CAFB 92

BARBARA

CAFB
RED 92

06 AUG 1992

DEPARTMENT OF THE AIR FORCE
HEADQUARTERS 27th FIGHTER WING (ACC)
CANNON AIR FORCE BASE, NEW MEXICO

AUG 1992
RECEIVED
HAZARDOUS WASTE
PROGRAM

27 CES/CD
111 Engineers Way
Cannon AFB NM 88103-5136

Mr Edward Horst
RCRA Program Manager
New Mexico Environment Department
P O Box 26110
1190 St Francis Drive
Santa Fe NM 87502

RE: Closure and Post Closure Plan for Landfill 5 Cell 3 - Revised July 1992

Dear Mr Horst

We request you review and comment on the amended Closure and Post Closure Plan for Landfill 5 Cell 3 - Revised July 1992 prior to your final approval.

Direct any questions to Capt Charles Granade or Mr Jim Richards at (505) 784-4639.

Sincerely

Lawrence Nygren

LAWRENCE NYGREN, GM-14
Deputy Base Civil Engineer

(Lord Nelle)

Global Power for America

CAFB

CLOSURE AND POST CLOSURE PLAN FOR LANDFILL CELL NO. 3 AT CANNON AIR FORCE BASE

REVISED

FINAL

October 1988

REVISED

July 1992

Submitted to:

Headquarters Tactical Air Command/DEEV
Langley Air Force Base, Virginia 23665

Submitted by:

Hazardous Materials Technical Center
The Dynamac Building
11140 Rockville Pike
Rockville, Maryland 20852

AUG 1992
RECEIVED
HAZARDOUS WASTE
PROGRAM

TABLE OF CONTENTS (Continued)

	Page
COMPLETION REPORT	28
Quality Assurance/Quality Control	30
Soil Cover Stabilization	35
Equipment Decontamination	37
Certification of Closure	37
Deed Recording	38
Survey Plat	38
POST CLOSURE MONITORING PLAN	38
Post Closure Groundwater Monitoring	39
Exhibit 1	44
Post Closure Cover Maintenance	47
Vent Monitoring	48
Inspection Schedule	48
REFERENCES	49
APPENDIX I	50
APPENDIX II	59
APPENDIX III	69

TABLE OF CONTENTS

	Page
INTRODUCTION	1
INSTALLATIONON DESCRIPTION AND HISTORY	1
SITE PHYSICAL DESCRIPTION	3
Meteorology	3
Hydrology	6
Soils	8
Clovis Soils	10
Mansker Soils	10
Potter Soils	10
WASTE DISPOSAL AND MIGRATION	14
Maximum Inventory of Waste	14
Core Sample Results	15
Groundwater Monitoring Results	15
FINAL CLOSURE	17
General Design of the Final Cover	18
Gas Venting	25
Surface Drainage Control	27
Security of the Closed Cell	27
ESTIMATED CONSTRUCTION SCHEDULE	28

LIST OF FIGURES

		Page
1.	Location Map of Cannon AFB, Melrose Bombing Range, and Conchas Lake Recreation Annex	2
2.	Site Map of Cannon AFB	4
3.	Topography and Surface Drainage Map	7
4.	Soils Map	9
4a.	Core Sample Location Map	16
5.	Cross Section of Final Cover.	18
5a.	Edge Detail of Final Cover	19
5b.	Juncture New Soil Cap to Existing Soil Cap	20
6.	Gas Vent Cross Section	26
7.	Monitoring Well Locations for Landfill No 5	40
8.	Typical Monitoring Well Installation	41

LIST OF TABLES

		Page
1.	Meteorologicall Data Summary for Cannon AFB, New Mexico . . .	5
2.	Permeability Coefficients.	12
3.	Hazardous Waste Inventory	14
4.	Core Analyses	15
5.	Estimated Construction Schedule	29
6.	Earth Work Construction Inspection Methods	31
7.	Quality Assurance/Quality Control Testing Procedures	32
8.	Seed Mix	36
9.	EPA Interim Primary Drinking Water Standards	47

DEFINITIONS

The acronyms used in this report and their corresponding definitions are:

AFB	Air Force Base
EID	Environmental Improvement Division of New Mexico Health and Environment Department
ppb	parts per billion
ppm	parts per million
SCS	Soil Conservation Service
TOC	Total Organic Carbon
TOX	Total Organic Halogen
USAF	United States Air Force
USCS	Unified Soil Classification System

INTRODUCTION

This amended approved closure plan is submitted in accordance with the requirements promulgated by the Federal Government and the State of New Mexico. Any facility that stores hazardous wastes for 90 days or longer, treats hazardous wastes, or disposes of such wastes must plan for eventual closure. This closure plan identifies all the steps that will be necessary to completely close Cell No. 3 at Landfill No. 5 at Cannon Air Force Base (CAFB). The owner or operator must complete closure activities in accordance with the submitted closure plan.

The amended closure plan is designed to conform to the closure performance standards (Section 206C, NMHWMR-4). Specifically, the plan ensures that Cell No. 3 will require minimum further maintenance and controls; provide long-term minimization of migration of liquids; promote drainage and minimize erosion and abrasion of the cover; accommodate settling and subsidence; and have a permeability less than or equal to the permeability of any bottom liner system of natural subsoils present. CAFB required that the cap be designed for ease of integration and tie-in to future landfill cell cap(s). The completed sanitary landfill site will be retained as grassland. All citations to the New Mexico Hazardous Waste Regulations are in reference to the New Mexico Hazardous Waste Management Regulation-6 (NMHWMR-6).

INSTALLATION DESCRIPTION AND HISTORY

Cannon AFB is located in Curry County, New Mexico, and is approximately 7 miles west of the city of Clovis (Figure 1). The base is situated on approximately 4,320 acres of land. Off-base facilities include the Melrose Bombing Range and the Conchas Lake Recreation Annex.

The history of Cannon AFB dates back to 1929, when Portair Field was established on the site. Portair Field was a civilian passenger terminal for early commercial transcontinental flights. In 1942, the Army Air Corps took control of the civilian airfield and it became known as the Clovis Army Air Base. In early 1945, the base was renamed Clovis Army Air Field. The installation was deactivated in May 1947. In July 1951, the base was assigned to the Tactical Air Command. The first units arrived in October of that year, but the airfield was formally reactivated in November 1951 as Clovis Air Force Base. In June 1957, the base became a permanent installation and was renamed Cannon Air Force Base in honor of the late General John K. Cannon, a former commander of the Tactical Air Command.

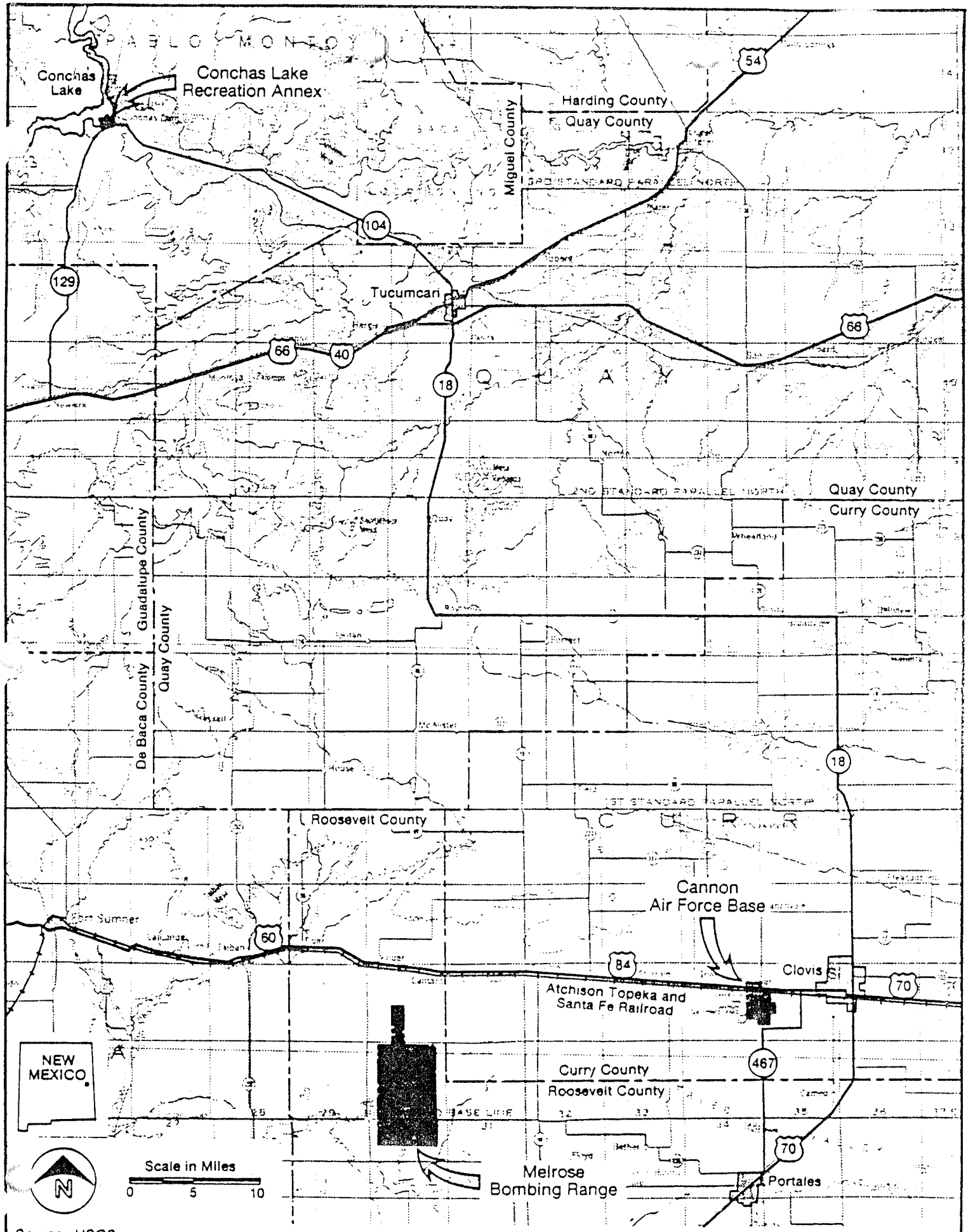

Source: USGS

FIGURE 1

Location Map of Cannon AFB, Melrose Bombing Range, and Conchas Lake Recreation Annex.

The primary mission of Cannon AFB has remained unchanged since 1965; that being to develop and maintain an F-111 fighter wing capable of day, night, and all-weather combat operations and to provide replacement training of combat aircrews for tactical organizations worldwide. Aircraft stationed at Cannon AFB since 1965 include the F-100 "Super Sabre" fighter jet, the F-111A, the F-111D, the F-111E, the F-111G, the F-111F, and the EF-111. The total work force at Cannon AFB is approximately 5,680. The major organizations at Cannon AFB are the 27th Support Group, the 27th Fighter Wing, and the 27th Medical Group.

SITE PHYSICAL DESCRIPTION

Cannon AFB is located in the Southern High Plains section of the Great Plains physiographic region. The Southern High Plains includes parts of eastern New Mexico and western Texas and covers approximately 32,000 square miles. The section is a plateau, bounded on the north and west by cliffs as much as 300 feet above the surrounding area. The southern and eastern boundaries are less well defined.

Cannon AFB is situated near the center of this plateau and is typified by flat, featureless terrain with almost no relief. Elevations at the base range from 4,327 feet above sea level at the northwest corner to approximately 4,260 feet above sea level at the southeast corner where Landfill No. 5 is located (Figure 2). The base slopes very gently downward toward the southeast corner. The only features of relief occurring on the base are playas, sand dunes, and small stream valleys.

METEOROLOGY

The area around Cannon AFB is semiarid. (See Table 1 for meteorological data) The annual precipitation is approximately 14 inches; at Clovis, 7 miles east of the base, it is approximately 16 inches.

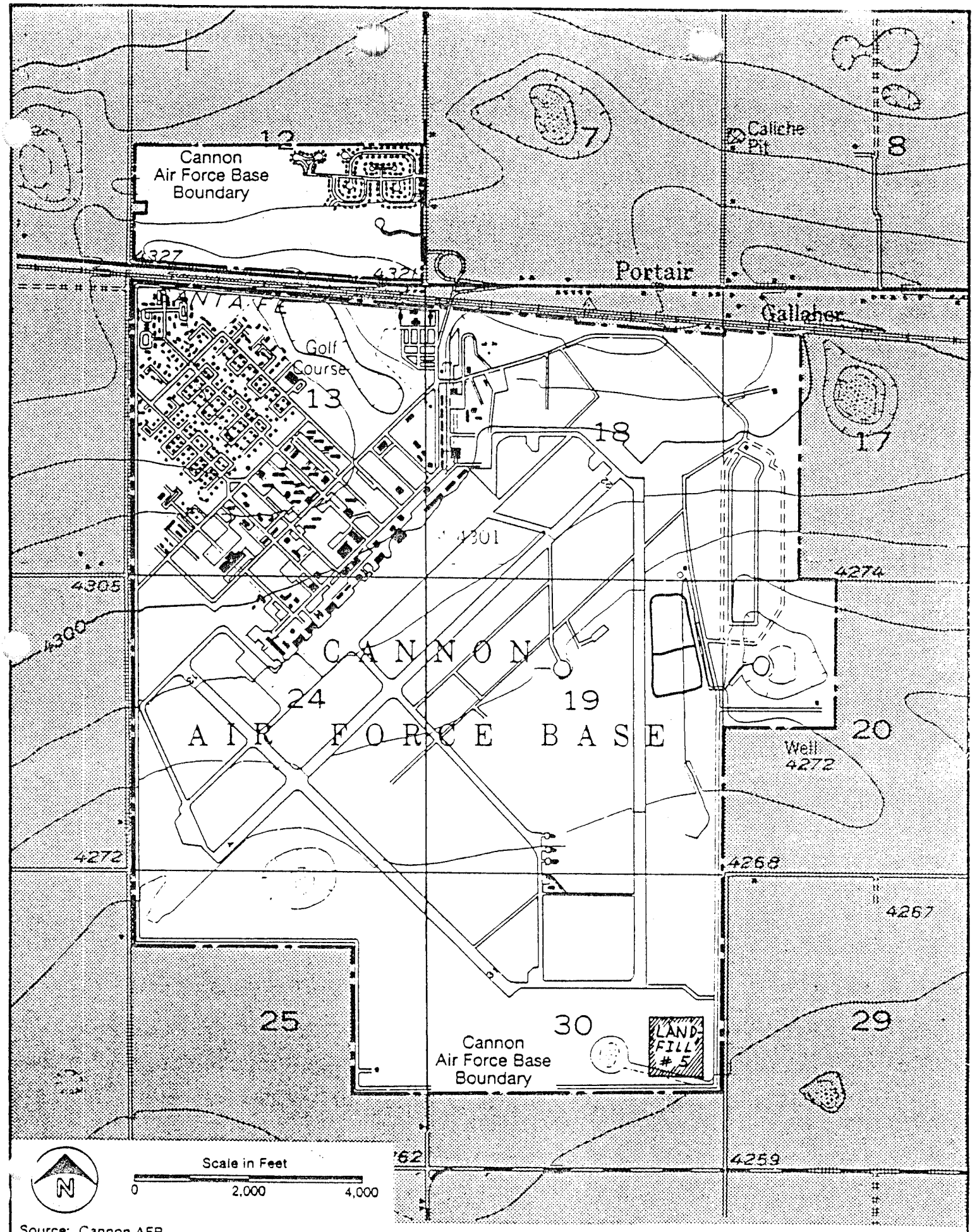

Source: Cannon AFB

FIGURE 2
Site Map of Cannon AFB.

TABLE 1. Meteorological Data Summary for Cannon AFB , N.M.

CB DATED OCT 81 OBSOLETE

PREPARED BY: USAFETAC
NOVEMBER 1986

STATION NAME : CANNON AFB NM
LOCATION : N34 23 W103 19

PERIOD: JAN 43-JUN 86 B
ELEV : 4295 FT

STN LTRS: KCVS
WSC NO: 722686

AWS CLIMATIC BRIEF

MONTH	TEMPERATURE (°F) MEAN DAILY MAX	MEAN DAILY MIN	MEAN MONTHLY	EXTREME MAX	EXTREME MIN	PRECIPITATION (IN) MONTHLY MEAN	MONTHLY MAX	MONTHLY MIN	MAX 24 HRS	SNOWFALL (IN) MONTHLY MEAN	MONTHLY MAX	MAX 24 HRS
JAN	53	25	39	77	-11	.4	1.4	.0	.9	3	12	8
FEB	54	28	42	80	1	.4	1.6	#	1.2	3	19	7
MAR	62	34	48	89	8	.5	2.4	#	1.3	2	12	7
APR	71	43	57	94	14	.7	2.1	.0	1.6	#	5	4
MAY	79	51	65	98	31	1.7	6.7	.1	2.0	#	1	1
JUN	83	61	74	106	42	2.2	5.5	#	2.5	0	0	0
JUL	90	65	78	105	55	2.7	11.4	.3	3.7	0	0	0
AUG	88	64	76	105	49	2.5	7.1	.2	4.8	0	0	0
SEP	81	57	69	100	29	1.7	5.9	#	3.0	0	0	0
OCT	71	46	59	95	22	1.5	6.2	.0	2.8	#	7	4
NOV	59	34	47	84	4	.5	2.1	#	1.7	2	12	5
DEC	51	27	39	77	-11	.4	1.9	#	.6	3	9	8
ANN	70	44	58	106	-11	15.2	11.4	.0	4.8	13	19	8
YR	39	39	39	39	39	36	36	36	36	36	36	36

MONTH	MEAN RELATIVE HUMIDITY (%) LST 07	LST 13	MEAN VAPOR PRESSURE (IN Hg)	MEAN DEW PT (°F)	MEAN PRESSURE ALTITUDE (FT) 99.95%	SURFACE WINDS PVLG DIRCTN (16 PTS)	SPEED MEAN (KT)	SPEED MAX (KT) **	MEAN CLOUD COVER (tenths)	MEAN NUMBER OF DAYS OCCURRENCE OF: PRECIP (IN) ≥ 0.01	PRECIP ≥ 0.5	SNOWFALL (IN) ≥ 0.1	SNOWFALL ≥ 1.0	THUNDERS	FOG VSBY < 7 MI	TEMPERATURE (°F) MAX ≥ 95	MAX ≥ 90	MIN ≤ 32	MIN ≤ 20
JAN	68	45	.11	21	4750	W	8	60	5	3	#	2	1	#	6	0	0	26	8
FEB	68	42	.13	24	4750	W	8	61	5	3	#	2	1	#	7	0	0	20	4
MAR	61	33	.14	26	4900	W	9	73	5	3	#	1	#	1	5	0	0	13	2
APR	56	30	.18	32	4850	W	9	59	5	3	#	#	#	3	5	0	#	3	#
MAY	62	34	.27	42	4750	W	8	65	5	5	1	#	0	7	5	#	3	#	0
JUN	63	36	.39	52	4600	S	7	64	5	7	1	0	0	9	3	5	14	0	0
JUL	61	35	.45	56	4400	S	6	66	5	8	2	0	0	10	3	6	17	0	0
AUG	68	40	.47	57	4400	S	5	69	5	8	1	0	0	10	4	4	15	0	0
SEP	68	41	.38	51	4550	S	6	70	5	6	1	0	0	4	6	1	5	#	0
OCT	67	41	.25	40	4650	W	7	64	4	5	1	#	#	2	6	#	#	1	0
NOV	68	41	.16	29	4750	W	7	59	5	3	#	1	1	1	5	0	0	12	1
DEC	66	43	.12	22	4800	W	8	67	5	3	#	2	1	#	6	0	0	25	5
ANN	65	38	.23	38	4700	W	7	73	5	57	7	8	4	47	61	16	54	100	20
YR	10	10	10	10	10	10	10	34	10	36	36	36	36	36	36	39	39	39	39

REMARKS: RUSSWO POR:
HOURLY OBS: JUL 76-JUN 86
SUMMARY OF DAY DATA: JAN 43-NOV 46, DEC 51-JUN 86

NOTE: * DATA NOT AVAILABLE # AMTS < UNITS SHOWN IN HEADING ** INSTANTANEOUS PEAK WINDS $ % CALM GRTR % PLVG. DRCTN @ BASED ON < FULL MONTHS

CAV FREQ (%)	HRS LST	JAN	FEB	MAR	APR	MAY	JUN	JUL	AUG	SEP	OCT	NOV	DEC	ANN	YR
CEILING LESS THAN 3000 FT AND/OR VISIBILITY LESS THAN 3 MI	00-02	17	18	11	8	13	6	3	4	12	14	15	14	11	
	03-05	17	20	15	10	19	9	5	7	14	17	18	14	14	
	06-08	18	22	16	14	22	13	7	8	18	18	19	16	16	
	09-11	16	19	13	10	11	9	4	7	15	15	17	14	13	
	12-14	13	15	10	6	6	4	1	3	8	11	12	13	9	
	15-17	11	11	8	4	4	1	1	2	6	7	9	10	6	
	18-20	12	12	7	4	4	2	1	1	6	9	10	12	7	
	21-23	14	14	9	5	7	3	2	2	7	12	14	13	9	
	ALL HRS	15	16	11	8	11	6	3	4	11	13	14	13	10	10
CEILING LESS THAN 1500 FT AND/OR VISIBILITY LESS THAN 3 MI	00-02	14	16	9	5	9	5	3	3	9	11	13	12	9	
	03-05	14	18	11	8	14	7	4	6	11	14	15	12	11	
	06-08	16	20	13	10	16	10	5	6	14	14	16	13	13	
	09-11	14	16	10	6	6	3	2	4	9	11	15	12	9	
	12-14	11	11	5	3	3	2	#	1	5	5	8	10	5	
	15-17	10	8	5	2	3	1	1	1	5	4	6	8	5	
	18-20	10	9	4	3	3	1	1	1	4	6	8	10	5	
	21-23	12	13	8	4	5	2	1	2	6	9	11	12	7	
	ALL HRS	13	14	8	5	7	4	2	3	8	9	12	11	8	10
CEILING LESS THAN 1000 FT AND/OR VISIBILITY LESS THAN 2 MI	00-32	12	14	7	4	7	4	2	2	7	10	11	10	8	
	03-05	13	16	9	6	10	5	3	4	8	12	13	10	9	
	06-08	14	18	10	7	10	6	3	4	11	12	14	11	10	
	09-11	10	12	7	4	4	2	1	2	6	7	11	10	6	
	12-14	8	7	4	2	1	1	#	1	3	3	5	7	4	
	15-17	7	6	3	2	1	#	1	1	4	3	4	7	3	
	18-20	8	8	3	2	2	1	#	1	3	4	6	8	4	
	21-23	10	11	6	4	3	1	1	2	4	8	9	10	6	
	ALL HRS	10	12	6	4	5	3	1	2	6	7	9	9	6	10
CEILING LESS THAN 200 FT AND/OR VISIBILITY LESS THAN 1/2 MI	00-02	4	6	2	1	1	#	0	#	#	3	2	3	2	
	03-05	4	5	2	1	1	#	#	1	1	3	3	3	2	
	06-08	4	6	2	1	#	0	#	#	#	3	4	3	2	
	09-11	2	2	#	#	0	0	0	0	0	1	2	2	1	
	12-14	1	1	#	1	0	0	0	0	#	#	1	1	#	
	15-17	1	1	#	#	0	0	#	0	0	0	#	#	#	
	18-20	1	2	#	#	0	0	0	#	0	#	1	1	#	
	21-23	3	4	1	#	0	0	0	#	0	1	2	2	1	
	ALL HRS	3	3	1	1	#	#	#	#	#	1	2	2	1	10

The annual lake evaporation used to estimate the annual evapotranspiration rate, is about 69 inches per year. Therefore, the annual net precipitation, which is the annual precipitation minus annual evapotranspiration, is approximately minus 55 inches per year. The wettest months are during the summer, and virtually all of the precipitation is due to thunderstorms. Winters in the Cannon AFB area are relatively dry, with about 13 inches of snow occurring. Due to the warm temperature (average daily maximum of 51°F, snow usually melts within a 24-hour period.

During the summer, temperatures are cooler than in the lower elevations to the east, and the air is drier. The dryness is due to the "Marfa" or "dewpoint" front, which usually lies to the east. Whenever this front moves to the west of Cannon AFB, the relative humidity rises dramatically. Frontal passages throughout the year are normally dry and only contribute to gusty winds. The wind usually blows from the west during the winter and shifts to the south as the temperatures rise in the spring and summer. In the spring the winds gust to approximately 25 knots.

HYDROLOGY

Due to the low precipitation, the high evapotranspiration, and low relief, the area around Cannon AFB has poorly developed surface drainage systems (Figure 3). Cannon AFB lies at the headwaters of the Brazos River. Little, if any, water that falls as rain or snow at Cannon AFB ever reaches the river. Most of the rain or snow is lost to evapotranspiration and shallow infiltration. Most of the surface drainage from Cannon AFB is directed through a series of ditches to a large playa near the intersection of the primary NE-SW runway and the NW-SE runway. However, surface drainage in the vicinity of the landfill flows to the south during episodes of heavy rainfall. The Phase I IRP report states that a low potential for contaminant migration exists at Cannon AFB due primarily to: (1) depth to groundwater, (2) low precipitation, (3) high evapotranspiration rate, and (4) the occurrence of a very low permeability caliche layer under most of the base. In other words, very little precipitation is available for infiltration, and what little does infiltrate is impeded first by the cap and then by the caliche before it begins a descent of over 200 feet to the aquifer system.

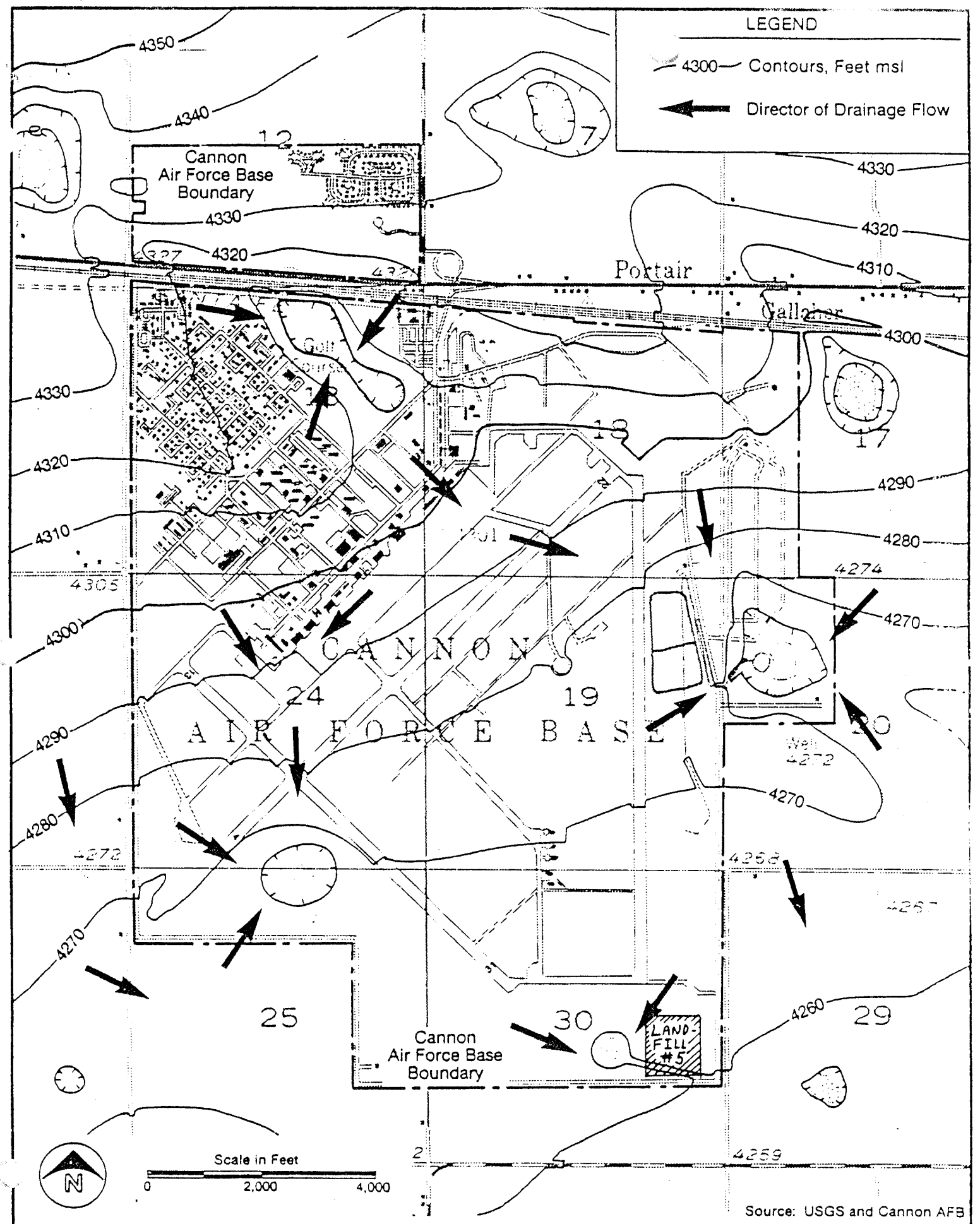

FIGURE 3
Topography and Surface Drainage Map.

Groundwater occurs under unconfined conditions at Cannon AFB. The base is underlaid by a portion of the High Plains Aquifer developed in the unconsolidated sediments of the Ogallala Formation. The High Plains Aquifer is the major and in some places the only source of water. The Ogallala Formation consists of clay, silt, fine to coarse grained sand, gravel, and caliche (calcium carbonate crusted soil). Groundwater quality within the Ogallala is acceptable for most uses. Water is typically hard and high in silica and fluoride. The potential for contamination of the High Plains Aquifer at Cannon AFB is low, because of the low rainfall, depth to water table, and the occurrence of a caliche layer of low permeability.

SOILS

The following is a general description of soils at Cannon AFB. (See Figure 4 for soils map.) The soils in question are Ab-Amarillo Fine Sandy Loam and Ag-Amarillo Loamy Fine Sand. The Amarillo loams resemble the Pullman loams with which they merged but the structure of their B horizon is not so strongly developed, and their profile is sandier throughout. Except that they are less sandy and their surface layers are thinner, the Amarillo loamy fine sands are like the Brownfield fine sands with which they merge. The Amarillo loamy fine sands are less sandy and are better developed structurally than the Springer loamy fine sands.

The Amarillo soils overlie a white chalky zone that begins at depths of 3 to 6 or more feet (but generally about 4 feet). From 40 to 70 percent of this zone is lime. The amount of lime in the profile above the chalky zone varies. The Amarillo fine sandy loams and loamy fine sands are deeper over calcareous material than the Amarillo loams. In places, the Amarillo loamy fine sands are noncalcareous to within 1 or 2 inches of the chalky zone. Some areas of the Amarillo loams are calcareous at a depth of about 18 inches.

The color of the surface soil ranges from brown to reddish brown in the Amarillo loams, through yellowish red in the loamy fine sands. The color of the subsoil ranges from dark reddish brown in some areas of Amarillo loam to yellowish red in the loamy fine sands.

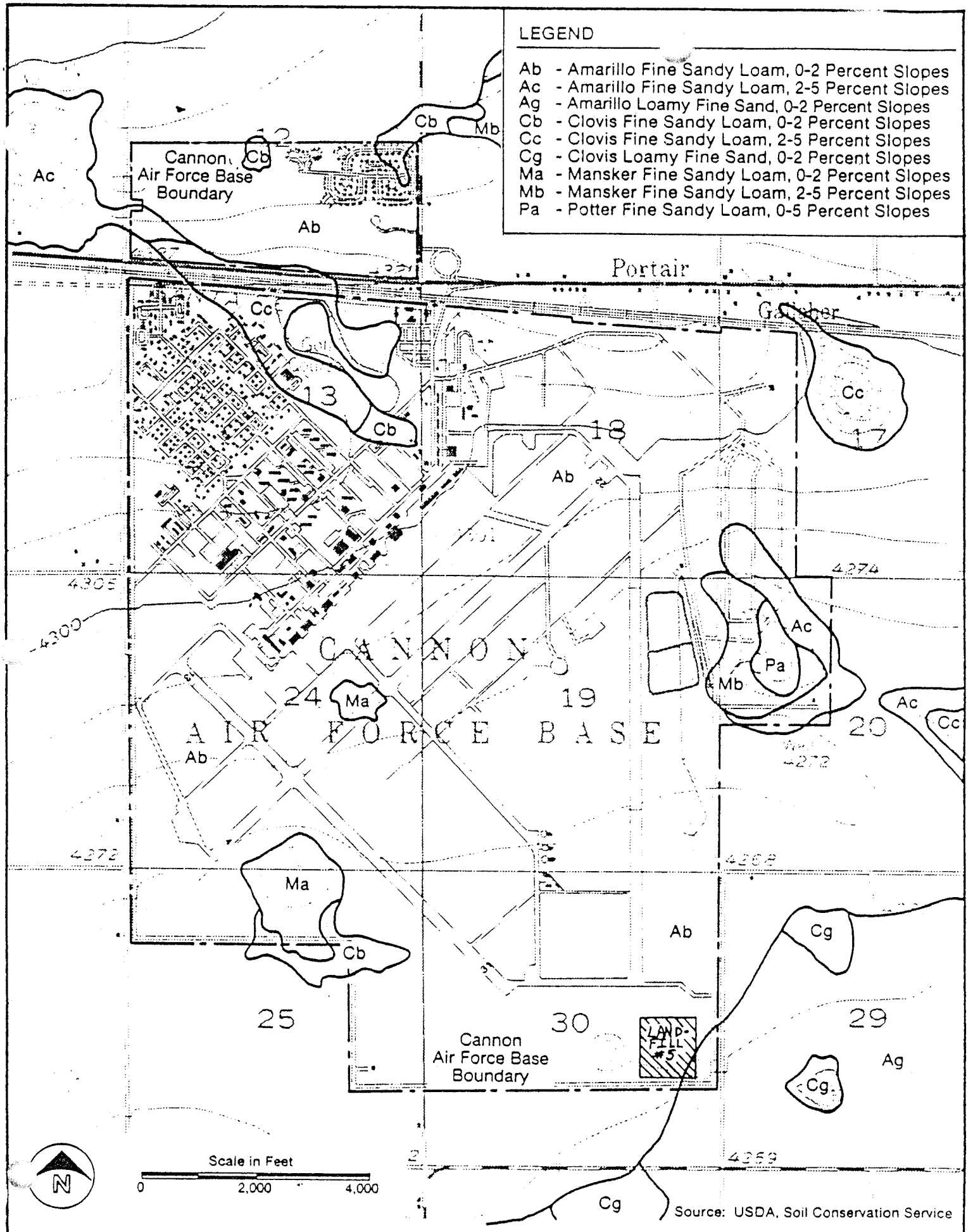

Source: USDA, Soil Conservation Service

FIGURE 4
Soils Map.

Amarillo soils cover over 90 percent of Cannon AFB. Typical permeabilities are moderate and range from 1 x 10-3 to 4 x 10 -4 cm/sec.

Other soil associations occurring at Cannon AFB, primarily in the vicinity of playa "lakes." include Clovis soils, Mansker soils, and Potter soils. Together, these soil types account for less than 10 percent of the area at Cannon AFB. The Soil Conservation Service (SCS) describes these soils as follows.

Clovis Soils. These soils generally occur in small areas within broader areas of Amarillo soils. They occupy the upper margins of many of the draws and playas. The Clovis soils are similar to the Amarillo, but the chalky zone occurs at shallower depths (16 to 36 inches) and in many places the profile is not so well-developed. In Curry County, the Clovis series is represented by three soil types: they are Clovis loam, Clovis fine sandy loam, and Clovis loamy fine sand. The Clovis loams resemble the thin solum phases of the Pullman loams except for weaker structural development in the B horizon.

Mansker Soils. Mansker soils are strongly calcareous. They normally occupy the slopes of draws and playas. However, small, nearly level to gently sloping areas occur within larger areas of Pullman, Amarillo, and Clovis soils. The Mansker soils are extensive throughout Curry County. They have formed where the upper part of some other soil has been lost through erosion, and the strongly calcareous substratum has been exposed. These soils show very little profile development.

Potter Soils. The Potter soils are shallow and strongly calcareous. They overlie hard, consolidated caliche. The degree of cementation in the caliche varies. In some places, the caliche resembles limestone; in others, it consists of lime-cemented pebbles and nodules. The material from which these soils developed was mainly weathered caliche, but it was intermixed with wind-deposited materials. The Potter soils occur throughout the county, normally in areas of less than 100 acres. In many places, they are closely associated with the Mansker soils.

Permeability of all three soil types is toward the lower end of the range typical for the Amarillo soils.

At Cannon AFB, the soil layer is underlaid by a fairly thick (approximately 25 feet) caliche layer which is part of the Ogallala Formation. This caliche varies in depth and thickness across the base. Geologic logs indicate that caliche occurs as shallow as 2 feet below the surface and is up to 54 feet in thickness. Observations made at the current landfill operation (not the cell addressed in this report) indicate that the top of the caliche layer is approximately 5 feet below the surface and becomes harder with depth. In fact, at a depth of approximately 15 feet, heavy-duty earth-moving equipment could not penetrate the caliche.

Although there are no specific boring data for the landfill area, boring data do exist for much of the base, especially the northwest region of the base. Some inferences about boring data at the landfill are made by the Department of the Air Force Tactical Air Command, Cannon AFB, New Mexico, in their publication entitled, "Sanitary Landfill Design, Construction and Operations" 15 December 1976:

"Site Soils. No soils tests have been made at the landfill site; however, the uniformity of soil conditions in the area and on the base allow for fairly accurate prediction of site soil conditions from other soil borings. Inspection of the existing 16-foot deep trench verifies the textural classification expected loamy fine sand or fine sandy loam underlain by sandy clay loam and light sandy clay loam with caliche pockets. Under the Unified Soil Classification System (USCS), the predominate soils are SC, CL, or combinations of them with some areas of SM or ML and a few pockets of GP, GL, GC. and caliche."

Of particular interest is the frequent occurrence of clay with intermittent layers of caliche in the boring profiles (uses Type CL). Examination of the profiles reveals that approximately 70 percent of the 191 borings taken show clay in the top 10 feet of the borings. The profile chart describes the clay as inorganic clay of low to medium elasticity. Table 2 shows that clays, especially colloidal clay, has the lowest permeability coefficient.

In the case of this particular landfill, the underlying material is caliche. While it is generally understood that caliche is very impermeable, a question arises as to the complete occlusive properties of large expanses of caliche.

Table 2. Permeability Coefficients

Typical Values of Permeability Coefficients

		PARTICLE SIZE RANGE				"EFFECTIVE" SIZE		PERMEABILITY COEFFICIENT—k		
		Inches		Millimeters						
		$D_{max.}$	D_{min}	D_{max}	D_{min}	D_{20} in.	D_{10} mm.	Ft./yr.	Ft./mo.	Cm./sec.
TURBULENT FLOW	Derrick STONE	120	36	—	—	48	—	100×10^6	100×10^5	100
	One-man STONE	12	4	—	—	6	—	30×10^6	30×10^5	30
	Clean, fine to coarse GRAVEL	3	1/4	80	10	1/2	—	10×10^6	10×10^5	10
	Fine, uniform GRAVEL	3/8	1/16	8	1.5	1/8	—	5×10^6	5×10^5	5
	Very coarse, clean, uniform SAND	1/8	1/32	3	0.8	1/16	—	3×10^6	3×10^5	3
LAMINAR FLOW	Uniform, coarse SAND	1/8	1/64	2	0.5	—	0.6	0.4×10^6	0.4×10^5	0.4
	Uniform, medium SAND	—	—	0.5	0.25	—	0.3	0.1×10^6	0.1×10^5	0.1
	Clean, well-graded SAND & GRAVEL	—	—	10	0.05	—	0.1	0.01×10^6	0.01×10^5	0.01
	Uniform, fine SAND	—	—	0.25	0.05	—	0.06	4000	400	40×10^{-4}
	Well-graded, silty SAND & GRAVEL	—	—	5	0.01	—	0.02	400	40	4×10^{-4}
	Silty SAND	—	—	2	0.005	—	0.01	100	10	10^{-4}
	Uniform SILT	—	—	0.05	0.005	—	0.006	50	5	0.5×10^{-4}
	Sandy CLAY	—	—	1.0	0.001	—	0.002	5	0.5	0.05×10^{-4}
	Silty CLAY	—	—	0.05	0.001	—	0.0015	1	0.1	0.01×10^{-4}
	CLAY (30 to 50% clay sizes)	—	—	0.05	0.0005	—	0.0008	0.1	0.01	0.001×10^{-4}
	Colloidal CLAY ($-2\mu \lesssim 50\%$)	—	—	0.01	10Å	—	40Å	0.001	10^{-4}	10^{-9}

On the basis of available data and field experience, the caliche occurring at the landfill site is probably young in nature and not entirely cemented. This would lead to the belief that the caliche formations here would exhibit some permeability, albeit low. While caliche in and of itself can be very impermeable. One would expect that a large expanse of the material would exhibit many fractures due to its relative hardness and brittle characteristics if mature, and incomplete cementation if young. Hence, while the material itself is very impermeable, these fractures would afford avenues for some percolation to occur.

The following is a description of caliche that is characteristic of the Central High Plains region of New Mexico where Cannon AFB is located which supports these conclusions (New Mexico State Highway Department. "Geology and Aggregate Resources, District 11," 1972).

> Many geologists believe that the Central High Plains and the Llano Estacado are universally underlaid by caliche deposits, but anyone who has had an occasion to explore this hypothesis on the working end of a jack-hammer will disagree, at least about the top 25 to 50 feet. Nevertheless, exposures along the escarpment indicate that some form of caliche does exist below a large part of these surfaces. The stages of development of these caliche profiles will vary from very youthful to late in maturity. As previously mentioned, some of the profiles may be over one million years old. Some of the older profiles have undergone attacks from solution and weathering and, therefore can be expected to be extremely discontinuous across the plain. Although these surfaces have remained quite stable for hundreds of thousands of years, aggradation and degradiation have continued at a slow steady pace. The result, considering the climatic fluctuations of the past one million years has been degradation and recementation of the profiles on the windward and uphill side of the plains and aggradation on the lee side of the plains. The rock-house type structure being more common in older profiles, and lamination more common in younger profiles. Perhaps this helps explain the variations in soundness, loss, and Los Angeles abrasion test values from different locations across the plains or even within a local pit area."

WASTE DISPOSAL AND MIGRATION

MAXIMUM INVENTORY OF WASTE

Landfill No. 5 began operation in 1968 and is in current use. The site is located in the southeast corner of the base and covers approximately 30 acres. Cell No. 3, the specific cell for which this closure plan is applicable, was closed in 1981. The cell covers an area of approximate dimensions 800 feet long by 50 feet wide.

Materials received at this landfill in 1981 are similar to those received at the former base landfills and include waste oils and solvents, paints, paint removers and thinners, pesticide containers, empty cans, and general construction debris. Materials from drums were generally deposited on absorbent materials placed in the cell. The drums were then reclaimed for reuse.

From 1968 to about 1972, wastes were burned and then buried in cells. Since 1972, the standard procedure has been direct burial of the wastes in cells. There are 11 covered cells at the site. No volatile organics were found in Cell No. 3. The estimated maximum inventory of hazardous waste in Cell No. 3 is shown in Table 3.

Table 3. Hazardous Waste Inventory

Hazardous Waste	Percent	Amount in Pounds
Methyl ethyl ketone	39.6	3,564
Toluene	43.4	3,906
Methyl isobutyl ketone	10.4	936
Cyclohexanone	2.4	216
Xylene	1.6	144
Ethylene glycol monobutyl ether	1.6	144
Lead	0.6	54
Chromate	0.4	36

CORE SAMPLE RESULTS

Two 9-inch diameter cores of 40-foot depth were removed from the landfill cell on January 22, 1985. (Figure 4a) Six samples from each core depths of 10, 15, 20, 25, 30, and 40 feet were analyzed for chromium, lead, arsenic, tin, mercury, and volatile organics. The metals analyses were accomplished by nitric acid digestion/atomic adsorption spectroscopy and the volatile organics were analyzed using gas chromatograph mass spectrometry. Table 4 summarizes the composite results of these analyses.

TABLE 4. Core Analyses

Constituent	Concentration (Dpm)	Detection Limit (ppm)
Chromium	14 - 36	0.005
Lead	0.2 - 10.5	0.001
Arsenic	3.70 - 9.61	0.002
Tin	0.5 - 2.0	0.002
Mercury	0.04 - 0.68	0.002
Volatile Organics	0.01	0.01

The metal levels appear to be high in these analytical results, but this is not significant because the lowest level of the value ranges are reached at the 40-foot depth. Very little would be available to groundwater which is 200 feet deeper still.

GROUNDWATER MONITORING RESULTS

Four groundwater monitoring wells (A,B,C,and D) were installed near the landfill cell during December 1984 and January 1985. Two additional wells (I and J) were installed in 1988; and the final two wells (L and M) were installed in 1992. Wells A, I, L and M are currently being monitored. Monitoring of wells A,B,C, and D began with first-quarter samples taken on January 25, 1985. For indicator parameters (pH, specific conductance, TOC, and TOX), heavy metals, pesticides, endrin, lindane, methoxychlor, toxaphene, 2, 4-D and 2, 4, 5-TP-Silvex, radioactivity, coliform bacteria, chloride, iron, manganese, phenols, sodium, and sulfate

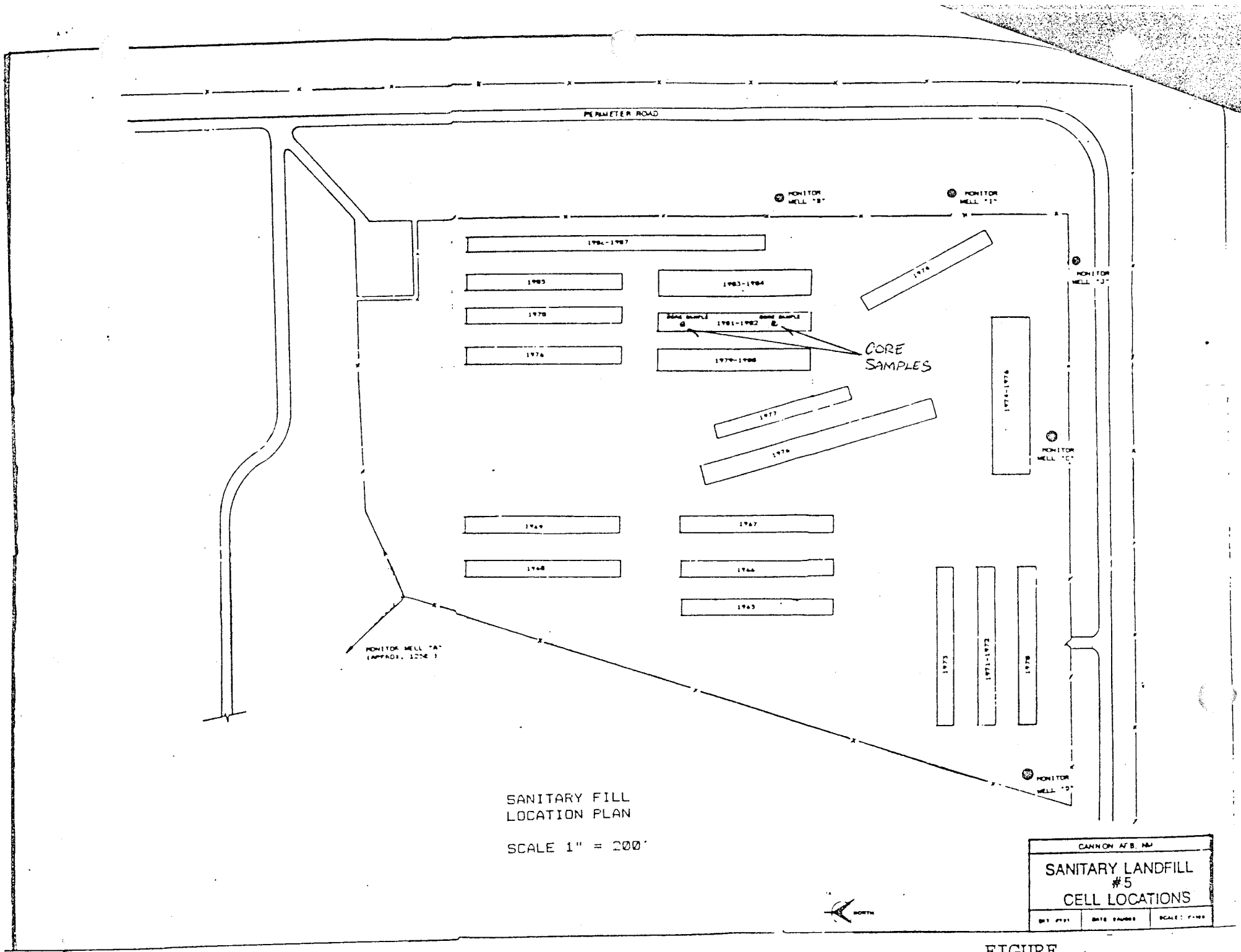
PERIMETER ROAD
MONITOR WELL "B"
MONITOR WELL "I"
MONITOR WELL "J"
MONITOR WELL "C"
MONITOR WELL "D"
MONITOR WELL "A"
1984-1987
1985
1983-1984
1978
1981-1982
1976
1979-1980
1974
1977
1976
1969-1971
1969
1967
1968
1966
1963
1973
1971-1972
1970
CORE SAMPLES
SANITARY FILL
LOCATION PLAN
SCALE 1" = 200'
NORTH
CANNON AFB, NM
SANITARY LANDFILL
#5
CELL LOCATIONS

FIGURE -4 a

the sample analyses show that there are no significant increases over background levels of groundwater constituents evidenced in the three downgradient wells compared to the upgradient well. Preliminary examination of data from analyses of second quarter groundwater samples received by the laboratory on April 30, 1985, indicates that there continues to be no significant increase over background levels of groundwater constituents in the vicinity of landfill Cell No. 3. (See post closure groundwater monitoring section for details about monitoring well locations.)

FINAL CLOSURE

Final closure of the landfill cell will involve covering it with a combination Sodium Bentonite clay liner, high density polyethylene (HDPE) liner,and soil protective cover. The combination cover will keep liquids from reaching the cell contents, thus minimizing leachate generation and also will prevent any wastes present in the cell from coming in contact with the above-ground environment. A post closure maintenance inspection program will guarantee the integrity of the protective cover.

A discussion of the general design of the final protective cover follows. Figures 5, 5a, 5b illustrate the proposed components of the cover structure for Cell No. 3 in a cross-sectional view.

GENERAL DESIGN OF THE FINAL COVER

The final cover was chosen with the following considerations:

(1) Long-term minimization of liquid migration through the closed landfill;

(2) Minimum maintenance requirements;

(3) Promotion of drainage and minimization of cover erosion;

(4) Accommodation of settling and subsidence; and

(5) Obtaining a cover that will act as seal against passage of fluids.

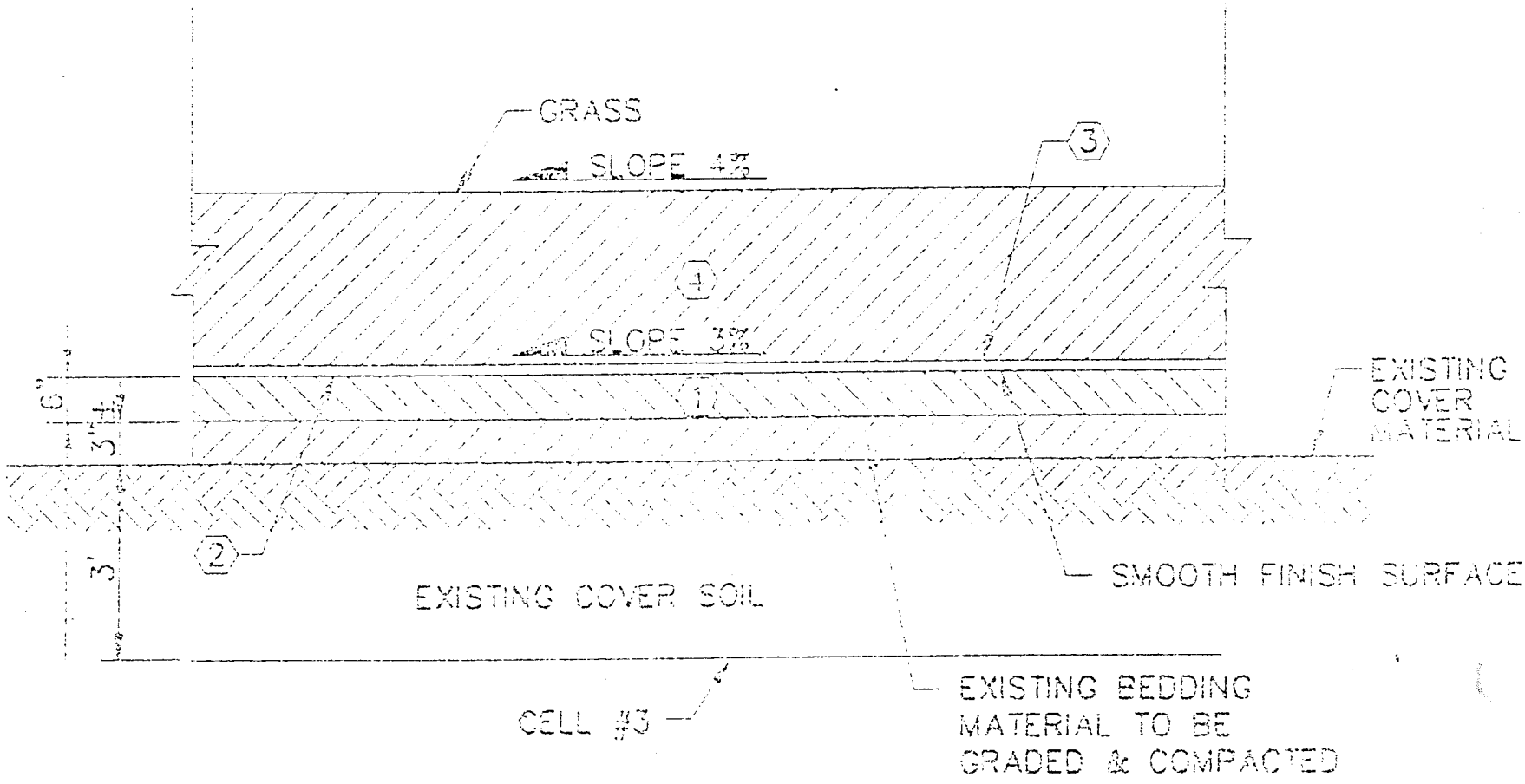

TYPICAL CROSS SECTION A

N.T.S.

C3|C5

Figure 5

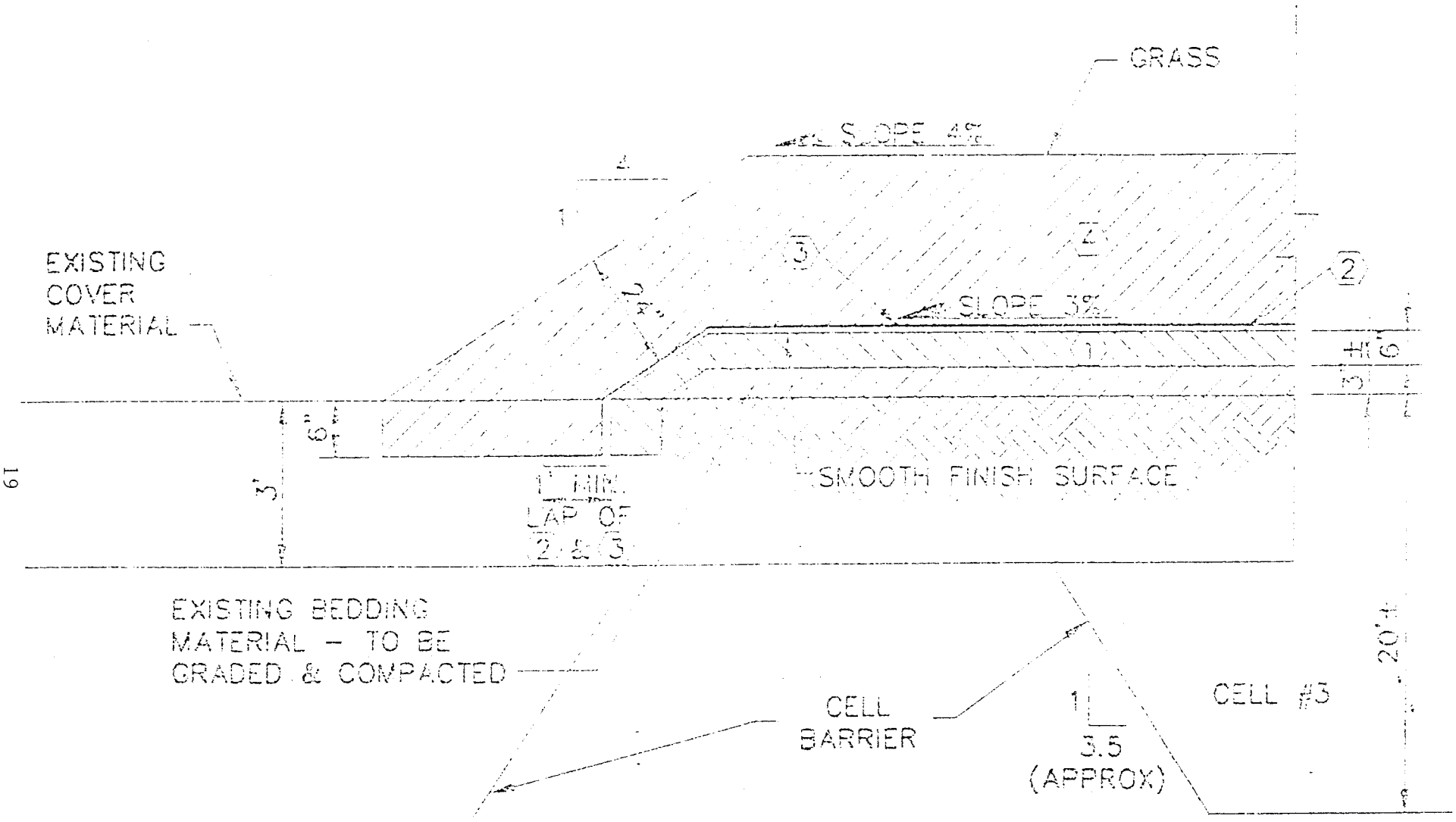

TYPICAL EDGE DETAIL (B) C3|C5

N.T.S.

Figure 5a

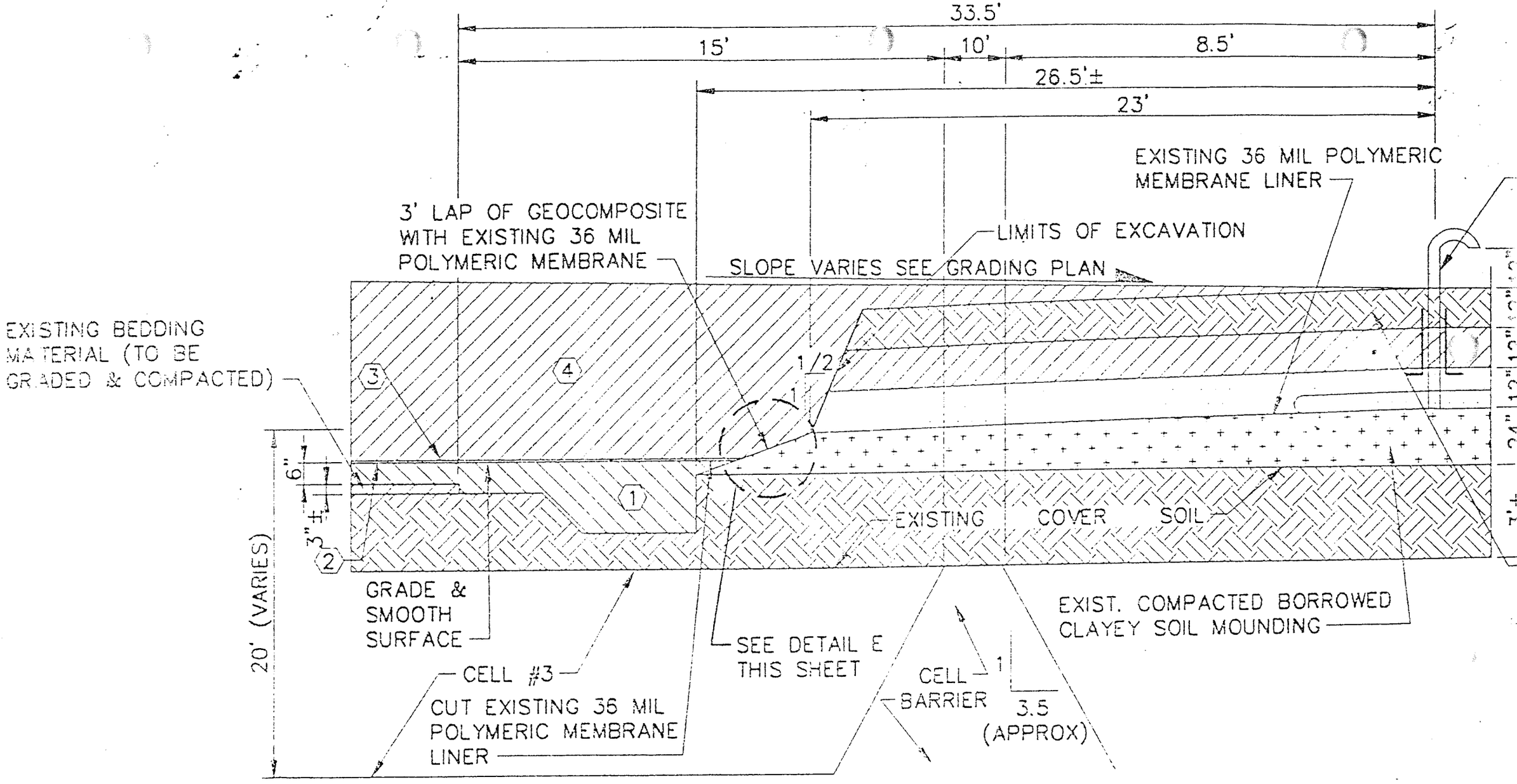

JUNCTURE NEW SOIL CAP TO EXISTING SOIL CAP

C

N.T.S.

C3C5

Figure 5b

The following components will constitute the cover system planned for landfill cell No. 3:

- Buffer layer
- Bedding layer
- Gas Vent Sand layer
- Geotextite filter
- Bentonite layer
- High Density Polythylene Liner (HDPE)
- Compacted protective layer with vegetative cover.
- Horizontal vent pipe.
- Barbed wire fence

A general description of each of the aforementioned components and the function of each component is presented here. Specific design plans and detailed specifications are presented in the document." Specifications for Landfill # 5 Cell # 3 Soil Cap July 92 " located in Appendix III.

Presently, a buffer layer (existing 2-feet-thick cap) exists immediately above the actual waste and serves to protect the geocomposite-soil cap (to be installed above the buffer layer from penetration by protruding objects in the landfill by minimizing the effects of settling on the geocomposite-soil cap. In addition, the buffer layer is usually more porous, so that gases can migrate through it and so that siltation from the bedding and sand layers will be contained in the upper part of the buffer. In the case of this landfill, where the climate is semiarid and the net precipitation is quite low (minus 55 in/yr) and a HDPE membrane liner will be present, no appreciable siltation from the bedding layer is anticipated to occur.

The construction of the buffer has been completed for about 10 years. The document by the Department of the Air Force, Tactical Air Command, Cannon AFB, New Mexico, entitled "Sanitary Landfill -- Design, Construction, and Operation," 15 December 1976, indicates that this buffer layer is constructed

of soils from the cell excavation. The document specifies a minimum thickness of 2 feet for this layer and calls for it to be compacted in four 6-inch lifts. During a site visit in March 1985, it was observed that the site was "criss- crossed" with bulldozer tracks, implying that this cover was "tracked in" for compaction, as per the regulation.

Settling and subsidence typically occur immediately following the final cover of a landfill. The rate of this settling is fastest in the first few years following final cover and slows to a minimal rate after 5 years or so. Total settling might amount from 5 to 50 percent of a landfill's height, depending on such factors as the depth of the fill. composition of the waste, and the climate and groundwater characteristics. At this site, the depth of the fill is estimated at 25 feet. The waste consists of construction/demolition debris and hazardous wastes consisting mainly of paints and solvents (noncontainerized). The semiarid climate and very deep aquifer system would suggest that decomposition of organics would occur rather slowly after the first several years.

The relatively small volume of compacted waste in the landfill, placed in a shallow configuration of maximum depth of 25 feet, would also suggest a low total settling of the fill. In support of this contention is the fact that no cracks, craters. or depressions were observed during the site visit. Therefore, it is anticipated that little additional settling will occur in the fuure and that the existing buffer layer is adequate.

The planned final cover will consist of the following components to be installed above the buffer layer:

- A one eighth thick Sodium Bentonite clay liner on top of and in direct contact with the smooth finished surface of the cell No. 3 non - woven fabric. The Sodium Bentonite liner will extend a distance of 7 feet from the edge of the cell in all directions to a perimeter anchor trench.The maximum permeability of the clay layer will be 10-9 cm per sec.

- A non-woven geotextile filter fabric will cover the compacted gas vent layer to prevent mixing of the Sodium Bentonite with the filter sand. The geotextile filter has the capacity to vent any gases that may be generated in Cell No. 3. The filter fabric will have 5% slack for any subsidence and will be anchored in the anchor trench. Documentation in the form of a manufacturer's warranty on the geotextile filter fabric, indicating that it has 30 years of excellent aging and weathering characteristics will be provided to the Contracting Officer by the Contractor.

- A layer of filter sand below the geotextile filter and in contact with the bedding soil. The filter sand serves to allow gases to properly vent. The filter sand will be of 6 inches depth at the cell No. 3 centerline and slope toward the perimeter anchor trench reinforced cross-sectionally. The minimum thickness of the sand layer at the inside edge of the anchor trench will be 6 inches. The minimum saturated hydraulic conductivity of the emplaced sand layer will be approximately 10-2 cm per sec.

- A 40 mil high density polyethylene membrane liner of low permeability (10-12 cm/sec) installed on top of the Sodium Bentonite clay liner, and extending a distance of approximately 7 feet from the edge of the cell to a anchor trench. Any percolation that reaches the membrane liner surface from above will be shed to beyond the perimeter of the cell.

- Documentation in the form of a manufacturing warranty on the HDPE membrane liner, indicating that it has 30 years of excellent aging and weathering characteristic will be provided to the Contracting Officer by the Contractor.

- The Installation Contractor will certify that the final cover system was constructed according to the designs and specifications and industrial standards and is free of any damages, leaks, and other defects to provide a leak proof cover system and the quality of construction and workmanship is guaranteed.

- A compacted protective cover of clayey sand and/or sandy clay borrow, installed on top of the membrane liner, and extending a distance of 7 feet from the edge of the cell in all directions, and terminating at the perimeter trench. The protective cover will be a minimum of 24 inches deep at Cell No. 3 centerline and slope (crosssectionally) to the perimeter slide slopes. The slope of the compacted protective cover surface is of a suitable gradient to allow diversion of rainwater and surface runoff away from cell No. 3 in a reasonable manner toward the perimeter side slopes. The designed shallow slopes to the cover system also will reduce the surface area exposed to high winds.

The protective cover material will be screened through a one-inch or smaller screen to remove foreign objects and large rocks which may puncture or abrade the membrane liner. A visual check of the emplacement will be made to assure effective removal.

The protective cover will preserve the integrity of the membrane liner by preventing direct exposure of the liner to ultraviolet solar radiation and will deter liner wear due to weather and direct physical contact. The protective cover will be graded so that a constant level is maintained along the north-south axis of the cell. The protective cover will extend 12 feet beyond the edges of cell No. 3.

A supply of common borrow identical in characteristics to the common borrow installed on top of the membrane liner will be kept in reserve in the event of future cover repair activities. The common borrow supply should be maintained in a protected pile in a convenient location outside of the Cell No. 3 perimeter fence.

- A 4-inch diameter perforated PVC horizontal vent pipe installed at the bottom of the filter sand layer residing under the geotextile filter, approximately 3 inches above the surface of Cell No. 3. The PVC vent pipe will be wrapped with geotextile fabric and will be oriented along the length of the centerline of Cell No. 3. The horizontal vent pipe will collect any gases permeating through the layer of filter sand.

- Three 4-inch diameter PVC vertical vent pipes (with vent caps) 200 feet apart from each other, will extend up from the horizontal vent pipe through the filter sand, penetrating the membrane liner and through the protective cover, finally venting to the ambient atmosphere at a height of 12 inches above cover crown. A leakproof seal boot between the vent pipes and the membrane liner will ensure continuity in liner protection integrity.

- A 24 inch by 6 inch deep perimeter anchor trench to anchor the geotextile filter and HDPE/Bentonite membrane liner under a protective common borrow cover. The inside edge of the anchor trench will be a minimum of 7 feet from the edge of the cell.

- A 4-strand barbed wire fence with a metal panel gate will protect the perimeter of Cell No. 3 from nearby activities on adjacent cells. The fence will be located 20 feet from the edge of Cell No. 3. The fence will withstand the stress of high winds, tumble weeds, and blowing sand and will require no maintenance.

- A temporary barricade will be established 2 feet and 6 inches away from the centerline of space between Cell No. 3 and adjoining Cells No. 2 and No. 4. The temporary barricade will prevent damage to adjoining cells by delineating a work zone for equipment used in capping cell No. 3. The temporary barricade will be removed once the 4-strand barbed wire is constructed.

- To prevent any impact on the adjacent cells, all designs have been kept within 2 feet of the mid-point of the distance between Cell No. 3 and the adjacent cells.

GAS VENTING

Cell No. 3 has received solvents, paints, paint removers, and thinners which, after closure, could volatilize and release gases. Core analyses (Table 4) detected <0.01 ppm of volatile organics and no organic solvents in cell No. 3 core samples. Complete volatilization may have occurred in the 11 years since 1981; however, the general design of the final protective cover allows for venting of any potential gases, through the use of 4 gas vents (Figure 6).

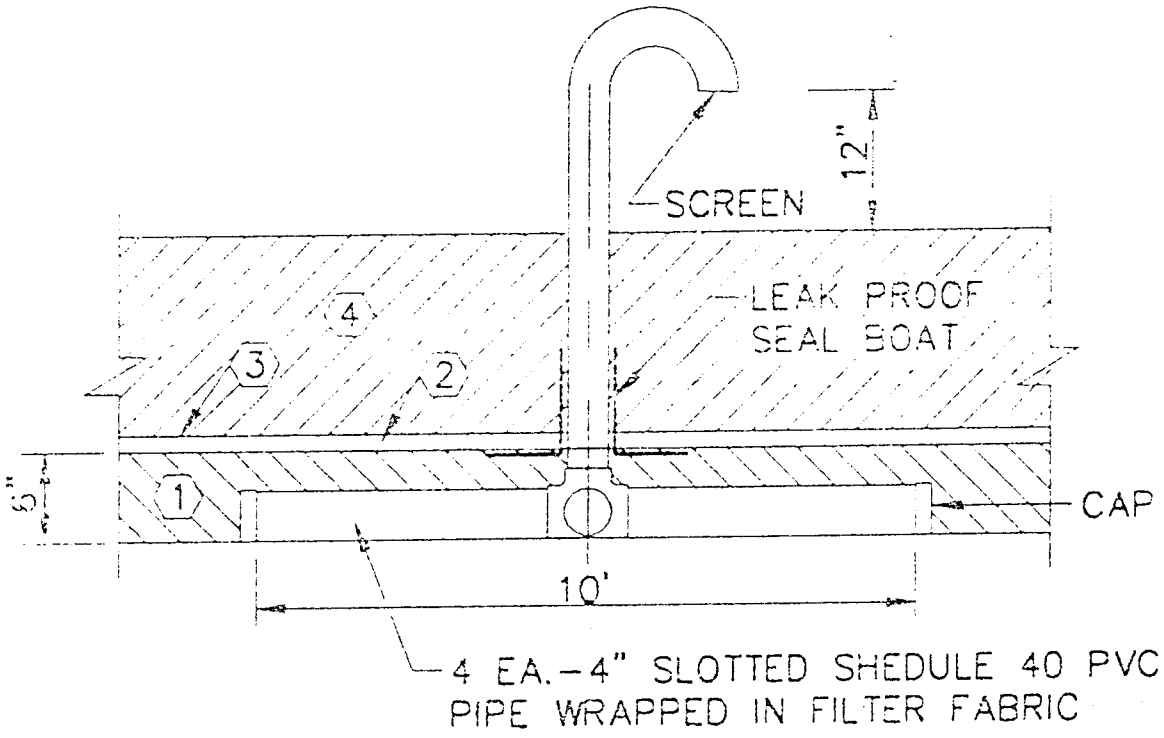

GAS VENT DETAIL D

N.T.S.

C2 C5

Figure 6

SURFACE DRAINAGE CONTROL

Drainage of surface rainwater runoff shall be accomplished so that infiltration is minimized between cell Nos. 3 and 2 and between cell Nos. 3 and 4. To effect positive sheet flow drainage in these areas without causing soil erosion and subsequent undermining/failure of the seal created by the protective soil cover, a 3-4% slope for the cover and a 4:1 (horizontal/vertical) side slope are provided.

SECURITY OF THE CLOSED CELL

Security for the closed cell will follow the rules governing security for the working portion of the landfill. Access to the site shall be controlled by a lockable entry gate attached to a permanently anchored 4-strand barbed wire fence surrounding the perimeter of the landfill cell, a distance of 20 feet from the edge of Cell No. 3. A placard that identifies the landfill cell shall be permanently attached to the fence. The gate shall be closed and locked when an operator is not on duty. The following access categories shall be utilized:

1. Unlimited Entry--unlimited entry to the landfill site shall be authorized for landfill operators.

2. Limited Entry--personnel with authorized limited entry shall make their presence known to the landfill operator before conducting business on the site.

3. Restricted Entry-personnel with authorized restricted entry shall make their presence known to and be accompanied by the landfill operator while on the site.

4. Unauthorized Entry--access to the site by persons other than those listed above is not authorized and shall be prohibited.

The fence, gate, and placard shall be durable enough to last the duration of the post closure period and shall remain in place throughout this time.

No future use is planned or allowed. The base master plan will restrict subject to Civil Engineering and Base Commander approval.

The placard with the legend, "Danger-Unauthorized Personnel Keep Out" will be posted at each entrance to the facility. These warning signs will also be posted at intervals no greater than 100 feet apart on the fence around the closed unit. The legend will be written in English and Spanish and will be legible from a distance of at least 25 feet.

ESTIMATED CONSTRUCTION SCHEDULE

Table 5 presents an estimated construction schedule for the closure of Cell No. 3 of Landfill Area 5. A detailed description of each of the activities listed in Table 5 is presented in the document, "Specifications for Landfill #5 Cell #3 Soil Cap " July 1992.

COMPLETION REPORT

Upon completion of the closure, the Commander will submit, in support of the Certification of Closure, the following information:

1. A certified survey showing the location of the cap.

2 A copy of the QA/QC report.

TABLE 5. Estimated Construction Schedule

Cannon Force Base
Amended Closure of
Cell No. 3 of Landfill Area 5

Activity	Completion Date (Weeks)
o Contract Award	A
o Preconstruction Conference	A + 2
o Submit QA/QC Plan to EID	A + 3
o Review and Approve Contractor's Submittals	A + 4
o Onsite Operations Begin	A + 4
o Complete Mobilization and Construction of Contractor's Facilities	A + 6
o Subgrade Preparation	A + 7
o Bedding Soil	A + 8
o Review and Approve Layout Pattern for Liner and Fabric and the Materials for Final Cover System	A + 10
o Filter Fabric, Sand Filter, and Venting System	A + 13
o Polymeric Membrane and Protective Layer	A + 18
o Turfing	A + 19
o Fence and Caution Sign	A + 20
o Demobilization and Project Closeout	A + 21

NOTE: A = date of contract award

QUALITY ASSURANCE/QUALITY CONTROL

The Commander will appoint an individual to oversee the quality control effort and report directly to the Commander upon closure completion.

During construction the inspection procedures listed in Table 6 will be conducted to document the acceptability of installation procedures.

In order to ensure that the final cover is constructed per design specifications. The following parameters will be closely observed and followed:

- Construction of the final cover will use the same soil material, design, equipment, and procedures as specified in the specifications.
- All applicable parts of the QA/QC test requirements will be followed precisely to monitor and document cap construction and testing. (Table 7)

Table 6. Earth Work Construction Inspection Methods

Factor To Be Inspected	Inspection Methods	Test Method Reference
Coverage	Observation	NA
Thickness	Surveying: Measurement	NA
Clod size	Observation	NA
Tying together of lifts	Observation	NA
Slope	Surveying	
Installation of protective cover	Observation	NA
Soil type (index properties)	Particle size analysis Atterberg limits Classification of soils	ASTM D422-63 ASTM D4318-87 ASTMD2487-85
Moisture-density relation	Modified proctor (Bedding & Core soil)	ASTM D1557-7B
	Maximum Index Density (Gas vent sand layer)	ASTM D4253-83

TABLE 7. Quality Assurance/Quality Control Testing Procedures

	Moisture/Density Test Frequency
Mass earthworks (embankments, dikes)	1 per 10,000 ft /lift
Hand-compacted Backfill	1 per 100 cubic yard
Minimum per Shift (mass earthwork)	1
Doubtful Areas (inspector's discretion)	1

Inspection personnel will monitor and thoroughly document construction of the cap. The cap documentation will be extremely important because it will verify all data involved in facility construction and provide a complete description of the construction equipment and procedures used during the construction of the final cover.

As construction of the final cover proceeds, all procedures shall be documented in a dedicated construction/inspection record book. This will ensure that the final cover meets or exceeds the design criteria, including the use of the optimal materials, equipment and construction methodologies. During construction of the final cover, the following inspection procedures will be used to ensure that it is constructed according to specifications:

- Removal of roots, rocks, rubbish, or off-spec soil from the cover materials
- Identification of changes in soil characteristics necessitating a change in construction specifications
- Adequate spreading of materials to obtain complete coverage and the specified loose lift thickness
- Adequate clod size reduction of cover material
- Adequate spreading and incorporation of any certified amendments to obtain the specified amount uniformly in the amended cover material
- Adequate spreading and incorporation of water to obtain full penetration through clods and uniform distribution of the specified water content
- Procedures to be followed to adjust the soil moisture content in the event of a significant prolonged rain during construction
- Prevention of significant water loss before and after compaction
- Use of compaction equipment of the same type, configuration, and weight
- Use of the same equipment speed and number of equipment passes for compaction
- Uniformity of coverage by compaction equipment, especially at fill edges, in equipment turn-around areas, and at the tops and bottoms of slopes

- Consistent achievement of the specified soil density/water content/compactive effort throughout each completed lift

- Use of methods sufficient to tie the soil lifts together

- Achievement of sufficient soil strength to maintain stable sidewalls and to supply a stable base for supporting overlying materials

- Application of water to prevent desiccation of soil material between the installation of lifts or after completion of the cover (where necessary)

- Prevention of accidental damage of installed portions of the cover by equipment traffic

Climatic conditions will also be monitored to be sure that they do not adversely affect the compaction process and cause variabilities in the permeation rate of the final cover.

As detailed in this section, a rigorous construction QA/QC program will be conducted to ensure that the following non-specification conditions are prevented or, if they should inadvertently occur, are detected and corrected:

- Regions of use of unspecified materials, inadequate moisture control, insufficient compactive effort, failure to fill test holes properly or construction during periods of freezing temperature

- Less-than-specified thickness or coverage from failure to observe, monitor, and control soil placement and compaction operations

- Partings between lifts from failure to scarify and control moisture in adjacent lifts

- Leaks around designed cover penetrations resulting from improper sealing and compaction

- Erosion or desiccation from failure to provide protective cover when construction is interrupted or after cap completion

The low permeability Sodium Bentonite liner will be inspected for cracks, holes, defects, or any other features that may increase its field permeability. All defective areas will be removed and repaired. If the underlying foundation is defective (soft or wet), then this material will also be removed and recompacted. Special attention will be paid to the final inspections of the side slopes and bottom slopes, cap coverage, and cap thickness. The completed cap will be protected from desiccation, erosion, and freezing immediately following completion of the uppermost lift.

All seams made in the synthetic liner will be constructed in accordance with the manufacturer's specifications.

Upon completion of the closure, a written report will be prepared and submitted to the Commander and the EID. This report will summarize the QA/QC plan and report fully all observations and accumulated data.

SOIL COVER STABILIZATION

The final phase of closure consists of placing a compacted surface for the cap and seeding the topsoil with a native grass seed mixture (see Table 8). The soil mantle will average a minimum of 24 inches in thickness to allow for some erosional loss during the establishment of the vegetation. The mantle's composition will be that of the local soils described in the soil characterization.

The soil mantle will be applied uniformly with compaction and will be graded to approximately 3% (See Appendix I) across the cap axis to all sides. A tiller will be used to pulverize the clods and smooth the surface to a 4-inch depth and a moderately fluffed composition.

Soil pH, nitrogen, organic matter, phosphorus and potassium will be tested to determine the type and quantity of fertilizer necessary for the soil to sustain the vegetative cover.

The vegetation shall consist of a mixture of perennial grasses that readily thrive in this climate and need little maintenance.

If closure commences within the first six months of 1993, then seeding can occur during the proper season. The seeds will be planted by drilling them at the proper density to ensure a thick vegetative cover from the first growth.

TABLE 8. Seed Mix

	Mixture % by weight
BLUE GRAMA, Bouteloua gracilis 'Lovington' or 'Hachita'	17
SIDEOATS GRAMA, Bouleloua curtipendula 'El Reno'	35
BUFFALO GRASS, Buchloe dactyloides 'Texoka'	35
BERMUDA GRASS, Cynodon dactylon	9
ALKALI SACATON, Sporbolus airoides	4

A straw mulch will be evenly applied to help retain moisture, prevent erosion, and protect the vegetation until it matures.

Establishment of the vegetative cover will be monitored to ensure adequate cover to prevent erosion and stabilize the soil. If inadequate rainfall occurs to establish adequate cover, a temporary watering system will be installed.

EQUIPMENT DECONTAMINATION

The construction of the final cover over the landfill has been planned such that there mav be some limited contact between construction equipment and the waste mass. The following steps will be taken to decontaminate equipment:

1. As much as possible of the waste and/or contaminated soil clinging to the equipment after contact will be removed and redeposited within the landfill, such that it can be covered by the cap.

2. Tools and/or equipment contacting the waste or contaminated soil will be taken to an onbase area where they will be steam cleaned on an impervious catchment apron with the wash waters collected, tested, and properly disposed of. Decon will be appropriate with the type of waste encountered.

CERTIFICATION OF CLOSURE

According to NMHWMR-4 Section 206.C.2.f which addresses certification of closure at disposal facilities with interim status, the Combat Support Group Commander will submit a certificate of closure to the director. Such certificate will be made by both himself and an independent registered professional engineer that the facility has been closed in accordance with the specifications in the approved closure plan.

Closure is not complete until the closure performance standard is met (NMHWMR-4 Section 206.C.2.b). This standard requires that the facility is closed so that further maintenance is minimized and that human health and the environment are protected from post closure escape of hazardous wastes.

The appropriate time to submit the Certification of Closure for cell No. 3 at landfill No. 5 will be at the time that the protective cover has been constructed and the final inspection of the vegetative cover is complete.

DEED RECORDING

The exact location of the closed landfill cell as well as a general description of the waste that it contains will be annotated in the Air Force Base Master Plan with a statement that this information is to be transferred to any new documents should the parcel of land be sold. The landfill boundaries and description will also be recorded in the facility folder and by facility number at the base. The closure will be included in the base master plan maps C-1E and M-5.

The Support Group Commander will ensure proper recording in accordance with New Mexico law, of a notation on the deed to the facility property or on some other instrument which is normally examined during title source - that will, in perpetuity, notify any potential purchaser of the property that the land has been used to manage hazardous wastes, and its use is restricted under the NMHWMR-4 Section 206.C.2.g(3).

SURVEY PLAT

Within 90 days after closure is completed, notice to Curry County Commissioners and to the Director will be submitted in the form of a survey plat in accordance with HWMR-4, Section 206.C.2.i.

POST CLOSURE MONITORING PLAN

The post closure monitoring program includes three concurrent activities. The first is a groundwater monitoring program designed to detect containment

migration from the landfill through the existing aquifer system. The second is an inspection and maintenance program designed to ensure the integrity of the cap. The third is a vent monitoring program designed to detect releases of volatile organic gases to the atmosphere.

POST CLOSURE GROUNDWATER MONITORING

The post closure groundwater monitoring program will utilize the four existing wells installed in December 1984 and January 1985 and identified as wells A, B, C, and D in the base records (see Figure 7). These four wells, one upgradient and three downgradient, as determined by the actual well water elevations measured after installation, are appropriate to monitor for contaminant migration from the landfill, since no contamination was detected from the first analytical samples taken in January 1985. They are screened into the uppermost aquifer (a depth of approximately 300 feet) and installed as shown in Figure 8.

The sampling and analysis of each well will occur on the schedule discussed below. Parameter selection includes those analyses identified by Cannon AFB personnel in the base groundwater monitoring plan, those recommended by New Mexico State officials, and those suggested by a review of the wastes known to be present in the landfill (i.e., chromium, lead, toluene, xylene, cyclohexanone, MEK, and MIBK).

The procedures and techniques for sample collection, preservation, and shipment, as well as specified analytical procedures and chain of custody, are described in the Cannon AFB Groundwater Sampling and Analysis Plan. The plan appears as Appendix II of this report. In addition to obtaining samples for the laboratory analyses, the elevation, pH, and conductivity of the water in the wells will be measured and recorded.

Samples were collected and analyzed quarterly for the first year of monitoring. The sampling and analysis did cover all parameters required by NMHWMR-4. Sampling and analysis will be performed annually for chloride, iron, manganese, phenols, sodium and sulfate. Sampling and analysis will be performed semiannually for pH, conductivity, total organic carbon (TOC) and total organic

FIGURE 7

MONITORING WELL LOCATIONS FOR LANDFILL No. 5

- A MONITOR WELL (UPGRADIENT)
- B, C, D, MONITOR WELLS (DOWNGRADIENT)

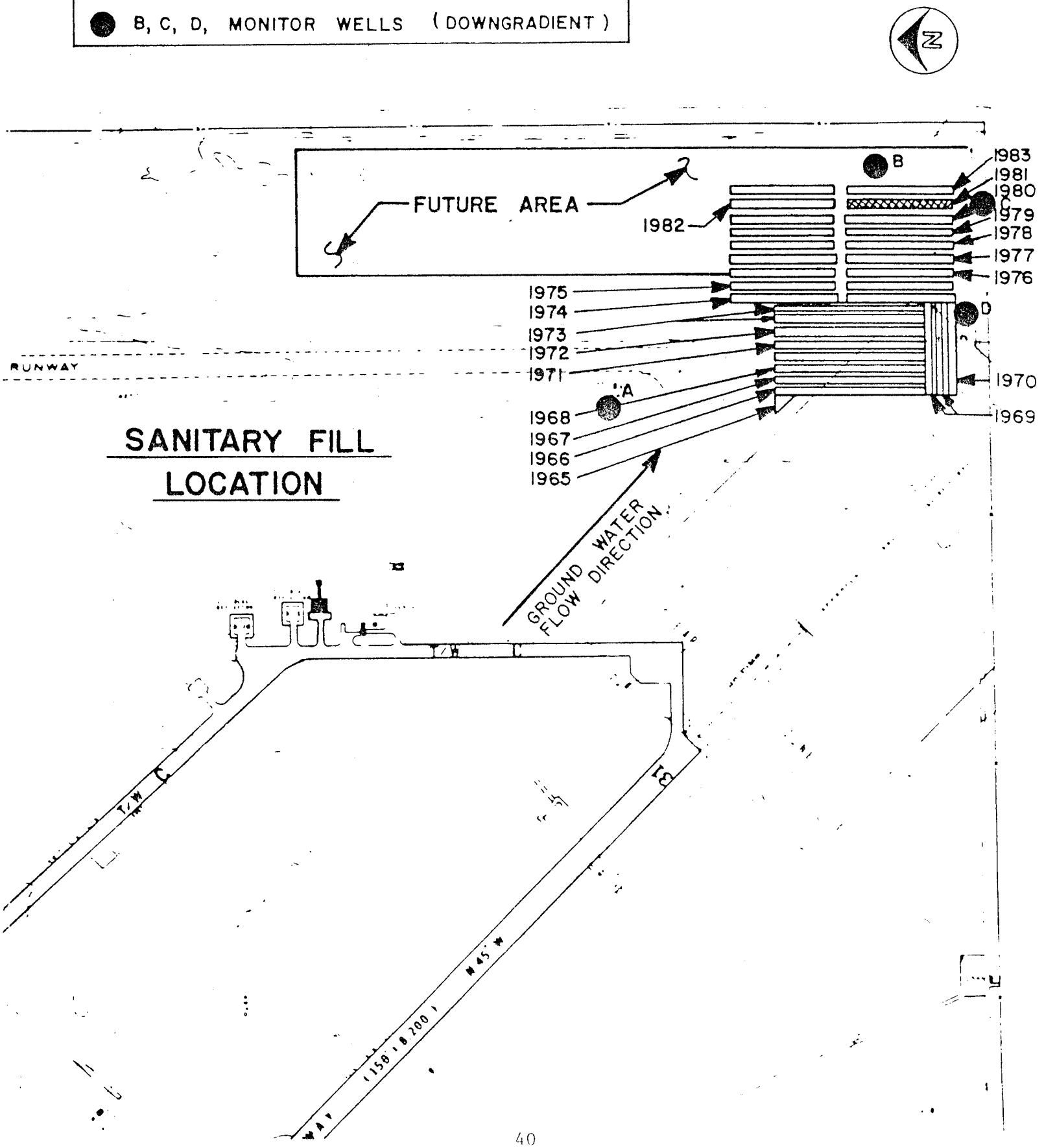

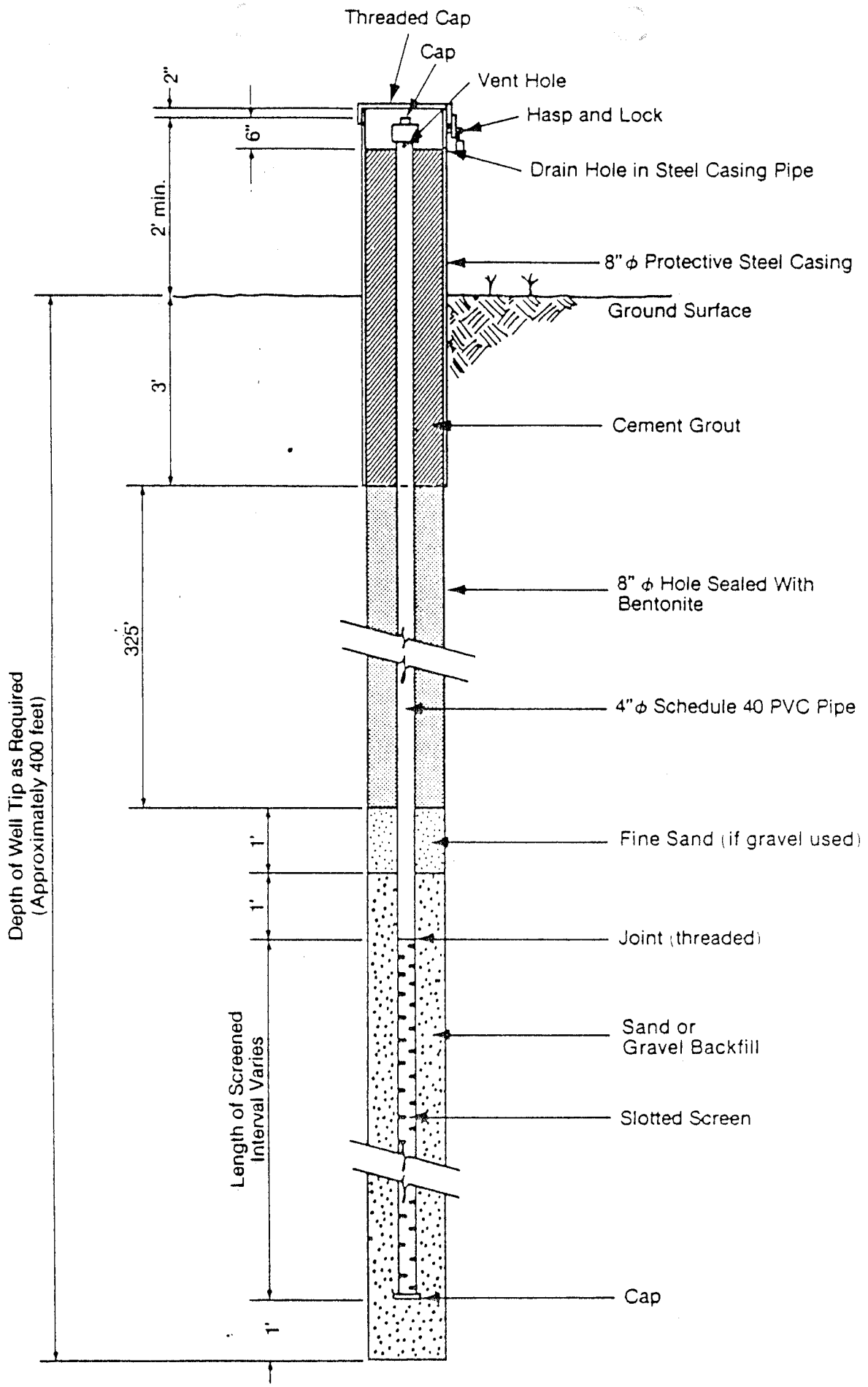

FIGURE 8
Typical Monitoring Well Installation.

halogen (TOX). Groundwater elevations will be measured before the collection of any sample and the locations of the monitoring wells and well performance will be evaluated. Additional wells will be installed if problems develop.

The analytical data obtained during the first year's quarterly monitoring will be used to establish initial background concentrations against which subsequent results will be assessed. Arithmetic means and variances based on four replicate measurements on each sample will be calculated for each of the indicator parameters, pH, conductivity, TOC, and TOX over the four quarters of the first year's sampling. Subsequently, each well's sample analysis for an indicator parameter will be compared to the initial background concentrations by calculating the arithmetic mean and variance for the parameter based on four replicate measurements and using the Student's t-test at the 0.01 level of significance to determine statistically significant increases (or decreases) over the initial background concentration. The GC/MS scans for priority pollutants will be evaluated on a present/nonpresent basis at the limit of detectability in all cases.

If the comparisons of the indicator parameters in the upgradient well show a significant deviation from initial background concentrations after a sampling effort, or if the GC/MS scan in the upgradient well shows positive results, the Director of the Environmental Improvement Division of the State of New Mexico will be notified no later than March 1 following each calendar year (New Mexico Hazardous Waste Regulations - 206.C.1.e.(1).(b).(ii)). If the comparisons of the indicator parameters in any of the downgradient wells show a significant deviation from initial background concentrations after a sampling effort, or if the GC/MS scan shows positive, the well or wells will be immediately resampled and the samples split in two and reanalyzed. If neither of the split samples confirms the deviation, it will be attributed to laboratory error, documented, and reported as such on the regular reporting schedule described below. If either of the reanalyses confirms the significant deviation from the initial background concentrations, the Director will be notified within 7 days [206.C.1.d.(5)].

Within 15 days of that confirmation of significant deviation, a specific plan for a groundwater quality assessment program will be developed and submitted to the Director [206.C.1.d.(6)]. The outline of the groundwater quality assessment program is shown in Exhibit 1. It will provide mechanisms to confirm or refute the presence of contaminants in the groundwater, determine the concentration of confirmed contaminants in the groundwater, and determine the rate and extent of migration of confirmed contaminants through the groundwater system. The first determination of the groundwater quality assessment program will be made as soon as it is technically feasible, and a written report of the determination will be submitted to the Director within 15 days [206.C.1.d.(8)]. If the results of the determination indicate that no landfill contamination has entered the groundwater, the groundwater monitoring program described herein will be reinstated and the Director so notified [206.C.1.d.(9)]. If the results indicate that contaminants have entered the groundwater, the Director will be so notified, and planning will be undertaken to develop remediation measures [206.C.1.d(10)].

The groundwater elevations in all wells (those already installed for the groundwater monitoring program and any that may have been installed as part of a groundwater quality assessment program) will be measured during every sampling effort. There will be an annual review to ensure that monitoring wells are placed correctly with respect to groundwater flow directions.

Exhibit 1

GROUNDWATER QUALITY ASSESSMENT PROGRAM OUTLINE

NOTE: The initiation of this program is triggered by the confirmation of a significant deviation from quality standards as discussed. It is not triggered by a deviation from quality standards in a normal monitoring sample but by the confirmation of that deviation in a subsequent split sample reanalysis.

I. Quantification

A. A predictive model will be developed to project the extent of the contaminant plume based on the existing well data.

B. Additional monitoring wells will be installed at the locations and depths suggested by the predictive model.

C. Samples from all wells will be quantitatively analyzed for the standard semiannual analyses, for use in the predictive model to calculate the extent of the contaminant plume and the rate of migration.

D. Samples from all wells will be analyzed to quantify those parameters appearing in Appendix VIII of 40 CFR Part 261. The list of those parameters and the appropriate test methods (as per SW-846, Test Methods for Evaluating Solid Waste) are as follows:

Parameter	Method(s)
Chromium	7190,7191
Lead	7420,7421
Arsenic	7060,7061
Mercury	7470,7471
Total organic halogens	9020
Methyl ethyl ketone	8015,8240
Methyl isobutyl ketone	8015,8240
Toluene	8020,8024
Xylene	8020,8024

Exhibit 1 (Continued)

E. A determination will be made whether the landfill is affecting the water quality.

II. Remediation

A. A decision will be made whether emergency remedial action is necessary and technically possible (i.e., pumping the existing wells to minimize migration).

B. A feasibility study will be undertaken to provide a permanent solution to the contamination problem and the cleanup of affected areas. Possible remedial alternatives include groundwater pumping and/or removal of landfill contents.

C. Upon approval, the design specifications for the selected remedial alternative will be prepared and the work performed.

Records of all analytical and water elevation data will be kept at the base throughout the post closure care period of 15 years (through 2000). Additionally, the following reports will be made to the Director (206.C.1.e):

- The results of the quarterly sampling and analysis efforts during the first year of monitoring will be submitted with 15 days after receipt of such information by the base. In this report, any well exhibiting a parameter or parameters that exceed the maximum contaminant level listed in Appendix II of the New Mexico State regulations (reproduced as Table 9 in this report) will be separately identified.

- Annually, no later than March 1 following each calendar year, the results of the semiannual and annual monitoring will be submitted, including deviations from the background concentrations in the upgradient well, as previously discussed.

- If a groundwater quality assessment program is initiated, reports containing calculated concentrations and migration rates will be submitted annually, no later than March 1, following each calendar year.

POST CLOSURE COVER MAINTENANCE

The second activity of the post closure monitoring plan is the inspection and maintenance program to ensure the integrity of the cover. On a quarterly basis and after a heavy precipitation, a prolonged drought, and/or a high wind, the cover will be inspected. Any rill erosion, damage to the vegetative cover or minor settling will be corrected with common borrow patching or seeding of the problem area. Weeding will be conducted at every inspection to control undesirable weeds which may take root. If rills are deeper than 10 inches, then it will be necessary to regrade the problem area in accordance with the specifications of the closure plan .

Equipment to be used during post closure maintenance is essentially the same as that used to construct the final cover system. If inadequate rainfall occurs to establish adequate cover, a temporary watering system will be installed. If regrading and/or removal becomes necessary, then a backhoe will secure necessary common borrow for the cover from an existing pile outside of the fence. Heavy machinery will not be allowed to travel on the cover. All repair work on the cover will be done by hand compaction, using a vibrating plate.

TABLE 9. EPA Interim Primary Drinking Water Standards

PARAMETER	MAXIMUM LEVEL (mg/l)
Arsenic	0.05
Barium	1.0
Cadmium	0.01
Chromium	0.05
Fluoride	1.4-2.4
Lead	0.05
Mercury	0.002
Nitrate (as N)	10
Selenium	0.01
Silver	0.05
Endrin	0.0002
Lindane	0.004
Methoxychlor	0.1
Toxaphene	0.005
2,4-D	0.1
2,4,5-TP Silvex	0.01
Radium	5 pCi/l
Gross alpha	15 pCi/l
Gross beta	4 millirem/yr
Turbidity*	1/TU
Coliform bacteria	1/100 ml

*Turbidity is applicable only to surface water supplies.

VENT MONITORING

On a periodic basis, the four vents along the centerline of cell No. 3 will be monitored for evidence of gaseous emission to the ambient atmosphere. Monitoring results will be maintained at Cannon AFB.

INSPECTION SCHEDULE

These inspections and maintenance activities will be maintained for 30 years following the receipt of certification of final closure for landfill cell No. 3.

Should any difficulties arise during the post closure period, the base environmental coordinator should be contacted. The office is located at Cannon AFB, New Mexico, and the phone number is (505) 784-4639.

REFERENCES

1. CH2M Hill, "Installation Restoration Program Records Search for Cannon Air Force Base", New Mexico, August 1983.

2. Cannon Air Force Base, "Sanitary Landfill - Design Construction and Operation," 1976.

3. Bennett, Warren, Design Division, New Mexico State Highway Administration, personal communication, 1985.

4. Daugherty, Ph.D., Professor of Agronomy, New Mexico State University, personal communication, 1985.

5. New Mexico State Highway Department, "Geology and Aggregate Resources, District 11," 1972.

6. USEPA, "Handbook for Evaluating Remedial Action Technology Waste," EPA 600/2-83-076, 1983.

7. Lutton, R. J., "Evaluating Cover Systems for Solid and Hazardous Waste," EPA SW - 867, 1980.

8. Lutton, R. J., et al, "Design and Construction of Covers for Solid Waste Landfills," EPA 600/2-79-165, 1979.

9. Lutton, R. J., U.S. Army Engineer Waterways Experiment Station, Vicksburg, MS, personal communication, 1985.

10. Geoscience Consultants, Ltd., "Cannon AFB, New Mexico Landfill Core Drilling Project (CAN 84-0082)," 1985.

APPENDIX I

EVALUATION OF EROSION POTENTIAL

Using the USDA universal soil loss equation (USLE):

$$A = R \cdot K \cdot LS \cdot C \cdot P$$

Where:
- A = average annual soil loss (tons/acres)
- R = rainfall and runoff erosivity index
- K = soil erodibility factor (tons/acres)
- LS = combination of slope-length factor and slope-steepness factor
- C = cover management factor
- P = practice factor

For 3% Grade:

for Eastern NM,	R = 100	(See Figure 1.1)
for 4% organic matter and sandy clay loam,	K = 0.21	(See Table 1.1)
for 3% slope and 800 ft slope length, (worst case)	LS = 0.62	(See Table 1.2)
for moderately productive grass,	C = 0.01	(See Table 1.3)
for spring-seeded grain,	P = 0.60	(See Table 1.4)

Thus:
$$A = 100 \cdot 0.21 \text{ tons/acre} \cdot 0.62 \cdot 0.01 \cdot 0.6$$
$$A = 0.068 \text{ tons/acre}$$
$$A = 136 \text{ lbs/acre}$$

Assumed density of topsoil = 90 lbs/ft^3

Surface Area of final cover $= \dfrac{60 \text{ ft} \cdot 810 \text{ ft}}{43{,}600 \text{ ft/acre}} = 1.115$ acres

EROSION PER YEAR $= \dfrac{136 \text{ lbs/acre} \cdot 1.115 \text{ acres}}{90 \text{ lbs/ft}^3}$

$= 1.69 \text{ ft}^3$

For 25% Grade:

for Eastern NM,	R = 100	(See Figure 1.1)
for 4% organic matter and sandy clay loam,	K = 0.21	(See Table 1.1)
for 25% slope and 12.5 ft slope length, (use 25 ft)	LS = 3	(See Table 1.2)
for moderately productive grass,	C = 0.01	(See Table 1.3)
for spring-seeded grain,	P = 0.60	(See Table 1.4)

Thus:

$$A = 100 \cdot 0.21 \text{ tons/acre} \cdot 3 \cdot 0.01 \cdot 0.6$$
$$A = 0.378 \text{ tons/acre}$$
$$A = 756 \text{ lbs/acre}$$

Assumed density of topsoil = 90 lbs/ft^3

Surface Area of final cover $= \dfrac{1440 \text{ ft} \cdot 12.5 \text{ ft}}{43{,}600 \text{ ft/acre}} = 0.413$ acres

EROSION PER YEAR $= \dfrac{756 \text{ lbs/acre} \cdot 0.413 \text{ acres}}{90 \text{ lbs/ft}^3}$

$= 3.47 \text{ ft}^3$

TOTAL EROSION PER YEAR $= 1.69 \text{ ft}^3 + 3.47 \text{ ft}^3$

$= 5.16 \text{ ft}^3$

Figure 1.1. Average annual values of rainfall-erosivity factor R.*

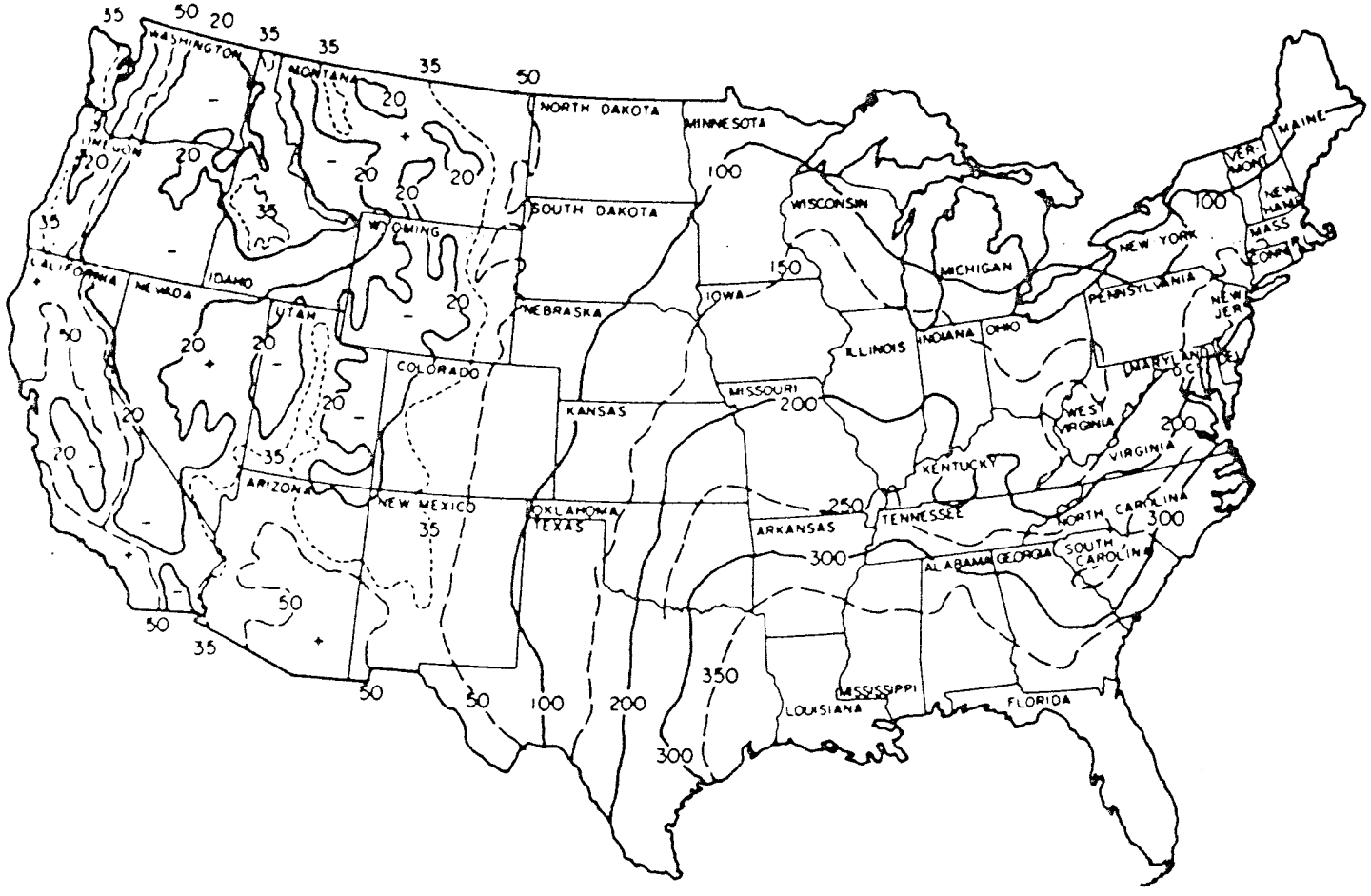

*See Ref. 7, p. 46.

TABLE 1.1 Approximate Values of Factor K for USDA Textural Classes*

Texture Class	Organic matter content <0.5% K	2% K	4% K
Sand	0.05	0.03	0.02
Fine sand	.16	.14	.10
Very fine sand	.42	.36	.28
Loamy sand	.12	.10	.08
Loamy fine sand	.24	.20	.16
Loamy very fine sand	.44	.38	.30
Sandy loam	.27	.24	.19
Fine sand loam	.35	.30	.24
Very fine sandy loam	.47	.41	.33
Loam	.38	.34	.29
Silt loam	.48	.42	.33
Silt	.60	.52	.42
Sandy clay loam	.27	.25	.21
Clay loam	.28	.25	.21
Silty clay loam	.37	.32	.26
Sandy clay	.14	.13	.12
Silty clay	.25	.23	.19
Clay		0.13-0.29	

The values shown are estimated averages of broad ranges of specific-soil values. When a texture is near the borderline of two texture classes, use the average of the two K values.

*See Ref. 7, p. 46.

TABLE 1.2 Values of the Factor LS for Specific Combinations of Slope Length and Steepness*

% Slope	Slope length (feet) 25	50	75	100	150	200	300	400	500	600	800	1000
0.5	0.07	0.08	0.09	0.10	0.11	0.12	0.14	0.15	0.16	0.17	0.19	0.20
1	0.09	0.10	0.12	0.13	0.15	0.16	0.18	0.20	0.21	0.22	0.24	0.26
2	0.13	0.16	0.19	0.20	0.23	0.25	0.28	0.31	0.33	0.34	0.38	0.40
3	0.19	0.23	0.26	0.29	0.33	0.35	0.40	0.44	0.47	0.49	0.54	0.57
4	0.23	0.30	0.36	0.40	0.47	0.53	0.62	0.70	0.76	0.82	0.92	1.0
5	0.27	0.38	0.46	0.54	0.66	0.76	0.93	1.1	1.2	1.3	1.5	1.7
6	0.34	0.48	0.58	0.67	0.82	0.95	1.2	1.4	1.5	1.7	1.9	2.1
8	0.50	0.70	0.86	0.99	1.2	1.4	1.7	2.0	2.2	2.4	2.8	3.1
10	0.69	0.97	1.2	1.4	1.7	1.9	2.4	2.7	3.1	3.4	3.9	4.3
12	0.90	1.3	1.6	1.8	2.2	2.6	3.1	3.6	4.0	4.4	5.1	5.7
14	1.2	1.6	2.0	2.3	2.8	3.3	4.0	4.6	5.1	5.6	6.5	7.3
16	1.4	2.0	2.5	2.8	3.5	4.0	4.9	5.7	6.4	7.0	8.0	9.0
18	1.7	2.4	3.0	3.4	4.2	4.9	6.0	6.9	7.7	8.4	9.7	11.0
20	2.0	2.9	3.5	4.1	5.0	5.8	7.1	8.2	9.1	10.0	12.0	13.0
25	3.0	4.2	5.1	5.9	7.2	8.3	10.0	12.0	13.0	14.0	17.0	19.0
30	4.0	5.6	6.9	8.0	9.7	11.0	14.0	16.0	18.0	20.0	23.0	25.0
40	6.3	9.0	11.0	13.0	16.0	18.0	22.0	25.0	28.0	31.0	--	--
50	8.9	13.0	15.0	18.0	22.0	25.0	31.0	--	--	--	--	--
60	12.0	16.0	20.0	23.0	28.0	--	--	--	--	--	--	--

Values given for slopes longer than 300 feet or steeper than 18% are extrapolations beyond the range of the research data and, therefore, less certain than the others.

*See Ref. 7, p. 46.

TABLE 1.3 Generalized Values of Factor C for States East of the Rocky Mountains*

Crop, rotation, and management	Productivity level High	Productivity level Mod.
	C value	
Base value: continuous fallow, tilled up and down slope	1.00	1.00
CORN		
C, RdR, fall TP, conv	0.54	0.62
C, RdR, spring TP, conv	.50	.59
C, RdL, fall TP, conv	.42	.52
C, RdR, wc seeding, spring TP, conv	.40	.49
C, RdL, standing, spring TP, conv	.38	.48
C-W-M-M, RdL, TP for C, disk for W	.039	.074
C-W-M-M-M, RdL, TP for C, disk for W	.032	.061
C, no-till pl in c-k sod, 95-80% rc	.017	.053
COTTON		
Cot, conv (Western Plains)	0.42	0.49
Cot, conv (South)	.34	.40
MEADOW		
Grass & Legume mix	0.004	0.01
Alfalfa, lespedeza or Sericia	.020	
Sweet clover	.025	

Abbreviations defined:

B - soybeans
C - corn
c-k - chemically killed
conv - conventional
cot - cotton
F - fallow
M - grass & legume hay
pl - plant
W - wheat
wc - winter cover

lbs rc - pounds of crop residue per acre remaining on surface after new crop seeding
% rc - percentage of soil surface covered by residue mulch after new crop seeding
70-50% rc - 70% cover for C values in first column; 50% for second column
RdR - residues (corn stover, straw, etc.) removed or burned
RdL - all residues left on field (on surface or incorporated)
TP - turn plowed (upper 5 or more inches of soil inverted, covering residues)

*See Ref. 7, p. 46.

TABLE 1.3 Generalized Values of Factor C for States East of the Rocky Mountains* (continued)

Crop, rotation, and management	Productivity level High	Productivity level Mod.
	C value	
Base value: continuous fallow, tilled up and down slope	1.00	1.00
SORGHUM, GRAIN (Western Plains)		
RdL, spring TP, conv	0.43	0.53
No-till pl in shredded 70-50% rc	.11	.18
SOYBEANS		
B, RdL, spring TP, conv	0.48	0.54
C-B, TP annually, conv	.43	.51
B, no-till pl	.22	.28
C-B, no-till pl, fall shred C stalks	.18	.22
WHEAT		
W-F, fall TP after W	0.38	
W-F, stubble mulch, 500 lbs rc	.32	
W-F, stubble mulch, 1000 lbs rc	.21	

Abbreviations defined:

B - soybeans
C - corn
c-k - chemically killed
conv - conventional
cot - cotton
F - fallow
M - grass & legume hay
pl - plant
W - wheat
wc - winter cover

lbs rc - pounds of crop residue per acre remaining on surface after new crop seeding
% rc - percentage of soil surface covered by residue mulch after new crop seeding
70-50% rc - 70% cover for C values in first column; 50% for second column
RdR - residues (corn stover, straw, etc.) removed or burned
RdL - all residues left on field (on surface or incorporated)
TP - turn plowed (upper 5 or more inches of soil inverted, covering residues)

*See Ref. 7, p. 46.

TABLE 1.4 Values of Factor P*

Practice	Land slope (percent) 1.1-2	2.1-7	7.1-12 (Factor P)	12.1-18	18.1-24
Contouring (P_c)	0.60	0.50	0.60	0.80	0.90
Contour strip cropping (P_{sc})					
R-R-M-M[1]	0.30	0.25	0.30	0.40	0.45
R-W-M-M	0.30	0.25	0.30	0.40	0.45
R-R-W-M	0.45	0.38	0.45	0.60	0.68
R-W	0.52	0.44	0.52	0.70	0.90
R-O	0.60	0.50	0.60	0.80	0.90
Contour listing or ridge planting (P_{cl})	0.30	0.25	0.30	0.40	0.45
Contour terracing (P_t)[2]	[3]$0.6/n^{1/2}$	$0.5/n^{1/2}$	$0.6/n^{1/2}$	$0.8/n^{1/2}$	$0.9/n^{1/2}$
No support practice	1.0	1.0	1.0	1.0	1.0

[1]R = rowcrop, W = fall-seeded grain, O = spring-seeded grain, M = meadow. The crops are grown in rotation and so arranged on the field that rowcrop strips are always separated by a meadow or winter-grain strip.

[2]These P_t values estimate the amount of soil eroded to the terrace channels and are used for conservation planning. For prediction of off-field sediment, the P_t values are multiplied by 0.2.

[3]n = number of approximately equal-length intervals into which the field slope is divided by the terraces. Tillage operations must be parallel to the terraces.

*See Ref. 7, p. 46.

APPENDIX II

GROUNDWATER SAMPLING AND ANALYSIS PLAN

A. SAMPLE COLLECTION

1. Determine the static water elevation to the nearest 0.01 inch using an electronic well probe.

2. Calculate the wetted well volume.

3. Pump out 5 wetted well volumes or until pH, conductivity and temperature stabilize (whichever is greater).

4. For total organic carbon (TOC) and total organic halogen (TOX), fill the sample container until overfilled, place the cap on it, and tighten. Turn the container upside down and check for air bubbles. If any air is present retake the sample (see Table 2.3, Note E).

5. For all other samples, fill the sample container full enough to ensure a sufficient volume for the analytical test to be performed.

B. SAMPLE PRESERVATION AND SHIPMENT

1. Sampling Parameters Used to Indicate Suitability of the Groundwater as a Drinking Water Supply (see Table 2.1).

2. Sampling Parameters Used to Establish Groundwater Quality (see Table 2.2).

3. Sampling Parameters Used as Indicators of Groundwater Contamination (see Table 2.3).

C. CHAIN OF CUSTODY. Samples will be sent to USAF OEHL in a sealed shipping container. A Chain-Of-Custody record (see Figure C-4) will be filled out, signed and placed in a plastic bag along with the usual sample submission form (see Figure C-5) and sealed in the shipping container. A duplicate will be kept by SGPB with the duplicates of the sample submission forms. OEHL personnel will acknowledge receipt of the samples in good condition by signing the Chain-Of-Custody form and returning it to Cannon AFB. If the container is damaged in any way or not sealed when the lab receives the package, the technician will so annotate on the form.

TABLE 2.2

ANALYSIS	PRESERVATIVE GROUP	STORET#	PRESERVATIVE/ WORK CENTER	NOTES	REF
ARSENIC	F	01002	F1XX-10510	B	E206
BARIUM	F	01007	F1XX-10510	B	E208
CADMIUM	F	01027	F1XX-10510	B	E213
CHROMIUM	F	01034	F1XX-10510	B	E218
FLUORIDE	G	00951	G1XX-10630	C	E340
LEAD	F	01051	F1XX-10510	B	E239
MERCURY	F	71900	F1XX-10510	B	E245
NITRATE	A	00620	A1XX-10110	B,X	E353
SELENIUM	F	01147	F1XX-10510	B	E270
SILVER	F	01077	F1XX-10510	B	E272
ENDRIN	H	39390	H1XX-10700	D	E608
LINDANE	H	39782	H1XX-10700	D	E608
METHOXYCHLOR	H	39480	H1XX-10700	D	E608
TOXAPHENE	H	39400	H1XX-10700	D	E608
2,4-D	H	39730	H1XX-10700	D	A509
2,4,5-TP-SILVEX	H	39760	H1XX-10700	D	A509
RADIUM	R1				E600
GROSS ALPHA	R1				E600
GROSS BETA	R1				E600
COLIFORM BACT.	G	31501	G1XX-10000	G	A908A

TABLE 2.2

ANALYSIS	PRESERVATIVE GROUP	STORET#	PRESERVATIVE/ WORK CENTER	NOTES	REF
CHLORIDE	G	00940	G1XX-10630	B	E325
IRON	F	01045	F1XX-10510	B	E236
MANGANESE	F	01055	F1XX-10510	B	E243
PHENOLS	E	32730	E1XX-10400	B	E420
SODIUM	F	00929	F1XX-10510	B	E273
SULFATE	G	00945	G1XX-10630	B	E375

TABLE 2.3

ANALYSIS	PRESERVATIVE GROUP	STORET#	PRESERVATIVE/ WORK CENTER	NOTES	REF
SPECIFIC COND.	G	00095	G1XX-10620	B	E120
ORGANIC CARBON	A	00680	A1XX-10130	B	E415
TOT ORG HALOGENS	T			E	E9020
PH	G	00400	G1XX-10000	F	A423

NOTES

NOTE A. STORET# is a number assigned by EPA to a specific environmental parameter such as a physical characteristic or a chemical.

REF is the source for the analytical method.

E = EPA Manual for Chemical Analysis of Water and Wastes, EPA Manual of Methods, Pesticide Residues in Human and Environmental Samples, or Prescribed Procedures for Measurement of Radioactivity in Drinking Water

A = APHA Standard Methods for the Examination of Water and Waste Water.

NOTE B. Sample containers for environmental samples may be either polyethylene (plastic) or glass except where a specific container and/or special sampling techniques are called for in the notes.

NOTE C. Samples must be submitted in polyethylene (plastic) containers for this analysis.

NOTE D. Samples must be submitted in glass containers for this test.

NOTE E. Volatile Halocarbon Compounds; Sample Collection and Handling.

1. Sample containers are 40 ml glass screw cap bottles with TFE fluorocarbon faced silicon septa liners. These containers will be supplied by the USAF OEHL.

2. Sample Collection

a. Collect samples from each sampling site in triplicate. Mark the bottles A, B, and C.

b. Fill the sample bottles in such a manner that no air bubbles pass through the sample as the bottle is filled to overflowing.

c. Place bottle on a level surface and position the TFE side of the septum liner upon the convex meniscus of the sample. Seal the bottle by screwing the cap on tightly.

NOTE: If the septum liner is inverted (i.e., the silicon side against the sample), then significant losses of volatile compounds will occur in shipment and storage.

d. Invert the sample bottle and slightly tap the cap on a solid surface. The absence of entrapped air (bubble) indicates a successful seal. If bubbles are present, open the bottle, pour out the sample, and collect a fresh sample again.

NOTE F. In the field we will calibrate a digital pH meter using two standardized pH solutions. The solutions will be made using deionized water and two standard pH capsules. The pH sample will be collected in a 50 ml plastic beaker and analyzed before any further sampling is accomplished.

NOTE G. A sample for total coliform bacteria will be collected from each of the monitor wells in a 120 ml thio-bag or an autoclaved, sodium thiosulfate treated 100 ml glass jar. After collection, the sample will be taken to the Clovis Branch of the Scientific Laboratory Division of the State of New Mexico Environmental Improvement Division where they will run a total coliform analysis using the Most Probable Number (MPN) method.

NOTE X. Holding time for the chemical/compound is 7 days. Consult the chemist at USAF OEHL/SA or the Water Quality Function at USAF OEHL/ECQ and alert them that we are sending nitrates to be analyzed. This way we can be assured that the recommended maximum holding time will not be exceeded.

PRESERVATION

A1XX. Cool to 4 degrees C. Add sulfuric acid to pH <2. Submit 1 liter in a polyethylene or glass container.

E1XX. Cool to 4 degrees C. Add sulfuric acid to pH <2. Submit 1 liter in a polyethylene or glass container.

F1XX. Add nitric acid to pH <2. Submit 1 liter in a polyethylene or glass container.

G1XX. Cool to 4 degrees C. Add no other preservative. Submit 1 liter in a glass or polyethylene container.

H1XX. Cool to 4 degrees C. Submit 1 liter in glass container with Teflon (R) lined cap for the OCL screen. Submit 1 liter in glass container with Teflon (R) lined cap for 2,4-D and 2,4,5-TP-Silvex.

R1. Add Nitric acid to pH <2. Submit 1 liter in a polyethylene container.

T1XX. Submit only in special containers obtained from USAF OEHL/SAN [AUTOVON 240-3626 or (512) 536-3626/Mr. Rodriguez].

Figure C-4 Chain-of-Custody Record

Survey

Samplers: *Signature*

Station Number	Station Location	Date	Time	Sample Type Water Comp.	Sample Type Water Grab	Sample Type Air	Seq. No.	No. of Containers	Analysis Required

Relinquished by: *Signature*	Received by: *Signature*	Date/Time
Relinquished by: *Signature*	Received by: *Signature*	Date/Time
Relinquished by: *Signature*	Received by: *Signature*	Date/Time
Relinquished by: *Signature*	Received by Mobile Laboratory for Field analysis: *Signature*	Date/Time

Dispatched by: *Signature*	Date/Time	Received for Laboratory by:	Date/Time

Method of Shipment:

Distribution: Orig.—Accompany Shipment
1 Copy—Survey Coordinator Field Files

ENVIRONMENTAL SAMPLING DATA

(Use this space for mechanical imprint)

OEHL USE ONLY

SAMPLING SITE IDENTIFIER (AFR 19-7)

BASE WHERE SAMPLE COLLECTED

SAMPLING SITE DESCRIPTION

DATE COLLECTION BEGAN (YYMMDD)

TIME COLLECTION BEGAN (24 hour clock)

COLLECTION METHOD [ ] GRAB [ ] COMPOSITE _____ HOURS

MAIL REPORTS TO (circle if changed): ORIGINAL / COPY 1 / COPY 2

SAMPLE COLLECTED BY (Name, Grade, AFSC)

SIGNATURE

AUTOVON

REASON FOR SUBMISSION: A-ACCIDENT/INCIDENT, R-ROUTINE/PERIODIC, C-COMPLAINT, N-NPDES, F-FOLLOWUP/CLEANUP, O-OTHER (specify)

BASE SAMPLE NUMBER

OEHL PID

ANALYSES REQUESTED (check appropriate blocks)

	GROUP A		Hardness	00900		Residue, Settleable	50086		GROUP T
	Ammonia	00610	Iron	01045		Residue, Volatile	00505		Bromoform 32104
	Chemical Oxygen Demand	00340	X Lead	01051		Silica	00955		Bromodichloromethane 32101
	Kjeldahl Nitrogen	00625	Magnesium	00927		Specific Conductance	00095		Carbon Tetrachloride 32102
X	Nitrate	00620	Manganese	01055		Sulfate	00945		Chloroform 32106
	Nitrite	00615	X Mercury	71900		Sulfite	00740		Chloromethane 34418
	Oil & Grease	00560	Nickel	01067		Surfactants -MBAS	38260		Dibromochloromethane 32105
	Organic Carbon	00680	Potassium	00937		Turbidity	00076		Methylene Chloride 34423
	Orthophosphate	00671	X Selenium	01147					Tetrachloroethylene 34475
	Phosphorus, Total	00665	X Silver	01077					1,1,1-Trichloroethane 34506
			Sodium	00929		GROUP H			Trichloroethylene 39180
	GROUP D		Thallium	01059		BHC Isomers	39340		Trihalomethanes 82080
	Cyanide, Total	00720	Zinc	01092		Chlordane	39350		PCBs 39516
	Cyanide, Free	00722				DDT Isomers	39370		
						Dieldrin	39380		
	GROUP E		GROUP G		X	Endrin	39390		
	Phenols	32730	Acidity, Total	70508		Heptachlor	39410		
			Alkalinity, Total	00410		Heptachlor Epoxide	39420		
	GROUP F		Alkalinity, Bicarbonate	00425	X	Lindane	39782		
	Antimony	01097	Bromide	71870	X	Methoxychlor	39480		
X	Arsenic	01002	Carbon Dioxide	00405	X	Toxaphene	39400		
X	Barium	01007	Chloride	00940	X	2,4-D	39730		ON SITE ANALYSES
	Beryllium	01012	Color	00080	X	2,4,5-TP-Silvex	39760		Parameter / Value
	Boron	01022	X Fluoride	00951		2,4,5-T	39740		Flow 50050 mgd
X	Cadmium	01027	Iodide	71865					Chlorine, Total 50060 mg/l
	Calcium	00916	Odor	00086					Dissolved Oxygen 00300 mg/l
X	Chromium, Total	01034	Residue, Total	00500					pH 00400 units
	Chromium VI	01032	Residue, Filterable (TDS)	70300		GROUP J			Temperature 00010 °C
	Copper	01042	Residue, Nonfilterable	00530		Sulfides	00745		

COMMENTS: Need Receiving Station, ~~[illegible]~~ 2753 Collection

AF FORM JAN 81 2752

figure [illegible]

D. SAMPLING FREQUENCY

1. Sampling for all parameters will be performed on a quarterly basis for the first year in order to establish initial concentrations for all groundwater parameters.

2. For the first year, samples collected for the parameters used as indicators of groundwater contamination (pH, specific conductance, TOC, and TOX) from the upgradient well (well A) must be taken in replicates of four. The initial background arithmetic mean and variance must be determined by pooling the replicate measurements for the respective parameter concentrations or values.

3. After the first year, samples collected to establish groundwater quality, i.e., chloride, iron, manganese, phenols, sodium, and sulfate, will be collected annually. Whereas, samples collected to indicate groundwater contamination, i.e., pH, specific conductance, TOC, and TOX, will be collected semi-annually and will be collected from each well in replicates of four. The arithmetic mean and variance will be calculated based on the four replicate samples and the results from each will be compared to its respective initial background arithmetic mean.

4. The comparison will consider each of the wells in the monitoring system individually and will use the student's t-test (see 206.C -Appendix III of the New Mexico Hazardous Waste Management Regulation [NMHWMR]) at the 0.01 level of significance to determine statistically significant increases (and decreases, in the case of pH) over initial background.

5. If the comparison for the upgradient well shows a significant increase (or pH decrease), in accordance with the NMHWMR section 206.C.1.d. (3) the owner or operator will submit this information to the director of the State of New Mexico Environmental Improvement Division (NMEID) no later than March 1 following the calendar year in which the reportable incident occurred.

6. If the comparisons for the downgradient wells show a significant increase (or pH decrease), the owner or operator will immediately obtain additional groundwater samples from those downgradient wells where a significant difference was detected. These samples will be split in two, and analyses obtained for all additional samples to determine whether the significant difference was a result of laboratory error. If the analyses performed confirm the significant increase (or pH decrease), the owner or operator will provide written notice to the director of the State of New Mexico Environmental Improvement Division (NMEID) within seven calendar days of the date of such confirmation that the facility may be affecting groundwater quality.

7. Within fifteen days after the notification, the owner or operator will develop and submit to the director of the State NMEID a specific plan, based on the groundwater assessment outline and certified by a qualified geologist or geotechnical engineer, for a groundwater quality assessment program.

E. RECORDKEEPING AND REPORTING

1. In accordance with the NMHWMR section 206.C.1.e(1)(a) records of the required analyses will be maintained in both the Bioenvironmental Engineering Section and the Environmental Coordinator's office at Cannon AFB, NM throughout the post-closure care period.

2. The following groundwater monitoring information will be reported to the director of the State NMEID in Santa Fe.

a. During the first year when initial background concentrations are being established, concentrations or values of the parameters characterizing the suitability of the groundwater as a drinking water supply for each groundwater monitoring well must be received within fifteen days after completing each quarterly analysis. The owner or operator must separately identify for each monitoring well any parameter whose concentration or value has been found to exceed EPA's maximum contaminant levels.

b. Annually: Concentrations or values of the parameters used as indicators of groundwater contamination for each groundwater monitoring well along with the required evaluations for these parameters in accordance with NMHWMR section 206.C.1.d. (2).

c. Not later than March 1 following each calendar year, results of the evaluation of groundwater surface elevations and a description of the response to that evaluation, if applicable, will be reported to the director of the NMEID.

3. There is no requirement after the first year for periodic sampling for parameters indicating suitability as potable water (EPA Interim Primary Drinking Water Standards).

F. POST-CLOSURE SAMPLING. Sampling of the groundwater monitoring wells for the required parameters will continue for 30 years after the date of completing closure in accordance with the NMHWMR section 206.C.2.g. (1) unless the director of the NMEID reduces this requirement due to a lack of significant findings.

APPENDIX III