CAFB 94

Steve A
Steve P
Barbara
C7 file
CAFB Red
FY94

UNITED STATES ENVIRONMENTAL PROTECTION AGENCY
REGION 6
1445 ROSS AVENUE, SUITE 1200
DALLAS, TX 75202-2733

MAR 07 1994

MAR 11 1994

CERTIFIED MAIL - RETURN RECEIPT REQUESTED

General William M. Guth, Commander
United States Air Force
Headquarters, 27th Fighter Wing (ACC)
Cannon Air Force Base, New Mexico 88103-5214

Re: Bioventing Pilot Study, SWMU #70
Cannon Air Force Base, EPA ID NO. NM7572124454

XIII

Dear General Guth:

The Environmental Protection Agency (EPA) has completed a technical review of your Bioventing Pilot Study Workplan submitted on January 21, 1994.

As was discussed at the meeting on March 1, 1994, at Region 6 Headquarters in Dallas, the EPA feels that the vertical and horizontal extent of contamination has not been determined at SWMU #70 and therefore suggests that continuous sampling be performed during the installation of the four borings and that these samples be analyzed for VOCs, SVOCs, metals, and TPH.

If Cannon Air Force Base proceeds with this Bioventing Pilot Study without incorporating EPA's comments, then any information obtained during this study will not be acceptable for the EPA in the determination of the vertical and horizontal extent of contamination.

It should be noted that the EPA in the RFI Phase II Investigation of SWMU #70, will require Cannon Air Force Base to delineate the vertical and horizontal extent of contamination with continuous sampling and these samples will be analyzed for VOCs, SVOCs, metals, and TPH.

If you have any questions, please contact Bill Hurlbut of my staff at (214) 655-8305.

Sincerely yours,

WK Honker

William K. Honker, P.E.
Chief, RCRA Permits Branch

Enclosure
cc: Benito Garcia, NMED

Printed on Recycled Paper

DRAFT

Bioventing Pilot Test Work Plan for SWMU #70 - Oil/Water Separator No. 326 Cannon AFB, New Mexico

LIBRARY COPY

Prepared For

Air Force Center for Environmental Excellence
Brooks AFB, Texas

and

27 CES/CEV
Cannon AFB, New Mexico

ES
Engineering-Science, Inc.
1700 BROADWAY, SUITE 900
DENVER, COLORADO 80290

January 1994

ES ENGINEERING-SCIENCE

DRAFT

BIOVENTING PILOT TEST WORK PLAN FOR SWMU #70 - OIL/WATER SEPARATOR NO. 326

CANNON AFB, NEW MEXICO

Prepared for:

Air Force Center for Environmental Excellence
Brooks AFB, Texas

and

27 CES/CEV
CANNON AFB, NEW MEXICO

Prepared by:

Engineering-Science, Inc.
1700 Broadway, Suite 900
Denver, Colorado 80290

JANUARY 1994

A7-31-1

TABLE OF CONTENTS

DRAFT
BIOVENTING PILOT TEST WORK PLAN FOR SWMU #70 - OIL/WATER SEPARATOR NO. 326 CANNON AFB, NEW MEXICO

Page

1.0 Introduction 1

2.0 Facility 187 3
- 2.1 Site Description 3
- 2.2 Soil Gas Sampling Activities 3

3.0 SWMU #70 - Oil/Water Separator No. 326 3
- 3.1 Site Description 3
  - 3.1.1 Site History and Location 3
  - 3.1.2 Site Geology 5
  - 3.1.3 Site Contaminants 5
- 3.2 Pilot Test Activities 5
  - 3.2.1 Layout of Pilot Test Components 6
  - 3.2.2 Vent Well 6
  - 3.2.3 Monitoring Points 6
  - 3.2.4 Blower System 10
  - 3.2.5 Air Permeability Test 10
  - 3.2.6 *In Situ* Respiration Test 10
  - 3.2.7 Extended Pilot Test Bioventing System 12

4.0 Background Monitoring Point 12

5.0 Soil and Soil Gas Sampling 12
- 5.1 Soil Samples 12
- 5.2 Soil Gas Samples 13

6.0 Handling of Drill Cuttings 13

7.0 Exceptions to Protocol Procedures 13

8.0 Base Support Requirements 13

9.0 Project Schedule 14

10.0 Points of Contact 15

11.0 References 15

FIGURES

		Page
1.1	Site Locations With Respect To Base	2
3.1	Site Layout SWMU #70	4
3.2	Proposed Vent Well, Monitoring Point, and Blower Locations SWMU #70	7
3.3	Proposed Injection Vent Well Construction Detail SWMU #70	8
3.4	Proposed Monitoring Point Construction Detail SWMU #70	9
3.5	Typical Blower System Instrumentation Diagram for Air Injection SWMU #70	11

DRAFT

BIOVENTING PILOT TEST WORK PLAN FOR SWMU #70 - OIL/WATER SEPARATOR NO. 326 CANNON AFB, NEW MEXICO

1.0 INTRODUCTION

This work plan presents the scope of multiphase bioventing pilot tests for *in situ* treatment of fuel-contaminated soils at solid waste management unit (SWMU) #70 - Oil/Water Separator No. 326 at Cannon Air Force Base (AFB), New Mexico. The location of the sites with respect to the base is shown on Figure 1.1. The pilot test will be performed by Engineering-Science, Inc. (ES). The three primary objectives of the proposed pilot test are: 1) to assess the potential for supplying oxygen throughout the contaminated soil interval, 2) to determine the rate at which indigenous microorganisms will degrade fuel when supplied with oxygen-rich soil gas, and 3) to evaluate the potential for sustaining these rates of biodegradation until fuel contamination is remediated to concentrations below regulatory standards.

The pilot test will be conducted in two phases. The initial phase will consist of construction of a vent well (VW) and vapor monitoring points (MPs), *in situ* respiration testing, and an air permeability test. This initial test phase is expected to take approximately 3 weeks. During the second phase, the bioventing system will be operated and monitored over a 1-year period.

If bioventing proves to be an effective means of remediating soil contamination at this site, pilot test data may be used to design a full-scale remediation system and to estimate the time required for site cleanup. An added benefit of the pilot testing at this site is that a significant amount of the fuel contamination should be biodegraded during the 1-year pilot test, as the testing will take place within highly contaminated soils at the site.

Additional background information on the development and recent success of the bioventing technology is found in the document entitled *Test Plan and Technical Protocol for a Field Treatability Test for Bioventing* (Hinchee et al., 1992). This protocol document will serve as the primary reference for pilot test well designs and the detailed procedures to be used during the test.

In addition to the bioventing pilot test at SWMU #70, soil gas sampling will be performed at Facility 187 (Figure 1.1) to determine if contaminated soils are oxygen deficient.

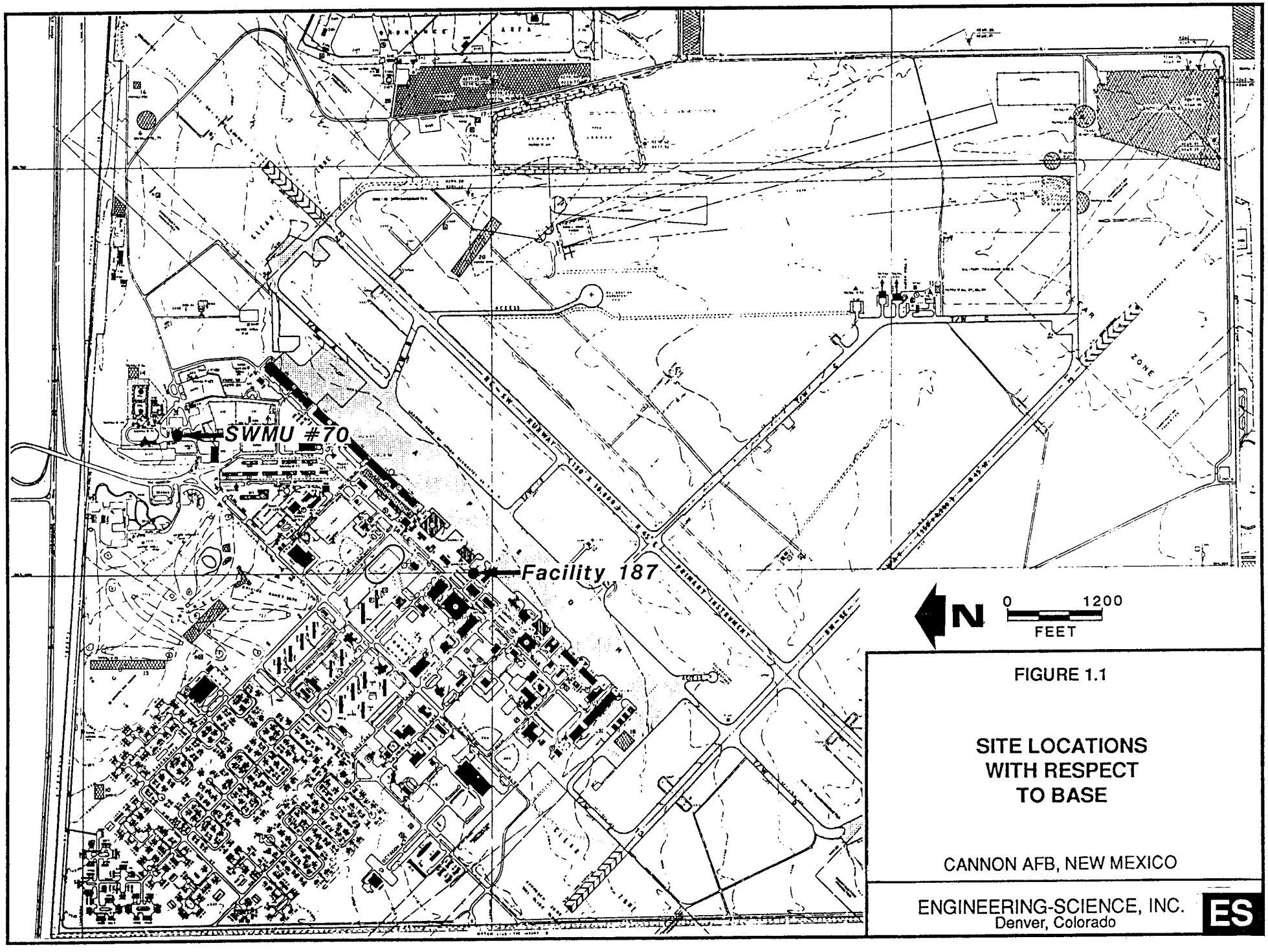

FIGURE 1.1

SITE LOCATIONS WITH RESPECT TO BASE

CANNON AFB, NEW MEXICO

ENGINEERING-SCIENCE, INC.
Denver, Colorado

ES

2.0 FACILITY 187

2.1 Site Description

Facility 187 is an operational jet fuel tank that feeds a jet fuel dispenser north of the apron and west of Building 170. During excavation for footings for a new canopy at the dispenser, soil contamination was detected. Soil was excavated to approximately 15 feet below ground surface (bgs) in the vicinity of the dispenser.

Soil near the bottom of the excavation was contaminated to 1580 part per million (ppm) total recoverable petroleum hydrocarbons (TRPH). The source of the contamination beneath the dispenser is unknown. Soils were excavated above and around the tank and contamination in that area was attributed to overfilling the tank. Halon tests indicated the tank was not leaking.

Due to safety, financial, and time constraints, further excavation and tank removal was not performed. Prior to back filling, 6 4-inch Schedule 40 polyvinyl chloride (PVC) perforated pipes were installed around the tank. Additionally, 2 6-inch Schedule 40 PVC perforated pipes were installed at the fuel dispenser. The excavation was backfilled with clean pea gravel.

2.2 Soil Gas Sampling Activities

During the site visit in December 1993, soil gas was sampled from the 6-inch perforated PVC pipes and ambient oxygen concentrations were detected. During pilot testing activities at SWMU #70 additional soil sampling at Facility 187 will be performed. Soil gas samples will be collected from the perforated pipes at both the tank and dispenser locations to determine if soils are oxygen deficient. Additionally, soil gas probes may be driven inside the PVC vent pipes into contaminated soils. This will allow soil gas sampling of contaminated soils beneath the limits of the excavation instead of sampling clean backfill. All soil gas samples will be analyzed with field instruments for oxygen, carbon dioxide, and petroleum hydrocarbons. The results will be available to the base point of contact (POC) following completion, and will be included in the interim bioventing pilot test results report.

3.0 SWMU #70 - OIL/WATER SEPARATOR NO. 326

3.1 Site Description

3.1.1 Site History and Location

SWMU #70 - Oil/Water Separator No. 326 is located in the north part of Cannon AFB, north of Building 326. The location of SWMU #70 with respect to the base is shown in Figure 1.1. The SWMU was used for the recovery of petroleum products generated from wash water effluent from JP-4 fuel truck maintenance operations at Building 326. This effluent contained JP-4 fuel, and petroleum and synthetic lubricating oils. The site proposed for the bioventing pilot study is located in the immediate vicinity of Oil/Water Separator No. 326 (Figure 3.1).

The oil/water separator, active since 1960, is a two-compartment underground unit with a 50-gallon oil/water separator compartment and a detached 220-gallon underground oil storage tank. Recovered petroleum products were directed to the 220-

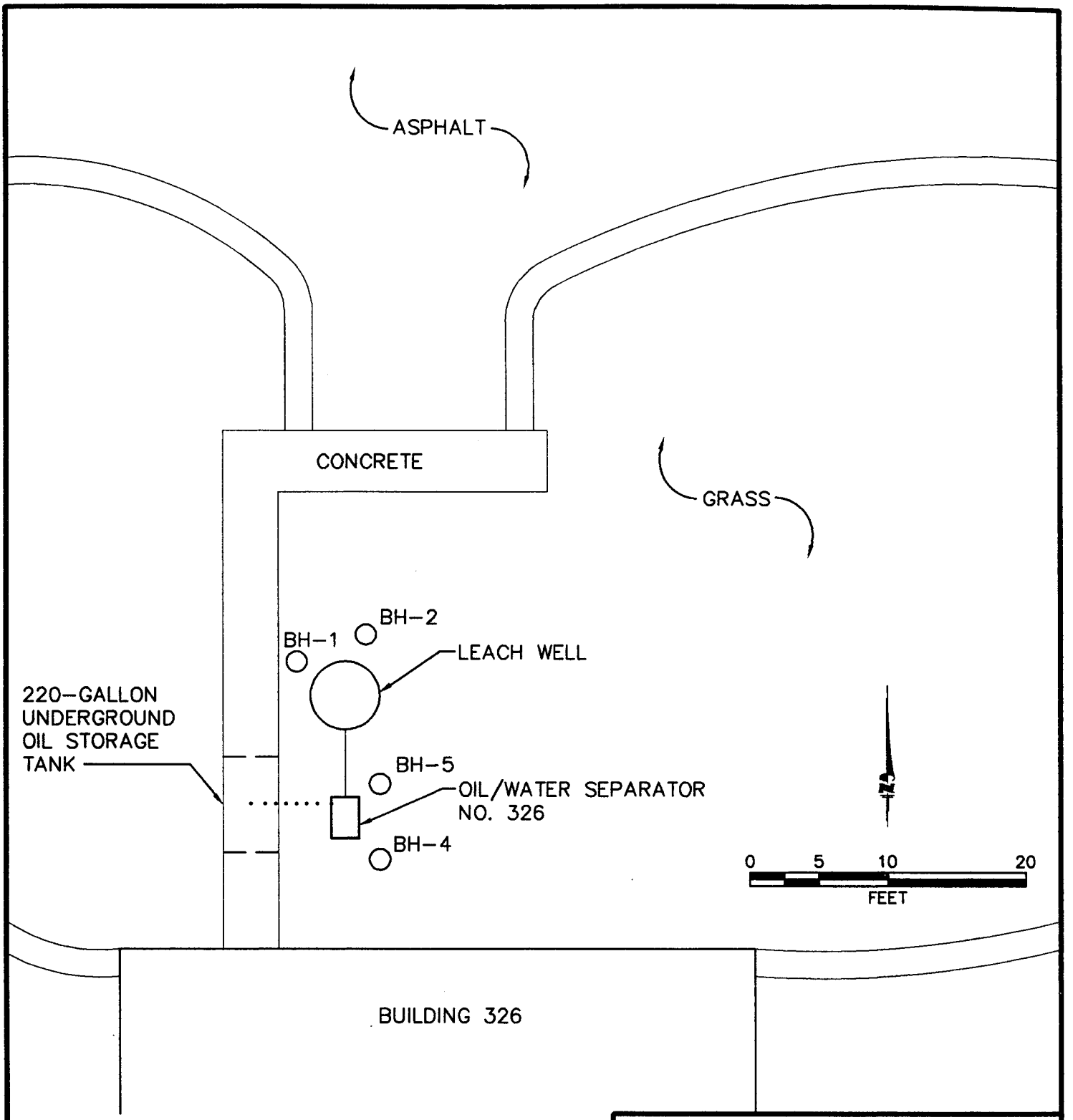

LEGEND

BH-2 ○ PREVIOUS SOIL BORING

····· 2" PIPE

FIGURE 3.1

SITE LAYOUT
SWMU #70

CANNON AFB, NEW MEXICO

ENGINEERING-SCIENCE, INC.

Denver, Colorado

93DN1421, 12/29/93 at 10:30

gallon holding tank and the wastewater was discharged into a leach well. The leach well is approximately 5 feet in diameter and 5 feet deep (Figure 3.1). Overflows from the oil/water separator that discharged into the leach well are the suspected source of contamination. The oil/water separator was recently removed from service by plugging the drain line from Building 326.

3.1.2 Site Geology

Because the bioventing technology is applied to unsaturated soils, this section will primarily discuss soils above the deep aquifer. Soils at SWMU #70 consist of clayey silt with sand lenses to approximately 38 feet below ground surface (bgs), and very stiff calcareous silty sand from approximately 38 to approximately 60 feet bgs. Soils from approximately 60 to 320 feet bgs consist of sand, sandstone, and silt of the Ogallala Formation. Groundwater is encountered at a depth of approximately 270 feet bgs and generally flows southeastward.

3.1.3 Site Contaminants

The primary soil contaminants at this site are fuel-related petroleum hydrocarbons which have been detected in the soils at depths ranging from 0 to 60 feet bgs. Soil sampling at this site has been conducted to a depth of only 58.5 feet bgs, and therefore the vertical extent of hydrocarbon contamination has not been defined. Total petroleum hydrocarbons (TPH) were detected at 19,200 milligrams per kilogram (mg/kg) in soil boring BH-2 at a depth of 4 to 6 feet bgs (Figure 3.1). In BH-1 at a depth of 58 feet bgs, TPH were detected at 5,710 mg/kg. Total benzene, toluene, ethylbenzene, and xylenes (BTEX) were detected in samples collected from the soil borings at concentrations ranging from nondetect to 1,815 mg/kg (Woodward-Clyde Consultants, 1993).

3.2 Pilot Test Activities

The purpose of this section is to describe the pilot test activities to take place at SWMU #70. The proposed locations and construction details for the central VW and vapor MPs are discussed. The blower configuration that will be used to inject air (oxygen) into contaminated soils is also discussed in this section. Finally, a brief description of the pilot test procedures is provided.

The bioventing technology is intended to remediate contamination only in the unsaturated zone. Therefore, pilot test activities will be confined mainly to unsaturated soils. Because site investigation information is limited, the central VW and MPs will be completed to a depth to be determined in the field based on visual observations and soil sample headspace readings. The VW will be completed to a depth corresponding to the assumed extent of contamination so that oxygen will be provided to the deepest levels of contamination. If ground water is encountered, the VW will be completed approximately 5 feet into the ground water to allow for seasonal water level fluctuations. No dewatering will take place during the pilot test.

Existing monitoring wells will not be used as primary air injection or vapor MPs. However, monitoring wells which have a portion of their screened interval above the water table may be used to measure the composition of background soil gas.

3.2.1 Layout of Pilot Test Components

A general description of criteria for siting a central VW and vapor MPs is included in the protocol document (Hinchee et al., 1992). Figure 3.2 illustrates the proposed locations of the central VW and MPs at this site. The final locations of these wells may vary slightly from the proposed locations if significant fuel contamination is not observed in the boring for the central VW. Based on previous site investigation data and a site visit, the VW should be located approximately 20 feet north of Building 326, near the northwest side of the leach well. Soils in this area are expected to be TPH contaminated and oxygen depleted (< 2%), and biological activity should be stimulated by oxygen-rich soil gas ventilation during pilot test operations.

Due to the extensive depth of contamination at this site, the potential for moderately-permeable soils, and the experience ES has had with similar soil types, the potential radius of venting influence around the central VW is expected to be 30 to 40 feet. Three vapor MPs (MPA, MPB, and MPC) will be located within a 35-foot radius of the central VW (Figure 3.2).

3.2.2 Vent Well

The VW will be constructed of 4-inch-diameter Schedule 40 polyvinyl chloride (PVC), with 0.04-inch slotted screen set from 8 feet bgs to a depth to be determined in the field. Flush-threaded PVC casing and screen with no organic solvents or glues will be used. The filter pack will be clean, well-rounded silica sand with a 6-9 grain size, and will be placed in the annular space to 1 foot above the screened interval. A 5-foot-thick bentonite seal will be placed directly over the filter pack to produce an air-tight seal above the screened interval. The bentonite seal, consisting of granular bentonite, will be placed in 6-inch layers, with each layer hydrated in place with potable water prior to the addition of subsequent layers. The remaining annular space will then be filled to 1 foot bgs with a bentonite/cement grout. A complete seal is critical to prevent injected air from short-circuiting to the surface during the bioventing test. The VW will be completed in a 12-inch flush-mount water-tight well box. Figure 3.3 illustrates the proposed central VW construction detail for this site.

3.2.3 Monitoring Points

A typical multidepth vapor MP installation for this site is shown in Figure 3.4. Soil gas oxygen and carbon dioxide concentrations will be monitored at up to five depths. The final depths of the screens may vary slightly from the proposed depths if significant fuel contamination is not observed at the specified interval. The vapor probes (screens) may be placed such that one probe will monitor each of the following layers: friable soils (5-foot depth); shallow loose caliche soils (25-foot depth); deeper very firm caliche soils (50-foot depth); and two probes in the deeper sand, sandstone, and silt materials. Soil temperature will be monitored using thermocouples installed at the upper and lower point at MPA. Multidepth monitoring will confirm that the entire soil profile is receiving oxygen and will be used to measure fuel biodegradation rates at all depths.

Each MP will be constructed with up to five vapor probes placed within sand intervals, separated by bentonite seals. Vapor probes, constructed of 6-inch-long

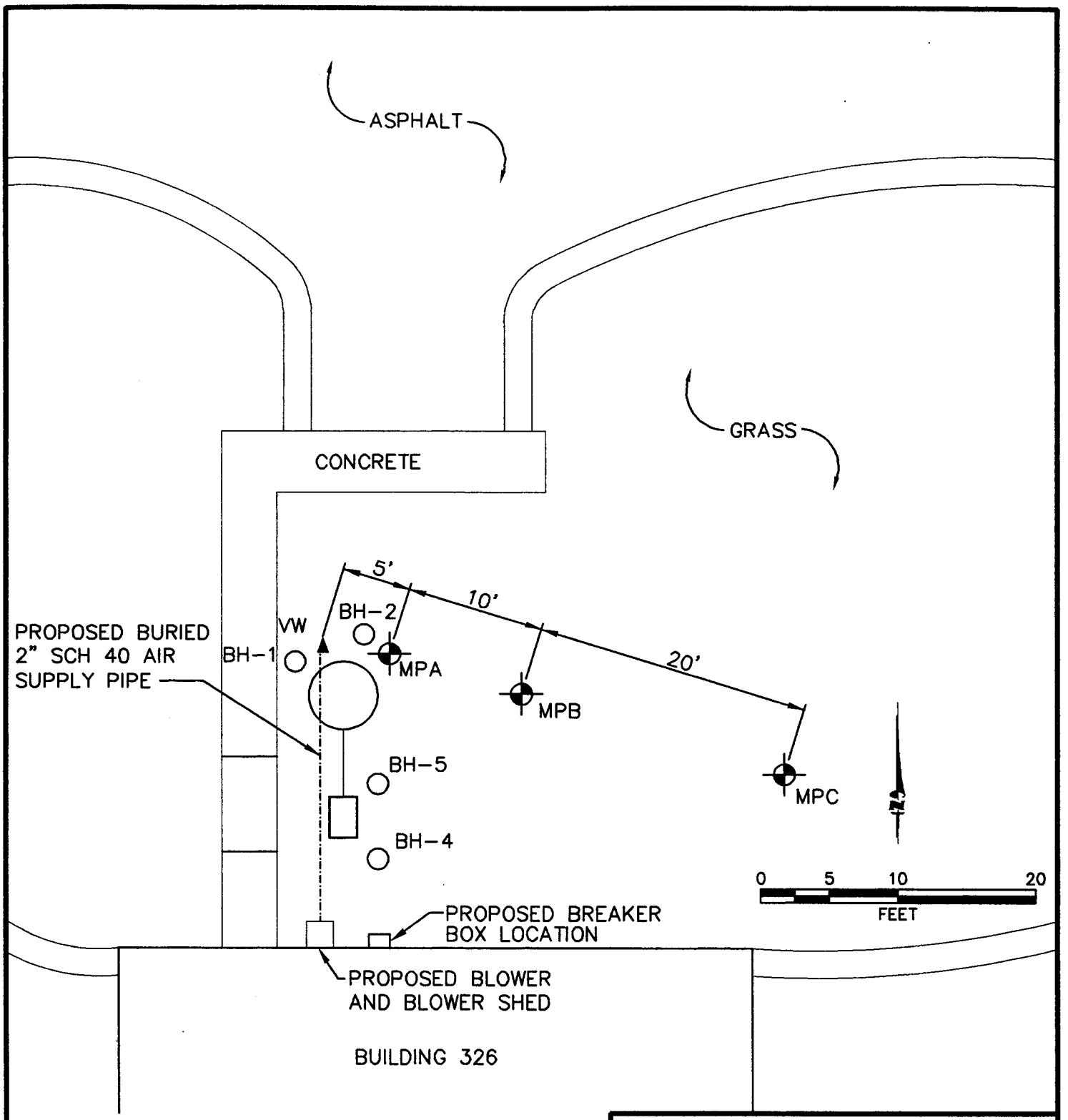

LEGEND

BH-2 ○ PREVIOUS SOIL BORING

MPC ⊕ MONITORING POINT

VW ▲ VENT WELL

FIGURE 3.2

PROPOSED VENT WELL, MONITORING POINT, AND BLOWER LOCATIONS SWMU #70

CANNON AFB, NEW MEXICO

ENGINEERING-SCIENCE, INC.

Denver, Colorado

93DN1422, 01/05/94 at 10:52

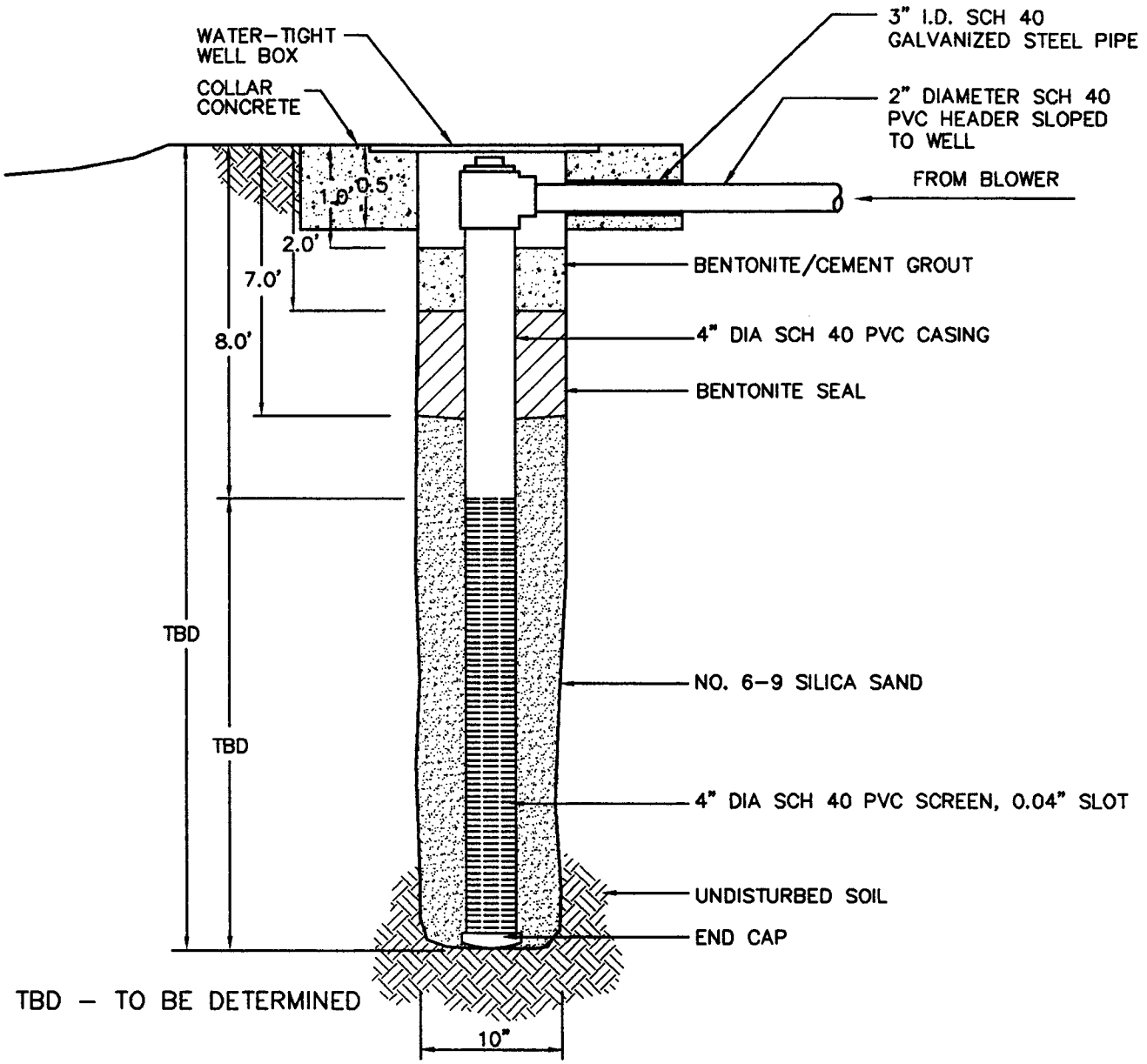

NOT TO SCALE

FIGURE 3.3

PROPOSED INJECTION VENT WELL CONSTRUCTION DETAIL SWMU #70

CANNON AFB, NEW MEXICO

ENGINEERING-SCIENCE, INC.

Denver, Colorado

93DN1423, 12/29/93 at 11:00

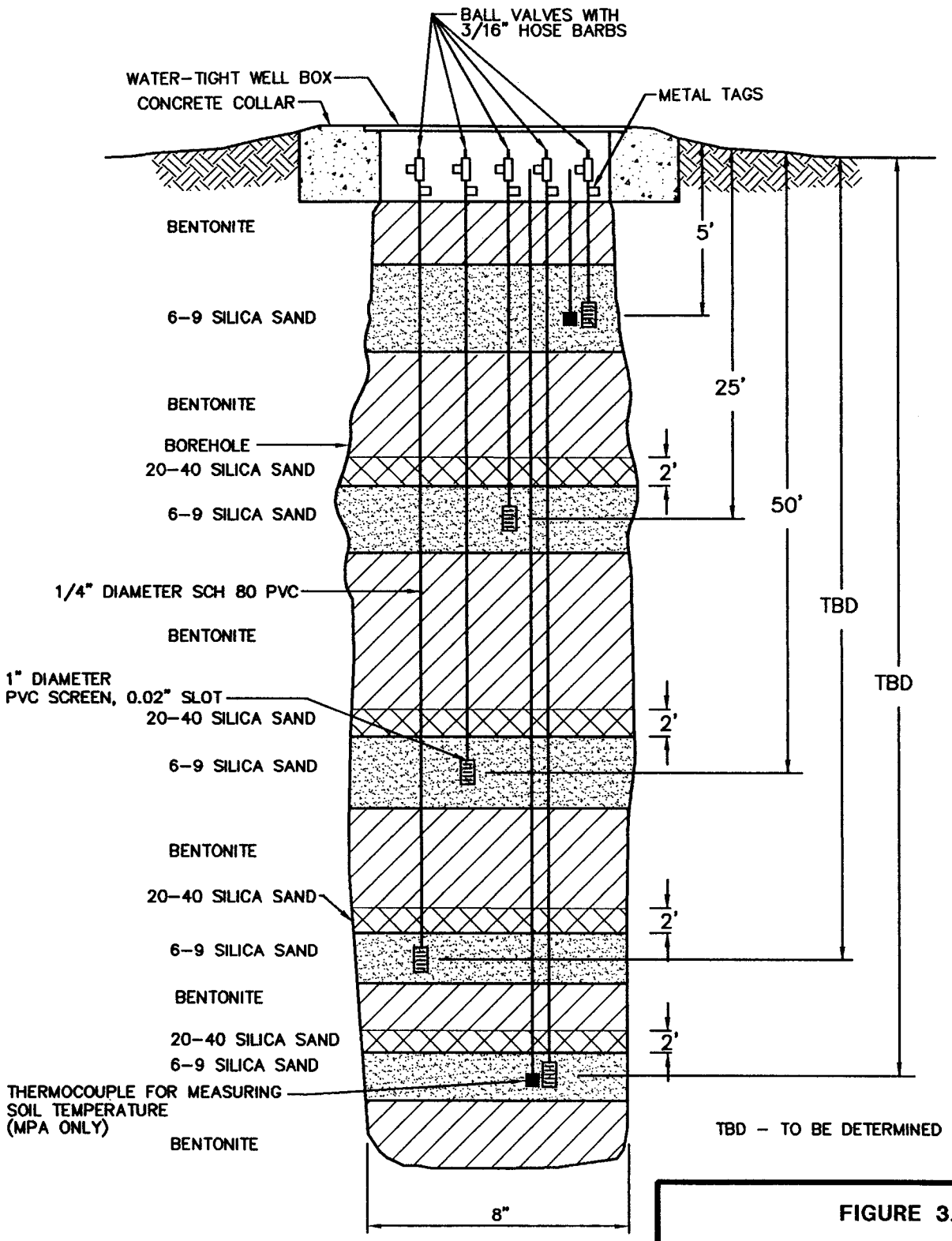

NOT TO SCALE

FIGURE 3.4

PROPOSED MONITORING POINT CONSTRUCTION DETAIL SWMU #70

CANNON AFB, NEW MEXICO

ENGINEERING-SCIENCE, INC.

Denver, Colorado

93DN1424, 12/29/93 at 11:22

sections of 1-inch-diameter, 0.02-inch-slotted PVC well screen, will be placed within a 2-foot layer of 6-9 silica sand and 0.25-inch Schedule 80 PVC will extend to the surface. A 2-foot layer of 20-40 silica sand will be placed above the 6-9 silica sand for all probes except at the 5-foot interval to ensure bentonite does not foul the probes. The annular spaces between the five screened MP intervals will be sealed with bentonite to isolate the monitoring intervals. The bentonite seals will consist of granular bentonite hydrated in place. The bentonite within 2 feet above and below the sand intervals will be placed in approximately 6-inch layers and hydrated with potable water prior to placement of subsequent layers to assure complete saturation and hydration of the bentonite. The top of each 0.25-inch PVC riser from the probes will be completed with a 0.25-inch ball valve. The ball valve assemblies and thermocouple plugs will be protected within a 12-inch flush-mount, water-tight well box set in concrete. Additional details on VW and MP construction are presented in Section 4 of the protocol document (Hinchee et al., 1992).

3.2.4 Blower System

A 3-horsepower positive-displacement blower capable of injecting air over a wide range of flow rates and pressures will be used to conduct the initial air permeability test. Figure 3.5 is a schematic of a typical air injection system used for pilot testing. The maximum power requirement anticipated for this pilot test is 230-volt, single-phase, 30-amp service. Additional details on power supply requirements are described in Section 8.0, Base Support Requirements.

3.2.5 Air Permeability Test

The objective of the air permeability test is to determine the extent of the subsurface that can be oxygenated using one VW. Prior to initiating the test, baseline concentrations of oxygen, carbon dioxide, and total volatile hydrocarbons (TVH) will be measured in soil gas from the VW and each MP screened interval.

Air will be injected into the VW using the blower unit, and pressure response will be measured at each MP with differential pressure gauges to determine the region influenced by the unit. Oxygen will also be monitored in the MPs to ascertain whether oxygen levels in the soil increase as the result of air injection. One air permeability test lasting 4 to 24 hours will be performed at this site.

3.2.6 *In Situ* Respiration Test

The objective of the *in situ* respiration test is to determine the rate at which soil bacteria degrade petroleum hydrocarbons. Respiration tests will be performed at every vapor MP where bacterial biodegradation of hydrocarbons is indicated by low initial oxygen levels and elevated carbon dioxide concentrations in the soil gas. Using 1-standard-cubic-foot-per-minute (scfm) pumps, air will be injected into approximately four MP depth intervals containing low levels (<2%) of oxygen. A 20-hour air injection period will be used to oxygenate local contaminated soils. At the end of the 20-hour injection period, the air supply will be cut off, and oxygen, carbon dioxide, and TVH concentrations will be monitored for the following 48 to 72 hours. The decline in oxygen and increase in carbon dioxide concentrations over time will be used to estimate rates of bacterial degradation of fuel residuals. Helium will also be injected

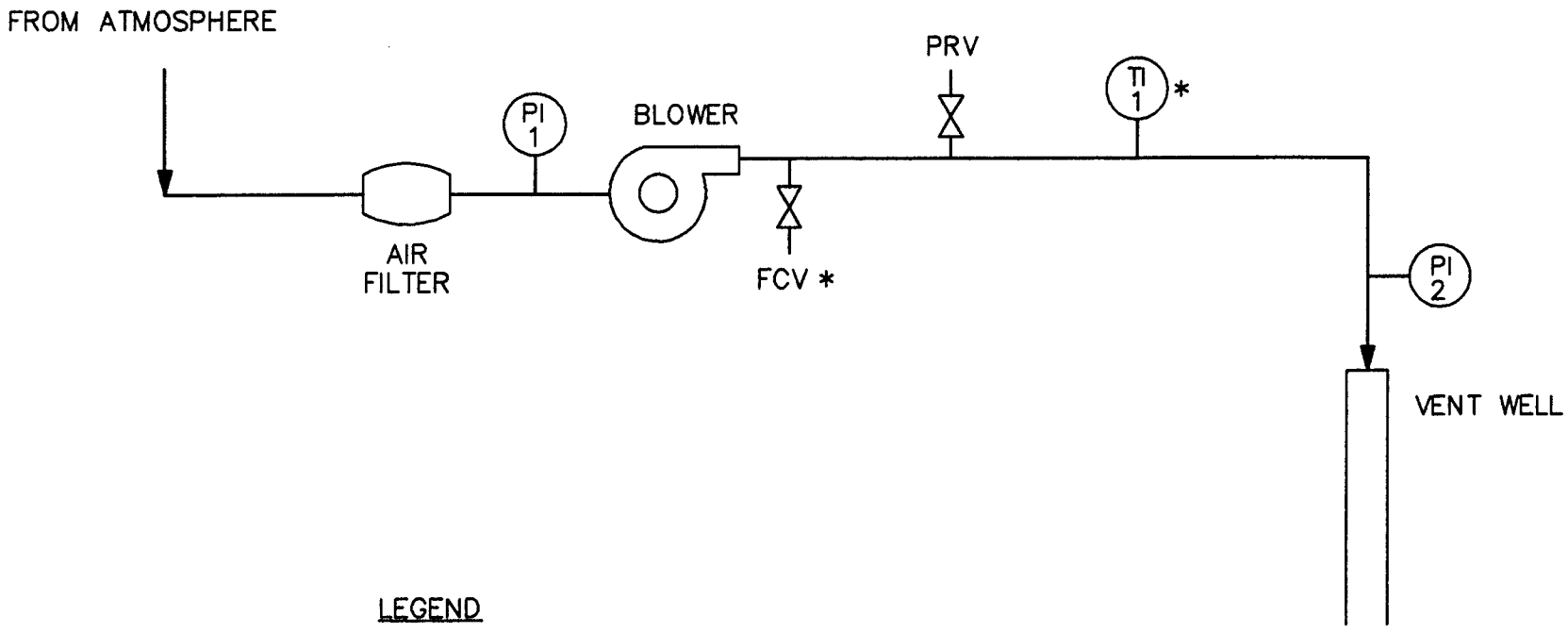

LEGEND

PI 1 PRESSURE INDICATOR

TI 1 TEMPERATURE INDICATOR

FCV FLOW CONTROL VALVE

PRV PRESSURE RELIEF VALVE

* OPTIONAL

FIGURE 3.5

TYPICAL BLOWER SYSTEM INSTRUMENTATION DIAGRAM FOR AIR INJECTION SWMU #70

CANNON AFB, NEW MEXICO

ENGINEERING-SCIENCE, INC.

Denver, Colorado

93DN1425, 12/29/93 at 11:27

into the selected MP intervals to determine the effectiveness of the bentonite seals. Additional details on the *in situ* respiration test procedures are provided in Section 5.7 of the protocol document (Hinchee et al., 1992).

3.2.7 Extended Pilot Test Bioventing System

An extended, 1-year bioventing system also will be installed at SWMU #70. The system will be chosen based upon the results of the initial respiration and air permeability tests. However, it is anticipated that the extended test blower will be capable of flow rate in the range of 50-70 scfm and will not exceed 2.5 horsepower. A base electrician will be requested to wire the blower to line power. The blower will be housed in a small, prefabricated shed to provide protection from the weather.

The system will be in operation for 1 year, and every 6 months ES personnel will conduct an *in situ* respiration test to monitor the long-term performance of this bioventing system. Weekly system checks will be performed by Cannon AFB personnel. If required, major maintenance of the blower unit will be performed by ES personnel. Detailed blower system information and a maintenance schedule will be included in the operation and maintenance (O&M) manual to be provided to the base. More detailed information regarding the test procedures can be found in the protocol document.

4.0 BACKGROUND MONITORING POINT

The construction of an additional vapor MP may be required to measure background levels of oxygen and carbon dioxide and to determine if natural carbon sources are contributing to oxygen uptake during the *in situ* respiration test. This background MP would be installed in an area of uncontaminated soil and in the same or similar stratigraphic formations as the MPs to be installed. The background well would be similar in construction to the MPs (Figure 3.4), and would be screened at two or more depths. ES will require some assistance from Cannon AFB in selecting an appropriate location for the proposed background MP within 200 feet of a 110-volt power source.

Existing groundwater monitoring wells located in areas with no fuel contamination may be suitable for use as background MPs. These wells must have a portion of their screened interval above the water table, and initial soil gas samples must contain oxygen in excess of 15 percent to be used as background MPs. Additional information regarding background MPs may be found in Section 4.3 of the protocol document (Hinchee et al., 1992).

5.0 SOIL AND SOIL GAS SAMPLING

5.1 Soil Samples

Four soil samples will be collected from the pilot test area during the installation of the VW and MPs. Sampling procedures will follow those outlined in the protocol document. One sample will be collected from the most contaminated interval of the VW boring, and one sample will be collected from the interval of highest apparent contamination in each of the borings for the three MPs. A total hydrocarbon vapor analyzer will be used during augering to screen split-spoon soil samples for intervals of high fuel contamination. Soil samples will be analyzed for total recoverable petroleum

hydrocarbons (TRPH), BTEX, soil moisture, pH, particle sizing, alkalinity, total iron, and nutrients.

Soil samples for laboratory analysis will be collected using a split-spoon sampler containing brass tube liners. Soil samples collected in the brass tubes will be immediately trimmed, and the ends will be sealed with Teflon® fabric held in place by plastic caps. Soil samples will be labelled following the nomenclature specified in the protocol document (Section 5), wrapped in plastic, and placed in a cooler maintained at a temperature of 4 degrees centigrade for shipment. A chain-of-custody form will be filled out, and the cooler will be shipped to the PACE, Inc. laboratory in Huntington Beach, California for analysis. This laboratory has been audited by the Air Force and meets all quality assurance/quality control and certification requirements for the State of California.

5.2 Soil Gas Samples

Initial and final soil gas samples will be collected in 1-liter SUMMA® cannisters in accordance with the Bioventing Field Sampling Plan (Engineering-Science, Inc., 1992) from the VW and from the MPs closest to and furthest from the VW. Additionally, these soil gas samples will be used to predict potential air emissions, to determine the reduction in BTEX and TVH during the 1-year test, and to detect any migration of these vapors from the source area.

Soil gas sample canisters will be placed in a small cooler and packed with foam pellets to prevent excessive movement during shipment. Samples will not be sent on ice to prevent condensation of hydrocarbons. A chain-of-custody form will be filled out, and the cooler will be shipped to the Air Toxics, Inc. laboratory in Folsom, California for analysis.

6.0 HANDLING OF DRILL CUTTINGS

Drill cuttings from all VW and MP borings will be collected in U.S. Department of Transportation (DOT) approved containers. The containers will be labeled and placed in the Cannon AFB hazardous materials storage area. These drill cuttings will become the responsibility of Cannon AFB, and will be analyzed, handled, and disposed of in accordance with the current procedures for ongoing remedial investigations. This project could generate up to 90 55-gallon drums of cuttings.

7.0 EXCEPTIONS TO PROTOCOL PROCEDURES

The procedures that will be used to measure the air permeability of the soil and *in situ* respiration rates are described in Sections 4 and 5 of the protocol document (Hinchee et al., 1992). No exceptions to the protocol procedures are anticipated.

8.0 BASE SUPPORT REQUIREMENTS

The following base support is needed prior to the arrival of the drilling subcontractor and the ES pilot test team:

- Assistance in obtaining drilling and digging permits.

- Assistance in selecting a suitable location for the background MP. The background well location should be in an area with no fuel contamination and with similar stratigraphy to that of the bioventing pilot test sites. Preferably, 110-volt receptacle power will be available within 200 feet of the background MP location.
- Installation of a new power distribution panel or breaker box at Building 326 near the sidewalk (Figure 3.2). This location will require explosion-proof wiring and receptacles. The panel should include 230-volt, 30-amp, single-phase service with one 230-volt receptacle and two 115-volt receptacles.
- Provision of any paperwork required to obtain gate passes and security badges for approximately two ES employees and three drillers. Vehicle passes will be needed for one ES truck and trailer, and for the drill rig and service truck.

During the initial testing, the following base support is needed:

- Parking space for one 8- x 20-foot laboratory and equipment trailer located as close to each pilot test area as practical.
- A decontamination pad or other designated area where the driller can clean augers between borings.
- Acceptance of responsibility by Cannon AFB for drill cuttings from VW and MP borings, including additional sampling, to determine disposal options. ES will provide the results of TRPH and BTEX soil analysis to help characterize drill cuttings.
- Twelve square feet of desk space and a telephone in a building located as close to the sites as practicable.
- The use of a facsimile machine for transmitting 15 to 20 pages of test results.

During the 1-year extended pilot test, base personnel will be required to perform the following activities:

- Check the blower system once per week to ensure that it is operating and to record the air-injection pressure and temperature. Change air filters and blower lubricants when required. ES will provide a brief training session on these procedures and an O&M manual.
- If the blower stops working, notify Mr. Brian Blicker, Mr. John Hall, or Mr. Doug Downey, ES-Denver, at (303) 831-8100, or Mr. Patrick Haas, Air Force Center for Environmental Excellence (AFCEE), at (210) 536-4314.
- Arrange site access for an ES technician to conduct *in situ* respiration tests approximately 6 months and 1 year after the initial pilot tests, and for any blower system repairs or modifications.

9.0 PROJECT SCHEDULE

The following schedule is contingent upon timely approval of this pilot test work plan.

Event	Date
Draft Pilot Test Work Plan to AFCEE/Cannon AFB	12 January 1994
Begin Initial Pilot Test	7 February 1994
Complete Initial Pilot Test	25 February 1994
Interim Results Report	1 April 1994
6-Month Respiration Test	August 1994
Final Respiration Test	February 1995

10.0 POINTS OF CONTACT

Mr. John Ekhoff
27 Civil Engineering Squadron
Cannon AFB, NM 88103-5136
DSN 681-4639 or 2739
COM (505) 784-4639

Mr. Patrick Haas
AFCEE/EST
Brooks AFB, TX 78235-5000
DSN 240-4314
COM (210) 536-4314

Mr. Doug Downey
Engineering-Science, Inc.
1700 Broadway, Suite 900
Denver, CO. 80290
(303) 831-8100
Fax (303) 831-8208

11.0 REFERENCES

Engineering-Science, Inc. 1992. *Field Sampling Plan for AFCEE Bioventing*. January.

Hinchee, R.E., S.K. Ong, R.N. Miller, D.C. Downey, and R. Frandt. 1992. *Test Plan and Technical Protocol for a Field Treatability Test for Bioventing*. January.

Woodward-Clyde Consultants. 1993. *RCRA Facility Investigation, Appendix 3 SWMUs, Phase 1, Cannon Air Force Base, New Mexico*. November