CAF B 95

Steve P ✓
Barbara A
file ✓

DEPARTMENT OF THE AIR FORCE

HEADQUARTERS 27th FIGHTER WING (ACC)
CANNON AIR FORCE BASE, NEW MEXICO

ENTERED

23 JAN 1995

JAN 1995 RECEIVED HAZARDOUS WASTE PROGRAM

W.P. Ard, Colonel, USAF
Commander, 27th Support Group
100 S DL Ingram Blvd Suite 200
Cannon AFB NM 88103-5136

Mr. William Honker
US EPA Region VI
1445 Ross Avenue Suite 1200
Dallas TX 75202-2733

Dear Mr. Honker

XIII

The Draft Appendix I, Phase III RCRA Facility Investigation (RFI) workplans are attached for your review and approval. This RFI is for IRP site SD-11 contamination discovered during the Jul 94, removal of two oil-water separators and one oil storage tank.

If you have any questions, please contact Mr. John Constantine at (505) 784-4348.

W.P. ARD, Colonel, USAF
Commander, 27th Support Group

Attachment:
Appendix I, Phase III RFI Workplans

cc:
NMED (B. Hoditschek)
HQ ACC CES/ESVW w/o Atch (M. Calvert)

DRAFT WORK PLAN SWMUs 86-90

LIBRARY COPY

RCRA FACILITY INVESTIGATION APPENDIX I SITE SD-11

CANNON AIR FORCE BASE, NEW MEXICO

Prepared for
U.S. Department of the Army
Corps of Engineers, Omaha District
Omaha, Nebraska

January 1995

C3M11MM

TABLE OF CONTENTS

Section		Page
1.0	INTRODUCTION	1-1
2.0	RFI OBJECTIVES	2-1
2.1	DATA QUALITY OBJECTIVES	2-1
2.2	SITE-SPECIFIC OBJECTIVES	2-2
2.2.1	Description of Site SD-11	2-2
	Previous Investigations	2-2
2.2.3	Phase II Objectives	2-5
3.0	DECISION PROCESS	3-1
3.1	DESCRIPTION OF THE DECISION PROCESS	3-1
3.1.1	Decision Process	3-2
3.2	PRELIMINARY DEVELOPMENT OF EXPOSURE PATHWAY FLOW CHARTS	3-5
3.3	CRITICAL DATA	3-7
3.3.1	Critical Data at Site SD-11	3-8
3.4	DETECTION LIMITS	3-8
3.5	SCREENING-LEVEL HEALTH RISK EVALUATION METHODOLOGY	3-9
3.5.1	Derivation of Screening Criteria	3-9
3.6	BASELINE RISK ASSESSMENT	3-10
4.0	FIELD SAMPLING PROCEDURES	4-1
4.1	PURPOSE AND SCOPE	4-1
4.2	REGULATORY FRAME WORK	4-1
4.3	SITE SD-11	4-2
4.3.1	Sampling Objectives	4-2
4.3.2	Sample Locations, Frequencies, and Analysis	4-3
4.3.3	Sample Designation	4-5

Section		Page
4.3.4	Sampling Equipment and Procedures	4-7
4.3.5	Sample Handling, Documentation, and Analysis	4-8
5.0	REFERENCES	5-1

LIST OF TABLES

TABLE 1-1 APPENDIX I SWMUs CONTAINED IN SITE SD-11
TABLE 4-1 PROJECTED SOIL SAMPLING BREAKDOWN SITE SD-11
TABLE 4-2 PROJECTED GROUNDWATER SAMPLING BREAKDOWN SITE SD-11
TABLE 4-3 SAMPLE CONTAINERS, PRESERVATION, AND HOLDING TIMES FOR SOIL SAMPLES
TABLE 4-4 SAMPLE CONTAINERS, PRESERVATION, AND HOLDING TIMES FOR GROUNDWATER SAMPLES
TABLE 4-5 VOLATILE ORGANICS BY GC/MS EPA METHOD 8240
TABLE 4-6 SEMIVOLATILE ORGANICS BY GC/MS EPA METHOD 8270
TABLE 4-7 METALS BY EPA METHODS 6010 AND 7000
TABLE 4-8 ORGANOCHLORINE PESTICIDES AND PCBs BY EPA METHOD 8080
TABLE 4-9 HERBICIDES BY EPA METHOD 8150

LIST OF FIGURES

FIGURE 1-1 VICINITY MAP
FIGURE 2-1 SITE PLAN, SD-11
FIGURE 2-2 PREVIOUS BORINGS SITE PLAN, SD-11
FIGURE 3-1 CANNON AFB, DECISION DIAGRAM FOR PHASE II INVESTIGATION OF SITE SD-11
FIGURE 3-2 EXPOSURE PATHWAY FLOW CHART, SITE SD-11
FIGURE 4-1 PROPOSED BORINGS, SD-11

1.0
INTRODUCTION

This Work Plan details the work to be done for a Phase II Resource Conservation and Recovery Act (RCRA) Facility Investigation (RFI) to be completed at Installation Restoration Program (IRP) Site SD-11 located on Cannon Air Force Base (Cannon AFB) near Clovis, New Mexico. Site SD-11 includes five solid waste management units (SWMUs) 86-90. The vicinity map of Cannon AFB and location of Site SD-11 is shown on Figure 1-1. The five SWMUs (see Table 1-1) are part of the Appendix I list of SWMUs at Cannon AFB. Prior to the work outlined in this Work Plan, the following listed environmental investigative activities had been completed at Cannon AFB:

- IRP Records Search - CH2M Hill - 1983
- Preliminary Review/VSI Report - RCRA Facility Assessment - A.T. Kearney - 1987
- RCRA Facility Investigation Work Plan for 27 SWMUs - Lee Wan and Associates, Inc. - 1990
- RI Investigation - Appendix I SWMUs - W-C - 1991-1992 (18 SWMUs called "First Third")
- RFI - Landfills 1 and 2 - W-C - 1992-1993
- RFI - Appendix II SWMUs - through USACE, Albuquerque, NM - 1993
- RFI - Appendix III SWMUs - W-C - 1993

This Work Plan follows the USACE specified guidance from the United States Environmental Protection Agency (USEPA) entitled "RCRA Facility Investigation (RFI) Guidance, Volumes 1-4, EPA 530/SW-89-031, May 1989. This Work Plan includes the following components:

- Field Sampling Plan (FSP)
- Quality Assurance Project Plan (QAPP) Addendum (Appendix A)
- Site Safety and Health Plan (SSHP) Addendum (Appendix B)

The overall intent of the Phase II RFI is to obtain the additional data necessary to sufficiently characterize the presence or absence of contamination to either support recommendations from Phase I RFI studies, support recommendations for further studies, or recommend "no further action" if warranted. The data collected during the Phase II RFI will be used to evaluate human health risks. The specific objectives of the Phase II RFI to be completed at Cannon AFB are to:

- Characterize the physical setting and vertical extent of potential contamination associated with each SWMU

- Perform a screening-level risk evaluation of human health risks associated with chemicals found at the site

- Develop recommendations for the site regarding further evaluations or no further action

This Work Plan provides details on the investigation of Site SD-11 and how the data collected will be used to support recommendations. Refer to the Work Plan (W-C 1993) for detailed discussions on: Cannon AFB site characteristics, Data Quality Objectives (DQO) process, behavior of contaminant plumes and contaminant migration pathways. The Phase II field effort is a continuation of earlier investigations, so the 1993 Work Plan rationale and data quality requirements remain the same.

TABLE 1-1

APPENDIX I SWMUs CONTAINED IN SITE SD-11

SWMU Number	Site Description
86	Engine Test Cell
87	Oil/Water Separator and Overflow Pit
88	Engine Test Cell Overflow Pit and Leaching Field
89	Leach Field/Evaporation Pond
90	Oil/Water Separator and Overflow Pit

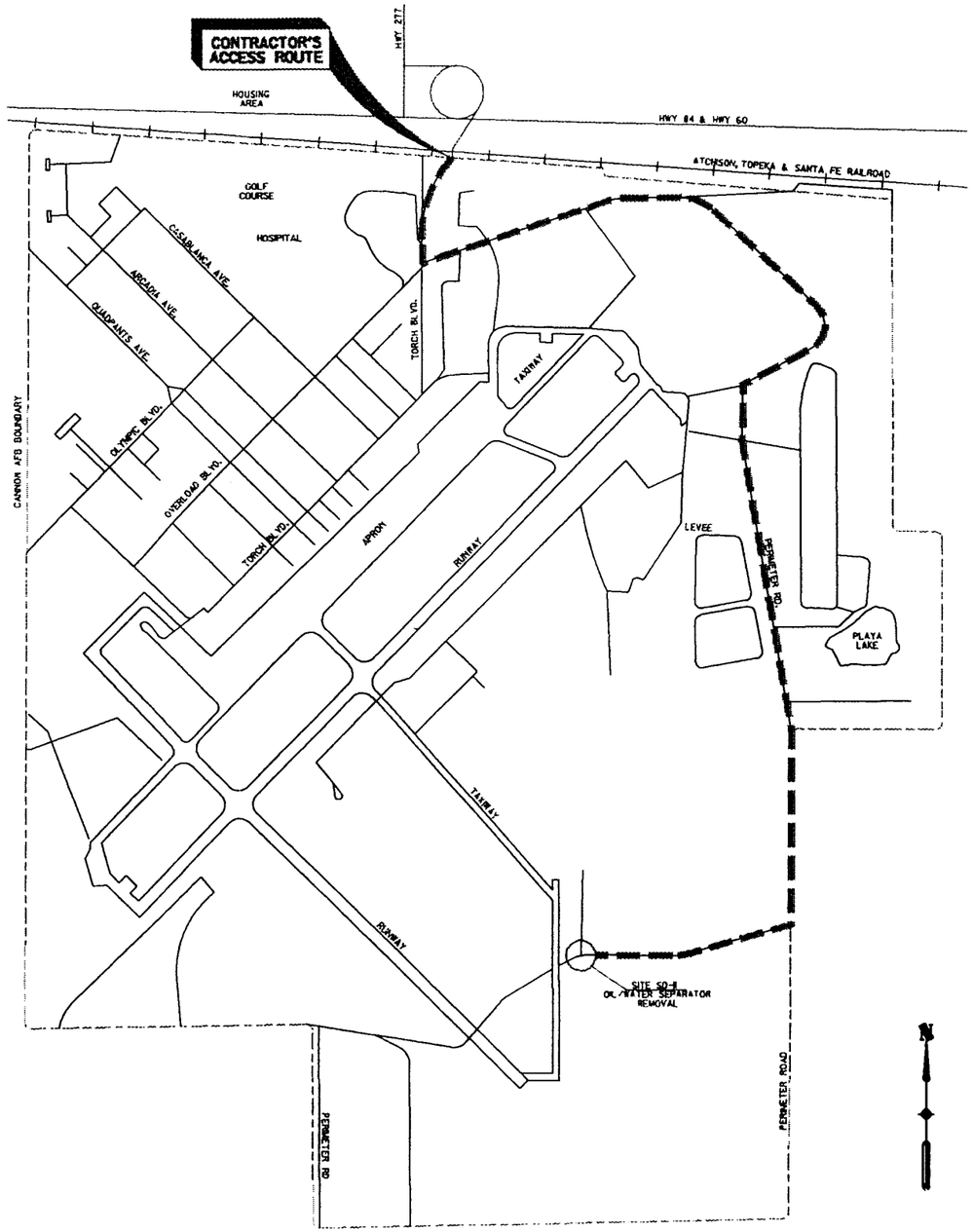

LOCATION PLAN
NO SCALE

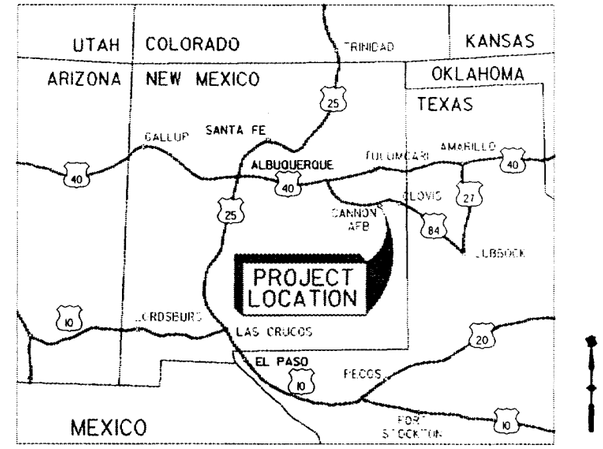

VICINITY MAP
NO SCALE

Woodward-Clyde ENGINEERING & SCIENCES APPLIED TO THE EARTH & ITS ENVIRONMENT	CANNON AFB NEW MEXICO OIL-WATER SEPARATOR REMOVAL		
U.S. ARMY ENGINEER DISTRICT CORPS OF ENGINEERS OMAHA, NEBRASKA	VICINITY MAP		
	SIZE	DWG NO. CN01P301.DGN	FIG NO. 1-1	REV
	SCALE: NONE		SHEET OF

2.0
RFI OBJECTIVES

The overall objective of this investigation is to evaluate whether or not a release of site-related chemicals has occurred which could pose a significant risk to human health or the environment. The focus of the Phase II RFI is the investigation of the potential vertical extent of soil contamination that may have resulted from current or historical activities at Site SD-11 located on Cannon AFB. The site plan of Cannon AFB with Site SD-11 location is shown on Figure 1-1.

2.1 DATA QUALITY OBJECTIVES

The following DQOs were developed for the Phase I RFI and are applicable to the continuation of this investigation during Phase II:

- Collect environmental data of sufficient quality and quantity to characterize the nature and extent of contamination resulting from a release of SWMU-related chemicals to the degree that the potential for significant risk to human health or the environment can be determined.

- Collect environmental data of sufficient quality and quantity to evaluate the potential for releases to migrate toward receptors in all significant pathways as determined from conceptual modeling.

- Collect environmental data of sufficient quality to be used in a Health and Environmental Assessment, and collect data of sufficient quantity to address all appropriate exposure pathways.

- Collect environmental data of sufficient quality and quantity to support a recommendation of "no further action," if warranted, following the evaluation of the findings of the investigation.

- Collect data of a quality that can be used as part of any required follow-on study including a Corrective Measures Study.

2.2 SITE-SPECIFIC OBJECTIVES

2.2.1 Description of Site SD-11

Site SD-11 was active from 1965 to 1988. The site consisted of a jet-engine test cell, an oil/water separator with an associated 100 gallon collection tank, an overflow pit, and a leach field which was later converted to an evaporation pond (Figure 2-1). The jet-engine test cell was covered by a 50 foot by 10 foot building resting on a concrete slab. The jet-engine test cell, its' cover building, and a small pump house building have been removed leaving only a bare concrete slab. The oil/water separator system has also been subsequently removed.

The separate areas at the site received potential contaminants from a single operation, the steam cleaning and testing of jet aircraft engines. It has also been reported that jet engines had water injected into the exhaust during testing to help muffle noise. Contaminants that were expected to be present at the site included lubricating and synthetic oils, residual JP-4 fuel, and dirt.

During the life span of the facility effluent was handled in several ways. Initially it was discharged only to an overflow pit (SWMU No. 87). Then the oil/water separator system (SWMU No. 90) was installed with discharge to a leach field (SWMU No. 88). Finally, the effluent was routed through the oil/water separator to an evaporation pond (SWMU No. 89). The evaporation pond was constructed in the area of the former leach field.

2.2.2 Previous Investigations

A Phase I IRP Records Search was performed in 1983 by CH_2M Hill to identify and fully evaluate suspected problems associated with past hazardous material disposal sites and spill sites at Cannon AFB (CH_2M Hill 1983). During the records search, the existence and potential for migration of hazardous material contaminants was evaluated at the Engine Test Cell Area (Site SD-11) by reviewing the existing information and conducting an analysis of installation records. Results of the Phase I IRP Records Search recommended that potable

well 9 be analyzed for priority pollutants to determine if the groundwater had been impacted by activities at the site.

During 1984-1985, a Phase II IRP investigation was conducted by Radian Corporation at the site. Two boreholes were drilled to depths of 35 and 50 feet, respectively (Figure 2-2). One borehole (11B) was located within the leachfield, and another (11A) was located in a depression which had collected overflow from the oil/water separator. Five soil samples taken from the boreholes were analyzed for purgeable halocarbons and aromatics, oil and grease, and lead. Results of the samples collected during the Radian investigation indicated no soil contamination at the IRP/SWMU (Radian 1986). Based on the results of the Phase II (Stage I) investigation, additional soil sampling was recommended due to the limited number of borings drilled in the area.

In 1987, a Preliminary Review/Visual Site Inspection, RCRA Facility Assessment was conducted for the USEPA at Cannon AFB by A.T. Kearney, Inc. (A.T. Kearney 1987). The purpose of this investigation was to identify and evaluate Solid Waste Management Units to assess the potential for releases to the environment of hazardous wastes or constituents. Results of this investigation identified the site as a potential SWMU. The RCRA Facility Assessment also indicated that the potential for releases to the soil was high due to the past disposal of hazardous wastes and the unlined nature of the IRP/SWMU site. The potential for releases to groundwater was considered to be lower due to the presence of caliche layers possibly inhibiting downward migration of hazardous constituents. Suggested further action was to conduct soil sampling to determine if contaminants had been released from the unit.

In December 1989, five soil borings (Borings B1 through B5), shown in Figure 2-2, were drilled by Walk, Haydel and Associates and analyzed for volatile organic compounds (VOCs), xylene, base/neutral organics, and total metals (WHA 1990). Borehole 1 was drilled to a depth of 30 feet in the vicinity of the oil/water separator overflow pit. Boreholes 2, 3 and 4 were drilled to depths of 30 feet each immediately adjacent to the west, north, and east, respectively, of the existing evaporation pond. Borehole 5 was drilled to a depth of 60 feet immediately south. Analytical results indicated very low levels of phenol, 2,2'-methylene bis[6-1,1-(dimethylethyl)-4-ethyl-] (known as antioxidant 425) in boreholes B-1 and B-4. Silver was the only metal detected at levels exceeding background. However, the distribution of silver was considered by Lee Wan and Associates (1990) to be naturally occurring.

In September 1991, Woodward-Clyde (W-C) investigated the site as part of the RI for 18 IRP/SWMU sites at Cannon AFB. The objective for sampling at the site during the investigation by W-C was to further evaluate the nature and extent of potential hazardous contaminants. Six soil borings (Borings 0861 through 0866) were drilled and surface and subsurface samples collected for chemical and geotechnical analysis. The soil borings were located near the Engine Test Pad and the old oil/water separator (Figure 2-2). Surface samples were collected from 0 to 0.5 feet BGS at locations near each of the soil borings. Subsurface soil samples were collected at depths ranging from 2 to 23 feet BGS. All soil samples were analyzed for Target Compound List (TCL) volatile organic compounds (VOCs) and target analyte list (TAL) metals.

The volatile organic chemicals acetone and toluene were detected above the laboratory contract required quantitation limit (CRQL) at the site (W-C 1992). Toluene was detected at a concentration of 100 μg/kg in the background boring 0865, located to the west of the IRP/SWMU site. Toluene concentrations detected in samples from the other soil borings were significantly less than this concentration. In addition to acetone and toluene, petroleum hydrocarbons appear to be present from 10 to 20 feet BGS in boring 0861, located near the oil/water separator. The lateral extent of petroleum hydrocarbon contamination was not determined, but it was assumed to be limited to the area around the northern side of the oil/ water separator since no petroleum hydrocarbon staining was observed at boring location 0863, southeast of the oil/water separator.

Metals were detected at concentrations that appear to be above background levels in the upper 4 feet in all soil borings drilled by W-C at the site. In general, higher metal concentrations were detected in surface soil samples. The two borings located near the oil/water separator had results indicating lower concentrations of metals in the surface soil compared to the borings located near the concrete pad of the former engine test cell. The background soil boring (boring 0865) had metal concentrations which were lower than samples collected at the above locations.

In summary, the results of the 1991 RI performed by W-C indicated the presence of acetone, toluene, and petroleum hydrocarbons in the surface and subsurface soils. Metals were also detected in the soils at levels above site and/or regional background levels. Analysis of the data collected during the 1991 RI suggested that the vertical extent of petroleum hydrocarbon

constituents is most likely limited to the upper 20 feet of subsurface soils. The results of a baseline risk assessment (BRA) indicated that no significant impacts to human health or the environment existed at the site. Because of the presence of petroleum hydrocarbons and the possibility of required action under New Mexico Environment Department (NMED) Applicable or Relevant and Appropriate Requirements (ARARs), it was decided to remove the oil/water separator system and excavate to clean soil.

In August 1994, Remediation Services Incorporated (RSI) removed the oil/water separator system and excavated the petroleum contaminated soil. An area 60 feet long by 30 feet wide by 25 feet deep was excavated (Figure 2-5). Soil samples were taken from the stockpiled soil periodically with approximately 186 tons of excavated soil transported to an off-site facility. Because of concerns about residual contamination in the stockpiled soil, the remaining soil was mixed with off-site soil and used to backfill the excavation.

RSI reported that the oil/water separator did not appear to be sealed along the bottom and at the edges and that petroleum contamination was visible after removing approximately 1 foot of soil at the site.

2.2.3 Phase II Objectives

During the removal actions associated with Site SD-11 visible staining was reported at depths of approximately 20 feet bgs. The most recent investigation (W-C 1992) only included soil borings to depths of 25 feet bgs. The Phase II investigation will include up to seven new soil borings up to a depth of 100 feet bgs. Up to six soil samples will be collected for chemical analysis from the surface to the bottom of each boring. Additionally, one soil sample will be collected for microbial plate counts from each of the six borings. Chemical analysis will include volatile organic compounds (VOCs), semivolatile organic compounds (SVOCs), TAL metals, and total recoverable petroleum hydrocarbons (TRPH). Samples selected for chemical analysis will be based on headspace screening and immunoassay screening (for TPH) results collected in the field.

New data collected during the Phase II RFI investigation will be used to complete a screening-level risk evaluation and to characterize the vertical extent of soil contamination. The results of this evaluation will be the basis for recommending either further evaluation or no further action.

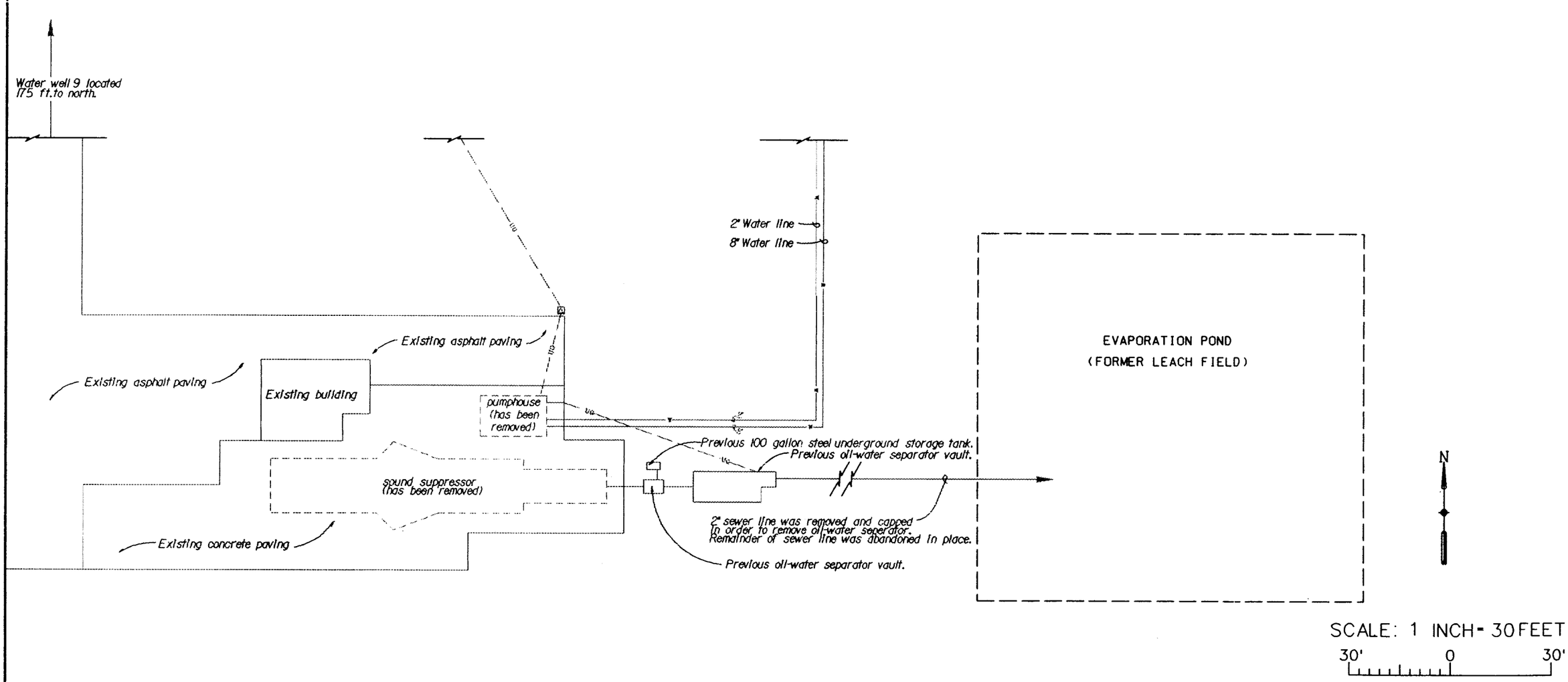

Woodward-Clyde ENGINEERING & SCIENCES APPLIED TO THE EARTH & ITS ENVIRONMENT	CANNON AFB		NEW MEXICO
	OIL-WATER SEPARATOR REMOVAL		
U.S. ARMY ENGINEER DISTRICT CORPS OF ENGINEERS OMAHA, NEBRASKA	**SITE PLAN** **SD-11**		
	SIZE	DWG NO. CN02SITE.DGN	FIG. NO. 2-1	REV
	SCALE: NONE		SHEET OF

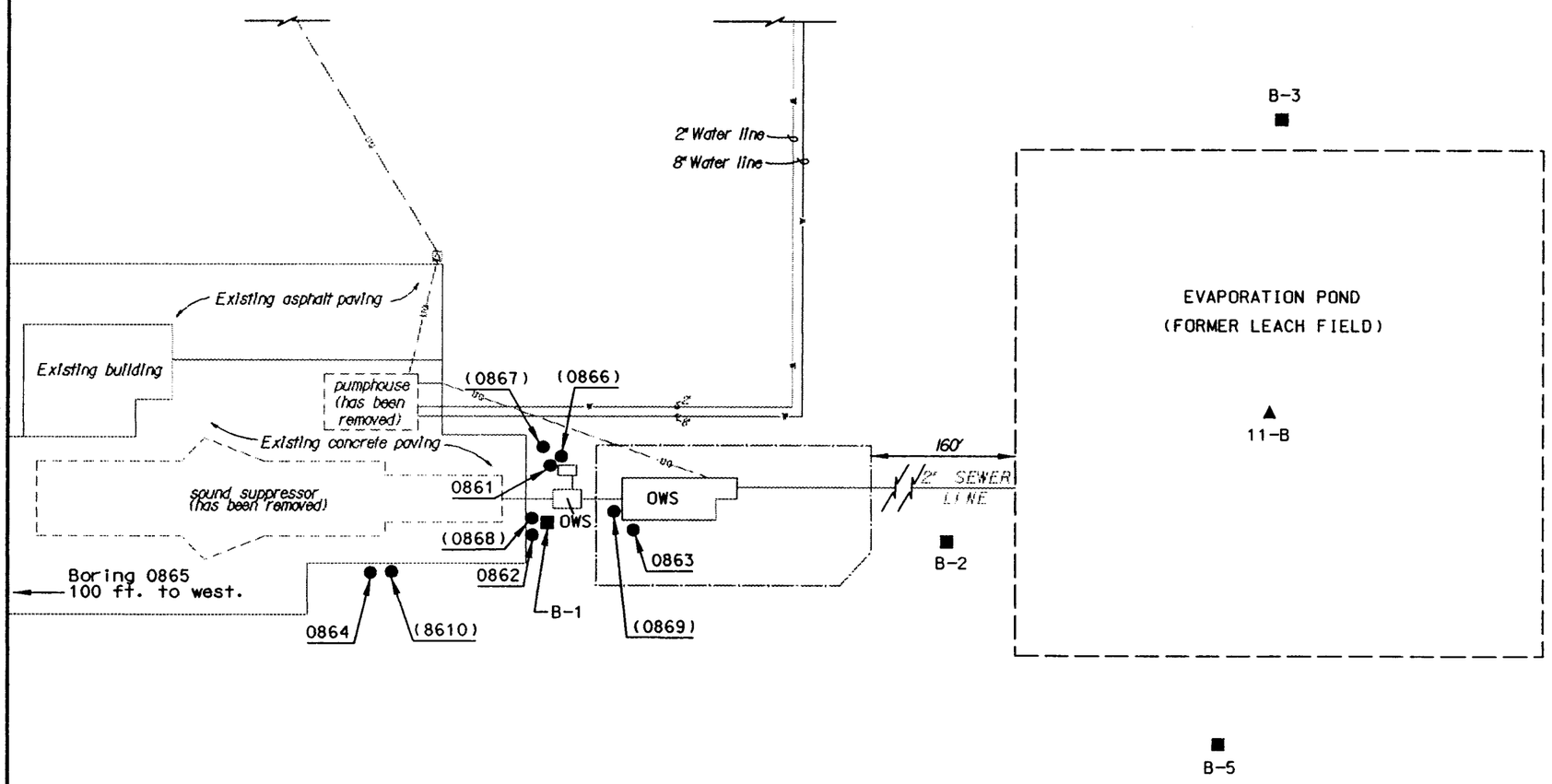

LEGEND

▲ 11-B — RADIAN 1984-1985 FIELD INVESTIGATION SOIL BORING LOCATION

■ B-4 — WALK, HAYDLE & ASSOCIATES 1987 FIELD INVESTIGATION SOIL BORING LOCATION

● 8610 — WCC 1991 FIELD INVESTIGATION SOIL BORING LOCATION

NOTE:

BORING NUMBERS IN PARENTHESES INDICATE REDRILL/RESAMPLE OF ORIGINAL BORING

EXCAVATION AREA

N

SCALE: 1 INCH = 30 FEET

30' 0 30'

Woodward-Clyde
ENGINEERING & SCIENCES APPLIED TO THE EARTH & ITS ENVIRONMENT

U.S. ARMY ENGINEER DISTRICT
CORPS OF ENGINEERS
OMAHA, NEBRASKA

CANNON AFB NEW MEXICO
OIL-WATER SEPARATOR REMOVAL

PREVIOUS BORINGS
SITE PLAN
SD-11

SIZE	DWG NO.	FIG. NO.	REV
	CN01SITE.DGN	2-2	

SCALE: NONE SHEET OF

3.1 DESCRIPTION OF THE DECISION PROCESS

The following decision process has been used to assess the data needs and investigative approach for the Site SD-11. The DQO evaluation process is designed to provide data of sufficient quality and quantity to evaluate whether a release has occurred that could pose a risk to human health or the environment and to evaluate the need for further evaluation such as collection of additional data, completion of a Baseline Risk Assessment (BRA), or possibly completion of a Corrective Measure Study. The procedures to assess the data needs and investigative approach include:

- Collect soil data to characterize the nature and extent of contamination that has been released, including an evaluation of the potential for chemicals of concern to be transported to the groundwater at concentrations that may pose a human health threat.

- Evaluate analytical results and determine chemicals of concern

- Evaluate potential impact to groundwater by determining if the vertical distribution of contamination decreases with depth. If it does not significantly decrease, it may not be possible to evaluate the impact to groundwater; so further investigation may be required.

- Compare maximum detected soil concentrations of chemicals of concern to conservative risk-based concentrations (RBCs) to evaluate whether a release has occurred that may pose an unacceptable risk to human health or the environment in the present or future.

- If the concentration of any site-related chemicals of concern exceed RBCs, the potential for adverse health effects (including potential cumulative risks based

on RBCs) will be evaluated, and further evaluation may be required, which may include a BRA.

- If the vertical extent has been defined and concentrations of site-related chemicals of concern do not exceed RBCs, the concentration of contaminants will be considered insignificant and, therefore, no further investigation will be recommended.

A decision diagram (Figure 3-1) was developed for the Cannon AFB RFI Site SD-11 to present a logical decision process that will be used to evaluate the data resulting from the investigation to assure that project objectives are met.

3.1.1 Decision Process

The RFI soils investigation decision process is designed to identify appropriate actions based on three alternative actions: no further action, interim action, and further investigation or evaluation. The recommendation for the selection of alternative action will depend upon whether chemicals of concern are detected in soils at levels that may pose an unacceptable risk to human health or the environment. This section provides a summary of the decision-making process that will be used.

The decision process will be implemented by first evaluating and summarizing existing historical information and analytical data collected. Historical information will be used to identify potential chemicals of concern and to identify potential sites of chemical release.

Environmental media will be sampled and analyzed for potential chemicals of concern. The analyte lists from which chemicals of concern will be selected are discussed in the QAPP Addendum (Appendix A). Site-related chemicals of concern will be selected based on the results of the sampling program. Metals that do not exceed background levels, and chemicals which are attributable to field or laboratory contamination, will not be included as chemicals of concern. Organic chemicals that do not have EPA-established toxicity factors will not be evaluated quantitatively, but their potential contribution to site risks will be evaluated qualitatively.

The potential for site-related contaminants to impact groundwater will be assessed by evaluating the vertical distribution of contaminants in the soil column. If the concentrations of chemicals of concern decrease significantly with depth, and the concentrations are below levels that are likely to migrate to groundwater (based on fate and transport properties of the contaminant and the vadose zone), the potential for transport to groundwater will be considered to be insignificant. If the concentrations do not decrease with depth, further investigation of the groundwater pathway will be recommended. If the concentrations are at levels that could potentially migrate to groundwater at concentrations of concern, fate and transport modeling will be done to evaluate the potential for contaminant transport to groundwater.

Concentrations of chemicals of concern detected will be evaluated for potential human health and environmental risks by comparing maximum detected concentrations (which are higher than concentrations to which people or ecological receptors would routinely be exposed) to highly conservative (protective) health risk-based concentrations. This conservative approach permits identifying sites that pose no unacceptable risk under highly conservative exposure assumptions and that, therefore, warrant no further evaluation or action. The approach also permits identification of sites that may warrant further evaluation based on exceedance of stringent risk-based concentrations. The methods used in the screening-level human health risk evaluations are presented in Section 3.5.

The results of this evaluation will be used to make recommendations regarding the three alternatives stated above. The recommendations will be made on the following basis:

- If the vertical extent of contamination has been defined, no threat to human health exists based on comparison of maximum concentrations to RBCs, and no potential threat to the environment is apparent, then no further action will be recommended.

- If an unacceptable threat to human health or the environment is imminent, a source is well defined, and a source control is readily identified, an interim action to control the source will be recommended.

- If there is a potential significant threat to human health or the environment, further investigation will be recommended for the site. Further investigation may include additional field investigation and/or a risk assessment.

Figure 3-1 presents the decision diagram that will be followed for this investigation. The steps of the decision process are described below.

Step 1: Evaluate analytical results to identify chemicals of concern (COCs). COCs are defined as chemicals whose concentrations exceed background levels, that are potentially site-related, and that are not attributable to field or laboratory contamination.

Step 2: Evaluate the potential impact to groundwater by assessing the vertical distribution of contamination. If concentrations of chemicals of concern do not decrease significantly with depth, the impact to groundwater cannot be assessed, so further investigation of the groundwater pathway will be recommended. Consult with project managers to develop investigation approach to evaluate the potential for contaminants to be transported to groundwater. If the concentrations of COCs are at a level that could potentially be transported to groundwater at concentrations of concern, fate and transport modeling will be used to estimate groundwater concentrations. Go to Step 3. If the concentrations of chemicals of concern decrease significantly with depth and the concentrations are below levels that could be transported to groundwater at concentrations of concern, further investigation of the groundwater pathway will not be recommended. Go to Step 4.

Step 3: Compare the estimated groundwater concentrations to groundwater RBCs. If they do not exceed RBCs, the groundwater pathway will be concluded to be insignificant.

Step 4: Compare the maximum soil concentrations detected at the site with RBCs. If no concentrations of COCs exceed RBCs, then no further investigation of site soils will be recommended. If any COCs are detected at concentrations that exceed RBCs, proceed to Step 5.

Step 5: Evaluate potential cumulative risks at the site based on the RBC comparisons. If the potential cumulative risks are within acceptable ranges, no further investigation of the site will be recommended. If a potential for unacceptable risks is indicated, proceed to Step 6.

Step 6: Complete a baseline risk assessment for all complete pathways. If there is not an unacceptable risk calculated, no further evaluation of the site will be recommended. If there is an unacceptable risk at the site, a RCRA Corrective Action Plan will be implemented.

3.2 PRELIMINARY DEVELOPMENT OF EXPOSURE PATHWAY FLOW CHARTS

The initial step in the evaluation of the site is the development of an Exposure Pathway Flow Chart (EPFC), which provides a framework for evaluating potential risks associated with the site, aids in the identification of data needs, and assists in the identification of appropriate preliminary remediation goals targeted to significant exposure pathways. Upon completion of the field sampling program, the EPFC will be reviewed and modified (if necessary) in order to re-evaluate the site, taking into consideration the analytical results and fate and transport properties of site-related chemicals.

Figure 3-2 show the EPFC with chemical sources and potential human exposure pathways typical of the site. The EPFC presents chemical release sources and transport media, potential human receptors, and intake mechanisms for each potential exposure pathway. An exposure pathway describes the means by which release, transport, and intake by receptor populations of site-related chemicals of concern occurs. An exposure pathway consists of four necessary elements:

- A source and mechanism of chemical release to the environment
- An environmental transport medium for the released chemical (e.g., air, groundwater, or surface water)

- A point of potential human exposure to transported chemicals (e.g., a domestic drinking water well)

- A human intake mechanism (e.g., inhalation or ingestion) at the point of exposure

All four elements must be present for an exposure pathway to be complete and for chemical exposure to occur. In the EPFC, potentially significant pathways are denoted with solid lines, and pathways that are considered to be insignificant relative to other pathways are denoted with dashed lines.

Potential exposure pathways are evaluated with respect to potential chemical sources at the site. Exposure pathways are considered to be potentially complete if there are chemical release and transport mechanisms and identified exposure points and receptors for that exposure pathway. Incomplete exposure pathways do not result in actual exposure to human or environmental receptors and, therefore, do not pose a potential risk. Incomplete exposure pathways are not shown on the EPFC. Insignificant pathways are those that could conceivably be complete and result in an exposure, but the resulting exposure would undoubtedly be at levels that would not pose a significant risk.

The potential sources of chemical emissions from the site are presented in Figure 3-2. This site includes an engine test cell, oil/water separator, and leach field which are potential sources for petroleum hydrocarbons and solvents. The primary source is generally waste (e.g., fuels, oils, and solvents) that has leaked into subsurface soils or has been discharged or spilled on surface soil.

Chemicals from the primary source may be transported away from the primary source area, affecting other media that may in turn act as secondary sources. Percolation and leaching of the wastes to the subsurface soil are shown as primary chemical release mechanisms. Subsurface soils are an important secondary source of potential chemical release. Site-related chemicals in soils may infiltrate/percolate through the soil and be released to groundwater.

Other release mechanisms, such as direct contact (soil ingestion and dermal contact), surface runoff, wind erosion, or volatilization to the atmosphere, are also depicted in the EPFC. A

portion of the may be covered with clean soil or pavement; therefore, surface transport of chemicals by storm water runoff would be limited. Transport by storm runoff is not considered a significant pathway for human exposure at underground oil/water separators or underground storage tanks because the contamination at these areas is primarily in the subsurface. Where the site is covered by pavement, soil exposures will only be considered potentially significant for future-use scenarios (i.e., if the pavement is removed).

3.3 CRITICAL DATA

Critical data are data that are crucial for decision-making (e.g., whether a site requires no further investigation or should be carried into a CMS). Critical data may be from special sampling locations or from a selected subset of samples from locations of roughly equal importance. Data from a specific field sample such as a sediment sample immediately downstream of a discharge point, may be designated as critical if it were necessary to know contaminant concentrations at that specific location for source or exposure pathway characterization. In other cases, data from a selected number of any of several field samples (e.g., a subset of all the surface soil samples taken at a site), may be designated as critical when the objective is to estimate mean contaminant concentrations over the area.

Following EPA guidelines (EPA 1989a), critical data must be from environmental media representing each major exposure pathway and must be 100 percent complete, that is, valid results must be obtained for all data deemed critical. A complete set of critical data may be taken from more than one sample (i.e., if one sample has missing or rejected analytes, data from another comparable sample can be used to complete the critical data set). If the missing or rejected data do not affect the decision-making process (e.g., they are not potential chemicals of concern), they are not considered to be critical data, and the critical data set is still 100 percent complete. If decisions cannot be made because of missing or rejected data, a recommendation will be made that the project managers determine what corrective action should be taken. Potential chemicals of concern are defined as chemicals that are site-related (i.e., they are derived from the site and are at concentrations that exceed background levels); and that have EPA-derived toxicity factors (i.e., carcinogenic slope factors or noncarcinogenic RfDs) or that have potential toxicity that can be addressed qualitatively (e.g., lead and TPH). Potential chemicals of concern will be derived from the analyte list described in the QAPP Addendum (Appendix A). This procedure permits retaining valid data from the original data

set and compiling a complete, representative, and valid set of critical data without unnecessary resampling. A discussion of the selection of critical data is provided below.

3.3.1 Critical Data at Site SD-11

The following data have been determined to be critical at Site SD-11. That is, complete, representative, and valid sets of data must be collected as indicated below.

- One complete set of data from the surface/near-surface soil
- One complete set of data below the area of highest contamination such that the vertical extent of contamination can be defined

3.4 DETECTION LIMITS

Risk-based decisions often require sample quantitation limits at or below levels of toxicological concern. The sample quantitation limits vary according to sample medium. The quantitation limits for chemicals in water samples are often far lower than for the same chemicals in soils, because of interferences caused by co-extractable components in the soil. These interferences are most problematic when chemicals are at concentrations near the detection limit. Analytical methods have been selected which will provide the required detection limits. The methods that will be used and their detection limits are discussed in the QAPP.

To select appropriate analytical methods, method detection limits have been compared with analyte-specific concentrations of concern such as RBCs. RBCs are concentrations that under given exposure assumptions, will produce a specified risk. For this discussion, RBCs are concentrations which are estimated to cause a carcinogenic risk of 1×10^{-6} or a hazard quotient of 1 using assumptions explained in Appendix C.

3.5 SCREENING-LEVEL HEALTH RISK EVALUATION METHODOLOGY

This section provides a description of the approach that will be used in the screening-level health risk evaluation for the site. Potential human health impacts will be evaluated by comparing maximum chemical concentrations found at the site with EPA Region III RBCs.

The goal of this evaluation process is to make a determination as to whether or not a release has occurred at the site that could pose a potential risk to human health or the environment. The risk-based approach outlined in this section provides an upper-bound estimate of potential human health impacts because conservative screening criteria and maximum chemical concentrations are used to estimate potential impacts. If the vertical extent of contamination has been defined and no potential human health or environmental risks are indicated for the site using these conservative criteria, then no further investigation is recommended for the site.

3.5.1 Derivation of Screening Criteria

The RBCs will be taken from the Region III table (April 20, 1994) which is provided and described in Appendix C. These RBCs are based on 1×10^{-6} excess cancer risk or a hazard quotient equal to 1, assuming residential ingestion exposures. It must be emphasized that this is a highly conservative approach used for screening purposes only; risks that would be estimated in a site-specific quantitative BRA are likely to be much lower than the risk levels calculated using these screening criteria.

For a carcinogen, the soil RBC is the concentration of a chemical in soil that is estimated to result in an excess cancer risk of 1×10^{-6} (1 in 1,000,000) to receptors, assuming long-term (30-year) daily exposures. A range of 1×10^{-6} to 1×10^{-4} (1 in 1,000,000 to 1 in 10,000) is EPA's target excess cancer risk range for cleanup under Superfund and RCRA (EPA 1991). Therefore, RBCs based on a target risk of 1×10^{-6} are conservative (protective) values, and exceedances of these RBCs do not necessarily mean that a health risk is present. Exceedance of the RBCs may mean, however, that further evaluation of chemical concentrations, exposure assumptions, and carcinogenicity may be warranted.

For noncarcinogens, RBCs are the concentrations in soil that are estimated to result in a "hazard quotient" (HQ) of 1.0 to a resident at the site. A hazard quotient is the ratio of the estimated daily dose from the assumed exposure to a reference dose (RfD), established by EPA, that is considered safe for a lifetime of daily exposure. A hazard quotient of 1 means that no toxic effects are likely to occur, even to sensitive individuals exposed for a lifetime. A hazard quotient above 1 does not mean that toxic effects will necessarily occur, but that further evaluation of exposures and chemical toxicity is required.

A maximum chemical concentration that exceeds a screening-level RBC does not mean that a health risk exists because the maximum concentration detected is not the concentration to which people would routinely be exposed, and the exposure assumptions used to derive the RBCs are for residential land use (not realistic for this site) and are not site-specific. Based on the preliminary exposure evaluation, no residential exposures of any duration or magnitude occur or are likely to occur at this site. However, since this evaluation is a screen, the very conservative residential exposure scenarios will be used. If the site requires further evaluation, the site will be closely evaluated to determine the most probable future use. Occupational exposures are significantly less than residential, and conditions such as cold weather and clean soil cover would reduce or prevent contact with potentially contaminated soil.

It is important to note that RBCs are not cleanup goals. Cleanup goals are determined on a site-specific basis. Rather, comparing soil concentrations to screening-level RBCs based on residential use, a 10^{-6} excess cancer risk level, and a HQ of 1.0 for noncarcinogens is adopted as a means of screening whether the chemicals in soils could pose a threat to human health. If the screening-level RBCs are not exceeded, no further action is recommended. If the screening-level RBCs are exceeded, further evaluation of potential risks will be completed.

3.6 BASELINE RISK ASSESSMENT

A baseline risk assessment will be completed at the site if detected concentrations exceed RBCs so that there is a potential cumulative health risk. Risk assessments could be completed to assess the potential adverse human health and environmental effects attributable to potential exposures to substances present at the site at Cannon AFB, assuming no actions are

undertaken to control or mitigate the contamination (i.e., no corrective action). The results of the risk assessments will be used to:

- Estimate the magnitude of potential health risk at the site and the primary causes of that risk
- Help determine whether corrective action is necessary at the site under RCRA
- Help support the selection of the "no action" alternative, where appropriate

The risk assessments will estimate the level of health risks associated with potential exposures to chemicals of concern in environmental media at each of the sites. Data from soil investigations at the sites and modeled air and groundwater concentrations would be used to evaluate the potential health risks.

The objectives of the baseline risk assessments will be to identify human health and environmental risks specific to chemicals released from the sites; and if a potential for harm to human health or the environment exists, to determine site-specific concentrations that will not be harmful to public health or the environment. Results of the risk assessments will be used to help determine whether no further investigation is warranted at the site, if interim action is warranted, or if the site should be carried forward in a Corrective Measures Study.

Baseline risk assessments will follow the guidance provided by EPA for evaluation of public health risks. Specific EPA guidance documents include: Risk Assessment Guidance for Superfund: Volume I - Human Health Evaluation Manual and Volume II - Environmental Evaluation Manual (EPA 1989b, c), Exposure Factors Handbook (EPA 1989d), Human Health Evaluation Manual Supplemental Guidance: "Standard Default Exposure Factors" (EPA 1991), Guidelines for Exposure Assessment (EPA 1992b), and other relevant EPA guidance.

CANNON AFB DECISION DIAGRAM FOR PHASE II INVESTIGATION OF SITE SD-II

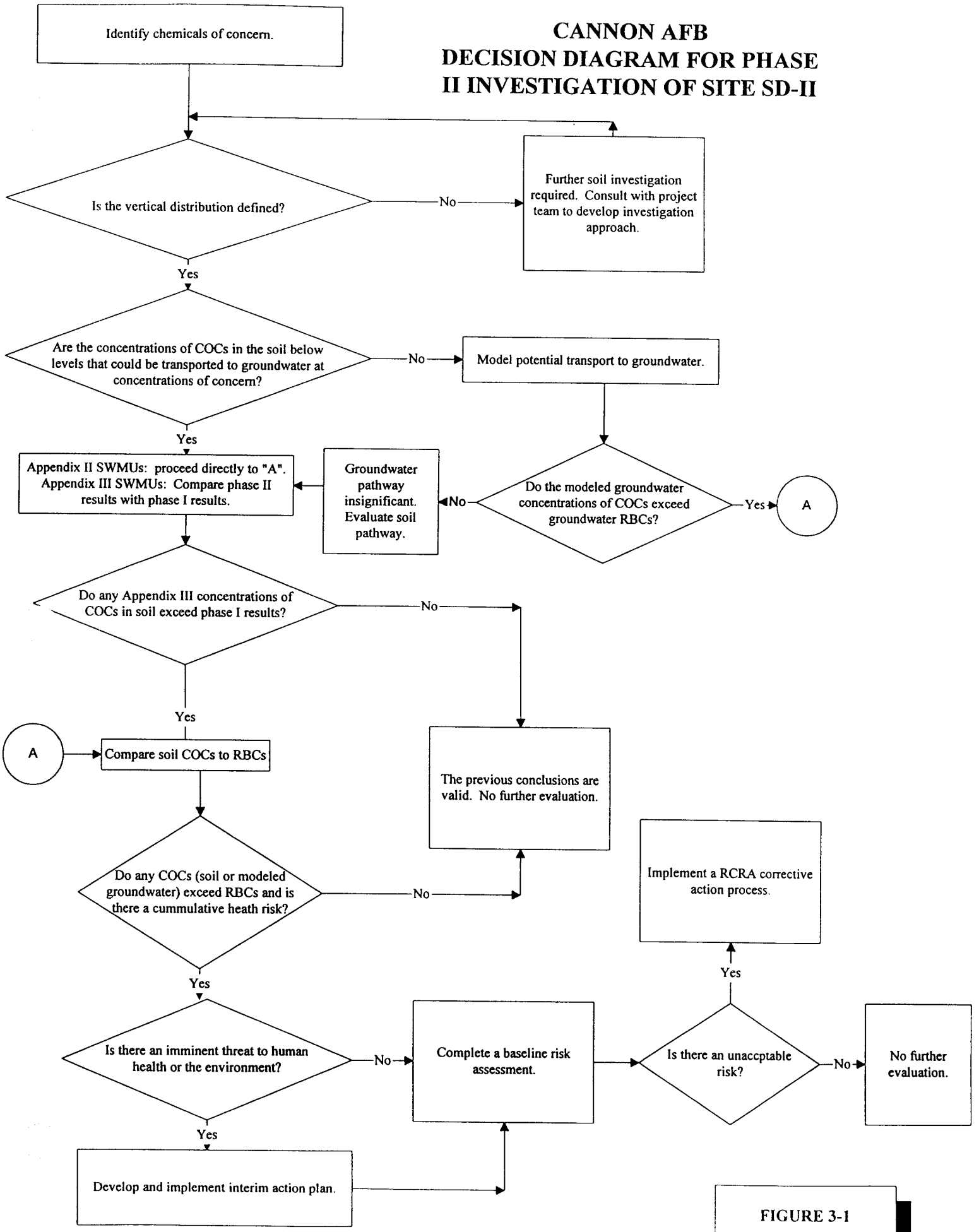

FIGURE 3-1

S:\CANNON\DDPH2WP.VSD

C3M11M16.DWG 01/09/1995 12:07

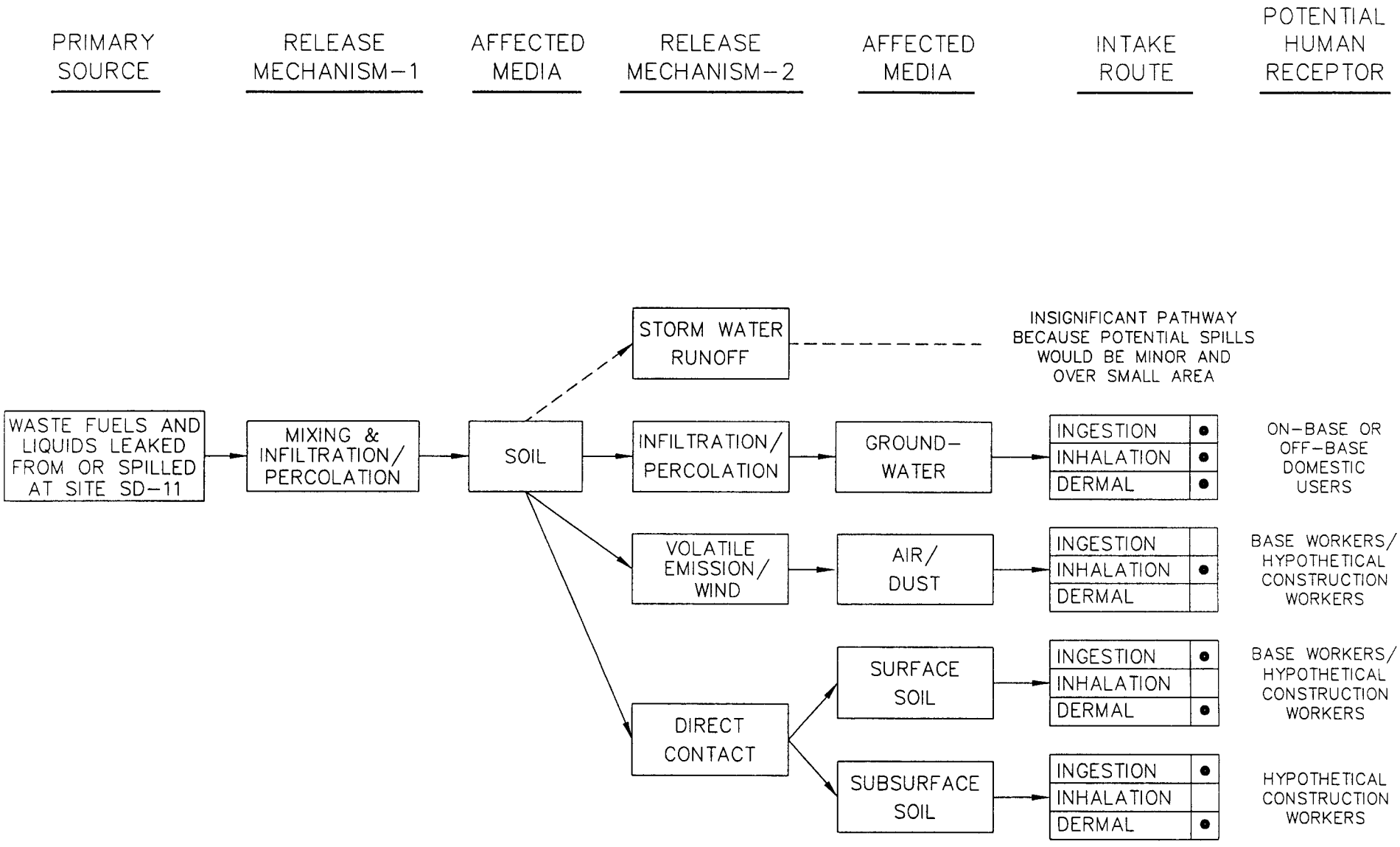

NOTE:

SOLID LINES REPRESENT POTENTIALLY COMPLETE PATHWAYS

DASHED LINES REPRESENT INCOMPLETE OR INSIGNIFICANT PATHWAYS

ONLY FUTURE USE EXPOSURES WILL BE CONSIDERED FOR SOILS PRESENTLY COVERED BY PAVEMENT

DRN BY SCR	DATE 01/09/95	EXPOSURE PATHWAY FLOW CHART SITE SD-11 CANNON AIR FORCE BASE NEW MEXICO	PROJECT NO.	FIG. NO.
CHK'D BY .	REVISIONS: 0		C3M11MM	3-2

4.0
FIELD SAMPLING PROCEDURES

4.1 PURPOSE AND SCOPE

These field sampling procedures are designed to provide specific information on the field activities associated with the investigations of potential hazardous waste releases from Site SD-11 at Cannon AFB. The procedures present the information required for completing the RFI in a manner consistent with specific quality goals of precision, accuracy, representativeness, completeness, and comparability in pursuit of data quality objectives established for the project in the Work Plan. Implementation of and compliance with the procedures for completing the field investigation are required for the acquisition of high quality data for determining the nature and extent of potential contamination and for use in screening-level risk evaluation or in a possible future baseline risk assessment (BRA).

These procedures are based on the data requirements for this project. The data requirements in the plan conform with the November 1, 1994, Scope of Services (SOS) provided by the U.S. Army Corps of Engineers (USACE), Omaha District. The individual SWMU sites comprising Site SD-11 are listed in Table 1-1. The work planned in this document will apply only to SWMUs 87 and 90 within Site SD-11. The work includes preparing planning documents, doing a field investigation (soil borings and soil sampling), analyzing the field samples for chemicals, evaluating the chemical data, comparing the analytical results to established risk-based concentrations (RBCs), and preparing the final RFI report.

4.2 REGULATORY FRAME WORK

These procedures are written to satisfy the requirements for completing the RFI as specified in the USACE SOS and following guidance set forth in "RCRA Facility Investigations (RFI) Guidance" (EPA 530/SW-89-031). Cannon AFB is being asked to investigate and clean up, as necessary, all suspected past hazardous waste sites under the provisions of RCRA Section 3004(u), as a condition of their RCRA Part B Permit for Cannon AFB's hazardous waste material operations.

4.3 SITE SD-11

Sections 2.2.1 and 2.2.2 provide a description of Site SD-11 which is being investigated during this RFI at Cannon AFB. A site map of Cannon AFB showing the location of Site SD-11 is presented on Figure 1-1. Sections 2.2.1 and 2.2.2 describe the site and briefly discuss potential contaminants which may be present at the site and the existing situation at the site. This section discusses sampling objectives and proposed sample locations and frequencies. The soil boring locations will be finalized on the basis of utility clearances and drill rig access and will be agreed upon by Cannon AFB and USACE personnel before drilling commences. Soil sampling will be completed as specified in Standard Operating Procedure (SOP) Nos. 7 and 8 using a truck-mounted drilling rig equipped with hollow-stem augers and split-spoon samplers (stainless steel). The SOPs are contained in Appendix D of this document.

4.3.1 Sampling Objectives

The overall objective of sampling at the site of the former Jet Engine Test Cell (Site SD-11) is to evaluate the vertical and lateral extent of contamination in soils under and surrounding the excavated oil/water separator. This information is required to assess whether any contamination present poses a significant risk to human health or the environment. The analytical data collected from this investigation will be used in a future health and environmental risk assessment and as a basis for evaluating if further investigation is needed. The specific sampling objectives at the site are to:

- Characterize the concentrations of site-related chemicals in surface and subsurface soils at the site. The assumed release points include cracks and joints where leakage occurred at the bottom of the oil/water separator.

- Characterize the vertical and horizontal distribution of site-related chemicals in soils and evaluate the potential for any chemicals of concern found in the soils to impact the groundwater.

- Assess the presence of site-related contaminants in the groundwater at water well 9.

4.3.2 Sample Locations, Frequencies, and Analysis

To meet the sampling objectives, water well 9 (Figure 2-1) will be sampled and four initial soil borings will be drilled at the site of the former oil/water separator at site SD-11 as shown in Figure 4-1. One boring will be drilled approximately in the center of the location of the removed oil/water separator. Three additional borings will be drilled in a triangular pattern with each boring approximately 20 feet from the first boring (the boring in the center of the oil/water separator). One of these borings will be drilled directly west of the removed oil/water separator and along the plugged drain pipe. The other two borings will be drilled approximately 20 feet northeast and southeast of the first boring. Based on the results of these four borings, additional borings will be drilled in locations to be determined to further assess the extent of soil contamination. A maximum total of 700 linear feet of borings will be drilled and sampled. Drilling and sampling procedures to be used for this investigation are as follows:

- Soil borings will be drilled and sampled using hollow-stem auger techniques with stainless steel split spoon samplers.

- Soil samples for field screening and chemical analysis will be collected at the surface, every 5 feet to a depth of 40 feet, and every 10 feet thereafter to the total depth of the boring.

- Each sample interval will be field screened for headspace and breathing zone. These observations will be noted in column d of the HTW drilling log.

- Each sample interval will also be field screened using immunoassay methodologies. The immunoassay test kits will be set to detect petroleum products including gasoline, diesel fuel #2, jet A fuel, JP-4, kerosene, fuel oil #2, fuel oil #6, and mineral spirits. The samples will be tested on-site as the boring progresses.

Each boring will be drilled to a maximum depth of 100 feet, or, to a depth where two consecutive samples show nondetects based on petroleum immunoassay results. Chemical samples will be collected and analyzed for:

- VOCs by EPA Method 8240
- SVOCs by EPA Method 8270
- Total TAL metals
- For TRPH by EPA Method 418.1

The samples will be selected from the following intervals:

- From the surface for use in risk assessment.

- From the bottom two sample intervals showing nondetect immunoassay results to confirm the immunoassay results.

- At three additional sample intervals in the boring where increasing and decreasing trends in contaminant levels are observed based on immunoassay results.

In addition to the chemical samples, samples for geotechnical parameters and biological analysis will be collected. Criteria for selection of these samples is as follows:

- A maximum of 12 geotechnical samples will be collected from the site borings. One representative sample of each distinct soil type encountered in the site borings will be collected and analyzed for grain size distribution (ASTM D 421 & 422) and moisture content (ASTM D 2216).

- A total of 6 biological samples will be collected from the site borings. The samples will be taken from highly-contaminated to noncontaminated zones. The biological samples will be collected using a California-type sampler with autoclaved liners and analyzed for microbial plate counts.

Water well 9 will be sampled and the water sample analyzed for the same parameters as the soil samples and also for pesticides/PCBs by EPA Method 8080 and chlorinated herbicides by EPA Method 8150.

The projected soil and groundwater sampling breakdowns are shown in Tables 4-1 and 4-2, respectively. The sample containers, preservation requirements, and holding times for soil and groundwater samples are shown in Tables 4-3 and 4-4, respectively. The constituents to be analyzed are listed on Tables 4-5 through 4-9.

4.3.3 Sample Designation

The sample designation system for all field (analytical) and quality assurance/quality control (QA/QC) samples is a three-letter and eleven-digit/letter unique identification for each sample (CANXXX-YYYY-ZZZZ). CANXXX is the facility identifier with CAN identifying Cannon AFB and XXX identifying the specific SWMU. The next four digits/letters (YYYY) identify the specific sampled location. At Cannon AFB these include soil boring number, surface soil location number, or groundwater location number (monitoring well number). All sample location numbers are site-specific with the first three numbers corresponding to the SWMU while the fourth number or letter corresponds to the specific soil boring, surface soil, or groundwater sample location. The last four digits (ZZZZ) are the sample identifier. The first number corresponds to the type of sample:

- 0 for soil (analytical)
- 2 for groundwater
- 6 for soil MS/MSD
- 7 for water MS/MSD

The last three numbers correspond to the beginning depth of the sample in feet below ground surface (BGS) for all soil samples. The following is an example of an identification number:

Soil (Analytical)

SWMU#31

CAN 031 - 0311 - 0000

Cannon AFB | SWMU# 31 | Boring #1 | Approximate Depth of top of Sample in feet-BGS

Multiple soil samples could be collected from the same boring; multiple groundwater samples could be collected from the same monitoring well. The last three digits differentiate among

these multiple samples. The soil and water sample identifier will represent the approximate beginning depth at which the sample was collected.

All QA/QC samples will be identified at the location where they were collected, and assigned a unique identification number following the same procedure above except for the last four-digit (ZZZZ) number. The first two numbers of the QA/QC sample identifier correspond to a particular SWMU:

- 11 - Site SD-11

The third number corresponds to the type of QA/QC sample:

- 5 - Ambient Blank
- 6 - Field Duplicate
- 7 - Rinsate Blank
- 8 - Decon Water
- 9 - Trip Blank
- 0 - Missouri River Division Duplicate

The last number corresponds to the number of the particular QA/QC sample type. The only QA/QC sample type which is not identified as above is the matrix spike/matrix spike duplicate sample type. The samples which are chosen for MS/MSD (MS/D for inorganics) analyses are labeled in the field as MS/MSD samples and are noted as such on the Chain-of-Custody forms. These samples are associated with a regular number as shown at the beginning of this section. The following is an example of an identification number for a QA/QC Sample:

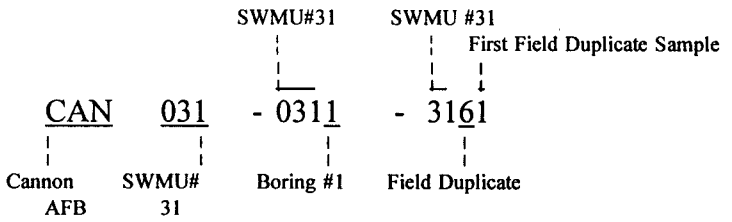

4.3.4 Sampling Equipment and Procedures

The anticipated sampling equipment and procedures that will be used to collect samples are described in the Standard Operating Procedures (SOPs) contained in Appendix A of this document. These SOPs are consistent with procedures identified and described by the EPA (EPA 1987).

Before each sampling event, the Field Manager will meet with the assigned sampling personnel and review the purpose and objectives of the event. This meeting will provide clarification of the sampling event specifics. Topics of discussion and review will include:

- Sampling locations, equipment, and requirements
- Number and types of samples
- Sample identification
- Preservation requirements
- Analytical parameters
- Equipment decontamination procedures
- Chain-of-Custody requirements

The procedures for collecting soil and subsurface water samples will be selected, as appropriate, from the SOPs. The Field Manager will be responsible for ensuring that samples are collected with properly decontaminated equipment and containerized as required by the site-specific sampling procedures.

Decontamination procedures shall be performed in a manner consistent with the most recent EPA guidelines, but as a minimum shall consist of steam cleaning and/or Liquinox, or equivalent wash, followed by a tap water rinse and a double deionized water rinse.

The projected sampling breakdown summaries for the site are presented in Section Tables 4-1 and 4-2. The sample containers, preservation requirements, and holding times for soil samples are summarized in Tables 4-3 and 4-4. The constituents to be analyzed are listed on Tables 4-5 through 4-9.

4.3.5 Sample Handling, Documentation, and Analysis

The labeling, preservation, handling, shipping, documentation, and tracking procedures for all samples collected at Cannon AFB are described in SOP No. 12, Sample Handling, Documentation, and Tracking.

All sample labels should be filled out with waterproof ink and numbered. Soil and water sample labels will be supplied by the laboratory. Sample containers will be placed in plastic storage bags (double bagged in zipper-lock bags) and wrapped in protective packing material (i.e., foam liners, bubble packing, styrofoam peanuts). Samples will then be placed in a cooler with ice (double bagged using 1-gallon zipper-lock bags) for overnight express carrier shipment to the laboratory. A completed and signed Chain-of-Custody will be placed in each cooler being shipped.

Documentation of observations and data acquired in the field will provide information on the acquisition of samples and also provide a permanent record of field activities. The observations and data will be recorded in a permanently bound weatherproof field book with consecutively numbered pages.

To supplement the information recorded in the field book, A-E daily quality control reports (DQCRs) will also be completed, forwarded to the USACE TM, and maintained in W-C records for every sample location.

Detailed summaries of the analyses to be performed on samples collected at the site are presented in Tables 4-1 and 4-2. These analyses will be specified on the Chain-of-Custody.

TABLE 4-1

PROJECTED SOIL SAMPLING BREAKDOWN
SITE SD-11

			QUALITY CONTROL[3]				QUALITY ASSURANCE[4]		
Method	Parameter	No. of Field Samples[3]	No. of Field Replicates	No. of Trip Blanks	No. of Field Blanks	Total No. of W-C Samples[1]	No. of Field Splits	No. of Trip Blanks	Total No. of QA Samples
8242	Volatile Organics	42	4	0	0	46	4	0	4
8270	Semivolatile Organics	42	4	0	0	46	4	0	4
6010/7000	Total Metals[2]	42	4	0	0	46	4	0	4
418.1/9071	Petroleum Hydrocarbons	42	4	0	0	46	4	0	4

1 Two extra 4-oz. VOA jars and two extra 8-oz. jars of soil will be provided from one sample at this SWMU for MS/MSD testing by the laboratory. These samples shall be labeled the same as the soil sample they came from and include "MS/MSD - EXTRA".
2 In addition to Method 6010, includes 7060 (arsenic), 7740 (selenium), 7471 (mercury), 7421 (lead), and 7841 (thallium)
3 Samples sent to Quanterra, Inc.
4 Samples sent to USACE MRD Laboratory.

TABLE 4-2

PROJECTED GROUNDWATER SAMPLING BREAKDOWN
SITE SD-11

			QUALITY CONTROL[4]				QUALITY ASSURANCE[5]			
Method	Parameter	No. of Field Samples[4]	No. of Field Replicates	No. of Trip Blanks	No. of Field Blanks[1]	Total No. of W-C Samples[2]	No. of Field Splits	No. of Field Blanks[1]	No. of Trip Blanks	Total No. of QA Samples
8240	Volatile Organics	1	0	1	0	2	1	0	1	2
8270	Semivolatile Organics	1	0	0	0	1	1	0	0	1
8080	Pesticides/PCBs	1	0	0	0	1	1	0	0	1
8150	Herbicides	1	0	0	0	1	1	0	0	1
6010/7000	Total Metals[3]	1	0	0	0	1	1	0	0	1
418.1/9071	Petroleum Hydrocarbons	1	0	0	0	1	1	0	0	1

1 Field blanks will consist of sampler rinsate.
2 Six extra 40 ml glass VOA vials, twelve extra 1-L amber glass bottles, two extra 1-L polyethylene bottles, and four extra 1-L glass bottles of water will be provided from one sample at this SWMU for MS/MSD testing by the laboratory. These samples shall be labeled the same as the water sample they came from and include "MS/MSD - EXTRA".
3 In addition to Method 6010, includes 7060 (arsenic), 7740 (selenium), 7471 (mercury), 7421 (lead), and 7841 (thallium)
4 Samples sent to Quanterra, Inc.
5 Samples sent to USACE MRD Laboratory.

TABLE 4-3

SAMPLE CONTAINERS, PRESERVATION, AND HOLDING TIMES FOR SOIL SAMPLES

Method	Parameter	Number of Containers/Sample	Minimum Sample Size	Preservation	Holding Time
8240[1]	Volatile organics	2-4 oz. glass VOA jars with Teflon-lined septa	10g	4°C	14 days
8270	Semivolatile organics	1-8 oz. wide-mouth glass jar with Teflon-lined lid[2]	30g	4°C	Extract - 14 days Analyze - 40 days
418.1	Petroleum hydrocarbons	1-8 oz. wide-mouth glass jar with Teflon-lined lid[3]	30g	4°C	28 days
6010	TAL Metals[4]	1-8 oz. wide-mouth glass jar with Teflon-lined lid[3]	200g	4°C	6 months 28 days Hg

1 Modified 8240 using capillary column.
2 2-8 oz. jars are sufficient for Method 8270, 8080, and 8150.
3 2-8 oz. jars are sufficient for Methods 8330, 418.1, and 6010.
4 In addition to Method 6010, TAL metals include 7060 (arsenic), 7420 (lead), 7471 (mercury), 7740 (selenium), and 7841 (thallium).

Note: Sample containers will be double bagged in zipper-lock bags. The bagged packing ice will be placed in double-bagged, 1-gallon, zipper-lock bags.

TABLE 4-4

SAMPLE CONTAINERS, PRESERVATION, AND HOLDING TIMES FOR GROUNDWATER SAMPLES

Method	Parameter	Number of Containers/Sample	Minimum Sample Size	Preservation	Holding Time
8240[1]	Volatile organics	2-40 ml glass VOA vials with Teflon-lined septa	40 ml	4°C and 4 drops HCL to pH <2	14 days
3540 or 3550/8270	Semivolatile organics	2-1 L amber glass bottle with Teflon-lined lid	1 L	4°C	Extract - 7 days Analyze - 40 days
8080	Pesticides and PCBs	1-1 L amber glass bottle with Teflon-lined lid	1 L	4°C	Extract - 7 days Analyze - 40 day
8150	Herbicides	1-1 L amber glass bottle with Teflon-lined lid	1 L	4°C	Extract - 7 days Analyze - 40 days
418.1	Petroleum hydrocarbons	1-1 L amber glass bottle with Teflon-lined lid	1 L	4°C and H_2SO_4 to pH <2	28 days
8015	Petroleum hydrocarbons	GRO - 2-40 ml glass VOAs with Teflon-lined septa	40 ml	4°C and H_2SO_4 to pH <2	14 days
		TCO - 1-L amber glass with Teflon-lined lid	1 L	4°C	Extract - 7 days Analyze - 40 days
6010[2]	TAL Metals	1-1 L polyethylene bottle	1 L	4°C and HNO_3 to pH <2	6 months 13 days Hg

[1] Modified 8240 using capillary column.
[2] In addition to Method 6010, TAL metals include 7060 (arsenic), 7421 (lead), 7470 (mercury), 7740 (selenium), and 7841 (thallium).

Note: Sample containers will be double bagged in zipper-lock bags. The bagged packing ice will be placed in double-bagged, 1-gallon, zipper-lock bags.

TABLE 4-5

VOLATILE ORGANICS BY GC/MS EPA METHOD 8240[1]

Compounds
Chloromethane
Bromomethane
Vinyl chloride
Chloroethane
Acetone
Carbon disulfide
1,1-Dichloroethene
1,1-Dichloroethane
1,2-Dichloroethene (total)
Dichloromethane
Chloroform
1,2-Dichloroethane
2-Butanone
1,1,1-Trichloroethane
Carbon tetrachloride
Bromodichloromethane
1,2-Dichloropropane
cis-1,3-Dichloropropene
Trichloroethene
Dibromochloromethane
1,1,2-Trichloroethane
Benzene
trans-1,3-Dichloropropene
Bromoform
4-Methyl-2-pentanone
2-Hexanone
Tetrachloroethene
Toluene
1,1,2,2-Tetrachloroethane
Chlorobenzene
Ethylbenzene
Styrene
Xylenes (total)

[1] SW-846, 3rd Edition, using a capillary column

TABLE 4-6

SEMIVOLATILE ORGANICS BY GC/MS EPA METHOD 8270[1]

Compounds
Phenol
bis(2-Chloroethyl)ether
2-Chlorophenol
1,3-Dichlorobenzene
1,4-Dichlorobenzene
1,2-Dichlorobenzene
2-Methylphenol
bis(2-Chloroisopropyl)ether
3/4-Methylphenol
N-Nitroso-di-n-propylamine
Hexachloroethane
Nitrobenzene
Isophorone
2-Nitrophenol
2,4-Dimethylphenol
2,4-Dichlorophenol
1,2,4-Trichlorobenzene
Naphthalene
4-Chloroaniline
Hexachlorobutadiene
4-Chloro-3-methylphenol
2-Methylnaphthalene
Hexachlorocyclopentadiene
2,4,6-Trichlorophenol
2,4,5-Trichlorophenol
2-Nitroaniline
Dimethylphthalate
Acenaphthylene
2,6-Dinitrotoluene
3-Nitroaniline
Acenaphthene

TABLE 4-6

SEMIVOLATILE ORGANICS BY GC/MS EPA METHOD 8270[1]

Compounds
2,4-Dinitrophenol
4-Nitrophenol
Dibenzofuran
2,4-Dinitrotoluene
Diethylphthalate
4-Chlorophenylphenyl ether
Fluorene
4-Nitroaniline
4,6-Dinitro-2-methylphenol
N-nitrosodiphenylamine
4-Bromophenylphenyl ether
Hexachlorobenzene
Pentachlorophenol
Phenanthrene
Anthracene
Di-n-Butylphthalate
Fluoranthene
Pyrene
Butylbenzylphthalate
3,3'-Dichlorobenzidine
Benzo(a)anthracene
Chrysene
bis(2-Ethylhexyl)phthalate
Di-n-octylphthalate
Benzo(b)fluoranthene
Benzo(k)fluoranthene
Benzo(a)pyrene
Indeno(1,2,3-cd)pyrene
Dibenz(a,h)anthracene
Benzo(g,h,i)perylene

[1] SW-846, 3rd Edition

TABLE 4-7

METALS BY EPA METHODS 6010 AND 7000

Parameter
Aluminum, Al
Antimony, Sb
Arsenic, As
Barium, Ba
Beryllium, Be
Cadmium, Cd
Calcium, Ca
Chromium, Cr
Cobalt, Co
Copper, Cu
Iron, Fe
Lead, Pb
Magnesium, Mg
Manganese, Mn
Mercury, Hg[1]
Nickel, Ni
Potassium, K
Selenium, Se
Silver, Ag
Sodium, Na
Thallium, Tl
Vanadium, V
Zinc, Zn

[1] Cold vapor atomic absorption technique

TABLE 4-8

ORGANOCHLORINE PESTICIDES AND PCBs BY EPA METHOD 8080[1]

Compounds
alpha-BHC[2]
beta-BHC[2]
delta-BHC[2]
gamma-BHC (Lindane)
Heptachlor
Aldrin
Heptachlor epoxide
Endosulfan I
Dieldrin
4,4-DDE[4]
Endrin
Endosulfan II
4,4-DDD[5]
Endosulfan sulfate
4,4-DDT[3]
Endrin ketone
Methoxychlor
Endrin aldehyde
alpha-Chlordane
gamma-Chlordane
Toxaphene
Aroclor-1016[6]
Aroclor-1221[6]
Aroclor-1232[6]
Aroclor-1242[6]
Aroclor-1248[6]
Aroclor-1254[6]
Aroclor-1260[6]

1 SW-846, 3rd Edition (Appendix IX compounds)
2 BHC = Benzene hexachloride
3 DDT = 1,1,1-Trichloro-2,2-bis(p-chlorophenyl)ethane (Dichlorodiphenyltrichloroethane)
4 DDE = Dichlorodiphenyldichloroethylene
5 DDD = Dichlorodiphenyldichloroethane
6 Aroclors = Polychlorinated biphenyls (PCBs)

TABLE 4-9

HERBICIDES BY EPA METHOD 8150[1]

Compounds
2,4-D[1]
2,4,5-T[1]
2,4,5-TP (Silvex)[1]
Dalapon[2]
Dicamba[2]
MCPP[2,3]
MCPA[2,4]
Dichloroprop[2]
Dinoseb[2]

[1] SW-846, 3rd Edition, using a capillary column (Appendix IX compounds)
[2] Target Compound List Analyte
[3] MCPP = 2-(4, Chloro-2-methylphenoxy) propionic acid)
[4] MCPA = 4-Chloro-2-methylphenoxyacetic acid)

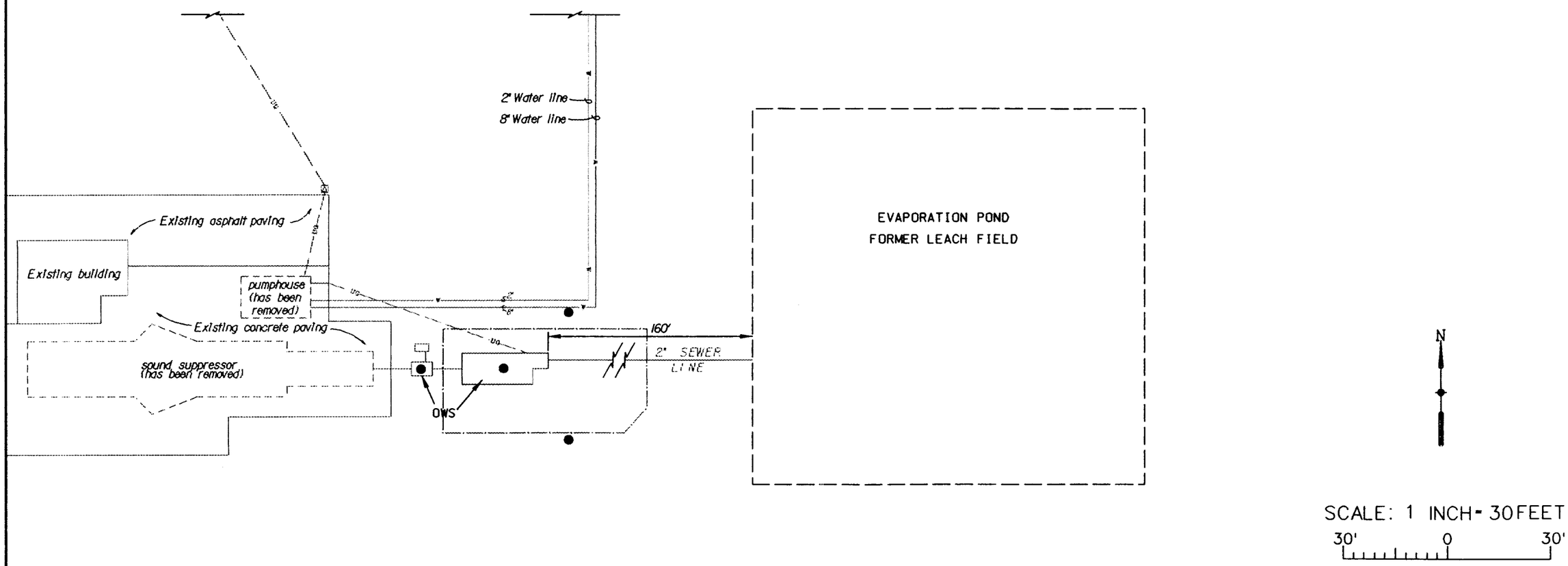

Woodward-Clyde
ENGINEERING & SCIENCES APPLIED TO THE EARTH & ITS ENVIRONMENT

U.S. ARMY ENGINEER DISTRICT
CORPS OF ENGINEERS
OMAHA, NEBRASKA

CANNON AFB NEW MEXICO
OIL-WATER SEPARATOR REMOVAL

PROPOSED BORINGS
SD-11

SIZE	DWG NO.	FIG. NO.	REV.
	CN03SITE.DGN	4-1	

SCALE: NONE SHEET OF

5.0
REFERENCES

A.T. Kearney. 1987. Preliminary Review/VSI Report, RCRA Facility Assessment Cannon Air Force Base. U.S. Environmental Protection Agency, Region VI by A.T. Kearney, Inc., Chicago, Illinois. 1987.

CH2M Hill. 1983. Installation Restoration Program Records Search for Cannon Air Force Base, New Mexico. Prepared for the Air Force Engineering and Services Center and the Tactical Air Command. Contract No. FO8637-80-G0010-0018. August.

Lee Wan Associates, Inc. 1990. RCRA Facility Investigation Work Plan, Alexandria, VA. June 1990.

Radian Corporation. 1986. Installation Restoration Program Phase II - Confirmation/ Quantification State I, Cannon AFB, N.M. Vols. I (text) & II (Appendixes A-M). Final Report for period 9/84-4/85. September.

Remediation Services Incorporated (RSI). 1994. Clsure Report: DACA45-94-B-0100. September.

U.S. Environmental Protection Agency (EPA). 1989d. RCRA Facility Investigation (RFI) Guidance Interim Final. EPA 530/SW-89-031. EPA, Washington, D.C. May 1989.

United States Environmental Protection Agency (EPA). 1987. Compendium of Superfund Field Operations Methods. EPA 540/ P-87/01. OSWER Directive 9355.0-14.

United States Environmental Protection Agency (EPA). 1989a. Exposure Factors Handbook. Office of Solid Waste and Emergency Response. EPA 600/8-89-043. July. Washington, D.C.

United States Environmental Protection Agency (EPA). 1989b. Risk Assessment Guidance for Superfund. Volume I. Human Health Evaluation. Part A (Interim Final). Office of Emergency and Remedial Response. EPA/540/1-89/002. Washington, D.C. December

United States Environmental Protection Agency (EPA). 1989c. Risk Assessment Guidance for Superfund. Volume II. Environmental Evaluation Manual. Office of Emergency and Remedial Response. EPA/540/1-89/001. Washington, D.C. March.

United States Environmental Protection Agency (EPA). 1991. Human Health Evaluation Manual, Supplemental Guidance: "Standard Default Exposure Factors." OSWER Directive 9285.6-03. Washington, D.C. March.

United States Environmental Protection Agency (EPA). 1992. Guidelines for Exposure Assessment. 57 FR 22888. May 29, 1992.

Walk, Haydel & Associates, Inc. (WHA). 1990. Installation Restoration Program. Final Remedial Investigation Report, Cannon Air Force Base, New Mexico. Prepared under contract with Omaha District, Corps of Engineers, Omaha, Nebraska, for Headquarters, Tactical Air Command, HQ, TAC/DEEV, Langley Air Force Base, Virginia.

Woodward-Clyde. 1992. Remedial Investigation Report for 18 Solid Waste Management Units. Cannon AFB, New Mexico. Prepared for U.S. Army Corps of Engineers, Omaha District, Omaha, Nebraska.

Woodward-Clyde. 1993. "Field Sampling Plan, RCRA Facility Investigations, Appendix III SWMUs, Cannon Air Force Base, New Mexico". Prepared for U.S. Army Corps of Engineers, Omaha District, Omaha, Nebraska.

APPENDIX A
QUALITY ASSURANCE PROJECT PLAN ADDENDUM

TABLE OF CONTENTS

Section		Page
1.0	INTRODUCTION	1-1
1.1	PURPOSE AND SCOPE	1-1
1.2	WORK PLAN AND SAMPLING AND ANALYSIS INTEGRATION	1-1
2.0	PROJECT DESCRIPTION	2-1
2.1	ENVIRONMENTAL SETTING	2-1
2.2	SUMMARY OF THE DATA QUALITY OBJECTIVES DEVELOPMENT PROCESS	2-1
2.3	PROJECT DEFINITIONS	2-1
3.0	PROJECT ORGANIZATION AND RESPONSIBILITY	3-1
4.0	QUALITY ASSURANCE OBJECTIVES	4-1
5.0	SAMPLING AND FIELD PROCEDURES	5-1
6.0	SAMPLE AND DOCUMENT CUSTODY PROCEDURES	6-1
7.0	CALIBRATION PROCEDURES AND FREQUENCY	7-1
8.0	ANALYTICAL PROCEDURES	8-1

1.0
INTRODUCTION

1.1 PURPOSE AND SCOPE

This Quality Assurance Project Plan (QAPP) Addendum is designed to provide specific guidance and quality assurance/quality control (QA/QC) requirements for the generation of environmental data of known quality. This data will be used in making site-specific decisions for the Phase II RCRA Facility Investigations (RFI) for Site SD-11 at Cannon Air Force Base (AFB), New Mexico.

This document provides discussion of project objectives, procedures, and specific measurements to be performed and evaluated in the assessment of data generated for the Cannon AFB Phase II RFI. As an appendix to the Work Plan, specific Standard Operating Procedures (SOPs) are also provided as a means of maintaining consistency with respect to procedures commonly used in conjunction with data collection.

This QAPP Addendum has been prepared by Woodward-Clyde (W-C) under Indefinite Delivery Contract Number DACW45-93-D-0005 with USACE, Omaha District, and in accordance with RFI Guidance, EPA 530/SW-89-031, May 1989, applicable elements of the USACE Engineering Regulation ER 1110-1-263, Engineering and Design Chemical Quality Management for Hazardous Waste Remedial Activities (USACE October 1990) and other applicable regulations and guidances. This QAPP Addendum is written to include the RFI activities associated with this investigation of Site SD-11.

1.2 WORK PLAN AND SAMPLING AND ANALYSIS INTEGRATION

This QAPP is an integral part of the work plan prepared for implementation of Phase II RFI activities to be carried out at Cannon AFB.

The Work Plan details the objectives and planned activities for the Cannon RFI.

2.0
PROJECT DESCRIPTION

2.1 ENVIRONMENTAL SETTING

See Section 2 of the October 1994 QAPP Addendum for a discussion of the general environmental setting and Section 2.2.1 of the Work Plan for a description of Site SD-11.

2.2 SUMMARY OF THE DATA QUALITY OBJECTIVES DEVELOPMENT PROCESS

Discussion of the Data Quality Objectives (DQOs) development process associated with the Phase II RFI for Cannon AFB is provided in Section 2.2 of the October 1994 QAPP Addendum. Data quality objectives for SD-11 are presented in Section 2.1 of the Work Plan.

2.3 PROJECT DEFINITIONS

Project definitions remain the same as those published in the October 1994 QAPP Addendum.

3.0
PROJECT ORGANIZATION AND RESPONSIBILITY

Project organization and responsibility remains the same as published in the October 1994 QAPP Addendum.

4.0
QUALITY ASSURANCE OBJECTIVES

The overall QA philosophy for the Phase II RFI at Cannon AFB remains the same as published in the October 1994 QAPP Addendum. The acceptance criteria remain the same as updated December 1994.

5.0
SAMPLING AND FIELD PROCEDURES

In general, sampling and field procedures remain the same as published in the October 1994 QAPP Addendum. Refer to Section 4.4.2 of the Work Plan for sample locations, frequencies, and analyses. New sampling activities presented in Section 4.4.2 are field screening utilizing immunoassay, geotechnical sampling for grain size distribution and moisture content, and biological sampling for microbial analysis.

6.0
SAMPLE AND DOCUMENT CUSTODY PROCEDURES

Sample and document custody remains the same as published in the October 1994 QAPP Addendum.

7.0
CALIBRATION PROCEDURES AND FREQUENCY

Calibration procedures and frequency remain the same as published in the October 1994 QAPP Addendum.

8.0
ANALYTICAL PROCEDURES

With the exception of those new procedures discussed in Section 5.0 Sampling and Field Procedures (immunoassay, geotechnical, and microbial), analytical procedures remain the same as published in the October 1994 QAPP Addendum.

Detection of petroleum hydrocarbons using immunoassay will be performed as presented in SOP No. 16 of the Work Plan. QA/QC procedures as specified in the SOP will be followed; however, no audit or review of the QA/QC procedures is planned.

Geotechnical analysis for grain size distribution will be performed utilizing ASTM D 421 & 422. Geotechnical analysis for moisture content will be performed utilizing ASTM D 2216. QA/QC procedures as specified in these methods will be followed; however, no audit or review of the QA/QC procedures is planned.

Microbial analysis will be performed utilizing Method 37-8.1.1 for Heterotrophic Plate Count and Method 37-8.3.5 for Pseudomonas Plate Count. The microbial methods are from "Methods of Soil Analysis, 2nd Edition." Additionally, a customized spread plate technique method will be utilized to determine petroleum hydrocarbon degraders. This method is based on the concept that organisms can be diluted and uniformly spread onto agar plates which then results in the development of distinct microbial colonies. The number of organisms are expressed in terms of colony forming units (CFU) per gram of soil.

The objective of the microbial study is to evaluate heterotrophic (organisms that will utilize organic carbon for biosynthesis), pseudomonas (genus or type of bacteria often associated with the degradation of hydrocarbons in soil and groundwater), and petroleum-degrading indigenous microorganisms by supplying appropriate substrates for specific microbial colony development. The results of these tests will be used as reported and no QA/QC is planned.

APPENDIX B
HEALTH AND SAFETY PLAN ADDENDUM

ADDENDUM NO. 3
SITE SAFETY AND HEALTH PLAN

APPENDIX II AND APPENDIX III
PHASE II RFI
CANNON AIR FORCE BASE

CLOVIS, NEW MEXICO

September 12, 1994

WCFS Project No. C3M11MM

Effective Dates: January 12, 1995 through June 30, 1995

PROJECT APPROVALS:

Steve Cox
Project Manager
Steve Cox

1-11-95
Date

Curt Clowe
Business Unit Health and Safety Officer
Curtis J. Clowe

1-10-95
Date

Jack Coogan
Corporate Health and Safety Officer
Jack Coogan, CIH

1-11-95
Date

TABLE OF CONTENTS

Section		Page
1.0	INTRODUCTION	-1-
2.0	SITE-SPECIFIC SCOPE OF WORK	-2-
2.1	Description of SWMU	-2-
2.2	Previous Investigations	-2-
2.3	Phase II Objectives	-2-
2.4	Sample Locations, Frequencies, and Analysis	-2-
3.0	HAZARD ASSESSMENT	-3-
4.0	SITE-SPECIFIC HEALTH AND SAFETY REQUIREMENTS	-3-
4.1	Hearing Protection	-3-
4.2	Personal Protection Equipment (PPE)	-3-
4.3	Monitoring	-3-

ADDENDUM NO. 3

SITE SAFETY AND HEALTH PLAN

APPENDIX III
PHASE II RFI
CANNON AIR FORCE BASE
CLOVIS, NEW MEXICO

January 12, 1994

WCFS Project No. C3M11MM

1.0 INTRODUCTION

The purpose of this Site Safety and Health Plan (SSHP) Addendum is to address current health and safety issues for field activities during the Phase II RFI at the Appendix I site known as Site SD-11 at Cannon AFB which were not included in Addendum No. 1 to the original SSHP (W-C September 1993).

This addendum is to be kept on site at all times with the original Appendix III SSHP and Addendum No. 1. This addendum amends the effective dates of the SSHP to include the currently planned field activities. It also serves as administrative information as follows:

Project Name:	Cannon AFB Appendix III SWMUs Phase II RFI
Project Number:	C3M11MM
Business Unit:	Omaha
Project Manager:	Steve Cox
Health & Safety Officer:	Curt Clowe
Corporate HSO:	Jack Coogan, CIH
USACE TM:	Tom Thiele
Cannon AFB Primary POC:	Wayne McKenzie

No changes in field personnel are anticipated. Current health and safety training records will be maintained on site.

2.0 SITE-SPECIFIC SCOPE OF WORK

Site SD-11 includes five solid waste management units (SWMUs) 86-90. The vicinity map of Cannon AFB is shown on Figure 1-1 of the Work Plan. The five SWMUs (see Table 1-1 of the Work Plan) are part of the Appendix I and location of Site SD-11 list of SWMUs at Cannon AFB.

Visible staining was reported at depths of approximately 20 feet bgs during removal actions. The Phase II investigation will include up to seven new soil borings up to a depth of 100 feet bgs. Up to six soil samples will be collected for chemical analysis from the surface to the bottom of each boring. Six soil samples will be collected for microbial plate counts. One groundwater sample will be collected from an on-site water well. Chemical analysis will include volatile organic compounds (VOCs), semivolatile organic compounds (SVOCs), TAL metals, and total recoverable petroleum hydrocarbons (TRPH). Samples selected for chemical analysis will be based on headspace screening and immunoassay screening (for TPH) results collected in the field. Greater detail is provided in the Work Plan as follows:

2.1 Description of SWMU

See Section 2.2.1 of the Work Plan.

2.2 Previous Investigations

See Section 2.2.2 of the Work Plan.

2.3 Phase II Objectives

See Section 2.2.3 of the Work Plan.

2.4 Sample Locations, Frequencies, and Analysis

See Section 4.4.2 of the Work Plan.

3.0 HAZARD ASSESSMENT

Planned fieldwork is not anticipated to introduce any new chemical, physical, or biological hazards. The potential for exposure is expected to be low. Exposure routes include inhalation, dermal, and ingestion.

Material safety data sheets and general information for the chemicals of concern can be obtained by contacting the HSO or CHSO.

4.0 SITE-SPECIFIC HEALTH AND SAFETY REQUIREMENTS

4.1 Hearing Protection

No changes to the hearing protection requirements are needed for this task.

4.2 Personal Protection Equipment (PPE)

No changes to the PPE requirements outlined in the SSHP will be needed. The initial level of protection will be Modified Level D.

4.3 Monitoring

No changes to the monitoring requirements are needed for this task. Action levels as outlined in the SSHP will remain the same.

APPENDIX C
ENVIRONMENTAL PROTECTION AGENCY REGION III
RICK-BASED CONCENTRATION TABLES

UNITED STATES ENVIRONMENTAL PROTECTION AGENCY
Region III
841 Chestnut Street
Philadelphia, Pennsylvania 19107

April 20, 1994

SUBJECT: Risk-Based Concentration Table, Second Quarter 1994

FROM: Roy L. Smith, Ph.D., Senior Toxicologist
Technical Support Section (3HW13)

TO: RBC Table mailing list

Attached is the EPA Region III risk-based concentration table, which we have distributed quarterly to all interested parties since 1991. If you are not currently on the mailing list, but would like to be, please contact Anna Poulton (phone: 215-597-3179, fax: 215-597-9890) and give her your name, address, and phone and fax numbers.

The table contains reference doses and carcinogenic potency slopes (obtained from IRIS through April 1, 1994, HEAST through November 1993, OHEA-Cincinnati, and other EPA sources) for nearly 600 chemicals. These toxicity constants have been combined with "standard" exposure scenarios to calculate chemical concentrations corresponding to fixed levels of risk (*i.e.*, a hazard quotient of 1, or lifetime cancer risk of 10^{-6}, whichever occurs at a lower concentration) in water, air, fish tissue, and soil.

The Region III toxicologists use this table as a risk-based screen for Superfund sites, and as a desk reference for emergencies and requests for immediate information. The table also provides a useful benchmark for evaluating site investigation data and preliminary remediation goals. The table has no official status as either regulation or guidance, and should be used only as a predictor of generic single-contaminant health risk estimates. *The table is specifically not intended as (1) a stand-alone decision-making tool, (2) a substitute for EPA guidance for preparing baseline risk assessments, (3) a source of site-specific cleanup levels, or (4) a rule to determine if a waste is hazardous under RCRA.* In general, chemical concentrations above the levels in the table suggest a need for a closer look by a toxicologist, but should not be used as the sole basis for taking any action.

The toxicity information in the table has been assembled by hand, and (despite extensive checking and years of use) may contain errors. It's advisable to cross-check before relying on any numbers in the table. If you find any errors, please send me a note.

This issue of the table includes a revised legend at the top of each page, in which a 'w' flag (meaning that the value has been withdrawn from either IRIS or HEAST) has been substituted for the former 'x' and 'y' flags. The flag change had already been made in the previous version of the table, but I forgot to change the legend. Several people noticed, and asked about it. Also, all newly revised reference doses and potency slopes now appear underlined and in boldface for quick recognition. The shading used in the previous version copied poorly.

Risk-Based Concentration Table
Background Information

General: Separate carcinogenic and non-carcinogenic risk-based concentrations were calculated for each compound for each pathway. The concentration in the table is the lower of the two, rounded to two significant figures. The following terms and values were used in the calculations:

Exposure variables	Value	Name
1-General:		
Carcinogenic potency slope oral (risk per mg/kg/d):	*	CPSo
Carcinogenic potency slope inhaled (risk per mg/kg/d):	*	CPSi
Reference dose oral (mg/kg/d):	*	RfDo
Reference dose inhaled (mg/kg/d):	*	RfDi
Target cancer risk:	1e-06	TR
Target hazard quotient:	1	THQ
Body weight, adult (kg):	70	BWa
Body weight, age 1-6 (kg):	15	BWc
Averaging time carcinogens (d):	25550	ATc
Averaging time non-carcinogens (d):	ED*365	ATn
Inhalation, adult (m3/d):	20	IRAa
Inhalation, child (m3/d):	12	IRAc
Inhalation factor, age-adjusted (m3-y/kg-d):	11.66	IFAadj
Tap water ingestion, adult (L/d):	2	IRWa
Tap water ingestion, age 1-6 (L/d):	1	IRWc
Tap water ingestion factor, age-adjusted (L-y/kg-d):	1.09	IFWadj
Fish ingestion (g/d):	54	IRF
Soil ingestion, adult (mg/d):	100	IRSa
Soil ingestion, age 1-6 (mg/d):	200	IRSc
Soil ingestion factor, age adjusted (mg-y/kg-d):	114.29	IFSadj
2-Residential:		
Exposure frequency (d/y):	350	EFr
Exposure duration, total (y):	30	EDtot

2. Residential water use (μg/L). Volatilization terms were calculated only for compounds with "***" in the "VOC" column. Compounds having a Henry's Law constant greater than 10^{-5} were considered volatile. The list may be incomplete, but is unlikely to include false positives. The equations and the volatilization factor (VF, above) were obtained from RAGS IB. Oral potency slopes and reference doses were used for both oral and inhaled exposures for volatile compounds lacking inhalation values. Inhaled potency slopes were substituted for unavailable oral potency slopes only for volatile compounds; inhaled RfDs were substituted for unavailable oral RfDs for both volatile and non-volatile compounds.

a. Carcinogens: Calculations were based on combined childhood and adult exposure.

$$\frac{TR \cdot ATc \cdot 1000\frac{\mu g}{mg}}{EFr \cdot ([VF \cdot IFAadj \cdot CPSi] + [IFWadj \cdot CPSo])}$$

b. Non-carcinogens: Calculations were based on adult exposure.

$$\frac{THQ \cdot BWa \cdot ATn \cdot 1000\frac{\mu g}{mg}}{EFr \cdot EDtot \cdot \left(\frac{VF \cdot IRAa}{RfDi} + \frac{IRWa}{RfDo}\right)}$$

3. Air (μg/m^3). Oral potency slopes and references were used where inhalation values were not available.

a. Carcinogens: Calculations were based on combined childhood and adult exposure.

$$\frac{TR \cdot ATc \cdot 1000\frac{\mu g}{mg}}{EFr \cdot IFAadj \cdot CPSi}$$

b. Non-carcinogens: Calculations were based on adult exposure.

$$\frac{THQ \cdot RfDi \cdot BWa \cdot ATn \cdot 1000\frac{\mu g}{mg}}{EFr \cdot EDtot \cdot IRAa}$$

4. Fish (mg/kg):

a. Carcinogens: Calculations were based on adult exposure.

$$\frac{TR \cdot BWa \cdot ATc}{EFr \cdot EDtot \cdot \frac{IRF}{1000\frac{g}{kg}} \cdot CPSo}$$

Sources: I=IRIS h=HEAST a=HEAST alt. w=Withdrawn from IRIS or HEAST e=EPA-ECAO o=Other EPA documents *Basis of RBC: c=carcinogenic effects n=noncarcinogenic effects.*

Contaminant	CAS	RfDo mg/kg/d	RfDi mg/kg/d	CPSo kg•d/mg	CPSi kg•d/mg	VOC	Tap water µg/L	Ambient air µg/m3	Fish mg/kg	Industrial soil mg/kg	Residential soil mg/kg
Acephate	30560191	4.00E-03 *I*		8.70E-03 *I*			7.7 *o*	0.72 *o*	0.36 *e*	330 *e*	73 *e*
Acetaldehyde	75070		2.57E-03 *I*		7.70E-03 *I*		94 *n*	0.81 *e*			
Acetochlor	34256821	2.00E-02 *I*					730 *n*	73 *n*	27 *n*	20000 *n*	1600 *n*
Acetone	67641	1.00E-01 *I*					3700 *n*	370 *n*	140 *n*	100000 *n*	7800 *n*
Acetone cyanohydrin	75865	7.00E-02 *h*	2.86E-03 *a*				2600 *n*	10 *n*	95 *n*	72000 *n*	5500 *n*
Acetonitrile	75078	6.00E-03 *I*	1.43E-02 *a*				220 *n*	52 *n*	8.1 *n*	6100 *n*	470 *n*
Acetophenone	98862	1.00E-01 *I*	5.71E-06 *w*			***	0.042 *n*	0.021 *n*	140 *n*	100000 *n*	7800 *n*
Acifluorfen	62476599	1.30E-02 *I*					470 *n*	47 *n*	18 *n*	13000 *n*	1000 *n*
Acrolein	107028	2.00E-02 *h*	5.71E-06 *I*				730 *n*	0.021 *n*	27 *n*	20000 *n*	1600 *n*
Acrylamide	79061	2.00E-04 *I*		4.50E+00 *I*	4.55E+00 *I*		0.015 *o*	0.0014 *o*	0.0007 *e*	0.64 *e*	0.14 *e*
Acrylic acid	79107	5.00E-01 *I*	1.00E-03 *I*				18000 *n*	3.7 *n*	680 *n*	510000 *n*	39000 *n*
Acrylonitrile	107131	1.00E-03 *h*	5.71E-04 *I*	5.40E-01 *I*	2.38E-01 *I*		0.12 *o*	0.026 *o*	0.0058 *e*	5.3 *e*	1.2 *e*
Alachlor	15972608	1.00E-02 *I*		8.00E-02 *h*			0.84 *o*	0.078 *o*	0.039 *e*	36 *e*	8 *e*
Alar	1596845	1.50E-01 *I*					5500 *n*	550 *n*	200 *n*	150000 *n*	12000 *n*
Aldicarb	116063	1.00E-03 *I*					37 *n*	3.7 *n*	1.4 *n*	1000 *n*	78 *n*
Aldicarb sulfone	1646884	1.00E-03 *I*					37 *n*	3.7 *n*	1.4 *n*	1000 *n*	78 *n*
Aldrin	309002	3.00E-05 *I*		1.70E+01 *I*	1.71E+01 *I*		0.004 *o*	0.00037 *o*	0.00019 *e*	0.17 *e*	0.038 *e*
Ally	74223646	2.50E-01 *I*					9100 *n*	910 *n*	340 *n*	260000 *n*	20000 *n*
Allyl alcohol	107186	5.00E-03 *I*					180 *n*	18 *n*	6.8 *n*	5100 *n*	390 *n*
Allyl chloride	107051	5.00E-02 *w*	2.86E-04 *I*				1800 *n*	1 *n*	68 *n*	51000 *n*	3900 *n*
Aluminum	7429905	2.90E+00 *o*					110000 *n*	11000 *n*	3900 *n*	1000000 *n*	230000 *n*
Aluminum phosphide	20859738	4.00E-04 *I*					15 *n*	1.5 *n*	0.54 *n*	410 *n*	31 *n*
Amdro	67485294	3.00E-04 *I*					11 *n*	1.1 *n*	0.41 *n*	310 *n*	23 *n*
Ametryn	834128	9.00E-03 *I*					330 *n*	33 *n*	12 *n*	9200 *n*	700 *n*
m-Aminophenol	591275	7.00E-02 *h*					2600 *n*	260 *n*	95 *n*	72000 *n*	5500 *n*
4-Aminopyridine	504245	2.00E-05 *h*					0.73 *n*	0.073 *n*	0.027 *n*	20 *n*	1.6 *n*
Amitraz	33089611	2.50E-03 *I*					91 *n*	9.1 *n*	3.4 *n*	2600 *n*	200 *n*
Ammonia	7664417		2.86E-02 *I*				1000 *n*	100 *n*			
Ammonium sulfamate	7773060	2.00E-01 *I*					7300 *n*	730 *n*	270 *n*	200000 *n*	16000 *n*
Aniline	62533		2.86E-04 *I*	5.70E-03 *I*			10 *n*	1 *n*	0.55 *e*	500 *e*	110 *e*
Antimony and compounds	7440360	4.00E-04 *I*					15 *n*	1.5 *n*	0.54 *n*	410 *n*	31 *n*
Antimony pentoxide	1314609	5.00E-04 *h*					18 *n*	1.8 *n*	0.68 *n*	510 *n*	39 *n*
Antimony potassium tartrate	304610	9.00E-04 *h*					33 *n*	3.3 *n*	1.2 *n*	920 *n*	70 *n*
Antimony tetroxide	1332316	4.00E-04 *h*					15 *n*	1.5 *n*	0.54 *n*	410 *n*	31 *n*
Antimony trioxide	1309644	4.00E-04 *h*					15 *n*	1.5 *n*	0.54 *n*	410 *n*	31 *n*
Apollo	74115245	1.30E-02 *I*					470 *n*	47 *n*	18 *n*	13000 *n*	1000 *n*
Aramite	140578	5.00E-02 *h*		2.50E-02 *I*	2.49E-02 *I*		2.7 *o*	0.25 *o*	0.13 *e*	110 *e*	26 *e*
Arsenic	7440382	3.00E-04 *I*					11 *n*	1.1 *n*	0.41 *n*	310 *n*	23 *n*
Arsenic (as carcinogen)	7440382			1.75E+00 *I*	1.51E+01 *I*		0.038 *o*	0.00041 *o*	0.0018 *e*	1.6 *e*	0.37 *e*
Arsine	7784421		1.43E-05 *I*				0.52 *n*	0.052 *n*			
Assure	76578148	9.00E-03 *I*					330 *n*	33 *n*	12 *n*	9200 *n*	700 *n*

Sources: I=IRIS h=HEAST a=HEAST alt. w=Withdrawn from IRIS or HEAST e=EPA-ECAO o=Other EPA documents — *Basis of RBC: c=carcinogenic effects n=noncarcinogenic effects.*

Contaminant	CAS	RfDo mg/kg/d	RfDi mg/kg/d	CPSo kg•d/mg	CPSi kg•d/mg	VOC	Tap water µg/L	Ambient air µg/m3	Fish mg/kg	Industrial soil mg/kg	Residential soil mg/kg
sec-Butylbenzene	135988	1.00E-02 e				***	61 n	37 n	14 n	10000 n	780 n
tert-Butylbenzene	104518	1.00E-02 e				***	61 n	37 n	14 n	10000 n	780 n
Butylphthalyl butylglycolate	85701	1.00E+00 I					37000 n	3700 n	1400 n	1000000 n	78000 n
Cacodylic acid	75605	3.00E-03 h					110 n	11 n	4.1 n	3100 n	230 n
Cadmium and compounds	7440439	5.00E-04 I			6.30E+00 I		18 n	0.00099 c	0.68 n	510 n	39 n
Caprolactam	105602	5.00E-01 I					18000 n	1800 n	680 n	510000 n	39000 n
Captafol	2425061	2.00E-03 I		8.60E-03 h			7.8 c	0.73 c	0.37 c	330 c	74 c
Captan	133062	1.30E-01 I		3.50E-03 h			19 c	1.8 c	0.9 c	820 c	180 c
Carbaryl	63252	1.00E-01 I					3700 n	370 n	140 n	100000 n	7800 n
Carbazole	86748			2.00E-02 h			3.4 c	0.31 c	0.16 c	140 c	32 c
Carbofuran	1563662	5.00E-03 I					180 n	18 n	6.8 n	5100 n	390 n
Carbon disulfide	75150	1.00E-01 I	2.86E-03 h			***	21 n	10 n	140 n	100000 n	7800 n
Carbon tetrachloride	56235	7.00E-04 I	5.71E-04 e	1.30E-01 I	5.25E-02 I	***	0.16 c	0.12 c	0.024 c	22 c	4.9 c
Carbosulfan	55285148	1.00E-02 I					370 n	37 n	14 n	10000 n	780 n
Carboxin	5234684	1.00E-01 I					3700 n	370 n	140 n	100000 n	7800 n
Chloral	75876	2.00E-03 I					73 n	7.3 n	2.7 n	2000 n	160 n
Chloramben	133904	1.50E-02 I					550 n	55 n	20 n	15000 n	1200 n
Chloranil	118752			4.03E-01 h			0.17 c	0.016 c	0.0078 c	7.1 c	1.6 c
Chlordane	57749	6.00E-05 I		1.30E+00 I	1.29E+00 I		0.052 c	0.0049 c	0.0024 c	2.2 c	0.49 c
Chlorimuron-ethyl	90982324	2.00E-02 I					730 n	73 n	27 n	20000 n	1600 n
Chlorine dioxide	10049044		5.71E-05 I				2.1 n	0.21 n			
Chloroacetaldehyde	107200	6.90E-03 o					250 n	25 n	9.3 n	7100 n	540 n
Chloroacetic acid	79118	2.00E-03 h					73 n	7.3 n	2.7 n	2000 n	160 n
2-Chloroacetophenone	532274		8.57E-06 I				0.31 n	0.031 n			
4-Chloroaniline	106478	4.00E-03 I					150 n	15 n	5.4 n	4100 n	310 n
Chlorobenzene	108907	2.00E-02 I	5.71E-03 a			***	39 n	21 n	27 n	20000 n	1600 n
Chlorobenzilate	510156	2.00E-02 I		2.70E-01 h	2.70E-01 h		0.25 c	0.023 c	0.012 c	11 c	2.4 c
p-Chlorobenzoic acid	74113	2.00E-01 h					7300 n	730 n	270 n	200000 n	16000 n
4-Chlorobenzotrifluoride	98566	2.00E-02 h					730 n	73 n	27 n	20000 n	1600 n
2-Chloro-1,3-butadiene	126998	2.00E-02 a	2.00E-03 h			***	14 n	7.3 n	27 n	20000 n	1600 n
1-Chlorobutane	109693	4.00E-01 h				***	2400 n	1500 n	540 n	410000 n	31000 n
Chlorodifluoromethane	75456		1.43e+01 I			***	87000 n	52000 n			
Chloroethane	75003	4.00E-01 e	2.86E+00 I			***	8600 n	10000 n	540 n	410000 n	31000 n
2-Chloroethyl vinyl ether	110758	2.50E-02 o				***	150 n	91 n	34 n	26000 n	2000 n
Chloroform	67663	1.00E-02 I		6.10E-03 I	8.05E-02 I	***	0.15 c	0.078 c	0.52 c	470 c	100 c
Chloromethane	74873			1.30E-02 h	6.30E-03 h	***	1.4 c	0.99 c	0.24 c	220 c	49 c
4-Chloro-2,2-methylaniline hydrochloride	3165933			4.60E-01 h			0.15 c	0.014 c	0.0069 c	6.2 c	1.4 c
4-Chloro-2-methylaniline	95692			5.80E-01 h			0.12 c	0.011 c	0.0054 c	4.9 c	1.1 c
beta-Chloronaphthalene	91587	8.00E-02 I					2900 n	290 n	110 n	82000 n	6300 n
o-Chloronitrobenzene	88733			2.50E-02 h		***	0.42 c	0.25 c	0.13 c	110 c	26 c
p-Chloronitrobenzene	121733			1.80E-02 h		***	0.59 c	0.35 c	0.18 c	160 c	35 c

Sources: l=IRIS h=HEAST a=HEAST alt. w=Withdrawn from IRIS or HEAST e=EPA–ECAO o=Other EPA documents *Basis of RBC: c=carcinogenic effects n=noncarcinogenic effects.*

Contaminant	CAS	RfDo mg/kg/d	RfDi mg/kg/d	CPSo kg•d/mg	CPSi kg•d/mg	VOC	Tap water µg/L	Ambient air µg/m3	Fish mg/kg	Industrial soil mg/kg	Residential soil mg/kg
Decabromodiphenyl ether	1163195	1.00E–02 l				***	61 n	37 n	14 n	10000 n	780 n
Demeton	8065483	4.00E–05 l					1.5 n	0.15 n	0.054 n	41 n	3.1 n
Diallate	2303164			6.10E–02 h		***	0.17 o	0.1 c	0.052 c	47 c	10 c
Diazinon	333415	9.00E–04 h					33 n	3.3 n	1.2 n	920 n	70 n
1,4–Dibromobenzene	106376	1.00E–02 l				***	61 n	37 n	14 n	10000 n	780 n
Dibromochloromethane	124481	2.00E–02 l		8.40E–02 l		***	0.13 o	0.075 c	0.038 c	34 c	7.6 c
1,2–Dibromo–3–chloropropane	96128		5.71E–05 l	1.40E+00 h	2.42E–03 h	***	0.048 o	0.21 n	0.0023 c	2 c	0.46 c
1,2–Dibromoethane	106934		5.71E–05 h	8.50E+01 l	7.70E–01 l	***	0.00075 c	0.0081 c	0.000037 c	0.034 c	0.0075 c
Dibutyl phthalate	84742	1.00E–01 l					3700 n	370 n	140 n	100000 n	7800 n
Dicamba	1918009	3.00E–02 l					1100 n	110 n	41 n	31000 n	2300 n
1,2–Dichlorobenzene	95501	9.00E–02 l	5.71E–02 a			***	370 n	210 n	120 n	92000 n	7000 n
1,3–Dichlorobenzene	541731	8.90E–02 o				***	540 n	320 n	120 n	91000 n	7000 n
1,4–Dichlorobenzene	106467		2.29E–01 l	2.40E–02 h		***	0.44 c	0.26 c	0.13 c	120 c	27 c
3,3'–Dichlorobenzidine	91941			4.50E–01 l			0.15 o	0.014 c	0.007 c	6.4 c	1.4 c
1,4–Dichloro–2–butene	764410				9.30E+00 h	***	0.0011 o	0.00067 o			
Dichlorodifluoromethane	75718	2.00E–01 l	5.71E–02 a			***	390 n	210 n	270 n	200000 n	16000 n
1,1–Dichloroethane	75343	1.00E–01 h	1.43E–01 a			***	810 n	520 n	140 n	100000 n	7800 n
1,2–Dichloroethane (EDC)	107062		2.86E–03 e	9.10E–02 l	9.10E–02 l	***	0.12 o	0.069 c	0.035 c	31 c	7 c
1,1–Dichloroethylene	75354	9.00E–03 l		6.00E–01 l	1.75E–01 l	***	0.044 c	0.036 c	0.0053 c	4.8 c	1.1 c
1,2–Dichloroethylene (cis)	156592	1.00E–02 h				***	61 n	37 n	14 n	10000 n	780 n
1,2–Dichloroethylene (trans)	156605	2.00E–02 l				***	120 n	73 n	27 n	20000 n	1600 n
1,2–Dichloroethylene (mixture)	540590	9.00E–03 h				***	55 n	33 n	12 n	9200 n	700 n
2,4–Dichlorophenol	120832	3.00E–03 l					110 n	11 n	4.1 n	3100 n	230 n
2,4–Dichlorophenoxyacetic Acid (2,4–D)	94757	1.00E–02 l				***	61 n	37 n	14 n	10000 n	780 n
4–(2,4–Dichlorophenoxy)butyric Acid	94826	8.00E–03 l					290 n	29 n	11 n	8200 n	630 n
1,2–Dichloropropane	78875		1.14E–03 l	6.80E–02 h		***	0.16 o	0.092 c	0.046 c	42 c	9.4 c
2,3–Dichloropropanol	616239	3.00E–03 l					110 n	11 n	4.1 n	3100 n	230 n
1,3–Dichloropropene	542756	3.00E–04 l	5.71E–03 l	1.75E–01 h	1.30E–01 h	***	0.077 c	0.048 c	0.018 c	16 c	3.7 c
Dichlorvos	62737	5.00e–04 l		2.90E–01 l			0.23 o	0.022 c	0.011 c	9.9 c	2.2 c
Dicofol	115322			4.40E–01 w			0.15 o	0.014 c	0.0072 c	6.5 c	1.5 c
Dicyclopentadiene	77736	3.00E–02 h	5.71E–05 a			***	0.42 n	0.21 n	41 n	31000 n	2300 n
Dieldrin	60571	5.00E–05 l		1.60E+01 l	1.61E+01 l		0.0042 c	0.00039 c	0.0002 c	0.18 c	0.04 c
Diesel emissions			1.43E–03 l				52 n	5.2 n			
Diethyl phthalate	84662	8.00E–01 l					29000 n	2900 n	1100 n	820000 n	63000 n
Diethylene glycol, monobutyl ether	112345		5.71E–03 h				210 n	21 n			
Diethylene glycol, monoethyl ether	111900	2.00E+00 h					73000 n	7300 n	2700 n	1000000 n	160000 n
Diethylforamide	617845	1.10E–02 h					400 n	40 n	15 n	11000 n	860 n
Di(2–ethylhexyl)adipate	103231	6.00E–01 l		1.20E–03 l			56 o	5.2 o	2.6 o	2400 o	530 c
Diethylstilbestrol	56531			4.70E+03 h			0.000014 o	1.30E–06 o	6.70E–07 o	0.00061 c	0.00014 c
Difenzoquat (Avenge)	43222486	8.00E–02 l					2900 n	290 n	110 n	82000 n	6300 n
Diflubenzuron	35367385	2.00E–02 l					730 n	73 n	27 n	20000 n	1600 n
Diisopropyl methylphosphonate (DIMP)	1445756	8.00E–02 l					[illegible]	[illegible]	[illegible]	[illegible]	[illegible]

Sources: l=IRIS h=HEAST a=HEAST alt. w=Withdrawn from IRIS or HEAST e=EPA-ECAO o=Other EPA documents *Basis of RBC: c=carcinogenic effects n=noncarcinogenic effects*

Contaminant	CAS	RfDo mg/kg/d	RfDi mg/kg/d	CPSo kg•d/mg	CPSi kg•d/mg	VOC	Tap water µg/L	Ambient air µg/m3	Fish mg/kg	Industrial soil mg/kg	Residential soil mg/kg
1,2-Epoxybutane	106887		5.71E-03 l				210 n	21 n			
Ethephon (2-chloroethyl phosphonic acid)	16672870	5.00E-03 l					180 n	18 n	6.8 n	5100 n	390 n
Ethion	563122	5.00E-04 l					18 n	1.8 n	0.68 n	510 n	39 n
2-Ethoxyethanol acetate	111159	3.00E-01 a					11000 n	1100 n	410 n	310000 n	23000 n
2-Ethoxyethanol	110805	4.00E-01 h	5.71E-02 l				15000 n	210 n	540 n	410000 n	31000 n
Ethyl acrylate	140885			4.80E-02 h			1.4 c	0.13 c	0.066 c	60 c	13 c
EPTC (S-Ethyl dipropylthiocarbamate)	759944	2.50E-02 l					910 n	91 n	34 n	26000 n	2000 n
Ethyl ether	60297	2.00E-01 l				***	1200 n	730 n	270 n	200000 n	16000 n
Ethyl methacrylate	97632	9.00E-02 h					3300 n	330 n	120 n	92000 n	7000 n
Ethyl acetate	141786	9.00E-01 l					33000 n	3300 n	1200 n	920000 n	70000 n
Ethylbenzene	100414	1.00E-01 l	2.86E-01 l			***	1300 n	1000 n	140 n	100000 n	7800 n
Ethylene cyanohydrin	109784	3.00E-01 h					11000 n	1100 n	410 n	310000 n	23000 n
Ethylene diamine	107153	2.00E-02 h					730 n	73 n	27 n	20000 n	1600 n
Ethylene glycol	107211	2.00E+00 l					73000 n	7300 n	2700 n	1000000 n	160000 n
Ethylene glycol, monobutyl ether	111762		5.71E-03 h				210 n	21 n			
Ethylene oxide	75218			1.02E+00 h	3.50E-01 h		0.066 c	0.018 c	0.0031 c	2.8 c	0.63 c
Ethylene thiourea (ETU)	96457	8.00E-05 l		1.19E-01 h			0.57 c	0.053 c	0.027 c	24 c	5.4 c
Ethyl p-nitrophenyl phenylphosphorothioate	2104645	1.00E-05 l					0.37 n	0.037 n	0.014 n	10 n	0.78 n
Ethylnitrosourea	759739			1.40E+02 w			0.00048 c	0.000045 c	0.000023 c	0.02 c	0.0046 c
Ethylphthalyl ethyl glycolate	84720	3.00E+00 l					110000 n	11000 n	4100 n	1000000 n	230000 n
Express	10120	8.00E-03 l					290 n	29 n	11 n	8200 n	630 n
Fenamiphos	22224926	2.50E-04 l					9.1 n	0.91 n	0.34 n	260 n	20 n
Fluometuron	2164172	1.30E-02 l					470 n	47 n	18 n	13000 n	1000 n
Fluoride	7782414	6.00E-02 l					2200 n	220 n	81 n	61000 n	4700 n
Fluoridone	59756604	8.00E-02 l					2900 n	290 n	110 n	82000 n	6300 n
Flurprimidol	56425913	2.00E-02 l					730 n	73 n	27 n	20000 n	1600 n
Flutolanil	66332965	6.00E-02 l					2200 n	220 n	81 n	61000 n	4700 n
Fluvalinate	69409945	1.00E-02 l					370 n	37 n	14 n	10000 n	780 n
Folpet	133073	1.00E-01 l		3.50E-03 l			19 c	1.8 c	0.9 c	820 c	180 c
Fomesafen	72178020			1.90E-01 l			0.35 c	0.033 c	0.017 c	15 c	3.4 c
Fonofos	944229	2.00E-03 l					73 n	7.3 n	2.7 n	2000 n	160 n
Formaldehyde	50000	2.00E-01 l			4.55E-02 l		7300 n	0.14 c	270 n	200000 n	16000 n
Formic Acid	64186	2.00E+00 h					73000 n	7300 n	2700 n	1000000 n	160000 n
Fosetyl-al	39148248	3.00E+00 l					110000 n	11000 n	4100 n	1000000 n	230000 n
Furan	110009	1.00E-03 l					37 n	3.7 n	1.4 n	1000 n	78 n
Furazolidone	67458			3.80E+00 h			0.018 c	0.0016 c	0.00083 c	0.75 c	0.17 c
Furfural	98011	3.00E-03 l	1.43E-02 a				110 n	52 n	4.1 n	3100 n	230 n
Furium	531828			5.00E+01 h			0.0013 c	0.00013 c	0.000063 c	0.057 c	0.013 c
Furmecyclox	60568050			3.00E-02 l			2.2 c	0.21 c	0.11 c	95 c	21 c
Glufosinate-ammonium	77182822	4.00E-04 l					15 n	1.5 n	0.54 n	410 n	31 n
Glycidaldehyde	765344	4.00E-04 l	2.86E-04 h				15 n	1 n	0.54 n	410 n	31 n
[illegible]	[illegible]	[illegible]					[illegible]	[illegible]	[illegible]	[illegible]	[illegible]

Sources: l=IRIS h=HEAST a=HEAST alt. w=Withdrawn from IRIS or HEAST e=EPA-ECAO o=Other EPA documents *Basis of RBC: c=carcinogenic effects n=noncarcinogenic effects.*

Contaminant	CAS	RfDo mg/kg/d	RfDi mg/kg/d	CPSo kg•d/mg	CPSi kg•d/mg	VOC	Tap water µg/L	Ambient air µg/m3	Fish mg/kg	Industrial soil mg/kg	Residential soil mg/kg
Manganese and compounds	7439965	5.00E-03 l	1.43e-05 l				180 n	0.052 n	6.8 n	5100 n	390 n
Mephosfolan	950107	9.00E-05 h					3.3 n	0.33 n	0.12 n	92 n	7 n
Mepiquat chloride	24307264	3.00E-02 l					1100 n	110 n	41 n	31000 n	2300 n
Mercury (inorganic)	7439976	3.00E-04 h	8.57E-05 h				11 n	0.31 n	0.41 n	310 n	23 n
Mercury (methyl)	22967926	3.00E-04 l					11 n	1.1 n	0.41 n	310 n	23 n
Merphos	150505	3.00E-05 l					1.1 n	0.11 n	0.041 n	31 n	2.3 n
Merphos oxide	78488	3.00E-05 l					1.1 n	0.11 n	0.041 n	31 n	2.3 n
Metalaxyl	57837191	6.00E-02 l					2200 n	220 n	81 n	61000 n	4700 n
Methacrylonitrile	126987	1.00E-04 l	2.00E-04 a				3.7 n	0.73 n	0.14 n	100 n	7.8 n
Methamidophos	10265926	5.00E-05 l					1.8 n	0.18 n	0.068 n	51 n	3.9 n
Methanol	67561	5.00E-01 l					18000 n	1800 n	680 n	510000 n	39000 n
Methidathion	950378	1.00E-03 l					37 n	3.7 n	1.4 n	1000 n	78 n
Methomyl	16752775	2.50E-02 l					910 n	91 n	34 n	26000 n	2000 n
Methoxychlor	72435	5.00E-03 l					180 n	18 n	6.8 n	5100 n	390 n
2-Methoxyethanol acetate	110496	2.00E-03 a					73 n	7.3 n	2.7 n	2000 n	160 n
2-Methoxyethanol	109864	1.00E-03 h	5.71E-03 l				37 n	21 n	1.4 n	1000 n	78 n
2-Methoxy-5-nitroaniline	99592			4.60E-02 h			1.5 c	0.14 c	0.069 c	62 c	14 c
Methyl acetate	79209	1.00E+00 h					37000 n	3700 n	1400 n	1000000 n	78000 n
Methyl acrylate	96333	3.00E-02 a					1100 n	110 n	41 n	31000 n	2300 n
2-Methylaniline hydrochloride	636215			1.80E-01 h			0.37 c	0.035 c	0.018 c	16 c	3.5 c
2-Methylaniline	95534			2.40E-01 h			0.28 c	0.026 c	0.013 c	12 c	2.7 c
Methyl chlorocarbonate	79221	1.00E+00 w					37000 n	3700 n	1400 n	1000000 n	78000 n
4-(2-Methyl-4-chlorophenoxy) butyric acid	94815	1.00E-02 l					370 n	37 n	14 n	10000 n	780 n
2-Methyl-4-chlorophenoxyacetic acid	94746	5.00E-04 l					18 n	1.8 n	0.68 n	510 n	39 n
2-(2-Methyl-14-chlorophenoxy)propionic acid	93652	1.00E-03 l					37 n	3.7 n	1.4 n	1000 n	78 n
Methylcyclohexane	108872		8.57E-01 h				31000 n	3100 n			
Methylene bromide	74953	1.00E-02 a				***	61 n	37 n	14 n	10000 n	780 n
Methylene chloride	75092	6.00E-02 l	8.57E-01 h	7.50E-03 l	1.64E-03 l	***	4.1 c	3.8 c	0.42 c	380 c	85 c
4,4'-Methylene bis(2-chloroaniline)	101144	7.00E-04 h		1.30E-01 h	1.30E-01 h		0.52 c	0.048 c	0.024 c	22 c	4.9 c
4,4'-Methylenebisbenzeneamine	101779			2.50E-01			0.27 c	0.025 c	0.013 c	11 c	2.6 c
4,4'-Methylene bis(N,N'-dimethyl)aniline	101611			4.60E-02 l			1.5 c	0.14 c	0.069 c	62 c	14 c
4,4'-Methylenediphenyl isocyanate	101688		5.71E-06 h			***	0.035 n	0.021 n			
Methyl ethyl ketone	78933	6.00E-01 l	2.86E-01 l				22000 n	1000 n	810 n	610000 n	47000 n
Methyl hydrazine	60344			1.10E+00 h			0.061 c	0.0057 c	0.0029 c	2.6 c	0.58 c
Methyl isobutyl ketone	108101	8.00E-02 h	2.29E-02 a				2900 n	84 n	110 n	82000 n	6300 n
Methyl methacrylate	80626	8.00E-02 h					2900 n	290 n	110 n	82000 n	6300 n
2-Methyl-5-nitroaniline	99558			3.30E-02 h			2 c	0.19 c	0.096 c	87 c	19 c
Methyl parathion	298000	2.50E-04 l					9.1 n	0.91 n	0.34 n	260 n	20 n
2-Methylphenol (o-cresol)	95487	5.00E-02 l					1800 n	180 n	68 n	51000 n	3900 n
3-Methylphenol (m-cresol)	103394	5.00E-02 l					1800 n	180 n	68 n	51000 n	3900 n
4-Methylphenol (p-cresol)	106445	5.00E-03 h					180 n	18 n	6.8 n	5100 n	390 n

Sources: l=IRIS h=HEAST a=HEAST alt. w=Withdrawn from IRIS or HEAST e=EPA-ECAO o=Other EPA documents *Basis of RBC: c=carcinogenic effects n=noncarcinogenic effects.*

Contaminant	CAS	RfDo mg/kg/d	RfDi mg/kg/d	CPSo kg•d/mg	CPSi kg•d/mg	VOC	Tap water µg/L	Ambient air µg/m3	Fish mg/kg	Industrial soil mg/kg	Residential soil mg/kg
Octamethylpyrophosphoramide	152169	2.00E-03 h					73 n	7.3 n	2.7 n	2000 n	160 n
Oryzalin	19044883	5.00E-02 l					1800 n	180 n	68 n	51000 n	3900 n
Oxadiazon	19666309	5.00E-03 l					180 n	18 n	6.8 n	5100 n	390 n
Oxamyl	23135220	2.50E-02 l					910 n	91 n	34 n	26000 n	2000 n
Oxyfluorfen	42874033	3.00E-03 l					110 n	11 n	4.1 n	3100 n	230 n
Paclobutrazol	76738620	1.30E-02 l					470 n	47 n	18 n	13000 n	1000 n
Paraquat	1910425	4.50E-03 l					160 n	16 n	6.1 n	4600 n	350 n
Parathion	56382	6.00E-03 h					220 n	22 n	8.1 n	6100 n	470 n
Pebulate	1114712	5.00E-02 h					1800 n	180 n	68 n	51000 n	3900 n
Pendimethalin	40487421	4.00E-02 l					1500 n	150 n	54 n	41000 n	3100 n
Pentabromo-6-chloro cyclohexane	87843			2.30E-02 h			2.9 c	0.27 c	0.14 c	120 c	28 c
Pentabromodiphenyl ether	32534819	2.00E-03 l					73 n	7.3 n	2.7 n	2000 n	160 n
Pentachlorobenzene	608935	8.00E-04 l				***	4.9 n	2.9 n	1.1 n	820 n	63 n
Pentachloronitrobenzene	82688	3.00E-03 l		2.60E-01 h		***	0.041 c	0.024 c	0.012 c	11 c	2.5 c
Pentachlorophenol	87865	3.00E-02 l		1.20E-01 l			0.56 c	0.052 c	0.026 c	24 c	5.3 c
Permethrin	52645531	5.00E-02 l					1800 n	180 n	68 n	51000 n	3900 n
Phenmedipham	13684634	2.50E-01 l					9100 n	910 n	340 n	260000 n	20000 n
Phenol	108952	6.00E-01 l					22000 n	2200 n	810 n	610000 n	47000 n
m-Phenylenediamine	108452	6.00E-03 l					220 n	22 n	8.1 n	6100 n	470 n
o-Phenylenediamine	95545	6.00E-03 h					220 n	22 n	8.1 n	6100 n	470 n
p-Phenylenediamine	106503	1.90E-01 h					6900 n	690 n	260 n	190000 n	15000 n
Phenylmercuric acetate	62384	8.00E-05 l					2.9 n	0.29 n	0.11 n	82 n	6.3 n
2-Phenylphenol	90437			1.94E-03 h			35 c	3.2 c	1.6 c	1500 c	330 c
Phorate	298022	2.00E-04 h					7.3 n	0.73 n	0.27 n	200 n	16 n
Phosmet	732116	2.00E-02 l					730 n	73 n	27 n	20000 n	1600 n
Phosphine	7803512	3.00E-04 l	8.57E-06 h				11 n	0.031 n	0.41 n	310 n	23 n
Phosphorus (white)	7723140	2.00E-05 l					0.73 n	0.073 n	0.027 n	20 n	1.6 n
p-Phthalic acid	100210	1.00E+00 h					37000 n	3700 n	1400 n	1000000 n	78000 n
Phthalic anhydride	85449	2.00E+00 l	3.43E-01 h				73000 n	1300 n	2700 n	1000000 n	160000 n
Picloram	1918021	7.00E-02 l					2600 n	260 n	95 n	72000 n	5500 n
Pirimiphos-methyl	29232937	1.00E-02 l					370 n	37 n	14 n	10000 n	780 n
Polybrominated biphenyls		7.00E-06 h		8.90E+00 h			0.0076 c	0.0007 c	0.00035 c	0.32 c	0.072 c
Polychlorinated biphenyls (PCBs)	1336363			7.70E+00 l			0.0087 c	0.00081 c	0.00041 c	0.37 c	0.083 c
Aroclor 1016	12674112	7.00E-05 l					2.6 n	0.26 n	0.095 n	72 n	5.5 n
Polychlorinated terphenyls (PCTs)				4.50E+00 e			0.015 c	0.0014 c	0.0007 c	0.64 c	0.14 c
Polynuclear aromatic hydrocarbons											
Acenaphthene	83329	6.00E-02 l					2200 n	220 n	81 n	61000 n	4700 n
Anthracene	120127	3.00E-01 l					11000 n	1100 n	410 n	310000 n	23000 n
Benzo[a]pyrene	50328			7.30E+00 l	6.10E+00 h		0.0092 c	0.001 c	0.00043 c	0.39 c	0.088 c
Benzo[b]fluoranthene	205992			7.30E-01 e	6.10E-01 e		0.092 c	0.01 c	0.0043 c	3.9 c	0.88 c
Benzo[k]fluoranthene	207089			7.30E-02 e	6.10E-02 e		0.92 c	0.1 c	0.043 c	39 c	8.8 c

Sources: l=IRIS h=HEAST a=HEAST alt. w=Withdrawn from IRIS or HEAST e=EPA–ECAO o=Other EPA documents *Basis of RBC: c=carcinogenic effects n=noncarcinogenic effects.*

Contaminant	CAS	RfDo mg/kg/d	RfDi mg/kg/d	CPSo kg•d/mg	CPSi kg•d/mg	VOC	Tap water µg/L	Ambient air µg/m3	Fish mg/kg	Industrial soil mg/kg	Residential soil mg/kg
Strontium, stable	7440246	6.00E–01 l					22000 n	2200 n	810 n	610000 n	47000 n
Strychnine	57249	3.00E–04 l					11 n	1.1 n	0.41 n	310 n	23 n
Styrene	100425	2.00E–01 l	2.86E–01 l			***	1600 n	1000 n	270 n	200000 n	16000 n
Systhane	88671890	2.50E–02 l					910 n	91 n	34 n	26000 n	2000 n
2,3,7,8–TCDD (dioxin)	1746016			1.56E+05 h	1.16E+05 h		4.30E–07 c	5.40E–08 o	2.00E–08 c	0.000018 c	4.10E–06 c
Tebuthiuron	34014181	7.00E–02 l					2600 n	260 n	95 n	72000 n	5500 n
Temephos	3383968	2.00E–02 h					730 n	73 n	27 n	20000 n	1600 n
Terbacil	5902512	1.30E–02 l					470 n	47 n	18 n	13000 n	1000 n
Terbufos	13071799	2.50E–05 h					0.91 n	0.091 n	0.034 n	26 n	2 n
Terbutryn	886500	1.00E–03 l					37 n	3.7 n	1.4 n	1000 n	78 n
1,2,4,5–Tetrachlorobenzene	95943	3.00E–04 l				***	1.8 n	1.1 n	0.41 n	310 n	23 n
1,1,1,2–Tetrachloroethane	630206	3.00E–02 l		2.60E–02 l	2.59E–02 l	***	0.41 c	0.24 c	0.12 c	110 c	25 c
1,1,2,2–Tetrachloroethane	79345			2.00E–01 l	2.03E–01 l	***	0.052 c	0.031 c	0.016 c	14 c	3.2 c
Tetrachloroethylene (PCE)	127184	1.00E–02 l		5.20E–02 e	2.03E–03 e	***	1.1 c	3.1 c	0.061 c	55 c	12 c
2,3,4,6–Tetrachlorophenol	58902	3.00E–02 l					1100 n	110 n	41 n	31000 n	2300 n
p,a,a,a–Tetrachlorotoluene	5216251			2.00E+01 h		***	0.00053 c	0.00031 c	0.00016 c	0.14 c	0.032 c
Tetrachlorovinphos	961115	3.00E–02 l		2.40E–02 h			2.8 c	0.26 c	0.13 c	120 c	27 c
Tetraethyldithiopyrophosphate	3689245	5.00E–04 l					18 n	1.8 n	0.68 n	510 n	39 n
Thallic oxide	1314325	7.00E–05 _					2.6 n	0.26 n	0.095 n	72 n	5.5 n
Thallium											
Thallium acetate	563688	9.00E–05 l					3.3 n	0.33 n	0.12 n	92 n	7 n
Thallium carbonate	6533739	8.00E–05 l					2.9 n	0.29 n	0.11 n	82 n	6.3 n
Thallium chloride	7791120	8.00E–05 l					2.9 n	0.29 n	0.11 n	82 n	6.3 n
Thallium nitrate	10102451	9.00E–05 l					3.3 n	0.33 n	0.12 n	92 n	7 n
Thallium selenite	12039520	9.00E–05 w					3.3 n	0.33 n	0.12 n	92 n	7 n
Thallium sulfate	7446186	8.00E–05 l					2.9 n	0.29 n	0.11 n	82 n	6.3 n
Thiobencarb	28249776	1.00E–02 l					370 n	37 n	14 n	10000 n	780 n
2–(Thiocyanomethylthio)–benzothiazole	21564170	3.00E–02 h					1100 n	110 n	41 n	31000 n	2300 n
Thiofanox	39196184	3.00E–04 h					11 n	1.1 n	0.41 n	310 n	23 n
Thiophanate–methyl	23564058	8.00E–02 l					2900 n	290 n	110 n	82000 n	6300 n
Thiram	137268	5.00E–03 l					180 n	18 n	6.8 n	5100 n	390 n
Tin and compounds		6.00E–01 h					22000 n	2200 n	810 n	610000 n	47000 n
Toluene	108883	2.00E–01 l	1.14E–01 w			***	750 n	420 n	270 n	200000 n	16000 n
Toluene–2,4–diamine	95807			3.20E+00 h			0.021 c	0.002 c	0.00099 c	0.89 c	0.2 c
Toluene–2,5–diamine	95705	6.00E–01 h					22000 n	2200 n	810 n	610000 n	47000 n
Toluene–2,6–diamine	823405	2.00E–01 h					7300 n	730 n	270 n	200000 n	16000 n
p–Toluidine	106490			1.90E–01 h			0.35 c	0.033 c	0.017 c	15 c	3.4 c
Toxaphene	8001352			1.10E+00 l	1.12E+00 l		0.061 c	0.0056 c	0.0029 c	2.6 c	0.58 c
Tralomethrin	66841256	7.50E–03 l					270 n	27 n	10 n	7700 n	590 n
Triallate	2303175	1.30E–02 l					470 n	47 n	18 n	13000 n	1000 n
Triasulfuron	82097505	1.00E–02 l					370 n	37 n	14 n	10000 n	780 n

APPENDIX D
STANDARD OPERATING PROCEDURES

APPENDIX D - CONTENTS

Standard Operating Procedure No. 1	-	Equipment Decontamination
Standard Operating Procedure No. 2	-	(not used)
Standard Operating Procedure No. 3	-	(not used)
Standard Operating Procedure No. 4	-	Groundwater Sampling
Standard Operating Procedure No. 5	-	(not used)
Standard Operating Procedure No. 6	-	Surface Soil Sampling
Standard Operating Procedure No. 7	-	Subsurface Drilling and Sampling
Standard Operating Procedure No. 8	-	Lithologic Description of Subsurface Samples
Standard Operating Procedure No. 9	-	Borehole Abandonment
Standard Operating Procedure No. 10	-	(not used)
Standard Operating Procedure No. 11	-	Identification and Description of Field Sampling Sites
Standard Operating Procedure No. 12	-	Sample Handling, Documentation, and Tracking
Standard Operating Procedure No. 13	-	Water Level Measurement
Standard Operating Procedure No. 14	-	Headspace Analysis
Standard Operating Procedure No. 15	-	Investigation-Derived Wastes
Standard Operating Procedure No. 16	-	Detection of Petroleum Hydrocarbons Using Immunoassay

1.0
TITLE PAGE

STANDARD OPERATING PROCEDURE NO. 1
EQUIPMENT DECONTAMINATION

CANNON AIR FORCE BASE
REMEDIAL INVESTIGATION
CANNON AFB, NEW MEXICO

USACE CONTRACT NO. DACW-45-93-D-0005

W-C PROJECT NUMBER C3M11MM

TABLE OF CONTENTS

Section		Page
1.0	TITLE PAGE	-1-
2.0	INTRODUCTION	-3-
3.0	RESPONSIBILITIES AND QUALIFICATIONS	-4-
4.0	PROCEDURE	-5-
4.1	EQUIPMENT LIST	-5-
4.2	DECONTAMINATION	-5-
4.2.1	Personnel	-5-
4.2.2	Sampling Equipment	-6-
4.2.3	Drilling and Heavy Equipment	-7-
4.2.4	Equipment Leaving the Site	-8-
4.2.5	Wastewater	-8-
4.2.6	Other Wastes	-9-
4.3	DOCUMENTATION	-9-
5.0	QUALITY ASSURANCE REQUIREMENTS	-10-

2.0
INTRODUCTION

The purpose of this document is to define the standard procedure for equipment decontamination for the Cannon Air Force Base project. This Standard Operating Procedure (SOP) serves as a supplement to the Quality Assurance Project Plan (QAPP) and the Field Sampling Plan (FSP). This procedure is intended to be used with the SAP and the other SOPs.

The overall objective of multimedia sampling programs is to obtain samples which accurately depict the chemical, physical, and/or biological conditions at the sampling site. Extraneous contaminant materials can be brought to a sampling location and/or introduced into the medium of interest during the sampling program (e.g., by bailing or pumping of groundwater with equipment previously contaminated at another sampling site). Trace quantities of these materials can contaminate the sample and lead to false positive analytical results and, ultimately, to an incorrect assessment of the conditions associated with the site. Decontamination of sampling equipment (e.g., bailers, pumps, tubing, soil, and sediment sampling equipment) and field support equipment (e.g., drill rigs, vehicles) is required at Cannon Air Force Base to ensure that sampling cross-contamination is prevented, and that on-site contaminants are not carried off site.

3.0
RESPONSIBILITIES AND QUALIFICATIONS

The Woodward-Clyde (W-C) Cannon AFB Project Manager is responsible for assuring that equipment decontamination is conducted according to this procedure. The Project Manager will designate qualified project staff to complete this procedure.

The designated project staff are responsible for completing the equipment decontamination process according to this procedure. They report their progress, and any problems, to the Task Leader or Project Manager. Staff members are responsible for understanding the activities assigned to them and the quality assurance requirements associated with the activities.

The W-C Project QA/QC Officer or designee will be responsible for periodically reviewing decontamination activities to assure that they are completed according to this procedure. Problems related to equipment decontamination are also the responsibility of the W-C Task Leader.

All personnel assigned to complete this procedure shall be qualified to perform the portions of the procedure assigned to them. The Project Manager will make the appraisal of qualifications and will document the qualifications in the project Quality Assurance files. The Project Manager's appraisal of qualifications will include a comparison of the requirements of the job assignment with the relevant experience and training of the prospective assignee; it will also include a determination whether future training is required, and, if required, by what method. On-the-job training is an acceptable method, provided such training is received from a person qualified to perform the trainee's assignment and the results of that training are documented.

4.1 EQUIPMENT LIST

The following is a list of equipment that may be needed to perform decontamination:

- Brushes
- Wash tubs (minimum of 3) or
- 5-gallon buckets (minimum of 3)
- Scrapers
- Steam cleaner or high-pressure sprayer (portable)
- Large metal horse trough
- Disposal drums
- Sponges
- Paper towels
- Liquinox detergent (or equivalent)
- Potable tap water
- Deionized water
- Garden-type water sprayers
- Plastic tubing for bailers
- Plastic trash bags

4.2 DECONTAMINATION

4.2.1 Personnel

A temporary personnel decontamination line will be set up around each exclusion zone. If contamination is not encountered, a dry decontamination station may be established which consists of discarding of disposable PPE.

If real-time monitoring instruments indicate that contamination has been encountered (i.e., action levels are exceeded requiring an upgrade from initial PPE levels), or if the initial PPE is B or C, a complete personnel decontamination station will be established.

The temporary decontamination line should provide space to wash and rinse boots, gloves, and all sampling or measuring equipment prior to placing the equipment into a vehicle, and a container to dispose of used disposable items such as gloves, tape, or tyvek (if used).

The decontamination procedure for field personnel shall include:

1. Glove and boot wash in a Liquinox solution
2. Glove and boot rinse
3. Duct tape removal
4. Outer glove removal
5. Coverall removal
6. Respirator removal (if used)
7. Inner glove removal

4.2.2 Sampling Equipment

The following steps will be used to decontaminate small sampling equipment, such as bailers, stainless steel trowels, stainless steel liners, plastic caps for liners, etc.:

- Personnel will dress in suitable safety equipment to reduce personal exposure.

- Gross contamination on equipment will be scraped off at the sampling site.

- Equipment that will not be damaged by water will be either steam cleaned and/or placed in a wash tub or bucket containing Liquinox or low-sudsing detergent along with potable water and scrubbed with a bristle brush or similar utensil. Equipment will be rinsed with tap water in a second wash tub or bucket followed by a double deionized water rinse applied with pump sprayers.

- The water level indicator will be decontaminated using the equipment decontamination procedure described in the third bulleted item. Care will be taken to prevent damage to equipment.

- Rinse and detergent waters will be replaced with new solutions between borings or sample locations.

- Used rinse and detergent water will be contained in 55-gallon drums or holding tanks for storage at the Old Entomology Rinse Area or area designated by Cannon AFB.

Following decontamination, equipment will be placed in a clean area or in clean plastic.

4.2.3 Drilling and Heavy Equipment

Prior to moving onto each solid waste management unit (SWMU), drilling and heavy equipment will be decontaminated at the decontamination area (Old Entomology Rinse Area). Between each boring, augers will be decontaminated downslope and a minimum of 50 feet away from sampling locations using a portable steam cleaner and large metal trough. The following steps will be used to decontaminate drilling and heavy equipment:

- Personnel will dress in suitable safety equipment to reduce personal exposure.

- Equipment showing gross contamination or having drill cuttings caked on will be scraped off with a flat-bladed scraper at the sampling site.

- Drill rig, augers, drill bits, and shovels will be sprayed with detergent water (heated to at least 160°F) by a high-pressure washer, then rinsed with potable water. Care should be taken to adequately clean the insides of the hollow-stem augers.

- Decontamination water generated at each SWMU will be contained in the trough and pumped into drums for storage at the central decontamination station. Soil cuttings generated during drilling will be contained in drums.

- Drums will be labeled with matrix, depth, location, date, SWMU and boring numbers, drum I.D. number, geologists' initials, and the Base contact, including phone number.

The designated clean area at the Old Entomology Rinse Area will be protected from potential contamination by several techniques: the setting up of exclusion zones; temporary decontamination lines set up around each exclusion zone as needed; gross contamination on equipment will be scraped off at the sampling site; used rinse and detergent water will be contained in 55-gallon drums or nonleaking holding tanks; any soil cuttings will be contained in 55-gallon drums; and following decontamination, all equipment will be placed in clean plastic or designated clean area.

Following decontamination, drilling equipment will be placed on the clean drill rig and moved to the clean area at the Old Entomology Rinse Area. If the equipment is not used immediately, it should be stored at the designated clean area at the Old Entomology Rinse Area.

4.2.4 Equipment Leaving the Site

Vehicles used for nonconstruction activities shall be cleaned on an as-needed basis as determined by the Site Safety Officer by soap and water on the outside and vacuuming the inside. Cleaning will be required for very dirty vehicles which will be leaving the area. The cleaning shall take place on site. On-site equipment such as drilling rigs will be pressure washed on site before the equipment is removed from the site to limit off-site exposure to potential contaminants.

4.2.5 Wastewater

It will be necessary to contain small volumes of used wash and rinse solutions and transport them to the central decontamination area (Old Entomology Rinse Area). This wastewater will be containerized in labeled drums and stored in a secured area at the Old Entomology Rinse Area. The SOP on Investigation-Derived Waste (No. 15) will govern the final disposal of this wastewater.

4.2.6 Other Wastes

Solid wastes such as used personal protective equipment will be collected in drums. When drums are full, they will be sealed. Each drum will be labeled with its contents and the date, using paint or other permanent marker. Drums will be stored in a secured area at the Old Entomology Rinse Area and managed according to SOP No. 15 - Investigation-Derived Wastes.

4.3 DOCUMENTATION

Sampling personnel will be responsible for documenting the decontamination of sampling and drilling equipment. The documentation will be recorded with waterproof ink in the sampler's field notebook with consecutively numbered pages. The information entered in the field book concerning decontamination should include the following:

- Decontamination personnel
- Date and start and end times
- Decontamination steps/observations
- Weather conditions
- Waste drum(s) generated and I.D. numbers

Equipment rinsate samples will be taken of the decontaminated sampling equipment to verify the effectiveness of the decontamination procedures as specified in the FSP. The rinsate procedure will include rinsing deionized water through or over a decontaminated sampling tool and collecting the rinsate water into the sample bottles, which will be sent to the laboratory for analysis. The rinsate procedure, including the sample number, will be recorded in the field notebook. The Field Manager may decide additional rinsates would be appropriate to help monitor decontamination procedures, in which case the QA/QC Officer should be notified.

1.0
TITLE PAGE

STANDARD OPERATING PROCEDURE NO. 4
GROUNDWATER SAMPLING

CANNON AIR FORCE BASE
REMEDIAL INVESTIGATION
CANNON AFB, NEW MEXICO

USACE CONTRACT NO. DACW-45-93-D-0005

W-C PROJECT NUMBER C3M11MM

TABLE OF CONTENTS

Section		Page
1.0	TITLE PAGE	-1-
2.0	PURPOSE AND SCOPE	-3-
3.0	GROUNDWATER SAMPLING PROCEDURES	-4-
3.1	EQUIPMENT LIST	-4-
3.2	SAMPLING PROCEDURE	-5-
3.2.1	Equipment Decontamination	-5-
3.2.2	Instrument Calibration	-6-
3.2.3	Well Purging	-6-
3.2.4	Sample Collection	-8-
3.2.5	Field Quality Assurance/Quality Control Procedures and Samples	-9-
3.2.5.1	Field Blanks	-10-
3.2.5.2	Duplicate Samples	-11-
3.2.5.3	Matrix Spikes and Matrix Spike Duplicates	-11-
3.3	SAMPLE IDENTIFICATION, HANDLING, AND DOCUMENTATION	-11-
3.4	DOCUMENTATION	-11-
3.4.1	Field Sampling Data Sheet	-11-
3.4.2	Field Notes	-12-
3.4.3	Well Volume Calculations	-13-
4.0	CALIBRATION	-14-
4.1	pH METER	-14-
4.2	CONDUCTIVITY METER	-15-
4.3	TURBIDITY METER	-15-

LIST OF FIGURES

FIGURE 1 WATER SAMPLE COLLECTION FIELD SHEET

2.0
PURPOSE AND SCOPE

This document defines the standard procedure for collecting groundwater samples at Cannon Air Force Base (AFB). This Standard Operating Procedure (SOP) serves as a supplement to the Quality Assurance Project Plan (QAPP) and the Field Sampling Plan (FSP). This procedure gives descriptions of equipment, field procedures, and Quality Assurance/Quality Control (QA/QC) procedures necessary to collect groundwater and surface water samples. The sample locations and frequency of collection are specified in the FSP.

This SOP is intended to be used together with the FSP and other appropriate SOPs. Health and safety procedures and equipment that will be required during the investigation are detailed in the Site Health and Safety Plan (HSP). Applicable SOPs are listed below:

- SOP No. 1 - Decontamination
- SOP No. 12 - Sample Handling, Documentation, and Tracking
- SOP No. 13 - Water Level Measurement
- SOP No. 14 - Headspace Analysis
- SOP No. 15 - Investigation-Derived Wastes

3.1 EQUIPMENT LIST

Equipment used during well purging:

- Well keys
- Water level probe with 0.01-foot increments
- Oil-water interface probe
- Assorted tools (knife, screwdriver, etc.)
- Submersible pump and appropriate power supply
- Thermometer
- Turbidity meter
- pH meter (with automatic temperature compensation)
- Conductivity meter
- Calibration fluids
- Plastic squeeze or spray bottle filled with deionized water
- Polyethylene or glass container (for field parameter measurements)
- Clean glass jar and aluminum foil for headspace analysis
- Paper towels or Kimwipes
- Calculator
- Field notebook
- Waterproof and permanent marker
- Holding tank or drum for storing purged water
- Plastic sheeting (for placing around well)
- Appropriate health and safety equipment
- Well completion information sheet
- Appropriate decontamination equipment

Equipment used during well sampling:

- Water level probe with 0.01-foot increments
- Submersible pump and appropriate power supply
- Thermometer
- Turbidity meter
- pH meter (with automatic temperature compensation)
- Conductivity meter
- Calibration fluids
- Plastic squeeze bottle filled with deionized water
- Cooler with ice
- Polyethylene or glass jar for measurement of field parameters
- Sample jars and labels. Sample bottles with preservatives added will be obtained from the analytical laboratory. Several extra sample bottles will be obtained in case of breakage or other problems.
- Paper towels
- Field notebook
- Water sample collection form
- Waterproof and permanent marker
- Well completion information sheet
- Appropriate decontamination equipment
- Appropriate health and safety equipment

3.2 SAMPLING PROCEDURE

This section gives the step-by-step procedures for collecting groundwater samples in the field. Observations made during sample collection should be recorded in the field notebook and field data sheet as specified in Section 3.4 of this SOP.

3.2.1 Equipment Decontamination

Before any purging or sampling begins, all well probes and other sampling devices shall be decontaminated. If dedicated equipment is used, it should be rinsed with distilled water prior to sampling. Mobile decontamination supplies will be provided so that equipment can be

decontaminated in the field. Each piece of purging or sampling equipment shall be decontaminated before sampling operations and between each well. The decontamination solutions shall be replaced with clean solutions between each well. Used solutions will be placed in the container with purged well water for disposal. The procedures presented in SOP No. 1, Decontamination, will be followed for decontamination of field equipment and for personnel decontamination.

3.2.2 Instrument Calibration

Electronic equipment used during sampling includes a pH meter with temperature scale and automatic temperature compensation, a conductivity meter, a turbidity meter, and a water level measurement probe. Before going into the field, the sampler shall verify that these instruments are operating properly. The pH, turbidity and conductivity meters require calibration prior to use every day and must be recalibrated if they have been turned off. Calibration times and readings will be recorded in a notebook to be kept by the field sampler. Specific instructions for calibrating the instruments are given in Section 4.0 of this SOP and in the instrument manuals.

3.2.3 Well Purging

The purpose of well purging is to remove stagnant water from the well and obtain representative water from the geologic formation being sampled while minimizing disturbance to the collected samples. Before a sample is taken, the well will be purged until a minimum of three well casing volumes have been removed and field parameters have stabilized or until the well is pumped dry. All wells shall be sampled immediately following the completion of the purge. Evacuated well water shall be contained for proper disposal, and necessary precautions shall be taken to prevent spilling of water.

Before well purging begins, the following procedures will be performed at each well:

- The condition of the outer well casing, concrete well pad, and any unusual conditions of the area around the well will be noted in the field logbook.

- Clean plastic sheeting will be placed around the well.

- The well will be opened and the date and time recorded.

- Appropriate readings will be taken in the breathing zone with an organic vapor analyzer (OVA) according to the HSP.

- The condition of the inner well cap and casing will be noted.

- The depth of static water level will be measured (to nearest 0.01 foot) and recorded from the measuring point on the well casing, the measuring point (e.g., notch on north side, top of PVC well casing) identified, and time indicated.

- The total depth of the well from the same measuring point on the casing will be measured and recorded.

- The volume of water in the well casing will be calculated in gallons based on feet of water and casing diameter. (See Section 3.4.3 for calculation of volumes.)

- From the above calculation, the three casing volumes to be evacuated will be calculated.

- An initial sample will be obtained for field measurements of temperature, conductivity, turbidity, and pH, and for observation of water quality. This sample will not be retained after these initial measurements are recorded. These measurements will also be used during the evaluation of chemical analytical data.

- Three volumes of water in the casing will be evacuated with a pump and retained for later disposal. Temperature, conductivity, turbidity, and pH measurements will be taken after evacuation of each well volume to determine whether the water chemistry has stabilized. Generally, pH values within ±0.2 pH unit, and temperature and conductivity within ±10 percent between consecutive readings for four conservative readings indicate adequate stability

of the water chemistry. Turbidity shall be less than 5 NTU before sampling occurs. If the chemistry is not stable, purging will continue, measuring pH, temperature, conductivity, and turbidity after each one-half well volume.

- If the well is pumped dry during evacuation, it will be assumed that the purpose of removing 3 well volumes of water has been accomplished, that is, removing all stagnant water which had prolonged contact with the well casing or air. If recovery is very slow, samples will be obtained as soon as sufficient water is available.

- Collect a water sample and conduct a headspace analysis as specified in SOP No. 14.

- The well will be closed and the date and time recorded.

3.2.4 Sample Collection

Samples for chemical analysis will be collected immediately after purging is completed. For slow recovering wells, the sample will be collected immediately after a sufficient volume is available. The water quality samples will be taken from within the well screen interval. The following sampling procedure is to be used at each well:

1. Decontaminated sampling equipment will be assembled.

2. Identification labels for sample bottles will be filled out for each well.

3. Fill each bottle directly from the valve or tap with as little aeration as possible. For VOCs, pump rate must be less than 0.31/min. The individual sample bottles should be filled in the order given below:

    - Volatile organic compounds (VOCs)
    - Semivolatiles organic compounds, pesticides and PCBs, and herbicides
    - Petroleum hydrocarbons
    - Total recoverable metals

- Cyanide and sulfide
- Nitrates and nitrites
- Sulfate, chloride, alkalinity, and total dissolved solids

The appropriate preservatives will be added to the sample containers by the analytical laboratory prior to shipping the containers to the site.

VOC sample vials should be completely filled so the water forms a convex meniscus at the top, then capped so that no air space exists in the vial. Turn the vial over and tap it to check for bubbles in the vial which indicate air space. If air bubbles are observed in the sample vial, discard the sample vial and repeat the procedure until no air bubbles appear.

Fill bottles for parameters other than VOCs to almost full and cap quickly.

4. Time of sampling will be recorded.

5. Measure and record water level.

6. The well cap will be replaced and locked.

7. Field documentation will be completed, including the chain-of-custody.

3.2.5 Field Quality Assurance/Quality Control Procedures and Samples

The well sampling order will be dependent on expected levels of contamination in each well, if known, and will be determined prior to sampling. Sampling will progress from the least contaminated well to the most contaminated. QA/QC samples will be collected during groundwater sampling.

Field QA/QC samples are designed to help identify potential sources of external sample contamination and evaluate potential error introduced by sample collection and handling. All QA/QC samples are labeled with QA/QC identification numbers and sent to the laboratory with the other samples for analyses.

3.2.5.1 Field Blanks

Field blanks are QC samples which check for potential external contamination of samples and may consist of equipment rinsates, ambient blanks, trip blanks, or water source blanks. Field blanks will be designated by the sample collection coordinator or the project QA/QC coordinator. The samples will be assigned a QA/QC identification number, stored in an iced cooler, and shipped to the laboratory with the other samples.

Ambient Blanks

An ambient blank is intended to check for potential contamination of samples due to contaminants present at the time of sampling. The sample bottles (same parameters for the groundwater sample) are taken to the sampling location and filled with organic-free deionized water at the time of sampling. The ambient blank is assigned a QA/QC sample identification number, stored in an iced cooler, and shipped to the laboratory on the day it is collected.

Trip Blanks

A trip blank serves as a check on sample contamination originating from the container or sample transport. One trip blank will be sent with each cooler containing analysis for volatile organics of water samples.

Rinsate Blanks

An equipment rinsate sample of sampling equipment is intended to check if decontamination procedures have been effective. For the well sampling operation, a rinsate sample will be collected from the decontaminated sampling equipment before it is used to obtain the sample. Deionized water will be rinsed over the decontaminated sampling apparatus and transferred to the sample bottles. The same parameters that are being analyzed in the groundwater samples will be analyzed in the rinsate samples. The rinsate sample is assigned a QA/QC sample identification number, stored in an iced cooler, and shipped to the laboratory on the day it is collected.

3.2.5.2 Duplicate Samples

Duplicate samples are samples collected assess precision of sampling and analysis. For the groundwater sampling a duplicate sample will be collected at the same time as the initial sample. The initial sample bottles for a particular parameter or set of parameters will be filled first, then the duplicate sample bottles for the same parameter(s), and so on until all necessary sample bottles for both the initial sample and the duplicate sample have been filled. The duplicate groundwater sample will be handled in the same manner as the primary sample. The duplicate sample will be assigned a QA/QC identification number, stored in an iced cooler, and shipped to the laboratory on the day it is collected. Duplicate samples will be collected for all parameters. Duplicate samples will be blind to the laboratory.

3.2.5.3 Matrix Spikes and Matrix Spike Duplicates

Matrix spikes (MSs) and matrix spike duplicates (MSDs) are used to assess the potential for matrix effects. Samples will be designated for MS/MSD analysis on the chain-of-custody form and on the bottle. It may be necessary to increase the sample volume for samples where the designation is to be made.

3.3 SAMPLE IDENTIFICATION, HANDLING, AND DOCUMENTATION

Samples will be identified, handled, and recorded as described in this SOP and in SOP No. 12.

3.4 DOCUMENTATION

3.4.1 Field Sampling Data Sheet

In addition to recording the field sampling data in the field book, a field sampling data sheet for groundwater samples (Figure 1) will also be completed at each sampling location. The data sheet will be completely filled in. If items on the sheet do not apply to a specific location, the item will be labeled as not applicable (NA). The information on the data sheet includes the following:

- Well number
- Date and time of sampling
- Person performing sampling
- Volume of water purged before sampling
- Depth of sample
- Conductivity, temperature, turbidity, and pH during evacuation (note number of well volumes)
- Number of samples taken
- Sample identification number
- Preservation of samples
- Record of any QC samples from site
- Headspace analysis (if taken)
- Any irregularities or problems which may have a bearing on sampling quality

3.4.2 Field Notes

Field notes shall be kept in a bound field book. The following information will be recorded using waterproof ink:

- Names of personnel
- Weather conditions
- Location and well number
- Date and time of sampling
- Condition of the well
- Decontamination information
- Initial static water level and total well depth
- Depth of sample
- Calculations (e.g., calculation of purged volume)
- Analyses that will be performed by the laboratory
- Equipment calibration information
- Headspace analysis (if taken)

3.4.3 Well Volume Calculations

The following equation shall be used to calculate the volume of water to be removed during well evacuation:

For 4-inch wells:

Evacuation Volume = (Total Well Depth - Water Level Depth) x 0.66 gal/ft = gallons/1 well casing volume
(gal) (ft) (ft)

Multiply the volume of one well casing volume by three (3) to obtain the minimum volume of water to be evacuated.

4.1 pH METER

The pH meter must be calibrated each day before taking any readings of samples and must be recalibrated during the day if it has been turned off after the initial calibration. Calibration and operation of the pH meter will follow the manufacturer's specific instructions. In general, calibration is done by adjusting the meter with standard buffers that bracket the expected pH of the field water. Calibration will consist of the following general procedures:

1. Adjust the reading of the pH meter using the intercept knob with the electrode placed in the pH 7 buffer by using the calibration knob. Rinse the electrodes with distilled water between buffer adjustments.

2. With the electrode placed in the pH 4 buffer, adjust the reading of the meter with the slope knob. Adjust using the temperature knob if the meter has no slope knob. A ph 10 buffer will be used if basic water is expected.

3. Repeat Steps 1 and 2 until the meter gives acceptable readings (±0.1 pH unit) for all the buffers used for calibration.

Note: Always use the same electrode for measurements that was used in the calibration. Recalibrate the meter if the electrode is replaced. Although the temperature setting on the pH meter often does not match the sample temperature after calibration, the pH readings wills till be accurate in these cases provided that the response to the buffers is correct.

Record the time of analysis and temperature of the buffer in the field notebook whenever the pH meter is calibrated.

4.2 CONDUCTIVITY METER

The conductivity meter must be calibrated prior to taking field measurements. Record time, temperature, and instrument response in the field notebook. Calibration is checked by noting the response of the meter to several standard conductivity solutions which bracket the values expected to be measured in the field. If the instrument has a calibration adjustment, set the response to match the standards. Otherwise, simply record in the field notebook the instrument response to each standard.

4.3 TURBIDITY METER

The turbidity meter must be calibrated each day before taking field measurements. Calibration is done by adjusting the span control to equal the value of a Gelex standard. The meter must be recalibrated if shut off during the day and at any time when there is a question as to whether or not the instrument is still in calibration (i.e., odd readings, rapid changes in readings, etc.).

WATER SAMPLE COLLECTION FIELD SHEET

SITE NAME _____ PROJECT NO. _____

SAMPLE NO. _____ WELL NO. _____

DATE/TIME COLLECTED _____ PERSONNEL _____

SAMPLE METHOD AND DEPTH _____ _____

SAMPLE MEDIA (Circle 1): Groundwater Surface Water

SAMPLE SPLIT (Circle 1): Yes No SPLIT SAMPLE NUMBER _____

FIELD DUPLICATE (Circle 1): Yes No DUPLICATE SAMPLE NUMBER _____

Sample Container	Preservative	Analysis Requested

WELL PURGING

Date _____

HNu/OVA Measurements _____

- Background _____
- Well Head _____
- Breathing Zone _____
- Time Started _____
- Time Completed _____

Well Depth (TOC) _____

Depth to Water (TOC) _____

Water Column Length _____

___" Casing _____

Volume of Water in Well _____

Casing Volumes to Purge _____

Minimum Water to Purge _____

Comments _____

FIELD MEASUREMENTS

Time	Amount Purged (gal)	pH	Temp. (°C)	Conductivity (μMHOS/cm)	Color	Odor	Turbidity

FIELD EQUIPMENT AND CALIBRATION

Instrument Model	Calibration
Water Level Indicator _____	_____
Conductivity Meter _____	_____
pH Meter _____	Before _____ After _____

Comments _____

1.0
TITLE PAGE

STANDARD OPERATING PROCEDURE NO. 6
SURFACE SOIL SAMPLING

CANNON AIR FORCE BASE REMEDIAL INVESTIGATION
CANNON AFB, NEW MEXICO

USACE CONTRACT NO. DACW-45-93-D-0005

W-C PROJECT NUMBER C3M11MM

TABLE OF CONTENTS

Section		Page
1.0	TITLE PAGE	1
2.0	TABLE OF CONTENTS	2
3.0	PURPOSE AND SCOPE	3
4.0	RESPONSIBILITIES AND QUALIFICATIONS	4
5.0	PROCEDURE	5
5.1	EQUIPMENT LIST	5
5.2	SAMPLING PROCEDURES	6
5.2.1	Equipment Decontamination	6
5.2.2	Obtaining Surface Soil Samples	6
5.2.3	Field Quality Assurance/Quality Control Procedures and Samples	7
5.3	SAMPLE HANDLING	8
5.4	DOCUMENTATION	8
5.4.1	Field Sampling Data Sheet	8
5.4.2	Field Notes	9

LIST OF FIGURES

FIGURE 1	FIELD SAMPLING DATA SHEET FOR SOIL (SURFACE OR SUBSURFACE) SAMPLES	10

3.0
PURPOSE AND SCOPE

The purpose of this document is to define the standard procedure for collecting surface soil samples for the Cannon AFB project. This Standard Operating Procedure (SOP) serves as a supplement to the Quality Assurance Project Plan (QAPP) and the Field Sampling Plan (FSP). This procedure gives descriptions of equipment, field procedures, and QA/QC procedures necessary to collect surface soil samples. The sample locations and frequency of collection are specified in the FSP.

This procedure is intended to be used together with the FSP and several other SOPs. Sample identification, labeling, handling, and chain-of-custody procedures are described in SOP No. 12. SOP No. 12 also includes the listing of sample containers, preservatives, and holding times applicable to sample collected using this SOP. SOP No. 1 describes decontamination procedures which are also applicable to this SOP.

4.0
RESPONSIBILITIES AND QUALIFICATIONS

The Woodward-Clyde (W-C) Cannon AFB Project Manager is responsible for assuring that these procedures are followed during field operations by reviewing the field notebooks and analytical data when they are available. The Project Manager will designate qualified project staff to complete this procedure and the required reviews.

The designated project staff are responsible for completing the review and reporting progress according to this procedure. They report their progress, and any problems, to the Task Leader or Project Manager. Staff members are responsible for understanding the activities assigned to them and the quality assurance requirements associated with the activities.

The W-C Project QA/QC Officer or designee will be responsible for periodically reviewing surface soil sampling activities to assure that they are being completed according to this procedure. Problems related to reporting by the field crew are also the responsibility of the W-C Task Leader.

All personnel assigned to complete this procedure shall be qualified to perform the portions of the procedure assigned to them. The Project Manager will make the appraisal of qualifications and will document the qualifications in the project Quality Assurance files. The Project Manager's appraisal of qualifications will include a comparison of the requirements of the job assignment with the relevant experience and training of the prospective assignee; it will also include a determination whether future training is required, and, if required, by what method. On-the-job training is an acceptable method, provided such training is received from a person qualified to perform the trainee's assignment and the results of that training are documented.

5.1 EQUIPMENT LIST

Equipment to be used in surface soil sampling is as follows:

- Stainless steel or Teflon-coated hand auger
- Ruler with 1/10-foot increments
- Field notebook
- Stainless steel knife
- Stainless steel spoons/trowels
- Stainless steel mixing bowl
- Sample containers supplied by analytical laboratory
- Sample container labels
- Cooler with ice and vermiculite
- Clear cellophane tape to cover labels
- Paper towels
- Camera with film
- Waterproof marking pens
- Plastic sheeting
- Plastic bags
- Electric tape
- Health and Safety Equipment as specified in the HSP

Equipment used during decontamination:

- Alconox soap (or equivalent)
- Potable tap water
- Deionized or distilled water
- Isopropanol (0.1N)
- Nitric acid (0.05N) or hydrochloric acid (0.1N)
- Large sponges

- Decontamination buckets/pails
- Several spray or squirt bottles

5.2 SAMPLING PROCEDURES

This section provides step-by-step procedures for surface soil sampling with a hand auger. Observations made during the sampling effort should be recorded in the field notebook.

5.2.1 Equipment Decontamination

Before any samples are taken, the equipment must be decontaminated according to procedures specified in SOP No. 1 and in the Site Safety and Health Plan (SSHP). Sampling equipment will be decontaminated between sampling stations and between collection of samples at different depths at the same location.

5.2.2 Obtaining Surface Soil Samples

Upon arrival at the sampling site, entries will be made into the field notebook describing the sample location number, the general appearance of soil (i.e., noticeable stains etc.) and soil cover (e.g., grass, gravel), the time of sampling, and any unusual phenomenon. A plastic sheet should be placed near the sampling station and all sampling equipment should be placed on this sheet.

Clear any existing vegetation or other foreign matter from the sampling location surface. Using the hand auger or stainless steel spoon/trowel, collect samples from the appropriate depth as specified in the FSP. An appropriate amount of sample should be collected for the sample containers. When the sample has been collected, any amount on the side of the hand auger sampler in the smear zone should be removed by using the stainless steel knife. Since loose materials can easily volatize from the 0 to 0.5-foot interval, VOC samples will not be collected from this interval. Correspondingly, the VOC samples should be collected from the other 0.5-foot intervals since the sampler will be driven 2 feet at each sampling depth. The part of the recovered sample collected for volatile organic analysis should be placed into the appropriate sample container as soon as possible. The remainder of the recovered sample should be placed in the mixing bowl as quickly as possible.

With the remaining recovered soil in the mixing bowl, the sample should be homogenized with a decontaminated mixing instrument (e.g., a stainless steel spoon). The remaining recovered soil should be divided equally into the remaining sample containers. QA/QC sample containers should be filled from the same mixtures as one of the samples. Sample containers shall be labeled in accordance with SOP No. 12 in indelible ink and covered with clear cellophane tape to preserve the integrity of the label.

5.2.3 Field Quality Assurance/Quality Control Procedures and Samples

QA/QC samples are designed to help identify potential sources of sample contamination and evaluate potential error introduced by sample collection and handling. All QA/QC samples are labeled with QA/QC identification numbers and sent to the laboratory with other samples for analysis. Specific QA/QC samples that will be collected at each SWMU are described in the FSP.

Rinsate Samples

An equipment rinsate sample of sampling equipment is intended to check if decontamination procedures have been effective. For surface soil sampling with a hand auger, a rinsate sample will be collected from the decontaminated auger. Organic free deionized water will be rinsed through the decontaminated auger and used to fill the sample bottles. The same parameters that are being analyzed in the surface soil samples will be analyzed in the rinsate samples. The rinsate sample is assigned a QA/QC sample identification number, stored in an iced cooler, and shipped to the laboratory on the day it is collected.

Duplicate Samples

Duplicate samples are samples collected to check for the natural sample variance and the consistency of field techniques and laboratory analysis. For surface soil sampling, the initial sample bottles for volatile organics will be filled first, then the sample will be homogenized and the rest of the duplicate bottles filled until all necessary sample bottles for both the initial sample and the duplicate sample have been filled. The duplicate surface soil sample will be handled in the same manner as the primary sample. The duplicate sample will be assigned

a QA/QC identification number, stored in an iced cooler, and shipped to the laboratory on the day it is collected.

Field Blanks

Field blanks check for contamination of samples due to factors at the sampling site. For a field blank, the same parameters that are being analyzed in the surface soil samples will be analyzed. Sample bottles are taken empty to the field and filled at the well site with organic-free deionized water at the time the soil sample is collected. The samples will be assigned a QA/QC identification numbered, stored in an iced cooler, and shipped to the laboratory with the other samples.

5.3 SAMPLE HANDLING

Sample containers and preservatives are specified in SOP No. 12, Sample Handling, Documentation, and Analysis. Samples will be labeled and handled as described in SOP No. 12.

5.4 DOCUMENTATION

5.4.1 Field Sampling Data Sheet

A field sampling data sheet will be completed at each sample location (Figure 1). Items not applicable to the sampling will be labeled as not applicable (NA). The information on the data sheet includes the following:

- Sampling location
- Date and time of sampling
- Person performing sampling
- Type of sample
- Type of soil cover
- Depth interval
- Soil type (describe)
- USCS Abbreviation

- Color (describe), staining (describe), odor (describe)
- Sample identification number
- Number of samples taken
- Preservation of samples
- Record of any QC samples from site
- Any irregularities or problems which may have a bearing on sample quality.

5.4.2 Field Notes

Field notes will also be kept during sampling activities. The following information will be recorded in the bound field notebook using waterproof ink:

- Names of personnel
- Weather conditions
- Date and time of sampling
- Location and sample station number
- Times that procedures and measurements are completed
- Decontamination times
- Calibration information

FIGURE 1

Field Sampling Data Sheet for Soil (Surface or Subsurface) Samples

Location Identification: Date: _____

Samplers' Signature: _____ Time: _____

Type of Sample: Surface: _____ Subsurface: _____

Type of Soil Cover: _____

Depth Interval: _____

Sample Identification: _____

Soil type (i.e. sand silt clay) _____

USCS Abbreviation _____

Color _____

Staining _____

Odor _____

Containers	Number	Preservatives

QA/QC Samples Collected: _____

Comments: _____

STANDARD OPERATING PROCEDURE NO. 7
SUBSURFACE DRILLING AND SAMPLING

CANNON AIR FORCE BASE
REMEDIAL INVESTIGATION
CANNON AFB, NEW MEXICO

USACE CONTRACT NO. DACW-45-93-D-0005

W-C PROJECT NUMBER C3M11MM

TABLE OF CONTENTS

Section		Page
1.0	TITLE PAGE	-1-
2.0	PURPOSE AND SCOPE	-3-
3.0	RESPONSIBILITIES AND QUALIFICATIONS	-4-
4.0	PROCEDURES FOR SUBSURFACE DRILLING AND SAMPLING	-5-
4.1	EQUIPMENT LIST	-5-
4.2	DRILLING METHOD	-5-
4.3	SOIL SAMPLING METHOD	-6-
4.4	DOCUMENTATION	-7-
4.4.1	Field Boring Log	-7-
4.4.2	Field Sampling Data Sheet	-7-
4.4.3	Field Notes	-8-
5.0	EQUIPMENT DECONTAMINATION PROCEDURES	-9-
5.1	DRILLING EQUIPMENT DECONTAMINATION PROCEDURES	-9-
5.2	SAMPLING EQUIPMENT DECONTAMINATION PROCEDURES	-10-
5.3	DECONTAMINATION PROCEDURE DOCUMENTATION	-11-

LIST OF FIGURES

FIGURE 1	FIELD SAMPLING DATA SHEET FOR SOIL (SURFACE OR SUBSURFACE) SAMPLES	13

2.0
PURPOSE AND SCOPE

This Standard Operating Procedure (SOP) provides technical guidance and methods for subsurface drilling and sampling at Cannon Air Force Base. Soil samples will be collected for field screening (i.e., headspace and visual analysis) and identifying the soil types and submitted for chemical analysis.

This SOP serves as a supplement to the Quality Assurance Project Plan (QAPP) and the Field Sampling Plan (FSP). This SOP is intended to be used with the FSP and other SOPs, such as SOP No. 8, Lithologic Description of Subsurface Samples and SOP No. 14, Headspace Analysis.

The step-by-step procedures described herein are sufficiently detailed to allow field personnel to properly perform subsurface drilling and sampling.

3.0
RESPONSIBILITIES AND QUALIFICATIONS

The Woodward-Clyde (W-C) Cannon AFB Project Manager is responsible for assuring that subsurface drilling and sampling are performed in accordance with this Standard Operating Procedure. This Project Manager will designate qualified project staff to complete this procedure and the required reviews.

The designated project staff are responsible for performing subsurface drilling and sampling according to this procedure. They report their progress, and any problems, to the Task Leader or Project Manager. Staff members are responsible for understanding the activities assigned to them and the quality assurance requirements associated with the activities.

The W-C Project QA/QC Officer or designee will be responsible for periodically reviewing the activities associated with this procedure to assure that subsurface drilling and sampling are being completed according to this procedure.

All personnel assigned to complete this procedure shall be qualified to perform the portions of the procedure assigned to them. The Project Manager will make the appraisal of qualifications and will document the qualifications in the project Quality Assurance files. The Project Manager's appraisal of qualifications will include a comparison of the requirements of the job assignment with the relevant experience and training of the prospective assignee; it will also include a determination whether future training is required, and, if required, by what method. On-the-job training is an acceptable method, provided such training is received from a person qualified to perform the trainee's assignment and the results of that training are documented.

4.1 EQUIPMENT LIST

The following is a list of soil sampling equipment:

- Split-spoon sampler, 3-inch O.D. (stainless steel)
- Cement for grouting (portland cement, Type II or V)
- Stainless steel mixing bowl
- Stainless steel stirring devices
- High-pressure steamer/sprayer (provided by drilling contractor)
- Long-handled bristle brushes
- Wash/rinse tubs
- Liquinox detergent
- Auger rig with appropriate equipment for drilling and sampling
- Weighted tape measure
- Water level probe
- Drums for containment of cuttings
- Appropriate health and safety equipment
- Logbook
- Boring log forms
- Tape (electrical and Teflon)
- Waterproof markers and labels
- Paper towels
- Baggies, ziploc bags
- Large plastic bags

4.2 DRILLING METHOD

Borings will be drilled using a truck-mounted drilling rig utilizing hollow-stem augers. No water may be introduced into the boreholes. No bentonite, barite, polymers, or other additives or viscosifying agents will be introduced into the borehole or used during drilling.

If lubrication is required on the drill pipe joints, Teflon tape or vegetable oil is acceptable. The rig shall be free of leaks which could contaminate the boreholes (i.e., hydraulic fluid, oil, gas, etc.).

Health and Safety equipment specified in the Site Safety and Health Plan (SSHP) will be donned before proceeding with subsurface drilling and soil sampling. The SSHP will specify action levels for various contaminants and the field monitoring required to measure ambient conditions.

All work areas around exploratory borings will be restored to a physical condition equivalent to that of predrilling, as near as practical. This will include drill cuttings removal and rut removal.

All drill cuttings will be containerized and moved to a central secured location for storage. Containers (drums) will be sealed, labeled with a paint pen, and recorded so that their contents can be identified as to material, source, and depth. Multiple drums from that same boring will have approximate depths labeled on each drum. The labeling will be such that it will be legible for the length of time that may transpire before final disposal of the drummed contents. The disposal of soil will be dependent on laboratory analytical results.

4.3 SOIL SAMPLING METHOD

Intact subsurface soil samples will be taken for physical description and chemical analyses. Samples will be collected as outlined in the Field Sampling Plan. Sampling will be done in advance of the lead auger to minimize potential cross-contamination. Samples will be collected with a stainless steel split-spoon sampler. The sampler will be driven with a 140-pound hammer and 30-inch drop for a total of 2 feet. Standard blow counts will be recorded for driving the sampler 6, 12, 18, and 24 inches, according to ASTM Method D 1586-84 with the N-value being the sum of the second and third 0.5-foot interval. Provisions will be made to use other sample collection methods if this method results in poor sample recovery in some depth intervals. Soil grab samples for volatile organic analyses will be obtained by subsampling the material retrieved in the split spoon. Subsampling will be done immediately upon opening the split spoon, and shall be done as soon as possible once the split-spoon sample is taken from the boring. The portion of the split-spoon sample which

represents slough will not be sampled. Compositing of soil samples for nonvolatile chemical analyses shall be performed in a stainless steel bowl using stainless steel stirring devices.

Soil samples from split-spoon samplers that are to undergo chemical and geotechnical analyses will be placed in glass or plastic jars with airtight, screw-type lids. A sample volume adequate for the analysis to be conducted will be collected. Minimum information on each sample container will include the project name, date, boring number, sample number, and depth of sample. The MRD LIMS number (see Section 6.1 in QAPP) will be included on all QA samples. All information that appears on the container will also appear on the boring log. Sample handling, documentation, and analysis procedures are more fully discussed in SOP No. 12.

4.4 DOCUMENTATION

4.4.1 Field Boring Log

A copy of the USACE Omaha District HTW field boring log is shown as Figure 1 in SOP No. 8. The appropriate spaces for drilling method and equipment shall be completed prior to drilling.

4.4.2 Field Sampling Data Sheet

In addition to recording the field sampling data on the HTW boring log, a field sampling data sheet will also be completed at each sample location (Figure 1). Items not applicable to the sampling will be labeled as not applicable (NA). The information on the data sheet includes the following:

- Sampling location
- Date and time of sampling
- Person performing sampling
- Soil type (describe), USCS Abbreviation
- Color (describe), staining (describe), odor (describe)
- Sample identification number
- Number of samples taken

- Preservation of samples
- Type of sample
- Type of soil cover
- Depth interval
- Record of any QC samples from site
- Any irregularities or problems which may have a bearing on sampling quality.

4.4.3 Field Notes

Field notes will also be kept during sampling activities. The following information will be recorded in the bound field notebook using waterproof ink:

- Names of personnel
- Weather conditions
- Date and time of sampling
- Location and sample station number
- Times that procedures and measurements are completed
- Decontamination times
- Calibration information

5.0
EQUIPMENT DECONTAMINATION PROCEDURES

Specific equipment decontamination procedures are described in the following paragraphs. Equipment decontamination will include:

- Drilling equipment decontamination (augers, drill stems, drill bits, other downhole equipment) will be conducted prior to drilling and between each boring location. Before any equipment is removed from the site, it will be decontaminated according to the procedure for decontamination of drilling and heavy equipment described in SOP No. 1.

- Sampling equipment decontamination (stainless steel split-spoon samplers, stainless steel stirring devices, etc.) will be conducted between individual sampling points to minimize potential cross-contamination. Soil sampling will require one clean stainless steel split-spoon sampler per sample. Sampling equipment will be decontaminated between each sample according to the procedure for decontamination of sampling equipment described in SOP No. 1.

5.1 DRILLING EQUIPMENT DECONTAMINATION PROCEDURES

Augers will be scraped off as they are withdrawn from a boring. The cuttings will be disposed of as outlined in Section 4.2. The following step in accordance with SOP No. 1, will be used to decontaminate drilling and heavy equipment:

- Personnel will dress in suitable safety equipment to reduce personal exposure.

- Equipment showing gross contamination or having drilling cuttings caked on will be scraped off with a flat-bladed scraper. The scrapings will be containerized. Drill cuttings should not be washed down the drain.

- Equipment that will not be damaged by water, such as drill rigs, augers, drill bits, and tools will be sprayed with detergent water by a high-pressure steamer,

then rinsed with clear potable water. This water will be obtained at an approved source.

- Decontamination will continue until all equipment is devoid, both inside and out, of any asphaltic, bituminous, or other encrusting or coating materials, such as grease, gravel, and soil.

Following decontamination, drilling equipment will be placed on the clean drill rig and moved to a clean area. If the equipment is not used immediately, it should be stored in a designated secure, clean area and covered with plastic sheeting.

Drilling equipment will be decontaminated prior to drilling, between each boring, and prior to leaving the site. Decontamination will occur at the designated decontamination area.

5.2 SAMPLING EQUIPMENT DECONTAMINATION PROCEDURES

The following steps in accordance with SOP No. 1, will be used to decontaminate sampling equipment:

- Personnel will dress in suitable safety equipment to reduce personal exposure.

- Equipment showing gross contamination will be placed in a wash tub and the gross contamination will be scraped off with a flat-bladed scraper. The scrapings will be containerized.

- Equipment that will not be damaged by water will be placed in a wash tub containing Liquinox (or low-sudsing detergent) along with potable water and scrubbed with a bristle brush or similar utensil. Equipment will be rinsed with clear potable water, in a second wash tub or bucket, followed by a double deionized water rinse.

- When sampling for organic volatiles, semivolatiles, or pesticides/PCB, the potable water rinse of the equipment will be followed by a double distilled or deionized water rinse.

- Equipment that may be damaged by water, such as an HNu or OVA, will be carefully wiped clean using a sponge and detergent water, and rinsed with deionized water. Oily or tarry contamination will be removed by sparing use of a solvent followed by a sponge and deionized water wipe-off. Care will be taken to prevent any equipment damage.

- Detergent waters will be replaced between borings. Rinse waters will be contained in pump sprayers to prevent used rinse water from contaminating subsequent samples.

Following decontamination, sampling equipment will be placed in a clean area on clean plastic sheeting to prevent contact with contaminated soil. If the equipment is not used immediately, it will be covered or wrapped in plastic sheeting to minimize potential airborne contamination.

Decontamination of all soil sampling equipment that will contact the sample will occur between samples.

5.3 DECONTAMINATION PROCEDURE DOCUMENTATION

Sampling personnel will be responsible for documenting the decontamination of sampling and drilling equipment. The documentation will be recorded with waterproof ink in the sampler's field notebook with consecutively numbered pages. The information entered in the field book concerning decontamination should include the following:

- Decontamination personnel
- Date and start and end times
- Decontamination steps/observations
- Weather conditions

FIGURE 1

Field Sampling Data Sheet for Soil (Surface or Subsurface) Samples

Location Identification: _____ Date: _____

Samplers' Signature: _____ Time: _____

Type of Sample: Surface: _____ Subsurface: _____

Type of Soil Cover: _____

Depth Interval: _____

Sample Identification: _____

Soil type (i.e. sand silt clay) _____

USCS Abbreviation _____

Color _____

Staining _____

Odor _____

Containers	Number	Preservatives

QA/QC Samples Collected: _____

Comments: _____

1.0
TITLE PAGE

STANDARD OPERATING PROCEDURE NO. 8
LITHOLOGIC DESCRIPTION OF SUBSURFACE SAMPLES

CANNON AIR FORCE BASE REMEDIAL INVESTIGATION
CANNON AFB, NEW MEXICO

USACE CONTRACT NO. DACW-45-93-D-0005

W-C PROJECT NUMBER C3M11MM

2.0

TABLE OF CONTENTS

Section		Page
1.0	TITLE PAGE	1
2.0	TABLE OF CONTENTS	2
3.0	PURPOSE AND SCOPE	3
4.0	RESPONSIBILITIES AND QUALIFICATIONS	4
5.0	PROCEDURES FOR LITHOLOGIC LOGGING OF BOREHOLES	5

LIST OF TABLES

TABLE 1	LOG DESCRIPTORS FOR SOIL SAMPLES	9

LIST OF FIGURES

FIGURE 1	EXAMPLE BORING LOG FORM	12

3.0
PURPOSE AND SCOPE

This Standard Operating Procedure (SOP) provides technical guidance and methods for the lithologic logging of boreholes at Cannon Air Force Base. This SOP serves as a supplement to the Quality Assurance Project Plan (QAPP). This SOP is intended to be used with the QAPP and other SOPs, such as SOP No. 7, Subsurface Drilling and Soil Sampling.

The step-by-step procedures described herein are sufficiently detailed to allow field personnel to properly log boreholes.

4.0
RESPONSIBILITIES AND QUALIFICATIONS

The Woodward-Clyde (W-C) Cannon AFB Project Manager is responsible for assuring that lithologic logging of boreholes is performed in accordance with this Standard Operating Procedure. This Project Manager will designate qualified project staff to complete this procedure and the required reviews.

The designated project staff are responsible for logging boreholes according to this procedure. They report their progress, and any problems, to the Task Leader or Project Manager. Staff members are responsible for understanding the activities assigned to them and the quality assurance requirements associated with the activities.

The W-C Project QA/QC Officer or designee will be responsible for periodically reviewing the activities associated with this procedure to assure that borehole logging is being completed according to this procedure.

All personnel assigned to complete this procedure shall be qualified to perform the portions of the procedure assigned to them. The Project Manager will make the appraisal of qualifications and will document the qualifications in the project Quality Assurance files. The Project Manager's appraisal of qualifications will include a comparison of the requirements of the job assignment with the relevant experience and training of the prospective assignee; it will also include a determination whether future training is required, and, if required, by what method. On-the-job training is an acceptable method, provided such training is received from a person qualified to perform the trainee's assignment and the results of that training are documented.

5.0
PROCEDURES FOR LITHOLOGIC LOGGING OF BOREHOLES

A "site geologist" (geologist or geotechnical engineer) experienced in borehole drilling and soil sampling will be present at each operating drill rig. This site geologist will be responsible for logging samples, preparing samples for shipment to the laboratory for analyses, monitoring drilling operations, recording water losses or gains and groundwater data, and preparing boring logs.

All boring logs will subscribe to the following requirements:

- The boring log will be the form presented in Figure 1.
- Logs will be prepared in the field, as borings are drilled, by the site geologist. Each log will be signed by the preparer.
- All log entries will be printed. Photo reproductions will be clear and legible. Copies will be submitted to USACE-PM as borings are completed.
- Borehole depth information will be recorded to the nearest 0.1 foot.
- All relevant information blanks in the log heading and log body will be completed. If surveyed horizontal control is not available at the time of drilling, location sketches referenced by measuring distances or prominent surface features shall be shown on, or attached to, the log.
- A scale of 1 inch on the log form equalling 1 foot of boring will be used.
- Each and every material type encountered will be described on the log form. Material types will be logged directly from samples and indirectly interpolated using professional judgement, drill cuttings, drill action, etc., between sampling intervals. The descriptions of intact soil samples will include the parameters listed in Table 1.

- Materials classifications will be in accordance with the Unified Soil Classification System (equivalent to ASTM D2487). Soil classifications will be made in the field at the time of sampling by the site geologist and are subject to change based on laboratory tests and subsequent review.

- In the field, visual estimates of the volume of secondary soil constituents can be reported by such terms as "trace" (1-10 percent), "little" (10-20 percent), "some" (20-35 percent), and "and" (35-50 percent) or by an estimated specific percentage. The quantitative range of each of the terms used is to be defined either within a general legend or on each log.

- When used to supplement other sampling techniques, auger-flight cutting samples will be described in terms of the appropriate soil parameters, to the extent practical. "Classification" will be minimally described for these samples, along with a description of drill action and water losses/gains for the corresponding depth. Notations will be made on the log that these descriptions are based on observations of material other than samples; e.g., "from cuttings."

- The drilling equipment used will be described on each log. Information such as drill rod size, bit size and type, and rig manufacturer and model will be recorded.

- All special problems encountered during drilling and their resolution will be recorded on the log. This would include sudden tool drops, unrecovered tools in the borehole, and lost casings.

- The dates for the start and completion of borings will be recorded on the boring log. Changes in shift, day, driller, and site geologist will also be noted on the boring log.

- Stratigraphic/lithologic changes will be identified on the boring log by a solid horizontal line at the appropriate scale depth on the log which corresponds to measured borehole depths at which changes occur, measured and recorded to the nearest 0.1 foot. Gradational transitions and changes identified from

cuttings or methods other than direct observation and measurement will be identified by a horizontal dashed line at the appropriate scale depth based on the best judgement of the logger.

- Logs will clearly show the depth intervals from which all samples are retained. The sampler type, diameter, and length of sampled interval and length (or percent) of sample recovery will be recorded for each driven or cored sample.

- Logs will identify the depth at which water is first encountered, the depth of water at the completion of drilling, and the stabilized depth to water. The absence of water in borings will also be indicated. Stabilized water level data will include time allowed for levels to stabilize.

- Logs will show borehole and sample diameters and depths at which drilling or sampling methods or equipment change.

- Logs will show total depth of penetration and sampling. The bottom of the hole will be so identified on the log by solid double lines from margin to margin with the notation "bottom of hole."

- Logs will identify any drilling fluid (water) losses, including depths at which they occur, rate of loss and total volume lost.

- Logs will show blow counts, hammer type and weight, and length of hammer fall for driven samplers. Blow counts will be recorded in half-foot increments when a standard penetration test is performed. For penetration less than a half-foot, the count will be annotated with the distance over which the count was taken. Refusal, if reached, will be noted.

- Logs will include all other information relevant to a particular investigation, but not limited to:

  - Odors
  - HNu/OVA measurements or other field screening or test results

- Any observed evidence of contamination in samples, cuttings, or drilling fluid

- Significant color changes in the drilling fluid return will be recorded, even when intact soil samples or rock core are being obtained. The color change (from and to), depth at which change occurred, and a lithologic description of the cuttings before and after the change will be recorded.

- Special abbreviations used on a log will be defined either in the log where used, or in a general legend.

- Readings of instruments used to detect organic vapors, toxic or explosive gases, and oxygen will be recorded on the log, if these instruments are used. This includes readings taken at the annulus of the borehole, of an individual sample, or at a certain depth within the borehole.

TABLE 1

LOG DESCRIPTORS FOR SOIL SAMPLES

Parameter	Example
Depositional Environment and Formation, (if named and if known)	glacial till, Twin Cities Formation
Unified Soil Classification System	Sandy Clay
Secondary Components and Estimated Quantities either by percentages or by descriptive percentage ranges (Note: terms used to indicate ranges should be described on the log or in a general legend)	sand: fine, with trace of med.
Color	gray
Consistency (cohesive soil). Use relative term	very soft, soft, medium, stiff, very stiff, hard
Density (non-cohesive soil). Use relative term	loose, medium, dense, very dense
Moisture Content. (Use relative term. Do not express as a percentage unless a value has been measured)	dry, damp, moist, wet, saturated
Texture/Fabric/Bedding	no apparent bedding, numerous vertical iron-stained tight fractures
Grain Angularity	rounded sand grains
Sorting (sands)	poorly sorted
Structure	slickensides
Grain or fragment size	coarse
Note "Fill", "Top of Natural Ground", and "Top of Bedrock" where appropriate	

1.0
TITLE PAGE

STANDARD OPERATING PROCEDURE NO. 9
BOREHOLE ABANDONMENT

CANNON AIR FORCE BASE REMEDIAL INVESTIGATION
CANNON AFB, NEW MEXICO

USACE CONTRACT NO. DACW-45-93-D-0005

W-C PROJECT NUMBER C3M11MM

2.0
TABLE OF CONTENTS

Section		Page
1.0	TITLE PAGE	1
2.0	TABLE OF CONTENTS	2
3.0	PURPOSE AND SCOPE	3
4.0	RESPONSIBILITIES AND QUALIFICATIONS	4
5.0	PROCEDURE FOR BOREHOLE ABANDONMENT	5

3.0
PURPOSE AND SCOPE

The purpose of this document is to define the Standard Operating Procedure (SOP) for borehole abandonment at Cannon Air Force Base.

This SOP serves as a supplement to the Quality Assurance Project Plan (QAPP) and the Field Sampling Plan (FSP). This SOP is intended to be used with the FSP and other SOPs.

The step-by-step procedures described herein are sufficiently detailed to allow field personnel to properly perform abandonment.

4.0
RESPONSIBILITIES AND QUALIFICATIONS

The Woodward-Clyde (W-C) Cannon AFB Project Manager is responsible for assuring that borehole abandonment is performed in accordance with this Standard Operating Procedure. This Project Manager will designate qualified project staff to complete this procedure and the required reviews.

The designated project staff are responsible for performing borehole abandonment according to this procedure. They report their progress, and any problems, to the Task Leader or Project Manager. Staff members are responsible for understanding the activities assigned to them and the quality assurance requirements associated with the activities.

The W-C Project QA/QC Officer or designee will be responsible for periodically reviewing the activities associated with this procedure to assure that borehole abandonment is being completed according to this procedure.

All personnel assigned to complete this procedure shall be qualified to perform the portions of the procedure assigned to them. The Project Manager will make the appraisal of qualifications and will document the qualifications in the project Quality Assurance files. The Project Manager's appraisal of qualifications will include a comparison of the requirements of the job assignment with the relevant experience and training of the prospective assignee; it will also include a determination whether future training is required, and, if required, by what method. On-the-job training is an acceptable method, provided such training is received from a person qualified to perform the trainee's assignment and the results of that training are documented.

5.0
PROCEDURE FOR BOREHOLE ABANDONMENT

Abandonment is the procedure by which any boring (or well) is permanently closed. Abandonment procedures should preclude any current or subsequent discharges from entering the abandoned boring or well and thereby terminate access to the subsurface environment through that borehole.

Upon completion of soil sampling and advancement of the boring to its predetermined depth, the soil boring will be abandoned immediately, unless saturated conditions have been encountered. For borings encountering saturated conditions, a 24-hour groundwater level will be measured before backfilling. Borings left open overnight will be covered to lessen the potential for injury to personnel and to minimize the potential for any surface drainage to enter the boring. The following steps will be performed to abandon a boring:

1. All boreholes to be abandoned regardless of depth will be grouted. Upon completion of drilling, the borings will be grouted subsequent to the removal of the hollow-stem augers. Grouting will be accomplished by placing a tremie pipe to the bottom of the boring and pumping grout through this pipe until undiluted grout flows from the boring at ground surface. The grout mix will be in proportions of one sack (94 pounds) of Portland cement, 3-5 pounds of powdered bentonite, and a maximum of 7 gallons of water. The bentonite will be well mixed with the water prior to adding the cement. Twenty-four hours after grouting, the borehole will be checked for grout settlement and will be topped off to the ground surface with grout, if necessary.

2. Upon completion of the boring, all downhole equipment will be scraped clean as it is withdrawn from the hole. Decontamination and cuttings disposal will be performed in accordance with SOP No. 1, Equipment Decontamination and SOP No. 7, Subsurface Drilling and Soil Sampling.

3. Where borings penetrate surface pavements, walkways, or sidewalks, it will be necessary to patch the pavement surface following backfilling. Concrete pavements should be filled with low slump (less than 4 inches) concrete mix. Asphaltic concrete

pavements should be filled with asphaltic concrete patch mix and thoroughly compacted by ramming. The surface of any patch should be screeded level upon completion. In freezing weather, the concrete mix must be protected from freezing for 48 hours after placement.

4. For each abandoned boring, a record on the boring log as well as in the field log book will be provided after the abandonment is completed. The record will include the data listed below; all depths should be measured from the ground surface.

   a. Project name and boring designation

   b. Location with respect to any replacement boring

   c. Open depth prior to grouting and depth to which grout pipe was placed

   d. Copy of the boring log

   e. Description and total quantity of grout used initially

   f. Description and daily quantities of grout used to compensate for settlement

   g. Dates of grouting

   h. Water level prior to grouting and date measured

1.0
TITLE PAGE

STANDARD OPERATING PROCEDURE NO. 11
IDENTIFICATION AND DESCRIPTION OF FIELD SAMPLING SITES

CANNON AIR FORCE BASE
REMEDIAL INVESTIGATION
CANNON AFB, NEW MEXICO

USACE CONTRACT NO. DACW-45-93-D-0005

W-C PROJECT NUMBER C3M11MM

TABLE OF CONTENTS

Section		Page
1.0	TITLE PAGE	-1-
2.0	TABLE OF CONTENTS	-2-
3.0	PURPOSE AND SCOPE	-3-
4.0	RESPONSIBILITIES AND QUALIFICATIONS	-4-
5.0	IDENTIFICATION AND DESCRIPTION PROCEDURE	-5-
5.1	EQUIPMENT LIST	-5-
5.2	PROCEDURE	-5-
5.3	DOCUMENTATION	-6-

3.0
PURPOSE AND SCOPE

The purpose of this document is to define the procedure for identification and description of field sampling sites for the remedial investigation (RI) activities at Cannon Air Force Base (Cannon AFB), Clovis, New Mexico. This standard operating procedure (SOP) serves as a supplement to the Quality Assurance Project Plan (QAPP) and the Field Sampling Plan (FSP). Sampling sites will be selected as described in the FSP. The purpose of this procedure is to identify sampling site locations which are not identified by another structure, such as a manhole, and to describe the site in such a manner that the site may be relocated for future investigative work at the site and/or for repetitive sampling.

4.0
RESPONSIBILITIES AND QUALIFICATIONS

The Woodward-Clyde (W-C) Cannon AFB Project Manager is responsible for assuring that identification and description of field sampling sites are performed according to this procedure. The Project Manager will designate qualified project staff to complete this procedure and the required reviews.

The designated project staff are responsible for field sampling site identification according to this procedure. They report their progress and any problems, to the Task Leader or Project Manager. Staff members are responsible for understanding the activities assigned to them and the quality assurance requirements associated with the activities.

The W-C Project QA/QC Officer or designee will be responsible for reviewing the field sampling site identification to assure this procedure is being followed.

All personnel assigned to complete this procedure shall be qualified to perform the portions of the procedure assigned to them. The Project Manager will make the appraisal of qualifications and will document the qualifications in the project Quality Assurance files. The Project Manager's appraisal of qualifications will include a comparison of the requirements of the job assignment with the relevant experience and training of the prospective assignee; it will also include a determination whether future training is required, and, if required, by what method. On-the-job training is an acceptable method, provided such training is received from a person qualified to perform the trainee's assignment and the results of that training are documented.

5.0
IDENTIFICATION AND DESCRIPTION PROCEDURE

5.1 EQUIPMENT LIST

- Fluorescent orange spray paint
- Survey stakes
- Fluorescent orange survey flagging
- Metal spikes/pins
- Camera and film
- Field notebook
- Waterproof pens and markers
- 100-foot measuring tape (marked in tenths of feet)

5.2 PROCEDURE

Some field sampling sites, such as monitoring wells, will have been previously located and surveyed, and are currently identified. The surface soil and subsurface soil boring locations cited as part of this investigation will require documentation of location for future reference. Prior to conducting sampling activities, this documentation will consist of clearly marking the sampling site with a stake marked with the sampling site location as specified in the FSP. The location will be measured using a measuring tape and described to the nearest tenth (0.1) foot from a permanent monument (i.e., fence post, concrete pad) or as directed by the FSP. This information will be recorded in the field notebook for future reference.

Following completion of sampling at a surface sample site, the sample site identification stake will be replaced and remarked as needed. For subsurface soil borings, which are grouted, a steel pin/spike will be placed "head up" in the center of the grout in addition to placing the sample site identification stake next to the abandoned soil boring. Prior to leaving the sampling site, a photograph should be taken which would allow some sort of sample site reconstruction if necessary (i.e., have identifiable permanent features as part of the photograph). All photography on base shall be done in accordance with direction and security protocol as defined by the Base Environmental Management Flight.

At the completion of the field activities, all sample site locations will be surveyed for horizontal location and vertical elevation from a permanent monument based on the Cannon AFB coordinate system by a New Mexico Registered Surveyor. At each site, all aboveground and, where possible, underground physical features shall be either verified with previous report mapping or determined as required. All aboveground physical features will be located/verified to the nearest foot. Permanent control monuments shall be placed in accessible locations within the limits of the work if existing permanent monuments are not located within 1,000 feet of a site. One set of monuments is allowable for adjacent sites. These monuments shall be set no closer than 500 feet to each other. Coordinates and elevations shall be established to the closest 0.01-foot for each monument. The location, identification, coordinates, and elevations of the wells and monuments shall be plotted on maps with a scale large enough to show their location with reference to other structures at the individual sites. A tabulated list of the monitoring wells and monuments, copies of all field books, and all computation sheets shall be prepared and submitted to W-C and the USACE. The tabulation shall consist of the designated number of the well or monument, the X and Y coordinates, and all the required elevations.

5.3 DOCUMENTATION

Identification and a description of each sampling site will be recorded in the field notebook. That information should include the following at a minimum:

- Sample site location identification
- Date of location installation
- Description of sample site location
- Type of sample site
- Description of installed marker
- Sample site location distance relative to/from permanent base landmark
- Location installer name

Photographs will be taken of the sample site location and recorded in the field notebook. Information concerning the photograph to accompany the above information is as follows:

- Roll number
- Photo number
- Photo direction
- Sampling site locations
- Points of intercept/scale in photograph

1.0
TITLE PAGE

STANDARD OPERATING PROCEDURE NO. 12
SAMPLE HANDLING, DOCUMENTATION, AND TRACKING

CANNON AIR FORCE BASE
REMEDIAL INVESTIGATION
CANNON AFB, NEW MEXICO

USACE CONTRACT NO. DACW-45-93-D-0005

W-C PROJECT NUMBER C3M11MM

TABLE OF CONTENTS

Section		Page
1.0	TITLE PAGE	-1-
2.0	PURPOSE AND SCOPE	-4-
3.0	RESPONSIBILITIES AND QUALIFICATIONS	-5-
4.0	PROCEDURES FOR SAMPLE HANDLING, DOCUMENTATION, AND ANALYSIS	-6-
4.1	SAMPLE LABELING	-6-
4.2	SAMPLE HANDLING	-9-
4.2.1	Sampling Containers	-9-
4.2.2	Sample Preservation	-9-
4.3	SAMPLE HANDLING AND SHIPPING	-9-
4.3.1	Holding Times and Analyses	-10-
4.4	SAMPLE DOCUMENTATION AND TRACKING	-10-
4.4.1	Field Notes	-10-
4.4.2	A-E Daily Quality Control Report	-11-
4.4.3	Sample Chain-Of-Custody	-12-

LIST OF TABLES

TABLE 1 SAMPLE CONTAINERS, PRESERVATIVES, AND HOLDING TIMES FOR SOIL SAMPLES
TABLE 2 SAMPLE CONTAINERS, PRESERVATIVES, AND HOLDING TIMES FOR WATER SAMPLES

LIST OF FIGURES

FIGURE 1 COMPLETED SAMPLE LABEL
FIGURE 2 EXAMPLE A-E DAILY QUALITY CONTROL REPORT
FIGURE 3 EXAMPLE CHAIN-OF-CUSTODY FORM

2.0
PURPOSE AND SCOPE

The purpose of this document is to define the standard procedures for sample handling, documentation, and analysis for the Cannon Air Force Base project. This Standard Operating Procedure (SOP) serves as a supplement to the Quality Assurance Project Plan (QAPP) and the Field Sampling Plan (FSP). This procedure is intended to be used together with the FSP and other SOPs and is referenced in all SOPs that apply to sampling.

3.0
RESPONSIBILITIES AND QUALIFICATIONS

The Woodward-Clyde (W-C) Cannon AFB Project Manager is responsible for assuring that samples are handled, documented, and analyzed according to this procedure. The Project Manager will designate qualified project staff to complete this procedure and the required reviews.

The designated project staff are responsible for sample handling and documentation according to this procedure. They report their progress and any problems, to the Task Leader or Project Manager. Staff members are responsible for understanding the activities assigned to them and the quality assurance requirements associated with the activities.

The W-C Project QA/QC Officer or designee will be responsible for periodically reviewing sample handling and tracking activities to assure that they are being completed according to this procedure. The W-C Field Task Leader will be designated to assist in this process.

All personnel assigned to complete this procedure shall be qualified to perform the portions of the procedure assigned to them. The Project Manager will make the appraisal of qualifications and will document the qualifications in the project Quality Assurance files. The Project Manager's appraisal of qualifications will include a comparison of the requirements of the job assignment with the relevant experience and training of the prospective assignee; it will also include a determination whether future training is required, and, if required, by what method. On-the-job training is an acceptable method, provided such training is received from a person qualified to perform the trainee's assignment and the results of that training are documented.

4.0
PROCEDURES FOR SAMPLE HANDLING, DOCUMENTATION, AND ANALYSIS

4.1 SAMPLE LABELING

All sample labels should be filled out with waterproof ink and numbered. Soil samples collected in stainless steel liners will be capped immediately following collection and a completed label attached. For soil samples collected in jars and sample bottles for groundwater analyses, sample labels should be completed and attached prior to sample collection. A typical sample label is shown as Figure 1.

Labels may be partially completed prior to sample collection. The date, time, sampler's initials, and the sample identification number should not be completed until the time of sample collection. At a minimum, each numbered label shall contain the following information:

- Project/Facility (Cannon)
- Grab or composite sample
- Sampler's company affiliation
- Date and time of sample collection
- Analyses required
- Preservation used
- Sampler's initials
- Filtered (if applicable)
- MRD LIMS No. identified if sample is collected for USACE MRD Laboratory
- Sample identification (see below)

The sample designation system for all field analytical and quality assurance/quality control (QA/QC) samples is a three letter and eleven digit/letter unique identification for each sample (CANXXX-YYYY-ZZZZ). CANXXX is the facility identifier with CAN identifying Cannon AFB and XXX identifying the specific SWMU. The next four digits/letters (YYYY) identifies the specific sampled location. At Cannon AFB these include soil boring number,

surface soil location number, or monitoring well number. All sample location numbers are SWMU-specific with the first three numbers corresponding to the SWMU while the fourth number or letter corresponds to the specific soil boring, surface soil, or monitoring well location. The last four digits (ZZZZ) are the sample identifier. The first number corresponds to the type of sample (i.e., 0 for soil (analytical), 2 for groundwater, 6 for soil MS/MSD, and 7 for water MS/MSD). The last 3 numbers correspond to the beginning depth of the sample in feet BGS for all soil samples. The following is an example of an identification number:

```
                                   Soil (Analytical)
                        SWMU#46    |
CAN  046  -  0461  -  0000
|    |      |
Cannon  SWMU#   Boring #1   Approximate Depth of Top of Sample in Ft-BGS
AFB     46
```

Multiple soil samples could be collected from the same boring; multiple water samples could be collected from the same monitoring well. The last three digits differentiate among these multiple samples. The soil sample identifier will represent the beginning depth at which the sample was collected. Groundwater samples from a given monitoring well may be numbered sequentially.

All QA/QC samples will be identified at the location where they were collected, and assigned a unique identification number following the same procedure above except for the last four digit (ZZZZ) number. The first two numbers of the QA/QC sample identifier correspond to a particular SWMU:

- 03 - SWMU No. 3 - Oil/Water Separator
- 05 - SWMU No. 5 - Oil/Water Separator
- 16 - SWMU No. 16 - Oil/Water Separator
- 48 - SWMU No. 48A - Underground Storage Tank
- 49 - SWMU No. 48B - Aboveground Storage Tank
- 83 - SWMU No. 83 - Sump-Site No. 120
- 18 - SWMU No. 108 - Explosive Ordnance Disposal (EOD) Training Area
- 31 - SWMU No. 31 - AGE Maintenance Shop Pad
- 93 - SWMU No. 93 - Building 5123 Oil/Water Separator
- 27 - SWMU No. 127 - Building 4095 Sand Trap

- 55 - SWMU No. 55 - Lead-Acid Battery Area
- 77 - SWMU No. 77 - CE Storage Area
- 97 - SWMU No. 97 - Landfill No. 25
- 13 - SWMU No. 103 - Playa Lake

The third number corresponds to the type of QA/QC sample:

- 5 - Ambient Blank
- 6 - Field Duplicate
- 7 - Rinsate Blank
- 8 - Decon Water
- 9 - Trip Blank
- 0 - Missouri River Division Duplicate

The last number corresponds to the number of the particular QA/QC sample type. The only QA/QC sample types which are not identified as above is the matrix spike/matrix spike duplicate sample type. The samples which are chosen for MS/MSDs (MS/D for inorganics) analyses are labeled in the field as MS/MSD samples and are noted as such on the Chain-of-Custody forms. These samples are associated with a regular sample number as shown on Page 7 of this SOP. The following is an example of an identification number for a QA/QC Sample:

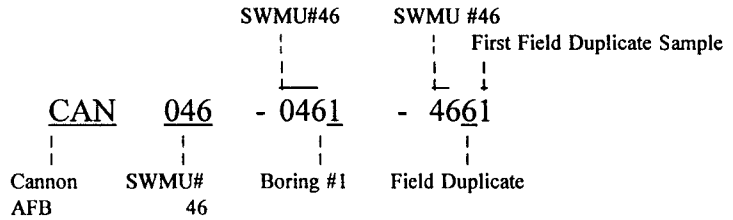

4.2 SAMPLE HANDLING

This section discusses proper sample containers, preservatives, and handling and shipping procedures. Tables 1 and 2 summarize the information contained in this section.

4.2.1 Sampling Containers

Certified, commercially clean sample containers shall be obtained from the contract analytical lab. If appropriate, the bottles shall be labeled by the lab to indicate the type of sample to be collected. Required preservatives (with the exception of sodium thiosulfate) shall be prepared and placed in the bottles for aqueous analyses at the laboratory prior to shipment to the site.

4.2.2 Sample Preservation

All samples will be stored on ice in an insulated cooler immediately following sample collection. Soil samples do not require additional preservation. As noted above, sample containers for aqueous samples will be sent by the laboratory containing the appropriate preservatives.

4.3 SAMPLE HANDLING AND SHIPPING

Sample containers will be placed in plastic storage bags (double bagged in zipper-lock bags) and wrapped in protective packing material (if appropriate). Samples will then be placed in a cooler with ice (double bagged using 1-gallon zipper-lock bags) for shipment to the laboratory. Samples collected in glass containers will be placed on the bottom of the cooler, and the ice will be placed on top of the jars. The drain on the cooler shall be taped shut. The glass containers will be packed in foam liners and bubble packing or styrofoam peanuts to ensure that no breakage occurs during shipment. Samples will be shipped by overnight express carrier for delivery to the analytical laboratory and to the MRD laboratory. Custody seals on the cooler will be covered with clear plastic tape.

A completed chain-of-custody form for each cooler will be placed in a zipper-lock bag and taped to the inside of the cooler lid. Coolers will be wrapped with strapping tape at two locations to secure lids. Numbered and signed custody seals shall be placed on the outside of each cooler. In addition, "Fragile" labels and "This Side Up" labels shall be placed on the outside of each cooler containing glass bottles. Put "This Side Up" labels on all four sides and "Fragile" labels on at least two sides. Note that each cooler cannot exceed the weight limit set by the shipper.

4.3.1 Holding Times and Analyses

The holding time is specified as the maximum allowable time between sample collection and analysis and/or extraction, based on the analyte of interest, stability factors, and preservation methods. Samples should be sent by overnight courier service to the laboratory daily after collection.

Chemical constituents which will be analyzed during the field investigation have been identified by SWMU in the FSP.

4.4 SAMPLE DOCUMENTATION AND TRACKING

This section describes documentation required in the field notes, Daily Quality Control Reports, and sample Chain-of-Custody requirements.

4.4.1 Field Notes

Documentation of observations and data acquired in the field will provide information on the acquisition of samples and also provide a permanent record of field activities. The observations and data will be recorded with waterproof ink in a permanently bound weatherproof field book with consecutively numbered pages and, if applicable, on field sampling data sheets.

The information in the field book will include the following as a minimum. Additional information is included in the specific SOPs regarding the appropriate data sheets.

- Project name
- Location of sample
- Sampler's signature
- Date and time of sample collection
- Sample identification numbers and sample depth (if applicable)
- Description of samples (matrix sampled), composite or grab sample
- Analysis to be performed
- Number and volume of samples

- Description of QA/QC samples (if collected)
- Sample methods or reference to the appropriate SOP
- Sample handling, including filtration and preservation, as appropriate for samples
- Field observations
- Results of any field measurements, such as depth to water, pH, temperature, conductivity and chlorine test results
- Personnel present

Changes or deletions in the field book should be lined out with a single strike mark, initialed and dated by person making change, and remain legible. Sufficient information should be recorded to allow the sampling event to be reconstructed without relying on the collector's memory.

Each page of the field book will be signed by the person making the entry. Anyone making entries in another person's field book will sign and date those entries.

4.4.2 A-E Daily Quality Control Report

To supplement the information recorded in the field book, A-E daily quality control reports (DQCRs) will also be maintained at every sampling location. An example of the DQCR is shown as Figure 2. DQCRs will be maintained by members of the field sampling team and cross-checked for completeness at the end of each day by the sampling team members and/or Field Manager. They will be signed and dated by individuals making entries and initialed by the reviewer upon completion. Copies of the DQCR will be forwarded to the Quality Assurance Officer for review and submitted to the USACE Project Manager within 5 days of completion of sampling. If there are any problems, the DQCR will be faxed to the USACE Project Manager on the following morning.

4.4.3 Sample Chain-Of-Custody

During field sampling activities, traceability of the sample must be maintained from the time the samples are collected until laboratory data are issued. Information on the custody,

transfer, handling, and shipping of samples will be recorded on a Chain-of-Custody (COC) form. An example COC form is shown as Figure 3.

The sample handler will be responsible for initiating and filling out the COC form. The COC will be signed by the sampler when the sampler relinquishes the samples to anyone else. It is not necessary for the shipping company to sign COC; however, the airbill shall be retained by the sample handler for tracking purposes. A COC form will be completed for each set of samples collected daily, and will contain the following information:

- Sampler's signature and affiliation
- Project number
- Date and time of collection
- Sample identification number
- Sample type/matrix
- Grab or composite sample
- Preservative used
- Analyses requested
- Number of containers
- Signature of persons relinquishing custody, dates, and times
- Signature of persons accepting custody, dates, and times (laboratory)
- Method of shipment (i.e. Federal Express)

The person responsible for delivery of the samples to the shipping company will sign the COC form, retain the last copy of the three-part COC form, document the method shipment, and send the original and the second copy of the COC form with the sample (taped in a ziploc bag to inner cooler lid). Upon receipt at the laboratory, the person receiving the samples will sign the COC form and return the second copy to the Project manager. Copies of the COC forms and all custody documentation will be received and kept in the central files. The original COC forms will remain with the samples until final disposition of the samples by the laboratory. The analytical laboratory will dispose of the samples in an appropriate manner 60 to 90 days after data reporting. After sample disposal, a copy of the original COC will be sent to the Project manager by the analytical laboratory to be incorporated into the central files. Sample tracking will be done by using W-C's Sample Information Management System (SIMSII) as described in the Data Management Plan.

Project _____ Report No. _____
Project No. _____ Date _____

FIGURE 2

Date

_____

W-C DAILY QUALITY CONTROL REPORT

Day	S	M	T	W	TH	F	S

Weather	Bright Sun	Clear	Overcast	Rain	Snow
Temp	To 32	32-50	50-70	70-85	85 up
Wind	Still	Moderate	High	Report No.	
Humidity	Dry	Moderate	Humid		

COE Project Manager _____
Project _____
Project No. _____
Contract No. _____

Subcontractors on Site:
Equipment on Site:
Visitors on Site:
W-C Personnel on Site:
Work Performed (including sampling):

DQCR.frm /dal

Sheet ___ of ___

Quality Control Activities (including field calibrations):
Health and Safety Levels and Activities:
Problems Encountered/Corrective Actions Taken:
Downtime/Standby:
Special Notes:

By _____ Title _____

1.0
TITLE PAGE

STANDARD OPERATING PROCEDURE NO. 13
WATER LEVEL MEASUREMENT

CANNON AIR FORCE BASE
REMEDIAL INVESTIGATION
CANNON AFB, NEW MEXICO

USACE CONTRACT NO. DACW-45-93-D-0005

W-C PROJECT NUMBER C3M11MM

TABLE OF CONTENTS

Section		Page
1.0	TITLE PAGE	-1-
2.0	PURPOSE AND SCOPE	-3-
3.0	WATER LEVEL MEASUREMENT PROCEDURE	-4-
3.1	EQUIPMENT LIST	-4-
3.2	MEASUREMENT PROCEDURE	-4-
3.3	DECONTAMINATION	-6-
3.4	DOCUMENTATION	-6-
4.0	CALIBRATION	-7-

LIST OF FIGURES

FIGURE 1 WATER LEVEL DATA SHEET

2.0
PURPOSE AND SCOPE

This document defines the standard procedure for measuring water levels in wells at Cannon Air Force Base (AFB). This Standard Operating Procedure (SOP) serves as a supplement to the Quality Assurance Project Plan (QAPP) and the Field Sampling Plan (FSP). The well locations and frequency of measurement are specified in the FSP. This procedure is intended to be used together with the FSP and other SOPs. Applicable SOPs are listed below:

- SOP No. 1 - Decontamination
- SOP No. 2 - Slug Testing
- SOP No. 3 - Monitoring Well Development
- SOP No. 4 - Groundwater Sampling
- SOP No. 15 - Investigation-Derived Wastes

3.0
WATER LEVEL MEASUREMENT PROCEDURE

3.1 EQUIPMENT LIST

The equipment necessary to measure water levels includes:

- Water level probe with 0.01-foot increments
- Oil-water interface probe
- Organic vapor analyzer
- Two 5-gal buckets (with lids) or equivalent for decontamination
- Decontamination brushes
- Liquinox soap
- Deionized or distilled water
- Potable water
- Spray bottle
- Field data sheets
- Field notebook
- Appropriate health and safety equipment

3.2 MEASUREMENT PROCEDURE

Appropriate health and safety equipment, as described in the Health and Safety Plan (HSP) should be worn during well opening, water level measurement, and decontamination. If liquid-phase petroleum products are anticipated in the monitoring well, an oil-water interface probe will be used instead of the electric water level indicator and the thickness of petroleum products will be recorded. The following procedures will be completed when measuring water levels:

- The water level probe shall be decontaminated prior to use in each monitoring well. Decontamination procedures are discussed in SOP No. 1.

- The well will be approached from upwind, the well cap unlocked and removed, and the air quality monitored in the casing and breathing zone with an OVA. Air quality measurements will be recorded in the field notebook.

- Observations regarding the condition of the well, including the well pad, and surface or protective casing, will be documented in the field notebook.

- The static water level and the total well depth will be measured using an electronic water level meter. The measuring point for all the wells shall be the top of PVC or steel monitoring well casing. For standardization of measurements, all well readings will be referenced to the north rim of the monitoring well riser pipe or to a marked reference point on the casing rim.

- The static water level and the total depth of the well shall be measured with the probe, recorded on the water level data sheet, and then immediately rechecked before the probe is removed from the well.

- All columns of field data sheets shall be completed, including time of measurement. An example water level data sheet is shown as Figure 1. If measurements are taken over a several-day period, the date of each measurement should be clearly indicated on the form. Section 3.4 describes the required documentation.

- Care shall be taken to verify the readings during each water level measurement period. Any significant changes in water level will be noted by comparing the most recent measurement with past measurements.

- After any measurement is taken, the water level probe shall be decontaminated as described in Section 3.3.

3.3 DECONTAMINATION

The water level indicator must be decontaminated before use, between wells, and at the conclusion of measurements. The probe will be decontaminated according to the procedure for decontamination of sampling equipment described in SOP No. 1.

Probe decontamination will be completed at the wells. Wash and rinse water will be collected and stored as defined in SOP No. 15.

3.4 DOCUMENTATION

The water level data sheet, shown as Figure 1, shall be completed during each measuring event. Field data sheets will include date, time, well number, total well depth, water level, static water elevation, and comments. A field notebook will also be kept during water level measurement activities describing decontamination procedures, calibration procedures, monitoring procedures, and other observations during water level measurement. Both the data sheets and notebook shall be filled out using legible handwriting, and shall be signed and dated by the person completing the page.

The measured depth to water, in feet below the measuring point, will be subtracted from the measuring point elevation to determine the elevation of the static water level. The resulting elevation shall be checked in the field to see that it is reasonable and that the subtraction was performed correctly. If there is a discrepancy, the water level shall be measured again.

4.0
CALIBRATION

The length of the water level measurement probe cord should be calibrated at least once per month or more often as needed to ensure the desired accuracy during water level measurement, slug testing, and groundwater sampling events. The calibration check consists of laying out 100 feet of steel tape next to 100 feet of the probe cord. Note any measurement discrepancies between the two at 1-foot intervals. The probe cord shall be rechecked if there is a possibility that it was stretched or damaged during water level measurements.

The procedures followed during calibration and verification of equipment shall be documented in the field notebook along with any calculations. If a correction is required, the probe will be tagged to indicate the correction.

WATER LEVEL DATA SHEET

Project Number: _____
Project Name: _____
Location: _____

Collected by: _____

Well Number	Date	Time	Method	MP Elev.	Well Depth	Depth to Water	Water Level Elevation	Comments

MP Elev. - Measuring Point Elevation

WOODWARD-CLYDE
Figure 1

1.0
TITLE PAGE

STANDARD OPERATING PROCEDURE NO. 14
HEADSPACE ANALYSIS

CANNON AIR FORCE BASE
REMEDIAL INVESTIGATION
CANNON AFB, NEW MEXICO

USACE CONTRACT NO. DACW-45-93-D-0005

W-C PROJECT NUMBER C3M11MM

TABLE OF CONTENTS

Section		Page
1.0	TITLE PAGE	-1-
2.0	PURPOSE AND SCOPE	-3-
3.0	RESPONSIBILITIES AND QUALIFICATIONS	-4-
4.0	HEADSPACE ANALYSIS	-5-
4.1	EQUIPMENT LIST	-5-
4.2	FIELD SCREENING PROCEDURES	-5-
4.3	ORGANIC VAPOR ANALYZER SELECTION	-6-
4.4	CALIBRATION	-6-
4.5	DOCUMENTATION	-6-

2.0
PURPOSE AND SCOPE

This document defines the standard procedures for performing headspace analysis of soil and water samples in the field at Cannon Air Force Base (AFB). This Standard Operating Procedure (SOP) serves as a supplement to the Quality Assurance Project Plan (QAPP) and the Field Sampling Plan (FSP), and gives the description of equipment and procedures for field screening of soil and water samples. Samples locations and frequency of collection are specified in FSP. This procedure is intended to be used together with the FSP and other SOPs.

Applicable SOPs are listed below:

- SOP No. 4 - Groundwater Sampling
- SOP No. 7 - Subsurface Drilling and Sampling
- SOP No. 12 - Sample Handling, Documentation, and Tracking

3.0
RESPONSIBILITIES AND QUALIFICATIONS

The Woodward-Clyde (W-C) Cannon AFB Project Manager is responsible for assuring that headspace analysis is conducted according to this procedure. The Project Manager will designate qualified project staff to complete this procedure.

The designated project staff are responsible for completing the headspace analysis process according to this procedure. They report their progress, and any problems, to the Task Leader or Project Manager. Staff members are responsible for understanding the activities assigned to them and the quality assurance requirements associated with the activities.

The W-C Project QA/QC Officer or designee will be responsible for periodically reviewing headspace analysis to assure that they are completed according to this procedure. Problems related to headspace analysis are also the responsibility of the W-C Task Leader.

All personnel assigned to complete this procedure shall be qualified to perform the portions of the procedure assigned to them. The Project Manager will make the appraisal of qualifications and will document the qualifications in the project Quality Assurance files. The Project Manager's appraisal of qualifications will include a comparison of the requirements of the job assignment with the relevant experience and training of the prospective assignee; it will also include a determination whether future training is required, and, if required, by what method. On-the-job training is an acceptable method, provided such training is received from a person qualified to perform the trainee's assignment and the results of that training are documented.

4.1 EQUIPMENT LIST

The following equipment is required for headspace analysis:

- Clean glass sample containers
- Paper towels
- Aluminum foil
- Organic vapor analyzer equipped with a photoionization detector (PID) or flame ionization detector (FID)
- Field book
- Waterproof and permanent marking pens
- Daily quality Control Report form (DQCR)

4.2 FIELD SCREENING PROCEDURES

A portion of each soil or water sample will be placed in the appropriate glass container. The container should be filled approximately three-fourths full for water and one-half full for soil. The mouth of the container will be covered with aluminum foil, tightly capped, and the samples will be allowed to equilibrate for 30 minutes. Care must be taken in the selection of soils with respect to consistency and sample placement in the container in order to achieve comparability and consistency. The disposition of the sample in the container will be recorded in the field logbook. All headspace material will be containerized as specified in SOP No. 15 after analysis.

The sample headspace in the container shall be analyzed with an organic vapor analyzer by removing the lid and inserting the instrument probe through the foil liner. Care must be taken in the selection of appropriate foil, placement of the foil on the container, and removal of the lid so as not to compromise the integrity of the seal. If the seal has been compromised, this will be recorded appropriately or a new sample taken if possible.

4.3 ORGANIC VAPOR ANALYZER SELECTION

The selection of the appropriate organic vapor analyzer equipped with either a PID or an FID shall be based on contaminants of concern and/or ambient conditions at the respective site. The lamp selected for the PID, where applicable, will be based on the relative ionization potentials of the expected volatile contaminants. The selected instrument and rationale for use will be recorded on the DQCR and in the field logbook.

4.4 CALIBRATION

The instrument(s) selected for use in accordance with data quality objectives and site requirements shall be calibrated according to the manufacturers recommendations and specifications. These procedures will be attached to this SOP where applicable.

4.5 DOCUMENTATION

All procedures and field conditions shall be recorded on the DQCR and in the field logbook. The record shall include a description of the material being screened as well as site conditions such as humidity and the equilibration time and temperature. The headspace screening results shall be recorded on the HTW boring log.

1.0
TITLE PAGE

STANDARD OPERATING PROCEDURE NO. 15
INVESTIGATION-DERIVED WASTES

CANNON AIR FORCE BASE
REMEDIAL INVESTIGATION
CANNON AFB, NEW MEXICO

USACE CONTRACT NO. DACW-45-93-D-0005

W-C PROJECT NUMBER C3M11MM

TABLE OF CONTENTS

Section		Page
1.0	TITLE PAGE	-1-
2.0	PURPOSE AND SCOPE	-3-
3.0	RESPONSIBILITIES AND QUALIFICATIONS	-4-
4.0	INVESTIGATION DERIVED WASTES	-5-
5.0	SOIL CUTTINGS	-6-
6.0	DECONTAMINATION WATER	-7-
7.0	USED PERSONNEL PROTECTIVE EQUIPMENT	-8-
8.0	WELL DEVELOPMENT/PURGE WATER	-9-

2.0
PURPOSE AND SCOPE

This document defines the standard procedures for handling and final disposition of Investigation-Derived Wastes (IDW) at Cannon Air Force Base (AFB). This Standard Operating Procedure (SOP) serves as a supplement to the Quality Assurance Project Plan (QAPP) and the Field Sampling Plan (FSP).

Applicable SOPs are listed below:

- SOP No. 1 - Decontamination
- SOP No. 2 - Slug Testing
- SOP No. 3 - Monitoring Well Development
- SOP No. 4 - Groundwater Sampling
- SOP No. 7 - Subsurface Drilling and Sampling
- SOP No. 13 - Water Level Measurement
- SOP No. 14 - Headspace Analysis

3.0
RESPONSIBILITIES AND QUALIFICATIONS

The Woodward-Clyde (W-C) Cannon AFB Project Manager is responsible for assuring that management of investigation-derived waste (IDW) is conducted according to this procedure. The Project Manager will designate qualified project staff to complete this procedure.

The designated project staff are responsible for handling IDW according to this procedure. They report their progress, and any problems, to the Task Leader or Project Manager. Staff members are responsible for understanding the activities assigned to them and the quality assurance requirements associated with the activities.

The W-C Project QA/QC Officer or designee will be responsible for periodically reviewing IDW activities to assure that they are completed according to this procedure. Problems related to equipment decontamination are also the responsibility of the W-C Task Leader.

All personnel assigned to complete this procedure shall be qualified to perform the portions of the procedure assigned to them. The Project Manager will make the appraisal of qualifications and will document the qualifications in the project Quality Assurance files. The Project Manager's appraisal of qualifications will include a comparison of the requirements of the job assignment with the relevant experience and training of the prospective assignee; it will also include a determination whether future training is required, and, if required, by what method. On-the-job training is an acceptable method, provided such training is received from a person qualified to perform the trainee's assignment and the results of that training are documented.

4.0
INVESTIGATION DERIVED WASTES

The fieldwork planned at Cannon AFB during the RCRA Facility Investigation (RFI) will produce investigation-derived wastes (IDW). These will consist of the soil from the drilling of soil borings and headspace analysis, the well development/purge water from the monitoring well, and the potable water used to decontaminate the drilling and sampling equipment and personnel, and the used Personnel Protective Equipment (PPE).

5.0
SOIL CUTTINGS

The soil cuttings generated by the drilling and sampling of all soil borings and monitoring wells will be placed into DOT rated 55-gallon drums. Mixing of the cuttings from several borings is permissible in order to fill the drums as full as possible. However, only cuttings from individual SWMUs can be mixed, and the splitting of cuttings from one boring into several drums should be avoided. The drums will be sealed and labeled with permanent markings indicating the SWMU number, the boring(s) number, the matrix, date, drum ID number, geologist's initials, and the base contact, including phone number. If cuttings from an individual boring must be split, the depths of the cuttings will also be included on the drums. The drums will then be moved to a temporary storage facility designated by Cannon AFB and placed on wooden pallets. Drums from individual SWMUs will be segregated from each other as much as possible. Composite samples from the drums will be collected and analyzed and will be used in conjunction with specific sample data to profile the IDW. IDW will be categorized as either nonhazardous and disposed of on site, nonhazardous and disposed of off site, or hazardous. It has been assumed that all IDW will fall in the first two categories. W-C will complete and submit all appropriate paperwork and will arrange for the disposal of all nonhazardous IDW. If the soil is hazardous, the appropriate method of disposal will be discussed and agreed upon by Cannon AFB, USACE, and W-C personnel.

6.0
DECONTAMINATION WATER

During the field activities, equipment used for the various sampling methods will be decontaminated before and after use according to the procedures in SOP No. 1. This water will be containerized and placed into a DOT-rated drum and transported to the temporary storage facility.

It is anticipated that this decontamination water will not have any significant levels of contaminants since it is originally potable water. A headspace analysis will be performed to determine if any significant volatile organic compounds (VOCs) are present. Noncontaminated water will either be discharged onto the ground or into a wastewater lagoon on Cannon AFB as directed by Cannon AFB and USACE personnel. If the decontamination water is not acceptable, it will be characterized further to determine if it is necessary to ship to a licensed hazardous waste facility.

7.0
USED PERSONNEL PROTECTIVE EQUIPMENT

Any personnel protective equipment (i.e., gloves, duct tape, Tyvek, etc.) used during field activities will be placed into 55-gallon drums, sealed, and labeled with the appropriate information. **No mixing of wastes will be allowed (i.e., soil with PPE trash).** PPE from individual SWMUs does not need to be segregated. If the drum is not full after the work has been completed at one SWMU, PPE from the next SWMU may be placed into it.

8.0
WELL DEVELOPMENT/PURGE WATER

Waste water generated by the well development/purging operations will be placed in DOT-rated 55-gallon drums. The drums will be sealed and labeled with permanent markings indicating the SWMU No., the monitoring well designation, the matrix, date, drum ID number, geologist's initials, and the base contact, including phone number. The drums will be moved to a temporary storage facility designated by Cannon AFB. Composite samples from the drums will be collected and analyzed and will be used in conjunction with specific sampling data to determine whether or not the water is contaminated. Noncontaminated water will either be discharged onto the ground or into a wastewater lagoon on Cannon AFB as directed by Cannon AFB and USACE personnel. If the water is contaminated, the appropriate method of disposal will be discussed and agreed upon by Cannon AFB, USACE, and W-C personnel.

1.0
TITLE PAGE

STANDARD OPERATING PROCEDURE NO. 16
DETECTION OF PETROLEUM HYDROCARBONS USING IMMUNOASSAY

CANNON AIR FORCE BASE
REMEDIAL INVESTIGATION
CANNON AFB, NEW MEXICO

USACE CONTRACT NO. DACW-45-93-D-0005

W-C PROJECT NUMBER C3M11MM

TABLE OF CONTENTS

Section		Page
1.0	TITLE PAGE	-1-
2.0	INTRODUCTION	-3-
3.0	RESPONSIBILITIES AND QUALIFICATIONS	-4-
4.0	PROCEDURE	-5-
4.1	EQUIPMENT LIST	-5-
4.2	IMMUNOASSAY TEST PROCEDURES	-5-
4.3	QUALITY ASSURANCE/QUALITY CONTROL(QA/QC)	-11-

2.0
INTRODUCTION

The purpose of this document is to define the standard procedure for detection of petroleum hydrocarbons using immunoassay for the Cannon Air Force Base project. This Standard Operating Procedure (SOP) serves as a supplement to the Quality Assurance Project Plan (QAPP) and the Field Sampling Plan (FSP). This procedure is intended to be used with the SAP and the other SOPs.

Total petroleum hydrocarbons will be analyzed for by SW-846 Immunoassay Method 4030. Method 4030 is a procedure for screening soils to determine whether they contain petroleum products. This method will be used to semi-quantitatively evaluate the presence of gasoline, jet-A fuel, JP-4, diesel fuel No. 2, kerosene, fuel oil #2, fuel oil #6, and mineral spirits. The method is useful in situations where other analytical methods (lab testing, etc.) are not practical or effective and timely information is required. At CAFB, the method will be used as a semi-quantitative screening method for the detection of residual petroleum components in soil samples.

The overall objective of the sampling program is to obtain samples which accurately depict the chemical, physical, and/or biological conditions at the sampling site. Extraneous contaminant materials can be brought to a sampling location and/or introduced into the medium of interest during the sampling program (e.g., by bailing or pumping of groundwater with equipment previously contaminated at another sampling site). Trace quantities of these materials can contaminate the sample and lead to false positive analytical results and, ultimately, to an incorrect assessment of the conditions associated with the site. Decontamination of sampling equipment (e.g., bailers, pumps, tubing, soil, and sediment sampling equipment) and field support equipment (e.g., drill rigs, vehicles) is required at Cannon Air Force Base to ensure that sampling cross-contamination is prevented, and that on-site contaminants are not carried off site.

3.0
RESPONSIBILITIES AND QUALIFICATIONS

The Woodward-Clyde (W-C) Cannon AFB Project Manager is responsible for assuring that immunoassay testing is conducted according to this procedure. The Project Manager will designate qualified project staff to complete this procedure.

The designated project staff are responsible for completing the equipment decontamination process according to this procedure. They report their progress, and any problems, to the Task Leader or Project Manager. Staff members are responsible for understanding the activities assigned to them and the quality assurance requirements associated with the activities.

The W-C Project QA/QC Officer or designee will be responsible for periodically reviewing immunoassay testing activities to assure that they are completed according to this procedure. Problems related to immunoassay testing are also the responsibility of the W-C Task Leader.

All personnel assigned to complete this procedure shall be qualified to perform the portions of the procedure assigned to them. The Project Manager will make the appraisal of qualifications and will document the qualifications in the project Quality Assurance files. The Project Manager's appraisal of qualifications will include a comparison of the requirements of the job assignment with the relevant experience and training of the prospective assignee; it will also include a determination whether future training is required, and, if required, by what method. On-the-job training is an acceptable method, provided such training is received from a person qualified to perform the trainee's assignment and the results of that training are documented.

4.0
PROCEDURE

4.1 EQUIPMENT LIST

The following is an equipment list for conducting immunoassay detection tests.

- Spectrophotometer
- Ensys Petro risct test kit
- Permanent marking pen
- Paper towels
- Liquid waste container
- Disposable gloves

4.2 IMMUNOASSAY TEST PROCEDURES

The procedures which will be used to detect petroleum hydrocarbons in the rock core using immunoassay are as follows. These instructions were taken from and are also contained in Ensys's User's Guide which is provided with the test kit. Reference that document for further definition and illustrations:

READ ALL INSTRUCTIONS BEFORE PROCEEDING WITH THE TEST

1) Collect a split spoon sample of the soil material from the specified interval in the boring.

2) Observe the soil material as described in Section 4.2.

3) Set up work station in accordance with the diagram found on the Ensys instruction sheet.

PHASE ONE

Weigh Sample

4) Open methanol crimp top vial and pour the entire contents into the extraction jar.

5) Press ON/MEMORY button on pan balance. Balance will beep and display 0.0.

6) Crush a portion of the sample with a hammer or crucible to obtain a 10 g sample. Weigh out 10.0 g (± 0.1 g) of pulverized sample. The rest of the samples may be chosen for the 10 percent confirmation analysis. Send 10 percent of the samples to be analyzed by 418.1 according to procedures described in the FSP.

7) If balance turns off prior to completing weighing, use empty weight boat to retare, then continue.

Extract Petroleum Hydrocarbons

8) Using wooden spatula, transfer 10 grams of soil (or a quantity of soil appropriate for the detection level required) from weight boat into extraction jar.

9) Recap extraction jar tightly and shake vigorously for one minute.

10) Allow to settle for one minute.

11) Repeat steps 4 - 10 for each sample to be tested.

Filter Sample

12) Disassemble filtration plunger from filtration barrel.

13) Insert bulb pipette into top (liquid) layer in extraction jar and draw up sample. Transfer at least ½ bulb capacity into filtration barrel. Do not use more than one full bulb.

14) Press plunger firmly into barrel until adequate filtered sample is available (Place on table and press if necessary).

15) Repeat steps 12 - 14 for each sample to be tested.

PHASE TWO

16) Label the conjugate and antibody coated tubes with a permanent marking pen.

17) Open dilution sample by slipping ampule cracker over top, and then breaking top at scored neck.

18) Uncap enough blue buffer, conjugate and antibody coated tubes for samples and standards.

19) Empty a blue buffer tube into each conjugate tube.

20) Assemble new tip onto mechanical pipette.

21) Withdraw 60 uL of sample from filter unit using mechanical pipette and dispense below the liquid level in 15 ppm conjugate tube. Wipe mechanical pipette tip.

22) Withdraw 60 uL of filtered sample from the filter unit and dispense below the liquid level in the 1000 ppm dilution ampule. Shake (thoroughly mix the contents with special care not to spill or splash) ampule for 5 seconds.

23) Withdraw 60 uL of diluted sample from 1000 ppm dilution ampule and dispense below the liquid level in 1000 ppm dilution ampule.

24) Withdrawl 60 uL from 1000 ppm dilution ampule and dispense below the liquid level in 1000 ppm conjugate tube. Discard mechanical pipette tip.

Buffer Standards

25) Assemble new tip onto mechanical pipette.

26) Open PETRO standard ampule.

27) Withdraw 60 uL of PETRO standard and dispense below the liquid level in standard conjugate tube. Wipe mechanical pipette.

28) Repeat step 27 for the second standard.

29) Shake all conjugate tubes for 5 seconds.

PHASE THREE

This phase requires critical timing and care in handling the antibody coated tubes.

30) Set timer for exactly 10 minutes.

31) Start timing and immediately pour solution from each conjugate tube into appropriate antibody coated tube.

32) Shake carefully, taking care not to splash or spill, all tubes for 5 seconds.

33) Let tubes stand for exactly 10 minutes.

34) After the 10-minute incubation, empty antibody coated tubes into liquid waste container.

35) Wash antibody coated tubes vigorously and with force. Place nozzle just above antibody coated tube, squeeze bottle to fill each tube with a vigorous stream, and empty into liquid waste container. (The wash solution is a harmless, dilute solution of detergent. Do not hesitate to wash vigorously even if the solution contacts gloved hands.) Wash by filling and emptying a total of 4 times.

36) Tap antibody coated tubes upside down on paper towels to remove excess liquid. Residual foam in the tubes will not interfere with test results.

Color Development

37) Add 5 drops of Substrate A (yellow cap) to each antibody coated tube.

38) Set timer for exactly 2 minutes.

39) Start timer and immediately add 5 drops of Substrate B (green cap) to each antibody coated tube.

40) Shake all tubes for 5 seconds. Solution will turn blue in some or all antibody coated tubes.

41) Stop reaction at end of 2 minutes by adding 5 drops of Stop Solution (red cap). Blue solution will turn yellow when Stop Solution is added.

PHASE FOUR

Select Darker Standard

42) Wipe outside of antibody coated tubes.

43) Place both standard tubes in the photometer.

44) Switch tubes until the photometer reading is negative or zero. Record reading. If reading is greater than 0.2 in magnitude (+ or -), results are outside of QC limits. Retest the sample(s).

45) Remove and discard tube in right well. The tube in the left well is the darker standard.

Interpret Results

46) Place 15 ppm tube in right well of photometer and record reading.

47) If photometer reading is negative or zero, petroleum hydrocarbons are present. If photometer reading is positive, concentration of petroleum hydrocarbons is less than 15 ppm.

48) Place 1000 ppm tube in right well of photometer and record reading shown on display.

49) If photometer reading is negative or zero, petroleum hydrocarbons are present. If photometer reading is positive, concentration of gasoline or petroleum fuel is less that 1000 ppm.

4.3 QUALITY ASSURANCE/QUALITY CONTROL(QA/QC)

In addition to following procedures recommended by the manufacturer, the level of QA/QC proposed for the immunoassay-based field testing is consistent with the QA2 level of QA/QC defined for the Superfund program by Ryti and Neptune (1991) and consists of the following elements:

A. **Sample Documentation** - Each sample must be documented with the location, depth, time, and date of collection.

B. **Field Analysis Documentation** - Record raw data, including any calculations and final results of field analysis for all samples screened (including all QC samples).

C. **Method Calibration** - Standards will be obtained from the manufacturer and analyzed in duplicate. The difference in optical density (OD, photometer display) of the duplicate standards will be recorded. A valid test is indicated when the magnitude of the displayed numbers absolute value is 0.20 or less. Test runs resulting in a greater number will be repeated to ensure valid conclusions. Standards will be analyzed at the beginning and end of each day and at a rate of 1 in 20 during the testing period. Each analysis must include two standards, with no more than a total of 12 antibody-coated tubes.

D. **Method Blank** - The method blank will consist of the extraction solvent supplied by the manufacturer. This blank will be analyzed at a rate of at least 1 in 10 to evaluate cross-contamination and document baseline conditions.

E. **Confirmation of Field Analysis** - To confirm the quantitation of the analyte, at least 10 percent of the samples will be sent off site and analyzed by EPA Method 418.1.

F. **Site-Specific Matrix Background Field Analysis** - A sample of uncontaminated material from the same matrix will be analyzed to evaluate potential matrix effects.