CAFB96

DEPARTMENT OF THE AIR FORCE

HEADQUARTERS 27th FIGHTER WING (ACC)
CANNON AIR FORCE BASE, NEW MEXICO

16 SEP 1996

W. P. Ard, Colonel, USAF
Commander, 27th Support Group
100 S DL Ingram Blvd Ste 200
Cannon AFB NM 88103-5217

ENTERED

RECEIVED
SEP 26 1996

Ms. Barbara Hoditschek
Hazardous and Radioactive Material Bureau
New Mexico Environment Department
PO Box 26110
1190 St Francis Drive
Santa FE NM 87502

FILE: HSWA/CAFB/SEWAGE LAGOONS and APPENDIX H of III (COVER LETTER ONLY)
TRACK: CAFB/9-16-96/9-26-96/ARD/HODITSCHEK

Dear Ms. Hoditschek

In the near future, construction of Cannon Air Force Base's (CAFB's) new wastewater treatment plant will begin. This sequencing batch reactor treatment plant will replace the existing facultative lagoons. This plant is expected to be operational in Sep 97. CAFB intends to deactivate the lagoons at that point.

Attached are the final wastewater treatment plant plans and specifications. Note that these plans and specifications are not construction documents. Any differences between the final design/specifications are insignificant. Also attached are Sections 1 and 2 of the final Design Analysis document prepared for this project. Section 1 provides an excellent discussion of the various components of the wastewater treatment plant. This information will provide a quick reference of the plant's major components. Section 2 includes brief narratives of several features included with this treatment facility, such as wastewater influent components, site drainage, etc. Section 2 is a voluminous document consisting primarily of computations supporting the project's design; therefore, only an excerpt of Section 2 is provided.

I would like to bring to your attention a unique feature incorporated into the design of this treatment facility. This feature, an emergency flood control system, takes advantage of the two facultative lagoons' deactivation. The existing north lagoon will serve as this flood control system during periods when the north Playa Lake cannot accept treated effluent (due to concerns of flooding this lake) or when a golf course pond is unable to accept treated effluent (this pond will be an additional discharge point, aside from the north Playa Lake). Section 2 of the Design Analysis document addresses this feature in greater detail.

As you are aware, the facultative lagoons and Playa Lake are solid waste management units (SWMUs) under our Part B permit. The lagoons (SWMU No. 101) will not be disturbed under the project; however, as mentioned, the north lagoon will receive water from the Playa Lake (SWMU No. 103) during periods the lake and golf course pond cannot accept treated effluent.

Domestic sludge will be disposed of after the new plant becomes operational. As CAFB has not required sludge disposal in the past, a Sludge Management Study will be undertaken. The purpose of this study, which will be developed by an outside agency, is twofold: (1) identify the removal, handling, and disposal procedures of sludge within the existing facultative lagoons and (2) identify the optimal disposal method(s) for sludge generated from day-to-day operations of the new treatment plant. Obviously, since the lagoons are a SWMU, CAFB is concerned with the Resource Conservation and Recovery Act (RCRA) Corrective Action implications of sludge removal within the lagoons. Eventual clean closure of these lagoons and the termination of annual ground water monitoring are the intended goals of sludge removal.

Achieving sludge removal within the RCRA Corrective Action process framework will require a close partnership between the New Mexico Environment Department (NMED), CAFB, and the agency developing the study. Our collective efforts in this endeavor will ensure sludge handling and disposal practices proceed in a safe and environmentally responsible manner.

My staff will contact you with additional details on the support needed from the NMED. In the meantime, I ask that you contact other individuals within your agency that may provide valuable insight into sludge disposal concerns. If you have any questions regarding the wastewater treatment plant project or the Sludge Management Study, please contact Mr. John Rebman, Environmental Flight, at (505) 784-2739. Questions regarding the RCRA Corrective Action implications of sludge removal should be addressed to Mr. John Constantine, Environmental Flight, at extension 6378.

Sincerely

W. P. ARD, Colonel, USAF
Commander, 27th Support Group

Attachment:
Design Documents

cc:
NMED, Surface Water Quality Bureau w/o Atch (J. Piatt)
NMED, Ground Water Protection and Remediation Bureau w/o Atch (M. Leavitt)
USEPA, Region VI, Multimedia Planning and Permitting Division w/o Atch (D. Neleigh)
HQ ACC/CEVC w/o Atch (R. Shannon)
ACC CES/ESV w/o Atch (M. Calvert)

Section 1

Introduction

1.1 General

This document has been developed at the direction of the U.S. Army Corps of Engineers, Southwestern Division (SWD), for new wastewater treatment facilities to serve Cannon Air Force Base (CAFB). A Project Definition (PD) was completed October 19, 1994, that identified a solution for wastewater treatment at CAFB.

The selected treatment system includes preliminary treatment, biological treatment, disinfection, and disposal in an existing playa lake. Sludge handling processes include aerobic digestion, dewatering on drying beds, and disposal by land application.

1.2 A-E Contract Data

The A-E Service Contract Number for this project is DACA47-95-C-0001. The Notice to Proceed was February 10, 1995.

1.3 Applicable Criteria

This Design Analysis is based on the requirement to provide new wastewater treatment facilities and abandonment of existing systems. The criteria to use for design flows and influent wastewater quality shall be that developed in the October 19, 1994, study.

The project design will be a new design.

1.4 Purpose and Function

The existing wastewater treatment plant at CAFB is not suitable for continued use because it does not have sufficient capacity to treat future flows and loads to meet anticipated effluent limits. The new facilities will provide this capability.

1.5 Design Scope

Construction of a new 0.75 mgd wastewater treatment plant (WWTP) at Cannon Air Force Base, New Mexico. Treatment processes for the new WWTP will include preliminary treatment for coarse screening removal; biological treatment for biochemical oxygen demand (BOD) and total suspended solids (TSS) removal; and disinfection. Treated effluent will be discharged into a local playa lake.

1.6 Site Visits and Conference Notes

Meeting notes of the following are included in Appendix D:

- Review Draft Report on Phase 3 - September 15, 1994.
- Predesign meeting - March 21, 1995.
- Preliminary Design Review Meeting - August 30, 1995.
- Advanced Final Design Review Meeting - April 2 and 3, 1996.

1.7 Government-Furnished Equipment

None

1.8 Construction

1.8.1 Instructions: There are no unusual aspects or special features for this project. The new wastewater treatment facility can be constructed without interruption of existing wastewater treatment operations.

1.8.2 Phasing: See Appendix C.

1.8.3 Duration: Unknown

1.9 Air and Water Pollution Control

Not required.

1.10 Design Problems

No special problems encountered.

1.11 Waivers

None.

1.12 Security Provisions

All buildings will be locked and keyed alike.

1.13 Economic Summary

1.13.1 A construction cost estimate is presented in a separate document.

1.14 User Information

1.14.1 Entrance Works: Raw wastewater enters the plant site and discharges into the existing bar screen/comminutor structure. This structure has a comminutor as the main device for reducing the size of solids by cutting and returning the solids to the wastewater. A manually-cleaned bar screen is provided as an emergency bypass when the comminutor is out-of-service.

The existing comminutor will be removed and replaced by a mechanically-cleaned bar screen. Screenings will be deposited in a receptacle at ground level.

Screened wastewater (plant influent) then flows through an existing Parshall flume and discharged into the Influent Pump Station wet well.

1.14.2 Influent Pump Station: The influent pump station is an existing facility that will continue to operate as it currently does. The station contains four submersible sewage pumps that will pump the influent wastewater to the SBR basins.

1.14.3 Sequencing Batch Reactor: Two sequencing batch reactor basins are provided for treating the wastewater. Each SBR is equipped with coarse bubble diffusers that can be removed from the basin without dewatering the tank. Air supply for the SBR's is provided by two of three positive displacement blowers located in the blower building. The third blower serves as backup for the other two. Each SBR is equipped with a floating down-draft mixer for complete mixing of the basin contents. In addition to serving as the reactor tank for BOD_5 and nutrient removal, the SBR basins function as clarifiers. Clarified water is removed from the basins through one floating decanter per basin. The decanter features a 7 foot diameter circular weir that allows water to exit the basin from just below the water surface, thus preventing floatables from entering the wastewater effluent. Each SBR is equipped with a submersible sewage pump for transferring sludge to the aerobic digester.

The two SBR tanks are designed to operate on a 5 cycle per day basis. Each cycle has a duration of 288 minutes. During the first 144 minutes of the cycle, wastewater is being pumped into the basin. During the last 144 minutes of the cycle, treatment operations are occurring while the wastewater is being pumped to the other SBR tank.

The cycle consists of the following phases: (1) static fill, (2) mixed fill, (3) react fill, (4) react, (5) settle, (6) decant, (7) sludge waste, and (8) idle time. During the static fill phase, the mixer and the aeration system is off. During the mixed fill phase, the mixer is operating but the aeration system is off. During the react fill and react phases, the mixer and the aeration system are on. However, the aeration system can be turned on and off during these phases to achieve the desired level of denitrification. During the settle phase, the mixer and the aeration system are off allowing the solids to settle as would occur in a clarifier. During the decant phase, the clarified liquid is removed from the SBR and flows

to the chlorine contact chamber by gravity. The necessary amount of solids to be wasted are pumped from the SBR to the aerobic digester during the sludge wasting phase. The idle phase completes the cycle time until the SBR is ready to accept wastewater during the next cycle time.

1.14.4 Chlorine Contact Basin: The chlorine contact basin is used to provide contact time in the chlorination and dechlorination of the plant's treated wastewater as well as to provide chlorinated water to the plant's washwater system.

Effluent flow from the SBR is chlorinated by pipeline injection and is completely mixed by a mechanical mixer in the influent chamber of the chlorine contact basin. The contact basin is of serpentine design and allows for a 40 minute contact time for a 1.5 mg/l chlorine residual. Sump drain trenches are provided at the bottom of the basin and drain to the plant drain system, which can be used for periodic cleaning of the tank bottom.

Chlorinated effluent from the basin is recycled to the plant washwater system located in the Blower Building. Chlorinated effluent is also drawn off to an adjacent effluent storage tank to detain flow before it reenters the chlorine contact basin and is discharged to the Playa Lake.

The chlorinated wastewater is dechlorinated with sodium bisulfite. The solution is diffused into the chlorinated wastewater stream in the basin's effluent chamber where it is rapidly mixed by mechanical mixer before discharged to the existing Playa Lake. Effluent to the Playa Lake is measured through a Parshall flume located in the discharge chamber of the chlorine contact basin.

A slotted pipe skimmer will be installed at the downstream end of the chlorine contact chamber. The skimmer can be used periodically to remove floatables that may enter the chlorine contact chamber. Skimmings removed with the slotted pipe skimmer are directed to the plant drain system and are prevented from exiting the treatment plant in the effluent.

1.14.5 Chlorination/Dechlorination Building: This building serves to facilitate the plant's wastewater disinfection and dechlorination processes and associated operational activities as listed below:

- Receive and store sodium hypochlorite solution for disinfection of wastewater
- Manage the operation of the sodium hypochlorite feed system
- Receive and store sodium bisulfite for dechlorination of disinfected plant effluent.
- Manage the operation of the sodium bisulfite feed system

<u>Chlorination</u>. Sodium hypochlorite (NaOCL) is the chlorine compound disinfecting agent used at the plant. The NaOCL solution will be delivered for storage in the 6500 gallon storage tank located in the Chlorination/Dechlorination Building. The tank is the source of hypochlorite supply to the hypochlorite feed pumps located on a platform adjacent to the tank. Three (3) diaphragm metering pumps provide sodium hypochlorite for disinfection. One pump feeds solution to the plant influent line which will control filamentous bacteria and odors at the

head of the plant if necessary. The other two pumps feed the hypochlorite solution to a point where it is injected directly into the SBR effluent pipeline to disinfect the wastewater entering the chlorine contact basin. The solution will then be rapid mixed for thorough dispersion by a mechanical mixer located in the influent chamber of the chlorine contact basin.

Dechlorination. Sodium bisulfite ($NaHSO_3$) will provide dechlorination of the plant's effluent wastewater. The $NaHSO_3$ solution will be delivered in 55 gallon drums which will be stored in the building adjacent to the dechlorination feed pumps. The three feed pumps will be diaphragm metering pumps. One pump is dedicated for dechlorination of effluent discharge to the Playa Lake and one pump is dedicated for dechlorination of effluent pumped to the Golf Course. The third pump will serve as backup when one of the dedicated pumps is out of service.

The sodium bisulfite solution will be injected into the effluent to the Playa Lake by a diffuser located in the effluent chamber of the chlorine contact basin. The solution will be rapid mixed for thorough dispersion by a mechanical mixer mounted at the top of the chamber wall. Sodium bisulfite can also be injected into the Golf Course forcemain from the effluent irrigation pumps.

The Chlorination/Dechlorination Building has a recessed floor for accidental spill containment. The recessed floor is separated by a wall to contain the two different chemicals separately. Sump pits, 2-feet deep, will further contain the spill in each compartment.

1.14.6 Aerobic Digester: One aerobic digester is provided which could be converted to an SBR in the future if necessary. The digester is equipped with a coarse bubble aeration system which can be removed from the basin without dewatering the tank. Air supply is provided from the positive displacement blowers located in the blower building. A standby blower is provided for the aerobic digester.

A floating down-draft mixer provides mixing in the basin and the floating mixer can be accessed from the top of the basin for routine maintenance or repair. Supernatant from the digester is removed from the basin through a floating decanter. The supernatant is returned by gravity to the treatment plant influent through the plant drain system.

Digested sludge is withdrawn from the bottom of the digester. Sludge is transferred by gravity under normal operation to the sludge drying beds. A submersible sewage pump is installed in the digester for use in removing digested sludge if necessary.

1.14.7 Sludge Drying Beds: Ten individual sludge drying beds are provided. Each bed is equipped with an inlet valved piping header. The beds are asphalt paved and are sloped to a center drain trench. The drain trench is a concrete trench which is filled with gravel. The top of the trench is covered with heavy duty grating sections and the grating is filled with sand. The sand and gravel layers are separated with a filter fabric liner. The drain trench slopes to one end and a pipe penetrates the wall of the trench to allow drained water to enter into the plant drain system. Each drying bed is also equipped with a down-opening weir gate

to allow for the immediate removal of clarified water from the beds after the liquid and solids have separated. This will enhance the sludge drying capability of the beds. Each bed is sized to fill with a specific volume of digested sludge from the aerobic digester. Although ten beds are provided, one of the drying beds could be reserved for stockpiling of dried sludge. Dried sludge from the beds will be removed with a small front end loader. After the sludge has been properly dried, the sludge is moved to the sludge composting area.

1.14.8 Sludge Composting Area: A sludge composting area is provided adjacent to and immediately south of the sludge drying beds. The composting area consists of two paved areas with a center access drive area. The composting areas are paved and slope to drains located in the center of the composting areas. The drains are connected to the plant drain system. The composting area is surrounded by a 2 foot high concrete wall to contain compost within the area. The concrete wall to the north of the composting area is common with the south wall of the sludge drying beds. This wall is 5 feet high and will serve as a "push wall" to aide in material handling operations.

1.14.9 Blower Building: The blower building houses five positive displacement (PD) blowers, the plant's washwater system, and electrical controls.

Blower Room. The five PD blowers are totally enclosed for noise reduction and serve the plant aeration system needs. Process air from two of the three 75 HP blowers is supplied to the SBR. Any one of the three blowers serves as backup if any one of the other blowers is out of service. Process air from one of the two 25 HP blowers is supplied to the aerobic digester. One blower serves as backup if the other blower is out of service. Blower use will be manually alternated to provide equal wear. The blower enclosure access panels are removable to allow for blower service and maintenance. Removal of a blower or motor is facilitated by an overhead hoist. The east wall of the building contains an overhead coiling door, 8-feet wide, for removal of large equipment.

Pump Room. The washwater pumps and piping are contained in a separate room in the blower building. Washwater, nonpotable effluent from the chlorine contact basin, is used for the washwater supply system. The washwater pumps provide high pressure water to the yard hydrant water system. A hydropneumatic tank with a pressure flow switch is used to maintain high water pressure and to control pump start/stop operations. Each pump serves as backup when one pump is out of service. Pump isolation valves are provided to facilitate maintenance and operations. A dual basket strainer is provided on the washwater pump discharge pipeline. The strainer filters debris from the washwater supply to the plant yard hydrant system.

Electrical Room. Equipment controls are contained in a separate electrical room in the blower building. Both the electrical room and the washwater equipment room have walls and ceilings of sound insulated materials for noise reduction from the operating PD blowers.

1.14.10 Wastewater Process Yard Piping: Process piping is sized to accommodate peak design flows that are anticipated to occur with the sequencing batch reactor process.

1.14.11 Plant Drain System: All treatment structures and buildings are connected to the plant drain system. Manholes are provided at key locations for sewer line maintenance when a major treatment structure is drained.

1.14.12 Potable Water System: The potable water system is provided for the Control Building, for fire sprinklers in the Chlorination/Dechlorination Building, for hose bibbs in the buildings, and for fire hydrants. The potable water system will be connected to Cannon's existing water distribution system.

1.14.13 Washwater System: Plant effluent is recycled from the chlorine contact tank to the washwater supply system located in the blower building. Two washwater pumps, one serving as standby, supply high pressure non-potable effluent water to the site's yard hydrants which will facilitate plant maintenance and housekeeping tasks.

1.14.14 Electrical: Power distribution for the wastewater treatment facility is through a 750 kVA distribution transformer. This transformer transforms the incoming 4160V voltage to 480 volts for use throughout the plant. Adjacent to the transformer are the metering compartment and the 480 volt distribution switchboard. The switchboard provides power circuit breakers for all of the plant equipment. Voltage is further transformed from 480 volts to 208/120 volts as required adjacent to the location that the 208/120 service is required. Power throughout the facility is designed to provide a redundant feature. Single point power failures are reviewed and if possible eliminated on all pertinent equipment. This is evident through the plant and is implemented by using multiple Motor Control Centers, a standby generator, and redundant Automatic Transfer Switches to provide power to similar function equipment.

Control of the wastewater treatment plant will be via a Programmable Logic Controller (PLC). The Operator Interface Unit (OIU) will be located in the control room of the Control Building. The OIU allows the operators to monitor operations and check alarm conditions of the process at the plant without leaving the Control Building. The motors throughout the facility will be capable of being operated in the "Hand" position or automatically (controlled by the PLC). Each of the motors will have a local control station that is physically adjacent to each respective motor. This allows for local or remote operation for three significant reasons. First, should the PLC fail, all effected motors are capable of being operated in the "Hand" position. This will allow operators to run the entire process in "Hand." Secondly, should a motor or pump require maintenance, the operator will be able to control the operation of the motor locally. Thirdly, the National Electric Code (NEC) requires that a disconnect be located adjacent to motors for safety reasons.

Receptacles will be placed in key locations around the facility for ease of maintenance. Spare conduits will also be placed throughout the facility to allow for expansion.

1.14.14.1 Administration Building: The electrical design of the Control Building will provide control service systems for the entire wastewater treatment plant. The Operator Interface Unit (OIU) will be located in the control room. This will allow the operator complete plant monitoring capabilities in the area most used

by personnel. An automatic dialer will report alarms to key personnel when the plant is not staffed.

1.14.14.2 Sequencing Batch Reactors: Control panels for each of the motors located in these areas will be in a convenient location adjacent to the respective motor. All panels will be installed to allow for quick maintenance. All conduit exposed to process and environments in this area will be either aluminum or Polyvinyl Chloride (PVC) coated rigid metallic conduit. This will ensure that corrosion does not effect the performance of the plant and will help to minimize maintenance. The Motor Control Center (MCC) for this area will be located in the electrical room of the Blower Building. Spare starters and space sections in the MCC will be provided for flexibility, backup, and future expansion. A Manual Transfer Switch (MTS) will provide power to the Control Building should either of the MCC's or Automatic Transfer Switches (ATS's) suffer an unexpected fault.

1.14.14.3 Aerobic Digester (Part of the SBR): Control panels for each of the motors located in these areas will be in a convenient location adjacent to the respective motor. The panel will be installed to allow for quick maintenance. All conduit exposed to process and environments in this area will be either aluminum or Polyvinyl Chloride (PVC) rigid metallic conduit. This will ensure that corrosion does not effect the performance of the plant and will help to minimize maintenance. The Aerobic Digesters Blowers will be fed from three different Motor Control Centers (MCC) to minimize the possibility of single point power failures. Space in the electrical room of the Blower Building has been provided for future starters that would be required should future expansion require additional MCC's.

1.14.14.4 Chlorination/Dechlorination Building: The Chlorination/Dechlorination facility has its own transformer and the lighting panel is located on the interior wall of the facility for maintenance convenience. The chemical pumps in this area will have control panels mounted adjacent to the pump installation for ease of operation and maintenance.

1.14.14.5 Blower Building: Control panels for each of the SBR and Aerobic Digester blower motors will be in a convenient location adjacent to the respective motor on the walls in the building. All panels will be installed to allow for quick maintenance. The electrical room in this building is the control center for all the pumps and motors at the facility. The Automatic Transfer Switches, the Programmable Logic Controller (PLC), the Motor Control Centers (MCC's), and all other miscellaneous electrical equipment are located in this area. The doors to access this room have been sized to accommodate the maintenance of the MCC's. All the MCC's have space or spare starters for future use and can be used as a backup to the original equipment. Spare conduits and space for additional MCC sections have been provided for possible future expansion. Also located in the Blower Building are the Washwater Pumps. The washwater pumps, although not "critical" will be fed from two different Motor Control Centers (MCC) to minimize the possibility of single point power failures. Space in the MCC has been provided for future starters.

Section 2

Civil

2.1 Introduction

This section includes the descriptive narrative and computations for the influent and effluent infrastructure system and site utilities and surface drainage at the wastewater treatment plant site.

2.2 Wastewater Influent Components

2.2.1 The existing wastewater treatment facility includes a headworks facility which consists of a bar screen, comminutor, metering flume, and an influent pump station. The influent pump station pumps the wastewater to one of two existing lagoons.

2.2.2 A connection will be made into the existing forcemain that feeds the existing lagoons and a new 14" pipe will be constructed to direct wastewater flow to the new sequencing batch reactor (SBR) facility.

2.3 Potable Water System

2.3.1 General: Potable water for the treatment plant will be obtained from the CAFB potable water system from an existing line located near Well No. 5 at the Munitions Facility. A new 10-inch water line will be constructed from the connection point, along Perimeter Road, and into the wastewater treatment plant site. The new potable water line will be connected to the existing 3-inch line located in the southwest portion of the new treatment plant site to provide continued water service to the area southwest of the treatment plant.

2.3.2 Potable water will be routed to the Control Building, to the washwater pump room in the Blower Building, to the Chlorination/Dechlorination Building, and to four (4) fire hydrants at the wastewater treatment plant site.

2.4 Natural Gas System

2.4.1 Natural gas is not available at the treatment plant site and, therefore, will not be used.

2.5 Wastewater Drain System

2.5.1 General: Refer to the system description in Section 7 of this Design Analysis.

2.6 Asphalt Paving

2.6.1 General: The treatment plant roads and parking will be paved with asphalt. The design of the asphalt will be provided by the Corps of Engineers and is included in Appendix A of this Design Analysis.

2.7 Wastewater Treatment Plant Site Drainage

2.7.1 General: Site drainage will be by open ditches along the side of the plant roads. The site is graded to divert flow to the bar ditches. The bar ditches will convey the generated run-off through culverts to the historic off site flow path. The sludge bed road will be inverted so surface drainage will not enter the beds and the flow will be directed to the road side bar ditches.

2.7.2 Design Basis: The drainage ditches and drainage structures will be sized to accommodate the drainage from a 10-year storm.

2.7.3 Building Floor Elevations: The floors of all buildings will nominally be 1' above the surrounding ground elevation to prevent surface water from entering the buildings.

2.8 Effluent Pipeline

2.8.1 The effluent pipeline will be 24-inch in diameter and placed at a minimum of 0.16% slope. The approximate length of the effluent pipeline will be 1300' and will connect the plant effluent to the existing outfall line from the north lagoon. A new manhole will be constructed over the existing outfall line to make this connection.

2.9 Floodwater Storage System

2.9.1 The flood water storage system facilities consist of an earth embankment flood water storage pond (existing North Lagoon), pump station complete with two submersible pumps and controls, a gravity intake pipe routed from playa lake to the pump station, and a continuously upward sloping forcemain routed from the pump station to the flood water storage pond.

The flood water storage pond will provide temporary storage of water pumped from the playa lake. The flood water storage pond will normally be dry. During

flooding conditions, the flood water storage pond will be filled to offset the contributing impact of the wastewater treatment plant's treated effluent.

The existing wastewater treatment plant has two lagoons (north and south). The north and south lagoons have a combined surface area of approximately 32 acres with an allowable water depth of 3 feet. The north lagoon has a storage capacity of about 48 acre-feet or 15.6 million gallons. This will provide about 21 days of flood water storage capacity at a flow capacity of 0.75 mgd.

The pump station is designed with two constant speed, submersible pumps. The submersible pumps are designed as a duty/standby pump operation. Only one pump is to operate at a given time. The duty pump is designed to provide a 0.75 mgd flow capacity which is the design capacity of the wastewater treatment plant.

The duty pump will operate based on float controls in the pump station. The duty pump will automatically start when playa lake reaches a preset high water level (Elevation 4259). The duty pump will automatically stop when playa lake reaches a preset low water level. The standby pump will automatically start if the duty pump fails to operate. The duty/standby pumps are automatically alternated after each pump operation. The pump station must be manually shut down when the flood water storage pond is full (Elevation 4280).

The gravity intake pipe routed from playa lake to the pump station is designed to provided a flow velocity of approximately 1.5 ft/sec at the design flow rate of 0.75 mgd.

The forcemain routed from the pump station to the flood water storage pond is designed to be continuously upward sloping to eliminate potential for air pockets. Cleanouts are provided at the bends in the pipe routing.

A bar screen inlet structure is provided on the intake pipe at playa lake to prevent large debris from entering the system.

2.9.2 Construction Modification

The existing lagoons must remain in operation until the new wastewater treatment plant is operational. Upon successful startup of the new wastewater treatment plant, the contractor will begin construction modifications to the existing Outlet Structure No. 2.

2.10 Irrigation/Effluent Disposal System

The irrigation/effluent disposal system facilities consist of a concrete effluent storage tank, two constant-speed submersible pumps, pump controls, a hydropneumatic tank, and a forcemain routed from the wastewater treatment plant to the golf course. The forcemain on the discharge side of the submersible pumps is intended to be normally pressurized.

The concrete effluent storage tank will have an approximate storage capacity of 140,000 gallons. The effluent storage tank will normally remain full. During the golf course irrigation

The concrete effluent storage tank will have an approximate storage capacity of 140,000 gallons. The effluent storage tank will normally remain full. During the golf course irrigation season, the effluent storage tank will be periodically drawn down when providing irrigation water supply.

The submersible pumps are designed as a duty/standby pump operation. Only one pump is to operate at a given time. The duty pump is designed to provide a 750 gpm flow capacity.

The duty pump will operate based on the system pressure at the hydropneumatic tank and will automatically start when the system pressure reaches a preset low pressure. The duty pump will automatically stop when the system pressure reaches a preset high pressure. The standby pump will automatically start if the duty pump fails to operate. The duty/standby pumps are automatically alternated after each pump operation.

Treated effluent will be added to the golf course ponds via a manually-operated valve. System pressure will fall after the make-up valve is opened. System pressure will rise after the make-up valve is closed and signal the pump to stop.

A slight odor from the treated effluent can be expected. The degree of odor from the treated effluent should not be significant provided the wastewater treatment plant is operated properly. Signs should be posted at the golf course indicating the golf course is irrigated with treated effluent. The signs should also warn golfers to avoid oral contact with tees, golf balls, hands, etc.

LIBRARY COPY

Final Submittal Specifications

Cannon Air Force Base Wastewater Treatment Plant

Prepared for

Department of the Army
Albuquerque District
U.S. Corps of Engineers
Albuquerque, New Mexico
Contract No. DACA47-95-C-0001

HRMB
Library

Submitted by

MOLZEN-CORBIN

STANLEY CONSULTANTS

A Joint Venture

May 9, 1996

CANNON AIR FORCE BASE
WASTEWATER TREATMENT PLANT DESIGN

SECTION NO.	TITLE	PAGES
BIDDING SCHEDULE		3 thru 5
DIVISION 1 - GENERAL REQUIREMENTS		
01650	Treatment Plant Shakedown Operations	5
DIVISION 2 - SITE WORK		
02050	Demolition	3
02110	Clearing and Grubbing	2
02210	Grading	5
02221	Excavation, Filling, and Backfilling for Buildings	7
02222	Excavation, Trenching, and Backfilling for Utilities Systems	7
02230	Filter Fabric	2
02240	Lime-Stabilized Subgrade	10
02241	Stabilized Aggregate Base Course	8
02511	Concrete Sidewalks and Curbs and Gutters	11
02551	Bituminous Paving for Roads, Streets, and Open Storage Areas	9
02558	Bituminous Tack Coat	4
02559	Bituminous Prime Coat	4
02660	Water Lines	17
02720	Storm-Drainage System	5
02730	Sanitary Sewers	9
02831	Fence, Chain Link	4
02965	Revegetation and Erosion Control	7
DIVISION 3 - CONCRETE		
03100	Structural Concrete Formwork	4
03200	Concrete Reinforcement	3
03250	Expansion Joints, Contraction Joints, and Waterstops	4
03300	Concrete for Building Construction	17
DIVISION 4 - MASONRY		
04200	Masonry	12
DIVISION 5 - METALS		
05055	Welding, Structural	5
05500	Miscellaneous Metals	7
DIVISION 6 - WOOD AND PLASTICS		
06100	Rough Carpentry	4
DIVISION 7 - THERMAL AND MOISTURE PROTECTION		
07920	Joint Sealing	3
DIVISION 8 - DOORS AND WINDOWS		
08330	Overhead Rolling Doors	4
08810	Glass and Glazing	4
DIVISION 9 - FINISHES		
09250	Gypsum Wallboard	4
09310	Ceramic Tile	4
09510	Acoustical Ceilings	3
09650	Resilient Flooring	3
09900	Painting, General	13
DIVISION 10 - SPECIALTIES		
10163	Prefabricated Shower Stalls	2
10430	Exterior Signage	8
10440	Interior Signage	4
10505	Metal Lockers	2
10522	Fire Extinguishers and Cabinets	1
10800	Toilet Accessories	3

DIVISION 11 - EQUIPMENT

11211	Pumps; Water, Centrifugal	10
11220	Mechanical Mixers	4
11310	Submersible Pumps	8
11330	Mechanical Bar Screen	6
11345	Chemical Feed System	5
11375	Air Supply and Diffusion Equipment for Sewage Treatment	11
11378	Duplex Basket Strainers	3
11390	Sequencing Batch Reactor Process Equipment	19

DIVISION 12 - FURNISHINGS

12625	Laboratory Furniture and Equipment	7

DIVISION 13 - SPECIAL CONSTRUCTION

13080	Seismic Protection for Mechanical, Electrical Equipment	10
13120	Metal Buildings	15
13205	Chemical Storage Tank	2
13209	Diesel Fuel Storage Tank	3
13621	Metering Devices	2

DIVISION 14 - CONVEYING SYSTEMS

14300	Hoists and Cranes	5

DIVISION 15 - MECHANICAL

15060	Process Piping	9
15101	Plug Valves	3
15102	Air Service Valves	3
15108	Valve Boxes	2
15109	Fabricated Slide Gates	3
15110	Ball Check Valves	2
15120	Slotted Pipe Skimmer	3
15175	Pressure Tank	2
15250	Thermal Insulation for Mechanical Systems	15
15330	Wet Pipe Sprinkler System, Fire Protection	12
15400	Plumbing, General Purpose	29
15566	Warm Air Heating Systems	5
15653	Air-Conditioning System (Unitary Type)	17
15895	Air Supply, Distribution, Ventilation, and Exhaust System	11
15990	Testing, Adjusting, and Balancing of HVAC System	4

DIVISION 16 - ELECTRICAL

16195	Electrical Identification	2
16262	Automatic Transfer Switches	7
16263	Diesel-Generator Set Stationary 100-2500 kW with Auxiliaries	27
16370	Electrical Distribution System, Aerial	16
16375	Electrical Distribution System, Underground	19
16415	Electrical Work, Interior	29
16421	Low-Voltage Surge Arresters	2
16422	Transient Suppressors	4
16610	Uninterruptible Power Supply (UPS) System	13
16686	Power Supplies	2
16721	Fire Detection and Alarm System	11
16742	Automatic Dialers	4
16745	Operator Interface System	8
16902	Electric Controls and Relays	5
16903	Programmable Logic Controller Systems	12
16904	Liquid Level Sensors	3
16905	Flow Switches	3
16906	Pressure Switches	2
16911	Control Panels	9
16917	Sequence of Operation	8
16941	Electromagnetic Flowmeters	3
16946	Level Transmitters	6

APPENDIX A -- TAG LIST 10 pages

BIDDING SCHEDULE
(To be attached to SF 1442)

Item No.	Description	Estimated Quantity	Unit	Unit Price	Estimated Amount
BASE BID					
0001	Facilities/Structures: Control Bldg, Blower Bldg, Chlor/Dechlor Bldg, Sequence Batch Reactor No. 1 & 2, Aerobic Digester Basin, Chlorine Contact Basin, Headworks Alteration, Effluent Storage Tank, Complete	Job	Sum	***	$_____
0002	Sitework Complete, Including Grading, Utilities, Asphalt Paving, Asphalt Parking, Sidewalk, Curb and Gutter, Fence, Flood Water Storage System, Sludge Compost Facility, Golf Course Irrigation Water Supply, Fuel Tank, Transformer /Switchgear and All Other Work Not Separately Listed	Job	Sum	$_____	$_____
0003	Storm Water Prevention Plan	Job	Sum	$_____	$_____
0004	Operation and Maintenance Manuals	Job	Sum	$_____	$_____
0005	All Other Work Not Separately Listed	Job	Sum	$_____	$_____
	TOTAL AMOUNT BASE BID				$_____

BIDDING SCHEDULE (Cont'd)

NOTES: (Cont'd)

Item No.	Description	Estimated Quantity	Unit	Unit Price	Estimated Amount
OPTION NO. 1					
0006	Emergency Generator	Job	Sum	$_____	$_____
	TOTAL AMOUNT OPTION NO. 1				$_____
OPTION NO. 2					
0007	Cleaning of Sludge From Existing South Lagoon	Job	Sum	$_____	$_____
	TOTAL AMOUNT OPTION NO. 2				$_____

RECAPITULATION

1. TOTAL AMOUNT BASE BID $_____

2. TOTAL AMOUNT BASE BID AND OPTION NO. 1 AND 2 $_____

NOTES:

1. Award of Base Bid and Options (if awarded) will be made to one bidder. Bidders must bid on all items.

2. The Government will accept or reject the Options not later than 60 days after award of the contract. Acceptance of the Options will not constitute Notice to Proceed by the Government with the work on the Options. Notice to Proceed with the work included in the Options may be issued by the Government at any time, but not later than 30 days following award.

3. EVALUATION OF OPTIONS: (FAR 52.217-5) (JUL 1990)

(a) Except when it is determined in accordance with FAR 17.206(b) not to be in the Government's best interests, the Government will evaluate offers for award purposes by adding the total price for all options to the total price for the basic requirements. Evaluation of options will not obligate the Government to exercise the options(s).

4. ARITHMETIC DISCREPANCIES: (MAR 1995)

(a) For the purpose of initial evaluation of bids, the following will be utilized in resolving arithmetic discrepancies found on the face of the bidding schedule as submitted by bidders:

(1) Obviously misplaced decimal points will be corrected;

BIDDING SCHEDULE (Cont'd)

NOTES: (Cont'd)

(2) Discrepancy between unit price and extended price, the unit price will govern;

(3) Apparent errors in extension of unit prices will be corrected;

(4) Apparent errors in addition of lump sum and extended prices will be corrected.

(b) For the purposes of bid evaluation, the Government will proceed on the assumption that the bidder intends his bid to be evaluated on basis of the unit prices, extensions, the totals arrived at by resolution of arithmetic discrepancies as provided above and the bid will be so reflected on the abstract of bids. (EFARS 52.214-5000)

5. If a modification to a bid based on unit prices is submitted, which provides for a lump sum adjustment to the total estimated cost, the application of the lump sum adjustment to each unit price in the bid schedule must be stated. If it is not stated, the bidder agrees that the lump sum adjustment shall be applied on a pro rata basis to every unit price in the bid schedule.

6. PROGRESS PAYMENT REQUESTS made by the Contractor pursuant to the provisions of Contract Clause, PAYMENTS UNDER FIXED-PRICE CONSTRUCTION CONTRACTS, shall be submitted on ENG FORM 93 to the billing office as designated on Block 26, Standard Form 1442, Solicitation, Offer and Award, back. ENG FORM 93 shall be submitted to that office on the 1st of each month in appropriate form and certified. A copy of ENG FORM 93 and Certification (SWA 739-R) are attached at the end of the Contract Clauses. Photocopies of the form shall be furnished on that same date to the Corps of Engineers offices designated at the Pre-Construction Conference.

SECTION 01650 - TREATMENT PLANT SHAKEDOWN OPERATIONS

PART 1 - GENERAL

1.1 REQUIREMENTS INCLUDED

1.1.1 Provide personnel, equipment, supplies, and services for verification and shakedown of new treatment plant systems and associated facilities.

1.2 SUBMITTALS

The following shall be submitted in accordance with SECTION: 01300 - SUBMITTALS:

SD-08, Statements

Notification.

Notification of Contractor's schedule to start system verification and shakedown, at least 30 calendar days in advance.

SD-13, Certificates

Manufacturer's Certifications.

Manufacturer's written certification that components are properly installed, calibrated, fully functioning, and ready to be put into service.

1.3 COMPONENT VERIFICATION

1.3.1 Verify each component of system is fully functional and ready to be put into service, including related monitoring and control facilities.

1.3.2 Calibrate components unless component cannot be calibrated until system verification.

1.3.3 Demonstrate to Contracting Officer each component is fully functional, calibrated, and ready to be put into service.

1.3.4 Deliver required spare parts, lubricants, maintenance tools, and equipment to Government.

1.3.5 Provide component manufacturer's written certification to Contracting Officer that components are properly installed, calibrated, fully functioning, and ready to be put into service.

1.3.6 Complete for all components in system before starting system verification.

1.4 SYSTEM VERIFICATION

1.4.1 Schedule in writing minimum 30 days in advance with Contracting Officer.

1.4.2 Have component manufacturer's field service representatives on-site during system verification.

1.4.3 Have trades and specialists on-site during system verification required to adjust, troubleshoot, and correct components, system, and associated facilities.

1.4.4 Verify all system components and system fully functioning, calibrated, and ready to put into service under all operating, emergency and alarm conditions.

1.4.5 Operate system making all adjustments to equipment, valves, and system requested by Government's contracted operations staff.

1.4.6 Provide qualified Contractor employee(s) available to make operational adjustments any time required by Government's contracted operations staff.

1.4.6.1 May be 24-hours per day for some systems.

1.4.7 Provide equipment manufacturer's recommended maintenance.

1.4.8 Provide facilities housekeeping and cleaning.

1.4.9 Demonstrate to Contracting Officer system components and system fully functional, calibrated, and system is ready to be put into service.

1.4.10 Complete any required training of Government's contracted operations staff by equipment manufacturers.

1.4.11 If system verification can not be demonstrated when scheduled.

1.4.11.1 Repeat component verification for components resulting in system verification not being demonstrated.

1.4.11.2 Re-schedule system verification in writing minimum 7 days in advance with Contracting Officer unless lesser time is acceptable to Contracting Officer.

1.4.12 Complete before starting system shakedown.

1.5 SYSTEM SHAKEDOWN

1.5.1 Schedule in writing minimum 30 days in advance with Contracting Officer unless started on completion of system verification.

1.5.2 Operate system making all adjustments to equipment, valves and system requested by Government's contracted operations staff.

1.5.3 Provide qualified Contractor employee(s) available to make operational adjustments any time required by Government's contracted operations staff.

1.5.3.1 May be 24-hours per day for some systems.

1.5.4 Provide equipment manufacturer's recommended maintenance.

1.5.5 Provide facilities housekeeping and cleaning.

1.5.6 Continue until scheduled system shakedown time has successfully occurred and substantial completion of system is certified by Contracting Officer.

1.5.7 With Contractor's written concurrence, Government's contracted operations staff will make operational adjustments and provide normal housekeeping and cleaning of facilities and equipment during system shakedown.

1.5.7.1 Government or Government's contracted operations staff will not be responsible for any damage to adjusted or cleaned equipment or facilities.

1.5.8 Included in contract time.

1.6 SYSTEM SHAKEDOWN INTERRUPTION

1.6.1 Definitions

1.6.1.1 "Level 1 interruption" means:

a. Failure of any single system component when system can, and does, continue to operate and be controlled and monitored as intended and failure is remedied within 24-hours.

b. Subsequent failure(s) of the same component cannot be classified as a level 1 interruption.

1.6.1.2 "Level 2 interruption" means:

a. Failure of any single system component which interrupts system functionability, reliability, control, monitoring or operation for less than 8-hours, or

b. Concurrent period of time when two system components have failed when system can, and does, continue to operate and be controlled and monitored as intended and failures are remedied within 24-hours of first component failure, or

c. Single system component failure which meets the requirements for a level 1 interruption except for being a subsequent failure(s) of the same component, or

d. When more than two level 1 interruptions have occurred during the shakedown of a system, or

e. Single system failure which would meet the requirements for a level 1 interruption except failure not remedied within 24-hours.

f. Subsequent failure(s) of any component causing a level 2 interruption cannot be classified as a level 2 interruption.

1.6.1.3 "Level 3 interruption" means:

a. Any component or system failure which interrupts system functionability, reliability, control, monitoring or operation for more than 8-hours, or

b. When more than two level 2 interruptions have occurred during the shakedown of a system, or

c. Component failure(s) which would meet the requirements for a level 2 interruption except for being a subsequent failure of the same component, or

d. Single system component failure which would meet the requirements for a level 2 interruption except failure not remedied with 8-hours, or

e. Any other failures which are not a level 1 or level 2 interruption

1.6.1.4 Failure includes components not being calibrated.

1.6.2 If level 1 interruption occurs:

1.6.2.1 Continue system shakedown operations.

1.6.2.2 Shakedown time continues to run.

1.6.3 If level 2 interruption occurs:

1.6.3.1 Continue system shakedown operations.

1.6.3.2 Shakedown time suspended until all components and system are fully functional.

1.6.3.3 Repeat component verification for components which have failed.

1.6.4 If level 3 interruption occurs:

1.6.4.1 Continue system shakedown operations.

1.6.4.2 Repeat system verification.

1.6.4.3 Restart shakedown starting at 0 (zero) time.

PART 2 - PRODUCTS (Not Applicable)

PART 3 - EXECUTION

3.1 PHASE I - CLEAN WATER OPERATIONS

3.1.1 Provide temporary piping from Golf Course Irrigation pump discharge to Sequencing Batch Reactor influent forcemain piping.

3.1.2 Fill Sequencing Batch Reactors and Aerobic Digester to low water level as indicated on Drawings with clean water. Fill Effluent Storage Tank and Chlorine Contact Basin to maximum water level with clean water.

3.1.3 Operate new plant for a minimum of 7 consecutive calendar days with all facilities fully functioning in the "automatic" mode of control. Each component shall be operated in the "hand" mode of control at least twice during the 7-day clean water operations.

3.1.4 Upon successful completion of the clean water operations phase, completely drain the Sequencing Batch Reactors and drain the Aerobic

Digester to the lowest level that will still allow the basin mixer to function.

3.1.5 Remove temporary piping from Golf Course Irrigation pump discharge to Sequencing Batch Reactor influent forcemain piping.

3.2 PHASE II - WASTEWATER OPERATIONS

3.2.1 Install permanent piping connection from Influent Lift Station forcemain to Sequencing Batch Reactor influent forcemain piping.

3.2.2 Operate new plant for a minimum of 23 consecutive calendar days with all facilities fully functioning.

- - o 0 o - -

SECTION 02050

DEMOLITION

PART 1 GENERAL

1.1 REFERENCES (Not Applicable)

1.2 GENERAL REQUIREMENTS

The work includes demolition, salvage of identified items and materials, and removal of resulting rubbish and debris. Rubbish and debris shall be removed from Government property daily, unless otherwise directed, to avoid accumulation at the demolition site. Materials that cannot be removed daily shall be stored in areas specified by the Contracting Officer. In the interest of conservation, salvage shall be pursued to the maximum extent possible; salvaged items and materials shall be disposed of as specified.

1.3 SUBMITTALS

The following shall be submitted in accordance with Section 01300 SUBMITTAL DESCRIPTIONS:

SD-18 Records

Work Plan.

The procedures proposed for the accomplishment of the work. The procedures shall provide for safe conduct of the work, careful removal and disposition of materials specified to be salvaged, protection of property which is to remain undisturbed, coordination with other work in progress, and timely disconnection of utility services. The procedures shall include a detailed description of the methods and equipment to be used for each operation, and the sequence of operations.

1.4 DUST CONTROL

The amount of dust resulting from demolition shall be controlled to prevent the spread of dust to occupied portions of the construction site and to avoid creation of a nuisance in the surrounding area. Use of water will not be permitted when it will result in, or create, hazardous or objectionable conditions such as ice, flooding and pollution.

1.5 PROTECTION

1.5.1 Protection of Existing Property

Before beginning any demolition work, the Contractor shall survey the site and examine the drawings and specifications to determine the extent of the work. The Contractor shall take necessary precautions to avoid damage to existing items to remain in place, to be reused, or to remain the property of the Government; any damaged items shall be repaired or replaced as approved by the Contracting Officer. The Contractor shall coordinate the work of this section with all other work and shall construct and maintain shoring, bracing, and supports as required. The Contractor shall ensure that structural elements are not overloaded and shall be responsible for increasing structural supports or adding new supports as may be required as a result of any cutting, removal, or demolition work performed under this contract.

1.5.2 Protection From the Weather

The interior of buildings to remain and salvageable materials and equipment shall be protected from the weather at all times.

1.5.3 Protection of Trees

Trees within the project site which might be damaged during demolition and which are indicated to be left in place shall be protected by a 1.83 m (6

foot) high fence. The fence shall be securely erected a minimum of 1.5 m (5 feet) from the trunk of individual trees or follow the outer perimeter of branches or clumps of trees. Any tree designated to remain that is damaged during the work under this contract shall be replaced in kind or as approved by the Contracting Officer.

1.6 BURNING

The use of burning at the project site for the disposal of refuse and debris will not be permitted.

1.7 USE OF EXPLOSIVES

Use of explosives will not be permitted.

PART 2 PRODUCTS (Not Applicable)

PART 3 EXECUTION

3.1 EXISTING STRUCTURES

Existing structures indicated shall be removed to 0.6 meter (2 feet) below grade. Interior walls, other than retaining walls and partitions, shall be removed to 0.6 meters (2 feet) below grade or to top of concrete slab on ground. Basement slabs shall be broken up to permit drainage. Sidewalks, curbs, gutters and street light bases shall be removed as indicated.

3.2 UTILITIES

Existing utilities shall be removed as indicated. When utility lines are encountered that are not indicated on the drawings, the Contracting Officer shall be notified prior to further work in that area.

3.3 FILLING

Holes, open basements and other hazardous openings shall be filled in accordance with Section 02221 - Excavating, Filling, and Backfilling for Buildings.

3.4 DISPOSITION OF MATERIAL

Title to material and equipment to be demolished, except Government salvage and historical items, is vested in the Contractor upon receipt of notice to proceed. The Government will not be responsible for the condition, loss or damage to such property after notice to proceed.

3.4.1 Salvageable Items and Material

Contractor shall salvage items and material to the maximum extent possible.

3.4.1.1 Material Salvaged for the Contractor

Material salvaged for the Contractor shall be stored as approved by the Contracting Officer and shall be removed from Government property before completion of the contract. Material salvaged for the Contractor shall not be sold on the site.

3.4.1.2 Items Salvaged for the Government

Salvaged items to remain the property of the Government shall be removed in a manner to prevent damage, and packed or crated to protect the items from damage while in storage or during shipment. Items damaged during removal or storage shall be repaired or replaced to match existing items. Containers shall be properly identified as to contents.

3.4.1.3 Historical Items

Historical items shall be removed in a manner to prevent damage. The following historical items shall be delivered to the Government for

disposition: Corner stones, contents of corner stones, and document boxes wherever located on the site.

3.4.2 Unsalvageable Material

Concrete, masonry, and other noncombustible material, except concrete permitted to remain in place, shall be disposed of in the disposal area located off the base.

3.5 CLEAN UP

Debris and rubbish shall be removed from basement and similar excavations. Debris shall be removed and transported in a manner that prevents spillage on streets or adjacent areas. Local regulations regarding hauling and disposal shall apply.

-- o O o --

SECTION 02110 - CLEARING AND GRUBBING

PART 1 - GENERAL

1.1 DEFINITIONS

1.1.1 Clearing

Clearing shall consist of the felling, trimming, and cutting of trees into sections and the satisfactory disposal of the trees and other vegetation designated for removal, including down timber, snags, brush, and rubbish occurring in the areas to be cleared.

1.1.2 Grubbing

Grubbing shall consist of the removal and disposal of stumps, roots larger than 3 inches in diameter, and matted roots from the designated grubbing areas.

1.2 SUBMITTALS

The following shall be submitted in accordance with Section 01300 - SUBMITTALS:

SD-18, Records

Permission to dispose of cleared and grubbed materials on private property shall be in writing, and a copy of this permit shall be filed with the Contracting Officer.

PART 2 - PRODUCTS (Not Applicable)

PART 3 - EXECUTION

3.1 CLEARING

Trees, stumps, roots, brush, and other vegetation in areas to be cleared shall be cut off flush with or below the original ground surface, except such trees and vegetation as may be indicated or directed to be left standing. Trees designated to be left standing within the cleared areas shall be trimmed of dead branches 1-1/2 inches or more in diameter and shall be trimmed of all branches the heights indicated or directed. Limbs and branches to be trimmed shall be neatly cut close to the bole of the tree or main branches. Cuts more than 1-1/2 inches in diameter shall be painted with an approved tree-wound paint. Trees and vegetation to be left standing shall be protected from damage incident to clearing, grubbing, and construction operations by the erection of barriers or by such other means as the circumstances require.

3.2 GRUBBING

Material to be grubbed, together with logs and other organic or metallic debris not suitable for foundation purposes, shall be removed to a depth of not less than 18 inches below the original surface level of the ground in areas indicated to be grubbed and in areas indicated as construction areas under this contract, such as areas for buildings, and areas to be paved. Depressions made by grubbing shall be filled with suitable material and compacted to make the surface conform with the original adjacent surface of the ground.

3.3 TREE REMOVAL

Where indicated or directed, trees and stumps that are designated as trees shall be removed from areas outside those areas designated for clearing and grubbing. This work shall include the felling of such trees and the removal of their stumps and roots as specified in paragraph "GRUBBING." Trees shall be disposed of as specified in paragraph "DISPOSAL OF MATERIALS."

3.4 DISPOSAL OF MATERIALS

Logs, stumps, roots, brush, rotten wood, and other refuse from the clearing and grubbing operations, shall be disposed of outside the limits of Government-controlled land at the Contractor's responsibility. Permission to dispose of cleared and grubbed materials on private property shall be in writing, and a copy of the permit shall be filed with the Contracting Officer.

- - o 0 o - -

SECTION 02210 - GRADING

PART 1 - GENERAL

1.1 REFERENCES

The publications listed below form a part of this specification to the extent referenced. The publications are referred to in the text by basic designation only.

AMERICAN SOCIETY FOR TESTING AND MATERIALS (ASTM)

ASTM D 1556	(1990) Density and Unit Weight of Soil in Place by the Sand-Cone Method
ASTM D 1557	(1991) Laboratory Compaction Characteristics of Soil Using Modified Effort (56,000 ft-lbf/cu. ft. (2,700 kN-m/cu.m.)), Procedure C
ASTM D 2487	(1990) Classification of Soils for Engineering Purposes
ASTM D 2922	(1991) Density of Soil and Soil-Aggregate in Place by Nuclear Methods (Shallow Depth), Method B
ASTM D 3017	(1988) Water Content of Soil and Rock in Place by Nuclear Methods (Shallow Depth)

1.2 DEFINITIONS

1.2.1 Satisfactory Materials

Materials classified in ASTM D 2487 as GC, GM, SP, SC, SM, CL, GW, GP, SW, and ML in undisturbed state, and free from roots and other organic matter, trash, debris, and frozen materials and stones larger than 6 inches in any dimension are satisfactory.

1.2.2 Unsatisfactory Materials

Materials which do not comply with the requirements for satisfactory materials are unsatisfactory. Materials classified in ASTM D 2487 as CH, ML in disturbed state, MH, Pt, OH, and OL are unsatisfactory.

1.2.3 Cohesionless and Cohesive Materials

Cohesive materials include materials classified as GC, SC, ML, CL, MH, and CH. Cohesionless materials include materials classified in ASTM D 2487 as GW, GP, SW, and SP. Materials classified as GM and SM will be identified as cohesionless only when the fines have a plasticity index of zero.

1.2.4 Degree of Compaction

Degree of compaction is a percentage of the maximum density obtained by the test procedure presented in ASTM D 1557, Procedure C abbreviated below as a percent of laboratory maximum density.

1.2.5 Topsoil

Material obtained from offsite areas suitable for topsoils, is defined as natural, friable surface soil possessing the characteristics of representative soils in the vicinity that produce heavy growth of crops, grass, or other vegetation.

1.3 SUBMITTALS

The following shall be submitted in accordance with Section 01300 - SUBMITTALS:

SD-08 Statements

Field Testing Control.

Qualifications of the commercial testing laboratory who will be performing all testing in accordance with paragraph FIELD TESTING CONTROL.

SD-09 Reports

Field Testing Control.

Satisfactory Materials.

Certified test reports and analysis certifying that the satisfactory materials proposed for use at the project site conform to the specified requirements, and for all tests conducted in accordance with paragraph FIELD TESTING CONTROL.

1.4 SUBSURFACE DATA

The subsoil investigation report may be examined at the Contracting Officer's office. These data represent the best subsurface information available; however, variations may exist in the subsurface between boring locations.

PART 2 - PRODUCTS

2.1 ROCK FOR SLOPE PROTECTION

Coarse rock from excavations shall be conserved and used for constructing the slopes of embankments parallel or adjacent to streams, for constructing slopes or sides and bottom of channels, and for protection against erosion. Hand placing of coarse rock from excavation will not be required.

2.2 BORROW MATERIAL

Borrow material shall be selected to meet requirements and conditions of the particular fill for which it is to be used. Necessary clearing, grubbing, disposal of debris, and satisfactory drainage of borrow pits shall be performed by the Contractor as incidental operations to the borrow excavation.

2.2.1 Selection

Borrow materials shall be obtained from sources outside the limits of Government-controlled land. Borrow materials shall be subject to approval. Unless specifically provided, no borrow shall be obtained within the limits of the project site without prior written approval. The source of borrow material shall be the Contractor's responsibility. Unless otherwise provided in the contract, the Contractor shall obtain from the owners the

right to procure material, shall pay all royalties and other charges involved, and shall bear all the expense of developing the sources, including rights-of-way for hauling.

2.2.2 Borrow Pits

Except as otherwise permitted, borrow pits shall be excavated to afford adequate drainage. Overburden and other spoil material shall be disposed of or used for special purposes. Borrow pits shall be neatly trimmed after the excavation is completed.

PART 3 - EXECUTION

3.1 EXCAVATION

After topsoil removal has been completed, excavation of every description, regardless of material encountered, within the grading limits of the project shall be performed to the lines and grades indicated. Satisfactory excavation material shall be transported to and placed in fill areas within the limits of the work. All unsatisfactory material including any soil which is disturbed by the Contractor's operations or softened due to exposure to the elements and water and surplus material shall be disposed of in areas approved for surplus material storage. Unsatisfactory material excavated below the grade shown and replaced with satisfactory material as directed shall be included in the contract unit price for excavation. Excavations carried below the depths indicated, without specific directions, shall, except as otherwise specified, be refilled to the proper grade with satisfactory material as directed. All additional work of this nature shall be at the Contractor's expense. Excavation and filling shall be performed in a manner and sequence that will provide drainage at all times. Excavations shall be kept free from water while construction therein is in progress. Material required for fills in excess of that produced by excavation within the grading limits shall be obtained from borrow areas.

3.2 DITCHES, GUTTERS, AND CHANNEL CHANGES

Ditches, gutters, and channel changes shall be cut accurately to the cross sections and grades indicated. All roots, stumps, rock, and foreign matter in the sides and bottom of ditches, gutters, and channel changes shall be trimmed and dressed or removed to conform to the slope, grade, and shape of the section indicated. Care shall be taken not to excavate ditches and gutters below the grades indicated. Unapproved excessive ditch and gutter excavation shall be backfilled to grade either with satisfactory, thoroughly compacted material or with suitable stone or cobble to form an adequate gutter paving as directed at no additional cost to the government. All ditches and gutters excavated under this section shall be maintained until final acceptance of the work. Satisfactory material excavated from ditches and channel changes shall be placed in fill areas. Unsatisfactory and excess excavated material shall be disposed of in accordance with directions in paragraph EXCAVATION. No excavated material shall be deposited closer to the edges of the ditches than indicated and in no case less than 3 feet.

3.3 BACKFILL ADJACENT TO STRUCTURES

Backfill adjacent to structures shall be placed and compacted uniformly in such manner as to prevent wedging action or eccentric loading upon or against the structures. Slopes bounding or within areas to be backfilled shall be stepped or serrated to prevent sliding of the fill. During backfilling operations and in the formation of embankments, equipment that will overload the structure in passing over and compacting these fills

section or shall be separately stockpiled if it cannot be readily placed. Satisfactory material in excess of that required for the permanent work and all unsatisfactory material shall be disposed of Section 02210 GRADING.

3.11 FINAL GRADE OF SURFACES TO SUPPORT CONCRETE

Excavation to final grade shall not be made until just before concrete is to be placed.

3.12 SUBGRADE PREPARATION

Unsatisfactory material in surfaces to receive fill or in excavated areas shall be removed and replaced with satisfactory materials. The surface shall be scarified to a depth of 150 mm (6 inches) before the fill is started. Sloped surfaces steeper than 1 vertical to 4 horizontal shall be plowed, stepped, benched, or broken up so that the fill material will bond with the existing material. When subgrades are less than the specified density, the ground surface shall be broken up to a minimum depth of 150 mm, (6 inches,) pulverized, and compacted to the specified density. When the subgrade is part fill and part excavation or natural ground, the excavated or natural ground portion shall be scarified to a depth of 300 mm (12 inches) and compacted as specified for the adjacent fill. Material shall not be placed on surfaces that are muddy, frozen, or contain frost. Compaction shall be accomplished by sheepsfoot rollers, pneumatic-tired rollers, steel-wheeled rollers, or other approved equipment well suited to the soil being compacted. Material shall be moistened or aerated as necessary to provide the moisture content that will readily facilitate obtaining the specified compaction with the equipment used. Minimum subgrade density shall be as specified in paragraph FILLING AND BACKFILLING.

3.13 FILLING AND BACKFILLING

Satisfactory materials shall be used in bringing fills and backfills to the lines and grades indicated and for replacing unsatisfactory materials. Satisfactory materials shall be placed in horizontal layers not exceeding 200 mm (8 inches) in loose thickness, or 150 mm (6 inches) when hand-operated compactors are used. After placing, each layer shall be plowed, disked, or otherwise broken up, moistened or aerated as necessary, thoroughly mixed and compacted as specified. Backfilling shall not begin until construction below finish grade has been approved, underground utilities systems have been inspected, tested and approved, forms removed, and the excavation cleaned of trash and debris. Backfill shall be brought to indicated finish grade and shall include backfill for outside grease interceptors and underground fuel tanks. Backfill shall not be placed in wet or frozen areas. Where pipe is coated or wrapped for protection against corrosion, the backfill material up to an elevation 600 mm (2 feet) above sewer lines and 300 mm (1 foot) above other utility lines shall be free from stones larger than 25.4 mm (1 inch) in any dimension. Heavy equipment for spreading and compacting backfill shall not be operated closer to foundation or retaining walls than a distance equal to the height of backfill above the top of footing; the area remaining shall be compacted in layers not more than 100 mm (4 inches) in compacted thickness with power-driven hand tampers suitable for the material being compacted. Backfill shall be placed carefully around pipes or tanks to avoid damage to coatings, wrappings, or tanks. Backfill shall not be placed against foundation walls prior to 7 days after completion of the walls. As far as practicable, backfill shall be brought up evenly on each side of the wall and sloped to drain away from the wall. Each layer of fill and backfill shall be compacted to not less than the percentage of maximum density specified below:

	Percent Laboratory maximum density	
	Cohesive material	Cohesionless material
Fill, embankment, and backfill		
Under structures, building slabs, steps, around footings, and in trenches	90	95
Under sidewalks and grassed areas	85	90
Under nonexpansive materials	Compacted to not less than 92 percent	
Subgrade		
Under building slabs and steps, top 300 mm	90	95
Under sidewalks, top 150 mm	85	90
Under nonexpansive fill, top 6 inches	Compacted to not less than 92 percent	

	Percent Laboratory maximum density	
	Cohesive material	Cohesionless material
Fill, embankment, and backfill		
Under structures, building slabs, steps, around footings, and in trenches	90	95
Under sidewalks and grassed areas	85	90
Under nonexpansive materials	Compacted to not less than 92 percent	
Subgrade		
Under building slabs and steps, top 12 inches	90	95
Under sidewalks, top 6 inches	85	90

Approved compacted subgrades that are disturbed by the Contractor's operations or adverse weather shall be scarified and compacted as specified herein before to the required density prior to further construction thereon. Recompaction over underground utilities and heating lines shall be by hand tamping.

3.14 TESTING

Testing shall be the responsibility of the Contractor and shall be performed at no additional cost to the Government. Testing shall be performed by a Government-approved commercial testing laboratory or may be performed by the Contractor subject to approval. Field in-place density shall be determined in accordance with ASTM D 1556 or ASTM D 2922 Method B. When ASTM D 2922 Method B is used, the calibration curves shall be checked and adjusted if necessary by the procedure described in ASTM D 2922 Method B, paragraph ADJUSTING CALIBRATION CURVE. ASTM D 2922 Method B results in a wet unit weight of soil and when using this method ASTM D 3017 shall be used to determine the moisture content of the soil. The calibration curves furnished with the moisture gauges shall also be checked along with density

calibration checks as described in ASTM D 3017. The calibration checks of both the density and moisture gauges shall be made at the beginning of a job on each different type of material encountered and at intervals as directed by the Contracting Officer. The following number of tests, if performed at the appropriate time, shall be the minimum acceptable for each type operation. Perform one check test using ASTM D 1556 for every fourth test by the nuclear method.

3.14.1 In-Place Densities

3.14.1.1 In-Place Density of Subgrades

One test per 95 square meters (1,000 square foot) or fraction thereof.

3.14.1.2 In-Place Density of Fills and Backfills

One test per 95 square meters (1,000 square foot) or fraction thereof of each lift for fill or backfill areas compacted by other than hand or hand-operated machines. The density for each lift of fill or backfill materials for trenches, pits, building perimeters or other structures or areas less than 150 meters (500 feet) in width, which are compacted with hand or hand-operated machines shall be tested as follows: One test per each area less than 45 square meters, (500 square feet,) or one test for each 30 linear meter (100 linear foot) of long narrow fills 100 meters (300 feet) or more in length. If ASTM D 2922 Method B is used, in-place densities shall be checked by ASTM D 1556 as follows: One check per lift for each 7 linear meters (23 linear feet) of long narrow fills, and a minimum of 5 checks per lift for other fill and backfill areas.

3.14.2 Moisture Content

In the stockpile, excavation or borrow areas, a minimum of two tests per day per type of material or source of materials being placed is required during stable weather conditions. During unstable weather, tests shall be made as dictated by local conditions and approved moisture content shall be tested in accordance with ASTM D 2216.

3.14.3 Optimum Moisture and Laboratory Maximum Density

Tests shall be made for each type material or source of material including borrow material to determine the optimum moisture and laboratory maximum density values. One representative test per 215 cubic meters (280 cubic yards) of fill and backfill, or when any change in material occurs which may affect the optimum moisture content or laboratory maximum density will be made.

3.15 CAPILLARY WATER BARRIER

Capillary water barrier under concrete floor and area-way slabs on grade shall be placed directly on the subgrade and shall be compacted with a minimum of two passes of a hand-operated plate-type vibratory compactor. Compacted thickness shall be 150 mm (6 inches).

3.16 GRADING

Areas within 1.5 m (5 feet) outside of each building and structure line shall be constructed true-to-grade, shaped to drain, and shall be maintained free of trash and debris until final inspection has been completed and the work has been accepted.

3.17 SPREADING TOPSOIL

Areas outside the building lines from which topsoil has been removed shall be topsoiled. The surface shall be free of materials that would hinder planting or maintenance operations. The subgrade shall be pulverized to a depth of 50 mm (2 inches) by disking or plowing for the bonding of topsoil with the subsoil. Topsoil shall then be uniformly spread, graded, and compacted to the thickness, elevations, slopes shown, and left free of surface irregularities. Topsoil shall be compacted by one pass of a

cultipacker, roller, or other approved equipment weighing 1.46 kN/m to 2.34 kN/m (100 to 160 pounds per linear foot) of roller. Topsoil shall not be placed when the subgrade is frozen, excessively wet, extremely dry, or in a condition otherwise detrimental to seeding, planting, or proper grading.

3.18 PROTECTION

Settlement or washing that occurs in graded, topsoiled, or backfilled areas prior to acceptance of the work shall be repaired and grades reestablished to the required elevations and slopes.

-- o O o --

SECTION 02222 - EXCAVATION, TRENCHING, AND BACKFILLING FOR UTILITIES SYSTEMS

PART 1 - GENERAL

1.1 REFERENCES

The publications listed below form a part of this specification to the extent referenced. The publications are referred to in the text by basic designation only.

AMERICAN SOCIETY FOR TESTING AND MATERIALS (ASTM)

ASTM D 422	(1963; R 1972) Particle-Size Analysis of Soils
ASTM D 1556	(1990) Density of Soil in Place by the Sand-Cone Method
ASTM D 1557	(1991) Laboratory Compaction Characteristics of Soil Using Modified Effort (56,000 ft-lbf/cu. ft. (2,700 kN-m/cu.m.)), Procedure C
ASTM D 2487	(1990) Classification of Soils for Engineering Purposes
ASTM D 2922	(1991) Density of Soil and Soil-Aggregate in Place by Nuclear Methods (Shallow Depth),Method B
ASTM D 3017	(1988) Water Content of Soil and Rock in Place by Nuclear Methods (Shallow Depth)

1.2 DEFINITIONS

1.2.1 Degree of Compaction

Degree of compaction shall be expressed as a percentage of the maximum density obtained by the test procedure presented in ASTM D 1557, Procedure C.

1.3 SUBMITTALS

The following shall be submitted in accordance with Section 01300 - SUBMITTALS:

SD-09 Reports

Field Density Tests.

Testing of Backfill Materials.

Copies of all laboratory and field test reports within 24 hours of the completion of the test.

PART 2 - PRODUCTS

2.1 MATERIALS

2.1.1 Satisfactory Materials

Satisfactory materials shall consist of any material classified by ASTM D 2487 as CL, GW, GP, SW ,SP, GM, GC, SM, SC and ML in undisturbed state.

2.1.2 Unsatisfactory Materials

Unsatisfactory materials shall be materials that do not comply with the requirements for satisfactory materials. Unsatisfactory materials include but are not limited to those materials containing roots and other organic matter, trash, debris, frozen materials and stones larger than 3 inches, and materials classified in ASTM D 2487, as ML in distubed state, MH, CH, PT, OH, and OL. Unsatisfactory materials also include man-made fills, refuse, or backfills from previous construction.

2.1.3 Cohesionless and Cohesive Materials

Cohesionless materials shall include materials classified in ASTM D 2487 as GW, GP, SW, and SP. Cohesive materials include materials classified as GC, SC, ML, CL, MH, and CH. Materials classified as GM and SM will be identified as cohesionless only when the fines are nonplastic.

2.1.4 Unyielding Material

Unyielding material shall consist of rock and gravelly soils with stones greater than 3 inches in any dimension or as defined by the pipe manufacturer, whichever is smaller.

2.1.5 Unstable Material

Unstable material shall consist of materials too wet to properly support the utility pipe, conduit, or appurtenant structure.

2.1.6 Select Granular Material

Select granular material shall consist of well-graded sand, gravel, crushed gravel, or crushed stone, and shall contain not more than 10 percent by weight of material passing a No. 200 mesh sieve and no less than 95 percent by weight passing the 1-inch sieve. The maximum allowable aggregate size shall be 1-1/2 inches, or the maximum size recommended by the pipe manufacturer, whichever is smaller.

2.1.7 Initial Backfill Material

Initial backfill shall consist of select granular material or satisfactory materials free from rocks 0.75 inches or larger in any dimension or free from rocks of such size as recommended by the pipe manufacturer, whichever is smaller.

2.1.8 Plastic Marking Tape

Plastic marking tape shall be acid and alkali-resistant polyethylene film, 6-inches wide with minimum thickness of 0.004 inch. Tape shall have a

minimum strength of 1750 psi lengthwise and 1500 psi crosswise. The tape shall be manufactured with integral wires, foil backing or other means to enable detection by a metal detector when the tape is buried up to 3 feet deep. The tape shall be of a type specifically manufactured for marking and locating underground utilities. The metallic core of the tape shall be encased in a protective jacket or provided with other means to protect it from corrosion. Tape color shall be as specified in TABLE 1 and shall bear a continuous printed inscription describing the specific utility.

TABLE 1. Tape Color

Red:	Electric
Yellow:	Hypochlorite Solution, bisulfite solution, Dangerous Materials
Orange:	Telephone, Telegraph, Television, Police, and Fire Communications
Blue:	Water Systems
Green:	Sewer Systems

PART 3 - EXECUTION

3.1 EXCAVATION

Excavation shall be performed to the lines and grades indicated. During excavation, material satisfactory for backfilling shall be stockpiled in an orderly manner at a distance from the banks of the trench equal to 1/2 the depth of the excavation, but in no instance closer than 2 feet. Excavated material not required or not satisfactory for backfill shall be removed from the site. Grading shall be done as may be necessary to prevent surface water from flowing into the excavation, and any water accumulating therein shall be removed to maintain the stability of the bottom and sides of the excavation. Unauthorized overexcavation shall be backfilled in accordance with paragraph BACKFILLING AND COMPACTION at no additional cost to the Government.

3.1.1 Trench Excavation

The trench shall be excavated as recommended by the manufacturer of the pipe to be installed. Trench walls below the top of the pipe shall be sloped, or made vertical, and of such width as recommended in the manufacturer's installation manual. Where no manufacturer's installation manual is available, trench walls shall be made vertical. Trench walls shall be shored, cut back to a stable slope, or provided with equivalent means of protection for employees who may be exposed to moving ground or cave in, in accordance with OSHA and safety regulations. Trench walls which are cut back shall be excavated to at least the angle of repose of the soil. Special attention shall be given to slopes which may be adversely affected by weather or moisture content. The trench width below the top of pipe shall not exceed 24 inches plus pipe outside diameter (O.D.) for pipes of less than 24 inches inside diameter and shall not exceed 36 inches plus pipe outside diameter for sizes larger than 24 inches inside diameter. Where recommended trench widths are exceeded without the approval of the Contracting Officer, redesign, stronger pipe, or special installation procedures shall be utilized by the Contractor. The cost of redesign, stronger pipe, or special installation procedures shall be borne by the Contractor without any additional cost to the Government.

3.1.1.1 Bottom Preparation

The bottoms of trenches shall be accurately graded to provide uniform bearing and support for the bottom quadrant of each section of the pipe. Bell holes shall be excavated to the necessary size at each joint or

3.1.1.1 Bottom Preparation

The bottoms of trenches shall be accurately graded to provide uniform bearing and support for the bottom quadrant of each section of the pipe. Bell holes shall be excavated to the necessary size at each joint or coupling to eliminate point bearing. Stones of 3 inches or greater in any dimension, or as recommended by the pipe manufacturer, whichever is smaller, shall be removed to avoid point bearing.

3.1.1.2 Removal of Unyielding Material

Where unyielding material is encountered in the bottom of the trench, such material shall be removed 4 inches below the required grade and replaced with suitable materials as provided in paragraph BACKFILLING AND COMPACTION.

3.1.1.3 Removal of Unstable Material

Where unstable material is encountered in the bottom of the trench, such material shall be removed to the depth directed and replaced to the proper grade with select granular material as provided in paragraph BACKFILLING AND COMPACTION. When removal of unstable material is required due to the fault or neglect of the Contractor in his performance of the work, the resulting material shall be excavated and replaced by the Contractor without additional cost to the Government.

3.1.1.4 Excavation for Appurtenances

Excavation for manholes, catch-basins, inlets, or similar structures shall be of sufficient size to permit the placement and removal of forms for the full length and width of structure footings and foundations as shown. Removal of unstable material shall be as specified above. When concrete or masonry is to be placed in an excavated area, special care shall be taken not to disturb the bottom of the excavation. Excavation to the final grade level shall not be made until just before the concrete or masonry is to be placed.

3.1.1.5 Jacking, Boring, and Tunneling

Unless otherwise indicated, excavation shall be by open cut except that sections of a trench may be jacked, bored, or tunneled if, in the opinion of the Contracting Officer, the pipe, cable, or duct can be safely and properly installed and backfill can be properly compacted in such sections.

a. Where shown on Drawings and as allowed for utility crossings to minimize damage to existing utilities use augering, drilling, or jacking with casing.

b. Bore or clean out casing as augering or jacking proceeds. Installation of casing pipe through pre-bored hole after augering is complete not permitted. Removal of material from bored hole by washing, jetting, or sluicing not permitted.

c. Carefully maintain vertical and horizontal alignment.

d. Completely fill void between casing and pipe with clean sand or pea gravel.

3.1.1.6 Stockpiles

Stockpiles of satisfactory and unsatisfactory materials shall be placed and graded as specified. Stockpiles shall be kept in a neat and well drained condition, giving due consideration to drainage at all times. The ground surface at stockpile locations shall be cleared, grubbed, and sealed by rubber-tired equipment, excavated satisfactory and unsatisfactory materials shall be separately stockpiled. Stockpiles of satisfactory materials shall be protected from contamination which may destroy the quality and fitness of the stockpiled material. If the Contractor fails to protect the stockpiles, and any material becomes unsatisfactory, such material shall be removed and replaced with satisfactory material from approved sources at no additional cost to the Government. Locations of stockpiles of satisfactory materials shall be subject to prior approval of the Contracting Officer.

3.2 BACKFILLING AND COMPACTION

Backfill material shall consist of satisfactory material, select granular material, or initial backfill material as required. Backfill shall be placed in layers not exceeding 6 inches loose thickness for compaction by hand operated machine compactors, and 8 inches loose thickness for other than hand operated machines, unless otherwise specified. Each layer shall be compacted to at least 95 percent maximum density for cohesionless soils and 90 percent maximum density for cohesive soils, unless otherwise specified.

3.2.1 Trench Backfill

Trenches shall be backfilled to the grade shown. The trench shall be backfilled to 2 feet above the top of pipe prior to performing the required pressure tests. The joints and couplings shall be left uncovered during the pressure test.

3.2.1.1 Replacement of Unyielding Material

Unyielding material removed from the bottom of the trench shall be replaced with select granular material or initial backfill material.

3.2.1.2 Replacement of Unstable Material

Unstable material removed from the bottom of the trench or excavation shall be replaced with select granular material placed in layers not exceeding 6 inches loose thickness.

3.2.1.3 Bedding and Initial Backfill

Bedding shall be of the type and thickness shown. Initial backfill material shall be placed and compacted with approved tampers to a height of at least one foot above the utility pipe or conduit. The backfill shall be brought up evenly on both sides of the pipe for the full length of the pipe. Care shall be taken to ensure thorough compaction of the fill under the haunches of the pipe.

3.2.1.4 Final Backfill

The remainder of the trench, except for special materials for roadways, shall be filled with satisfactory material. Backfill material shall be placed and compacted as follows:

a. Roadways: Backfill shall be placed up to the elevation at which the requirements of Section 02210 GRADING control. Water flooding or jetting methods of compaction will not be permitted.

b. Sidewalks, Turfed or Seeded Areas and Miscellaneous Areas: Backfill shall be deposited in layers of a maximum of 12-inch loose thickness, and compacted to 85 percent maximum density for cohesive soils and 90 percent maximum density for cohesionless soils. Compaction by water flooding or jetting will not be permitted. This requirement shall also apply to all other areas not specifically designated above.

3.2.2 Backfill for Appurtenances

After the manhole, catchbasin, inlet, or similar structure has been constructed and the concrete has been allowed to cure for 3 days, backfill shall be placed in such a manner that the structure will not be damaged by the shock of falling earth. The backfill material shall be deposited and compacted as specified for final backfill, and shall be brought up evenly on all sides of the structure to prevent eccentric loading and excessive stress.

3.3 SPECIAL REQUIREMENTS

Special requirements for both excavation and backfill relating to the specific utilities are as follows:

3.3.1 Water Lines

Trenches shall be of a depth to provide a minimum cover of 30 inches from the existing ground surface, or from the indicated finished grade, whichever is lower, to the top of the pipe.

3.3.2 Electrical Distribution System

Direct burial cable and conduit or duct line shall have a minimum cover of 24 inches from the finished grade, unless otherwise indicated. Special trenching requirements for direct-burial electrical cables and conduits are specified in Section 16375 ELECTRICAL DISTRIBUTION SYSTEM, UNDERGROUND.

3.3.3 Plastic Marking Tape

Warning tapes shall be installed directly above the pipe, at a depth of 18 inches below finished grade unless otherwise shown.

3.4 TESTING

Testing shall be the responsibility of the Contractor and shall be performed at no additional cost to the Government.

3.4.1 Testing Facilities

Tests shall be performed by a Government approved commercial testing laboratory. No work requiring testing will be permitted until the

facilities have been inspected and approved by the Contracting Officer. The first inspection shall be at the expense of the Government. Cost incurred for any subsequent inspection required because of failure of the first inspection will be charged to the Contractor.

3.4.2 Testing of Backfill Materials

Characteristics of backfill materials shall be determined in accordance with particle size analysis of soils ASTM D 422 and moisture-density relations of soils ASTM D 1557. A minimum of one particle size analysis and one moisture-density relation test shall be performed on each different type of material used for bedding and backfill.

3.4.3 Field Density Tests

Tests shall be performed in sufficient numbers to ensure that the specified density is being obtained. A minimum of one field density test per lift of backfill for every 500 feet of installation shall be performed. One moisture density relationship shall be determined for every 1500 cubic yards of material used. Field in-place density shall be determined in accordance with ASTM D 1556 or ASTM D 2922. When ASTM D 2922 is used, one check test by ASTM D1556 shall be performed for every fourth test performed by the nuclear method (ASTM D2922, Method B). ASTM D 2922 results in a wet unit weight of soil and when using this method, ASTM D 3017 shall be used to determine the moisture content of the soil. The calibration curves furnished with the moisture gauges shall be checked along with density calibration checks as described in ASTM D 3017. The calibration checks of both the density and moisture gauges shall be made at the beginning of a job, on each different type of material encountered, at intervals as directed by the Contracting Officer. Copies of calibration curves, results of calibration tests, and field and laboratory density tests shall be furnished to the Contracting Officer. Trenches improperly compacted shall be reopened to the depth directed, then refilled and compacted to the density specified at no additional cost to the Government.

3.4.4 Displacement of Sewers

After other required tests have been performed and the trench backfill compacted to the finished grade surface, the pipe shall be inspected to determine whether significant displacement has occurred. This inspection shall be conducted in the presence of the Contracting Officer. Pipe sizes larger than 36 inches shall be entered and examined, while smaller diameter pipe shall be inspected by shining a light or laser between manholes or manhole locations, or by the use of television cameras passed through the pipe. If, in the judgement of the Contracting Officer, the interior of the pipe shows poor alignment or any other defects that would cause improper functioning of the system, the defects shall be remedied as directed at no additional cost to the Government.

- - o 0 o - -

SECTION 02230 - FILTER FABRIC

PART 1 GENERAL

1.1 WORK INCLUDED

1.1.1 Filter fabric for sludge drying beds.

1.1.2 Excavation, preparing surface, and installing filter fabric.

1.2 REFERENCES

The publications listed below form a part of this specification to the extent referenced. The publications are referred to in the text by basic designation only.

AMERICAN SOCIETY FOR TESTING AND MATERIALS (ASTM)

ASTM D 1777	(1975) Measuring Thickness of Textile Materials
ASTM D 3776	(1984) Tests for Weight (Mass) per Unit Area of Woven Fabric
ASTM D 3786	(1987) Test for Hydraulic Bursting Strength of Knitted Goods and Nonwoven Fabrics: Diaphragm Bursting Strength Tester Method
ASTM D 4355	(1984) Standard Test Method for Deterioration of Geotextiles from Exposure to Ultraviolet Light and Water (Xenon-Arc Type Apparatus)
ASTM D 4491	(1989) Standard Test Methods for Water Permeability of Geotextiles by Permittivity
ASTM D 4533	(1991) Standard Test Method for Trapezoid Tearing Strength of Geotextiles
ASTM D 4632	(1991) Standard Test Method for Grab Breaking Load and Elongation of Geotextiles
ASTM D 4751	(1987) Standard Test Method for Determining Apparent Opening Size of a Geotextile
ASTM D 4833	(1988) Standard Test Method for Index Puncture Resistance of Geotextiles, Geomembranes, and Related Products

1.3 SUBMITTALS

The following shall be submitted in accordance with Section 01300 - SUBMITTALS:

SD-14, Samples

Filter Fabric,

Provide two (2) 12" x 12" samples of filter fabric.

SD-17, Manufacturers Catalog Data

Product Data,

Catalog cuts, brochures, circulars, specifications and product data, and printed information in sufficient detail and scope to verify compliance with requirements of the Contract Documents.

PART 2 PRODUCTS

2.1 MATERIALS

2.1.1 Filter Fabric

Fabric shall be needlepunched nonwoven geotextile composed of polypropylene filaments which are formed into a stable network such that the filaments retain their relative position. The fabric shall be inert to biological degradation and naturally encountered chemicals, alkalies, and acids, confirming to the property values listed below:

Fabric Property	Unit	Test Method	Min. Avg. Roll Value
Weight	oz/yd^2	ASTM D-3776	4.5
Thickness	mil	ASTM D-1777	45
Grab Tensile Strength	lbs	ASTM D-4632	105
Grab Tensile Elongation	%	ASTM D-4632	50
Trapezoidal Tear Strength	lbs	ASTM D-4533	40
Mullen Burst Strength	psi	ASTM D-3786	210
Puncture Strength	lbs	ASTM D-4833	65
Apparent Opening Size	US Std. Sieve	ASTM D-4751	100
Permittivity	Sec^{-1}	ASTM D-4491	1.7
Flow Rate	gpm/ft^2	ASTM D-4491	170
UV Resistance After 500 hrs.	% Strength Retained	ASTM D-4355	70

2.1.2 Fabric specifically designed for drainage applications.

PART 3 EXECUTION

3.1 PREPARATION

3.1.1 Excavate area upon which the cloth is to be placed to conform to the lines, grades and details shown on the drawings.

3.1.2 Prepare surface to receive cloth to a condition free of obstructions, depressions, and debris.

3.2 INSTALLATION

3.2.1 Filter fabric for sludge drying beds.

3.2.1.1 Lay fabric loosely with long dimension centered over drainage trench.

3.2.1.2 Do not stretch fabric when laying

3.2.1.3 Where required splice fabric. Splices in the fabric shall provide for a minimum 12 inch overlap.

3.2.1.4 Splice fabric in accordance with manufacturer's printed instructions.

3.2.1.5 Replace and repair damaged fabric.

- - o 0 o - -

SECTION 02240 - LIME-MODIFIED SUBGRADE

PART 1 GENERAL

1.1 REFERENCES

The publications listed below form a part of this specification to the extent referenced. The publications are referred to in the text by basic designation only.

AMERICAN SOCIETY FOR TESTING AND MATERIALS (ASTM)

ASTM C 25	(1993a) Chemical Analysis of Limestone, Quicklime, and Hydrated Lime
ASTM C 50	(1986; R 1991) Sampling, Inspection, Packing, and Marking of Lime and Limestone Products
ASTM C 136	(1993) Sieve Analysis of Fine and Coarse Aggregates
ASTM D 1556	(1990) Density and Unit Weight of Soil in Place by the Sand-Cone Method
ASTM D 1557	(1991) Laboratory Compaction Characteristics of Soil Using Modified Effort (56,000 ft-lbf/cu. ft. (2,700 kN-m/cu.m.)), Procedure C.
ASTM D 1632	(1987) Making and Curing Soil-Cement Compression and Flexure Test Specimens in the Laboratory
ASTM D 1633	(1984; R 1990) Compressive Strength of Molded Soil-Cement Cylinders
ASTM D 2027	(1976; R 1992) Cutback Asphalt (Medium Curing Type)
ASTM D 2922	(1991) Density of Soil and Soil-Aggregate in Place by Nuclear Methods (Shallow Depth), Method B.
ASTM D 3017	(1988; R 1993) Water Content of Soil and Rock in Place By Nuclear Methods (Shallow Depth)
ASTM D 4318	(1993) Liquid Limit, Plastic Limit, and Plasticity Index of Soils
ASTM E 11	(1987) Wire-Cloth Sieves for Testing Purposes

1.2 DEFINITIONS

1.2.1 Lime-Modified Subgrade

Lime-modified course, as used herein, is a mixture of lime and in-place or select borrow material uniformly blended, wetted, and thoroughly compacted to produce a pavement course which meets all criteria as set forth in the plans and this specification.

1.2.2 Degree of Compaction

Degree of compaction required is expressed as a percentage of the maximum density obtained by the test procedure presented in ASTM D 1557, Procedure C, abbreviated hereinafter as percent laboratory maximum density.

1.3 GENERAL

The work specified herein consists of the construction of a lime-modified subgrade course. The work shall be performed in accordance with this specification and shall conform to the lines, grades, notes, and typical sections shown in the plans. Sources of all materials shall be selected well in advance of the time when materials will be required in the work.

1.4 SUBMITTALS

SD-01 Data

Plant, Equipment, Machines, and Tools; Mix Design.

List of proposed equipment to be used in performance of construction work including descriptive data. Mix design at least 30 days before it is to be used.

SD-09 Reports

Sampling and Testing; Field Density.

Calibration curves and related test results prior to using the device or equipment being calibrated. Copies of field test results within 24 hours after the tests are performed. Certified copies of test results of materials and sources not less than 30 days before material is required for the work.

1.5 STOCKPILING MATERIALS

Select material, including approved material available from excavation and grading, shall be stockpiled in the manner and at the locations designated. Before stockpiling material, storage sites shall be cleared and sloped to drain. Materials obtained from different sources shall be stockpiled separately.

1.6 PLANT, EQUIPMENT, MACHINES, AND TOOLS

1.6.1 General Requirements

Plant, equipment, machines, and tools used in the work shall be subject to approval and shall be maintained in satisfactory working condition at all times. Other compacting equipment may be used in lieu of that specified, where it can be demonstrated that the results are equivalent. The equipment shall be adequate and have the capability of producing the results specified in Protective equipment, apparel, and barriers shall be provided to protect the eyes, respiratory system, and the skin of workers exposed to contact with lime slurry.

1.6.2 Steel-Wheeled Rollers

Steel-wheeled rollers shall be the self-propelled type weighing not less than 9 metric tons, (10 tons,) with a minimum weight of 135 kilograms per millimeter (300 pounds per inch) width of rear wheel. Wheels of the rollers shall be equipped with adjustable scrapers. The use of vibratory rollers is optional.

1.6.3 Pneumatic-Tired Rollers

Pneumatic-tired rollers shall have four or more tires, each loaded to a minimum of 13.6 metric tons (30,000 pounds) and inflated to a minimum

pressure of 1.035 MPa. (150 psi.) The loading shall be equally distributed to all wheels, and the tires shall be uniformly inflated. Towing equipment shall also be pneumatic-tired.

1.6.4 Mechanical Spreader

Mechanical spreader shall be self-propelled or attached to a propelling unit capable of moving the spreader and material truck. The device shall be steerable and shall have variable speeds forward and reverse. The spreader and propelling unit shall be carried on tracks, rubber tires, or drum-type steel rollers that will not disturb the underlying material. The spreader shall contain a hopper, an adjustable screed, and outboard bumper rolls and be designed to have a uniform, steady flow of material from the hopper. The spreader shall be capable of laying material without segregation across the full width of the lane to a uniform thickness and to a uniform loose density so that when compacted, the layer or layers shall conform to thickness and grade requirements indicated. The Contracting Officer may require a demonstration of the spreader prior to approving use in performance of the work.

1.6.5 Sprinkling Equipment

Sprinkling equipment shall consist of tank trucks, pressure distributors, or other approved equipment designed to apply controlled quantities of water uniformly over variable widths of surface.

1.6.6 Tampers

Tampers shall be of an approved mechanical type, operated by either pneumatic pressure or internal combustion, and shall have sufficient weight and striking power to produce the compaction required.

1.6.7 Straightedge

The Contractor shall furnish and maintain at the site, in good condition, one 3.66 meter (12 foot) straightedge for each bituminous paver, for use in the testing of the finished surface. Straightedge shall be made available for Government use. Straightedges shall be constructed of aluminum or other lightweight metal and shall have blades of box or box-girder cross section with flat bottom reinforced to insure rigidity and accuracy. Straightedges shall have handles to facilitate movement on pavement.

1.7 WEATHER LIMITATIONS

Lime shall not be applied when the atmospheric temperature is less than 5 degrees C. (40 degrees F.) No lime shall be applied to soils that are frozen or contain frost, or when the underlying material is frozen. If the temperature falls below 2 degrees C, (35 degrees F,) completed lime-modified areas shall be protected against any detrimental effects of freezing.

PART 2 PRODUCTS

2.1 MATERIALS

2.1.1 Lime

Lime shall be a standard brand of hydrated lime conforming to the following physical and chemical requirements:

a. Lime shall be of such gradation that 99-1/2 percent passes a 0.850 mm (No. 20) sieve and a minimum of 85 percent passes a 0.150 mm (No. 100) sieve.

b. Combined calcium oxide and magnesium oxide shall be not less than 70 percent.

2.1.2 Bituminous Material

Material shall conform to the following:

2.1.2.1 Cutback Asphalt

ASTM D2027, Grade MC-30 or MC-70.

2.1.3 Material to be Stabilized

Material to be stabilized shall consist of in-place material in the area.

2.1.4 Water

Water shall be clean, fresh, and free from injurious amounts of oil, acid, salt, alkali, organic matter, and other substances deleterious to the lime or soil-lime mixture, and shall be subject to approval.

PART 3 EXECUTION

3.1 GENERAL REQUIREMENTS

3.1.1 Mix Design

The Contractor shall develop and submit for approval a proposed mix design prior to stabilization work. Mix shall be developed using samples of the material to be stabilized. Mix design shall be capable of producing a compressive strength of 1.035 MPa (150 psi) when compacted to the design percent of laboratory maximum density. Samples shall not show any significant loss of strength after 12 cycles of the durability test.

3.1.2 Lime-Modified Mixture

The material to be modified shall be thoroughly pulverized and, when lime is applied in the dry state, the mix should be thoroughly blended at a moisture content below optimum. After mixing is completed, the proportions of the mixture shall be in accordance with the approved mix design. After blending, water shall be blended into the dry mix in amounts necessary to bring the moisture content to optimum. Field moisture content shall be controlled within plus or minus 2 percent of optimum. When the modified course is constructed in more than one layer, the previously constructed layer shall be cleaned of loose and foreign matter by sweeping with power sweeper or power brooms except that hand brooms may be used in areas where power cleaning is not practicable. Adequate drainage shall be provided during the entire construction period to prevent water from collecting or standing on the area to be stabilized or on pulverized, mixed, or partially mixed material. Line and grade stakes shall be provided as necessary for control. Grade stakes shall be in lines parallel to the centerline of the area under construction and suitably spaced for string lining.

3.2 OPERATION OF BORROW PITS

Borrow pits shall be cleared, stripped and excavated in a manner that exposes vertical faces of the deposit for suitable working depths. Strata

of unsuitable materials overlying or occurring in the deposit shall be wasted. Methods of operating pits and the processing and blending of materials may be changed or modified if necessary to obtain material conforming to the specified requirements. Upon completion of the work, pits shall be conditioned to drain readily, and be left in a satisfactory condition.

3.3 PREPARATION OF AREA TO BE MODIFIED

The area shall be cleaned of debris. The area will be inspected for adequate compaction and shall be capable of withstanding without displacement the compaction specified for the soil-lime mixture. Debris and removed unsatisfactory in-place material shall be disposed of as specified.

3.3.1 In-Place Material to be Modified

The entire area shall be graded to conform to the lines, grades, and cross sections shown in the plans prior to being processed. Soft or yielding subgrade areas shall be made stable before construction is begun.

3.3.2 In-Place Material to Receive Modified Course

Soft, yielding areas and ruts or other irregularities in the surface shall be corrected. The material in the affected areas shall be loosened and unsatisfactory material removed. Approved select material shall be added where directed. The area shall then be shaped to line, grade, and cross section, and shall be compacted to the specified density.

3.3.3 Select Material

Sufficient select material shall be utilized to provide the required thickness of the soil-lime layer after compaction. Where in-place mixing is to be accomplished, the soil shall be graded and shaped to the approximate section and grade shown before lime modification is undertaken.

3.3.4 Grade Control

Underlying material shall be excavated to sufficient depth for the required modified-course thickness so that the finished modified course with the subsequent surface course will meet the fixed grade. Finished and completed modified area shall conform to the lines, grades, cross section, and dimensions indicated.

3.4 INSTALLATION

3.4.1 Mixed In-Place Method

3.4.1.1 Scarifying and Pulverizing of Soil

Prior to application of lime, the soil shall be scarified and pulverized to the depth shown. Scarification shall be carefully controlled so that the layer beneath the layer to be treated is not disturbed. Depth of pulverizing shall not exceed the depth of scarification.

3.4.1.2 Application of Lime

Pulverized material shall be shaped to approximately the cross section indicated. Lime shall be applied so that when uniformly mixed with the soil, the specified lime content is obtained, and a sufficient quantity of lime-modified soil is produced to construct a compacted lime-modified

course conforming to the lines, grades, and cross section indicated. Distributors shall be used in applying slurry. No equipment except that used in spreading and mixing shall pass over the freshly applied lime.

3.4.1.3 Initial Mixing

Immediately after the lime has been distributed, the lime and soil shall be mixed. Initial mixing shall be sufficient to alleviate any dusting or wetting of the lime that might occur in the event of wind or rainstorms. This may be accomplished several days in advance of the final application and mixing.

3.4.1.4 Water Application and Moist Mixing

Moisture content of the mixture will be determined in preparation for final mixing. Moisture in the mixture following final mixing shall not be less than the water content determined to be optimum based on dry weight of soil and shall not exceed the optimum water content by more than 2 percentage points. Water may be added in increments as large as the equipment will permit; however, such increment of water shall be partially incorporated in the mix to avoid concentration of water near the surface. After the last increment of water has been added, mixing shall be continued until the water is uniformly distributed throughout the full depth of the mixture. Particular care shall be taken to ensure satisfactory moisture distribution along the edges of the section.

3.4.2 Edges of Modified Course

Approved material shall be placed along the edges of the modified course in such quantity as will compact to the thickness of the course being constructed, or to the thickness of each layer in a multiple-layer course, allowing at least a 300 mm (1 foot) width of the shoulder to be rolled and compacted simultaneously with the rolling and compacting of each layer of the modified course.

3.4.3 Central-Plant Method

Plant shall be capable of producing a uniform lime-modified mixture at the specified lime and moisture contents. Mixture shall be hauled to the job in trucks equipped with protective covers. Underlying course shall be thoroughly moistened and the mixture then placed on the prepared area in a uniform layer with mechanical spreaders. The layer shall be uniform in thickness and surface contour and in such quantity that the completed layer, after compaction, will conform to the required grade and cross section.

3.4.4 Traveling-Plant Method

Traveling plant shall move at a uniform rate of speed and shall accomplish thorough mixing of the materials in one pass. Water and lime shall be delivered from supply trucks or bins at a predetermined rate. Windrows of prepared soil-lime mixture shall be of sufficient size to cover a predetermined width to the indicated compacted thickness.

3.4.5 Layer Thickness

Compacted thickness of the stabilized course shall be as indicated. No layer shall be more than 8 inches or less than 3 inches in compacted thickness.

3.4.6 Compaction

Before compaction operations are started and as a continuation of the mixing operation, the mixture shall be thoroughly loosened and pulverized to the full depth. Compaction shall be started immediately after mixing is completed. During final compaction, the surface shall be moistened, if necessary, and shaped to the required lines, grades, and cross section. Density of compacted mixture shall be at least 95 percent of laboratory maximum density. Rolling shall begin at the outside edge of the surface and proceed to the center, overlapping on successive trips at least one-half the width of the roller. Alternate trips of the roller shall be slightly different lengths. The speed of the roller at all times shall be such that displacement of the mixture does not occur. Areas inaccessible to the rollers shall be compacted with mechanical tampers, and shall be shaped and finished by hand methods.

3.4.7 Finishing

The surface of the top layer shall be finished to the grade and cross section shown. The surface shall be of uniform texture. Light blading during rolling may be necessary for the finished surface to conform to the lines, grades, and cross sections. Should the surface for any reason become rough, corrugated, uneven in texture, or traffic-marked prior to completion, such unsatisfactory portions shall be scarified, reworked, relaid, or replaced as directed. Should any portion of the course, when laid, become watersoaked for any reason, that portion shall be removed immediately, and the mix placed in a windrow and aerated until a moisture content within the limits specified is obtained, and then spread, shaped, and rolled as specified above.

3.4.8 Construction Joints

At the end of each phase of construction, a straight transverse construction joint shall be formed by cutting back into the completed work to form a true vertical face free of loose or shattered material. Material along construction joints not properly compacted shall be removed and replaced with soil-lime mixture that is mixed, moistened, and compacted as specified.

3.4.9 Curing and Protection

Immediately after the soil-lime area has been finished as specified above, the surface shall be protected against rapid drying for 7 days.

3.4.9.1 Moist Curing

The area shall be moistened by sprinkling and shall be kept moist for the 7-day curing period.

3.4.9.2 Bituminous Material

Bituminous material shall be uniformly applied by means of a bituminous distributor within a temperature range of 29-87 degrees C (85-190 degrees F) for Grade MC-30 and 50-107 degrees C for Grade MC-70 (120-225 degrees F). Bituminous material shall be applied in quantities of not less than 0.45 liters per square meter (0.1 gallon per square yard) nor more than 1.13 liters per square meter (0.25 gallon per square yard). Areas inaccessible to or missed by the distributor shall be properly treated using the manually operated hose attachment. Bituminous material shall be applied only to the top layer. At the time the bituminous material is applied, the surface of the area shall be free of loose or foreign matter

and shall contain sufficient moisture to prevent excessive penetration of the bituminous material. When necessary, the area shall be sprinkled immediately before the bituminous material is applied. Treated surface shall be sanded or dusted to prevent the bituminous material from being picked up by traffic.

3.5 SAMPLING AND TESTING

3.5.1 General Requirements

Sampling and testing shall be performed by a Government approved commercial testing laboratory. No work requiring testing will be permitted until the facilities have been inspected and approved. The first inspection shall be at the expense of the Government. Cost incurred for any subsequent inspection required because of failure of the facilities to pass the first inspection will be charged to the Contractor. Tests shall be performed in sufficient numbers and at the locations and times directed to insure that materials and compaction meet specified requirements. Certified copies of the test results shall be furnished to the Contracting Officer.

3.5.2 Results

Results shall verify that the material complies with the specification. When deficiencies are found, the initial analysis shall be repeated and the material already placed shall be retested to determine the extent of unacceptable material. All in-place unacceptable material shall be replaced.

3.5.3 Sampling

Samples of lime shall be taken in accordance with ASTM C 50. Specimens for the unconfined compression tests shall be prepared in accordance with ASTM D 1632.

3.5.4 Sieve Analysis

Before starting work, one sample of material to be stabilized shall be tested in accordance with ASTM C 136 and ASTM D 422 on sieves conforming to ASTM E 11. After the initial test, a minimum of one analysis shall be performed for each 1000 tons of material placed, with a minimum of three analyses for each day's run until the course is completed.

3.5.5 Liquid Limit and Plasticity Index

One liquid limit and plasticity index shall be performed for each sieve analysis. Liquid limit and plasticity index shall be in accordance with ASTM D 4318.

3.5.6 Chemical Analysis

Lime shall be tested for the specified chemical requirements in accordance with ASTM C 25. Three tests shall be conducted for each delivery of lime.

3.5.7 Testing

Unconfined compression tests shall be conducted in accordance with ASTM D 1633. Three tests shall be conducted for each mix design tested. Samples shall be cured at a constant moisture content and temperature for 28 days.

3.6 FIELD QUALITY CONTROL

3.6.1 General

Tests shall provide a moisture-density relationship for the lime-soil mixture. Results of field quality control testing shall verify that materials comply with this specification. When deficiencies are found, the initial analysis shall be repeated and the material already placed shall be retested to determine the extent of unacceptable material. All in-place unacceptable material shall be replaced or repaired, as directed by the Contracting Officer, at no additional cost to the Government.

3.6.2 Thickness Control

Completed thicknesses of the modified course shall be within 1/2 inch of the thickness indicated. Where the measured thickness of the modified course is more than 1/2 inch deficient, such areas shall be corrected by scarifying, adding mixture of proper gradation, reblading, and recompacting as directed. Where the measured thickness of the modified course is more than 1/2 inch thicker than indicated, it shall be considered as conforming to the specified thickness requirement. Average job thickness shall be the average of all thickness measurements taken for the job, but shall be within 1/4 inch of the thickness indicated. Thickness of the stabilized course shall be measured at intervals in such a manner as to ensure one measurement for each 500 square yards of stabilized course. Measurements shall be made in 3 inch diameter test holes penetrating the modified course.

3.6.3 Field Density

Field in-place density shall be determined in accordance with ASTM D 2922. ASTM D 2922 results in a wet unit weight of soil and when using this method, ASTM D 3017 shall be used to determine the moisture content of the soil. The calibration curves furnished with the moisture gauges shall be checked along with density calibration checks as described in ASTM D 3017. If ASTM D 2922 is used, in-place densities shall be checked by ASTM D 1556 at least once per lift for each 1000 square yard of stabilized material. Calibration curves and calibration tests results shall be furnished to the Contracting Officer within 24 hours of conclusion of the tests. At least one field density test shall be performed for each 500 square yards of each layer of base material.

3.7 TRAFFIC

Completed portions of the lime-modified soil area may be opened immediately to light traffic provided the curing is not impaired. After the curing period has elapsed, completed areas may be opened to all traffic, provided the modified course has hardened sufficiently to prevent marring or distorting of the surface by equipment or traffic. Heavy equipment shall not be permitted on the area during the curing period. Lime and water may be hauled over the completed area with pneumatic-tired equipment if approved. Finished portions of lime-modified soil that are traveled on by equipment used in constructing an adjoining section shall be protected in a manner to prevent equipment from marring or damaging completed work.

3.8 MAINTENANCE

Modified area shall be maintained in a satisfactory condition until the completed work is accepted. Maintenance shall include immediate repairs of any defects and shall be repeated as often as necessary to keep the area intact. Defects shall be corrected as specified herein.

3.9 DISPOSAL OF UNSATISFACTORY MATERIALS

Removed in-place materials that are unsuitable for modification, material that is removed for the required correction of defective areas, waste material, and debris shall be disposed of as directed.

- - o 0 o - -

SECTION 02241 - STABILIZED AGGREGATE BASE COURSE

PART 1 GENERAL

1.1 REFERENCES

The publications listed below form a part of this specification to the extent referenced. The publications are referred to in the text by basic designation only.

AMERICAN SOCIETY FOR TESTING AND MATERIALS (ASTM)

ASTM C 29	(1991a) Unit Weight and Voids in Aggregate
ASTM C 127	(1988) Specific Gravity and Absorption of Course Aggregate
ASTM C 128	(1988) Specific Gravity and Absorption of Fine Aggregate
ASTM C 131	(1989) Resistance to Degradation of Small-Size Coarse Aggregate by Abrasion and Impact in the Los Angeles Machine
ASTM C 136	(1992) Sieve Analysis of Fine and Coarse Aggregates
ASTM D 75	(1987; R 1992) Sampling Aggregates
ASTM D 422	(1963; R 1990) Particle-Size Analysis of Soils
ASTM D 1556	(1990) Density and Unit Weight of Soil in Place by the Sand-Cone Method
ASTM D 1557	(1991) Laboratory Compaction Characteristics of Soil Using Modified Effort (56,000 ft-lbf/cu. ft. (2,700 kN-m/cu. m.)),Procedure C
ASTM D 2922	(1991) Density of Soil and Soil-Aggregate in Place by Nuclear Methods (Shallow Depth), Method B.
ASTM D 3017	(1988) Water Content of Soil and Rock in Place by Nuclear Methods (Shallow Depth)
ASTM D 4318	(1984) Liquid Limit, Plastic Limit, and Plasticity Index of Soils
ASTM E 11	(1987) Wire-Cloth Sieves for Testing Purposes

NEW MEXICO STATE HIGHWAY AND TRANSPORTATION DEPARTMENT STANDARD SPECIFICATIONS: (NMSHTD)

NMSHTD-01	(1994) Standard Specifications for Highway and Bridge Construction.

TEXAS STATE DEPARTMENT OF HIGHWAYS AND PUBLIC TRANSPORTATION STANDARD SPECIFICATIONS: (TSDHPT)

TSDHPT-01 (1982) Standard Specifications for Construction of Highways, Streets and Bridges.

1.2 DEFINITIONS

1.2.1 Aggregate Base

Aggregate base as used herein is well graded, durable aggregate uniformly moistened and mechanically stabilized by compaction.

1.2.2 Degree of Compaction

Degree of compaction required is expressed as a percentage of the maximum density obtained by the test procedure presented in ASTM D 1557 Procedure C abbreviated hereinafter as percent laboratory maximum density.

1.3 GENERAL

The work specified herein consists of the construction of an aggregate base course. The work shall be performed in accordance with this specification and shall conform to the lines, grades, notes and typical sections shown in the plans. Sources of all materials shall be selected well in advance of the time that materials will be required in the work.

1.4 SUBMITTALS

The following shall be submitted in accordance with Section 01300 SUBMITTALS:

SD-09 Reports

Sampling and Testing

Field Density

Calibration curves and related test results prior to using the device or equipment being calibrated. Copies of field test results within 24 hours after the tests are performed. Certified copies of test results for approval not less than 30 days before material is required for the work.

1.4 WEATHER LIMITATIONS

Base shall not be constructed when the atmospheric temperature is less than 2 degrees C. (35 degrees F.) Base shall not be constructed on subgrades that are frozen or contain frost. If the temperature falls below 2 degrees C, (35 degrees F,) completed areas shall be protected against any detrimental effects of freezing.

1.5 PLANT, EQUIPMENT, MACHINES, AND TOOLS

1.5.1 General Requirements

Plant, equipment, machines, and tools used in the work shall be subject to approval and shall be maintained in satisfactory working condition at all times. Other compacting equipment may be used in lieu of that specified, where it can be demonstrated that the results are equivalent. The equipment shall be adequate and have the capability of producing the results specified.

1.5.2 Steel-Wheeled Rollers

Steel-wheeled rollers shall be the self-propelled type weighing not less than 9 metric tons, (10 tons,) with a minimum weight of 135 kilograms per millimeter (300 pounds per inch) width of rear wheel. Wheels of the rollers shall be equipped with adjustable scrapers. The use of vibratory rollers is optional.

1.5.3 Pneumatic-Tired Rollers

Pneumatic-tired rollers shall have four or more tires, each loaded to a minimum of 13,600 kilograms (30,000 pounds) and inflated to a minimum pressure of 1035 kPa. (150 psi.) The loading shall be equally distributed to all wheels, and the tires shall be uniformly inflated. Towing equipment shall also be pneumatic-tired.

1.5.4 Mechanical Spreader

Mechanical spreader shall be self-propelled or attached to a propelling unit capable of moving the spreader and material truck. The device shall be steerable and shall have variable speeds forward and reverse. The spreader and propelling unit shall be carried on tracks, rubber tires, or drum-type steel rollers that will not disturb the underlying material. The spreader shall contain a hopper, an adjustable screen, and outboard bumper rolls and be designed to have a uniform, steady flow of material from the hopper. The spreader shall be capable of laying material without segregation across the full width of the lane to a uniform thickness and to a uniform loose density so that when compacted, the layer or layers shall conform to thickness and grade requirements indicated. The Contracting officer may require a demonstration of the spreader prior to approving use in performance of the work.

1.5.5 Sprinkling Equipment

Sprinkling equipment shall consist of tank trucks, pressure distributors, or other approved equipment designed to apply controlled quantities of water uniformly over variable widths of surface.

1.5.6 Tampers

Tampers shall be of an approved mechanical type, operated by either pneumatic pressure or internal combustion, and shall have sufficient weight and striking power to produce the compaction required.

1.5.7 Straightedge

The Contractor shall furnish and maintain at the site, in good condition, one 3.66 meter (12 foot) straightedge for each bituminous paver, for use in the testing of the finished surface. Straightedge shall be made available for Government use.

Straightedges shall be constructed of aluminum or other lightweight metal and shall have blades of box or box-girder cross section with flat bottom reinforced to insure rigidity and accuracy. Straightedges shall have handles to facilitate movement on pavement.

1.6 STOCKPILING MATERIALS

Materials, including approved material available from excavation and grading, shall be stockpiled in the manner and at locations designated. Before stockpiling of material, storage sites shall be cleared, and sloped to drain. Materials obtained from different sources shall be stockpiled separately.

1.7 SAMPLING AND TESTING

1.7.1 General Requirements

Sampling and testing shall be performed by a Government approved testing laboratory. No work requiring testing shall be permitted until the facilities have been inspected and approved. The first inspection shall be at the expense of the Government. Cost incurred for any subsequent inspection required because of failure of the facilities to pass the first inspection will be charged to the Contractor. Tests shall be performed in sufficient numbers and at the locations and times directed to insure that materials and compaction meet specified requirements. Copies of test results shall be furnished to the Contracting Officer within 24 hours of completion of tests.

1.7.2 Test Results

Results shall verify that materials comply with this specification. When a material source is changed, the new material will be tested for compliance. When deficiencies are found, the initial analysis shall be repeated and the material already placed shall be retested to determine the extent of unacceptable material. All in-place unacceptable material shall be replaced or modified as directed by the Contracting Officer.

1.7.3 Sampling

Aggregate samples for laboratory tests shall be taken in accordance with ASTM D 75.

1.7.4 Sieve Analysis

Before starting work, at least one sample of material shall be tested in accordance with ASTM C 136 and ASTM D 422 on sieves conforming to ASTM E 11. After the initial test, a minimum of one analysis shall be performed for each 1000 metric tons (1000 tons) of material placed, with a minimum of three analyses for each day's run until the course is completed.

1.7.5 Liquid Limit and Plasticity Index

One liquid limit and plasticity index shall be performed for each sieve analysis. Liquid limit and plasticity index shall be in accordance with ASTM D 4318.

1.7.6 Laboratory Density

Tests shall provide a moisture-density relationship for the aggregate. Tests shall be conducted in accordance with ASTM D 1557.

1.7.7 Wear Tests

Wear tests shall be performed in accordance with ASTM C 131. A minimum of one test per aggregate source shall be run.

PART 2 PRODUCTS

2.1 MATERIALS

2.1.1 Aggregates

Aggregates shall consist of crushed stone crushed gravel, angular sand, or other approved material. Aggregates shall be durable and sound, free from lumps of clay, organic matter, objectionable coatings, and other foreign

material. Material retained on a 4.75 mm (No. 4) sieve shall be known as coarse aggregate and that passing the 4.75 mm (No. 4) sieve shall be known as binder material. Caliche is not an approved material for base course.

2.1.1.1 Coarse Aggregate

Only one type of coarse aggregate shall be used on the project. Coarse aggregates, consisting of angular fragments of uniform density and quality, shall have a percentage of wear not to exceed 50 percent after 500 revolutions when tested in accordance with ASTM C 131. The amount of flat and elongated particles shall not exceed 30 percent. A flat particle is one having a ratio of width to thickness greater than 3, and an elongated particle is one having a ratio of length to width greater than 3.

a. Crushed Gravel: Crushed gravel shall be manufactured from gravel particles 50 percent of which by weight are retained on the maximum size gradation sieve specified.

b. Crushed Stone: Crushed stone retained on each sieve specified shall contain at least 50 percent by weight of crushed pieces having two or more freshly fractured faces with the area of each face being at least equal to 75 percent of the smallest midsectional area of the piece. When two fractures are adjacent, the angle between the planes of the fractures must be at least 30 degrees to count as two fractured faces.

2.1.2 Binder Material

Binder material shall consist of screenings, angular sand, or other finely divided mineral matter processed or naturally combined with the coarse aggregate. Liquid-limit and plasticity-index requirements shall apply to any component that is blended to meet the required gradation and shall also apply to the completed course. The portion of any component or of the completed course passing the 0.425 mm (No. 40) sieve shall be either nonplastic or have a liquid limit not greater than 25 and a plasticity index not greater than 5.

2.1.3 Gradation

Gradation shall conform to the requirements of NMSHTD-01 for "Base Course and Subbase", Section 304, Class I; or shall conform to the requirements of TSDHPT-01 Specifications, Item 248, Type A, Grade I. Percentage passing the No. 200 sieve shall be between 0 and 5 percent.

PART 3 EXECUTION

3.1 GENERAL REQUIREMENTS

When the base is constructed in more than one layer, the previously constructed layer shall be cleaned of loose and foreign matter by sweeping with power sweepers or power brooms, except that hand brooms may be used in areas where power cleaning is not practicable. Adequate drainage shall be provided during the entire period of construction to prevent water from collecting or standing on the working area. Line and grade stakes shall be provided as necessary for control. Grade stakes shall be in lines parallel to the centerline of the area under construction and suitably spaced for string lining.

3.2 OPERATION OF AGGREGATE SOURCES

Aggregates shall be obtained from off-site sources.

3.3 PREPARATION OF UNDERLYING COURSE

3.3.1 General Requirements

Before constructing aggregate base course, the previously constructed underlying course shall be cleaned of foreign substances. Surface of underlying course shall meet the specified compaction and surface tolerances. Subgrade shall conform to Section 02210 GRADING. Ruts or soft, yielding spots that may appear in the underlying course, areas having inadequate compaction, and deviations of the surface from requirements specified shall be corrected. For cohesionless underlying materials containing sands, sand gravels, or any other cohesionless material in harmful quantities, the surface shall be mechanically stabilized with aggregate prior to placement of the aggregate course. Stabilization may be accomplished by mixing base course material into the underlying course and compacting by approved methods. Properly compacted material will be considered as part of the underlying course and shall meet all requirements for the underlying course. Finished underlying course shall not be disturbed by traffic or other operations and shall be maintained in a satisfactory condition until base course is placed.

3.3.2 Grade Control

Underlying material shall be excavated to sufficient depth for the required base course thickness so that the finished base course with the subsequent surface course will meet the fixed grade. Finished and completed area shall conform to the lines, grades, cross section, and dimensions indicated.

3.4 INSTALLATION

3.4.1 Mixing and Placing

Materials shall be mixed by the stationary plant, traveling plant, or road mix method and placed in such a manner as to obtain uniformity of the aggregate base course material and at a uniform optimum water content for compaction. The Contractor shall make such adjustments in mixing or placing procedures or in equipment to obtain the true grades, to minimize segregation and degradation, to reduce or accelerate loss or increase of water, and to ensure a satisfactory base course.

3.4.2 Edges of Base Course

Approved material shall be placed along edges of aggregate base course in such quantities as will compact to thickness of the course being constructed, or to the thickness of each layer in a multiple layer course, allowing in each operation at least a 300 mm (1-foot) width of the shoulder to be rolled and compacted simultaneously with rolling and compacting of each layer of base course.

3.4.3 Compaction

Each layer of aggregate base course including shoulders shall be compacted. Water content shall be maintained at optimum. Density of compacted mixture shall be as shown on the drawings. Rolling shall begin at the outside edge of the surface and proceed to the center, overlapping on successive trips at least one-half the width of the roller. Alternate trips of the roller shall be slightly different lengths. Speed of the roller shall be such that displacement of the aggregate does not occur. Areas inaccessible to the rollers shall be compacted with mechanical tampers, and shall be shaped and finished by hand methods.

3.4.4 Layer Thickness

Compacted thickness of the aggregate course shall be as shown on drawings. No layer shall be in excess of 200 mm (8 inches) nor less than 75 mm (3 inches) in compacted thickness.

3.4.5 Finishing

The surface of the top layer shall be finished to grade and cross section shown. Finished surface shall be of uniform texture. Light blading during compaction may be necessary for the finished surface to conform to the lines, grades, and cross sections. Should the surface for any reason become rough, corrugated, uneven in texture, or traffic marked prior to completion, such unsatisfactory portion shall be scarified, reworked, recompacted, or replaced as directed.

3.4.5.1 Smoothness

Surface of each layer shall show no deviations in excess of 9.5 mm (3/8 inch) when tested with the 3.66 meter (12 foot) straightedge. Deviations exceeding this amount shall be corrected by removing material and replacing with new material, or by reworking existing material and compacting, as directed.

3.4.5.2 Thickness Control

Compacted thickness of the base course shall be within 12.7 mm (1/2 inch) of the thickness indicated. Where the measured thickness is more than 12.7 mm (1/2 inch) deficient, such areas shall be corrected by scarifying, adding new material of proper gradation, reblading, and recompacting as directed. Where the measured thickness is more than 12.7 mm (1/2 inch) thicker than indicated, the course shall be considered as conforming to the specified thickness requirements. Average job thickness shall be the average of all thickness measurements taken for the job, but shall be within 6.4 mm (1/4 inch) of the thickness indicated.

3.5 FIELD QUALITY CONTROL

3.5.1 Field Density

Field in-place density shall be determined in accordance with ASTM D 1556 or ASTM D 2922. When ASTM D 2922 is used, one check test by ASTM D 1556 shall be performed for every fourth test performed by the nuclear method (ASTM D 2922, Method B). ASTM D 2922 results in a wet unit weight of soil, and when using this method, ASTM D 3017 shall be used to determine the moisture content of the soil. The calibration curves furnished with the moisture gauges shall be checked along with density calibration checks as described in ASTM D 3017. If ASTM D 2922 is used, in-place densities shall be checked by ASTM D 1556 for every fourth test performed by the Nuclear Method (ASTM D 2922, Method B). Calibration curves and calibration test results shall be furnished within 24 hours of the conclusion of the tests. At least one field density test shall be performed for each 500 square meters of each layer of base material.

3.5.2 Smoothness

Measurements for deviation from grade and cross section shown shall be taken in successive positions parallel to the road centerline with a 3.66 meter (or 12 foot) straightedge.

Measurements shall also be taken perpendicular to the road centerline at 15 meter (50 foot) intervals.

3.5.3 Thickness

Thickness of the base course shall be measured at intervals in such a manner as to ensure one measurement for each 500 square yards of base course. Measurements shall be made in 76.2 mm (3-inch) diameter test holes penetrating the base course.

3.6 TRAFFIC

Completed portions of the area may be opened to traffic, provided there is no marring or distorting of the surface by the traffic. Heavy equipment shall not be permitted except when necessary to construction, and then the area shall be protected against marring or damage to the completed work.

3.7 MAINTENANCE

The aggregate base course shall be maintained in a satisfactory condition until accepted. Maintenance shall include immediate repairs to any defects and shall be repeated as often as necessary to keep the area intact.

3.8 DISPOSAL OF UNSATISFACTORY MATERIALS

Removed in-place materials that are unsuitable for the base course material that is removed for the required correction of defective areas, and waste material and debris shall be disposed of outside the limits of Government controlled land and at the Contractor's responsibility.

- - o 0 o - -

SECTION 02511 - CONCRETE SIDEWALKS AND CURBS AND GUTTERS

PART 1 - GENERAL

1.1 REFERENCES

The publications listed below form a part of this specification to the extent referenced. The publications are referred to in the text by basic designation only.

AMERICAN SOCIETY FOR TESTING AND MATERIALS (ASTM)

ASTM A 185	(1990a) Steel Welded Wire Fabric, Plain, for Concrete Reinforcement
ASTM A 615	(1990) Deformed and Plain Billet-Steel Bars for Concrete Reinforcement
ASTM A 616	(1990) Rail-Steel Deformed and Plain Bars for Concrete Reinforcement
ASTM A 617	(1990) Axle-Steel Deformed and Plain Bars for Concrete Reinforcement
ASTM C 31	(1990a) Making and Curing Concrete Test Specimens in the Field
ASTM C 143	(1990a) Slump of Hydraulic Cement Concrete
ASTM C 171	(1991) Sheet Materials for Curing Concrete
ASTM C 172	(1990) Sampling Freshly Mixed Concrete
ASTM C 173	(1978) Air Content of Freshly Mixed Concrete by the Volumetric Method
ASTM C 231	(1991) Air Content of Freshly Mixed Concrete by the Pressure Method
ASTM C 309	(1989) Liquid Membrane-Forming Compounds for Curing Concrete
ASTM D 1751	(1983; R 1991) Preformed Expansion Joint Filler for Concrete Paving and Structural Construction (Nonextruding and Resilient Bituminous Types)
ASTM D 1752	(1984) Preformed Sponge Rubber and Cork Expansion Joint Fillers for Concrete Paving and Structural Construction

CORPS OF ENGINEERS (COE)

COE CRD-C 527	(1988) Standard Specification for Joint Sealants, Cold-Applied, Non-Jet-Fuel-Resistant, for Rigid and Flexible Pavements

FEDERAL SPECIFICATIONS (FS)

FS CCC-C-467	(Rev C; Notice 1) Cloth, Burlap, Jute (or Kenaf)
FS SS-S-1401	(Rev C; Notice 1) Sealant, Joint, Non-Jet-Fuel-Resistant, Hot-Applied, for Portland Cement and Asphalt Concrete Pavements

1.2 SUBMITTALS

The following shall be submitted in accordance with Section 01300 - SUBMITTALS:

SD-09 Reports

Field Quality Control.

Copies of all test reports within 24 hours of completion of the test.

SD-18 Records

Concrete.

Copies of certified delivery tickets for all concrete used in the construction.

1.3 WEATHER LIMITATIONS

1.3.1 Placing During Cold Weather

Concrete placement shall be discontinued when the air temperature reaches 40 degrees F and is falling. Placement may begin when the air temperature reaches 35 degrees F and is rising. Provisions shall be made to protect the concrete from freezing during the specified curing period. If necessary to place concrete when the temperature of the air, aggregates, or water is below 35 degrees F, placement shall be approved in writing. Approval shall be contingent upon full conformance with the following provisions. The underlying material shall be prepared and protected so that it is entirely free of frost when the concrete is deposited. Mixing water and/or aggregates shall be heated as necessary to result in the temperature of the in-place concrete being between 50 and 85 degrees F. Methods and equipment for heating shall be approved. The aggregates shall be free of ice, snow, and frozen lumps before entering the mixer. Covering and other means shall be provided for maintaining the concrete at a temperature of at least 50 degrees F for not less than 72 hours after placing, and at a temperature above freezing for the remainder of the curing period.

1.3.2 Placing During Warm Weather

The temperature of the concrete as placed shall not exceed 85 degrees F except where an approved retarder is used. The mixing water and/or aggregates shall be cooled, if necessary, to maintain a satisfactory placing temperature. In no case shall the placing temperature exceed 95 degrees F.

1.4 PLANT, EQUIPMENT, MACHINES, AND TOOLS

1.4.1 General Requirements

Plant, equipment, machines, and tools used in the work shall be subject to approval and shall be maintained in a satisfactory working condition at all times. The equipment shall have the capability of producing the required product, meeting grade controls, thickness control and smoothness requirements as specified. Use of the equipment shall be discontinued if it produces unsatisfactory results. The Contracting Officer shall have access at all times to the plant and equipment to ensure proper operation and compliance with specifications.

1.4.2 Slip Form Equipment

Slip form paver or curb forming machine, will be approved based on trial use on the job and shall be self-propelled, automatically controlled, crawler mounted, and capable of spreading, consolidating, and shaping the plastic concrete to the desired cross section in one pass.

PART 2 - PRODUCTS

2.1 CONCRETE

Concrete shall conform to the applicable requirements of Section 03300 CONCRETE FOR BUILDING CONSTRUCTION except as otherwise specified. Concrete shall have a minimum compressive strength of 3500 psi at 28 days. Maximum size of aggregate shall be 1-1/2 inches.

2.1.1 Air Content

Mixtures shall have air content by volume of concrete of 5 to 7 percent, based on measurements made immediately after discharge from the mixer.

2.1.2 Slump

The concrete slump shall be 2 inches plus or minus 1 inch where determined in accordance with ASTM C 143.

2.1.3 Reinforcement Steel

Reinforcement bars shall conform to ASTM A 615, ASTM A 616, or ASTM A 617. Wire mesh reinforcement shall conform to ASTM A 185.

2.2 CONCRETE CURING MATERIALS

2.2.1 Impervious Sheet Materials

Impervious sheet materials shall conform to ASTM C 171, type optional, except that polyethylene film, if used, shall be white opaque.

2.2.2 Burlap

Burlap shall conform to FS CCC-C-467.

2.2.3 White Pigmented Membrane-Forming Curing Compound

White pigmented membrane-forming curing compound shall conform to ASTM C 309, Type 2.

2.3 CONCRETE PROTECTION MATERIALS

Concrete protection materials shall be a linseed oil mixture of equal parts, by volume, of linseed oil and either mineral spirits, naphtha, or turpentine. At the option of the contractor, commercially prepared linseed oil mixtures, formulated specifically for application to concrete to provide protection against the action of deicing chemicals may be used, except that emulsified mixtures are not acceptable.

2.4 JOINT FILLER STRIPS

2.4.1 Contraction Joint Filler for Curb and Gutter

Contraction joint filler for curb and gutter shall consist of hard-pressed fiberboard.

2.4.2 Expansion Joint Filler, Premolded

Expansion joint filler, premolded, shall conform to ASTM D 1751 or ASTM D 1752, 3/8-inch thick, unless otherwise indicated.

2.5 JOINT SEALANTS

2.5.1 Joint Sealant, Cold-Applied

Joint sealant, cold-applied shall conform to COE CRD-C 527.

2.5.2 Joint Sealant, Hot-Poured

Joint sealant, hot-poured shall conform to FS SS-S-1401.

2.6 FORM WORK

Form work shall be designed and constructed to insure that the finished concrete will conform accurately to the indicated dimensions, lines, and elevations, and within the tolerances specified. Forms shall be of wood or steel, straight, of sufficient strength to resist springing during depositing and consolidating concrete. Wood forms shall be surfaced plank, 2-inch nominal thickness, straight and free from warp, twist, loose knots, splits or other defects. Wood forms shall have a nominal length of 10 feet. Radius bends may be formed with 3/4-inch boards, laminated to the required thickness. Steel forms shall be channel-formed sections with a flat top surface and with welded braces at each end and at not less than two intermediate points. Ends of steel forms shall be interlocking and self-aligning. Steel forms shall include flexible forms for radius forming, corner forms, form spreaders, and fillers. Steel forms shall have a nominal length of 10 feet with a minimum of two welded stake pockets per form. Stake pins shall be solid steel rods with chamfered heads and pointed tips designed for use with steel forms.

2.6.1 Sidewalk Forms

Sidewalk forms shall be of a height equal to the full depth of the finished sidewalk.

2.6.2 Header Curb and Curb and Gutter Forms

Curb and gutter outside forms shall have a height equal to the full depth of the curb or gutter. The inside form of curb shall have batter as indicated and shall be securely fastened to and supported by the outside form. Rigid forms shall be provided for curb returns, except that benders or thin plank forms may be used for curb or curb returns with a radius of

10 feet or more, where grade changes occur in the return, or where the central angle is such that a rigid form with a central angle of 90 degrees cannot be used. Back forms for curb returns may be made of 1-1/2 inch benders, for the full height of the curb, cleated together.

PART 3 - EXECUTION

3.1 SUBGRADE PREPARATION

The subgrade shall be constructed to the specified grade and cross section prior to concrete placement. Subgrade shall be placed and compacted to conform with applicable requirements of Section 02210 GRADING.

3.1.1 Sidewalk Subgrade

The subgrade shall be tested for grade and cross section with a template extending the full width of the sidewalk and supported between side forms.

3.1.2 Curb and Gutter Subgrade

The subgrade shall be tested for grade and cross section by means of a template extending the full width of the curb and gutter. The subgrade shall be of materials equal in bearing quality to the subgrade under the adjacent pavement.

3.1.3 Maintenance of Subgrade

The subgrade shall be maintained in a smooth, compacted condition in conformity with the required section and established grade until the concrete is placed. The subgrade shall be in a moist condition when concrete is placed. The subgrade shall be prepared and protected so as to produce a subgrade free from frost when the concrete is deposited.

3.2 FORM SETTING

Forms shall be carefully set to the indicated alignment, grade and dimensions. Forms shall be held rigidly in place by a minimum of three stakes per form placed at intervals not to exceed 4 feet. Corners, deep sections, and radius bends shall have additional stakes and braces, as required. Clamps, spreaders, and braces shall be used where required to insure rigidity in the forms. Forms shall be removed without injuring the concrete. Bars or heavy tools shall not be used against the concrete in removing the forms. Any concrete found defective after form removal shall be promptly and satisfactorily repaired. Forms shall be cleaned and coated with form oil each time before concrete is placed. Wood forms may, instead, be thoroughly wetted with water before concrete is placed, except that with probable freezing temperatures, oiling is mandatory.

3.2.1 Sidewalks

Forms for sidewalks shall be set with the upper edge true to line and grade with an allowable tolerance of 1/8 inch in any 10-foot long section. After forms are set, grade and alignment shall be checked with a 10-foot straightedge. Forms shall have a transverse slope as indicated with the low side adjacent to the roadway. Side forms shall not be removed for 12 hours after finishing has been completed.

3.2.2 Curbs and Gutters

The forms of the front of the curb shall be removed not less than 2 hours nor more than 6 hours after the concrete has been placed. Forms back of curb shall remain in place until the face and top of the curb have been

finished as specified for concrete finishing. Gutter forms shall not be removed while the concrete is sufficiently plastic to slump in any direction.

3.3 SIDEWALK CONCRETE PLACEMENT AND FINISHING

3.3.1 Formed Sidewalks

Concrete shall be placed in the forms in one layer of such thickness that when consolidated and finished the sidewalks will be of the thickness indicated. After concrete has been placed in the forms, a strike-off guided by side forms shall be used to bring the surface to proper section to be compacted. The concrete shall be consolidated with an approved vibrator, and the surface shall be finished to grade with a wood float, bull float, or darby, edged and broom finished.

3.3.2 Concrete Finishing

After straightedging, when most of the water sheen has disappeared, and just before the concrete hardens, the surface shall be finished to a smooth and uniformly fine granular or sandy texture free of waves, irregularities, or tool marks. A scored surface shall be produced by brooming with a fiber-bristle brush in a direction transverse to that of the traffic.

3.3.3 Edge and Joint Finishing

All slab edges, including those at formed joints, shall be finished carefully with an edger having a radius of 1/8 inch. Transverse joint shall be edged before brooming, and the brooming shall eliminate the flat surface left by the surface face of the edger. Corners and edges which have crumbled and areas which lack sufficient mortar for proper finishing shall be cleaned and filled solidly with a properly proportioned mortar mixture and then finished.

3.3.4 Surface and Thickness Tolerances

Finished surfaces shall not vary more than 5/16 inch from the testing edge of a 10-foot straightedge. Permissible deficiency in section thickness will be up to 0.25 inch.

3.4 CURB AND GUTTER CONCRETE PLACEMENT AND FINISHING

3.4.1 Formed Curb and Gutter

Concrete shall be placed to the section required in a single lift. Consolidation shall be achieved by using approved mechanical vibrators.

3.4.2 Concrete Finishing

Exposed surfaces shall be floated and finished with a smooth wood float until true to grade and section and uniform in texture. Floated surfaces shall then be brushed with a fine-hair brush with longitudinal strokes. The edges of the gutter and top of the curb shall be rounded with an edging tool to a radius of 1/2 inch. Immediately after removing the front curb form, the face of the curb shall be rubbed with a wood or concrete rubbing block and water until blemishes, form marks, and tool marks have been removed. The front curb surface, while still wet, shall be brushed in the same manner as the gutter and curb top. The top surface of gutter and entrance shall be finished to grade with a wood float.

3.4.3 Joint Finishing

Curb edges at formed joints shall be finished as indicated.

3.4.4 Surface and Thickness Tolerances

Finished surfaces shall not vary more than 1/4 inch from the testing edge of a 10-foot straightedge. Permissible deficiency in section thickness will be up to 0.25 inch.

3.5 SIDEWALK JOINTS

Sidewalk joints shall be constructed to divide the surface into rectangular areas. Transverse contraction joints shall be spaced at a distance equal to the sidewalk width or 5 feet on centers, whichever is less, and shall be continuous across the slab. Longitudinal contraction joints shall be constructed along the centerline of all sidewalks 10 feet or more in width. Transverse expansion joints shall be installed at sidewalk returns and opposite expansion joints in adjoining curbs. Where the sidewalk is not in contact with the curb, transverse expansion joints shall be installed as indicated. Expansion joints shall be formed about structures and features which project through or into the sidewalk pavement, using joint filler of the type, thickness, and width indicated.

3.5.1 Contraction Joints

The contraction joints shall be formed in the fresh concrete by cutting a groove in the top portion of the slab to a depth of at least one-fourth of the sidewalk slab thickness, using a jointer to cut the groove, or by sawing a groove in the hardened concrete with a power-driven saw, unless otherwise approved. Sawed joints shall be constructed by sawing a groove in the concrete with a 1/8-inch blade to the depth indicated. An ample supply of saw blades shall be available on the job before concrete placement is started, and at least one standby sawing unit in good working order shall be available at the jobsite at all times during the sawing operations.

3.5.2 Expansion Joints

Expansion joints shall be formed with 3/8 inch joint filler strips. Joint filler shall be placed with top edge 1/4 inch below the surface and shall be held in place with steel pins or other devices to prevent warping of the filler during floating and finishing. Immediately after finishing operations are completed, joint edges shall be rounded with an edging tool having a radius of 1/8 inch, and concrete over the joint filler shall be removed. At the end of the curing period, expansion joints shall be carefully cleaned and filled with joint sealer.

The joint opening shall be thoroughly cleaned before the sealing material is placed. Sealing shall be done so that the material will not be spilled on exposed surfaces of the concrete. Concrete at the joint shall be surface dry and atmospheric and concrete temperatures shall be above 50 degrees F at the time of application of joint sealing material. Excess material on exposed surfaces of the concrete shall be removed immediately and concrete surfaces cleaned.

3.5.3 Reinforcement Steel Placement

Reinforcement steel shall be accurately and securely fastened in place with suitable supports and ties before the concrete is placed.

3.6 HEADER CURB AND CURB AND GUTTER JOINTS

Curb and gutter joints shall be constructed at right angles to the line of curb and gutter.

3.6.1 Contraction Joints

Contraction joints shall be constructed directly opposite contraction joints in abutting portland cement concrete pavements and spaced so that monolithic sections between curb returns will not be less than 5 feet nor greater than 15 feet in length. Contraction joints shall be constructed by means of 1/8-inch thick separators and of a section conforming to the cross section of the curb and gutter. Separators shall be removed as soon as practicable after concrete has set sufficiently to preserve the width and shape of the joint and prior to finishing.

3.6.2 Expansion Joints

Expansion joints shall be formed by means of preformed expansion joint filler material cut and shaped to the cross section of curb and gutter. Expansion joints shall be provided in curb and gutter directly opposite expansion joints of abutting portland cement concrete pavement, and shall be of the same type and thickness as joints in the pavement. Where curb and gutter do not abut portland cement concrete pavement, expansion joints at least 3/8 inch in width shall be provided at intervals not exceeding 120 feet. Expansion joints shall be provided in nonreinforced concrete gutter at locations indicated. Expansion joints shall be sealed immediately following curing of the concrete or as soon thereafter as weather conditions permit.

Expansion joints and the top 1-inch depth of curb and gutter contraction-joints shall be sealed with joint sealer. The joint opening shall be thoroughly cleaned before the sealing material is placed. Sealing shall be done so that the material will not be spilled on exposed surfaces of the concrete. Concrete at the joint shall be surface dry and atmospheric and concrete temperatures shall be above 50 degrees F at the time of application of joint sealing material. Excess material on exposed surfaces of the concrete shall be removed immediately and concrete surfaces cleaned.

3.7 CURING AND PROTECTION

3.7.1 General Requirements

Concrete shall be protected against loss of moisture and rapid temperature changes for at least 7 days from the beginning of the curing operation. Unhardened concrete shall be protected from rain and flowing water. All equipment needed for adequate curing and protection of the concrete shall be on hand and ready for use before actual concrete placement begins. Protection shall be provided as necessary to prevent cracking of the pavement due to temperature changes during the curing period.

3.7.1.1 Mat Method

The entire exposed surface shall be covered with two or more layers of burlap. Mats shall overlap each other at least 6 inches. The mat shall be thoroughly wetted with water prior to placing on concrete surface and shall be kept continuously in a saturated condition and in intimate contact with concrete for not less than 7 days.

3.7.1.2 Impervious Sheeting Method

The entire exposed surface shall be wetted with a fine spray of water and then covered with impervious sheeting material. Sheets shall be laid directly on the concrete surface with the light-colored side up and overlapped 12 inches when a continuous sheet is not used. The curing medium shall not be less than 18-inches wider than the concrete surface to be cured, and shall be securely weighted down by heavy wood planks, or a bank of moist earth placed along edges and laps in the sheets. Sheets shall be satisfactorily repaired or replaced if torn or otherwise damaged during curing. The curing medium shall remain on the concrete surface to be cured for not less than 7 days.

3.7.1.3 Membrane Curing Method

A uniform coating of white-pigmented membrane-curing compound shall be applied to the entire exposed surface of the concrete as soon after finishing as the free water has disappeared from the finished surface. Formed surfaces shall be coated immediately after the forms are removed and in no case longer than 1 hour after the removal of forms. Concrete shall not be allowed to dry before the application of the membrane. If any drying has occurred, the surface of the concrete shall be moistened with a fine spray of water and the curing compound applied as soon as the free water disappears. Curing compound shall be applied in two coats by hand-operated pressure sprayers at a coverage of approximately 200 square feet per gallon for both coats. The second coat shall be applied in a direction approximately at right angles to the direction of application of the first coat. The compound shall form a uniform, continuous, coherent film that will not check, crack, or peel and shall be free from pinholes or other imperfections. If pinholes, abrasion, or other discontinuities exist, an additional coat shall be applied to the affected areas within 30 minutes. Concrete surfaces that are subjected to heavy rainfall within 3 hours after the curing compound has been applied shall be resprayed by the method and at the coverage specified above. Areas where the curing compound is damaged by subsequent construction operations within the curing period shall be resprayed. Necessary precautions shall be taken to insure that the concrete is properly cured at sawed joints, and that no curing compound enters the joints. The top of the joint opening and the joint groove at exposed edges shall be tightly sealed before the concrete in the region of the joint is resprayed with curing compound. The method used for sealing the joint groove shall prevent loss of moisture from the joint during the entire specified curing period. Approved standby facilities for curing concrete pavement shall be provided at a location accessible to the jobsite for use in the event of mechanical failure of the spraying equipment or other conditions that might prevent correct application of the membrane-curing compound at the proper time. Concrete surfaces to which membrane-curing compounds have been applied shall be adequately protected during the entire curing period from pedestrian and vehicular traffic, except as required for joint-sawing operations and surface tests, and from any other possible damage to the continuity of the membrane.

3.7.2 Backfilling

After curing, debris shall be removed and the area adjoining the concrete shall be backfilled, graded, and compacted to conform to the surrounding area in accordance with lines and grades indicated.

3.7.3 Protection

Completed concrete shall be protected from damage until accepted. The Contractor shall repair damaged concrete and clean concrete discolored during construction. Concrete that is damaged shall be removed and

reconstructed for the entire length between regularly scheduled joints. Refinishing the damaged portion will not be acceptable. Removed damaged portions shall be disposed of as directed.

3.7.4 Protective Coating

Protective coating of linseed oil mixture shall be applied to the exposed-to-view concrete surface.

3.7.4.1 Application

Curing and backfilling operation shall be completed prior to applying protective coating. Concrete shall be surface dry and thoroughly clean before each application. Coverage shall be not more than 50 square yards per gallon for first application and not more than 70 square yards per gallon for second application, except that the number of applications and coverage for each application for commercially prepared mixture shall be in accordance with the manufacturer's instructions. Coated surfaces shall be protected from vehicular and pedestrian traffic until dry.

3.7.4.2 Precautions

Protective coating shall not be heated by direct application of flame or electrical heaters and shall be protected from exposure to open flame, sparks, and fire adjacent to open containers or applicators. Material shall not be applied at temperatures lower than 50 degrees F.

3.8 FIELD QUALITY CONTROL

3.8.1 General Requirements

The Contractor shall perform the inspection and tests described and meet the specified requirements for inspection details and frequency of testing. Based upon the results of these inspections and tests, the Contractor shall take the action and submit reports as required below, and any additional tests to insure that the requirements of these specifications are met.

3.8.2 Concrete Testing

3.8.2.1 Strength Testing

The Contractor shall provide molded concrete specimens for strength tests. Samples of concrete placed each day shall be taken not less than once a day nor less than once for every 250 cubic yards of concrete. The samples for strength tests shall be taken in accordance with ASTM C 172. Cylinders for acceptance shall be molded in conformance with ASTM C 31 by an approved testing laboratory. Each strength test result shall be the average of two test cylinders from the same concrete sample tested at 28 days, unless otherwise specified or approved. Concrete specified on the basis of compressive strength will be considered satisfactory if the averages of all sets of three consecutive strength test results equal or exceed the specified strength, and no individual strength test result falls below the specified strength by more than 500 psi.

3.8.2.2 Air Content

Air content shall be determined in accordance with ASTM C 173 or ASTM C 231. ASTM C 231 shall be used with concretes and mortars made with relatively dense natural aggregates. Two tests for air content shall be made on randomly selected batches of each class of concrete placed during each shift. Additional tests shall be made when excessive variation in concrete workability is reported by the placing foreman or the Government

inspector. If results are out of tolerance, the placing foreman shall be notified and he shall take appropriate action to have the air content corrected at the plant. Additional tests for air content will be performed on each truckload of material until such time as the air content is within the tolerance specified.

3.8.2.3 Slump Test

Two slump tests shall be made on randomly selected batches of each class of concrete for every 250 cubic yards, or fraction thereof, of concrete placed during each shift. Additional tests will be performed when excessive variation in the workability of the concrete is noted or when excessive crumbling or slumping is noticed along the edges of slip-formed concrete.

3.8.3 Thickness Evaluation

The anticipated thickness of the concrete shall be determined prior to placement by passing a template through the formed section or by measuring the depth of opening of the extrusion template of the curb forming machine. If a slip form paver is used for sidewalk placement, the subgrade shall be true to grade prior to concrete placement and the thickness will be determined by measuring each edge of the completed slab.

3.8.4 Surface Evaluation

The finished surface of each category of the completed work shall be uniform in color and free of blemishes and form or tool marks.

3.9 SURFACE DEFICIENCIES AND CORRECTIONS

3.9.1 Thickness Deficiency

When measurements indicate that the completed concrete section is deficient in thickness by more than 0.25 inch the deficient section will be removed, between regularly scheduled joints, and replaced.

3.9.2 High Areas

In areas not meeting surface smoothness and plan grade requirements, high areas shall be reduced either by rubbing the freshly finished concrete with carborundum brick and water when the concrete is less than 36 hours old or by grinding the hardened concrete with an approved surface grinding machine after the concrete is 36 hours old or more. The area corrected by grinding the surface of the hardened concrete shall not exceed 5 percent of the area of any integral slab, and the depth of grinding shall not exceed 1/4 inch. All pavement areas requiring grade or surface smoothness corrections in excess of the limits specified above shall be removed and replaced.

3.9.3 Appearance

Exposed surfaces of the finished work will be inspected by the Government and any deficiencies in appearance will be identified. Areas which exhibit excessive cracking, discoloration, form marks, or tool marks or which are otherwise inconsistent with the overall appearances of the work shall be removed and replaced.

- - o 0 o - -

SECTION 02551 - BITUMINOUS PAVING FOR ROADS, STREETS AND OPEN STORAGE AREAS

PART 1 - GENERAL

1.1 REFERENCES

The publications listed below form a part of this specification to the extent referenced. The publications are referred to in the text by basic designation only.

AMERICAN ASSOCIATION OF STATE HIGHWAY AND TRANSPORTATION OFFICIALS (AASHTO)

AASHTO T 182	(1978) Coating and Stripping of Bitumen Aggregate Mixtures

AMERICAN SOCIETY FOR TESTING AND MATERIALS (ASTM)

ASTM C 117	(1990) Materials Finer than 75-micrometer (No 200) Sieve in Mineral Aggregates by Washing
ASTM C 127	(1988) Specific Gravity and Absorption of Coarse Aggregate
ASTM C 128	(1988) Specific Gravity and Absorption of Fine Aggregate
ASTM C 136	(1984a) Sieve Analysis of Fine and Coarse Aggregates
ASTM C 183	(1988) Sampling and the Amount of Testing of Hydraulic Cement
ASTM D 75	(1987) Sampling Aggregates
ASTM D 140	(1988) Sampling Bituminous Materials
ASTM D 1559	(1989) Resistance to Plastic Flow of Bituminous Mixtures using Marshall Apparatus
ASTM D 2041	(1990) Theoretical Maximum Specific Gravity and Density of Bituminous Paving Mixtures
ASTM D 2172	(1988) Quantitative Extraction of Bitumen from Bituminous Paving Mixtures
ASTM D 2216	(1990) Laboratory Determination of Water (Moisture) Content of Soil, Rock, and Soil-Aggregate Mixtures
ASTM D 2726	(1990) Bulk Specific Gravity of Compacted Bituminous Paving Mixture using Saturated Surface-Dry Specimans
ASTM D 2950	(1991) Density of Bituminous Concrete in Place by Nuclear Methods

ASTM D 3515 (1989) Hot-Mixed, Hot-Laid Bituminous Paving Mixtures

NEW MEXICO STATE HIGHWAY AND TRANSPORTATION DEPARTMENT STANDARD SPECIFICATIONS: (NMSHTD)

NMSHTD-01 (1994) Standard Specifications for Highway and Bridge Construction, Section 401, Type I, Gradation C.

1.2 SUBMITTALS

The following shall be submitted in accordance with Section 01300 - SUBMITTALS:

SD-09 Reports

Bituminous Pavement.

Copies of test results.

1.3 PLANT, EQUIPMENT, MACHINES, AND TOOLS

1.3.1 General

The bituminous plant shall be of such capacity to produce the quantities of bituminous mixtures required. Hauling equipment, paving machines, rollers, miscellaneous equipment, and tools shall be provided in sufficient numbers and capacity and in proper working condition to place the bituminous paving mixtures at a rate equal to the plant output.

1.3.2 Straightedge

The Contractor shall furnish and maintain at the site, in good condition, one 12-foot straightedge for each bituminous paver. Straightedge shall be made available for Government use. Straightedges shall be constructed of aluminum or other lightweight metal and shall have blades of box or box-girder cross section with flat bottom reinforced to insure rigidity and accuracy. Straightedges shall have handles to facilitate movement on pavement.

1.4 WEATHER LIMITATIONS

Unless otherwise directed, bituminous courses shall not be constructed when temperature of the surface of the existing pavement or base course is below 40 degrees F.

1.5 PROTECTION OF PAVEMENT

After final rolling, no vehicular traffic of any kind shall be permitted on the pavement until the pavement has cooled to 140 degrees F.

1.6 GRADE AND SURFACE-SMOOTHNESS REQUIREMENTS

Finished surface of bituminous courses, when tested as specified below, shall conform to gradeline and elevations shown and to surface-smoothness requirements specified.

1.6.1 Plan Grade

The grade of the completed surface shall not deviate more than 0.05 foot from the plan grade.

1.6.2 Surface Smoothness

When a 12-foot straightedge is laid on the surface parallel with the centerline of the paved area or transverse from crown to pavement edge, the surface shall vary not more than 1/4 inch from the straightedge.

1.7 GRADE CONTROL

Lines and grades shall be established and maintained by means of line and grade stakes placed at site of work in accordance with the SPECIAL CLAUSES. Elevations of bench marks used by the Contractor for controlling pavement operations at the site of work will be determined, established, and maintained by the Government. Finished pavement elevations shall be established and controlled at the site of work by the Contractor in accordance with bench mark elevations furnished by the Contracting Officer.

1.8 SAMPLING AND TESTING

Sampling and testing shall be the responsibility of the Contractor. Sampling and testing shall be performed by a Government approved commercial testing laboratory. Unless otherwise specified, sampling shall be in accordance with ASTM D 75 for aggregates, ASTM C 183 for mineral filler, and ASTM D 140 for bituminous material. Copies of test results shall be furnished to the Contracting Officer. Approval of a source does not relieve the Contractor of responsibility for delivery at the job site of materials meeting the requirements herein.

1.8.1 Tests Required

1.8.1.1 Plant Mix

1.8.1.1.1 Hot Bin Gradations

Hot bin gradations (cold-feed gradation when drum mix plant is used), shall be tested in accordance with ASTM C 136 and ASTM C 117. A minimum of one test will be conducted per every 200 tons of wearing course mix placed or fraction thereof, and a minimum of one test conducted per every 350 tons of intermediate course mix placed or fraction thereof.

1.8.1.1.2 Marshall Specimens

Marshall Specimens shall be taken in accordance with ASTM D 1559. At least one set of specimens shall be taken per each 200 tons of wearing course mix placed, and one set of specimens shall be taken per each 350 tons of intermediate course mix placed. However, not less than two sets of specimens (three specimens per set) shall be taken in any one day regardless of the quantity of mix placed.

1.8.1.1.3 Asphalt Extractions

Asphalt extractions shall be performed in accordance with ASTM D 2172, Method A or B. At least one asphalt extraction shall be conducted per day.

1.8.1.2 Field Density Tests

Field Density Tests shall be conducted in accordance with ASTM D 2950. A minimum of one test will be conducted per every 200 tons of wearing course mix placed or fraction thereof, and a minimum of one test conducted per every 350 tons of intermediate course mix placed or fraction thereof.

1.8.1.3 Thickness Measurements

Thickness Measurements shall be taken at a minimum of one measurement for each 1000 square yards of mix placed.

1.9 DELIVERY, STORAGE, AND HANDLING OF MATERIALS

1.9.1 Mineral Aggregates

Mineral aggregates shall be delivered to the site of the bituminous mixing plant and stockpiled in such manner as to preclude fracturing of aggregate particles, segregation, contamination, or intermingling of different materials in the stockpiles or cold-feed hoppers. Mineral filler shall be delivered, stored, and introduced into the mixing plant in a manner to preclude exposure to moisture or other detrimental conditions.

1.9.2 Bituminous Materials

Bituminous materials shall be maintained at appropriate temperature during storage but shall not be heated by application of direct flame to walls of storage tanks or transfer lines. Storage tanks, transfer lines, and weigh buckets shall be thoroughly cleaned before a different type or grade of bitumen is introduced into the system. The asphalt cement shall be heated sufficiently to allow satisfactory pumping of the material; however, the storage temperature shall be maintained below 300 degrees F.

1.10 ACCESS TO PLANT AND EQUIPMENT

The Contracting Officer shall have access at all times to all parts of the paving plant for checking adequacy of the equipment in use; inspecting operation of the plant; verifying weights, proportions, and character of materials; and checking temperatures maintained in preparation of the mixtures.

PART 2 - PRODUCTS

2.1 HOT-MIX SURFACE COURSE

Bituminous hot-mix surface course shall conform to the requirements of NMSHTD-01 for "Plant Mix Bituminous Pavement (PMBP)" Section 401, except as specified hereinafter.

2.1.1 Asphalt Material

Asphalt material for the surface course shall be asphalt cement, Grade AC-10, conforming to NMSHTD-01 for "Bituminous Materials," Section 402. Asphalt material shall come from a source approved for use by the New Mexico State Highway and Transportation Department. The seal number from the tank and the number of the New Mexico State Highway and Transportation Department's Laboratory test report shall be furnished to the Contracting Officer, or the Contractor shall furnish a test report certifying that the material meets the specified requirements.

2.1.2 Asphalt Concrete

Asphalt concrete shall be Type I, gradation C.

2.1.3 State Specification Modifications

New Mexico State Highway and Transportation Department Standard Specification shall be modified as follows:

(a) Material retained on the No. 10 screen shall not exceed 65 percent.

(b) Density and stability requirements shall not apply.

(c) Construction methods paragraph shall not apply.

(d) The measurement and payment paragraphs shall not apply.

2.2 PROPORTIONING OF MIXTURE

2.2.1 Job Mix Formula (JMF)

The JMF for the bituminous mixture will be furnished by the Contractor to the Contracting Officer for approval. No payment will be made for mixtures produced prior to the approval of the JMF. The formula will indicate the percentage of each stockpile and mineral filler, the percentage of each size aggregate, the percentage of bitumen, and the temperature of the completed mixture when discharged from the mixer. The tolerances specified in NMSHTD-01, Section 401, will be allowed for asphalt content, temperature, and aggregate grading for tests conducted on the mix as discharged from the mixing plant. Bituminous mix that deviates more than 25 degrees F. from the JMF shall be rejected. The JMF may be adjusted during construction to improve paving mixtures, as directed, without adjustments in the contract prices.

2.2.2 Test Properties of Bituminous Mixtures

Finished mixture shall meet requirements described below when tested in accordance with ASTM D 1559. All samples will be compacted with 50 blows of specified hammer on each side of sample. When bituminous mixture fails to meet the requirements specified below, the paving operation shall be stopped until the cause of noncompliance is determined and corrected.

2.2.2.1 Stability, Flow, and Voids

Requirements for stability, flow, and voids are shown in TABLES I and II for nonabsorptive and absorptive aggregates, respectively.

TABLE I . NONABSORPTIVE-AGGREGATE MIXTURE

	Wearing Course
Stability minimum, pounds	1640
Flow maximum, 1/100-inch units	16
Voids total mix, percent (1)	3-5
Voids filled with bitumen, percent (2)	75-85

(1) The Contracting Officer may permit deviations from limits specified when gyratory method of design is used to develop the JMF.

a. Thickness of each lift shall be limited to 4 times the maximum aggregate size

TABLE II . ABSORPTIVE-AGGREGATE MIXTURE

	Wearing Course
Stability minimum, pounds	1640
Flow maximum, 1/100-inch units	16
Voids total mix, percent (1)	2-4
Voids filled with bitumen, percent (2)	80-90

(1) The Contracting Officer may permit deviations from limits specified when gyratory method of design is used to develop the JMF.

a. When the water-absorption value of the entire blend of aggregate does not exceed 2.5 percent as determined in accordance with ASTM C 127 and ASTM C 128, the aggregate is designated as nonabsorptive. The theoretical specific gravity computed from the apparent specific gravity or ASTM D 2041 will be used in computing voids total mix and voids filled with bitumen, and the mixture shall meet requirements in TABLE I.

b. When the water-absorption value of the entire blend of aggregate exceeds 2.5 percent as determined in accordance with ASTM C 127 and ASTM C 128, the aggregate is designated as absorptive. The theoretical specific gravity computed from the bulk-impregnated specific gravity method contained in ASTM D 2726, or ASTM D 2041 shall be used in computing percentages of voids total mix and voids filled with bitumen; the mixture shall meet requirements in TABLE II.

c. Thickness of each lift shall be limited to 4 times the maximum aggregate size.

2.2.2.2 Stability

The index of retained stability must be greater than 75 percent as determined by AASHTO T 182. When the index of retained stability is less than 75, the aggregate stripping tendencies may be countered by the use of hydrated lime or by treating the bitumen with an approved antistripping agent. The hydrated lime is considered as mineral filler and should be considered in the gradation requirements. The amount of hydrated lime or antistripping agent added to bitumen shall be sufficient, as approved, to produce an index of retained stability of not less than 75 percent. No additional payment will be made to the Contractor for addition of antistripping agent required.

PART 3 - EXECUTION

3.1 BASE COURSE CONDITIONING

The surface of the base course will be inspected for adequate compaction and surface tolerances specified in Section 02241 AGGREGATE BASE COURSE. Unsatisfactory areas shall be corrected.

3.2 PREPARATION OF BITUMINOUS MIXTURES

Rates of feed of aggregates shall be regulated so that the moisture content and temperature of aggregates will be within specified tolerances. Aggregates, mineral filler, and bitumen shall be conveyed into the mixer in proportionate quantities required to meet the JMF. Mixing time shall be as required to obtain a uniform coating of the aggregate with the

bituminous material. Temperature of bitumen at time of mixing shall not exceed 300 degrees F. Temperature of aggregate and mineral filler in the mixer shall not exceed 325 degrees F when bitumen is added. Overheated and carbonized mixtures or mixtures that foam shall not be used.

3.3 WATER CONTENT OF AGGREGATES

Drying operations shall reduce the water content of mixture to less than 0.75 percent. The water content test will be conducted in accordance with ASTM D 2216; the weight of the sample shall be at least 500 grams. If the water content is determined on hot bin samples, the water content will be a weighted average based on composition of blend.

3.4 STORAGE OF BITUMINOUS PAVING MIXTURE

Storage shall conform to the applicable requirements of ASTM D 3515; however, in no case shall the mixture be stored for more than 4 hours.

3.5 TRANSPORTATION OF BITUMINOUS MIXTURE

Transportation from paving plant to site shall be in trucks having tight, clean, smooth beds lightly coated with an approved releasing agent to prevent adhesion of the mixture to the truck bodies. Excessive releasing agent shall be drained prior to loading. Each load shall be covered with canvas or other approved material of ample size to protect mixture from weather and to prevent loss of heat. Loads that have crusts of cold, unworkable material or that have become wet will be rejected. Hauling over freshly placed material will not be permitted.

3.6 SURFACE PREPARATION OF UNDERLYING COURSE

Prior to placing of the intermediate or wearing course, the underlying course shall be cleaned of all foreign or objectionable matter with power brooms and hand brooms.

3.7 PRIME COATING

Surfaces of previously constructed base course shall be sprayed with a coat of bituminous material conforming to Section 02559 BITUMINOUS PRIME COAT.

3.8 TACK COATING

Contact surfaces of previously constructed pavement, curbs, manholes, and other structures shall be sprayed with a thin coat of bituminous material conforming to Section 02558 BITUMINOUS TACK COAT.

3.9 PLACING

Bituminous courses shall be constructed only when the base course or existing pavement has no free water on the surface. Bituminous mixtures shall not be placed without ample time to complete spreading and rolling during daylight hours, unless approved satisfactory artificial lighting is provided.

3.9.1 Offsetting Joints

The wearing course shall be placed so that longitudinal joints of the wearing course will be offset from joints in the intermediate course by at least 1 foot. Transverse joints in the wearing course shall be offset by at least 2 feet from transverse joints in the intermediate course.

3.9.2 General Requirements for Use of Mechanical Spreader

Range of temperatures of mixtures, when dumped into the mechanical spreader, shall be as determined by the Contracting Officer. Mixtures having temperatures less than 225 degrees F when dumped into the mechanical spreader shall not be used. The mechanical spreader shall be adjusted and the speed regulated so that the surface of the course being laid will be smooth and continuous without tears and pulls, and of such depth that, when compacted, the surface will conform to the cross section indicated. Placing with respect to center line areas with crowned sections or high side of areas with one-way slope shall be as directed. Placing of the mixture shall be as nearly continuous as possible, and speed of placing shall be adjusted, as directed, to permit proper rolling. When segregation occurs in the mixture during placing, the spreading operation shall be suspended until the cause is determined and corrected.

3.9.3 Placing Strips Succeeding Initial Strips

In placing each succeeding strip after initial strip has been spread and compacted as specified below, the screen of the mechanical spreader shall overlap the previously placed strip 2 to 3 inches and be sufficiently high so that compaction produces a smooth dense joint. Mixture placed on the edge of a previously placed strip by the mechanical spreader shall be pushed back to the edge of the strip by use of a lute. Excess mixture shall be removed and wasted.

3.9.4 Handspreading in Lieu of Machine Spreading

In areas where the use of machine spreading is impractical, the mixture shall be spread by hand. Spreading shall be in a manner to prevent segregation. The mixture shall be spread uniformly with hot rakes in a loose layer of thickness that, when compacted, will conform to required grade, density, and thickness.

3.10 COMPACTION OF MIXTURE

Rolling shall begin as soon after placing as the mixture will bear a roller without undue displacement. Delays in rolling freshly spread mixture will not be permitted. After initial rolling, preliminary tests of crown, grade, and smoothness shall be made by the Contractor. Deficiencies shall be corrected so that the finished course will conform to requirements for grade and smoothness specified herein. After the Contractor is assured of meeting crown, grade, and smoothness requirements, rolling shall be continued until a mat density of 97.0 to 100.0 percent and a joint density of 95.0 to 100.0 percent of density of laboratory-compacted specimens of the same mixture is obtained. Places inaccessible to rollers shall be thoroughly compacted with hot hand tampers.

3.10.1 Correcting Deficient Areas

Mixtures that become contaminated or are defective shall be removed to the full thickness of the course. Edges of the area to be removed shall be cut so that sides are perpendicular and parallel to the direction of traffic and so that the edges are vertical. Edges shall be sprayed with bituminous materials conforming to Section 02558 BITUMINOUS TACK COAT. Fresh paving mixture shall be placed in the excavated areas in sufficient quantity so that the finished surface will conform to grade and smoothness requirements. Paving mixture shall be compacted to the density specified herein. Skin patching of an area that has been rolled shall not be permitted.

3.11 JOINTS

3.11.1 General

Joints between old and new pavements, between successive work days, or joints that have become cold (less than 175 degrees F) shall be made to insure continuous bond between the old and new sections of the course. All joints shall have the same texture and smoothness as other sections of the course. Contact surfaces of previously constructed pavements coated by dust, sand, or other objectionable material shall be cleaned by brushing or shall be cut back as directed. When directed by the Contracting Officer, the surface against which new material is placed shall be sprayed with a thin, uniform coat of bituminous material conforming to Section 02558 BITUMINOUS TACK COAT. Material shall be applied far enough in advance of placement of a fresh mixture to insure adequate curing. Care shall be taken to prevent damage or contamination of the sprayed surface.

3.11.2 Transverse Joints

The roller shall pass over the unprotected end of a strip of freshly placed material only when placing is discontinued or delivery of the mixture is interrupted to the extent that the material in place may become cold. In all cases, prior to continuing placement, the edge of previously placed pavement shall be cut back to expose an even vertical surface for full thickness of the course. In continuing placement of a strip, the mechanical spreader shall be positioned on the transverse joint so that sufficient hot mixture will be spread to obtain a joint after rolling that conforms to the required density and smoothness specified herein.

3.11.3 Longitudinal Joints

Edges of a previously placed strip shall be prepared such that the pavement in and immediately adjacent to the joint between this strip and the succeeding strip meets the requirements for grade, smoothness, and density.

- - o 0 o - -

SECTION 02558

BITUMINOUS TACK COAT

PART 1 GENERAL

1.1 REFERENCES

The publications listed below form a part of this specification to the extent referenced. The publications are referred to in the text by basic designation only.

AMERICAN SOCIETY OF TESTING AND MATERIALS (ASTM)

ASTM D 140	(1988) Sampling Bituminous Materials
ASTM D 977	(1991) Emulsified Asphalt
ASTM D 2028	(1976, R 1992) Cutback Asphalt (Rapid Curing Type)
ASTM D 2995	(1984; R 1989) Determining Application Rate of Bituminous Distributors

NEW MEXICO STATE HIGHWAY AND TRANSPORTATION DEPARTMENT STANDARD SPECIFICATIONS: (NMSHTD)

NMSHTD-01	(1994) Standard Specification for Highway and Bridge Construction.

TEXAS STATE DEPARTMENT OF HIGHWAYS AND PUBLIC TRANSPORATION STANDARD SPECIFICATIONS: (TSDHPT)

TSDHPT-01	(1982) Standard Specifications for Construction of Highways, Streets and Bridges.

1.2 SUBMITTALS

The following shall be submitted in accordance with Section 01300 SUBMITTAL DESCRIPTIONS:

SD-09 Reports

Tests

Copies of all test results, within 24 hours of completion of tests. Certified copies of the manufacturer's test reports indicating compliance with applicable specified requirements, not less than 30 days before the material is required in the work.

1.3 PLANT, EQUIPMENT, MACHINES AND TOOLS

1.3.1 General Requirements

All plant, equipment, machines and tools used in the work shall be subject to approval and shall be maintained in a satisfactory working condition at all times.

1.3.2 Bituminous Distributor

The distributor shall have pneumatic tires of such size and number to prevent rutting, shoving or otherwise damaging the base surface or other layers in the pavement structure. The distributor shall be designed and

equipped to spray the bituminous material in a uniform coverage at the specified temperature, at readily determined and controlled rates with an allowable variation from the specified rate of not more than plus or minus 5 percent, and at variable widths. Distributor equipment shall include a separate power unit for the bitumen pump, full-circulation spray bars, tachometer, pressure gauges, volume-measuring devices, adequate heaters for heating of materials to the proper application temperature, a thermometer for reading the temperature of tank contents, and a hand hose attachment suitable for applying bituminous material manually to areas inaccessible to the distributor. The distributor shall be equipped to circulate and agitate the bituminous material during the heating process.

1.3.3 Power Brooms and Power Blowers

Power brooms and power blowers shall be suitable for cleaning the surfaces to which the tack coat is to be applied.

1.4 WEATHER LIMITATIONS

Tack coat shall be applied only when the surface to receive the tack coat is dry. Tack coat shall be applied only when the atmospheric temperature in the shade is 10 degrees C (50 degrees F) or above and when the temperature has not been below 2 degrees C (35 degrees F) for the 12 hours prior to application.

PART 2 PRODUCTS

2.1 BITUMINOUS MATERIAL

Asphaltic material shall be emulsified asphalt SS-1 or CSS-1 or cut-back asphalt grade RC-250, conforming to the requirements of the NMSHTD-01, for "Bituminous Materials", Secion 402; or conforming to the requirements of TSDHPT-01 Specification , Item 300.

PART 3 EXECUTION

3.1 PREPARATION OF SURFACE

Immediately before applying the tack coat all loose material, dirt, clay, or other objectionable material shall be removed from the surface to be treated. The area to be tacked shall also be dry and clean.

3.2 APPLICATION RATE

Bituminous material for the tack coat shall be applied in quantities of not less than 0.20 liter (0.05 gallon) nor more than 0.70 liter per square meter (0.15 gallon per square yard) of pavement surface. The exact quantities within the range specified, which may be varied to suit field conditions, will be determined by the Contracting Officer.

3.3 APPLICATION TEMPERATURE

Asphalt application temperature shall provide an application viscosity between 10 and 60 seconds, Saybolt Furol, or between 20 and 120 sq mm/sec, (20 and 120 centistokes,) kinematic. Application temperatures shall be within the following ranges.

Liquid Asphalts

RC-250	75-120 degrees C

Paving Grade Asphalts

Emulsions

SS-1	20-70 degrees C
CSS-1	20-70 degrees C

Liquid Asphalts

RC-250	165-250 degrees F*

Paving Grade Asphalts

Emulsions

SS-1	70-160 degrees F
CSS-1	70-160 degrees F

*These temperature ranges exceed the flash point of the material and care should be taken in their heating.

3.4 APPLICATION

Following preparation and subsequent inspection of the surface, the tack coat shall be applied at the specified rate with uniform distribution over the surface to be treated. All areas and spots missed by the distributor shall be properly treated with the hand spray. Following application of the tack material and prior to application of the succeeding layer of pavement, the tack shall be allowed to cure and to obtain evaporation of any volatiles or moisture. Until the succeeding layer of pavement is placed, the tacked area shall be maintained by protecting the surface against damage and by repairing and retacking deficient areas at no additional cost to the Government. If required, clean dry sand shall be spread to effectively blot up any excess bituminous material. No smoking, fires, or flames other than the heaters that are a part of the equipment shall be permitted within 8 meters (25 feet) of heating, distributing, and transferring operations of bituminous material other than bituminous emulsions.

3.5 FIELD QUALITY CONTROL

Samples of the bituminous material used will be obtained by the Contractor as directed, under the supervision of the Contracting Officer. The sample will be retained and tested by the Government at no cost to the Contractor.

3.6 SAMPLING AND TESTING

3.6.1 General Requirements

Sampling and testing shall be performed by a government approved commercial testing laboratory. No work requiring testing will be permitted until the facilities have been inspected and approved.

3.6.2 Sampling

The samples of bituminous material, unless otherwise specified, shall be in accordance with ASTM D 140.

3.6.3 Initial Sampling and Testing

3.6.3.1 Bituminous Materials

Sources from which bituminous materials are to be obtained shall be selected and notification thereof furnished the Contracting Officer within 15 days after the award of the contract.

3.6.3.2 Calibration Test

The Contractor shall furnish all equipment, materials, and labor necessary to calibrate the bituminous distributor. Calibration shall be made with the approved job material and prior to applying the tack coat material to the prepared surface. Calibration of the bituminous distributor shall be in accordance with ASTM D 2995.

3.6.3.3 Trial Applications

As a preliminary to providing the complete tack coat, three lengths of at least 30 meters (100 feet) for the full width of the distributor bar shall be tacked to evaluate the amount of tack that can be satisfactorily applied. Unless otherwise authorized, the trial application rate of bituminous materials shall be applied in the amount of 0.20 liters per square meter. (0.05 gallons per square yard.) Other trial applications shall be made using various amounts of material as may be deemed necessary.

3.6.4 Sampling and Testing During Construction

Quality control sampling and testing shall be performed as required in paragraph FIELD QUALITY CONTROL.

- - o 0 o - -

SECTION 02559 - BITUMINOUS PRIME COAT

PART 1 GENERAL

1.1 REFERENCES

The publications listed below form a part of this specification to the extent referenced. The publications are referred to in the text by basic designation only.

AMERICAN SOCIETY FOR TESTING AND MATERIALS (ASTM)

ASTM D 140	(1988) Sampling Bituminous Materials
ASTM D 2027	(1976, R 1992), Cutback Asphalt (Medium-Curing Type)
ASTM D 2995	(1984; R 1989) Determining Application Rate of Bituminous Distributors

NEW MEXICO STATE HIGHWAY AND TRANSPORTATION DEPARTMENT STANDARD SPECIFICATIONS: (NMSHTD)

NMSHTD-01	(1994) Standard Specification for Highway and Bridge Construction

TEXAS STATE DEPARTMENT OF HIGHWAYS AND PUBLIC TRANSPORTATION STANDARD SPECIFICATIONS: (TSDHPT)

TSDHPT-01	(1982) Standard Specification for Construction of Highways, Streets and Bridges

1.2 SUBMITTALS

The following shall be submitted in accordance with Section 01300 SUBMITTAL DESCRIPTIONS:

SD-09 Reports

Field Quality Control; Sampling and Testing

Copies of test results, within 24 hours of completion of tests. Sampling and testing shall be performed by an approved commercial testing laboratory or by facilities furnished by the Contractor.

1.3 PLANT, EQUIPMENT, MACHINES AND TOOLS

1.3.1 General Requirements

All plant, equipment, machines and tools used in the work shall be subject to approval and shall be maintained in a satisfactory working condition at all times. The equipment shall be adequate and shall have the capability of producing the results specified.

1.3.2 Bituminous Distributor

The distributor shall have pneumatic tires of such size and number to prevent rutting, shoving, or otherwise damaging the base surface or other layers in the pavement structure. It shall be designed and equipped to spray the bituminous material in a uniform double or triple lap at the specified temperature, at readily determined and controlled rates with an allowable variation from the specified rate of not more than plus or minus 5 percent, and at variable widths. Distributor equipment shall include a separate power unit for the bitumen pump, full-circulation spray bars, tachometer, pressure gauges, volume-measuring devices, adequate heaters for heating of materials to the proper application temperature, a thermometer for reading the temperature of tank contents, and a hand hose attachment suitable for applying bituminous material manually to areas inaccessible to the distributor. The distributor shall be equipped to circulate and agitate the bituminous material during the heating process.

1.3.3 Power Brooms and Power Blowers

Power brooms and power blowers shall be suitable for cleaning the surfaces to which the prime coat is to be applied.

1.3.4 Storage Tanks

Tanks shall be capable of heating the bituminous material, under effective and positive control at all times, to the required temperature. Heating shall be accomplished by steam coils, hot oil, or electricity. An armored thermometer shall be affixed to the tank so that the temperature of the bituminous material may be read at all times.

1.4 WEATHER LIMITATIONS

The prime coat shall be applied only when the subgrade or base course is dry enough to promote uniform coverage and the desired penetration into the treated surface. The prime coat shall be applied only when the atmospheric temperature in the shade is 10 degrees C (50 degrees F) or above and when the temperature has not been below 2 degrees C (35 degrees F) for the 12 hours prior to the application.

PART 2 PRODUCTS

2.1 BITUMINOUS MATERIAL

Asphaltic material shall be cut-back asphalt, grade MC-30, or MC-70, conforming to the requirements of NMSHTD-01 for "Bituminous Materials", Section 402; or conforming to the requirements of TSDHPT Specifications, Item 300.

PART 3 EXECUTION

3.1 PREPARATION OF SURFACE

Immediately before applying the prime coat, all loose material, dirt, clay, or other objectionable material shall be removed from the surface to be treated. To assure a uniform spread of the bituminous material, the portion of the subgrade, subbase, or base course prepared for treatment, if excessively dry, shall be lightly sprinkled with water immediately before the application, as directed.

3.2 PRIME COATING

3.2.1 Application Rate

Bituminous material for the prime coat shall be applied in quantities of not less than 0.70 liter (0.15 gallon) nor more than 1.80 liters per square meter (0.40 gallon per square yard) of pavement surface. The exact quantities within the range specified, which may be varied to suit field conditions, will be determined by the Contracting Officer.

3.2.2 Application Temperature

NORMAL SPRAY APPLICATION TEMPERATURES FOR

Cutback Asphalts

MC-30	29-87 degrees C
MC-70	50-107 degrees C

NORMAL SPRAY APPLICATION TEMPERATURES FOR

Cutback Asphalts

MC-30	85-190 degrees F
MC-70	120-225 degrees F

Cutback asphalt application temperature shall provide an application viscosity between 10 and 60 seconds, Saybolt Furol, or between 20 and 120 sq mm/sec, (20 and 120 centistokes,) kinematic.

3.2.3 Application

Following preparation and subsequent inspection of the surface, the prime coat shall be applied at the specified rate with uniform distribution over the surface to be treated. To obtain uniform application of the prime coat on the surface treated at the junction of previous and subsequent applications, building paper shall be spread on the surface for a sufficient distance back from the ends of each application so that the prime coat may be started and stopped on the paper. Immediately after application, the building paper shall be removed and destroyed. All areas and spots missed by the distributor shall be properly treated with the hand spray. Following application of the prime material, the surface shall be allowed to cure without being disturbed for a period of at least 48 hours or longer, as may be necessary to attain penetration into the treated course and evaporation of the volatiles from prime material. As directed, sand shall be spread to effectively blot up and cure any excess bituminous material. Until the succeeding layer of pavement is placed, the primed surface shall be maintained by protecting the surface against damage and by repairing and repriming deficient areas at no additional cost to the Government. No smoking, fire, or flames other than the heaters that are a part of the equipment shall be permitted within 8 meters (25 feet) heating, distributing, or transferring operation for bituminous materials other than emulsions.

3.3 FIELD QUALITY CONTROL

Samples of the bituminous material used will be obtained by the Contractor as directed, under the supervision of the Contracting Officer. The sample will be retained and tested by the Government at no cost to the Contractor.

3.4 SAMPLING AND TESTING

3.4.1 General Requirements

No work requiring testing will be permitted until the facilities have been inspected and approved. The first test will be at the expense of the Government. Costs incurred for subsequent inspections will be charged to the Contractor.

3.4.2 Sampling

The samples of bituminous material, unless otherwise specified, shall be taken in accordance with ASTM D 140.

3.4.3 Initial Sampling and Testing

3.4.3.1 Bituminous Materials

Sources from which bituminous materials are to be obtained shall be selected and notification thereof furnished the Contracting Officer within 15 days after the award of the contract. Certified copies of the manufacturer's test reports indicating compliance with applicable specified requirements shall be submitted to the Contracting Officer not less than 30 days before the material is required in the work.

3.4.3.2 Calibration Test

The Contractor shall furnish all equipment, materials, and labor necessary to calibrate the bituminous distributor. Calibration shall be made with the approved job material and prior to applying the prime coat material to the prepared surface. Calibration of the bituminous distributor shall be in accordance with ASTM D 2995.

3.4.3.3 Trial Applications

As a preliminary to providing the complete prime coat, three lengths of at least 30 meters (100 feet) for the full width of the distributor bar shall be primed to evaluate the amount of prime that can be satisfactorily applied. Unless otherwise authorized, the trial application rate of bituminous materials shall be applied in the amount of 1.10 liters per square meter. (0.25 gallon per square yard.) Other trial applications shall be made using various amounts of material as may be deemed necessary.

3.4.4 Sampling and Testing During Construction

Quality control sampling and testing shall be performed as required in paragraph FIELD QUALITY CONTROL.

- - o 0 o - -

SECTION 02660 - WATER LINES

PART 1 - GENERAL

1.1 REFERENCES

The publications listed below form a part of this specification to the extent referenced. The publications are referred to in the text by basic designation only.

AMERICAN NATIONAL STANDARDS INSTITUTE, INC. (ANSI)

ANSI B1.20.1	(1983) Pipe Threads, General Purpose (Inch).
ANSI B16.1	(1975) Cast Iron Pipe Flanges and Flanged Fittings Class 25, 125, 250 and 800.
ANSI B16.3	(1985) Malleable-Iron Threaded Fittings, Classes 150 and 300.
ANSI B16.26	(1983) Cast Copper Alloy Fittings for Flared Copper Tubes.
ANSI B36.10M	(1985) Welded and Seamless Wrought Steel Pipe.

AMERICAN SOCIETY FOR TESTING AND MATERIALS (ASTM)

ASTM D 1784	(1981) Rigid Poly(Vinyl Chloride) (PVC) Compounds and Chlorinated Poly(Vinyl Chloride) (CPVC) Compounds.
ASTM D 1785	(1988) Poly(Vinyl Chloride) (PVC) Plastic Pipe, Schedules 40, 80, and 120.
ASTM D 2241	(1988) Poly(Vinyl Chloride) (PVC) Pressure-Rated Pipe (SDR Series).
ASTM D 2464	(1988) Threaded Poly(Vinyl Chloride) (PVC) Plastic Pipe Fittings, Schedule 80.
ASTM D 2466	(1988) Poly(Vinyl Chloride) (PVC) Plastic Pipe Fittings, Schedule 40.
ASTM D 2467	(1988) Socket-Type Poly(Vinyl Chloride) (PVC) Plastic Pipe Fittings, Schedule 80.
ASTM D 2564	(1988) Solvent Cements for Poly(Vinyl Chloride) (PVC) Plastic Pipe and Fittings.
ASTM D 2657	(1990) Heat-Jointing Polyolefin Pipe and Fittings
ASTM D 2855	(1983) Making Solvent-Cemented Joints with Poly(Vinyl Chloride) (PVC) Pipe and Fittings.

ASTM F 477	(1976; R 1985) Elastomeric Seals (Gaskets) for Joining Plastic Pipe.

AMERICAN WATER WORKS ASSOCIATION (AWWA)

AWWA B300	(1987) Hypochlorites.
AWWA B301	(1987) Liquid Chlorine.
AWWA C104	(1985) Cement-Mortar Lining for Ductile-Iron Pipe and Fittings for Water.
AWWA C105	(1982) Polyethylene Encasement for Ductile-Iron Piping for Water and Other Liquids.
AWWA C110	(1987) Ductile-Iron and Gray-Iron Fittings, 3 In. through 48 In., for Water and Other Liquids.
AWWA C111	(1985) Rubber-Gasket Joints for Ductile-Iron and Gray-Iron Pressure Pipe and Fittings.
AWWA C151	(1986) Ductile Iron Pipe, Centrifugally Cast in Metal Molds or Sand Lined Molds, for Water or Other Liquids.
AWWA C153	(1988) Ductile-Iron Compact Fitting, 3 In. through 6 In. for Water and Other Liquids.
AWWA C500	(1986) Gate Valves for Water and Sewage Systems.
AWWA C502	(1985) Dry-Barrel Fire Hydrants.
AWWA C504	(1980) Rubber-Seated Butterfly Valves.
AWWA C509	(1987) Resilient-Seated Gate Valves, 3 through 12 NPS, for Water and Sewage Systems.
AWWA C600	(1987) Installation of Ductile Iron Water Works and Their Appurtenances.
AWWA C700	(1977) Cold Water Meters--Displacement Type.
AWWA C701	(1978) Cold Water Meters--Turbine Type for Customer Service.
AWWA C800	(1984) Underground Service Line Valves and Fittings.
AWWA C900	(1981; Errata) Polyvinyl Chloride (PVC) Pressure Pipe, 4 In. through 12 In. for Water.

AWWA C901	(1988) Polyethylene (PE) Pressure Pipe, Tubing, and Fittings, 1/2 in. through 3 in., for water.
AWWA C905	(1988) Polyvinyl Chloride (PVC) Water Transmission Pipe, Nominal Diameters 14 in. through 36 in.
AWWA M23	(1980) PVC Pipe -- Design and Installation.

DUCTILE IRON PIPE RESEARCH ASSOCIATION (DIPRA)

DIPRA-01	(1986, 2nd Ed.) Thrust Restraint Design for Ductile Iron Pipe.

MANUFACTURERS STANDARDIZATION SOCIETY OF THE VALVE AND FITTINGS INDUSTRY (MSS)

MSS SP-80	(1987) Bronze Gate, Globe, Angle and Check Valves.

NATIONAL FIRE PROTECTION ASSOCIATION (NFPA)

NFPA 24	(1987) Installation of Private Fire Service Mains and Their Appurtenances.
NFPA 49	(1975) Hazardous Chemicals Data.
NFPA 325M	(1984) Fire Hazard Properties of Flammable Liquids, Gases, and Volatile Solids.
NFPA 704	(1985) Identification of the Fire Hazards of Materials.

NATIONAL SANITATION FOUNDATION (NSF)

NSF Std 14	(Oct. 1965, Rev. thru Oct. 1987) Plastic Piping System Components and Related Materials.

STEEL STRUCTURES PAINTING COUNCIL (SSPC)

SSPC-Paint 21	(1982) White or Colored Silicone Alkyd Paint.
SSPC-Paint 25	(1982) Red Iron Oxide, Zinc Oxide, Raw Linseed Oil and Alkyd Primer (without Lead and Chromate Pigments).

UNI-BELL PVC PIPE ASSOCIATION (UBPPA)

UBPPA UNI-B-11	(1986) Poly(Vinyl Chloride) (PVC) Water Transmission Pipe (Nominal Diameters 14-36 Inch).

1.2 GENERAL

This section covers potable water distribution and service lines, and connections to building service at a point approximately 5 feet outside buildings and structures to which service is required.

1.2.1 Piping for Water Service Lines

Piping for water service lines less than 3 inches in diameter shall be Polyvinyl Chloride (PVC) plastic, or polyethylene, unless otherwise shown or specified. Piping for water service lines for sizes 3 inches and larger shall be Polyvinyl Chloride (PVC) plastic through 12-inch nominal diameter, unless otherwise shown or specified.

1.2.2 Piping for Water Distribution Lines 3 Inches or Larger

Piping for water distribution lines 3 inches or larger shall be ductile iron, or Polyvinyl Chloride (PVC) plastic, unless otherwise shown or specified.

1.2.3 Plastic Pipe

All thermoplastic piping system components (PVC and polyethylene) intended for transportation of potable water shall comply with NSF Std 14 and shall be legibly marked with their symbol.

1.2.4 Excavation, Trenching, and Backfilling for Water Lines

Excavation, trenching, and backfilling shall be in accordance with the applicable provisions of SECTION: 02222 - EXCAVATION, TRENCHING, AND BACKFILLING FOR UTILITIES SYSTEMS, except as modified herein.

1.3 SUBMITTALS

The following shall be submitted in accordance with SECTION: 01300 - SUBMITTALS:

SD-10, Design Analysis and Calculations

All calculations shall be submitted to the Contracting Officer for approval.

SD-17, Manufacturer's Catalog Data

Data composed of catalog cuts, brochures, circulars, specifications and product data, and printed information in sufficient detail and scope to verify compliance with requirements of the contract documents.

SD-44, Manufacturer's Instructions

The Contractor shall, as a part of the detail drawings, submit to the Contracting Officer the manufacturer's recommendations for each material or procedure to be utilized, which is required to be in accordance with such recommendations. The Contractor shall have a copy of the manufacturer's instructions available at the construction site at all times and shall follow these instructions unless otherwise directed by the Contracting Officer.

SD-60, Safety Plan

The method proposed for disposal of waste water from hydrostatic tests and disinfection shall be submitted to the Contracting Officer for approval prior to performing hydrostatic tests.

SD-70, Test Reports

An independent testing agency's certified reports of inspections and laboratory tests, including analysis and interpretation of test results.

Each report shall be properly identified. Test methods used and compliance with recognized test standards shall be described.

SD-72, Training Data

The manufacturer shall assist the Contractor by training and instructing the Contractor's personnel in proper installation procedures and techniques. Certification will be required in writing from the manufacturer listing the names of those persons so qualified. The manufacturer's representative shall be a person regularly engaged in such service and shall be certified in writing by the manufacturer to be technically qualified and experienced to supervise this training.

SD-76, Certificates of Compliance

Upon completion of the project and before final acceptance, the Contractor shall deliver to the Contracting Officer a statement signed by the principal officer of the contracting firm stating that the installation is satisfactory and in complete accordance with the contract plans and specifications and the manufacturer's prescribed procedures and techniques.

SD-91, Records

The Contractor will maintain a chronological record throughout the course of the contract of all uncorrected deficiency items.

1.4 HANDLING

Pipe and accessories shall be handled so as to insure delivery to the trench in sound, undamaged condition. Particular care shall be taken not to injure the pipe coating or lining. If the coating or lining of any pipe or fitting is damaged, the repair shall be made by the Contractor at his expense in a satisfactory manner. No other pipe or material of any kind shall be placed inside a pipe or fitting after the coating has been applied. Pipe shall be carried into position and not dragged. Use of pinch bars and tongs for aligning or turning pipe will be permitted only on the bare ends of the pipe. The interior of pipe and accessories shall be thoroughly cleaned of foreign matter before being lowered into the trench and shall be kept clean during laying operations by plugging or other approved method. Before installation, the pipe shall be inspected for defects. Material found to be defective before or after laying shall be replaced with sound material without additional expense to the Government. Rubber gaskets that are not to be installed immediately shall be stored in a cool and dark place. Polyvinyl Chloride Pipe and fittings shall be handled and stored in accordance with the manufacturer's recommendations. Storage facilities shall be classified and marked in accordance with NFPA 704, with classification as indicated in NFPA 49 and NFPA 325M.

1.4.1 Polyethylene (PE) Pipe

Polyethylene (PE) pipe, fittings, and accessories shall be handled in conformance with AWWA C901.

PART 2 - PRODUCTS

2.1 MATERIALS

Materials shall conform to the respective specifications and other requirements specified below.

2.1.1 Pipe

2.1.1.1 Ductile-Iron Pipe

Ductile-iron pipe shall conform to AWWA C151, working pressure not less than 150 psi, unless otherwise shown or specified. Pipe shall be cement-mortar lined in accordance with AWWA C104. Linings shall be standard.

2.1.1.2 Polyvinyl Chloride (PVC) Plastic Pipe

All pipe, couplings and fittings shall be manufactured of material conforming to ASTM D 1784, Class 12454B.

a. Pipe Less Than 4-Inch Diameter:

(1) Screw-Joint: Pipe to dimensional requirements of ASTM D 1785 Schedule 80, with joints meeting requirements of 150 psi working pressure, 200 psi hydrostatic test pressure, unless otherwise shown or specified. Pipe couplings when used, must be tested as required by ASTM D 2464.

(2) Solvent Cement Joint: Pipe to dimensional requirements of ASTM D 1785 or ASTM D 2241 with joints meeting the requirements of 150 psi working pressure and 200 psi hydrostatic test pressure.

b. Pipe 4-Inch through 12-Inch Diameter: Pipe, couplings and fittings 4-inch through 12-inch diameter shall conform to the requirements of AWWA C900, Class 150, CIOD pipe dimensions only, elastomeric-gasket joint or mechanical joint, unless otherwise shown or specified.

c. Pipe 14-Inch through 36-Inch Diameter: Pipe shall conform to the requirements of AWWA C905; Class 165, unless otherwise shown or specified.

2.1.1.3 Polyethylene Plastic (PE)

Pipe, tubing, and heat fusion fittings shall confirm to AWWA C901 for pipe less than 3 inches in diameter.

2.1.2 Joints

2.1.2.1 Ductile Iron Pipe

a. Mechanical joints shall be of the stuffing box type and shall conform to AWWA C111.

b. Push-on joints shall conform to AWWA C111.

c. Rubber gaskets and lubricant shall conform to the applicable requirements of AWWA C111.

2.1.2.2 Polyvinyl Chloride Pipe

Joints, fittings, and couplings shall be as specified for PVC pipe. Joints connecting pipe of differing materials shall be made in accordance with the manufacturer's recommendation as approved by the Contracting Officer.

2.1.2.3 Polyethylene (PE) Pipe

Joints for pipe fittings and coupling shall be strong pressure tight joints as specified for polyethylene pipe in paragraph "INSTALLATION."

Joints connecting pipe of differing materials shall be made in accordance with the manufacturer's recommendation as approved by the Contracting Officer.

2.1.2.4 Insulating Joints

Insulating joints shall be installed between nonthreaded ferrous and nonferrous metallic pipe, fittings and valves. Insulating joints shall consist of a sandwich-type flange insulating gasket of the dielectric type, insulating washers, and insulating sleeves for flange bolts. Insulating gaskets shall be full faced with outside diameter equal to the flange outside diameter. Bolt insulating sleeves shall be full length. Units shall be of a shape to prevent metal-to-metal contact of dissimilar metallic piping elements.

2.1.3 Fittings and Specials

2.1.3.1 Ductile Iron Pipe

Fittings and specials shall be suitable for 150 psi pressure rating, unless otherwise specified. Fittings and specials for mechanical joint pipe shall conform to AWWA C110. Fittings and specials for use with push-on joints shall conform to AWWA C110 and AWWA C111. Fittings and specials shall be cement mortar lined in accordance with AWWA C104. Linings shall be standard thickness. Ductile iron compact fittings shall be in accordance with AWWA C153.

2.1.3.2 Polyvinyl Chloride (PVC) Pipe

a. For pipe less than 4-inch diameter, fittings for threaded pipe shall conform to the requirements of ASTM D 2464, threaded to conform to the requirements of ANSI B1.20.1 for use with Schedule 80 pipe and fittings; fittings for solvent cement jointing shall conform to ASTM D 2466 or ASTM D 2467.

b. For pipe 4-inch through 12-inch diameter, fittings and specials shall be cast iron, bell end in accordance with AWWA C110, 150 psi pressure rating unless otherwise shown or specified, except that profile of bell may have special dimensions as required by the pipe manufacturer; or may be fittings and specials of the same material as the pipe with elastomeric gaskets, all in conformance with the requirements of AWWA C900. Cast-iron fittings and specials shall be cement-mortar lined (standard thickness) in accordance with AWWA C104. Fittings shall be for bell and spigot pipe or plain end pipe, or as applicable. Ductile iron compact fittings shall be in accordance with AWWA C153.

2.1.3.3 Dielectric Fittings

Dielectric fittings shall be installed between threaded ferrous and nonferrous metallic pipe, fittings and valves, except where corporation stops join mains. Dielectric fittings shall prevent metal-to-metal contact of dissimilar metallic piping elements and shall be suitable for the required working pressure.

2.1.4 Couplings

2.1.4.1 Mechanical Couplings

Mechanical couplings shall be the sleeve type, or when approved, the split-sleeve type and shall provide a tight flexible joint under all reasonable conditions, such as pipe movements caused by expansion, contraction, slight settling or shifting in the ground, minor variations

in trench gradients, and traffic vibrations. Couplings shall be of strength not less than the adjoining pipeline.

a. Sleeve-type couplings shall be used for joining plain end pipe sections. The couplings shall consist of one steel middle ring, two steel followers, two gaskets, and the necessary steel bolts and nuts to compress the gaskets.

b. Split-sleeve type couplings may be used in aboveground installations when approved in special situations and shall consist of gaskets and a housing in two or more sections with the necessary bolts and nuts.

2.1.5 Valves

2.1.5.1 Gate Valves

Gate valves shall be designed for a working pressure of not less than 150 psi. Valve connections shall be as required for the piping in which they are installed. Valves shall have a clear waterway equal to the full nominal diameter of the valve, and shall be opened by turning counterclockwise. The operating nut or wheel shall have an arrow, cast in the metal, indicating the direction of opening.

a. Valves smaller than 3 inches shall be all bronze and shall conform to MSS SP-80, Type 1, Class 150.

b. Valves 3 inches and larger shall be iron body, bronze mounted, and shall conform to AWWA C500. Flanges shall not be buried. An approved pit shall be provided for all flanged connections.

c. Resilient-Seated Gate Valves: For valves 3 to 12 inches in size, resilient-seated gate valves shall conform to AWWA C509.

2.1.5.2 Rubber-Seated Butterfly Valves

Rubber-seated butterfly valves shall conform to the performance requirements of AWWA C504. Wafer type valves conforming to the performance requirements of AWWA C504 in all respects, but not meeting laying length requirements will be acceptable if supplied and installed with a spacer providing the specified laying length. All tests required by AWWA C504 must be met. Flanged-end valves shall be installed in an approved pit and provided with a union or sleeve-type coupling in the pit to permit removal. Mechanical-end valves 3 through 10 inches in diameter may be direct burial if provided with a suitable valve box, means for manual operation, and an adjacent pipe joint to facilitate valve removal. Valve operators shall restrict closing to a rate requiring approximately 60 seconds, from fully open to fully closed.

2.1.5.3 Vacuum and Air Relief Valves

Vacuum and air relief valves shall be of the size shown and shall be of a type that will release air and prevent the formation of a vacuum. The valves shall automatically release air when the lines are being filled with water and shall admit air into the line when water is being withdrawn in excess of the inflow. Valves shall be iron body with bronze trim and stainless steel float.

2.1.5.4 Indicator Post for Valves

Each valve shown on the drawings with the designation "P.I.V." shall be equipped with indicator post conforming to the requirements of NFPA 24.

Operation shall be by wrench. One wrench shall be provided for valve operation.

2.1.6 Valve Boxes

Valve boxes shall be cast iron or concrete, except that concrete boxes may be installed only in locations not subjected to vehicular traffic. Cast-iron boxes shall be extension type with slide-type adjustment and with flared base. The minimum thickness of metal shall be 3/16-inch. Concrete boxes shall be the standard product of a manufacturer of precast concrete equipment. The word "WATER" shall be cast in the cover. The boxes shall be of such length as will be adapted, without full extension, to the depth of cover required over the pipe at the valve location.

2.1.7 Valve Pits

Valve pits shall be constructed at locations indicated or as required above and in accordance with the details shown. Concrete shall have compressive strength of 3000 psi in accordance with SECTION: 03300 - CONCRETE FOR BUILDING CONSTRUCTION.

2.1.8 Fire Hydrants

Fire hydrants shall conform to AWWA C502. Hydrants shall have a 6-inch bell connection, two 2-1/2 inch hose connections and one 4-1/2-inch pumper connection. Outlets shall have American National Standardfire-hose coupling threads. Working parts shall be bronze. Design, material, and workmanship shall be similar and equal to the latest stock pattern ordinarily produced by the manufacturer. Hydrants shall be painted with one coat of red iron oxide, zinc oxide primer conforming to SSPC-Paint 25 and two finish coats of silicone alkyd paint conforming to SSPC-Paint 21, of the color directed. Hydrants shall be dry-barrel type conforming to AWWA C502 with valve opening at 5 inches in diameter. Suitable bronze adapter for each outlet, with caps, shall be furnished as directed.

2.1.9 Miscellaneous Items

2.1.9.1 Service Clamps

Service clamps shall have a pressure rating not less than that of the pipe to be connected and shall be either the single or double flattened strap type. Clamps shall have a galvanized malleable-iron body with cadmium plated straps and nuts. Clamps shall have a rubber gasket cemented to the body.

2.1.9.2 Corporation Stops

Corporation stops shall have standard corporation stop thread conforming to AWWA C800 on the inlet end, with flanged joints, compression pattern flared tube couplings, or wiped joints for connections to goosenecks.

2.1.9.3 Goosenecks

Copper tubing for gooseneck connections shall conform to the applicable requirements of ASTM B 88, Type K, annealed. Length of cable requirement connections be in accordance with standard practice.

2.1.9.4 Service Stops

Service stops shall be water-works inverted-ground-key type, oval or round flow way, tee handle, without drain. Pipe connections shall be suitable for the type of service pipe used. All parts shall be of bronze with

female iron-pipe-size connections or compression-pattern flared tube couplings, and shall be designed for a hydrostatic test pressure not less than 200 psi.

2.1.9.5 Tapping Sleeves

Tapping sleeves of the sizes indicated for connection to existing main shall be the cast gray, ductile, or malleable-iron, split-sleeve type with flanged or grooved outlet, and with bolts, follower rings and gaskets on each end of the sleeve. Construction shall be suitable for a maximum working pressure of 150 psi. Bolts shall have square heads and hexagonal nuts. Longitudinal gaskets and mechanical joints with gaskets shall be as recommended by the manufacturer of the sleeve. When using grooved mechanical tee, it shall consist of an upper housing with full locating collar for rigid positioning which engages a machine-cut hole in pipe, encasing an elastomeric gasket which conforms to the pipe outside diameter around the hole and a lower housing with positioning lugs, secured together during assembly by nuts and bolts as specified, pretorqued to 50 foot-pound.

2.1.9.6 Service Boxes

Service boxes shall be cast iron, plastic, or concrete. Extension service boxes of the required length and having either screw or slide-type adjustment shall be installed at all service box locations. The boxes shall have housings of sufficient size to completely cover the service stop and shall be complete with identifying covers.

2.1.9.7 Disinfection

Chlorinating materials shall conform to the following:

Chlorine, Liquid: AWWA B301.

Hypochlorite, Calcium and Sodium: AWWA B300.

2.1.9.8 Meters

Meters shall be of the displacement type conforming to AWWA C700 or turbine type conforming to AWWA C701. Registers may be round or straight reading type. Connection to the water line shall be as required for the particular installation. All meters used for the same system shall be of one type and manufacturer.

2.1.9.9 Meter Boxes

Meter boxes shall be of cast iron, plastic, or concrete of sufficient size to completely enclose the meter and shut-off valve or service stop. Box height shall extend from invert of the meter to final grade at the meter location. Cover shall be cast iron with the word "WATER" cast in it.

PART 3 - EXECUTION

3.1 INSTALLATION

3.1.1 Cutting of Pipe

Cutting of pipe shall be done in a neat and workmanlike manner without damage to the pipe. Unless otherwise recommended by the manufacturer and authorized by the Contracting Officer, cutting shall be done with an approved type mechanical cutter. Wheel cutter shall be used when practicable. Copper tubing shall be cut square and all burrs shall be

removed. Squeeze type mechanical cutters shall not be used for ductile iron.

3.1.2 Adjacent Facilities

3.1.2.1 Sewer Lines

Where the location of the water pipe is not clearly defined in dimensions on the drawings, the water pipe shall not be laid closer horizontally than 10 feet from a sewer except where the bottom of the water pipe will be at least 12 inches above the top of the sewer pipe, in which case the water pipe shall not be laid closer horizontally than 6 feet from the sewer. Where water lines cross under gravity-flow sewer lines, the sewer pipe for a distance of at least 10 feet each side of the crossing shall be fully encased in concrete or shall be made of pressure pipe with no joint located within 3 feet horizontally of the crossing. Water lines shall in all cases cross above sewage force mains or inverted siphons and shall be not less than 2 feet above the sewer main. Joints in the sewer main, closer horizontally than 3 feet to the crossing, shall be encased in concrete.

3.1.2.2 Water Lines

Water lines shall not be laid in the same trench with sewer lines, gas lines, fuel lines, or electric wiring.

3.1.3 Joint Deflection

3.1.3.1 Ductile Iron Pipe

The maximum allowable deflection will be as given in AWWA C600. If the alignment requires deflection in excess of the above limitations, special bends or a sufficient number of shorter lengths of pipe shall be furnished to provide angular deflections within the limit set forth.

3.1.3.2 Flexible Plastic Pipe

Maximum offset in alignment between adjacent pipe joints shall be as recommended by the manufacturer and approved by the Contracting Officer, but in no case shall it exceed 5 degrees.

3.1.4 Placing and Laying

Pipe and accessories shall be carefully lowered into the trench by means of derrick, ropes, belt slings, or other authorized equipment. Under no circumstances shall any of the water-line materials be dropped or dumped into the trench. Care shall be taken to avoid abrasion of the pipe coating. Except where necessary in making connections with other lines or as authorized by the Contracting Officer, pipe shall be laid with the bells facing in the direction of laying. The full length of each section of pipe shall rest solidly upon the pipe bed, with recesses excavated to accommodate bells, couplings, and joints. Pipe that has the grade or joint disturbed after laying shall be taken up and relaid. Pipe shall not be laid in water or when trench conditions are unsuitable for the work. Water shall be kept out of the trench until joining is completed. When work is not in progress, open ends of pipe, fittings, and valves shall be securely closed so that no trench water, earth, or other substance will enter the pipes or fittings. Where any part of the coating or lining is damaged, the repair shall be made by the Contractor at his expense in a satisfactory manner. Pipe ends left for future connections shall be valved, plugged, or capped, and anchored, as shown.

3.1.4.1 Connections

Where connections are made between new work and existing mains, the connections shall be made by using specials and fittings to suit the actual conditions. Standard methods are available for making connections to various types of pipe, either under pressure or in the dewatered condition. Where made under pressure, these connections shall be installed as approved by the Contracting Officer.

3.1.4.2 Penetrations

Pipe passing through walls of valve pits and structures shall be provided with ductile-iron or Schedule 40 steel wall sleeves. Annular space between walls and sleeves shall be filled with rich cement mortar. Annular space between pipe and sleeves shall be filled with mastic.

3.1.4.3 Flanged Pipe

Flanged pipe shall only be installed above ground or with the flanges in valve pits.

3.1.5 Jointing

3.1.5.1 Ductile Iron Pipe

Mechanical and push-on type joints shall be installed in accordance with AWWA C600.

3.1.5.2 Polyvinyl Chloride (PVC) Plastic Pipe

a. Pipe Less Than 4-Inch Diameter: Threaded joints shall be made by wrapping the male threads with approved thread tape or applying an approved lubricant, then threading the joining members together. The joint shall be tightened using strap wrenches to prevent damage to the pipe and/or fitting. To avoid excessive torque, joints shall be tightened no more than one thread past hand-tight. Solvent cement joints shall utilize sockets conforming to the requirements of ASTM D 2467. The solvent cement used shall meet the requirements of ASTM D 2564; the joint assembly shall be made in accordance with ASTM D 2855 and the manufacturer's specific recommendations.

b. Pipe 4-Inch through 12-Inch Diameter: Joints shall be elastomeric-gasket as specified in AWWA C900. Preformed rubber ring gaskets for elastomeric gasket joints shall be made in accordance with the requirements of ASTM F 477, and as required herein. All pipe ends for push-on joints shall be beveled to facilitate assembly and marked to indicate when the pipe is fully seated. The gasket shall be prelubricated to prevent displacement. Care shall be exercised to assure the gasket and ring groove in the bell or coupling match. The manufacturer of the pipe or fitting must also supply the elastomeric gasket. Couplings shall be provided with stops or centering rings to assure that the coupling is centered on the joint.

3.1.5.3 Polyethylene (PE) Pipe

Jointing shall comply with ASTM D2657, Technique I Socket Fusion or Technique III Hot Gas Fusion. Technique II is not acceptable.

3.1.5.4 Insulating Joints

Insulating joints shall be installed in accordance with details specified for joints under paragraph "MATERIALS."

3.1.5.5 Connections

Connections between different types of pipe and accessories shall be made with transition fittings approved by the Contracting Officer.

3.1.6 Service Lines

Service lines shall include the pipeline connecting building piping to water distribution lines to the connections with the building service at a point approximately 5 feet outside the building where such building service exists. Where building services are not installed, the Contractor shall terminate the service lines approximately 5 feet from the site of the proposed building at a point designated by the Contracting Officer. Such service lines shall be closed with plugs or caps. All service stops and valves shall be provided with extension service boxes of the lengths required. Service lines shall be constructed in accordance with the following requirements:

3.1.6.1 Service Lines 2 Inches and Smaller

Service lines 2 inches and smaller shall be connected to the main by a directly-tapped corporation stop or by a service clamp. A corporation stop and a copper gooseneck shall be provided with either type of connection. Maximum sizes for directly-tapped corporation stops and for outlets with service clamps shall be as in TABLE I. Where two or more gooseneck connections to the main are required for an individual service, such connections shall be made with standard branch connections. The total clear area of the branches shall be at least equal to the clear area of the service which they are to supply.

TABLE I. SIZE OF CORPORATION STOPS AND OUTLETS

Pipe Size Inches	Corporation Stops, Inches: For Ductile-Iron Pipe	Corporation Stops, Inches: For Asbestos-Cement Pipe	Outlets w/Service Clamps, Inches: Single & Double Strap
3	--	3/4	1
4	1	3/4	1
6	1-1/4	3/4	1-1/2
8	1-1/2	1	2
10	1-1/2	1	2
12 & larger	2	1	2

a. Connections to Asbestos-Cement Mains: A corporation stop and a gooseneck shall be provided with the connection. Maximum sizes for outlets shall be in Table II below:

TABLE II

Pipe Size Inches	Outlet Sizes Inches
3 and 4	3/4, 1, 1-1/4
6 and larger	3/4, 1, 1-1/4, 1-1/2

(1) Service lines 1-1/2 inches and smaller shall have a service stop.

(2) Service lines 2 inches in size shall have a gate valve.

(3) Service lines larger than 2 inches shall be connected to the main by a tapped saddle, tapping sleeve and valve, service clamp or reducing tee, depending on the main diameter and the service line diameter, and shall have a gate valve. Three-inch and larger lines may use rubber-seated butterfly valves as specified above, or gate valves.

3.1.7 Setting of Fire Hydrants and Valves and Valve Boxes

3.1.7.1 Fire Hydrants

Fire hydrants shall be located and installed as shown. Each hydrant shall be connected to the main with a 6-inch branch line having at least as much cover as the distribution main. Hydrants shall be set plumb with pumper nozzle facing the roadway and with the center of the lowest outlet not less than 18 inches above the finished surrounding grade, and the operating nut not more than 48 inches above the finished surrounding grade. Except where approved otherwise, the backfill around hydrants shall be thoroughly compacted to the finished gradeline immediately after installation to obtain beneficial use of the hydrant as soon as practicable. The hydrant shall be set upon a slab of concrete not less than 4 inches thick and 15 inches square. Not less than 7 cubic feet of free-draining broken stone or gravel shall be placed around and beneath the waste opening of dry barrel hydrants to ensure drainage.

3.1.7.2 Valves and Valve Boxes

Valves and valve boxes shall be installed where shown or specified, and shall be set plumb. Valve boxes shall be centered on the valves. Boxes shall be installed over each outside gate valve unless otherwise shown. Where feasible, valves shall be located outside the area of roads and streets. Earth fill shall be carefully tamped around each valve box to a distance of 4 feet on all sides of the box, or the undisturbed trench face if less than 4 feet.

3.1.7.3 Valves and Hydrants

Valves and hydrants after delivery shall be drained to prevent freezing and shall have the interiors cleaned of all foreign matter before installation. Stuffing boxes shall be tightened and the hydrant or valve shall be fully opened and fully closed to insure that all parts are in working condition.

3.1.7.4 Service Boxes

Where water lines are located below paved streets having curbs, the boxes shall be installed directly back of the curbs. Where no curbing exists, service boxes shall be installed in accessible locations, beyond the limits of street surfacing, walks and driveways.

3.1.7.5 Valves

Vacuum and air relief valves shall be installed in valve pits as shown.

3.1.8 Tapped Tees and Crosses

Tapped tees and crosses for future connections shall be installed where shown.

3.1.9 Thrust Restraint

Plugs, caps, tees and bends deflecting 11-1/4 degrees or more, either vertically or horizontally, on waterlines 4 inches in diameter or larger,

and fire hydrants shall be provided with thrust blocking, or metal tie rods and clamps or lugs, as directed. Valves shall be securely anchored or shall be provided with thrust blocking to prevent movement. Thrust restraints shall be either thrust blocks or, for ductile-iron pipes, restrained joints.

3.1.9.1 Thrust Blocks

Thrust blocking shall be concrete of a mix not leaner than: 1 cement, 2-1/2 sand, 5 gravel; and having a compressive strength of not less than 2,000 psi after 28 days. Blocking shall be placed between solid ground and the hydrant or fitting to be anchored. Unless otherwise indicated or directed, the base and thrust bearing sides of thrust blocks shall be poured directly against undisturbed earth. The sides of thrust blocks not subject to thrust may be poured against forms. The area of bearing shall be as shown or as directed. Blocking shall be placed so that the fitting joints will be accessible for repair. Steel rods and clamps shall be protected by galvanizing or by coating with bituminous paint.

3.1.9.2 Restrained Joints

For ductile iron pipe, restrained joints shall be designed by the Contractor or the pipe manufacturer in accordance with DIPRA-01.

3.2 HYDROSTATIC TESTS

Where any section of a water line is provided with concrete thrust blocking for fitting or hydrants, the hydrostatic tests shall not be made until at least 5 days after installation of the concrete thrust blocking, unless otherwise approved.

3.2.1 Pressure Test

After the pipe is laid, the joints completed, fire hydrants permanently installed, and the trench partially backfilled leaving the joints exposed for examination, the newly laid piping or any valved section of piping shall, unless otherwise specified, be subjected for 1 hour to a hydrostatic pressure test of 200 psi. Each valve shall be opened and closed several times during the test. Exposed pipe, joints, fittings, hydrants,and valves shall be carefully examined during the partially open trench test. Joints showing visible leakage shall be replaced or remade as necessary. Cracked or defective pipe, joints, fittings, hydrants and valves, discovered in consequence of this pressure test shall be removed and replaced with sound material, and the test shall be repeated until the test results are satisfactory. The requirement for the joints to remain exposed for the hydrostatic tests may be waived by the Contracting Officer when one or more of the following conditions is encountered:

a. Wet or unstable soil conditions in the trench.

b. Compliance would require maintaining barricades and walkways around and across an open trench in a heavily used area that would require continuous surveillance to assure safe conditions.

c. Maintaining the trench in an open condition would delay completion of the contract.

d. An unforeseeable cause which would result in excess cost. The Contractor may request the waiver, setting forth in writing the reasons for the request and stating the alternative procedure proposed to comply with the required hydrostatic tests. Backfill placed prior to the tests

shall be placed in accordance with the requirements of SECTION: 02222 - EXCAVATION, TRENCHING, AND BACKFILLING FOR UTILITIES SYSTEMS.

3.2.2 Leakage Test

Leakage test shall be conducted after the pressure tests have been satisfactorily completed. The duration of each leakage test shall be at least 2 hours, and during the test the water line shall be subjected to 200 psi pressure. Leakage is defined as the quantity of water to be supplied into the newly laid pipe, or any valved or approved section thereof, necessary to maintain the specified leakage test pressure after the pipe has been filled with water and the air expelled. No piping installation will be accepted until the leakage is less than the number of gallons per hour as determined by the formula:

L = 0.0001351ND(P raised to 1/2 power) for pipe materials

In which L equals the allowable leakage in gallons per hour; N is the number of joints in the length of pipeline tested; D is the nominal diameter of the pipe in inches; and P is the average test pressure during the leakage test, in psi gauge. Should any test of pipe disclose leakage greater than that specified in the foregoing table, the defective joints shall be located and repaired until the leakage is within the specified allowance, without additional cost to the Government.

3.2.3 Time for Making Test

Except for joint material setting or where concrete reaction backing necessitates a 5-day delay, pipelines jointed with rubber gaskets, mechanical or push-on joints, or couplings may be subjected to hydrostatic pressure, inspected, and tested for leakage at any time after partial completion of backfill. Cement-mortar lined pipe may be filled with water as recommended by the manufacturer before being subjected to the pressure test and subsequent leakage test.

3.2.4 Concurrent Hydrostatic Tests

The Contractor may elect to conduct the hydrostatic tests using either or both of the following procedures. Regardless of the sequence of tests employed, the results of pressure tests, leakage tests, and disinfection shall be satisfactory as specified. All replacement, repair or retesting required shall be accomplished by the Contractor at no additional cost to the Government.

a. Pressure test and leakage test may be conducted concurrently.

b. Hydrostatic tests and disinfection may be conducted concurrently, using the water treated for disinfection to accomplish the hydrostatic tests. If water is lost when treated for disinfection and air is admitted to the unit being tested, or if any repair procedure results in contamination of the unit, disinfection shall be reaccomplished.

3.3 DISINFECTION

Before acceptance of potable water operation, each unit of completed waterline shall be disinfected as specified herein. After pressure tests have been made, the unit to be disinfected shall be thoroughly flushed with water until all entrained dirt and mud have been removed before introducing the chlorinating material. The chlorinating material shall be either liquid chlorine, calcium hypochlorite, or sodium hypochlorite, conforming to paragraph "MATERIALS." The chlorinating material shall provide a dosage of not less than 50 ppm and shall be introduced into the

water lines in an approved manner. Polyvinyl Chloride (PVC) pipe lines shall be chlorinated using only the above specified chlorinating material in solution. In no case will the agent be introduced into the line in a dry solid state. The treated water shall be retained in the pipe long enough to destroy all non-spore-forming bacteria. Except where a shorter period is approved, the retention time shall be at least 24 hours and shall produce not less than 25 ppm of free chlorine residual throughout the line at the end of the retention period. All valves on the lines being disinfected shall be opened and closed several times during the contact period. The line shall then be flushed with clean water until the residual chlorine is reduced to less than 1.0 ppm. During the flushing period, each fire hydrant on the line shall be opened and closed several times. From several points in the unit, the Contracting Officer will take samples of water in proper sterilized containers for bacterial examination. The disinfection shall be repeated until tests indicate the absence of pollution for at least 2 full days. The unit will not be accepted until satisfactory bacteriological results have been obtained.

3.4 CLEANUP

Upon completion of the installation of water lines, and appurtenances, all debris and surplus materials resulting from the work shall be removed.

- - o 0 o - -

SECTION 02720 - STORM-DRAINAGE SYSTEM

PART 1 GENERAL

1.1 REFERENCES

The publications listed below form a part of this specification to the extent referenced. The publications are referred to in the text by basic designation only.

AMERICAN SOCIETY FOR TESTING AND MATERIALS (ASTM)

ASTM A 123	(1989a) Zinc (Hot-Dip Galvanized) Coatings on Iron and Steel Products
ASTM A 444	(1989) Steel Sheet, Zinc Coated (Galvanized) by the Hot Dip Process for Storm Sewer and Drainage Pipe
ASTM A 760	(1991) Corrugated Steel Pipe, Metallic-Coated for Sewers and Drains
ASTM A 798	(1988) Installing Factory-Made Corrugated Steel Pipe for Sewers and Other Applications
ASTM D 1556	(1990) Density and Unit Weight of Soil in Place by the Sand-Cone Method.
ASTM D 1557	(1991) Laboratory Compaction Characteristics of Soil Using Modified Effort (56,000 ft-lbf/cu.ft. (2,700 kN-m/cu.m.)), Procedure C.
ASTM D 2922	(1991) Density of Soil and Soil-Aggregate in Place by Nuclear Methods (Shallow Depth)
ASTM D 3017	(1988) Water Content of Soil and Rock in Place by Nuclear Methods (Shallow Depth), Method B.

1.2 SUBMITTALS

The following shall be submitted in accordance with Section 01300 SUBMITTAL DESCRIPTIONS:

SD-06 Instructions

Placing Pipe

Printed copies of the manufacturer's recommendations for installation procedures of the material being placed, prior to installation.

SD-13 Certificates

Certified copies of test reports demonstrating conformance to applicable pipe specifications, before pipe is installed. Certification on the ability of frame and cover or gratings to carry the imposed live load.

1.3 DELIVERY, STORAGE, AND HANDLING

1.3.1 Delivery and Storage

Materials delivered to site shall be inspected for damage, unloaded, and stored with a minimum of handling. Materials shall not be stored directly

on the ground. The inside of pipes and fittings shall be kept free of dirt and debris. Gasket materials and plastic materials shall be protected from exposure to the direct sunlight over extended periods.

1.3.2 Handling

Materials shall be handled in such a manner as to insure delivery to the trench in sound, undamaged condition. Pipe shall be carried to the trench, not dragged.

PART 2 PRODUCTS

2.1 PIPE FOR CULVERTS AND STORM DRAINS

Pipe for culverts and storm drains shall be of the sizes indicated and shall conform to the requirements specified.

2.1.1 Corrugated Steel Pipe

ASTM A 760, zinc coated pipe, Type II pipe with helical corrugations.

2.2 DRAINAGE STRUCTURES

2.2.1 Flared End Sections

Sections shall be of a standard design fabricated from zinc coated steel sheets meeting requirements of ASTM A 444.

PART 3 EXECUTION

3.1 EXCAVATION FOR PIPE CULVERTS, STORM DRAINS, AND DRAINAGE STRUCTURES

Excavation of trenches and for appurtenances and backfilling for culverts and storm drains shall be in accordance with the applicable portions of Section 02222 EXCAVATION, TRENCHING, AND BACKFILLING FOR UTILITIES SYSTEMS and the requirements specified below.

3.1.1 Trenching

The width of trenches at any point below the top of the pipe shall be not greater than the outside diameter of the pipe plus 400 mm (16 inches) for pipe sizes 18-inch or less and 600mm (24 inches) for pipes larger than 18-inches to permit satisfactory jointing and thorough tamping of the bedding material under and around the pipe. Sheeting and bracing where required shall be placed within the trench width as specified. Care shall be taken not to overexcavate. Where trench widths are exceeded, redesign with a resultant increase in cost of stronger pipe or special installation procedures shall be necessary. Cost of this redesign and increased cost of pipe or installation shall be borne by the Contractor without additional cost to the Government.

3.1.2 Removal of Unstable Material

Where wet or otherwise unstable soil incapable of properly supporting the pipe, as determined by the Contracting Officer, is unexpectedly encountered in the bottom of a trench, such material shall be removed to the depth required and replaced to the proper grade with select granular material, compacted as provided in paragraph BACKFILLING. When removal of unstable material is due to the fault or neglect of the Contractor in his performance of shoring and sheeting, water removal, or other specified requirements, such removal and replacement shall be performed at no additional cost to the government.

3.2 BEDDING

The bedding surface for the pipe shall provide a firm foundation of uniform density throughout the entire length of the pipe. When no bedding class is specified or detailed on the drawings, concrete pipe shall be bedded carefully in a soil foundation accurately shaped and rounded to conform to the lowest one-fourth of the outside portion of circular pipe or to the lower curved portion of pipe arch for the entire length of the pipe or pipe arch. When necessary, the bedding shall be tamped. Bell holes and depressions for joints shall be only of such length, depth, and width as required for properly making the particular type of joint.

3.3 PLACING PIPE

Each pipe shall be carefully examined before being laid, and defective or damaged pipe shall not be used. Pipelines shall be laid to the grades and alignment indicated. Proper facilities shall be provided for lowering sections of pipe into trenches. Lifting lugs in vertically elongated metal pipe shall be placed in the same vertical plane as the major axis of the pipe. Under no circumstances shall pipe be laid in water, and no pipe shall be laid when trench conditions or weather are unsuitable for such work. Diversion of drainage or dewatering of trenches during construction shall be provided as necessary. All pipe in place shall be inspected before backfilling, and those pipes damaged during placement shall be removed and replaced.

3.3.1 Corrugated Metal Pipe and Pipe Arch

Laying shall be with the separate sections joined firmly together, with the outside laps of circumferential joints pointing upstream, and with longitudinal laps on the sides. Interior coating shall be protected against damage from insertion or removal of struts or tie wires. Lifting lugs shall be used to facilitate moving pipe without damage to exterior or interior coatings. Vertical elongation, where indicated, shall be accomplished by factory elongation. Suitable markings or properly placed lifting lugs shall be provided to insure placement of factory elongated pipe in a vertical plane.

3.3.2 Multiple Culverts

Where multiple lines of pipe are installed, adjacent sides of pipe shall be at least half the nominal pipe diameter or 1 meter (3 feet) apart, whichever is less.

3.4 JOINTS

3.4.1 Corrugated Metal Pipe Field Joints

Transverse field joints shall be of such design that the successive connection of pipe sections will form a continuous line free of appreciable irregularities in the flow line. In addition, the joints shall meet the general performance requirements described in ASTM A 798. Suitable transverse field joints which satisfy the requirements for one or more of the joint performance categories can be obtained with the following types of connecting bands furnished with suitable band-end fastening devices: corrugated bands, bands with projections, flat bands, and bands of special design that engage factory preformed ends of corrugated pipe. The space between the pipe and connecting bands shall be kept free from dirt and grit so that corrugations fit snugly. The connecting band, while being tightened, shall be tapped with a soft-head mallet of wood, rubber or plastic, to take up slack and insure a tight joint. Field joints for each type of corrugated metal pipe shall maintain pipe alignment during

construction and prevent infiltration of fill material during the life of the installations. The type, size, and sheet thickness of the band and the size of angles or lugs and bolts shall be as indicated or where not indicated, shall be as specified in the applicable standards or specifications for the pipe.

3.5 DRAINAGE STRUCTURES

Flared End Sections

Construction shall be as indicated.

3.6 BACKFILLING

3.6.1 Backfilling Pipe in Trenches

After the pipe has been properly bedded, selected material from excavation or borrow, at a moisture content that will facilitate compaction, shall be placed along both sides of pipe in layers not exceeding 150 mm (6 inches) in compacted depth. The backfill shall be brought up evenly on both sides of pipe for the full length of pipe. Care shall be taken to insure thorough compaction of the fill under the haunches of the pipe. Each layer shall be thoroughly compacted with mechanical tampers or rammers. This method of filling and compacting shall continue until the fill has reached an elevation of at least 300 mm (12 inches) above the top of the pipe. The remainder of the trench shall be backfilled and compacted by spreading and rolling or compacted by mechanical rammers or tampers in layers not exceeding 150 millimeters. (6 inches.) Tests for density will be made as necessary to insure conformance to the compaction requirements specified elsewhere in this paragraph.

3.6.2 Backfilling Pipe in Fill Sections

For pipe placed in fill sections, backfill material and the placement and compaction procedures shall be as specified elsewhere in this paragraph. The fill material shall be uniformly spread in layers longitudinally on both sides of the pipe, not exceeding 150 mm (6 inches) in compacted depth, and shall be compacted by rolling parallel with pipe or by mechanical tamping or ramming. Prior to commencing normal filling operations, the crown width of the fill at a height of 300 mm (12 inches) above the top of the pipe shall extend a distance of not less than twice the outside pipe diameter on each side of the pipe or 4 m, (12 feet,) whichever is less. After the backfill has reached at least 300 mm (12 inches) above the top of the pipe, the remainder of the fill shall be placed and thoroughly compacted in layers not exceeding 150 mm. (6 inches.)

3.6.3 Movement of Construction Machinery

In compacting by rolling or operating heavy equipment parallel with the pipe, displacement of or injury to the pipe shall be avoided. Movement of construction machinery over a culvert or storm drain at any stage of construction shall be at the Contractor's risk. Any damaged pipe shall be repaired or replaced.

3.6.4 Compaction

3.6.4.1 General

Cohesionless materials include gravels, gravel-sand mixtures, sands, and gravelly sands. Cohesive materials include clayey and silty gravels, gravel-silt mixtures, clayey and silty sands, sand-clay mixtures, clays, silts, and very fine sands. When results of compaction tests for

moisture-density relations are recorded on graphs, cohesionless soils will show straight lines or reverse-shaped moisture-density curves, and cohesive soils will show normal moisture-density curves.

3.6.4.2 Minimum Density

Backfill over and around the pipe and backfill around and adjacent to drainage structures shall be compacted at the approved moisture content to the following applicable minimum density (densities) which will be determined as specified in this paragraph.

a. Under paved roads, streets, parking areas, and similar-use pavements including adjacent shoulder areas, the density shall be not less than 90 percent of maximum density for cohesive material and 95 percent of maximum density for cohesionless material, up to the elevation where requirements for pavement subgrade materials and compaction shall control.

b. Under unpaved or turfed traffic areas, density shall not be less than 90 percent of maximum density for cohesive material and 95 percent of maximum density for cohesionless material.

c. Under nontraffic areas, density shall be not less than that of the surrounding material.

3.6.5 Determination of Density

Testing shall be the responsibility of the Contractor and performed at no additional cost to the Government. Testing shall be performed by a Government approved commercial testing laboratory. Tests shall be performed in sufficient number to insure that specified density is being obtained. Laboratory tests for moisture-density relations shall be made in accordance with ASTM D 1557 except that mechanical tampers may be used provided the results are correlated with those obtained with the specified hand tamper. Field density tests shall be determined in accordance with ASTM D 1556 or ASTM D 2922. When ASTM D 2922 is used, one check test by ASTM D 1556 shall be performed for every fourth test performed by the nuclear method (ASTM D 2922, Method B). ASTM D 2922 results in a wet unit weight of soil and when using this method ASTM D 3017 shall be used to determine the moisture content of the soil. The calibration curves furnished with the moisture gauges shall be checked along with density calibration checks as described in ASTM D 3017 or ASTM D 2922. Test results shall be furnished the Contracting Officer. The calibration checks of both the density and moisture gauges shall be made at the beginning of a job on each different type of material encountered and at intervals as directed.

- - o 0 o - -

SECTION 02730 - SANITARY SEWERS

PART 1 - GENERAL

1.1 WORK INCLUDED

Pipes, materials, and appurtenances for gravity sewers.

1.2 REFERENCES

The publications listed below form a part of this specification to the extent referenced. The publications are referred to in the text by basic designation only.

AMERICAN SOCIETY FOR TESTING AND MATERIALS (ASTM)

ASTM A 123	(1989a) Zinc (Hot-Dip Galvanized) Coatings on Iron and Steel Products
ASTM C 33	(1990) Concrete Aggregates
ASTM C 94	(1990) Ready-Mixed Concrete
ASTM C 150	(1989) Portland Cement
ASTM C 260	(1986) Air-Entraining Admixtures for Concrete
ASTM C 270	(1989) Mortar for Unit Masonry
ASTM C 478	(1990b) Precast Reinforced Concrete Manhole Sections
ASTM C 828	(1990) Low-Pressure Air Test of Vitrified Clay Pipe Lines
ASTM C 924	(1989) Concrete Pipe Sewer Lines by Low-Pressure Air Test Method
ASTM D 2680	(1990) Acrylonitrile-Butadiene-Styrene (ABS) and Poly(Vinyl Chloride) (PVC) Composite Sewer Piping
ASTM D 2751	(1989) Acrylonitrile-Butadiene-Styrene (ABS) Sewer Pipe and Fittings
ASTM D 3034	(1989) Type PSM Poly(Vinyl Chloride) (PVC) Sewer Pipe and Fittings
ASTM D 3212	(1989) Joints for Drain and Sewer Plastic Pipes Using Flexible Elastomeric Seals
ASTM D 3753	(1981; R 1986) Glass-Fiber-Reinforced Polyester Manholes
ASTM F 402	(1988) Safe Handling of Solvent Cements, Primers, and Cleaners Used for Joining Thermoplastic Pipe and Fittings

ASTM F 794	(1989a) Poly(Vinyl Chloride) (PVC) Ribbed Gravity Sewer Pipe and Fittings Based on Controlled Inside Diameter
ASTM F 949	(1989) Poly(Vinyl Chloride) (PVC) Corrugated Sewer Pipe with a Smooth Interior and Fittings

FEDERAL SPECIFICATIONS (FS)

FS RR-F-621	(Rev E) Frames, Covers, Gratings, Steps, Sump and Catch Basin, Manhole

NATIONAL FIRE PROTECTION ASSOCIATION (NFPA)

NFPA 49	(1975) Hazardous Chemicals Data
NFPA 325M	(1991) Fire Hazard Properties of Flammable Liquids, Gases, and Volatile Solids
NFPA 704	(1990) Identification of the Fire Hazards of Materials

UNI-BELL PVC PIPE ASSOCIATION (UBPPA)

UBPPA UNI-B-9	(1990) Polyvinyl Chloride (PVC) Profile Wall Gravity Sewer Pipe and Fittings Based on Controlled Inside Diameter (Nominal Pipe Sizes 4-48 inch)

1.3 GENERAL REQUIREMENTS

The construction required herein shall include appurtenant structures and building sewers to points of connection with the building drains 5 feet outside the building to which the sewer system is to be connected. The Contractor shall replace damaged material and redo unacceptable work at no additional cost to the Government. Excavation and backfilling is specified in Section 02222 EXCAVATION, TRENCHING, AND BACKFILLING FOR UTILITIES SYSTEMS. Backfilling shall be accomplished after inspection by the Contracting Officer. Before, during, and after installation, plastic pipe and fittings shall be protected from any environment that would result in damage or deterioration to the material. The Contractor shall have a copy of the manufacturer's instructions available at the construction site at all times and shall follow these instructions unless directed otherwise by the Contracting Officer. Solvents, solvent compounds, lubricants, elastomeric gaskets, and any similar materials required to install the plastic pipe shall be stored in accordance with the manufacturer's recommendation and shall be discarded if the storage period exceeds the recommended shelf life. Solvents in use shall be discarded when the recommended pot life is exceeded.

1.4 SUBMITTALS

The following shall be submitted in accordance with Section 01300 - SUBMITTALS:

SD-01 Data

Manufacturer's Catalog Data.

SD-09 Reports

Test Reports.

SD-13 Certificates

Portland Cement.

Certificates of compliance stating the type of cement used in manufacture of concrete pipe, fittings and precast manholes.

PART 2 - PRODUCTS

2.1 PIPE

Pipe shall conform to the respective specifications and other requirements specified below.

2.1.1 Plastic Pipe

Acrylonitrile-butadiene-styrene (ABS) and Polyvinyl chloride (PVC) composite sewer piping shall conform to ASTM D 2680. Size 8-inch through 15-inch diameter.

2.1.1.1 ABS Pipe

ASTM D 2751.

2.1.1.2 PVC Pipe

ASTM D 3034, Type PSM with a maximum SDR of 35, Size 15 inches or less in diameter. ASTM F 949 for corrugated sewer pipes with a smooth interior. UBPPA UNI-B-9 and ASTM F 794, Series 46, for ribbed sewer pipe with smooth interior, size 8-inch through 48-inch diameters.

2.2 FITTINGS

Fittings shall be compatible with the pipe supplied and shall have a strength not less than that of the pipe. Fittings shall conform to the respective specifications and other requirements specified below.

2.2.1 Plastic Pipe

ABS and PVC composite sewer pipe fittings shall conform to ASTM D 2680.

2.2.1.1 ABS Pipe

ASTM D 2751.

2.2.1.2 PVC Pipe

ASTM D 3034 for type PSM pipe. ASTM F 949 for corrugated sewer pipe with a smooth interior and fittings of 4, 6, 8, and 10 inches in diameter. UBPPA UNI-B-9 and ASTM F 794, Series 46, for ribbed sewer pipe with smooth interior.

2.2.2.3 PVC Pipe to Wall Penetrations

Wall penetrations for PVC pipe shall be sealed watertight by use of either mechanical seals as specified in Section 15060 PROCESS PIPING, Manhole waterstop rings, or approved equal.

2.3 JOINTS

Joints installation shall comply with the manufacturer's instructions.

2.3.1 Plastic Pipe

2.3.1.1 ABS Pipe

ASTM D 2751, solvent weld or bell and spigot O-ring joint, size 12 inches or less in diameter, dimensions and tolerances in accordance with Table 2 therein.

2.3.1.2 PVC Pipe

Flexible elastomeric gasket joint conforming to ASTM D 3212 for Type PSM pipe.

2.4 BRANCH CONNECTIONS

Branch connections shall be made by use of regular fittings or solvent cemented saddles as approved. Saddles for ABS and PVC composite pipe shall conform to Figure 2 of ASTM D 2680; saddles for ABS pipe shall comply with Table 3 of ASTM D 2751; and saddles for PVC pipe shall conform to Table 4 of ASTM D 3034.

2.5 FRAMES AND COVERS

Frames and covers shall be cast iron, ductile iron or reinforced concrete. Cast iron frames and covers shall be as indicated or shall conform to FS RR-F-621, type as suitable for the application, circular, without vent holes. The frames and covers shall have a combined weight of not less than 400 pounds. Reinforced concrete frames and covers shall be as indicated. The word "Sewer" shall be stamped or cast into covers so that it is plainly visible.

2.6 STEEL LADDER

A steel ladder shall be provided where the depth of a manhole exceeds 12 feet. The ladder shall not be less than 16 inches in width, with 3/4 inch diameter rungs spaced 12 inches apart. The two stringers shall be a minimum 3/8 inch thick and 2 inches wide. Ladders and inserts shall be galvanized after fabrication in conformance with ASTM A 123.

2.7 CEMENT MORTAR

Cement mortar shall conform to ASTM C 270, Type M with Type II cement.

2.7.1 Portland Cement

Portland cement shall conform to ASTM C 150, Type V for concrete used in concrete pipe, concrete pipe fittings, and manholes and type optional with the Contractor for cement used in concrete cradle, concrete encasement, and thrust blocking. Air-entraining admixture conforming to ASTM C 260 shall be used with Type V cement. Where aggregates are alkali reactive, as determined by Appendix XI of ASTM C 33, a cement containing less than 0.60 percent alkalies shall be used.

2.7.2 Portland Cement Concrete

Portland cement concrete shall conform to ASTM C 94, compressive strength of 4000 psi at 28 days, except for concrete cradle and encasement or concrete blocks for manholes. Concrete used for cradle and encasement

shall have a compressive strength of 2500 psi minimum at 28 days. Concrete in place shall be protected from freezing and moisture loss for 7 days.

2.8 STRUCTURES

2.8.1 Precast Reinforced Concrete Manhole Sections

Precast reinforced concrete manhole sections shall conform to ASTM C 478, except that portland cement shall be as specified herein. Joints shall be cement mortar, or an approved mastic or rubber gasket, or an approved combination of these types.

2.8.2 Glass-Fiber Reinforced Polyester Manholes

Glass-fiber-reinforced polyester manholes shall conform to ASTM D 3753.

PART 3 - EXECUTION

3.1 INSTALLATION

3.1.1 Adjacent Facilities

3.1.1.1 Water Lines

Where the location of the sewer is not clearly defined by dimensions on the drawings, the sewer shall not be closer horizontally than 10 feet to a water-supply main or service line, except that where the bottom of the water pipe will be at least 12 inches above the top of the sewer pipe, the horizontal spacing may be a minimum of 6 feet. Where gravity-flow sewers cross above water lines, the sewer pipe for a distance of 10 feet on each side of the crossing shall be fully encased in concrete or shall be acceptable pressure pipe with no joint closer horizontally than 3 feet to the crossing. The thickness of the concrete encasement including that at the pipe joints shall be not less than 4 inches.

3.1.1.2 Roads, Railroads, and Airfields

Water pipe shall be encased in a sleeve of rigid conduit for the lengths shown. A minimum clearance of at least 2 inches between the inner wall of the sleeve and the maximum outside diameter of the sleeved pipe and joints shall be provided. Sand bedding shall be provided for the water pipe through the sleeve. Sleeves of ferrous material shall be provided with the corrosion protection as required for the conditions encountered at the site of installation.

3.1.1.3 Structures

Where sewer pipe is to be installed within 3 feet of an existing or proposed building or structural foundation such as a retaining wall, control tower footing, water tank footing, or any similar structure, the sewer pipe shall be sleeved as specified above. Care shall be exercised and proper precautions taken during installation of the sewer pipe and sleeve to assure that there will be no damage to such structures and no settlement or movement of foundations or footing.

3.1.2 Pipe Laying

a. Pipe shall be protected during handling against impact shocks and free fall and the pipe interior shall be free of extraneous material.

b. Pipe laying shall proceed upgrade with the spigot ends of bell-and-spigot pipe and tongue ends of tongue-and-groove pipe pointing in the direction of the flow. Each pipe shall be laid accurately to the line and grade shown on the drawings. Pipe shall be laid and centered so that the sewer has a uniform invert. As the work progresses, the interior of the sewer shall be cleared of all superfluous materials.

c. Before making pipe joints all surfaces of the portions of the pipe to be joined shall be clean and dry. Lubricants, primers, and adhesives shall be used as recommended by the pipe manufacturer. The joints shall then be placed, fitted, joined, and adjusted to obtain the degree of water tightness required.

d. ABS composite pipe ends with exposed truss and filler material shall be coated with solvent weld material before making the joint to prevent water or air passage at the joint between the inner and outer wall of the pipe.

e. Installations of solvent weld joint pipe, using ABS or PVC pipe and fittings shall be in accordance with ASTM F 402. All required precautions shall be taken to assure adequate trench ventilation and protection for workers installing the pipe.

3.1.2.1 Caulked Joints

The packing material shall be well packed into the annular space to prevent the entrance of lead into the pipe. The remainder of the space shall be filled with molten lead that is hot enough to show a rapid change in color when stirred. Scum shall be removed before pouring. The lead shall be caulked to form a tight joint without overstraining the bell and shall have a minimum depth of 1 inch after caulking.

3.1.2.2 Trenches

Trenches shall be kept free of water and as dry as possible during bedding, laying, and jointing and for as long a period as required. When work is not in progress, open ends of pipe and fittings shall be satisfactorily closed so that no trench water or other material will enter the pipe or fittings.

3.1.2.3 Backfill

As soon as possible after the joint is made, sufficient backfill material shall be placed along the pipe to prevent pipe movement off line or grade. Plastic pipe shall be completely covered to prevent damage from ultraviolet light.

3.1.2.4 Width of Trench

If the maximum width of the trench at the top of the pipe, as specified in Section 02222 EXCAVATION, TRENCHING, AND BACKFILLING FOR UTILITIES SYSTEMS, is exceeded for any reason other than by direction, the Contractor shall install at no additional cost to the Government such concrete cradling, pipe encasement, or other bedding required to support the added load of the backfill.

3.1.2.5 Joints

Joints between different pipe materials shall be made as specified, using approved jointing materials.

3.1.2.6 Handling and Storage

Pipe, fittings and joint material shall be handled and stored in accordance with the manufacturer's recommendations. Storage facilities for plastic pipe, fittings, joint materials and solvents shall be classified and marked in accordance with NFPA 704, with classification as indicated in NFPA 49 and NFPA 325M.

3.1.3 Leakage Tests

Lines shall be tested for leakage by low pressure air testing, infiltration tests or exfiltration tests, as appropriate. Low pressure air testing for vitrified clay pipes shall be as prescribed in ASTM C 828. Low pressure air testing for concrete pipes shall be as prescribed in ASTM C 828. Low pressure air testing procedures for other pipe materials shall use the pressures and testing times prescribed in ASTM C 828 and ASTM C 924, after consultation with the pipe manufacturer. Prior to infiltration or exfiltration tests the trench shall be backfilled up to at least the lower half of the pipe. If required, sufficient additional backfill shall be placed to prevent pipe movement during testing, leaving the joints uncovered to permit inspection. Visible leaks encountered shall be corrected regardless of leakage test results. When the water table is 2 feet or more above the top of the pipe at the upper end of the pipeline section to be tested, infiltration shall be measured using a suitable weir or other device acceptable to the Contracting Officer. When the Contracting Officer determines that infiltration cannot be properly tested, an exfiltration test shall be made by filling the line to be tested with water so that a head of at least 2 feet is provided above both the water table and the top of the pipe at the upper end of the pipeline to be tested. The filled line shall be allowed to stand until the pipe has reached its maximum absorption, but not less than 4 hours. After absorption, the head shall be re-established. The amount of water required to maintain this water level during a 2-hour test period shall be measured. Leakage as measured by either the infiltration test or exfiltration test shall not exceed 0.2 gallons per inch diameter per 100 feet of pipeline per hour. When leakage exceeds the maximum amount specified, satisfactory correction shall be made and retesting accomplished. Testing, correction, and retesting shall be made at no additional cost to the Government.

3.1.4 Test for Deflection

When flexible pipe is used, a deflection test shall be made on the entire length of the installed pipeline not less than 30 days after the completion of all work including the leakage test, backfill, and placement of any fill, grading, paving, concrete, or superimposed loads. Deflection shall be determined by use of a deflection device or by use of a spherical, spheroidal, or elliptical ball, a cylinder, or circular sections fused to a common shaft. The ball, cylinder, or circular sections shall have a diameter, or minor diameter as applicable, of 92.5 percent of the inside diameter of the pipe. A tolerance of plus 0.5 percent will be permitted. The ball, cylinder, or circular sections shall be of a homogeneous material throughout, shall have a density greater than 1.0 as related to water at 39.2 degrees F, and shall have a surface brinell hardness of not less than 150. It shall be center bored and through bolted with a 1/4-inch minimum diameter steel shaft having a yield strength of 70,000 psi or more, with eyes at each end for attaching pulling cables. The eye shall be suitably backed with flange or heavy washer such that a pull exerted on the opposite end of the shaft shall produce compression throughout the remote end of the ball, cylinder or circular section. Circular sections shall be so spaced that the distance from the external faces of the front and back sections shall equal or

exceed the diameter of the circular section. Failure of the ball, cylinder, or circular section to pass freely through a pipe run, either by being pulled through or by being flushed through with water, shall be cause for rejection of that run. When a deflection device is used for the test in lieu of the ball, cylinder, or circular sections described, such device shall be approved prior to use. The device shall be sensitive to 1.0 percent of the diameter of the pipe being measured and shall be accurate to 1.0 percent of the indicated dimension. Installed pipe showing deflections greater than 7.5 percent of the normal diameter of the pipe shall be retested by a run from the opposite direction. If the retest also fails, the suspect pipe shall be replaced at no cost to the Government.

3.2 CONCRETE CRADLE AND ENCASEMENT

The pipe shall be supported on a concrete cradle, or encased in concrete where indicated or directed.

3.3 WYE BRANCHES

Wye branches shall be installed where sewer connections are indicated or where directed. Cutting into piping for connections shall not be done except in special approved cases. When the connecting pipe cannot be adequately supported on undisturbed earth or tamped backfill, the pipe shall be encased in concrete backfill or supported on a concrete cradle as directed. Concrete required because of conditions resulting from faulty construction methods or negligence by the Contractor shall be installed at no additional cost to the Government. The installation of wye branches in an existing sewer shall be made by a method which does not damage the integrity of the existing sewer. One acceptable method consists of removing one pipe section, breaking off the upper half of the bell of the next lower section and half of the running bell of wye section. After placing the new section, it shall be rotated so that the broken half of the bell will be at the bottom. The two joints shall then be made with joint packing and cement mortar.

3.4 MANHOLES

3.4.1 General

Manholes shall be constructed of glass-fiber-reinforced polyester, prefabricated plastic, concrete, or precast concrete manhole sections. The invert channels shall be smooth and semicircular in shape conforming to the inside of the adjacent sewer section. Changes in direction of flow shall be made with a smooth curve of as large a radius as the size of the manhole will permit. Changes in size and grade of the channels shall be made gradually and evenly. The invert channels shall be formed directly in the concrete of the manhole base, or shall be built up with brick and mortar, or shall be half tile laid in concrete, or shall be constructed by laying full section sewer pipe through the manhole and breaking out the top half after the surrounding concrete has hardened. Pipe connections shall be made to manhole using water stops, standard O-ring joints, special manhole coupling, or shall be made in accordance with the manufacturer's recommendation. The Contractor's proposed method of connection, list of materials selected, and specials required, shall be approved prior to installation. The floor of the manhole outside the channels shall be smooth and shall slope toward the channels not less than 1 inch per foot nor more than 2 inches per foot. Free drop inside the manholes shall not exceed 1 foot 6 inches, measured from the invert of the inlet pipe to the top of the floor of the manhole outside the channels, and drop manholes shall be constructed whenever the free drop would otherwise be greater than 1 foot 6 inches.

3.4.2 Steel Ladder

Ladder shall be adequately anchored to the wall by means of steel inserts spaced not more than 6 feet apart vertically, and shall be installed to provide at least 6 inches of space between the wall and the rungs. The wall along the line of the ladder shall be vertical for its entire length.

3.4.3 Jointing and Plastering

Mortar joints shall be completely filled and shall be smooth and free from surplus mortar on the inside of the manhole. Mortar and mastic joints between precast rings shall be full-bedded in jointing compound and shall be smoothed to a uniform surface on both the interior and exterior of the manhole. Installation of rubber gasket joints between precast rings shall be in accordance with the recommendations of the manufacturer.

3.4.4 Frames and Covers

Unless otherwise indicated, tops of frames and covers shall be set flush with finished grade in paved areas or 2 inches higher than finished grade in unpaved areas.

3.5 CONNECTIONS TO EXISTING MANHOLES

Pipe connections to existing manholes shall be made in such manner that the finish work will conform as nearly as practicable to the essential applicable requirements specified for new manholes, including all necessary concrete work, cutting, and shaping. The connection shall be centered on the manhole. Holes for the new pipe shall be of sufficient diameter to allow packing cement mortar around the entire periphery of the pipe but no larger than 1-1/2 times the diameter of the pipe. Cutting the manhole shall be done in a manner that will cause the least damage to the walls.

3.6 BUILDING CONNECTIONS

Building connections shall include the lines to and connection with the building waste drainage piping at a point approximately 5 feet outside the building, unless otherwise indicated. Where building drain piping is not installed, the Contractor shall terminate the building connections approximately 5 feet from the site of the building at a point and in a manner designated.

3.7 CLEANOUTS AND OTHER APPURTENANCES

Cleanouts and other appurtenances shall be installed where shown on the drawings or as directed by the Contracting Officer, and shall conform to the detail of the drawings.

- - o 0 o - -

SECTION 02831 - FENCE, CHAIN-LINK

PART 1 - GENERAL

1.1 REFERENCES

The publications listed below form a part of this specification to the extent referenced. The publications are referred to in the text by basic designation only.

AMERICAN SOCIETY FOR TESTING AND MATERIALS (ASTM)

ASTM C 94	(1986; Rev. b) Ready-Mixed Concrete.

FEDERAL SPECIFICATIONS (FS)

FS QQ-W-461	(Rev. H) Wire, Steel, Carbon (Round, Bare and Coated).
FS FF-P-101	(Rev. F) Padlocks.
FS RR-F-191	(Rev. J) Fencing, Wire and Post Metal And Gates, Chain-Link Fence Fabric, and Accessories (General Specification).
FS RR-F-191/1	(Rev. C) Fencing, Wire and Post, Metal (Chain-Link Fence Fabric) (Detail Specification).
FS RR-F-191/2	(Rev. C) Fencing, Wire and Post, Metal (Chain-Link Fence Gates) (Detail Specification).
FS RR-F-191/3	(Rev. C) Fencing, Wire and Post, Metal (Chain-Link Fence Posts, Top Rails and Braces) (Detail Specification).
FS RR-F-191/4	(Rev. C) Fencing, Wire and Post, Metal (Chain-Link Fence Accessories Detail Specification).

1.2 SUBMITTALS

The following shall be submitted in accordance with SECTION: 01300 - SUBMITTALS:

SD-31, Detail Drawings

Drawings shall show post sizes and sections; post setting and bracing, gate details; details of attachment of fabric to support members; and any other details required to erect the fence along the lines indicated.

PART 2 - PRODUCTS

2.1 MATERIALS

Materials shall conform to the following:

2.1.1 Chain Link Fence

FS RR-F-191 and detailed specifications forming the various parts thereto.

2.1.1.1 Fabric

FS RR-F-191/1, Type I, zinc-coated steel wire with minimum coating weight of 2.0 ounces of zinc per square foot of coated surface, or Type II, aluminum-coated steel wire. Fabric shall be fabricated of 9-gauge wire woven in 2-inch mesh. Fabric height shall be 6 feet.

2.1.1.2 Gates

FS RR-F-191/2. Gate shall be the type and swing shown. Gate frames shall be constructed of Class 1 Grade A or B, steel pipe, size SP2, as specified in FS RR-F-191/3. Gate fabric shall be as specified for chain-link fabric. Vertical members of gate leaves shall be spaced so that no members are more than 8 feet apart. Gates over 10 feet wide shall be additionally braced with a 5/16-inch, minimum thickness, diagonal truss rod. Gate fabric shall be attached to the gate frame by method standard with the manufacturer except that welding will not be permitted. Latches, hinges, stops, keepers, rollers, and other hardware items shall be furnished as required for the operation of the gate. Latches shall be arranged for padlocking so that padlock will be accessible from both sides of the gate regardless of the latching arrangement.

2.1.1.3 Posts

FS RR-F-191/3, zinc-coated; Class 1 Grade A or B, steel pipe; Class 3, formed steel sections; or Class 6, steel square sections. Class 4, steel H-section may be used for line posts in lieu of line post shapes specified for the other classes. Sizes shall be as specified in FS RR-F-191/3 for the class used. Line posts shall be of the same class throughout the fence. Terminal (corner, gate, and pull) posts selected shall be of the same class throughout the fence. Gate post shall be either round or square, subject to the limitation specified in FS RR-F-191/3.

2.1.1.4 Braces

FS RR-F-191/3, zinc-coated; Class 1 Grade A or B, steel pipe, size SP1 Class 3, form steel sections, size FS1, conforming to FS RR-F-191/3, may be used as braces if Class 3 line posts are furnished.

2.1.1.5 Accessories

FS RR-F-191/4, unless otherwise specified. Ferrous accessories shall be zinc- or aluminum-coated. Truss rods shall be furnished for each terminal post. Truss rods shall be provided with turnbuckles or other equivalent provisions for adjustment.

2.1.2 Concrete

ASTM C 94, using 3/4-inch maximum-size aggregate, and having minimum compressive strength of 2000 psi at 28 days. Grout shall consist of one part portland cement to three parts clean, well-graded sand and the minimum amount of water to produce a workable mix.

2.1.3 Padlocks

FS FF-P-101, Type EPB, Size 1-3/4 inch. Padlocks shall be keyed alike and each lock shall be furnished with two keys.

2.1.4 Tie Wire

Steel, zinc-coated, hard tensile strength, conforming to Fed. Spec. QQ-W-461, Finish 5, Class 3, weighing a minimum of 0.8 ounces per square foot.

Use 9-gage wire (0.148-inch diameter) or 6-gage (0.192-inch diameter) steel wire clips for attaching fabric to top rails or intermediate posts.

2.1.5 Hog Rings:

Zinc-coated steel of the quality specified for the wire. Use 11-gage (0.121-inch diameter) steel wire hog rings for attaching fabric to top and bottom reinforcing wires.

PART 3 - EXECUTION

3.1 GENERAL

Fence shall be installed to the lines and grades indicated. The area on either side of the fence line shall be cleared to the extent indicated. Line post shall be spaced equidistant at intervals not exceeding 10 feet. Terminal (corner, gate, and pull) posts shall be set at abrupt changes in vertical and horizontal alignment. Fabric shall be continuous between terminal posts, however, runs between terminal posts shall not exceed 500 feet.

3.2 POSTS

Posts shall be set plumb and in alignment. Except where solid rock is encountered, posts shall be set in concrete to the depth of 36 inches. Where solid rock is encountered with no overburden, posts shall be set to a minimum depth of 18 inches in rock. where solid rock is covered with an overburden of soil or loose rock, posts shall be set to a minimum depth of 36 inches unless a penetration of 18 inches in solid rock is achieved before reaching the 36-inch depth in which case depth of penetration shall terminate. All portions of posts set in rock shall be grouted. Portions of posts not set in rock shall be set in concrete from the rock to ground level. Posts set in concrete shall be set in holes not less than 16 inches in diameter for terminal post and 12 inches in diameter for line posts. Diameters of holes in solid rock shall be at least 1-inch greater than the largest cross section of the post. Concrete and grout shall be thoroughly consolidated around each post so as to be free of voids and finished to form a dome. Concrete and grout shall be allowed to cure for 72 hours prior to attachment of any item to the posts. Class 3 type line posts may be mechanically driven provided soil conditions are such that the driven posts develop strengths at least equal to posts set in concrete and rock is not encountered. Driven posts shall be set to a minimum depth of 3 feet and shall be protected with drive caps when being set.

3.3 BRACES AND TRUSS RODS

Braces and truss rods shall be installed as required and in conformance with the standard practice for the fence furnished. Hor Braces and truss rods shall extend from terminal posts to line posts. Diagonal braces shall form an angle of approximately 40 to 50 degrees with the horizontal.

3.4 TENSION WIRES

Tension wires shall be installed along the top and bottom of the fence line and attached to the terminal posts of each stretch of the fence. Top tension wires shall be installed within the top 1-foot of the installed fabric. Bottom tension wire shall be installed within the bottom 6 inches of the installed fabric. Tension wire shall be pulled taut and shall be free of sag.

3.5 CHAIN-LINK FABRIC

Chain-link fabric shall be installed on the side of the post indicated. Fabric shall be attached to terminal posts with stretcher bars and tension bands. Bands shall be spaced at approximately 15-inch intervals. Fabric shall be pulled taut to provide a smooth uniform appearance free from sag. Fabric shall be fastened to line posts at approximately 15-inch intervals and fastened to top rails and tension wires at approximately 24-inch intervals. Fabric shall be cut by untwisting and removing pickets. Splicing shall be accomplished by weaving a single picket into the ends of the rolls to be joined. The bottom of the installed fabric shall be 2 inches (plus or minus 1/2-inch) above the ground. The steel wire ties and hog rings shall be installed in a manner to prevent easy removal and with zinc coating intact after installation.

3.6 GATES

Gates shall be installed at the locations shown. Hinged gates shall be mounted to swing as indicated. Latches, stops, and keepers shall be installed as required. Padlocks shall be attached to gates or gate posts with chains to prevent padlock removal.

- - o O o - -

SECTION 02965 - REVEGETATION AND EROSION CONTROL

PART 1 - GENERAL

1.1 APPLICABLE PUBLICATIONS.

Are listed below and form a part of this specification to the extent referenced. The publications are referred to in the text by the basic designation only.

Association of Official Analytical Chemists (AOAC) Publication:

Official Methods of Analysis (13th Edition 1980 and Supplements 1 & 2).

1.2 GENERAL.

The seeding work will be accomplished only when satisfactory results can be expected. When conditions such as drought, excessive moisture, high winds or other factors prevail to such an extent that satisfactory results are not anticipated, the Contracting Officer may, at his discretion, stop any phase of the work. Work will resume only when, at the discretion of the Contracting Officer, the desired results are likely to be obtained. All seeding will be conducted across the slope. Seeding measures will be accomplished as specified herein.

1.3 FERTILIZING, SEEDING, AND MULCHING.

Are required under this contract and will be accomplished on the areas specified in the contract plans and described in these specifications. Outcroppings of rock, rock cuts, rock fills, concrete structures, and areas of rock protection will be avoided.

1.4 PLANTING SEASON.

Seeding will be performed from the middle of June until the first week in July. Seeding will be accomplished on those project features that are complete as of this time unless otherwise approved by the Contracting Officer. If the Contracting Officer determines that work under this contract has not progressed sufficiently on an area to allow efficient performance or in any way prevent satisfactory results, seeding may be delayed until the next appropriate planting season.

1.5 SUBMITTALS

The following shall be submitted in accordance with Section 01300-Submittals:

SD-01 Data

Submittals which provide calculations, descriptions, or documentation regarding the work.

SD-13 Certificates

Statement signed by an official authorized to certify on behalf of the manufacturer of a product, system or material, attesting that the product, system or material meets specified requirements. The statement must be dated after the award of this contract, must state the Contractor's name and address, must name the project and location, and must list the specific requirements which are being certified.

SD-14 Samples

Samples, including both fabricated and unfabricated physical examples of materials, products, and units of work as complete units or as portions of units of work.

SD-18 Records

Documentation to record compliance with technical or administrative requirements.

PART 2 - PRODUCTS

2.1 MATERIALS.

2.1.1 Fertilizer.

Will be applied to all areas at a rate of 40 pounds of available nitrogen (ammonium sulfate with a urea formaldehyde base) and 50 pounds of available phosphorous (usually expressed as phosphorus pentoxide) per acre. Fertilizer will be granular and uniform in composition, free flowing, and suitable for application with approved equipment. The fertilizer will be delivered to the site in plastic bags or other suitable containers, each fully labeled, conforming to the applicable State fertilizer laws, and bearing the name, trade name or trade mark, and warranty of the producer.

2.1.2 Seed Mixtures.

Must be certified, locally-adapted strains or varieties as shown in Table 1. Seed with the higher Pure Live Seed (PLS*) will be purchased. All seeding rates and pounds of seed needed in mixture per acre will be adjusted to the PLS purchased.

* Pure Live Seed (PLS) is determined by multiplying the germination of a lot of seed by the purity. For example, a 100-pound bag of seed with a germination of 50 percent and purity of 80 percent would be computed as follows: 50% X 80% = 40% PLS. Therefore, a 100-pound sack of seed contains only 40-pounds of Pure Live Seed. To obtain a satisfactory revegetation and erosion control from seed mixtures, one would need to plant 2.5 times the PLS number to achieve 100-percent plant coverage. Except as noted, all seeding recommendations are based on PLS.

TABLE 1.

Plant Name	Variety	Number of Seeds Applied Per Square Foot of Soil	Pounds of PLS* Needed in Mixture Per Acre
Grasses			
Sand dropseed	Vaughn	12.0	0.10
Indian ricegrass**	Nezpar	12.8	3.0
Galleta	Viva	7.4	2.0
Alkali sacaton	Salado	9.2	0.25
Blue grama	Hachita	8.0	0.75
	Subtotals	48.6	6.1
Shrubs			
Fourwing saltbush	closest source		1.0
Apache plume	closest source		1.0
	Subtotal		2.0
	Total Poundage		8.1

** Seed will be 2-years old

2.1.3 Hay Mulch.

Must be bailed, bright, native prairie hay, broom sedge, bluestem hay, King Ranch bluestem hay, or hay of other grasses and sedges having the equivalent in leafiness, structure, and fiber strength. Hay material which has passed through a seed-harvesting combine or a thresher will not be acceptable. A minimum of 65 percent of weight of the herbage making up the material will be 10 inches or longer. Mulch materials which contains mature seed of noxious weeds or other species, including crops which would be detrimental to the grasses planted on the mulched areas or provide a menace to surrounding farmlands, will not be acceptable. Discolored, weathered, rotted, molded, brittle hay or any hay harvested during dormant season will not be acceptable. Hay will be applied at the rate of 1.5 to 2 tons per acre.

2.1.4 Topsoil.

Must have sufficient texture, organic content, etc., to germinate planted seeds and support long-term growth. Top soil shall not be excessively sodic or saline. The Exchangeable Sodium Percentage (ESP) or Sodium Absorption Ratio (SAR) will be less than 13 and salinity will be less than 6 mmhos/cm or decicemans/m. Topsoil shall not contain noxious weeds that would prevent or impair establishment and long-term growth of planted species.

2.2 INSPECTION AND TESTS.

2.2.1 Fertilizer.

Six signed copies of fertilizer invoices will be provided. Invoices shall show quantities and grade of each fertilizer furnished. Samples of each lot of fertilizer will be tested upon request of the Contracting Officer. Sampling and testing will be done in accordance with official methods of analysis of the Association of Official Analytical Chemists at the discretion of the Contracting Officer. The empty fertilizer bags or containers will be retained, and on completion of the project, a final check of total quantities of fertilizer used will be made against the total area treated. If minimum rates of application have not been met, additional quantities of these materials, to make up minimum application specified, will be distributed as directed.

2.2.2 Seed.

The Contracting Officer will be furnished six signed copies of statement from the vendor, certifying that each container of seed delivered is labeled in accordance with the Federal Seed Act and is, at least, equal to requirements previously specified. This certification and copies of the official seed analysis, or official seed tags, will be obtained from the vendor and will be furnished on, and with, all copies of seed invoices. Invoices, certifications, and seed analysis will be furnished prior to commencement of planting operations. Each lot of seed may be re-sampled and re-tested, in accordance with latest rules and regulations under the Federal Seed Act, at the discretion of the Contracting Officer. Such re-sampling and re-testing will be made by, or under, the supervision of the Government. If these tests reveal the seed to be below the specified pure live seed content, the Contractor will be required to plant additional seed to compensate for the deficiency at no additional cost to the Government. The seed re-test will be conducted by the State Seed Laboratory.

2.2.3 Mulch.

Not less than five days prior to commencement of seeding operations, the Contracting Officer will be notified of sources from which mulch materials (hay, straw, and gravel) are available and the quantities thereof.

Representative samples of the material proposed for use will be submitted for approval. A weight certificate, signed by a public weigher, will be furnished prior to applying for the hay and straw mulch. The Mulch material will be unloaded and stacked in an orderly manner.

2.2.4 Soil for Repairs (if required).

Not less than five days prior to the commencement of seeding operations, the Contracting Officer will be notified of the source from which soil for repairs is to be furnished. The material will be inspected to determine whether or not it meets the necessary requirements for repair material. The soil will be subject to approval prior to use.

PART 3 - EXECUTION

3.1 GENERAL CONSTRUCTION REQUIREMENTS.

Equipment must be in good condition and will be provided for accomplishing the work. Equipment will be subject to approval before work is started.

3.1.1 Clearing.

Areas to be seeded will be cleared of any materials that might impede work progress and proper restoration techniques. These shall include stumps, roots, cables, wire, garbage or other debris. The collected material will be burned or removed from the site. Rocks up to cobble size may be left to foster water harvesting and to help establish seeds.

3.1.2 Seedbed Preparation.

3.1.2.1 Grading.

Previously established grades will be maintained on areas to be treated in a true and even condition and necessary repairs will be made to previously graded areas. Areas having significant inadequate drainage, as indicated by ponding of water in low lying areas or on other areas, will be filled or graded to drain as directed by the Contracting Officer. Slight depressions and furrows, perpendicular to the flow of water, may be left or created to foster water harvesting.

3.1.2.2 Scarifying/Tilling.

Immediately prior to seeding, the soil will be tilled and/or scarified, depending on the soil hardness, to a depth of 4-6 inches to prepare an acceptable seed bed. Areas with some established grass cover need not be scarified. The minimum acceptable depth will be 4 inches and will be confirmed by the Contracting Officer by random and frequent inspections. This work will be accomplished by ripping, disking, or harrowing on the contour, and care will be taken to maintain the contour. The Contractor shall utilize tractors with adequate horsepower and heavy-duty tillage equipment in accomplishing the specified tillage operations. Areas severely compacted will be tilled with a heavy-duty disc or chisel-type breaking plow, followed by disking with a harrow and smoothed with a weighted spike tooth harrow, railroad irons, or bridge timber float drag. When a chisel plow is used, the chisel will be set not to exceed 10 inches apart and the areas will be cross or double tilled. Tilled areas will be left smooth, i.e., free of large clods and clumps not greater than egg size. A range of soil particle size, up to egg size, is desirable. As stated, slight depressions and furrows perpendicular to water flow will be permitted. If the soil is in a loosened and friable state (up to a minimum of 4 inches) as a consequence of construction activities, this operation need not be performed (as determined by the Contracting Officer).

3.1.2.3 Mechanical Application of Fertilizer.

Will be applied following scarification of the soil, and prior to commencing seeding operations. No more than 24 hours shall elapse between fertilization and seeding operations. The fertilizer distributor box will be equipped with baffle plates to prevent downward movement of fertilizer when operating on a slope. Application of fertilizer by use of a fertilizer attachment for the rangeland drill, as hereinafter specified, will be permissible for simultaneous dispersal of fertilizer and seed. Fertilizer shall not be dispensed through a seed hopper. Fertilizer will be uniformly distributed with a fertilizer distributor (Eze Flow) or comparable substitute, at the rate previously specified.

3.1.3 Planting seed.

3.1.3.1 Standardization.

Prior to the initiation of the seeding process, a typical area to be seeded will be selected. The Contractor shall conduct seeding equipment calibration tests in the presence of the Contracting Officer, to determine the appropriate equipment setting for planting seed at the specified rates. The entire seeding operation will be performed in this area according to project specifications and agreed upon by the Contracting Officer and the Contractor. This area shall serve as a trial run for the seeding work that will follow and the quality of work expected. If unplanted skips are noted after germination and growth of grass, the Contractor will be required to seed unplanted areas with specified grass or grass mixtures, at no additional cost to the Government. Seeding boxes will be kept at least half full during seeding operations to ensure even distribution of seed over all areas. Seeding equipment operation on slopes will be anchored, as required, to prevent downward movement of equipment and formation of deep ridges or ruts.

3.1.3.2 Planting.

Seed will be planted with a rangeland drill to a minimum depth of 0.25 inch and not deeper then 0.5 inch. Direction of planting will be across the slope, i.e., parallel to the contour. Seeding operations will be accomplished as permissible, weather conditions permitting, and during the specified field dates. Seeding rates, types, and quantities provided as specified in subparagraph, Seed Mixtures. The seed will be mixed thoroughly in the presence of the Contracting Officer and planted through the chaffy seed box. The seed will be planted after tilling and prior to mulching. Disks and spouts on the seed drill will be adjusted to 10 inches apart. The disks will be equipped with depth-control bands. The prescribed mix and rate will be uniformly applied over the area to be seeded. Bulk poundage for each species of seed will be determined by the PLS content of the seed purchased. The PLS poundage given in subparagraph, Seed Mixtures, will not be misinterpreted to mean the bulk poundage of seed to be used. The Contracting Officer will verify the Contractor's seed rate computations. Seed boxes will be kept at least half full during seeding operations to insure even distribution of seed over all the areas seeded. Bulk may be increased by the use of fertilizer, cornmeal, sawdust, rice hulls, sand, or other acceptable medium. Seeding equipment operating on slopes will be anchored, as required, to prevent downslope movement and formation of deep ridges or ruts. For small areas inaccessible to a seed drill, seeding may be accomplished by broadcasting with a "cyclone" hand-held seeder or comparable broadcast seeder. If seed is broadcast, it will be covered by lightly raking by hand. If unplanted skips and areas are observed after germination of the grass, the Contractor will be required to seed the these areas with specified grass or grass mixtures, at no additional cost to the Government.

3.1.3.3 Protection.

Seeded areas must be protected against foot traffic or other use by erecting barricades immediately after seeding is completed and by placing warning signs of a type approved by the Contracting Officer on the various areas. Such protective devices will be maintained until completion of all work under this contract.

3.1.4 Mulching.

3.1.4.1 Applying Mulch.

The grass hay mulch will be spread uniformly in a continuous blanket, using 1.5-to-2.0 tons of mulch per acre. Mulch will be spread by hand or by an approved blower-type mulch spreader, and applied so as to prevent excessive breakage of the mulch material. If this cannot be accomplished, the mulch will be spread by hand. Care will be exercised to insure that all wire from baled hay is collected as it is removed from the bale and then removed from the site. Mulching will be started at the windward side of relatively flat areas, or at the upper part of a steep slope, and continued, uniformly, until the area is covered. The mulch will not be bunched and the thickness of the mulch will be limited so that some sunlight and all precipitation will reach the ground and so that the mulch can be anchored.

3.1.4.2 Anchoring Mulch.

Immediately following the spreading, the mulch will be anchored in the soil to a depth of 2-3 inches. An approved machine, comparable to a disk harrow with cupped disks removed and replaced with straight rolling coulters adjusted to 8 inches apart and having edges approximately 1/8-inch wide, will be used to anchor the mulch. The machine(s) will be weighted and operated in such a manner to secure the hay firmly in the ground to form a soil-binding mulch and prevent loss, or bunching, of the hay by wind. Suitably anchored mulch will be firmly embedded in the soil with an anchored "tent" formed by the hay strands between crimp lines. The mulch anchoring machine will be anchored as required to prevent downslope movement and the formation of ridges and ruts. Suitable anchoring equipment will be on hand, ready for use, prior to applying the mulch. The coulters will be at least 10 inches in diameter. Mulch will be secured within 24 hours after seeding. The number of passes needed, not to exceed three, will be determined by the Contracting Officer.

3.1.4.3 Maintenance.

Mulched areas will be maintained until all work, or designated portions thereof, have been completed and accepted. Maintenance will consist of providing protection against traffic by erecting barricades and placing warning signs as specified in paragraph, Protection. Any damage will be repaired and mulch material that has been damaged by wind, or other causes, will be replaced and secured.

3.2 QUALITY CONTROL.

3.2.1 General.

The Contractor will establish and maintain quality control for the work covered in this section of the Technical Provisions to assure compliance with contract requirements and maintain quality control records for all construction operations including, but not limited to the following:

(1) Field Inspection of materials.

(2) Seeding.

(3) Maintenance.

3.2.2 Records.

Two legible copies of these records and tests, as well as the records of corrective measures taken, will be furnished to the Government, as directed by the Contracting Officer.

- - o 0 o - -

SECTION 03100

STRUCTURAL CONCRETE FORMWORK

PART 1 GENERAL

1.1 REFERENCES

The publications listed below form a part of this specification to the extent referenced. The publications are referred to in the text by basic designation only.

AMERICAN CONCRETE INSTITUTE (ACI)

ACI 347R (1988) Guide to Formwork for Concrete.

AMERICAN HARDBOARD ASSOCIATION (AHA)

AHA A135.4 (1982; R 1988) Basic Hardboard.

DEPARTMENT OF COMMERCE (DOC)

DOC PS 1 (1983) Construction and Industrial Plywood.

1.2 SUBMITTALS

The following shall be submitted in accordance with Section 01300 SUBMITTAL DESCRIPTIONS:

Concrete Formwork.

Manufacturer's data including literature describing form materials, accessories, and form releasing agents.

SD-06, Instructions

Form Releasing Agents.

Manufacturer's recommendation on method and rate of application of form releasing agents.

1.3 DESIGN

Formwork shall be designed in accordance with methodology of ACI 347R for anticipated loads, lateral pressures, and stresses. Forms shall be capable of producing a surface which meets the requirements of the class of finish specified in Section 03300 CONCRETE FOR BUILDING CONSTRUCTION. Forms shall be capable of withstanding the pressures resulting from placement and vibration of concrete.

PART 2 PRODUCTS

2.1 FORM MATERIALS

2.1.1 Forms For Class A and Class B Finish

Forms for Class A and Class B finished surfaces shall be plywood panels conforming to DOC PS 1, Grade B-B concrete form panels, Class I or II. Other form materials or liners may be used provided the smoothness and appearance of concrete produced will be equivalent to that produced by the plywood concrete form panels. Forms for round columns shall be the prefabricated seamless type.

2.1.2 Forms For Class C Finish

Forms for Class C finished surfaces shall be shiplap lumber; plywood conforming to DOC PS 1, Grade B-B concrete form panels, Class I or II; tempered concrete form hardboard conforming to AHA A135.4; other approved concrete form material; or steel, except that steel lining on wood

sheathing shall not be used. Forms for round columns may have one vertical seam.

2.1.3 Forms For Class D Finish

Forms for Class D finished surfaces, except where concrete is placed against earth, shall be wood or steel or other approved concrete form material.

2.1.4 Form Ties

Form ties shall be factory-fabricated metal ties, shall be of the removable or internal disconnecting or snap-off type, and shall be of a design that will not permit form deflection and will not spall concrete upon removal. Solid backing shall be provided for each tie. Except where removable tie rods are used, ties shall not leave holes in the concrete surface less than 1/4 inch nor more than 1 inch deep and not more than 1 inch in diameter. Removable tie rods shall be not more than 1-1/2 inches in diameter. Ties in all tank walls shall be provided with waterstop washers.

2.1.5 Form Releasing Agents

Form releasing agents shall be commercial formulations that will not bond with, stain or adversely affect concrete surfaces. Agents shall not impair subsequent treatment of concrete surfaces depending upon bond or adhesion nor impede the wetting of surfaces to be cured with water or curing compounds.

PART 3 EXECUTION

3.1 INSTALLATION

3.1.1 Formwork

Forms shall be mortar tight, properly aligned and adequately supported to produce concrete surfaces meeting the surface requirements specified in Section 03300 CONCRETE FOR BUILDING CONSTRUCTION and conforming to construction tolerance given in TABLE 1. Where concrete surfaces are to have a Class A or Class B finish, joints in form panels shall be arranged as approved. Where forms for continuous surfaces are placed in successive units, care shall be taken to fit the forms over the completed surface so as to obtain accurate alignment of the surface and to prevent leakage of mortar. Forms shall not be reused if there is any evidence of surface wear and tear or defects which would impair the quality of the surface. Surfaces of forms to be reused shall be cleaned of mortar from previous concreting and of all other foreign material before reuse. Form ties that are to be completely withdrawn shall be coated with a nonstaining bond breaker.

3.2 CHAMFERING

Except as otherwise shown, external corners that will be exposed shall be chamfered, beveled, or rounded by moldings placed in the forms.

3.3 COATING

Forms for Class A and Class B finished surfaces shall be coated with a form releasing agent before the form or reinforcement is placed in final position. The coating shall be used as recommended in the manufacturer's printed or written instructions. Forms for Class C and D finished surfaces may be wet with water in lieu of coating immediately before placing concrete, except that in cold weather with probable freezing temperatures coating shall be mandatory. Surplus coating on form surfaces and coating on reinforcing steel and construction joints shall be removed before placing concrete.

3.4 REMOVAL OF FORMS

Forms shall be removed in a manner that will prevent injury to the concrete and ensure the complete safety of the structure. Formwork for columns, walls, side of beams and other parts not supporting the weight of concrete may be removed when the concrete has attained sufficient strength to resist damage from the removal operation but not before at least 24 hours has elapsed since concrete placement. Supporting forms and shores shall not be removed from beams, floors and walls until the structural units are strong enough to carry their own weight and any other construction or natural loads. In no case will supporting forms or shores be removed before the concrete strength has reached 70 percent of design strengths as determined by field cured cylinders or other approved methods. This strength shall be demonstrated by job-cured test specimens, and by a structural analysis considering the proposed loads in relation to these test strengths and the strength of forming and shoring system. The job-cured test specimens for form removal purposes shall be provided in numbers as directed and shall be in addition to those required for concrete quality control. The specimens shall be removed from molds at the age of 24 hours and shall receive, insofar as possible, the same curing and protection as the structures they represent.

TABLE 1
TOLERANCES FOR FORMED SURFACES

1.	Variations from the plumb:	In any 10 feet of length ----- 1/4 inch
a.	In the lines and surfaces of columns, piers, walls and in arises	Maximum for entire length ----- 1 inch
b.	For exposed corner columns, control-joint grooves, and other conspicuous lines	In any 20 feet of length ----- 1/4 inch Maximum for entire length ---- 1/2 inch
2.	Variation from the level or from the grades indicated on the drawings:	In any 10 feet of length ----- 1/4 inch In any bay or in any 20 feet of length ---------- 3/8 inch
a.	In slab soffits, beam soffits, and in arises, measured before removal of supporting shores	Maximum for entire length ---- 3/4 inch
b.	In exposed lintels, sills, horizontal grooves, and other conspicuous lines	In any bay or in any 20 feet of length ---------- 1/4 inch Maximum for entire length ---- 1/2 inch
3.	Variation of the linear building lines from established position in plan	In any 20 feet ---------- 1/2 inch Maximum ---------- 1 inch
4.	Variation of distance between walls, columns, partitions	1/4 inch per 10 feet of distance, but not more than 1/2 inch in any one bay, and not more than 1 inch total variation
5.	Variation in the sizes and locations of sleeves, floor openings, and wall opening	Minus ---------- 1/4 inch Plus ---------- 1/2 inch
6.	Variation in cross-sectional dimensions of columns and beams and in the thickness of slabs and walls	Minus ---------- 1/4 inch Plus ---------- 1/2 inch

7. Footings:

a.	Variation of dimensions in plan	Minus ---------- 1/2 inch Plus ---------- 2 inches when formed or plus 3 inches when placed against unformed excavation
b.	Misplacement of eccentricity	2 percent of the footing width in the direction of misplacement but not more than ---------- 2 inches
c.	Reduction in thickness	Minus ---------- 5 percent of specified thickness

8.	Variation in steps:	Riser ---------- 1/8 inch
a.	In a flight of stairs	Tread ---------- 1/4 inch
b.	In consecutive steps	Riser ---------- 1/16 inch Tread ---------- 1/8 inch

- - o 0 o - -

SECTION 03200

CONCRETE REINFORCEMENT

PART 1 GENERAL

1.1 REFERENCES

The publications listed below form a part of this specification to the extent referenced. The publications are referred to in the text by basic designation only.

AMERICAN CONCRETE INSTITUTE (ACI)

ACI 318	(1989; 318R-89) Building Code Requirements for Reinforced Concrete.

AMERICAN SOCIETY FOR TESTING AND MATERIALS (ASTM)

ASTM A 184	(1990) Fabricated Deformed Steel Bar Mats for Concrete Reinforcement.
ASTM A 185	(1990a) Steel Welded Wire Fabric, Plain, for Concrete Reinforcement.
ASTM A 615	(1990) Deformed and Plain Billet-Steel Bars for Concrete Reinforcement.
ASTM A 706	(1990) Low-Alloy Steel Deformed Bars for Concrete Reinforcement.
ASTM A 775	(1992) Standard Specification for Epoxy-Coated Reinforcing Steel Bars

CONCRETE REINFORCING STEEL INSTITUTE (CRSI)

CRSI MSP-1	(1990) Manual of Standard Practice.

1.2 SUBMITTALS

The following shall be submitted in accordance with Section 01300 - SUBMITTALS:

SD-04, Drawings

Concrete Reinforcement System.

Detail drawings showing reinforcing steel schedules, sizes, grades, and splicing and bending details.

SD-08, Statements

SD-13, Certificates

Reinforcing Steel.

Certified copies of mill reports attesting that the reinforcing steel furnished meets the requirements specified, prior to the installation of reinforcing steel.

1.3 DELIVERY AND STORAGE

Reinforcement and accessories shall be stored off the ground on platforms, skids, or other supports.

PART 2 PRODUCTS

2.1 DOWELS

Dowels shall conform to ASTM A 615, Grade 60.

2.2 FABRICATED BAR MATS

Fabricated bar mats shall conform to ASTM A 184.

2.3 REINFORCING STEEL

Reinforcing steel shall be deformed bars conforming to ASTM A 615, grade 60 and sizes as indicated. Grade 60 bars shall be used for drilled piers.

2.4 WELDED WIRE FABRIC

Welded wire fabric shall conform to ASTM A 185. Welded wire fabric shall be provided in flat sheets.

2.5 WIRE TIES

Wire ties shall be 16-gauge or heavier black annealed steel wire.

2.6 SUPPORTS

Bar supports for formed surfaces shall be designed and fabricated in accordance with CRSI MSP-1 and shall be steel or precast concrete blocks. Precast concrete blocks shall have wire ties and shall be not less than 4 inches square when supporting reinforcement on ground. Precast concrete block shall have compressive strength equal to that of the surrounding concrete. Where concrete formed surfaces will be exposed to weather or where surfaces are to be painted, steel supports within 1/2 inch of concrete surface shall be galvanized, plastic protected or of stainless steel. Concrete supports used in concrete exposed to view shall have the same color and texture as the finish surface. For slabs on grade, supports shall be precast concrete blocks or plastic coated steel fabricated with bearing plates. Plastic supports are not acceptable.

For drilled piers, spacers shall be provided on the sides of the reinforcing cage to insure the required concrete cover. The spacers shall be plastic coated chairs and shall be located at 5'-0" on center vertically and equally spaced at three locations around the circumference, for round cages, or one on each side, for square cages. Chairs shall be provided at the bottom of the reinforcing cage to provide the required concrete cover at the bottom of the pier.

PART 3 EXECUTION

3.1 REINFORCEMENT

Reinforcement shall be fabricated to shapes and dimensions shown and shall conform to the requirements of ACI 318. Reinforcement shall be cold bent unless otherwise authorized. Bending may be accomplished in the field or at the mill. Bars shall not be bent after embedment in concrete. Safety caps shall be placed on all exposed ends of concrete reinforcement bars that pose a safety hazard. Wire tie ends shall face away from the forms.

3.1.1 Placement

Reinforcement shall be free from loose rust and scale, dirt, oil, or other deleterious coating that could reduce bond with the concrete. Reinforcement shall be placed in accordance with ACI 318 at locations shown plus or minus one bar diameter. Reinforcement shall not be continuous through expansion joints and shall be as indicated through construction or contraction joints. Concrete coverage shall be as indicated or as required by ACI 318. If bars are moved more than one bar diameter to avoid interference with other reinforcement, conduits or embedded items, the resulting arrangement of bars, including additional bars required to meet

structural requirements, shall be approved before concrete is placed. In the event of a conflict in locations of embedded items and steel reinforcement, the relocation of the embedded items or cutting, bending, addition, displacement or omission of steel reinforcement will only be permitted with the approval of the contracting officer.

3.1.1.1 Ribbed Mat Foundations

Reinforcement shall be continuous through construction joints, but not through expansion and contraction joints.

3.1.2 Splicing

Splices of reinforcement shall conform to ACI 318 and shall be made only as required or indicated. Splicing shall be by lapping or by mechanical or welded butt connection; except that lap splices shall not be used for bars larger than No. 11 unless otherwise indicated. Welding shall not be permitted. Lapped bars shall not be spaced farther apart than one-fifth the required length of lap or 6 inches. Mechanical butt splices shall be in accordance with the recommendation of the manufacturer of the mechanical splicing device. Butt splices shall develop 125 percent of the specified minimum yield tensile strength of the spliced bars or of the smaller bar in transition splices. Bars shall be flame dried before butt splicing. Adequate jigs and clamps or other devices shall be provided to support, align, and hold the longitudinal centerline of the bars to be butt spliced in a straight line.

3.2 WELDED-WIRE FABRIC

Welded-wire fabric shall be placed in slabs as indicated. Fabric placed in slabs on grade shall be continuous between construction, and contraction joints. Fabric placed in slabs on grade shall be discontinuous between expansion joints. Fabric placement at joints shall be as indicated. Lap splices shall be made in such a way that the overlapped area equals the distance between the outermost crosswires plus 2 inches. Laps shall be staggered to avoid continuous laps in either direction. Fabric shall be wired or clipped together at laps at intervals not to exceed 4 feet. Fabric shall be positioned by the use of supports.

3.2.1 Ribbed Mat Foundations

Fabric shall be continuous through construction joints, but not through expansion and contraction joints.

3.3 DOWELS

Dowels shall be installed in slabs on grade at locations indicated and at right angles to joint being doweled. Dowels shall be accurately positioned and aligned parallel to the finished concrete surface before concrete placement. Dowels shall be rigidly supported during concrete placement. One end of dowels shall be coated with a bond breaker. Dowels shall be tied in place prior to concrete placement. Inserting dowels into concrete that has already been placed is not acceptable.

- - o 0 o - -

SECTION 03250

EXPANSION JOINTS, CONTRACTION JOINTS, AND WATERSTOPS

PART 1 GENERAL

1.1 REFERENCES

The publications listed below form a part of this specification to the extent referenced. The publications are referred to in the text by basic designation only.

AMERICAN HARDBOARD ASSOCIATION (AHA)

AHA A135.4	(1982; R 1988) Basic Hardboard

AMERICAN SOCIETY FOR TESTING AND MATERIALS (ASTM)

ASTM D 1751	(1983) Preformed Expansion Joint Filler for Concrete Paving and Structural Construction (Nonextruding and Resilient Bituminous Types)
ASTM D 1752	(1984) Preformed Sponge Rubber and Cork Expansion Joint Fillers for Concrete Paving and Structural Construction
ASTM D 2628	(1991) Preformed Polychloroprene Elastomeric Joint Seals for Concrete Pavements
ASTM D 2835	(1989) Lubricant for Installation of Preformed Compression Seals in Concrete Pavements

CORPS OF ENGINEERS (COE)

COE CRD-C 513	(1974) Corps of Engineers Specifications for Rubber Waterstops
COE CRD-C 572	(1974) Corps of Engineers Specifications for Polyvinylchloride Waterstops

FEDERAL SPECIFICATIONS (FS)

FS-TT-S-227	(Rev E) Sealing Compound: Elastomeric Type, Multi-Component (for Caulking, Sealing, and Glazing in Buildings and other Structures)
FS-TT-S-230	(Rev C) Sealing Compound: Elastomeric Type, Single Component (for Caulking, Sealing and Glazing in Buildings and other Structures)
FS SS-S-200	(Rev. E; Am 1) Sealants, Joint, Two-Component, Jet-Blast-Resistant, Cold-Applied, for Portland Cement Concrete Pavement
FS SS-S-1401	(Rec. C; Notice 1) Sealant, Joint, Non-Jet-Fuel-Resistant, Hot-Applied, for Portland Cement and Asphalt Concrete Pavements
FS SS-S-1614	(Rev. A; Notice 1) Sealants, Joint, Jet-Fuel-Resistant, Hot-Applied, for Portland Cement and Tar Concrete Pavements

1.2 SUBMITTALS

The following shall be submitted in accordance with Section 01300 SUBMITTAL DESCRIPTIONS.

SD-01 Data

Materials.

Manufacturer's catalog data and manufacturer's recommended instructions for splicing of waterstops.

SD-13 Certificates

Materials.

Certificates of compliance stating that the joint filler and sealant materials and waterstops conform to the requirements specified.

1.3 DELIVERY AND STORAGE

Material delivered and placed in storage shall be stored off the ground and protected from moisture, dirt, and other contaminants. Sealants shall be delivered in the manufacturer's original unopened containers. Sealants whose shelf life has expired shall be removed from the site.

PART 2 PRODUCTS

2.1 CONTRACTION-JOINT STRIPS

Contraction-joint strips shall be 1/8-inch thick tempered hardboard conforming to AHA A135.4, Class 1. In lieu of hardboard strips, rigid polyvinylchloride (PVC) insert strips specifically designed to induce controlled cracking in slabs on grade may be used. Such insert strips shall have removable top section.

2.2 EXPANSION-JOINT FILLER

Expansion-joint filler shall be premolded material conforming to ASTM D 1751 or ASTM D 1752. Unless otherwise indicated, filler material shall be 3/8-inch thick and of a width applicable for the joint formed.

2.3 ISOLATION-JOINT FILLER

Isolation-joint filler shall be premolded material conforming to ASTM D 1752. Unless otherwise indicated, filler material shall be 2-inch thick and of a width applicable for the joint formed.

2.4 JOINT SEALANT

Joint sealant shall conform to the following:

2.4.1 Sealing Compound (Joint Sealer) Elastomeric Type, Multi-component:

Fed. Spec TT-S-227, Type I, Class B, flow, self leveling, and of grey color. The sealing compound shall not contain aluminum powder pigment. A primer recommended by the sealant manufacturer shall be furnished and used with all these sealing compounds. The sealer and primer shall be non-staining when tested as specified in Fed. Spec. TT-S-227.

2.4.2 Sealing Compound (Joint Sealer); Elastomeric Type, Single Component:

Fed. Spec. TT-S-230, Type I, and of grey color. An approved primer shall be used when recommended by the manufacturer of the sealer. The sealer and primer shall be non-staining.

2.4.3 Preformed Polychloroprene Elastomeric Joint Seals

ASTM D 2628.

2.4.4 Lubricant for Installation of Preformed Compression Seals

ASTM D 2835.

2.5 WATERSTOPS

Waterstops shall conform to COE CRD-C 513 or COE CRD-C 572.

PART 3 EXECUTION

3.1 JOINTS

Joints shall be installed at locations indicated and as authorized.

3.1.1 Contraction Joints

Contraction joints may be constructed by inserting tempered hardboard strips or rigid PVC insert strips into the plastic concrete or by cutting the concrete with a saw after concrete has set. Joints shall be approximately 1/8-inch wide and shall extend into the slab approximately one-fourth the slab thickness but not less than 1 inch.

3.1.1.1 Joint Strips

Strips shall be of the required dimensions and as long as practicable. After the first floating, the concrete shall be grooved with a tool at the joint locations. The strips shall be inserted in the groove and depressed until the top edge of the vertical surface is flush with the surface of the slab. The slab shall be floated and finished as specified. Working of the concrete adjacent to the joint shall be the minimum necessary to fill voids and consolidate the concrete. Where indicated, the top portion of the strip shall be sawed out after the curing period to form a recess for sealer. The removable section of PVC strips shall be discarded and the insert left in place. Means shall be provided to insure true alignment of the strips is maintained during insertion.

3.1.1.2 Sawed Joints

Joint sawing shall be early enough to prevent uncontrolled cracking in the slab, but late enough that this can be accomplished without appreciable spalling. Concrete-sawing machines shall be adequate in number and power, and with sufficient replacement blades to complete the sawing at the required rate. Joints shall be cut to true alignment and shall be cut in sequence of concrete placement. Sludge and cutting debris shall be removed.

3.1.2 Expansion Joints

Premolded expansion joint filler shall be used in expansion and isolation joints in slabs around columns and between slabs on grade and vertical surfaces where indicated. The filler shall extend the full slab depth, unless otherwise indicated. The edges of the joint shall be neatly finished with an edging tool of 1/8-inch radius, except where a resilient floor surface will be applied. Where the joint is to receive a sealant, the filler strips shall be installed at the proper level below the finished floor with a slightly tapered, dressed-and-oiled wood strip temporarily secured to the top thereof to form a recess 3/4-inch deep to be filled with sealant. The wood strip shall be removed after the concrete has set. In lieu of the wood strip a removable expansion filler cap designed and fabricated for this purpose may be used.

3.1.3 Joint Sealant

Sawed contraction joints, construction joints, and expansion joints in slabs shall be filled with joint sealant, unless otherwise shown. Types and locations of sealants shall be as indicated. Joint surfaces shall be clean, dry, and free of oil or other foreign material which would adversely affect the bond between sealant and concrete. Joint sealant

shall be applied as recommended by the manufacturer of the sealant. Joints sealed with field molded sealant shall be completely filled with sealant.

3.2 WATERSTOPS

Waterstops shall be of the type indicated and shall be installed at the locations shown to form a continuous water-tight diaphragm. Adequate provision shall be made to support and completely protect the waterstops during the progress of the work. Any waterstop punctured or damaged shall be repaired or replaced. Splices shall be made in conformance with the recommendations of the waterstop manufacturer. Continuity of cross sectional features shall be maintained across the splice. Splices showing evidence of separation after bending shall be remade.

- - o 0 o - -

SECTION 03300

CONCRETE FOR BUILDING CONSTRUCTION

PART 1 GENERAL

1.1 REFERENCES

The publications listed below form a part of this specification to the extent referenced. The publications are referred to in the text by basic designation only.

AMERICAN CONCRETE INSTITUTE (ACI)

ACI 117	(1990; Errata) Standard Tolerances for Concrete Construction and Materials
ACI 211.1	(1991) Standard Practice for Selecting Proportions for Normal, Heavyweight, and Mass Concrete
ACI 301	(1989) Structural Concrete for Buildings
ACI 302.1R	(1989) Guide for Concrete Floor and Slab Construction
ACI 305R	(1991) Hot Weather Concreting
ACI 306R	(1988) Cold Weather Concreting
ACI 318	(1989; 318R-89; Rev 1992; Errata) Building Code Requirements for Reinforced Concrete

AMERICAN SOCIETY FOR TESTING AND MATERIALS (ASTM)

ASTM C 31	(1991) Making and Curing Concrete Test Specimens in the Field
ASTM C 33	(1990) Concrete Aggregates
ASTM C 39	(1986) Compressive Strength of Cylindrical Concrete Specimens
ASTM C 42	(1990) Obtaining and Testing Drilled Cores and Sawed Beams of Concrete
ASTM C 78	(1984) Flexural Strength of Concrete (Using Simple Beam With Third-Point Loading)
ASTM C 94	(1992) Ready-Mixed Concrete
ASTM C 109	(1992) Compressive Strength of Hydraulic Cement Mortars (Using 2-in. or 50-mm Cube Specimens)
ASTM C 143	(1990a) Slump of Hydraulic Cement Concrete
ASTM C 150	(1992) Portland Cement
ASTM C 171	(1992) Sheet Materials for Curing Concrete
ASTM C 172	(1990) Sampling Freshly Mixed Concrete
ASTM C 173	(1978) Air Content of Freshly Mixed Concrete by the Volumetric Method
ASTM C 192	(1990a) Making and Curing Concrete Test Specimens in the Laboratory

ASTM C 231	(1991) Air Content of Freshly Mixed Concrete by the Pressure Method
ASTM C 260	(1986) Air-Entraining Admixtures for Concrete
ASTM C 309	(1991) Liquid Membrane-Forming Compounds for Curing Concrete
ASTM C 494	(1992) Chemical Admixtures for Concrete
ASTM C 595	(1992) Blended Hydraulic Cements
ASTM C 597	(1983; R 1991) Pulse Velocity Through Concrete
ASTM C 618	(1992a) Fly Ash and Raw or Calcined Natural Pozzolan for Use as a Mineral Admixture in Portland Cement Concrete
ASTM C 803	(1990) Penetration Resistance of Hardened Concrete
ASTM C 805	(1985) Rebound Number of Hardened Concrete
ASTM C 1017	(1992) Chemical Admixtures for Use in Producing Flowing Concrete
ASTM C 1107	(1991a) Packaged Dry, Hydraulic-Cement Grout (Nonshrink)
ASTM E 96	(1993) Water Vapor Transmission of Materials

FEDERAL SPECIFICATIONS (FS)

FS CCC-C-467	(Rev C) Cloth, Burlap, Jute (or Kenaf)

NATIONAL READY-MIXED CONCRETE ASSOCIATION (NRMCA)

NRMCA CPMB 100	(1990) Concrete Plant Standards
NRMCA QC 3	(1984) Quality Control Manual: Section 3, Plant Certifications Checklist: Certification of Ready-Mixed Concrete Production Facilities
NRMCA TMMB 1	(1989) Truck Mixer, Agitator and Front Discharge Concrete Carrier Standards

1.2 SUBMITTALS

The following shall be submitted in accordance with Section 01300 SUBMITTAL DESCRIPTIONS:

SD-08 Statements

Proportions of Mix.

The results of trial mix along with a statement giving the maximum nominal coarse aggregate size and the proportions of all ingredients that will be used in the manufacture of each strength of concrete, at least 14 days prior to commencing concrete placing operations. Aggregate weights shall be based on the saturated surface dry condition. The statement shall be accompanied by test results from an independent commercial testing laboratory, attesting that the proportions selected will produce concrete of the qualities indicated. No substitutions shall be made in the materials used in the work without additional tests to show that the quality of the concrete is satisfactory.

SD-09 Reports

Sampling and Testing.

Certified copies of laboratory test reports, including all test data, for aggregate, admixtures, and curing compound. These tests shall be made by an approved commercial laboratory or by a laboratory maintained by the manufacturers of the materials.

SD-13 Certificates

Cementitious Materials.

Manufacturer's certification of compliance, accompanied by mill test reports attesting that the materials meet the requirements of the specification under which it is furnished, for cement, pozzolan, and chemical admixtures. No cement, pozzolan, or admixture shall be used until notice of acceptance has been given. Cement, pozzolan, and admixture may be subjected to check testing by the Government from samples obtained at the mill, at transfer points, or at the project site.

Perimeter Insulation.

Certificate attesting that the polyurethane insulation furnished for the project contains recovered material, and showing an estimated percentage of such recovered material.

1.3 GENERAL REQUIREMENTS

Tolerances for concrete construction and materials shall be in accordance with ACI 117.

1.3.1 Strength Requirements

Structural concrete for all work shall have a 28-day compressive strength of 28 MPa. (4,000 pounds per square inch.) Fill concrete and concrete liners on grade shall have a minumum compressive strength of 17.5 MPa. (2,500 pounds per square inch.) Concrete made with high-early strength cement shall have a 7-day strength equal to the specified 28-day strength for concrete made with Type I or II portland cement.

1.3.2 Air Entrainment

Concrete, at the option of the Contractor, shall contain from 3 to 5 percent total air. Concrete in drilled piers shall not be air entrained.

1.3.3 Special Properties

Concrete may contain other admixtures, such as water reducers, superplasticizers, or set retarding agents to provide special properties to the concrete, if approved.

1.3.4 Slump

Slump shall be within the following limits:

Structural Element	Slump in inches	
	Minimum	Maximum
Walls, columns and beams	2	4
Foundation walls, substructure walls, footings, pavement, and slabs	1	3
Drilled piers	5	7
Any structural concrete approved for placement by pumping	None	6

Structural Element	Slump in millimeters Minimum	Maximum
Walls, columns and beams	50	100
Foundation walls, substructure walls, footings, pavement, and slabs	25	75
Drilled piers	125	175
Any structural concrete approved for placement by pumping	None	150

1.3.4.1 Use of Superplasticizer

Where use of superplasticizers are approved to produce flowing concrete these slump requirements do not apply.

1.3.5 Technical Service for Specialized Concrete

The service of a technical representative shall be obtained to oversee proportioning, batching, mixing, placing, consolidating and finishing of specialized structural concrete, such as lightweight or flowing concrete until field controls indicate concrete of specified quality is furnished.

1.4 PROPORTIONS OF MIX

1.4.1 Mixture Proportioning, Normal Weight Concrete

Trial batches shall contain materials proposed to be used in the project. Trial mixtures having proportions, consistencies and air content suitable for the work shall be made based on methodology described in ACI 211.1, using at least three different water-cement ratios. Trial mixes shall be proportioned to produce concrete strengths specified. Trial mixtures shall be designed for maximum permitted slump and air content. The temperature of concrete in each trial batch shall be reported. For each water-cement ratio at least three test cylinders or beams for each test age shall be made and cured in accordance with ASTM C 192. They shall be tested at 7 and 28 days in accordance with ASTM C 39. From these test results a curve shall be plotted showing the relationship between water-cement ratio and strength. For each strength of concrete the maximum allowable water-cement ratio shall be that shown by these curves to produce an average strength as specified in paragraph AVERAGE STRENGTH.

1.4.2 Mixture Proportioning, Lightweight Concrete

1.4.3 Average Strength

In meeting the strength requirements specified, the selected mixture proportion shall produce an average compressive strength exceeding the specified strength by the amount indicated below. Where a concrete production facility has test records, a standard deviation shall be established. Test records from which a standard deviation is calculated shall represent materials, quality control procedures, and conditions similar to those expected; shall represent concrete produced to meet a specified strength or strengths within 7 MPa. (1000 psi) of that specified for proposed work; and shall consist of at least 30 consecutive tests. A strength test shall be the average of the strengths of two cylinders made from the same sample of concrete and tested at 28 days or at other test age designated for determination of the specified strength.

1.4.3.1 Test Records Exceeding 29

Required average compressive strength used as the basis for selection of concrete proportions shall be the larger of the specified strength plus the standard deviation multiplied by 1.34 or the specified strength plus the standard deviation multiplied by 2.33 minus 500.

1.4.3.2 Test Records Less Than 29

Where a concrete production facility does not have test records meeting the above requirements but does have a record based on 15 to 29 consecutive tests, a standard deviation may be established as the product of the calculated standard deviation and a modification factor from the following table:

No. of tests (1)	Modification factor for standard deviation
less than 15	See Note
15	1.16
20	1.08
25	1.03
30 or more	1.00

(1) Interpolate for intermediate numbers of tests.

When a concrete production facility does not have field strength test records for calculation of standard deviation or the number of tests is less than 15, the required average strength shall be:

a. The specified strength plus 8 (1200) for specified strengths of 21 to 35 MPa. (3000 to 5000 psi.)

1.5 STORAGE OF MATERIALS

Cement and pozzolan shall be stored in weathertight buildings, bins, or silos which will exclude moisture and contaminants. Aggregate stockpiles shall be arranged and used in a manner to avoid excessive segregation and to prevent contamination with other materials or with other sizes of aggregates. Reinforcing bars and accessories shall be stored above the ground on platforms, skids or other supports. Other materials shall be stored in such a manner as to avoid contamination and deterioration. Admixtures which have been in storage at the project site for longer than 6 months or which have been subjected to freezing shall not be used unless retested and proven to meet the specified requirements.

PART 2 PRODUCTS

2.1 ADMIXTURES

Admixtures shall conform to the following:

2.1.1 Accelerating Admixture

ASTM C 494, Type C or E; Calcium chloride shall not be used.

2.1.2 Air-Entraining Admixture

ASTM C 260.

2.1.3 Flowing Concrete Admixture

ASTM C 1017, Type 1 or 2.

2.1.4 Water-Reducing or Retarding Admixture

ASTM C 494, Type A, B, D, F, or G.

2.2 CEMENTITIOUS MATERIALS

Cementitious materials shall each be of one type and from one source when used in concrete which will have surfaces exposed in the finished structure. Cementitious materials shall conform to one of the following:

2.2.1 Cement

ASTM C 150, Type I or II or III.

2.2.2 Pozzolan

Pozzolan shall conform to ASTM C618, Class F. Maximum loss on ignition shall not be over 4 percent. Samples shall be obtained, prepared, and tested in accordance with ASTM C311. All pozzolan mixtures shall contain pozzolan in the maximum proportion of 15 percent of the total cementitious material by absolute volume, based on the specific gravity of the portland cement and the pozzolan. Pozzolan (fly ash) will be accepted on the basis of certified test results showing that the pozzolan meets all requirements specified herein. The Contractor shall report certified test results for each mill lot of fly ash furnished. When, in the opinion of the Contracting Officer, the fly ash becomes damaged in transit or deteriorated because of age or improper storage, the fly ash proposed for use shall be sampled at the mixing site by the Contractor in the presence of a representative of the Contracting Officer and shall be tested by the Contractor's testing laboratory for conformance with specification requirements. Fly ash being check tested shall not be used in the work prior to completion of the series of tests specified in ASTM C311, paragraph 6.1. Fly ash failing to meet the test requirements shall be promptly removed from the site or in the case of ready mixed concrete, shall be segregated at the batching plant as directed.

2.2.3 Pozzolan Blend

Pozzolan may be blended with Type I or II Portland cement. When a pozzolan is used in a flexural strength concrete mix design, the solid volume of pozzolan when combined with portland cement shall not exceed 25 percent of the solid volume of portland cement plus pozzolan. Only one class of pozzolan, from a single source, may be used.

2.3 AGGREGATES

Aggregates shall conform to the following:

2.3.1 Normal Weight Aggregate

ASTM C 33. Coarse aggregate shall be well graded from fine to coarse within prescribed limits. Aggregate for drilled piers shall be 3/4-inch maximum. Maximum nominal coarse aggregate size shall be 1-1/2 inches except as follows:

a. Nominal maximum size of aggregate shall be not larger than 1/5 the narrowest dimension between the sides of the forms of the member for which concrete is to be used nor larger than 3/4 the minimum clear spacing between bars.

b. Nominal maximum size of aggregate shall be not larger than 1/4 the slab thickness and shall not exceed 1-1/2 inches for slabs over 6 inches thick.

c. Where concrete is used as fill for lintel blocks, and other masonry units designated to be filled, the maximum size shall not exceed 1/2-inch.

2.4 CURING MATERIALS

2.4.1 Burlap

FS CCC-C-467.

2.4.2 Impervious Sheets

ASTM C 171, type optional, except that polyethylene film, if used, shall be white opaque.

2.4.3 Membrane-Forming Compounds

ASTM C 309, Type 1-D, Class A or B.

2.5 EMBEDDED ITEMS

Embedded items shall be of the size and type indicated or as needed for the application

2.6 NONSHRINK GROUT

Nonshrink grout shall conform to ASTM C 1107 Grade A and shall be a formulation suitable for the application.

2.7 FLOOR HARDENER

Floor hardener shall be a colorless aqueous solution containing zinc silicofluoride, magnesium silicofluoride, or sodium silicofluoride. These silicofluoride can be used individually or in combination. Proprietary hardeners may be used if approved by the contracting officer.

2.8 VAPOR BARRIER

Vapor barrier shall be polyethylene sheeting with a minimum thickness of 0.152 mm (6 mils) or other equivalent material having a vapor permeance rating not exceeding 0.5 perms as determined in accordance with ASTM E 96.

2.9 WATER

Water shall be potable, except that nonpotable water may be used if it produces mortar cubes having 7- and 28-day strengths at least 90 percent of the strength of similar specimens made with water from a municipal supply. The strength comparison shall be made on mortars, identical except for mixing water, prepared and tested in accordance with ASTM C 109. Water for curing shall not contain any substance injurious to concrete, or which causes staining. Water containing chloride salts shall not be used.

PART 3 EXECUTION

3.1 PREPARATION OF SURFACES

Surfaces to receive concrete shall be clean and free from frost, ice, mud, and water. Conduit and other similar items shall be in place and clean of any deleterious substance.

3.1.1 Foundations

Earthwork shall be as specified in Section 02221 EXCAVATION, FILLING, AND BACKFILLING FOR BUILDINGS. Flowing water shall be diverted without washing over freshly deposited concrete. Semiporous subgrades for foundations and footings shall be damp when concrete is placed. Pervious subgrades shall be sealed by blending impervious material with the top 150 mm (6 inches) of the in-place pervious material or by covering with an impervious membrane.

3.1.2 Vapor Barrier

Unless otherwise indicated, subgrades for slabs in buildings shall be covered with a vapor barrier. Vapor barrier edges shall be lapped at least 100 mm (4 inches) and ends shall be lapped not less than 150 mm (6 inches.) Patches and lapped joints shall be sealed with pressure-sensitive adhesive or tape not less than 50 mm (2 inches) wide and compatible with the membrane.

3.1.3 Preparation of Previously Placed Concrete

Concrete surfaces to which other concrete is to be bonded shall be roughened in an approved manner that will expose sound aggregate uniformly without damaging the concrete. Laitance and loose particles shall be removed. Surfaces shall be moist but without free water when concrete is placed.

3.2 INSTALLATION OF EMBEDDED ITEMS

Embedded items shall be free from oil, loose scale or rust, and paint. Embedded items shall be installed at the locations indicated and required to serve the intended purpose. Voids in sleeves, slots and inserts shall be filled with readily removable material to prevent the entry of concrete.

3.3 BATCHING, MIXING AND TRANSPORTING CONCRETE

Ready-mixed concrete shall be batched, mixed and transported in accordance with ASTM C 94, except as otherwise specified. Truck mixers, agitators, and nonagitating units shall comply with NRMCA TMMB 1. Ready-mix plant equipment and facilities shall be certified in accordance with NRMCA QC 3. Site-mixed concrete shall be mixed in accordance with ACI 301. On-site plant shall conform to the NRMCA CPMB 100.

3.3.1 Admixtures

Admixtures shall be batched within an accuracy of 3 percent. Where two or more admixtures are used in the same batch, they shall be batched separately and must be compatible. Retarding admixture shall be added within one minute after addition of water is complete or in the first quarter of the required mixing time, whichever is first. Superplasticizing admixtures shall be added as per manufacturer's recommendations at the project site, by a representative of the concrete supplier, and the concrete with the admixture shall be mixed 4 to 5 minutes before placing or as recommended by manufacturer. Concrete that shows evidence of total collapse or segregation caused by the use of admixture shall be removed from the site.

3.3.2 Control of Mixing Water

No water from the truck system or elsewhere shall be added after the initial introduction of mixing water for the batch except when on arrival at the jobsite, the slump of the concrete is less than that specified. Water added to bring the slump within the specified range shall not change the total water in the concrete to a point that the approved water-cement ratio is exceeded. The drum shall be turned an additional 30 revolutions, or more, if necessary, until the added water is uniformly mixed into the concrete. Water shall not be added to the batch at any later time.

3.4 SAMPLING AND TESTING

Sampling and Testing is the responsibility of the Contractor and shall be performed by an approved testing agency.

3.4.1 Aggregates

Aggregates for normal weight concrete shall be sampled and tested in accordance with ASTM C 33. Gradation tests shall be performed on the first day and every other day thereafter during concrete construction.

3.4.2 Sampling of Concrete

Samples of concrete for air, slump, unit weight, and strength tests shall be taken in accordance with ASTM C 172.

3.4.2.1 Air Content

Test for air content shall be performed in accordance with ASTM C 173 or ASTM C 231. A minimum of one test shall be conducted on a randomly selected batch of each strength of concrete during each day's concrete placement.

3.4.2.2 Slump

At least 2 slump tests shall be made on randomly selected batches of each mixture of concrete during each day's concrete placement. Tests shall be performed in accordance with ASTM C 143.

3.4.3 Evaluation and Acceptance of Concrete

3.4.3.1 Frequency of Testing

Samples for strength tests of each class of concrete placed each day shall be taken not less than once a day, nor less than once for each 100 cubic meters (150 cubic yards) of concrete, nor less than once for each 450 square meteres (5000 square feet) of surface area for slabs or walls. If this sampling frequency results in less than 5 strength tests for a given class of concrete, tests shall be made from at least 5 randomly selected trucks or from each truck if fewer than 5 truck loads are used. Field cured specimens for determining form removal time or when a structure may be put in service shall be made in numbers directed to check the adequacy of curing and protection of concrete in the structure. The specimens shall be removed from the molds at the age of 24 hours and shall be cured and protected, insofar as practicable, in the same manner as that given to the portion of the structure the samples represent.

3.4.3.2 Testing Procedures

Cylinders and beams for acceptance tests shall be molded and cured in accordance with ASTM C31. Cylinders shall be tested in accordance with ASTM C39 and beams shall be tested in accordance with ASTM C78. A sample set for comressive testing shall consist of four cylinders. A sample set for flexural testing shall consist of two beams. All cylinders or beams in a sample set shall be made from the same sample of concrete. For compressive testing, a strength shall be the average of the the strengths of two cylinders tested at 28 days. One of the two remaining cylinders shall be tested at 7 days and the other shall be reserved for future testing as required. For flexural testing, a strength shall be the average of the strengths of the two beams tested at 28 days.

3.4.3.3 Evaluation of Results

Evaluation of compressive strength of concrete shall be based on 28 day strength tests only. Concrete specified on the basis of compressive strength will be considered satisfactory if the averages of all sets of three consecutive strength test results equal or exceed the specified strength and no individual strength test result falls below the required strength by more than 3.4 MPa. (500 pounds per square inch.)

3.4.4 Investigation of Low-Strength Test Results

When any strength test of standard-cured test cylinder falls below the specified strength requirement by more than 3.4 MPa. (500 pounds per square inch), or if tests of field-cured cylinders indicate deficiencies in protection and curing, steps shall be taken to assure that load-carrying capacity of the structure is not jeopardized. Nondestructive testing in accordance with ASTM C 597, ASTM C 803 or ASTM C 805 may be permitted by the Contracting Officer to determine the relative strengths at various locations in the structure as an aid in evaluating concrete strength in place or for selecting areas to be cored. Such tests, however, shall not be used as a basis for acceptance or rejection. When strength of concrete in place is considered potentially deficient, cores shall be obtained and tested in accordance with ASTM C 42. At least three representative cores shall be taken from each member

or area of concrete in place that is considered potentially deficient. The location of cores shall be determined by the Contracting Officer to least impair the strength of the structure. If the concrete in the structure will be dry under service conditions, the cores shall be air dried (temperature 16 to 27 degrees C (60 to 80 degrees F), relative humidity less than 60 percent) for seven days before testing and shall be tested dry. If the concrete in the structure will be more than superficially wet under service conditions, the cores shall be tested after moisture conditioning in accordance with ASTM C 42. Concrete in the area represented by the core testing will be considered adequate if the average strength of the cores is equal to or at least 85 percent of the specified strength requirement and if no single core is less than 75 percent of the specified strength requirement. If the core tests are inconclusive or impractical to obtain, or if structural analysis does not confirm the safety of the structure, load tests may be directed by the Contracting Officer in accordance with the requirements of ACI 318. Concrete work evaluated by structural analysis or by results of a load test and found deficient shall be corrected in a manner satisfactory to the Contracting Officer. All investigations, testing, load tests, and correction of deficiencies shall be performed, and approved by the Contracting Officer, at the expense of the Contractor.

3.5 CONVEYING CONCRETE

Concrete shall be conveyed from mixer to forms as rapidly as possible and within the time interval specified in paragraph CONCRETE PLACEMENT by methods which will prevent segregation or loss of ingredients.

3.5.1 Chutes

When concrete can be placed directly from a truck mixer or other transporting equipment, chutes attached to this equipment may be used. Separate chutes will not be permitted except when specifically approved.

3.5.2 Buckets

Bucket design shall be such that concrete of the required slump can be readily discharged. Bucket gates shall be essentially grout tight when closed. The bucket shall provide means for positive regulations of the amount and rate of deposit of concrete in each dumping position.

3.5.3 Belt Conveyors

Belt conveyors may be used when approved. Belt conveyors shall be designed for conveying concrete and shall be operated to assure a uniform flow of concrete to the final place of deposit without segregation or loss of mortar. Conveyors shall be provided with positive means for preventing segregation of the concrete at transfer points and point of placement.

3.5.4 Pumps

Concrete may be conveyed by positive displacement pumps when approved. Pump shall be the piston or squeeze pressure type. Pipeline shall be steel pipe or heavy duty flexible hose. Inside diameter of the pipe shall be at least three times the maximum size of the coarse aggregate. Distance to be pumped shall not exceed the limits recommended by the pump manufacturer. Concrete shall be supplied to the pump continuously. When pumping is completed, the concrete remaining in the pipeline shall be ejected without contaminating the concrete in place. After each use, the equipment shall be thoroughly cleaned. Flushing water shall be wasted outside the forms.

3.6 CONCRETE PLACEMENT

Mixed concrete which is transported in truck mixers or agitators or concrete which is truck mixed, shall be discharged within 1-1/2 hours or before the drum has revolved 300 revolutions, whichever comes first after the introduction of the mixing water to the cement and aggregates or the

introduction of the cement to the aggregates. These limitations may be waived by the Government if the concrete is of such slump after the 1-1/2 hour time or 300 revolution limit has been reached that it can be placed, without the addition of water to the batch. When the concrete temperature exceeds 29 degrees C (85 degrees F), the time shall be reduced to 45 minutes. Concrete shall be placed within 15 minutes after it has been discharged from the truck.

3.6.1 Placing Operation

Concrete shall be handled from mixer to forms in a continuous manner until the approved unit of operation is completed. Adequate scaffolding, ramps and walkways shall be provided so that personnel and equipment are not supported by in-place reinforcement. Placing will not be permitted when the sun, heat, wind, or limitations of facilities furnished by the Contractor prevent proper consolidation, finishing and curing. Concrete shall be deposited as close as possible to its final position in the forms, and there shall be no vertical drop greater than 2.5 meters (8 feet) except where suitable equipment is provided to prevent segregation and where specifically authorized. Depositing of the concrete shall be so regulated that it will be effectively consolidated in horizontal layers not more than 300 mm (12 inches) thick, except that all slabs shall be placed in a single layer. Concrete to receive other construction shall be screeded to the proper level to avoid excessive shimming or grouting.

3.6.2 Consolidation

Immediately after placing, each layer of concrete shall be consolidated by internal vibrators, except for slabs 100 mm (4 inches) or less. The vibrators shall at all times be adequate in effectiveness and number to properly consolidate the concrete; a spare vibrator shall be kept at the jobsite during all concrete placing operations. The vibrators shall have a frequency of not less than 8000 vibrations per minute, and the head diameter and amplitude shall be appropriate for the concrete mixture being placed. Vibrators shall be inserted vertically at uniform spacing over the area of placement. The distance between insertions shall be approximately 1-1/2 times the radius of action of the vibrator so that the area being vibrated will overlap the adjacent just-vibrated area by a few inches. The vibrator shall penetrate rapidly to the bottom of the layer and at least 150mm (6 inches) into the preceding layer if there is such. Vibrator shall be held stationary until the concrete is consolidated and then withdrawn slowly. The use of form vibrators must be specifically approved. Vibrators shall not be used to transport concrete within the forms. Slabs 100 (4 inches) and less in thickness shall be consolidated by properly designed vibrating screeds or other approved technique. Excessive vibration of lightweight concrete resulting in segregation and flotation of coarse aggregate shall be avoided.

3.6.3 Cold Weather Requirements

Special protection measures, conforming to ACI 306R and approved by the Contracting Officer, shall be used if freezing temperatures are anticipated before the expiration of the specified curing period. The ambient temperature of the air where concrete is to be placed and the temperature of surfaces to receive concrete shall be not less than 4 degress C (40 degrees F.) The temperature of the concrete when placed shall be not less than 10 degress C (50 degrees F) nor more than 24 degrees C (75 degrees F.) Heating of the mixing water or aggregates will be required to regulate the concrete placing temperature. Materials entering the mixer shall be free from ice, snow, or frozen lumps. Salt shall not be incorporated in the concrete to prevent freezing. Upon written approval, chemical admixture conforming to ASTM C 494 Type C or E may be used.

3.6.4 Warm Weather Requirements

Concrete shall be placed in accordance with ACI 305R. During periods of warm weather, the following precautions shall be taken to prevent the formation of plastic-shrinkage cracks resulting from excessive loss of moisture from the concrete:

a. The Base or subgrade materials that will not be covered by vapor barrier or similar material shall be cooled by sprinkling or fogging with water immediately before the placement of concrete.

b. All concrete shall be delivered to the forms at a temperature below 30 degrees C. (85 degrees F.), except that concrete with retarding admixtures may have temperatures of 30 to 34 degrees C. (85° to 90° F) as deposited in the forms.

c. Placement may be allowed only at night or in early morning hours if necessary to maintain the concrete temperature and keep forms cool.

d. The concrete shall be placed and finished as rapidly as practicable and curing will start immediately after final finishing has been completed on any section of a floor or placement.

e. The finished surface of the concrete shall be kept damp by applying a water fog or mist with approved spraying equipment until mats can be applied as required by the moist curing method.

f. Curing for the first 24 hours after placement shall be by the moist curing method. After this initial curing period any of the specified methods may be used for the remaining period of curing.

3.6.5 Floor Slabs on Grade

3.6.5.1 Vapor Barrier

Immediately before placing concrete, the capillary water barrier or subgrade under slabs in buildings shall be covered with a vapor barrier unless membrane waterproofing is indicated. Punctures and tears during subsequent operations shall be patched. Edges shall be lapped not less than 100 mm (4 inches) and ends not less than 150 mm (6 inches). Patches and lapped joints shall be sealed with a pressure-sensitive adhesive or pressure-sensitive tape, not less than 50 mm (2 inches) wide and compatible with the membrane.

3.6.5.2 Placement

Placement of concrete shall be continuous so that each unit of operation will be monolithic. Concrete shall be consolidated, screeded to grade, and prepared for the specified finish. Crack control shall be provided by construction joints at the perimeter of individual panels placed in checkerboard fashion, or by longitudinal construction joints and transverse contraction joints if lane placement is used. Lanes shall be one panel wide. Joints shall be located at column centerlines and intermidiate intervals so that each panel shalll be not more than 625 square feet in area. Panels shall be approximately square with no side longer than 7.5 meters (25 feet.) Square-shaped isolation joints shall be provided for the full slab depth at columns on separate footings, and shall be constructed so that corners of isolation joints will meet at crack control joints. Where columns bear on thickened slabs or thickened edges, contraction or expansion joints shall be offset from these locations. Forms shall remain in place for at least 24 hours after concrete placement.

3.6.5.3 Expansion and Contraction Joints

Specified in SECTION 03250 - EXPANSION JOINTS, CONTRACTION JOINTS, AND WATERSTOPS.

3.6.6 Ribbed Mat Foundations

Immediately before placing concrete, the capillary water barrier or subgrade under slabs in buildings shall be covered with a vapor barrier, unless membrane waterproofing is indicated, in accordance with the PART 3 PREPARATION OF SURFACES's subparagraph "Vapor Barrier." Placement of concrete shall be continuous so that each unit of operation will be monolithic. Concrete shall be consolidated, screeded to grade, and prepared for the specified finish. Crack control shall be provided by construction joints placed in checkerboard fashion. Joints shall be located as shown on the drawings. Forms shall remain in place for at least 24 hours after concrete placement.

3.6.6.1 Construction Joints

Construction joints shall be finished with an edging tool having 1/8-inch radius, except where a floor covering will be applied. Reinforcing shall be continuous through all construction joints. Where the joint is to receive a sealant, filler strips shall be installed at the proper level below the finished floor with a slightly tapered, dressed-and-oiled wood strip temporarily secured to the top thereof to form a recess 1/2 inch wide by 3/4 inch deep, which shall be filled with sealant, as specified in Section 03250 - EXPANSION JOINTS, CONTRACTION JOINTS AND WATERSTOPS. The wood strip shall be removed after the concrete has set. In lieu of the wood strip a removable expansion filler cap designed and fabricated for this purpose may be used.

3.6.6.2 Expansion Joints

Expansion joints are specified in Section 03250 - EXPANSION JOINTS, CONTRACTION JOINTS, AND WATERSTOPS.

3.7 CONSTRUCTION JOINTS

Construction joints shall be located as indicated or approved. Where concrete work is interrupted by weather, end of work shift or other similar type of delay, location and type of construction joint shall be subject to approval of the Contracting Officer. Unless otherwise indicated and except for slabs on grade, reinforcing steel shall extend through construction joints. Construction joints in slabs on grade shall be keyed or doweled as shown. Concrete columns, walls, or piers shall be in place at least 2 hours, or until the concrete is no longer plastic, before placing concrete for beams or slabs thereon. In walls having door window openings, lifts shall terminate at the top and bottom of the opening. Other lifts shall terminate at such levels as to conform to structural requirements or architectural details. Where horizontal [wall] construction joints are required, a strip of 25 mm (1-inch) square-edge lumber, bevelled and oiled to facilitate removal, shall be tacked to the inside of the forms at the construction joint. Concrete shall be placed to a point 25 mm (1-inch) above the underside of the strip. The strip shall be removed 1 hour after the concrete has been placed, and any irregularities in the joint line shall be leveled off with a wood float, and all laitance shall be removed. Prior to placing additional concrete, horizontal construction joints shall be prepared as specified in paragraph PREPARATIONS OF SURFACES.

3.7.1 Construction Joints in Concrete Other Than Slabs on Grade and Ribbed Mat Foundations

The unit of operation shall not exceed 60 feet for foundation walls other foundation work except footings and shall not exceed 60 feet for floor slabs. Concrete shall be placed continuously so that each unit is monolithic in construction. Fresh concrete shall not be placed against adjoining units until they are at least 24 hours old.

3.8 FINISHING CONCRETE

3.8.1 Formed Surfaces

3.8.1.1 Repair of Surface Defects

Surface defects shall be repaired within 24 hours after the removal of forms. Honeycombed and other defective areas shall be cut back to solid concrete or to a depth of not less than 25 mm (1 inch,) whichever is greater. Edges shall be cut perpendicular to the surface of the concrete. The prepared areas shall be dampened and brush-coated with neat cement grout. The repair shall be made using mortar consisting of not more than 1 part cement to 2-1/2 parts sand. The mixed mortar shall be allowed to stand to stiffen (approximately 45 minutes), during which time the mortar shall be intermittently remixed without the addition of water. After the mortar has attained the stiffest consistency that will permit placing, the patching mix shall be thoroughly tamped into place by means approved by the Contracting Officer and finished slightly higher than the surrounding surface. For Class A and Class B finished surfaces the cement used in the patching mortar shall be a blend of job cement and white cement proportioned to produce a finished repair surface matching, after curing, the color of adjacent surfaces. Holes left after the removal of form ties shall be cleaned and filled with patching mortar. Holes left by the removal of tie rods shall be reamed and filled by dry-packing. Repaired surfaces shall be cured as required for adjacent surfaces. The temperature of concrete, mortar patching material, and ambient air shall be above 10 degrees C (50 degrees F) while making repairs and during the curing period. Concrete with defects which affect the strength of the member or with excessive honeycombs will be rejected, or the defects shall be corrected as directed by the Contracting Officer at no additional cost to the Government.

3.8.1.2 Class A Finish

Provide a Class A finish on concrete surfaces of all building ribbed foundations which are above grade and exposed to view. Fins shall be removed on all Class A finish concrete surfaces. A mortar mix consisting of one part portland cement and two parts well-graded sand passing a No. 30 sieve, with water added to give the consistency of thick paint, shall be prepared. White cement shall be used to replace part of the job cement. After the surface has been thoroughly wetted and allowed to approach surface dryness, the mortar shall be vigorously applied to the area by clean burlap pads or by cork or wood-floating, to completely fill all surface voids. Excess grout shall be scraped off with a trowel. As soon as it can be accomplished without pulling the mortar from the voids, the area shall be rubbed with burlap pads until all visible grout film is removed. The rubbing pads shall have on their surfaces the same sand-cement mix specified above but without any mixing water. The finish of any area shall be completed in the same day, and the limits of a finished area shall be made at natural breaks in the surface. The surface shall be continuously moist cured for 48 hours. The temperature of the air adjacent to the surface shall be not less than 50 degrees F for 24 hours prior to, and 48 hours after, the application. In hot, dry weather the smooth finish shall be applied in shaded areas.

3.8.1.3 Class B Finish

Provide a Class B finish on all exterior non-building concrete surfaces including tank surfaces which are above grade and exposed to view. Fins shall be removed on all Class B finish concrete surfaces. Concrete surface shall be smooth with a texture at least equal to that obtained through the use of Grade B-B plywood forms.

3.8.1.4 Class C Finish

Provide a Class D finish on all interior concrete surfaces on tanks and will not be exposed to view. Fins shall be removed on all Class C finish concrete surfaces. Concrete surfaces shall be relatively smooth with a texture imparted by the forms used.

3.8.1.5 Class D Finish

Provide a Class D finish on all exterior concrete surfaces on tanks which are below grade and will not be exposed to view. Fins exceeding 1/4 inch in height shall be chipped or rubbed off on all Class D finish concrete surfaces. Concrete surfaces shall be left with the texture imparted by the forms used.

3.8.2 Unformed Surfaces

In cold weather, the air temperature in areas where concrete is being finished shall not be less than 10 degrees C (50 degrees F.) In hot windy weather when the rate of evaporation of surface moisture, as determined by methodology presented in ACI 305R, may reasonably be expected to exceed 1 kg per square meter per hour (0.2 pounds per square foot per hour); coverings, windbreaks, or fog sprays shall be provided as necessary to prevent premature setting and drying of the surface. The dusting of surfaces with dry materials or the addition of water during finishing will not be permitted. Finished surfaces shall be plane, with no deviation greater than 9 mm (5/16 inch) when tested with a 3 meter (10-foot) straightedge. Surfaces shall be pitched to drains where required in the drawings. Floor tolerance measurements shall be made as soon as possible after finishing. When forms or shoring are used the measurements shall be made prior to their removal.

3.8.2.1 Rough-Slab Finish

3.8.2.2 Float Finish

Slabs to receive a steel trowel finish and tank slabs shall be given a float finish. Screeding shall be followed immediately by darbying or bull floating before bleeding water is present, to bring the surface to a true, even plane. After the concrete has stiffened to permit the operation and the water sheen has disappeared, it shall be wood floated. Concrete that portrays stickiness shall be finished with a magnesium float in lieu of a wood float, and left free of ridges and other projections.

3.8.2.3 Trowel Finish

Interior building floor slabs shall be given a trowel finish immediately following floating. Surfaces shall be trowelled to produce smooth, dense slabs free from blemishes including trowel marks. In lieu of hand finishing, an approved power finishing machine may be used in accordance with the directions of the machine manufacturer. A final hard steel troweling shall be done by hand.

3.8.2.4 Broom Finish

After floating, sidewalk slabs shall be lightly trowelled, and then broomed with a fiber-bristle brush in a direction transverse to that of the main traffic.

3.8.2.5 Floor Hardener

Floor hardener shall be applied to all interior building concrete floor surfaces which are not to receive other floor finishes. Floor hardener shall be applied after the concrete had been air dried for 28 days. Three coats shall be applied, each the day after the preceding coat was applied. For the first application, 0.454 kg (one pound) of the silicoflouride shall be dissolved in 3.8 liters (one gallon of water. For subsequent applications, the solution shall be 0.908 liters (two pounds) of silicofluoride to each 3.8 liters (gallon) of water. Floor should be mopped with clear water shortly after the preceding application

has dried to remove encrusted salts. Proprietary hardeners shall be applied in accordance with the manufacturer's instructions. During application, area should be well ventilated. Precautions shall be taken when applying silicofluorides due to the toxicity of the salts. Any compound that contacts glass or aluminum should be immediately removed with clear water.

3.9 CURING AND PROTECTION

3.9.1 General

All concrete shall be cured by an approved method for the period of time given below:

Concrete with Type III cement	3 days
Concrete with Type I, II, IP or IS cement	7 days
Concrete with Type I or Type II cement blended with pozzolan	7 days

Immediately after placement, concrete shall be protected from premature drying extremes in temperatures, rapid temperature change, mechanical injury and injury from rain and flowing water. Air and forms in contact with concrete shall be maintained at a temperature above 10 degrees C (50 degrees F) for the first 3 days and at a temperature above 0 degrees C (32 degrees F) for the remainder of the specified curing period. Exhaust fumes from combustion heating units shall be vented to the outside of the enclosure and heaters and ducts shall be placed and directed so as not to cause areas of overheating and drying of concrete surfaces or to create fire hazards. All materials and equipment needed for adequate curing and protection shall be available and at the site prior to placing concrete. No fire or excessive heat shall be permitted near or in direct contact with the concrete at any time. Curing shall be accomplished by any of the following methods, or combination thereof, as approved.

3.9.2 Moist Curing

Concrete to be moist-cured shall be maintained continuously wet for the entire curing period. If water or curing materials used stains or discolors concrete surfaces which are to be permanently exposed, the concrete surfaces shall be cleaned. When wooden forms are left in place during curing, they shall be kept wet at all times. If the forms are removed before the end of the curing period, curing shall be carried out as on unformed surfaces, using suitable materials. Horizontal surfaces shall be cured by ponding, by covering with a 50 mm (2-inch) minimum thickness of continuously saturated sand, or by covering with waterproof paper, polyethylene sheet, polyethylene-coated burlap or saturated burlap.

3.9.3 Membrane Curing

Membrane curing shall not be used on surfaces that are to receive any subsequent treatment depending on adhesion or bonding to the concrete; except a styrene acrylate or chlorinated rubber compound meeting ASTM C 309, Class B requirements may be used for surfaces which are to be painted or are to receive bituminous roofing or waterproofing, or floors that are to receive adhesive applications of resilient flooring. The curing compound selected shall be compatible with any subsequent paint, roofing, waterproofing or flooring specified. Membrane curing compound shall not be used on surfaces that are maintained at curing temperatures with free steam. Curing compound shall be applied to formed surfaces immediately after the forms are removed and prior to any patching or other surface treatment except the cleaning of loose sand, mortar, and debris from the surface. Surfaces shall be thoroughly moistened with water and the curing compound shall be applied to slab surfaces as soon

as the bleeding water has disappeared, with the tops of joints being temporarily sealed to prevent entry of the compound and to prevent moisture loss during the curing period. Compound shall be applied in a one-coat continuous operation by mechanical spraying equipment, at a uniform coverage in accordance with the manufacturer's printed instructions. Concrete surfaces which have been subjected to rainfall within 3 hours after curing compound has been applied shall be resprayed by the method and at the coverage specified. On surfaces permanently exposed to view, the surface shall be shaded from direct rays of the sun for the duration of the curing period. Surfaces coated with curing compound shall be kept free of foot and vehicular traffic, and from other sources of abrasion and contamination during the curing period.

3.10 SETTING BASE PLATES AND BEARING PLATES

After being properly positioned, column base plates, bearing plates for beams and similar structural members, and machinery and equipment base plates shall be set to the proper line and elevation with nonshrink grout. The thickness of the grout shall be as indicated on the drawings. Concrete and metal surfaces in contact with grout shall be clean and free of oil and grease, and concrete surfaces in contact with grout shall be damp and free of laitance when grout is placed.

3.10.1 Nonshrink Grout

Nonshrink grout shall be mixed and placed in accordance with material manufacturer's written recommendations. Forms of wood or other suitable material shall be used to retain the grout. The grout shall be placed quickly and continuously, completely filling the space without segregation or bleeding of the mix.

3.10.2 Treatment of Exposed Surfaces

For metal-oxidizing nonshrink grout, exposed surfaces shall be cut back 25 mm (1 inch) and immediately covered with a parget coat of mortar consisting of 1 part portland cement and 2-1/2 parts fine aggregate by weight, with sufficient water to make a plastic mixture. The parge coat shall have a smooth finish. For other mortars or grouts, exposed surfaces shall be left untreated. Curing shall comply with paragraph CURING AND PROTECTION.

- - o 0 o - -

SECTION 04200

MASONRY

PART 1 GENERAL

1.1 REFERENCES

The publications listed below form a part of this specification to the extent referenced. The publications are referred to in the text by basic designation only.

AMERICAN CONCRETE INSTITUTE (ACI)

ACI SP-66	(1988) ACI Detailing Manual.

AMERICAN SOCIETY FOR TESTING AND MATERIALS (ASTM)

ASTM A 615	(1992b) Deformed and Plain Billet-Steel Bars for Concrete Reinforcement.
ASTM C 55	(1985) Concrete Building Brick.
ASTM C 129	(1985; R 1990) Non-Load-Bearing Concrete Masonry Units.
ASTM C 140	(1991) Sampling and Testing Concrete Masonry Units.
ASTM C 150	(1992) Standard Specification for Portland Cement
ASTM C 270	(1991a) Mortar for Unit Masonry.
ASTM C 476	(1991) Grout for Masonry.
ASTM C 494	(1990) Chemical Admixtures for Concrete.
ASTM C 578	(1987a) Preformed, Cellular Polystyrene Thermal Insulation.
ASTM C 641	(1982; R 1991) Staining Materials in Lightweight Concrete Aggregates.
ASTM C 780	(1991) Preconstruction and Construction Evaluation of Mortars for Plain and Reinforced Unit Masonry.
ASTM C 1019	(1989a) Sampling and Testing Grout.
ASTM C 1072	(1986) Measurement of Masonry Flexural Bond Strength.
ASTM E 447	(1984; R 1991) Compressive Strength of Masonry Prisms.

1.2 SUBMITTALS

The following shall be submitted in accordance with SECTION 01300 - SUBMITTALS:

SD-01, Data

Concrete Brick.

Masonry Work.

Drawings including plans, elevations, and details of wall reinforcement; details of reinforcing bars at corners and wall intersections; offsets; tops, bottoms, and ends of walls; control and expansion joints; and wall openings. Bar splice locations shall be shown. Bent bars shall be

identified on a bending diagram and shall be referenced and located on the drawings. Wall dimensions, bar clearances, and wall openings greater than one masonry unit in area shall be shown. No approval will be given to the shop drawings until the Contractor certifies that all openings exceeding size requirements listed above, including those for mechanical and electrical service, are shown. If, during construction, additional masonry openings are required, the approved shop drawings shall be resubmitted with the additional openings shown along with the proposed changes. Location of these additional openings shall be clearly highlighted. The minimum scale for wall elevations shall be 1/4 inches per foot. Reinforcement bending details shall conform to the requirements of ACI SP-66.

SD-08, Statements

Cold Weather Installation.

Cold weather construction procedures.

SD-09, Reports

Efflorescence Test.

Field Testing of Mortar.

Field Testing of Grout.

Prism tests.

Masonry Cement.

Test reports from an approved independent laboratory. Test reports on a previously tested material shall be certified as the same as that proposed for use in this project.

SD-13, Certificates

Concrete Brick.

Concrete Masonry Units (CMU).

Anchors, Ties, and Bar Positioners.

Expansion-Joint Materials.

Joint Reinforcement.

Reinforcing Steel Bars and Rods.

Masonry Cement.

Mortar Admixtures.

Grout Admixtures.

Certificates of compliance stating that the materials meet the specified requirements.

SD-14, Samples

Concrete Masonry Units (CMU).

Anchors, Ties, and Bar Positioners.

Two of each type used.

Expansion-Joint Material.

One piece of each type used.

Joint Reinforcement.

One piece of each type used, including corner and wall intersection pieces, showing at least two cross wires.

1.3 DELIVERY, HANDLING, AND STORAGE

Materials shall be delivered, handled, stored, and protected to avoid chipping, breakage, and contact with soil or contaminating material.

1.3.1 Masonry Units

Concrete masonry units shall be covered or protected from inclement weather and shall conform to the moisture content as specified in ASTM C 90 when delivered to the jobsite.

1.3.2 Reinforcement, Anchors, and Ties

Steel reinforcing bars, coated anchors, ties, and joint reinforcement shall be stored above the ground. Steel reinforcing bars and uncoated ties shall be free of loose mill scale and rust.

1.3.3 Cementitious Materials, Sand and Aggregates

Cementitious and other packaged materials shall be delivered in unopened containers, plainly marked and labeled with manufacturers' names and brands. Cementitious material shall be stored in dry, weathertight enclosures or be completely covered. Cement shall be handled in a manner that will prevent the inclusion of foreign materials and damage by water or dampness. Sand and aggregates shall be stored in a manner to prevent contamination or segregation.

PART 2 PRODUCTS

2.1 GENERAL REQUIREMENTS

The source of materials which will affect the appearance of the finished work shall not be changed after the work has started except with Contracting Officer's approval.

2.2 CEMENT

Portland cement: ASTM C150, Type I, II, including the requirements for low alkali cement (0.6 percent or less). Cement shall be of one brand. Masonry cement is not permitted.

2.3 CONCRETE BRICK

Concrete brick shall conform to ASTM C 55, S-II. Concrete brick may be used where necessary for filling out in concrete-masonry unit construction.

2.4 CONCRETE MASONRY UNITS (CMU)

Hollow and solid concrete masonry units shall conform to ASTM C 90, Type I, medium weight. The linear drying shrinkage shall not exceed 0.045 percent when tested in accordance with ASTM C 426. Cement shall have a low alkali content and be of one brand. All exterior above grade concrete masonry units shall be integral water repellant type. Integral water repellant shall be a liquid polymeric admixture.

2.4.1 Aggregates

Lightweight aggregates and blends of lightweight and heavier aggregates in proportions used in producing the units, shall comply with the following requirements when tested for stain-producing iron compounds in accordance with ASTM C 641 by visual classification method, the iron stain deposited on the filter paper shall not exceed the "light stain" classification.

2.4.2 Kinds and Shapes

Units shall be modular in size and shall include closer, jamb, header, lintel, and bond beam units and special shapes and sizes to complete the work as indicated. In exposed interior masonry surfaces, units having a bullnose shall be used for vertical external corners except at door, window, and louver jambs. Radius of the bullnose shall be one inch. Units used in exposed masonry surfaces in any one building shall have a uniform fine to medium texture and a uniform color.

2.5 MORTAR

Mortar shall be Type N in accordance with the proportion specification of ASTM C 270 except Type S cement-lime mortar proportions shall be 1 part cement, 1/2 part lime and 4-1/2 parts aggregate; Type N cement-lime mortar proportions shall be 1 part cement, 1 part lime and 6 parts aggregate. Evaluation of performance shall be based on ASTM C 780 and ASTM C 1072. Cement shall have a low alkali content and be of one brand. Aggregates shall be from one source.

2.5.1 Admixtures

The mortar shall contain the manufacturer's recommended amount of liquid polymeric integral water repellant mortar admixtures for water repllancy and assure proper bond strength. Follow manufacturer's instructions pertaining to critical temperatures for mixing mortar with integral water repellant admixture. In cold weather, a non-chloride based accelerating admixture may be used subject to approval. Accelerating admixture shall be non-corrosive, contain less than 0.2 percent chlorides, conform to ASTM C 494, Type C, and be compatible with the water repellant admixture.

2.6 GROUT

Grout shall conform to ASTM C 476. Cement used in grout shall have a low alkali content. Grout slump shall be between 8 and 10 inches. Grout shall be used subject to the limitations of Table II. Proportions shall not be changed and materials with different physical or chemical characteristics shall not be used in grout for the work unless additional evidence is furnished that the grout meets the specified requirements.

2.6.1 Admixtures

In cold weather, a non-chloride based accelerating admixture may be used subject to approval. Accelerating admixture shall be non-corrosive, contain less than 0.2 percent chlorides, and conform to ASTM C 494, Type C.

2.6.2 Grout Barriers

Grout barriers for vertical cores shall consist of fine mesh wire, fiberglass, or expanded metal.

2.7 ANCHORS, TIES, AND BAR POSITIONERS

Anchors and ties shall be fabricated without drips or crimps and shall be zinc-coated in accordance with ASTM A 153, Class B-2. Steel wire used for anchors and ties shall be fabricated from steel wire conforming to ASTM A 82. Anchors and ties shall be sized to provide a minimum of 5/8 inch mortar cover from either face.

2.7.1 Bar Positioners

Bar positioners, used to prevent displacement of reinforcing bars during the course of construction, shall be factory-fabricated from 9-gauge steel wire or equivalent, and coated with a hot-dip galvanized finish. Not more than one wire shall cross the cell.

2.8 JOINT REINFORCEMENT

Joint reinforcement shall be factory-fabricated from steel wire conforming to ASTM A 82, welded construction. Tack welding will not be acceptable in reinforcement used for wall ties. Wire shall have zinc coating conforming to ASTM A 153, class B-2. All wires shall be a minimum of 9 gauge. Reinforcement shall be ladder type design, having one longitudinal wire in the mortar bed of each face shell for hollow units and one wire for solid units. Joint reinforcement shall be placed as to ensure a minimum of 5/8 inch cover from either face. The distance between crosswires shall not exceed 16 inches. Joint reinforcement for straight runs shall be furnished in flat sections not less than 10 feet long. Joint reinforcement shall be provided with factory-formed corners and intersections.

2.9 REINFORCING STEEL BARS AND RODS

Reinforcing steel bars and rods shall conform to ASTM A 615, Grade 60.

2.10 EXPANSION-JOINT MATERIALS

Backer rod and sealant shall be adequate to accommodate joint compression equal to 50 percent of the width of the joint. The backer rod shall be compressible rod stock of polyethylene foam, polyurethane foam, butyl rubber foam, or other flexible, nonabsorptive material as recommended by the sealant manufacturer. Sealant shall conform to Section 07920 - CAULKING AND SEALANTS.

PART 3 EXECUTION

3.1 ENVIRONMENTAL REQUIREMENTS

3.1.1 Hot Weather Installation

The following precautions shall be taken if masonry is erected when the ambient air temperature is more than 99 degrees F in the shade and the relative humidity is less than 50 percent. All masonry materials shall be shaded from direct sunlight; mortar beds shall be spread no more than 4 feet ahead of masonry; masonry units shall be set within one minute of spreading mortar; and after erection, masonry shall be protected from direct exposure to wind and sun for 48 hours.

3.1.2 Cold Weather Installation

Before erecting masonry when ambient temperature or mean daily air temperature falls below 40 degrees F, a written statement of proposed cold weather construction procedures shall be submitted for approval. The following precautions shall be taken during all cold weather erection.

3.1.2.1 Preparation

Ice or snow formed on the masonry bed shall be thawed by the application of heat. Heat shall be applied carefully until the top surface of the masonry is dry to the touch. Sections of masonry deemed frozen and damaged shall be removed before continuing construction of those sections.

3.1.2.2 Air Temperature 40 Degrees F to 32 Degrees F

Sand or mixing water shall be heated to produce mortar temperatures between 40 degrees F and 120 degrees F.

3.1.2.3 Air Temperature 32 Degrees F to 25 Degrees F

Sand and mixing water shall be heated to produce mortar temperatures between 40 degrees F and 120 degrees F. Temperature of mortar on boards shall be maintained above freezing.

3.1.2.4 Air Temperature 25 Degrees F to 20 Degrees F

Sand and mixing water shall be heated to provide mortar temperatures between 40 degrees F and 120 degrees F. Temperature of mortar on boards shall be maintained above freezing. Sources of heat shall be used on both sides of walls under construction. Windbreaks shall be employed when wind is in excess of 15 mph.

3.1.2.5 Air Temperature 20 Degrees F and Below

Sand and mixing water shall be heated to provide mortar temperatures between 40 degrees F and 120 degrees F. Enclosure and auxiliary heat shall be provided to maintain air temperature above 32 degrees F. Temperature of units when laid shall not be less than 20 degrees F.

3.1.2.6 Completed Masonry and Masonry Not Being Worked On

a. Mean daily air temperature 40 degrees F to 32 degrees F. Masonry shall be protected from rain or snow for 24 hours by covering with weather-resistive membrane.

b. Mean daily air temperature 32 degrees F to 25 degrees F. Masonry shall be completely covered with weather-resistant membrane for 24 hours.

c. Mean Daily Air Temperature 25 Degrees F to 20 Degrees F. Masonry shall be completely covered with insulating blankets or equally protected for 24 hours.

d. Mean Daily Temperature 20 Degrees F and Below. Masonry temperature shall be maintained above 32 degrees F for 24 hours by enclosure and supplementary heat, by electric heating blankets, infrared heat lamps, or other approved methods.

3.2 LAYING MASONRY UNITS

Masonry units shall be laid in running bond pattern. Facing courses shall be level with back-up courses, unless the use of adjustable ties has been approved in which case the tolerances shall be plus or minus 1/2-inch. Each unit shall be adjusted to its final position while mortar is still soft and plastic. Units that have been disturbed after the mortar has stiffened shall be removed, cleaned, and relaid with fresh mortar. Air spaces, cavities, chases, expansion joints, and spaces to be grouted shall be kept free from mortar and other debris. Units used in exposed masonry surfaces shall be free from chipped edges or other imperfections detracting from the appearance of the finished work. Vertical joints shall be kept plumb. Units being laid and surfaces to receive units shall be free of water film and frost. Solid units shall be laid in a nonfurrowed full bed of mortar. Mortar for veneer wythes shall be beveled and sloped toward the center of the wythe from the cavity side. Units shall be shoved into place so that the vertical joints are tight. Vertical joints of brick and the vertical face shells of concrete masonry units, except where indicated at control, expansion, and isolation joints, shall be completely filled with mortar. Mortar will be permitted to protrude up to 1/2-inch into the space or cells to be grouted. Means shall be provided to prevent mortar from dropping into the space below.

3.2.1 Surface Preparation

Surfaces upon which masonry is placed shall be cleaned of laitance, dust, dirt, oil, organic matter, or other foreign materials and shall be slightly roughened to provide a surface texture with a depth of at least 1/8-inch. Sandblasting shall be used, if necessary, to remove laitance from pores and to expose the aggregate.

3.2.2 Forms and Shores

Forms and shores shall be sufficiently rigid to prevent deflections which may result in cracking or other damage to supported masonry and

sufficiently tight to prevent leakage of mortar and grout. In no case shall supporting forms or shores be removed in less than 10 days.

3.2.3 Concrete Masonry Units

Units in beams and where cells are to be filled with grout shall be full bedded in mortar under both face shells and webs. Other units shall be full bedded under both face shells. Head joints shall be filled solidly with mortar for a distance in from the face of the unit not less than the thickness of the face shell. Solid units may be incorporated in the masonry work where necessary to fill out at corners, gable slopes, and elsewhere as approved.

3.2.3.1 Solid Units

Bed, head, and collar joints shall be completely filled with mortar.

3.2.3.2 Hollow Units

Hollow units shall be laid as specified for concrete masonry units.

3.2.4 Tolerances

Masonry shall be laid plumb, true to line, with courses level. Bond pattern shall be kept plumb throughout. Corners shall be square unless noted otherwise. Except for walls constructed of prefaced concrete masonry units, masonry shall be laid within the following tolerances (plus or minus unless otherwise noted):

TABLE I
TOLERANCES

Variation from the plumb in the lines and surfaces of columns, walls and arises	
In adjacent masonry units	1/8-inch
In 10 feet	1/4-inch
In 20 feet	3/8-inch
In 40 feet or more	1/2-inch
Variations from the plumb for external corners, expansion joints, and other conspicuous lines	
In 20 feet	1/4-inch
In 40 feet or more	1/2-inch
Variations from the level for exposed lintels, sills, parapets, horizontal grooves, and other conspicuous lines	
In 20 feet	1/4-inch
In 40 feet or more	1/2-inch
Variation from level for bed joints and top surfaces of bearing walls	
In 10 feet	1/4-inch
In 40 feet or more	1/2-inch
Variations from horizontal lines	
In 10 feet	1/4-inch
In 20 feet	3/8-inch
In 40 feet or more	1/2-inch

Variations in cross sectional dimensions of columns and in thickness of walls	
Minus	1/4-inch
Plus	1/2-inch

3.2.5 Cutting and Fitting

Full units of the proper size shall be used wherever possible, in lieu of cut units. Cutting and fitting, including that required to accommodate the work of others, shall be done by masonry mechanics using power masonry saws. Concrete masonry units may be wet or dry cut, except exterior integral color units shall not be wet cut. Wet cut units, before being placed in the work, shall be dried to the same surface-dry appearance as uncut units being laid in the wall. Cut edges shall be clean, true and sharp. Openings in the masonry shall be made carefully so that wall plates, cover plates or escutcheons required by the installation will completely conceal the openings and will have bottoms parallel with the masonry bed joints. Reinforced masonry lintels shall be provided above openings over 12 inches wide for pipes, ducts, cable trays, and other wall penetrations, unless steel sleeves are used.

3.2.6 Jointing

Joints shall be tooled when the mortar is thumbprint hard. Horizontal joints shall be tooled last. Joints shall be brushed to remove all loose and excess mortar. Mortar joints shall be finished as follows:

3.2.6.1 Flush Joints

Joints in concealed masonry surfaces and joints at electrical outlet boxes in wet areas shall be flush cut. Flush cut joints shall be made by cutting off the mortar flush with the face of the wall.

3.2.6.2 Tooled Joints

Joints in exposed interior masonry surfaces shall be tooled slightly concave. Joints shall be tooled with a jointer slightly larger than the joint width so that complete contact is made along the edges of the unit. Tooling shall be performed so that the mortar is compressed and the joint surface is sealed. Jointer of sufficient length shall be used to obtain a straight and true mortar joint.

3.2.7 Joint Widths

Joint widths shall be as follows:

3.2.7.1 Concrete Masonry Units

Concrete masonry units shall have 3/8-inch joints, except for prefaced concrete masonry units.

3.2.8 Embedded Items

Spaces around built-in items shall be filled with mortar. Openings around flush-mount electrical outlet boxes in wet locations shall be pointed with mortar. Anchors, ties, wall plugs, accessories, flashing, pipe sleeves and other items required to be built-in shall be embedded as the masonry work progresses. Anchors, ties and joint reinforcement shall be fully embedded in the mortar. Cells receiving anchor bolts and cells of the first course below bearing plates shall be filled with grout.

3.2.9 Unfinished Work

Unfinished work shall be stepped back for joining with new work. Toothing may be resorted to only when specifically approved. Loose mortar shall be removed and the exposed joints shall be thoroughly cleaned before laying new work.

3.2.10 Masonry Wall Intersections

Each course shall be masonry bonded at corners and elsewhere as shown. Masonry walls shall be anchored or tied together at corners and intersections with bond beam reinforcement and prefabricated corner or tee pieces of joint reinforcement as shown.

3.2.11 Partitions

Partitions shall be continuous from floor to underside of floor or roof deck where shown. Openings in walls around joists or other structural members shall be filled as indicated or approved. An isolation joint shall be place in the intersection between partitions and structural or exterior walls as shown. Cells within vertical plane of ties shall be filled solid with grout for full height of partition or solid masonry units may be used. Interior partitions having masonry walls over 4 inches thick shall be tied together with joint reinforcement. Partitions containing joint reinforcement shall be provided with prefabricated pieces at corners and intersections or partitions.

3.3 MORTAR

Mortar shall be mixed in a mechanically operated mortar mixer for at least 3 minutes, but not more than 5 minutes. Measurement of ingredients for mortar shall be by volume. Ingredients not in containers, such as sand, shall be accurately measured by the use of measuring boxes. Water shall be mixed with the dry ingredients in sufficient amount to provide a workable mixture which will adhere to the vertical surfaces of masonry units. Mortar that has stiffened because of loss of water through evaporation shall be retempered by adding water to restore the proper consistency and workability. Mortar that has reached its initial set or that has not been used within 2 1/2 hours after mixing shall be discarded.

3.4 REINFORCING STEEL

Reinforcement shall be cleaned of loose, flaky rust, scale, grease, mortar, grout, or other coating which might destroy or reduce its bond prior to placing grout. Bars with kinks or bends not shown on the drawings shall not be used. Reinforcement shall be placed prior to grouting. Unless otherwise indicated, vertical wall reinforcement shall extend to within two inches of tops of walls.

3.4.1 Positioning Bars

Vertical bars shall be accurately placed within the cells at the positions indicated on the drawings. A minimum clearance of 1/2-inch shall be maintained between the bars and masonry units. Minimum clearance between parallel bars shall be one diameter of the reinforcement. Vertical reinforcing may be held in place using bar positioners located near the ends of each bar and at intermediate intervals of not more than 192 diameters of the reinforcement.

3.4.2 Splices

Bars shall be lapped a minimum of 48 diameters of the reinforcement. Welded or mechanical connections shall develop at least 125 percent of the specified yield strength of the reinforcement.

3.5 JOINT REINFORCEMENT

Joint reinforcement shall be installed at 16 inches on center or as indicated. Reinforcement shall be lapped not less than 6 inches. Prefabricated sections shall be installed at corners and wall intersections. The longitudinal wires of joint reinforcement shall be placed to provide not less than 5/8-inch cover to either face of the unit.

3.6 PLACING GROUT

Cells containing reinforcing bars shall be filled with grout. Hollow masonry units in walls or partitions supporting plumbing, heating, or other mechanical fixtures, voids at door and window jambs, and other indicated spaces shall be filled solid with grout. Cells under lintel bearings on each side of openings shall be filled solid with grout for full height of openings. Walls below grade, lintels, and bond beams shall be filled solid with grout. Units other than open end units may require grouting each course to preclude voids in the units. Grout not in place within 1-1/2 hours after water is first added to the batch shall be discarded. Sufficient time shall be allowed between grout lifts to preclude displacement or cracking of face shells of masonry units. If blowouts, flowouts, misalignment, or cracking of face shells should occur during construction, the wall shall be torn down and rebuilt.

3.6.1 Horizontal Grout Barriers

Grout barriers shall be embedded in mortar below cells of hollow units receiving grout.

3.6.2 Grout Holes and Cleanouts

3.6.2.1 Cleanouts for Hollow Unit Masonry Construction

Cleanout holes shall be provided at the bottom of every pour in cores containing vertical reinforcement when the height of the grout pour exceeds 5 feet. A new series of cleanouts shall be established if grouting operations are stopped for more than 4 hours. Cleanouts shall not be less than 3- by 4-inch openings cut from one face shell. Manufacturer's standard cutout units may be used at the Contractor's option. Cleanout holes shall not be closed until masonry work, reinforcement, and final cleaning of the grout spaces have been completed and inspected. For walls which will be exposed to view, cleanout holes shall be closed in an approved manner to match surrounding masonry.

3.6.3 Grouting Equipment

3.6.3.1 Grout Pumps

Pumping through aluminum tubes will not be permitted. Pumps shall be operated to produce a continuous stream of grout without air pockets, segregation, or contamination. Upon completion of each day's pumping, waste materials and debris shall be removed from the equipment, and disposed of outside the masonry.

3.6.3.2 Vibrators

Internal vibrators shall maintain a speed of not less than 5,000 impulses per minute when submerged in the grout. At least one spare vibrator shall be maintained at the site at all times. Vibrators shall be applied at uniformly spaced points not further apart than the visible effectiveness of the machine. Duration of vibration shall be limited to time necessary to produce satisfactory consolidation without causing segregation.

3.6.4 Grout Placement

Masonry shall be laid to the top of a pour before placing grout. Grout shall not be placed in two-wythe solid unit masonry cavity until mortar joints have set for at least 3 days during hot weather and 5 days during cold damp weather. Grout shall not be placed in hollow unit masonry until mortar joints have set for at least 24 hours. Grout shall be placed using a hand bucket, concrete hopper, or grout pump to completely fill the grout spaces without segregation of the aggregates. Vibrators shall not be inserted into lower pours that are in a semi-solidified state. The height of grout pours and type of grout used shall be limited by the dimensions of grout spaces as indicated in Table II. Low-lift grout methods may be used on pours up to and including 5 feet in height. High-lift grout methods shall be used on pours exceeding 5 feet in height.

3.6.4.1 Low-Lift Method

Grout shall be placed at a rate that will not cause displacement of the masonry due to hydrostatic pressure of the grout. Mortar protruding more than 1/2-inch into the grout space shall be removed before beginning the grouting operation. Grout pours 12 inches or less in height shall be consolidated by mechanical vibration or by puddling. Grout pours over 12 inches in height shall be consolidated by mechanical vibration and reconsolidated by mechanical vibration after initial water loss and settlement has occurred. Vibrators shall not be inserted into lower pours that are in a semi-solidified state. Low-lift grout shall be used subject to the limitations of Table II.

TABLE II

POUR HEIGHT AND TYPE OF GROUT FOR VARIOUS GROUT SPACE DIMENSIONS

Maximum Grout Pour Height (feet) (3)	Grout Type	Grouting Procedure	Minimum Dimensions of the Total Clear Areas Within Grout Spaces and Cells (in.) (1,2) Hollow-unit Masonry
1	Coarse	Low Lift	1 1/2 x 3
5	Coarse	Low Lift	2 1/2 x 3

Notes:

(1) The actual grout space or cell dimension must be larger than the sum of the following items:

a) The required minimum dimensions of total clear areas given in the table above;

b) The width of any mortar projections within the space;

c) The horizontal projections of the diameters of the horizontal reinforcing bars within a cross section of the grout space or cell.

(2) The minimum dimensions of the total clear areas shall be made up of one or more open areas, with at least one area being 3/4 inch or greater in width.

(3) Where only cells of hollow masonry units containing reinforcement are grouted, the maximum height of the pour shall not exceed the distance between horizontal bond beams.

3.7 BOND BEAMS

Bond beams shall consist of concrete masonry knock out bond beam units. Bond beams shall be filled with grout and reinforced as indicated on the drawings. Grout barriers shall be installed under bond beam units to retain the grout as required. Reinforcement shall be continuous, including around corners, except through control joints or expansion joints, unless otherwise indicated on the drawings. Where splices are required for continuity, reinforcement shall be lapped 48 bar diameters. A minimum clearance of 1/2 inch shall be maintained between reinforcement and interior faces of units.

3.8 LINTELS

3.8.1 Masonry Lintels

Masonry lintels shall be constructed with lintel units filled solid with grout in all courses and reinforced with a minimum of two No. 4 bars in the bottom course unless otherwise indicated on the drawings. Lintel reinforcement shall extend beyond each side of masonry opening 40 bar diameters or 24 inches, whichever is greater. Reinforcing bars shall be

supported in place prior to grouting and shall be located 1 1/2-inch above the bottom inside surface of the lintel unit.

3.9 POINTING AND CLEANING

After mortar joints have attained their initial set, but prior to hardening, mortar and grout daubs or splashings shall be completely removed from masonry-unit surfaces that will be exposed or painted. Before completion of the work, all defects in joints of masonry to be exposed or painted shall be raked out as necessary, filled with mortar, and tooled to match existing joints. Immediately after grout work is completed, scum and stains which have percolated through the masonry work shall be removed using a high pressure stream of water and a stiff bristled brush. Masonry surfaces shall not be cleaned, other than removing excess surface mortar, until mortar in joints has hardened. Masonry surfaces shall be left clean, free of mortar daubs, dirt, stain, and discoloration, including scum from cleaning operations, and with tight mortar joints throughout. Metal tools and metal brushes shall not be used for cleaning.

3.9.1 Concrete Masonry Unit

Exposed concrete masonry unit surfaces shall be dry-brushed at the end of each day's work and after any required pointing, using stiff-fiber bristled brushes.

3.10 TEST REPORTS

3.10.1 Field Testing of Mortar

At least three specimens of mortar shall be taken each day. A layer of mortar 1/2 to 5/8 inch thick shall be spread on the masonry units and allowed to stand for one minute. The specimens shall then be prepared and tested for compressive strength in accordance with ASTM C 780.

3.10.2 Field Testing of Grout

Field sampling and testing of grout shall be in accordance with the applicable provisions of ASTM C 1019. A minimum of three specimens of grout per day shall be sampled and tested. Each specimen shall have a minimum ultimate compressive strength of 13.8 MPa (2000 psi) at 28 days.

-- o O o --

SECTION 05055

WELDING, STRUCTURAL

PART 1 GENERAL

1.1 REFERENCES

The publications listed below form a part of this specification to the extent referenced. The publications are referred to in the text by basic designation only.

AMERICAN INSTITUTE OF STEEL CONSTRUCTION (AISC)

AISC S335	(1989) Specification of Structural Steel Buildings - Allowable Stress Design, and Plastic Design

AMERICAN NATIONAL STANDARDS INSTITUTE (ANSI)

ANSI Z49.1	(1988) Safety in Welding and Cutting

AMERICAN SOCIETY FOR NONDESTRUCTIVE TESTING (ASNT)

ASNT-01	(1988) Recommended Practice SNT-TC-1A

AMERICAN WELDING SOCIETY (AWS)

AWS A2.4	(1986) Symbols for Welding, Brazing and Nondestructive Testing
AWS A3.0	(1989) Welding Terms and Definitions
AWS D1.1	(1992) Structural Welding Code - Steel

1.2 DEFINITIONS

Definitions of welding terms shall be in accordance with AWS A3.0.

1.3 GENERAL REQUIREMENTS

The design of welded connections shall conform to AISC S335 unless otherwise indicated or specified. Material with welds will not be accepted unless the welding is specified or indicated on the drawings or otherwise approved. Welding shall be as specified in this section, except where additional requirements are shown on the drawings or are specified in other sections. Welding shall not be started until welding procedures, welders, welding operators, and tackers have been qualified and the submittals furnished to the Contracting Officer. Qualification testing shall be performed at or near the work site. Each Contractor performing welding shall maintain records of the test results obtained in welding procedure, welder, welding operator, and tacker performance qualifications.

1.4 SUBMITTALS

The following shall be submitted in accordance with Section 01300 SUBMITTAL DESCRIPTIONS:

SD-08 Statements

Welding Procedure Qualifications.

Welder, Welding Operator, and Tacker Qualification.

Inspector Qualification.

Copies of the welding procedure specifications; the procedure qualification test records; and the welder, welding operator, or tacker qualification test records.

SD-18 Records

Quality Control.

A quality assurance plan and records of tests and inspections.

1.5 WELDING PROCEDURE QUALIFICATIONS

Except for prequalified (per AWS D1.1) and previously qualified procedures, each Contractor performing welding shall record in detail and shall qualify the welding procedure specification for any welding procedure followed in the fabrication of weldments. Qualification of welding procedures shall conform to AWS D1.1 and to the specifications in this section. Copies of the welding procedure specification and the results of the procedure qualification test for each type of welding which requires procedure qualification shall be submitted. Approval of any procedure, however, will not relieve the Contractor of the sole responsibility for producing a finished structure meeting all the requirements of these specifications. This information shall be submitted on the forms in Appendix E of AWS D1.1. Welding procedure specifications shall be individually identified and shall be referenced on the detail drawings and erection drawings, or shall be suitably keyed to the contract drawings. In case of conflict between this specification and AWS D1.1, this specification governs.

1.5.1 Previous Qualifications

Welding procedures previously qualified by test may be accepted for this contract without requalification if the following conditions are met:

a. Testing was performed by an approved testing laboratory, technical consultant, or the Contractor's approved quality control organization.

b. The qualified welding procedure conforms to the requirements of this specification and is applicable to welding conditions encountered under this contract.

c. The welder, welding operator, and tacker qualification tests conform to the requirements of this specification and are applicable to welding conditions encountered under this contract.

1.5.2 Prequalified Procedures

Welding procedures which are considered prequalified as specified in AWS D1.1 will be accepted without further qualification. The Contractor shall submit a listing or an annotated drawing to indicate the joints not prequalified. Procedure qualification shall be required for these joints.

1.5.3 Retests

If welding procedure fails to meet the requirements of AWS D1.1, the procedure specification shall be revised and requalified, or at the Contractor's option, welding procedure may be retested in accordance with AWS D1.1. If the welding procedure is qualified through retesting, all test results, including those of test welds that failed to meet the requirements, shall be submitted with the welding procedure.

1.6 WELDER, WELDING OPERATOR, AND TACKER QUALIFICATION

Each welder, welding operator, and tacker assigned to work on this contract shall be qualified in accordance with the applicable requirements of AWS D1.1 and as specified in this section. Welders,

welding operators, and tackers who make acceptable procedure qualification test welds will be considered qualified for the welding procedure used.

1.6.1 Previous Qualifications

At the discretion of the Contracting Officer, welders, welding operators, and tackers qualified by test within the previous 6 months may be accepted for this contract without requalification if all the following conditions are met:

a. Copies of the welding procedure specifications, the procedure qualification test records, and the welder, welding operator, and tacker qualification test records are submitted in accordance with the specified requirements for detail drawings.

b. Testing was performed by an approved testing laboratory, technical consultant, or the Contractor's approved quality control organization.

c. The previously qualified welding procedure conforms to the requirements of this specification and is applicable to welding conditions encountered under this contract.

d. The welder, welding operator, and tacker qualification tests conform to the requirements of this specification and are applicable to welding conditions encountered under this contract.

1.6.2 Certificates

Before assigning any welder, welding operator, or tacker to work under this contract, the Contractor shall submit the names of the welders, welding operators, and tackers to be employed, and certification that each individual is qualified as specified. The certification shall state the type of welding and positions for which the welder, welding operator, or tacker is qualified, the code and procedure under which the individual is qualified, the date qualified, and the name of the firm and person certifying the qualification tests. The certification shall be kept on file, and 3 copies shall be furnished. The certification shall be kept current for the duration of the contract.

1.6.3 Renewal of Qualification

Requalification of a welder or welding operator shall be required under any of the following conditions:

a. It has been more than 6 months since the welder or welding operator has used the specific welding process for which he is qualified.

b. There is specific reason to question the welder or welding operator's ability to make welds that meet the requirements of these specifications.

c. The welder or welding operator was qualified by an employer other than those firms performing work under this contract, and a qualification test has not been taken within the past 12 months. Records showing periods of employment, name of employer where welder, or welding operator, was last employed, and the process for which qualified shall be submitted as evidence of conformance.

d. A tacker who passes the qualification test shall be considered eligible to perform tack welding indefinitely in the positions and with the processes for which he is qualified, unless there is some specific reason to question the tacker's ability. In such a case, the tacker shall be required to pass the prescribed tack welding test.

1.7 INSPECTOR QUALIFICATION

Inspection and nondestructive testing personnel shall be qualified in accordance with the requirements of ASNT-01 for Levels I or II in the applicable nondestructive testing method. The inspector may be supported by assistant welding inspectors who are not qualified to ASNT-01, and assistant inspectors may perform specific inspection functions under the supervision of the qualified inspector.

1.8 SYMBOLS

Symbols shall be in accordance with AWS A2.4, unless otherwise indicated.

1.9 SAFETY

Safety precautions during welding shall conform to ANSI Z49.1.

PART 2 PRODUCTS

2.1 WELDING EQUIPMENT AND MATERIALS

All welding equipment, electrodes, welding wire, and fluxes shall be capable of producing satisfactory welds when used by a qualified welder or welding operator performing qualified welding procedures. All welding equipment and materials shall comply with the applicable requirements of AWS D1.1.

PART 3 EXECUTION

3.1 WELDING OPERATIONS

3.1.1 Requirements

Workmanship and techniques for welded construction shall conform to the requirements of AWS D1.1 and AISC S335. When AWS D1.1 and the AISC S335 specification conflict, the requirements of AWS D1.1 shall govern.

3.1.2 Identification

Welds shall be identified in one of the following ways:

a. Written records shall be submitted to indicate the location of welds made by each welder, welding operator, or tacker.

b. Each welder, welding operator, or tacker shall be assigned a number, letter, or symbol to identify welds made by that individual. The Contracting Officer may require welders, welding operators, and tackers to apply their symbol next to the weld by means of rubber stamp, felt-tipped marker with waterproof ink, or other methods that do not cause an indentation in the metal. For seam welds, the identification mark shall be adjacent to the weld at 3-foot intervals. Identification with die stamps or electric etchers shall not be allowed.

3.2 QUALITY CONTROL

Visual inspection and testing shall be performed by an approved inspection or testing laboratory or technical consultant. All field welds shall be visually inspected. All welds which are not acceptable from visual inspection and all full penetration field welds shall be inspected by radiographic or untrasonic metholds to determine conformance with paragraph "STANDARDS OF ACCEPTANCE". Procedures and techniques for inspection shall be in accordance with applicable requirements of AWS D1.1, except that in radiographic inspection only film types described as "fine grain" or "extra fine" shall be employed. Metal deck welding inspection shall be performed by visual inspection only.

3.3 STANDARDS OF ACCEPTANCE

Dimensional tolerances for welded construction, details of welds, and quality of welds shall be in accordance with the applicable requirements of AWS D1.1 and the contract drawings. Nondestructive testing shall be by visual inspection, radiographic or ultrasonic methods. The minimum extent of nondestructive testing shall be 100 percent of welds or joints.

3.3.1 Nondestructive Examination

The welding shall be subject to inspection and tests in the mill, shop, and field. Inspection and tests in the mill or shop will not relieve the Contractor of the responsibility to furnish weldments of satisfactory quality. When materials or workmanship do not conform to the specification requirements, the Government reserves the right to reject material or workmanship or both at any time before final acceptance of the structure containing the weldment.

3.3.2 Destructive Tests

When metallographic specimens are removed from any part of a structure, the Contractor shall make repairs. The Contractor shall employ qualified welders or welding operators, and shall use the proper joints and welding procedures, including peening or heat treatment if required, to develop the full strength of the members and joints cut and to relieve residual stress.

3.4 GOVERNMENT INSPECTION AND TESTING

In addition to the inspection and tests performed by the Contractor for quality control, the Government will perform inspection and testing for acceptance to the extent determined by the Contracting Officer. The costs of such inspection and testing will be borne by the Contractor if unsatisfactory welds are discovered, or by the Government if the welds are satisfactory. The work may be performed by the Government's own forces or under a separate contract for inspection and testing. The Government reserves the right to perform supplemental nondestructive and destructive tests to determine compliance with paragraph STANDARDS OF ACCEPTANCE.

3.5 CORRECTIONS AND REPAIRS

When inspection or testing indicates defects in the weld joints, the welds shall be repaired using a qualified welder or welding operator as applicable. Corrections shall be in accordance with the requirements of AWS D1.1 and the specifications. Defects shall be repaired in accordance with the approved procedures. Defects discovered between passes shall be repaired before additional weld material is deposited. Wherever a defect is removed and repair by welding is not required, the affected area shall be blended into the surrounding surface to eliminate sharp notches, crevices, or corners. After a defect is thought to have been removed, and before rewelding, the area shall be examined by suitable methods to insure that the defect has been eliminated. Repair welds shall meet the inspection requirements for the original welds. Any indication of a defect shall be regarded as a defect, unless reevaluation by nondestructive methods or by surface conditioning shows that no unacceptable defect is present.

- - o 0 o - -

SECTION 05500

MISCELLANEOUS METAL

PART 1 GENERAL

1.1 REFERENCES

The publications listed below form a part of this specification to the extent referenced. The publications are referred to in the text by basic designation only.

ALUMINUM ASSOCIATION (AA)

AA DAF-45	(1980) Designation System for Aluminum Finishes
AA SAA-46	(1978) Standards for Architectural Aluminum

AMERICAN NATIONAL STANDARDS INSTITUTE (ANSI)

ANSI A14.3	(1992) Ladders - Fixed - Safety Requirements

AMERICAN SOCIETY FOR TESTING AND MATERIALS (ASTM)

ASTM A 36	(1993a) Structural Steel
ASTM A 53	(1993) Pipe, Steel, Black and Hot-Dipped, Zinc-Coated Welded and Seamless
ASTM A 123	(1989a) Zinc (Hot-Dip Galvanized) Coatings on Iron and Steel Products
ASTM A 446	(1993) Steel Sheet, Zinc-Coated (Galvanized) by the Hot-Dip Process, Structural (Physical) Quality
ASTM A 525	(1993) General Requirements for Steel Sheet, Zinc-Coated (Galvanized) by the Hot-Dip Process
ASTM B 26	(1992a) Aluminum-Alloy Sand Castings
ASTM B 429	(1992a) Aluminum-Alloy Extruded Structural Pipe and Tube
ASTM D 2047	(1982; R 1988) Static Coefficient of Friction of Polish-Coated Floor Surfaces as Measured by the James Machine

AMERICAN WELDING SOCIETY (AWS)

AWS D1.1	(1994) Structural Welding Code - Steel

FEDERAL SPECIFICATIONS (FS)

FS FF-S-325	(1965) Shield, Expansion; Nail Expansion; and Nail Drive Screw.
FS RR-C-271	(Rev D) Chains and Attachments, Welded and Weld-less
FS RR-G-1602	(Rev C) Grating, Metal, Other Than Bar Type (Floor, Except for Naval Vessels)

NATIONAL ASSOCIATION OF ARCHITECTURAL METAL MANUFACTURERS (NAAMM)

NAAMM-01	(1988) Metal Finishes Manual for Architectural and Metal Products

1.2 SUBMITTALS

The following shall be submitted in accordance with Section 01300 SUBMITTAL DESCRIPTIONS:

SD-04 Drawings

Miscellaneous Metal Items.

Detail drawings indicating material thickness, type, grade, and class; dimensions; and construction details. Drawings shall include catalog cuts, erection details, manufacturer's descriptive data and installation instructions, and templates. Detail drawings for the following items:

a. Access doors and frames.

b. Aluminum fabrication.

c. Floor gratings and frames.

d. Floor plates.

e. Guardrails and handrails.

f. Ladders.

g. Pipe guards.

h. Miscellaneous plates and shapes.

i. Safety chains.

j. Safety nosings.

k. Aluminum stairs.

l. Cast iron covers and frame.

m. Expansion anchors.

n. Adhesive anchors.

o. Anchor bolts.

1.3 GENERAL REQUIREMENTS

The Contractor shall verify all measurements and shall take all field measurements necessary before fabrication. Welding to or on structural steel shall be in accordance with AWS D1.1. Items specified to be galvanized, when practicable and not indicated otherwise, shall be hot-dip galvanized after fabrication. Galvanizing shall be in accordance with ASTM A 123, ASTM A 446, or ASTM A 525, as applicable. Exposed fastenings shall be compatible materials, shall generally match in color and finish, and shall harmonize with the material to which fastenings are applied. Materials and parts necessary to complete each item, even though such work is not definitely shown or specified, shall be included. Poor matching of holes for fasteners shall be cause for rejection. Fastenings shall be concealed where practicable. Thickness of metal and details of assembly and supports shall provide strength and stiffness. Joints exposed to the weather shall be formed to exclude water.

1.4 DISSIMILAR MATERIALS

Where dissimilar metals are in contact, or where aluminum is in contact with concrete, mortar, masonry, wet or pressure-treated wood, or absorptive materials subject to wetting, the surfaces shall be protected with a coat of bituminous paint or asphalt varnish.

1.5 WORKMANSHIP

1.5 WORKMANSHIP

Miscellaneous metalwork shall be well formed to shape and size, with sharp lines and angles and true curves. Drilling and punching shall produce clean true lines and surfaces. Welding shall be continuous along the entire area of contact except where tack welding is permitted. Exposed connections of work in place shall not be tack welded. Exposed welds shall be ground smooth. Exposed surfaces of work in place shall have a smooth finish, and unless otherwise approved, exposed riveting shall be flush. Where tight fits are required, joints shall be milled. Corner joints shall be coped or mitered, well formed, and in true alignment. Work shall be accurately set to established lines and elevations and securely fastened in place. Installation shall be in accordance with manufacturer's installation instructions and approved drawings, cuts, and details.

1.6 ANCHORAGE

Anchorage shall be provided where necessary for fastening miscellaneous metal items securely in place. Anchorage not otherwise specified or indicated shall include slotted inserts made to engage with the anchors, expansion shields, and power-driven fasteners when approved for concrete; toggle bolts and through bolts for masonry; machine and carriage bolts for steel; and lag bolts and screws for wood.

PART 2 PRODUCTS

2.1 ALUMINUM FINISHES

Unless otherwise specified, aluminum items shall have anodized finish conforming to AA SAA-46. The thickness of the coating shall be not less than that specified for protective and decorative type finishes for items used in interior locations or architectural Class I type finish for items used in exterior locations in AA DAF-45. Items to be anodized shall receive a polished satin finish pretreatment and a clear lacquer overcoating.

2.2 SHOP PAINTING

Surfaces of ferrous metal except galvanized surfaces, shall be cleaned and shop coated with the manufacturer's standard protective coating unless otherwise specified. Surfaces of items to be embedded in concrete shall not be painted. Items to be finish painted shall be prepared according to manufacturer's recommendations or as specified.

2.3 ACCESS DOORS AND FRAMES

Access doors and panels shall be flush type unless otherwise indicated. Frames for access doors shall be fabricated of not lighter than 1.519 mm (16 gauge) steel with welded joints and finished with anchorage for securing into construction. Access doors shall be a minimum of 350 by 500 mm (14 by 20 inches) and of not lighter than 1.897 mm (14 gauge) steel, with stiffened edges, complete with attachments. Access doors shall be hinged to frame and provided with a flush face, screw driver operated latch. Exposed metal surfaces shall have a shop applied prime coat.

2.4 PIPE GUARDS

Pipe guards shall be heavy duty steel pipe conforming to ASTM A 53, Type E or S, weight STD, black finish.

2.5 ALUMINUM FABRICATION

Conform to following standards of AA:

a. "Specifications for Aluminum Structures."

b. "Engineering Data for Aluminum Structures."

c. "Aluminum Standards and Data."

Aluminum shapes and plates shall be alloy 6061-T6. Welding shall conform to AWS D1.2 and AA "Specifications for Aluminum Structures."

2.5.1 Connection Details

Connections not detailed on Drawings shall be designed by fabricator. Where loads or reactions are not shown, provide minimum two 5/8" diameter bolts at each connection face. Shop welding of connection clip angles to members shall be adequate for minimum of 2,000 lb shear.

2.5.2 Shop Connections

Either weld or bolt, unless type is specifically shown.

2.5.3 Field Connections

Provide bolts for field connections. Bolts shall be anodized alloy 2024-T4, washer shall be Alclad 2024-T4, and nuts shall be 6061-T6 or 6262-T9. Provide stainless steel 300 series bolts, nuts, and washers where shown on Drawings.

2.5.4 Protection of Dissimilar Materials

Aluminum surfaces in contact with steel shall be given one coat of zinc chromate primer in accordance with FS TT-P-645. Aluminum surfaces in contact with concrete dissimilar metals shall be given heavy coat of alkali-resistant bituminous paint or asphalt varnish.

2.6 FLOOR GRATINGS AND FRAMES

Aluminum grating shall be designed in accordance with NAAMM-01 for bar type floor gratings and FS RR-G-1602 for floor gratings other than bar types to meet the indicated load requirements. Edges shall be banded with bars 6 mm (1/4 inch) less in height than bearing bars for grating sizes above 19 mm (3/4 inch). Banding bars shall be flush with the top of bearing grating. Frames shall be of welded steel construction finished to match the grating. Floor gratings and frames shall be galvanized after fabrication. Fasten grating to supporting members with aluminum studs and aluminum saddle clip fasteners engaging two main bearing bars. Finish on aluminum grating shall be manufacturer's standard mill finish.

2.7 HANDRAILS

Handrails shall be designed to resist a concentrated load of 890 N (200 pounds) in any direction at any point of the top of the rail or 292 Newtons per meter (20 pounds per foot) applied horizontally to top of the rail, whichever is more severe.

2.7.1 Aluminum Handrails

Handrails shall consist of 40 mm (1-1/2 inch) nominal Schedule 40 pipe ASTM B 429. Railings shall be anodized aluminum color. All fasteners shall be Series 300 stainless steel.

a. Fabrication: Jointing shall be by one of the following methods:

1. Flush type rail fittings, welded and ground smooth with splice locks secured with 9.5 mm (3/8 inch) recessed head setscrews.

2. Mitered and welded joints, made by fitting post to top rail and intermediate rail to post and corners, shall be groove welded and ground smooth. Splices, where allowed by the Contracting Officer, shall be butted and reinforced by a tight fitting dowel or sleeve not less than 150 mm (6 inches) in length. Dowel or sleeve shall be connected to one side of the splice by tack welding or by using epoxy cement.

3. Railings shall be assembled using slip-on aluminum-magnesium alloy fittings for joints. Fittings shall be fastened to pipe or tube with 6 mm (1/4 inch) or 10 mm (3/8 inch) stainless steel recessed head setscrews. Assembled railings shall be provided with fittings only at vertical supports or at rail terminations attached to walls. Expansion joints shall be at the midpoint of panels. A setscrew shall be provided in only one side of the slip-on sleeve. Alloy fittings shall conform to ASTM B 26.

b. Removable sections, toe-boards and brackets shall be provided where indicated, using flange castings as appropriate.

2.8 LADDERS

Ladders shall be galvanized steel or aluminum, fixed rail type in accordance with ANSI A14.3.

2.9 MISCELLANEOUS

Miscellaneous plates and shapes for items that do not form a part of the structural steel framework, such as lintels, sill angles, miscellaneous mountings, and frames, shall be provided to complete the work.

2.10 SAFETY CHAINS

Safety chains shall be galvanized welded steel, proof coil chain in accordance with FS RR-C-271, Type I, Class 4. Safety chains shall be straight link style, 5 mm (3/16 inch) diameter, minimum 39 links per meter (12 links per foot) and with bolt type snap hooks on each end. Eye bolts for attachment of chains shall be galvanized 10 mm (3/8 inch) bolt with 19 mm (3/4 inch) eye, anchored as indicated. Two chains shall be furnished for each guarded opening.

2.11 SAFETY NOSING

Safety nosings shall be of cast aluminum with cross-hatched , abrasive surface. Nosing shall be 75 mm (3 inches) wide and terminating at not more than 150 mm (6 inches) from the ends of treads. Safety nosings shall be provided with anchors not less than 19 mm (3/4 inch) long. Integrally cast mushroom anchors are not acceptable.

2.12 SHELVING

Shelving shall conform to FS AA-S-271, Kind 1, Class 3. Minimum dimensions and number of shelves shall be as indicated.

2.13 ALUMINUM STAIRS

Aluminum stairs shall be complete with structural or formed channel stringers, aluminum grating treads, slip-resistant aluminum treads, landings, columns, handrails, and necessary bolts and other fastenings as indicated. Aluminum shapes shall be alloy 6061-T6. Stairs and accessories shall be aluminum. Gratings for treads and landings shall conform to NAAMM-01. Grating treads shall have slip-resistant nosings.

2.14 CAST IRON COVERS AND FRAMES

Cast iron covers and frames shall be cast iron construction. Frames and covers shall be classified light duty, adequate for live load of 150 psf. Cover shall have concealed pickhole, and countersunk stainless steel hexagonal head cap screws to fasten cover to frame.

2.15 EXPANSION ANCHORS

Expansion anchors shall be stud type with a single piece three section wedge and zinc plated in accordance with ASTM B 633. The anchors shall meet the description in Federal Specification FF-S-325, Group II, Type 4, Class I for concrete expansion anchors.

2.16 ADHESIVE ANCHORS

Adhesive anchors shall be used in brick and concrete masonry units. Adhesive anchors shall be as manufactured by one of the following:

a. HIT C-20 System by Hilti, Corp., Tulsa, OK.

b. Foil-Fast with screen Epoxy System by Rawlplug Company Inc., New Rochelle, NY.

c. EPCON Epoxy System by ITW Ramset/Readhead, Wood Dale, IL.

2.17 ANCHOR BOLTS

Provide anchor bolt assemblies for structural and miscellaneous steel, and equipment shown on drawings. Provide washers and heavy hexagon heads and nuts on all anchor bolts unless specified otherwise. Do not prime paint surfaces which are to be embedded in concrete.

Installation of anchor bolts under Division 3. Provide double nuts for anchor bolts used for installation of machines and other equipment subject to vibration.

PART 3 EXECUTION

3.1 GENERAL REQUIREMENTS

All items shall be installed at the locations shown and according to the manufacturer's recommendations. Items listed below require additional procedures as specified.

3.2 REMOVABLE ACCESS PANELS

A removable access panel not less than 300 by 300 mm (12 by 12 inches) shall be installed directly below each valve, flow indicator, damper, or air splitter that is located above the ceiling, other than an acoustical ceiling, and that would otherwise not be accessible.

3.3 PIPE GUARDS

Pipe guards shall be set vertically in concrete piers. Piers shall be constructed of, and the hollow cores of the pipe filled with, concrete specified in SECTION 03300 CONCRETE FOR BUILDING CONSTRUCTION. having a compressive strength of 21 MPa. (3000 psi.)

3.4 ATTACHMENT OF HANDRAILS

Toeboards and brackets shall be installed where indicated. Splices, where required, shall be made at expansion joints. Removable sections shall be installed as indicated.

3.4.1 Installation of Aluminum Handrails

Installation shall be by means of flanges anchored to concrete or masonry by expansion shields and base plates or flanges bolted to stringers or structural framework. Bolts used to anchor aluminum alloy flanges shall be stainless steel of a size appropriate to the standard product of the manufacturer. Where aluminum or alloy fittings or extrusions are to be in contact with dissimilar metals or portland cement concrete, the contact surface shall be given a heavy coating of bituminous paint or asphalt varnish.

3.5 MOUNTING OF SAFETY CHAINS

Safety chains shall be mounted 1070 mm (3 feet 6 inches) and 610 mm (2 feet) above the floor.

3.6 INSTALLATION OF SAFETY NOSINGS

Nosing shall be completely embedded in concrete before the initial set of the concrete occurs and shall finish flush with the top of the concrete surface.

3.7 CAST IRON COVERS AND FRAMES

Cast iron frames and covers shall finish flush with the floor.

3.8 INSTALLATION OF ADHESIVE ANCHORS

Drill hole into masonry for anchor bolt. Hole size and depth shall be according to manufacturer's recommendation. Install screen in hole and inject adhesive. Push anchor bolt into adhesive. Installation shall conform to manufacturer's recommendations.

-- o O o --

SECTION 06100

ROUGH CARPENTRY

PART 1 GENERAL

1.1 REFERENCES

The publications listed below form a part of this specification to the extent referenced. The publications are referred to in the text by basic designation only.

AMERICAN FOREST AND PAPER ASSOCIATION (AFPA)

AFPA-01	(1991; Supple 1993) National Design Specification for Wood Construction

AMERICAN HARDBOARD ASSOCIATION (AHA)

AHA A135.4	(1982; R 1988) Basic Hardboard
AHA A194.1	(1985) Cellulosic Fiberboard

AMERICAN INSTITUTE OF TIMBER CONSTRUCTION (AITC)

AITC-01	(1994) Timber Construction Manual
AITC 109	(1990) Standard for Preservative Treatment of Structural Glued Laminated Timber
AITC 111	(1979) Recommended Practice for Protection of Structural Glued Laminated Timber During Transit, Storage and Erection
AITC A190.1	(1992) Structural Glued Laminated Timber

AMERICAN SOCIETY FOR TESTING AND MATERIALS (ASTM)

ASTM A 307	(1993a) Carbon Steel Bolts and Studs, 60 000 PSI Tensile Strength

AMERICAN WOOD PRESERVERS' ASSOCIATION (AWPA)

AWPA M4	(1991) Standard for the Care of Preservative-Treated Wood Products
AWPA P5	(1993) Standards for Waterborne Preservatives

CALIFORNIA REDWOOD ASSOCIATION (CRA)

CRA-01	(1992) Standard Specifications for Grades of California Redwood Lumber

FEDERAL SPECIFICATIONS (FS)

FS FF-N-105	(Rev B; Am 3; Int Am 4; Notice 1) Nails, Brads, Staples and Spikes: Wire, Cut and Wrought

NORTHEASTERN LUMBER MANUFACTURERS ASSOCIATION (NELMA)

NELMA-01	(1993) Standard Grading Rules for Northeastern Lumber

SOUTHERN PINE INSPECTION BUREAU (SPIB)

SPIB-01	(1994) Standard Grading Rules for Southern Pine Lumber

WEST COAST LUMBER INSPECTION BUREAU (WCLIB)

WCLIB Std 17 (1993) Grading Rules for West Coast Lumber

WESTERN WOOD PRODUCTS ASSOCIATION (WWPA)

WWPA-01 (1991; Supple No. 3) Western Lumber Grading Rules 91

1.2 SUBMITTALS

The following shall be submitted in accordance with Section 01300 SUBMITTAL DESCRIPTIONS:

SD-13 Certificates

Grading and Marking.

Manufacturer's certificates (audited by an American Lumber Standards approved agency) attesting that lumber and material not normally grade marked or exempt from being grade marked meet the specified requirements. Certificate of Inspection issued for grade marked material by an American Lumber Standards Committee (ALSC) recognized lumber inspection agency prior to shipment.

1.3 DELIVERY AND STORAGE

Materials shall be delivered to the site in undamaged condition, stored off ground in fully covered, well ventilated areas, and protected from extreme changes in temperature and humidity.

PART 2 PRODUCTS

2.1 LUMBER AND SHEATHING

2.1.1 Grading and Marking

2.1.1.1 Lumber Products

Solid sawn and finger-jointed lumber shall bear an authorized gradestamp or grademark recongnized by ALSC, or an ALSC recognized certification stamp, mark, or hammerbrand. Surfaces that are to be exposed to view shall not bear grademarks, stamps, or any type of identifying mark. Hammer marking will be permitted on timbers when all surfaces will be exposed to view.

2.1.2 Sizes

Lumber and material sizes shall conform to requirements of the rules or standards under which produced. Unless otherwise specified, lumber shall be surfaced on four sides. Size references, unless otherwise specified, are nominal sizes, and actual sizes shall be within manufacturing tolerances allowed by the standard under which the product is produced.

2.1.3 Moisture Content

At the time lumber and other materials are delivered and when installed in the work their moisture content shall be as follows:

a. Treated and untreated lumber except screen wall:
100 mm (4 inches) or less, nominal thickness, 19 percent maximum.
125 mm (5 inches) or more, nominal thickness, 23 percent maximum in a 75 mm (3 inch) perimeter of the timber cross-section.

b. Materials other than lumber: In accordance with standard under which product is produced.

2.1.4 Treatment

2.1.4.1 Lumber and Timbers

Lumber and timbers shall be treated in accordance with AWPA C2 with waterborne preservatives listed in AWPA P5 to a retention level as follows:

a. 4 kg per cubic meter (0.25 pcf) intended for above ground use.

b. 6.4 kg per cubic meter (0.40 pcf) intended for ground contact and fresh water use.

2.1.5 Miscellaneous Wood Members

2.1.5.1 Nonstress Graded Members

Members shall include nailing strips. Members shall be in accordance with TABLE I for the species used. Sizes shall be as follows unless otherwise shown:

Member	Size mm (inch)
Nailing strips	25 by 75 (1 by 3) or 25 by 100 (1 by 4) when used as shingle base or interior finish, otherwise 50 mm (2 inch) stock.

2.1.5.2 Blocking

Blocking shall be standard or number 2 grade.

2.2 ACCESSORIES AND NAILS

Markings shall identify both the strength grade and the manufacturer. Accessories and nails shall conform to the following:

2.2.1 Bolts: Lag, Toggle, and Miscellaneous Bolts and Screws

Type, size, and finish best suited for intended use. Finish options include zinc compounds, cadmium, and aluminum paint impregnated finishes.

2.2.2 Clip Angles

Steel, 4.8 mm (3/16 inch) thick, size best suited for intended use; or zinc-coated steel clips designed for connecting wood members.

2.2.3 Expansion Shields

Type and size best suited for intended use.

2.2.4 Nails and Staples

FS FF-N-105, size and type best suited for purpose. For sheathing and subflooring, length of nails shall be sufficient to extend 25 mm (1 inch) into supports. In general, 8-penny or larger nails shall be used for nailing through 25 mm (1 inch) thick lumber and for toe nailing 50 mm (2 inch) thick lumber; 16-penny or larger nails shall be used for nailing through 50 mm (2 inch) thick lumber. Nails shall be galvanized. Nailing shall be in accordance with the recommended nailing schedule contained in AFPA WCD No. 1. Where detailed nailing requirements are not specified, nail size and spacing shall be sufficient to develop an adequate strength for the connection. The connection's strength shall be verified against the nail capacity tables in AFPA-01. Reasonable judgement backed by experience shall ensure that the designed connection will not cause the wood to split. If a load situation exceeds a reasonable limit for nails, a specialized connector shall be used.

2.2.5 Timber Connectors

Unless otherwise specified, timber connectors shall be in accordance with TPI 85 or AITC-01.

PART 3 EXECUTION

3.1 INSTALLATION OF MISCELLANEOUS WOOD MEMBERS

3.1.1 Blocking

Blocking shall be provided as necessary for application of wallboard, and other materials or building items.

3.1.2 Furring Strips

Furring strips shall be provided at the locations shown. Furring strips shall be installed at 400 mm (16 inches) on center unless otherwise shown, run in lengths as long as practicable, butt jointed and rigidly secured in place.

TABLE I. SPECIES AND GRADE

Grading Rules	Species	Const Standard	No. 2 Comm	No. 2 Board Comm	No. 3 Comm
NHLA-01	Cypress			X	
NELMA-01	Northern White Cedar				X
	Eastern White Pine	X			
	Northern Pine	X			
	Balsam Fir				X
	Eastern Hemlock-Tamarack				X
CRA-01	Redwood		X		
SPIB-01	Southern Pine		X		
WCLIB Std 17	Douglas Fir-Larch	X			
	Hem-Fir	X			
	Sitka Spruce	X			
	Mountain Hemlock	X			
	Western Cedar	X			
WWPA-01	Douglas Fir-Larch	X			
	Hem-Fir	X			
	Idaho White Pine	X			
	Lodgepole Pine			X	
	Ponderosa Pine			X	
	Sugar Pine			X	
	Englemann Spruce			X	
	Douglas Fir South			X	
	Mountain Hemlock			X	
	Subalpine Fir			X	
	Western Cedar			X	

-- o O o --

SECTION 07920

JOINT SEALING

PART 1 GENERAL

1.1 REFERENCES

The publications listed below form a part of this specification to the extent referenced. The publications are referred to in the text by basic designation only.

AMERICAN SOCIETY FOR TESTING AND MATERIALS (ASTM)

ASTM C 509	(1991) Elastomeric Cellular Preformed Gasket and Sealing Material
ASTM C 734	(1993) Low-Temperature Flexibility of Latex Sealants After Artificial Weathering
ASTM C 834	(1991) Latex Sealants
ASTM C 920	(1987) Elastomeric Joint Sealants
ASTM C 1184	(1991) Structural Silicone-Sealants
ASTM E 84	(1991a) Surface Burning Characteristics of Building Materials

1.2 SUBMITTALS

The following shall be submitted in accordance with Section 01300 SUBMITTAL DESCRIPTIONS:

SD-01 Data

Backing.

Bond-Breaker.

Sealant.

Manufacturer's descriptive data including storage requirements, shelf life, curing time, instructions for mixing and application, and primer data (if required). A copy of the Material Safety Data Sheet shall be provided for each solvent, primer or sealant material.

SD-13 Certificates

Sealant.

Certificates of compliance stating that the materials conform to the specified requirements.

1.3 ENVIRONMENTAL REQUIREMENTS

The ambient temperature shall be within the limits of 4 to 32 degrees C (40 to 90 degrees F) when the sealants are applied.

1.4 DELIVERY AND STORAGE

Materials shall be delivered to the job in the manufacturer's original unopened containers. The container label or accompanying data sheet shall include the following information as applicable: manufacturer, name of material, formula or specification number, lot number, color, date of manufacture, mixing instructions, shelf life, and curing time at the standard conditions for laboratory tests. Materials shall be handled and stored to prevent inclusion of foreign materials. Materials shall be

stored at temperatures between 4 and 32 degrees C (40 and 90 degrees F) unless otherwise specified by the manufacturer.

PART 2 PRODUCTS

2.1 BACKING

Backing shall be 25 to 33 percent oversize for closed cell and 40 to 50 percent oversize for open cell material, unless otherwise indicated.

2.1.1 Synthetic Rubber Backing

Synthetic rubber backing C shall be ASTM C 509, Option I, Type I preformed rods or tubes.

2.2 BOND-BREAKER

Bond-breaker shall be as recommended by the sealant manufacturer to prevent adhesion of the sealant to backing or to bottom of the joint.

2.3 PRIMER

Primer shall be non-staining type as recommended by sealant manufacturer for the application.

2.4 LATEX SEALANT

Latex Sealant, A shall be ASTM C 834.

2.5 ELASTOMERIC SEALANTS

Elastomeric sealants shall conform to ASTM C 920 and the following:

a. Polysulfide Sealant B: Polysulfide sealant, Type S, Grade NS, Class 12.5, use NT, G, A.

b. Structural Silicone Sealant E: Structural silicone sealant, ASTM C 1184, Type S, use G.

2.6 SOLVENTS AND CLEANING AGENTS

Solvents, cleaning agents, and accessory materials shall be provided as recommended by the manufacturer.

PART 3 EXECUTION

3.1 GENERAL

3.1.1 Surface Preparation

The surfaces of joints to be sealed shall be dry. Oil, grease, dirt, chalk, particles of mortar, dust, loose rust, loose mill scale, and other foreign substances shall be removed from surfaces of joints to be in contact with the sealant. Oil and grease shall be removed with solvent and surfaces shall be wiped dry with clean cloths.

3.1.2 Steel Surfaces

Steel surfaces to be in contact with sealant shall be sandblasted or, if sandblasting would not be practical or would damage adjacent finish work, the metal shall be scraped and wire brushed to remove loose mill scale. Protective coatings on steel surfaces shall be removed by sandblasting or by a solvent that leaves no residue.

3.1.3 Aluminum Surfaces

Aluminum surfaces to be in contact with sealants shall be cleaned of temporary protective coatings. When masking tape is used for a protective cover, the tape and any residual adhesive shall be removed just prior to

applying the sealant. Solvents used to remove protective coating shall be as recommended by the manufacturer of the aluminum work and shall be non-staining.

3.2 APPLICATION

3.2.1 Masking Tape

Masking tape shallbe placed on the finish surface on one or both sides of a joint cavity to protect adjacent finish surfaces from primer or sealant smears. Masking tape shall be removed within 10 minutes after joint has been filled and tooled.

3.2.2 Backing

Backing shall be installed to provide the indicated sealant depth. The installation tool shall be shaped to avoid puncturing the backing.

3.2.3 Bond-Breaker

Bond-breaker shall be applied to fully cover the bottom of the joint without contaminating the sides where sealant adhesion is required.

3.2.4 Primer

Primer shall be used on wood, or other porous surfaces in accordance with instructions furnished with the sealant. Primer shall be applied to the joint surfaces to be sealed. Surfaces adjacent to joints shall not be primed.

3.2.5 Sealant

Sealant shall be used before expiration of shelf life. Multi-component sealants shall be mixed according to manufacturer's printed instructions. Sealant in guns shall be applied with a nozzle of proper size to fit the width of joint. Joints shall be sealed as detailed in the drawings. Sealant shall be forced into joints with sufficient pressure to expel air and fill the groove solidly. Sealant shall be installed to the indicated depth without displacing the backing. Unless otherwise indicated, specified, or recommended by the manufacturer, the installed sealant shall be tooled so that the surface is uniformly smooth and free of wrinkles and to assure full adhesion to the sides of the joint. Sealants shall be installed free of air pockets, foreign embedded matter, ridges and sags. Sealer shall be applied over the sealant when and as specified by the sealant manufacturer.

3.3 CLEANING

The surfaces adjoining the sealed joints shall be cleaned of smears and other soiling resulting from the sealant application as work progresses.

-- End of Section --

SECTION 08330

OVERHEAD ROLLING DOORS

PART 1 GENERAL

1.1 REFERENCES

The publications listed below form a part of this specification to the extent referenced. The publications are referred to in the text by basic designation only.

AMERICAN SOCIETY FOR TESTING AND MATERIALS (ASTM)

ASTM A 525	(1993) General Requirements for Steel Sheet, Zinc-Coated (Galvanized) by the Hot-Dip Process
ASTM E 84	(1991a) Surface Burning Characteristics of Building Materials
ASTM E 330	(1990) Structural Performance of Exterior Windows, Curtain Walls, and Doors by Uniform Static Air Pressure Difference

AMERICAN SOCIETY OF HEATING, REFRIGERATING, AND AIR-CONDITIONING ENGINEERS (ASHRAE)

ASHRAE-03	(1993; Errata) Handbook, Fundamentals I-P Edition

NATIONAL ELECTRICAL MANUFACTURERS ASSOCIATION (NEMA)

NEMA ICS 2	(1993) Industrial Control Devices, Controllers and Assemblies
NEMA ICS 6	(1993) Enclosures for Industrial Control and Systems
NEMA MG 1	(1993) Motors and Generators

NATIONAL FIRE PROTECTION ASSOCIATION (NFPA)

NFPA 70	(1993) National Electrical Code
NFPA 80	(1992) Fire Doors and Windows

1.2 DESCRIPTION

Overhead rolling doors shall be spring counterbalanced, rolling type, with interlocking slats, complete with guides, fastenings, hood, brackets, and operating mechanisms, and shall be designed for use on openings as indicated. Each door shall be provided with a permanent label showing the manufacturer's name and address and the model number of the door.

1.2.1 Wind Load Requirements

Doors and components shall be designed to withstand the minimum design wind load of 960 pa (20 psf). Doors shall be constructed to sustain a superimposed load, both inward and outward, equal to 1-1/2 times the minimum design wind load. The door shall support the superimposed loads for a minimum period of 10 seconds without evidence of serious damage and shall be operable after conclusion of the tests. Test data showing compliance with design windload requirements for the specific door design tested in accordance with the uniform static air pressure difference test procedures of ASTM E 330 shall be provided.

1.2.2 Operational Cycle Life

All portions of the door and door operating mechanism that are subject to movement, wear, or stress fatigue shall be designed to operate through a

minimum of 50,000 cycles. (One complete cycle of door operation will begin with the door in the closed position, move to the full open position and return to the closed position.

1.3 SUBMITTALS

The following shall be submitted in accordance with Section 01300 SUBMITTAL DESCRIPTIONS:

SD-01 Data

Overhead Rolling Door Unit.

Manufacturer's catalog data, test data, and summary of forces and loads on the walls/jambs.

SD-04 Drawings

Overhead Rolling Door Unit.

Drawings showing the location of each door including schedules. Drawings shall include elevations of each door type, details and method of anchorage, details of construction, location and installation of hardware, shape and thickness of materials, details of joints and connections, and details of guides, power operators, controls, and other fittings.

SD-06 Instructions

Overhead Rolling Door Unit.

Manufacturer's preprinted installation instructions.

SD-19 Operation and Maintenance Manuals

Overhead Rolling Door Unit.

Six complete copies of operating instructions outlining the step-by-step procedures required for motorized door and shutter operation. The instructions shall include the manufacturer's name, model number, service manual, parts list, and brief description of all equipment and their basic operating features. Six complete copies of maintenance instructions listing routine maintenance procedures, possible breakdowns and repairs, troubleshooting guides, and simplified diagrams for the equipment as installed. Also spare parts data for each different item of material and equipment specified. The data shall include a complete list of parts and supplies, source of supply, and a list of the high mortality maintenance parts.

1.4 DELIVERY AND STORAGE

Doors shall be delivered to the jobsite wrapped in a protective covering with the brands and names clearly marked thereon. Doors shall be stored in a dry location that is adequately ventilated and free from dirt and dust, water, and other contaminants, and in a manner that permits easy access for inspection and handling.

1.5 WARRANTY

Manufacturer's standard performance guarantees or warranties that extend beyond a 1-year period shall be provided.

PART 2 PRODUCTS

2.1 OVERHEAD ROLLING DOORS

Doors shall be surface-mounted type with guides at jambs set back a sufficient distance to clear the opening. Exterior doors shall be mounted on interior side of walls.

2.1.1 Curtains

The curtains shall roll up on a barrel supported at the head of opening on brackets, and shall be balanced by helical springs. Steel slats for doors less than 4.5 m (15 feet) wide shall be minimum bare metal thickness of 0.85 mm (22 gauge). Slats shall be of the minimum bare metal decimal thickness required for the width indicated and the wind pressure specified above.

2.1.1.1 Insulated Curtains

The slat system shall supply a minimum R-value of 5 when calculated in accordance with ASHRAE-03. Slats shall be of the flat type as standard with the manufacturer. Slats shall consist of a urethane core not less than 17 mm (11/16 inch) thick, completely enclosed within metal facings. Exterior face of slats shall be gauge as specified for curtains. Interior face shall be not lighter than 0.70 mm (24 gauge). Insulation shall have a flame spread rating of not more than 25 and a smoke development factor of not more than 50 when tested in accordance with ASTM E 84.

2.1.2 Endlocks and Windlocks

The ends of each alternate slat for interior doors shall have malleable endlocks of manufacturer's stock design. In addition to endlocks, exterior doors shall have the manufacturer's standard windlocks as required to withstand the wind load. Windlocks shall prevent the curtain from leaving guides because of deflection from specified wind pressure.

2.1.3 Bottom Bar

The curtain shall have a standard bottom bar consisting of two hot-dip galvanized steel angles for steel doors. A sensing edge shall be attached to the bottom bar of doors that are electric-power operated.

2.1.4 Guides

Guides shall be steel structural shapes or formed steel shapes, of a size and depth to provide proper clearance for operation and resistance under the design windload. Guides shall be attached to adjoining construction with fasteners recommended by the manufacturer. Spacing of fasteners shall be as required to meet the minimum design windload.

2.1.5 Barrel

The barrel shall be steel pipe or commercial welded steel tubing of proper diameter for the size of curtain. Deflection shall not exceed 2.5 mm per meter (0.03 inch per foot) of span. Ends of the barrel shall be closed with cast-iron or steel plugs, machined to fit the pipe.

2.1.6 Springs

Oil tempered helical steel counter-balance torsion springs shall be installed within the barrel and shall be capable of producing sufficient torque to assure easy operation of the door curtain. Access shall be provided for spring tension adjustment from outside of the bracket without removing the hood.

2.1.7 Brackets

Brackets shall be of steel plates to close the ends of the roller-shaft housing, and to provide mounting surfaces for the hood. An operation bracket hub and shaft plugs shall have sealed prelubricated ball bearings.

2.1.8 Hoods

Hoods shall be steel with minimum bare metal thickness of 0.70 mm (24 gauge), formed to fit contour of the end brackets, and shall be reinforced with steel rods, rolled beads, or flanges at top and bottom edges. Multiple segment and single piece hoods shall be provided with support brackets of the manufacturer's standard design as required for adequate support.

2.1.9 Weatherstripping

Exterior doors shall be fully weatherstripped. A compressible and replaceable weather seal shall be attached to the bottom bar. Weather seal at door guides shall be continuous vinyl or neoprene, bulb or leaf type, or shall be nylon-brush type. A weather baffle shall be provided at the lintel or inside the hood. Weatherstripping shall be easily replaced without special tools.

2.1.10 Operation

Doors shall be operated by means of manual hand-chain.

2.1.10.1 Manual Hand-Chain Operation

Operation shall be by means of a galvanized, endless chain operating over a sprocket and extending to within 900 mm (3 feet) of floor. Reduction shall be provided by use of roller chain and sprocket drive or suitable gearing, to reduce the pull required on hand chain to not over 156 N. (35 pounds.) Gears shall be high grade gray cast iron.

2.1.11 Inertia Brake

Overhead rolling door shall have a mechanical inertia brake device which will stop the door from free fall in any position, should there be a failure in the motor operator brake or roller chain drive. The unit shall be capable of being reset with an easy back drive action.

2.1.12 Locking

Locking shall consist of chain lock keeper, suitable for padlock by others, for chain operated doors.

2.1.13 Finish

Steel slats and hoods shall be hot-dip galvanized G60 in accordance with ASTM A 525, and shall be treated for paint adhesion and shall receive a baked on prime coat and a baked on top coat. The paint system shall withstand a minimum of 1500 hours without blistering, bubbling, or rust. Surfaces other than slats, hood, and faying surfaces shall be cleaned and treated to assure maximum paint adherence and shall be given a factory dip or spray coat of rust inhibitive metallic oxide or synthetic resin primer. Color shall be in accordance with color schedule shown on Drawings.

PART 3 EXECUTION

3.1 INSTALLATION

Doors shall be installed in accordance with approved detail drawings and manufacturer's instructions. Anchors and inserts for guides, brackets, hardware, and other accessories shall be accurately located. Upon completion, doors shall be free from warp, twist, or distortion. Doors shall be lubricated, properly adjusted, and demonstrated to operate freely.

-- o O o --

SECTION 08810

GLASS AND GLAZING

PART 1 GENERAL

1.1 REFERENCES

The publications listed below form a part of this specification to the extent referenced. The publications are referred to in the text by basic designation only.

AMERICAN SOCIETY FOR TESTING AND MATERIALS (ASTM)

ASTM C 509	(1991) Elastomeric Cellular Preformed Gasket and Sealing Material
ASTM C 669	(1975; R 1989) Glazing Compounds for Back Bedding and Face Glazing of Metal Sash
ASTM C 864	(1990) Dense Elastomeric Seal Gaskets, Setting Blocks, and Spacers
ASTM C 920	(1987) Elastomeric Joint Sealants
ASTM C 1036	(1991) Flat Glass
ASTM C 1048	(1992) Heat-Treated Flat Glass - Kind HS, Kind FT Coated and Uncoated Glass
ASTM C 1172	(1991) Laminated Architectural Flat Glass
ASTM D 395	(1989) Rubber Property - Compression Set
ASTM E 773	(1988) Seal Durability of Sealed Insulating Glass Units
ASTM E 774	(1988) Sealed Insulating Glass Units

CODE OF FEDERAL REGULATIONS (CFR)

16 CFR 1201	Safety Standard for Architectural Glazing Materials

FLAT GLASS MARKETING ASSOCIATION (FGMA)

FGMA-01	(1990) Glazing Manual

1.2 SUBMITTALS

The following shall be submitted in accordance with Section 01300 SUBMITTAL DESCRIPTIONS:

SD-01 Data

Glass. Glazing Accessories.

Manufacturer's descriptive product data, handling and storage recommendations, installation instructions, and cleaning instructions.

SD-13 Certificates

Glass.

Certificates stating that the glass meets the specified requirements. Labels or marking affixed to the glass will be accepted in lieu of certificates.

SD-14 Samples

Glass.

Two 203.2 x 254 mm (8 x 10 inch) samples of insulating glass units.

1.3 SYSTEM DESCRIPTION

Glazing systems shall be fabricated and installed watertight and airtight to withstand thermal movement and wind loading without glass breakage, gasket failure, deterioration of glazing accessories, and defects in the work.

1.4 DELIVERY, STORAGE AND HANDLING

Glazing compounds shall be delivered to the site in the manufacturer's unopened containers. Glass shall be stored indoors in a safe, well ventilated dry location in accordance with manufacturer's instructions, and shall not be unpacked until needed for installation. Glass shall not be stored on site over 1 month.

1.5 PROJECT/SITE CONDITIONS

Glazing work shall not be started until outdoor temperature is above 5 degrees C (40 degrees F) and rising, unless procedures recommended by glass manufacturer and approved by Contracting Officer are made to warm the glass and rabbet surfaces. Ventilation shall be provided to prevent condensation of moisture on glazing work during installation. Glazing work shall not be performed during damp or raining weather.

1.6 WARRANTY

1.6.1 Insulating Glass

Manufacturer shall warrant the insulating glass to be free of fogging or film formation on the internal glass surfaces caused by failure of the hermetic seal for a period of 10 years from Date of Substantial Completion. Warranty shall be signed by manufacturer.

PART 2 PRODUCTS

2.1 ROLLED GLASS

2.1.1 Wired Glass

Wired glass shall be Type II flat type, Class 1 - translucent, Quality q8 - glazing, Form 1 - wired and polished both sides conforming to ASTM C 1036. Wire mesh shall be polished stainless steel Mesh 1 - diamond. Wired glass for fire-rated windows shall bear an identifying UL label or the label of a nationally recognized testing agency, and shall be rated for 45 minutes when tested in accordance with ASTM E 163. Wired glass for fire-rated doors shall be tested as part of a door assembly in accordance with ASTM E 152.

2.1.2 INSULATING GLASS

Insulating glass shall be Class A preassembled units of dual-seal construction consisting of lites of glass separated by an aluminum spacer and dehydrated space conforming to ASTM E 773 and ASTM E 774. Aluminum spacer shall be roll-formed, with bent or tightly soldered joints to completely seal the spacer periphery and eliminate moisture and hydrocarbon vapor transmission into airspace through the corners. Primary seal shall be compressed polyisobutylene and the secondary seal shall be a specially formulated silicone. Glass types shall be as follows:

2.3.1 Clear Insulating Glass

Glass for two-pane insulating units shall be laminated glass as specified in paragraph LAMINATED GLASS and conforming to ASTM C 1172. Glass performance shall be K-Value/Winter Nighttime 0.47._

2.2 HEAT-TREATED GLASS

Heat-treated glass shall conform to the following requirements.

2.2.1 Tempered Glass

Tempered glass shall be kind FT fully tempered transparent flat type, Class 1-clear, Condition A uncoated surface, Quality q3 - glazing select, conforming to ASTM C 1048.

2.3 LAMINATED GLASS

Laminated glass shall consist of two layers of tempered glass, as specified in paragraph Tempered Glass. Glass shall be bonded together with 1.52 mm (0.060 inch) thick PVB plastic interlayer under pressure, conforming to requirements of 16 CFR 1201 and ASTM C 1172.

2.4 GLAZING ACCESSORIES

2.4.1 Preformed Tape

Preformed tape shall be elastomeric rubber extruded into a ribbon of a width and thickness suitable for specific application. Tape shall be of type which will remain resilient, have excellent adhesion, and be chemically compatible to glass, metal, or wood.

2.4.2 Sealant

Sealant shall be elastomeric conforming to ASTM C 920, Type S or M, Grade NS, Class 12.5, Use G, of type chemically compatible with setting blocks, preformed sealing tape and sealants used in manufacturing insulating glass. Color of sealant shall be black.

2.4.2.1 Fixed Glazing Gaskets

Fixed glazing gaskets shall be closed-cell (sponge) smooth extruded compression gaskets of cured elastomeric virgin neoprene compounds conforming to ASTM C 509, Type 2, Option 1.

2.4.3 Setting and Edge Blocking

Neoprene setting blocks shall be dense extruded type conforming to ASTM D 395, Method B, Shore A durometer between 70 and 90. Edge blocking shall be Shore A durometer of 50 (+ or - 5). Silicone setting blocks shall be required when blocks are in contact with silicone sealant. Profiles, lengths and locations shall be as required and recommended in writing by glass manufacturer.

PART 3 EXECUTION

3.1 PREPARATION

Openings and framing systems scheduled to receive glass shall be examined for compliance with approved shop drawings, FGMA-01 and glass manufacturer's recommendations including size, squareness, offsets at corners, presence and function of weep system, face and edge clearance requirements and effective sealing between joints of glass-framing members. Detrimental materials shall be removed from glazing rabbet and glass surfaces and wiped dry with solvent. Glazing surfaces shall be dry and free of frost.

3.2 INSTALLATION

Glass and glazing work shall be performed in accordance with approved shop drawings, FGMA-01, glass manufacturer's instructions and warranty requirements. Glass shall be installed with factory labels intact and removed only when instructed. Wired glass shall be installed in accordance with NFPA 80. Edges and corners shall not be ground, nipped or cut after leaving factory. Springing, forcing or twisting of units during installation will not be permitted.

3.3 CLEANING

Upon completion of project, outside surfaces of glass shall be washed clean and the inside surfaces of glass shall be washed and polished in accordance with glass manufacturer's recommendations.

3.4 PROTECTION

Glass work shall be protected immediately after installation. Glazed openings shall be identified with suitable warning tapes, cloth or paper flags, attached with non-staining adhesives. Reflective glass shall be protected with a protective material to eliminate any contamination of the reflective coating. Protective material shall be placed far enough away from the coated glass to allow air to circulate to reduce heat buildup and moisture accumulation on the glass. Glass units which are broken, chipped, cracked, abraded, or otherwise damaged during construction activities shall be removed and replaced with new units.

-- o O o --

SECTION 09250

GYPSUM WALLBOARD

PART 1 GENERAL

1.1 REFERENCES

The publications listed below form a part of this specification to the extent referenced. The publications are referred to in the text by basic designation only.

AMERICAN SOCIETY FOR TESTING AND MATERIALS (ASTM)

ASTM C 36	(1993) Gypsum Wallboard
ASTM C 475	(1989) Joint Compound and Joint Tape for Finishing Gypsum Board
ASTM C 630	(1993) Water-Resistant Gypsum Backing Board
ASTM C 645	(1992) Non-Load (Axial) Bearing Steel Studs, Runners (Track), and Rigid Furring Channels for Screw Application of Gypsum Board
ASTM C 754	(1988) Installation of Steel Framing Members to Receive Screw-Attached Gypsum
ASTM C 840	(1988) Application and Finishing of Gypsum Board
ASTM C 1002	(1993) Steel Drill Screws for the Application of Gypsum Board or Metal Plaster Bases

FEDERAL SPECIFICATIONS (FS)

FS QQ-N-281	(Rev D; Am 2) Nickel-Copper Alloy Bar, Rod, Plate, Sheet, Strip, Wire, Forgings and Structural and Special Shaped Sections

UNDERWRITERS LABORATORIES (UL)

UL-05	(1993; supple) Fire Resistance Directory

1.2 SYSTEM DESCRIPTION

1.2.1 Fire-Rated Construction

Joints of fire-rated gypsum board enclosures shall be closed and sealed in accordance with UL requirements, and as required to meet pressurization requirements. Penetrations through rated partitions and ceilings shall be sealed tight with rated firestopping materials. Fire ratings shall be as indicated.

1.3 SUBMITTALS

The following shall be submitted in accordance with Section 01300 SUBMITTAL DESCRIPTIONS:

SD-04 Drawings

Steel Framing. Control Joints.

Drawings and installation details for ceiling framing, furring, special wall framing, and framed openings in walls and ceilings.

SD-13 Certificates

Gypsum Wallboard. Water-Resistant Gypsum Board.

Steel Framing.

Certificates stating that the steel framing and gypsum wallboard meet the specified requirements.

1.4 QUALIFICATIONS

Manufacturer shall specialize in manufacturing the types of material specified and shall have a minimum of 10 years of documented successful experience. Installer shall specialize in the type of gypsum board work required and shall have a minimum of 5 years of documented successful experience.

1.5 DELIVERY, STORAGE AND HANDLING

Materials shall be delivered in original containers bearing the name of manufacturer, contents, and brand name. Materials shall be stored off the ground in a weathertight structure for protection. Gypsum boards shall be stacked flat, off floor and supported to prevent sagging and warpage. Adhesives and joint materials shall be stored in accordance with manufacturer's printed instructions. Damaged or deteriorated materials shall be removed from jobsite.

1.6 ENVIRONMENTAL CONDITIONS

Environmental conditions for application and finishing of gypsum board shall be in accordance with ASTM C 840. During the application of gypsum board without adhesive, a room temperature of not less than 4 degrees C (40 degrees F) shall be maintained. During the application of gypsum board with adhesive, a room temperature of not less than 10 degrees C (50 degrees F) shall be maintained for 48 hours prior to application and continuously afterwards until completely dry. Building spaces shall be ventilated to remove water not required for drying joint treatment materials. Drafts shall be avoided during dry hot weather to prevent materials from drying too rapidly.

PART 2 MATERIALS

2.1 NON-LOADBEARING STUD WALLS

2.1.1 Studs

Studs for non-loadbearing walls shall conform to ASTM C 645. Studs shall be prefabricated 1.214 mm thick (18 gauge) steel, C-shaped, punched web for utility access, G60 hot-dip galvanized after fabrication, or truss-designed studs fabricated of 1.519mm thick (16 gauge) steel angles with a single No. 7 gauge rod forming an open-web truss-like pattern between flanges with all points contact welded.

2.1.1 Runner Tracks

Floor and ceiling runner tracks shall conform to ASTM C 645. Tracks shall be prefabricated, U-shaped with minimum 22 mm (7/8 inch) flanges, unpunched web, gauge to match studs, G60 hot-dip galvanized after fabrication.

2.2 GYPSUM BOARD

Gypsum board shall have square-cut ends, tapered or beveled edges and shall be maximum possible length.

2.2.1 Standard Gypsum Board

Regular gypsum board shall conform to ASTM C 36, and shall be 1200 mm (48 inches) wide.

2.2.2 Fire-Rated Gypsum Board

Fire-rated gypsum board shall conform to ASTM C 36, and shall be Type X, 1200 mm (48 inches) wide.

2.2.3 Water-Resistant Gypsum Board

Water-resistant gypsum board shall conform to ASTM C 630, regular and with water-resistant paper faces, paintable surfaces, and shall be 1200 mm (48 inch) width and maximum permissible length.

2.3 ACCESSORIES

2.3.1 Taping and Embedding Compound

Taping and embedding compound shall conform to ASTM C 475. Compound shall be specifically formulated and manufactured for use in embedding tape at gypsum wallboard joints and fastener heads, and shall be compatible with tape and substrate.

2.3.2 Finishing or Topping Compound

Finishing or topping compound shall conform to ASTM C 475. Compound shall be specifically formulated and manufactured for use as a finishing compound for gypsum board.

2.3.3 All-Purpose Compound

All-purpose compound shall be specifically formulated and manufactured to use as a taping and finishing compound, and shall be compatible with tape and substrate.

2.3.4 Joint Tape

Joint tape shall conform to ASTM C 475 and shall be as recommended by gypsum board manufacturer.

2.3.5 Screws

Screws shall conform to ASTM C 1002. Screws shall be self-drilling and self-tapping steel, Type S for wood or light-gauge steel framing.

PART 3 EXECUTION

3.1 INTERIOR WALL FRAMING

Steel framing and furring members shall be installed in accordance with ASTM C 754. Members shall be in alignment with spacings not to exceed the maximum spacings indicated on drawings. Runners shall be aligned accurately at the floor and ceiling and securely anchored.

3.1.1 Wall Openings

The framing system shall provide for the installation and anchorage of the required subframes or finish frames for wall openings at doors, pass-through openings, and access panels. Partitions abutting continuous suspended ceilings shall be strengthened for rigidity at rough openings of more than 750 mm (30 inches) wide. Studs at openings shall be 0.912 mm thick (20 gauge) minimum bare metal thickness and spot grouted at jamb anchor inserts. Double studs shall be fastened together with screws and secured to floor and overhead runners. Two studs placed back-to-back shall be used for framing doors.

3.1.2 Wall Control Joints

Control joints for expansion and contraction shall be constructed with double studs installed 13 mm (1/2 inch) apart in interior walls or wall furrings where indicated on drawings, but shall not exceed 9 mm (30 feet) between control joints. Ceiling-height door frames may be used as vertical control joints. Door frames of less than ceiling height may be used as control joints only if standard control joints extend to ceiling from both corners of top of door frame. Control joints between studs shall be filled with firesafing insulation.

3.2 APPLICATION OF GYPSUM BOARD

Gypsum board shall be installed in accordance with ASTM C 840 and as specified. Edges and ends of gypsum boards shall be cut to obtain neat fitting joints. End joints of adjoining boards shall be staggered, and shall be staggered on opposite sides of wall. Boards shall be applied with moderate contact without forcing in place. Holes for pipes, fixtures or other small openings shall be cut with a tool which will provide a neat fit. Screws shall be driven so that the heads are slightly below the plane of paper face. Fracturing the paper face or damaging the core shall be avoided. Trim shall be installed at external and internal angles formed by the intersecting gypsum board surfaces with other surfaces. Corner beads shall be installed to vertical and horizontal corners in accordance with manufacturer's published instructions.

3.2.1 Backing Board

Gypsum board and water-resistant gypsum backing board used as a substrate to receive ceramic tile shall be in accordance with ASTM C 840, System X.

3.3 TAPING AND FINISHING

Gypsum board taping and finishing shall be performed in accordance with ASTM C 840. Boards shall be kept free of dirt, oil and other foreign matter that could cause a lack of bond. Screw heads, dents, gouges, and cut-outs shall be filled with joint compound and sanded. Accessories at exposed joints, edges, corners, openings, and similar locations shall be taped, floated with joint compound, and sanded to produce surfaces ready for gypsum board finishes.

3.4 FIRE-RESISTANT ASSEMBLIES

Gypsum wallboard construction for fire-rated assemblies shall be in accordance with UL-05 for the design number indicated on drawings.

3.5 PATCHING

Surface defects and damage shall be corrected as required to leave gypsum board smooth, uniform in appearance, and ready to receive finish as specified.

-- o O o --

SECTION 09310

CERAMIC TILE

PART 1 GENERAL

1.1 REFERENCES

The publications listed below form a part of this specification to the extent referenced. The publications are referred to in the text by basic designation only.

AMERICAN NATIONAL STANDARDS INSTITUTE (ANSI)

ANSI A108.5	(1992) Installation of Ceramic Tile with Dry-Set Portland Cement Mortar or Latex-Portland Cement Mortar
ANSI A108.10	(1992) Installation of Grout in Tilework
ANSI A118.4	(1992) Latex-Portland Cement Mortar
ANSI A118.6	(1992) Ceramic Tile Grouts
ANSI A137.1	(1988) Ceramic Tile
ASTM C 373	(1988) Water Absorption, Bulk Density, Apparent Porosity, and Apparent Specific Gravity of Fired Whiteware Products
ASTM C 648	(1984; R 1989) Breaking Strength of Ceramic Tile
ASTM C 1027	(1984; R 1990) Determining Visible Abrasion Resistance of Glazed Ceramic Tile
ASTM C 1028	(1989) Determining the Static Coefficient of Friction of Ceramic Tile and Other Like Surfaces by the Horizontal Dynamometer Pull-Meter Method

TILE COUNCIL OF AMERICA (TCA)

TCA-01	(1994) Handbook for Ceramic Tile Installation

1.2 SUBMITTALS

The following shall be submitted in accordance with Section 01300 SUBMITTAL DESCRIPTIONS:

SD-01 Data

Tile. Setting-Bed. Mortar, Grout, and Adhesive.

Manufacturer's catalog data.

SD-06 Instructions

Tile. Mortar and Grout.

Manufacturers preprinted installation and cleaning instructions.

SD-13 Certificates

Tile. Mortar, Grout, and Adhesive.

Certificates indicating conformance with specified requirements. A master grade certificate shall be furnished for tile.

SD-14 Samples

Tile. Accessories.

Samples of sufficient size to show color range, pattern, type and joints.

1.3 DELIVERY AND STORAGE

Materials shall be delivered to the project site in manufacturer's original unopened containers with seals unbroken and labels and hallmarks intact. Materials shall be kept dry, protected from weather, and stored under cover.

1.4 ENVIRONMENTAL REQUIREMENTS

Ceramic tile work shall not be performed unless the substrate and ambient temperature is at least 10 degrees C (50 degrees F) and rising. Temperature shall be maintained above 10 degrees C (50 degrees F) while the work is being performed and for at least 7 days after completion of the work. When temporary heaters are used they shall be vented to the outside to avoid carbon dioxide damage to new tilework.

1.5 WARRANTY

Manufacturer's standard performance guarantees or warranties that extend beyond a 1-year period shall be provided.

PART 2 PRODUCTS

2.1 TILE

Tile shall be standard grade conforming to ANSI A137.1. Containers shall be grade sealed. Seals shall be marked to correspond with the marks on the signed master grade certificate. Tile shall be impact resistant with a minimum breaking strength for wall tile of 41 kg (90 lbs) and 113 kg (250 lbs) for floor tile in accordance with ASTM C 648. Water absorption shall be 0.5 maximum percent in accordance with ASTM C 373. Floor tile shall have a minimum static coefficient of friction of 0.5 in accordance with ASTM C 1028. Tile shall be Class III as rated by the manufacturer when tested in accordance with ASTM C 1027 for abrasion resistance as related to foot traffic.

2.1.1 Mosaic Tile

Ceramic mosaic tile and trim shall be unglazed natural clay with cushion edges or porcelain unpolished with sharply formed face. Tile size shall be 50 by 50 mm (2 by 2 inches) of standard sizes in a stock pattern. Color shall be as shown on Drawings.

2.1.2 Glazed Wall Tile

Glazed wall tile and trim shall be cushion edged with matte glaze. Tile shall be 106 by 106 mm. (4-1/4 by 4-1/4 inches.) Color shall be as shown on Drawings.

2.2 MORTAR, GROUT, AND ADHESIVE

Mortar, grout, and adhesive shall conform to the following:

2.2.1 Latex-Portland Cement Mortar

ANSI A118.4.

2.2.2 Ceramic Tile Grout

ANSI A118.6; latex-portland cement grout.

PART 3 EXECUTION

3.1 PREPARATORY WORK AND WORKMANSHIP

Surface to receive tile shall be inspected and shall conform to the requirements of ANSI A108.1A or ANSI A108.1B for surface conditions for the type setting bed specified and for workmanship. Variations of surface to be tiled shall fall within maximum values shown below:

TYPE	WALLS	FLOORS
Latex portland cement mortar	3 mm in 2.4 meter	3.0 mm in 3 meter

TYPE	WALLS	FLOORS
Latex portland cement mortar	1/8 inch in 8 ft.	1/8 inch in 10 ft.

3.2 GENERAL INSTALLATION REQUIREMENTS

Tile work shall not be started until roughing in for mechanical and electrical work has been completed and tested, and built-in items requiring membrane waterproofing have been installed and tested. Floor tile installation shall not be started in spaces requiring wall tile until after wall tile has been installed. Tile in colors and patterns indicated shall be applied in the area shown on the drawings. Tile shall be installed with the respective surfaces in true even planes to the elevations and grades shown. Special shapes shall be provided as required for sills, jambs, recesses, offsets, external corners, and other conditions to provide a complete and neatly finished installation. Tile bases and coves shall be solidly backed with mortar.

3.3 INSTALLATION OF WALL TILE

Wall tile shall be installed in accordance with the TCA-01, method W243.

3.3.1 Latex-Portland Cement Mortar

Latex-portland cement shall be used to install tile in accordance with ANSI A108.5. Latex portland cement shall be used when installing porcelain ceramic tile.

3.4 INSTALLATION OF FLOOR TILE

Floor tile shall be installed in accordance with TCA-01, method F113.

3.4.1 Latex-Portland Cement

Latex-portland cement mortar shall be used to install tile directly over properly cured, plane, clean concrete slabs in accordance with ANSI A108.5. Latex portland cement shall be used when installing porcelain ceramic tile.

3.4.2 Ceramic Tile Grout

Ceramic Tile grout shall be prepared and installed in accordance with ANSI A108.10.

3.5 CONTROL JOINTS

Joints shall be formed as indicated and sealed as specified in Section 07920 JOINT SEALING.

3.5.1 Walls

Control joints shall be provided at control joints in backing material. Wherever backing material changes, a control joint shall be formed to separate the different materials.

3.5.2 Floors

Control joints shall be provided over construction joints, control joints, and expansion joints in concrete slabs.

3.6 CLEANING AND PROTECTING

Upon completion, tile surfaces shall be thoroughly cleaned in accordance with manufacturer's approved cleaning instructions. Acid shall not be used for cleaning glazed tile. Floor tile with resinous grout or with factory mixed grout shall be cleaned in accordance with instructions of the grout manufacturer. After the grout has set, tile wall surfaces shall be given a protective coat of a noncorrosive soap or other approved method of protection. Tiled floor areas shall be covered with building paper before foot traffic is permitted over the finished tile floors. Board walkways shall be laid on tiled floors that are to be continuously used as passageways by workmen. Damaged or defective tiles shall be replaced.

-- o O o --

SECTION 09510

ACOUSTICAL CEILINGS

PART 1 GENERAL

1.1 REFERENCES

The publications listed below form a part of this specification to the extent referenced. The publications are referred to in the text by basic designation only.

AMERICAN SOCIETY FOR TESTING AND MATERIALS (ASTM)

ASTM C 635	(1991) Manufacture performance, and Testing of Metal Suspension Systems for Acoustical Tile and Lay-In Panel Ceilings
ASTM C 636	(1991) Installation of Metal Ceiling Suspension Systems for Acoustical Tile and Lay-In Panels
ASTM E 413	(1987) Rating Sound Insulation
ASTM E 1264	(1990) Standard Classification for Acoustical Ceiling Products

1.2 GENERAL REQUIREMENTS

Acoustical treatment shall consist of sound controlling units mechanically mounted on a suspended ceiling system. The unit size, texture, finish, and color shall be as specified herein. The location and extent of acoustical treatment shall be as shown on the drawings.

1.3 SUBMITTALS

The following shall be submitted in accordance with Section 01300 SUBMITTAL DESCRIPTIONS:

SD-01 Data

Acoustical Ceiling System.

Manufacturer's descriptive data and installation instructions.

SD-04 Drawings

Acoustical Ceiling System.

Drawings shall show suspension system, method of anchoring and fastening, and reflected ceiling plan.

SD-13 Certificates

Ceiling Sound Transmission Class and Test.

Test reports by an independent testing laboratory attesting that acoustical ceiling systems meet specified sound transmission requirements.

SD-14 Samples

Acoustical Units.

Two samples of each type of acoustical unit showing texture, finish, and color.

1.4 DELIVERY AND STORAGE

Materials shall be delivered to the site in the manufacturer's original unopened containers with brand name and type clearly marked. Materials

shall be carefully handled and stored in dry, watertight enclosures. Immediately before installation, acoustical units shall be stored for not less than 24 hours at the same temperature and relative humidity as the space where they will be installed to assure temperature and moisture conditions.

1.5 ENVIRONMENTAL REQUIREMENTS

A uniform temperature of not less than 16 degrees C (60 degrees F) nor more than 27 degrees C (80 degrees F) and a relative humidity of not more than 70 percent shall be maintained before, during, and after installation of acoustical units.

1.6 SCHEDULING

Interior finish work such as concrete shall be complete and dry before installation. Mechanical, electrical, and other work above the ceiling line shall be completed and heating, ventilating, and air conditioning systems shall be installed and operating in order to maintain temperature and humidity requirements.

PART 2 PRODUCTS

2.1 ACOUSTICAL UNITS

Acoustical units shall conform to ASTM E 1264, Class A, and the following requirements:

2.1.1 Units for Exposed-Grid System

Type: III
Pattern: d fissured.
Nominal size: 600 by 600 mm.
Edge detail: Trimmed and butt.
Finish: Factory-applied white finish.
LR grade: 1.
STC range: 40-44.

Type: III
Pattern: d fissured.
Nominal size: 24 by 24 inches.
Edge detail: Trimmed and butt.
Finish: Factory-applied white finish.
LR grade: 1.
STC range: 40-44.

2.2 SUSPENSION SYSTEM

Suspension system shall be exposed-grid and shall conform to ASTM C 635 for heavy-duty systems and Section 13080 SEISMIC PROTECTION FOR MECHANICAL, ELECTRICAL EQUIPMENT. Surfaces exposed to view shall be aluminum or steel with a factory-applied white baked-enamel finish. Wall molding shall have a flange of not less than 23 mm (15/16 inch) and shall be provided with outside corner caps. Inside corner caps shall be provided where, due to the configuration of the installation, they are needed to produce a workmanlike appearance.

2.3 HANGERS

Hangers shall be galvanized steel wire. Hangers and attachment shall support a minimum 1330 N (300 pound) ultimate vertical load without failure of supporting material or attachment.

PART 3 EXECUTION

3.1 INSTALLATION

Acoustical work shall be provided complete with all necessary fastenings, clips, and other accessories required for a complete installation.

Mechanical fastenings shall not be exposed in the finished work. Hangers shall be laid out for each individual room or space. Hangers shall be placed to support framing around beams, ducts, columns, grilles, and other penetrations through ceilings. Main runners and carrying channels shall be kept clear of abutting walls and partitions. At least two main runners shall be provided for each ceiling span. Wherever required to bypass an object with the hanger wires, a subsuspension system shall be installed, so that all hanger wires will be plumb. Splayed hanger wires may be used if an opposite countersplayed wire of the same angle as the first wire is installed and attached to the same supporting member.

3.1.1 Suspension System

Suspension system shall be installed in accordance with ASTM C 636, Section 13080 SEISMIC PROTECTION FOR MECHANICAL, ELECTRICAL EQUIPMENT, and as specified herein. There shall be no hanger wires or other loads suspended from underside of steel decking.

3.1.1.1 Plumb Hangers

Hangers shall be plumb and shall not press against insulation covering ducts and pipes.

3.1.1.2 Splayed Hangers

Where hangers must be splayed (sloped or slanted) around obstructions, offset the resulting horizontal force by bracing, countersplaying, or other acceptable means.

3.1.2 Wall Molding

Wall molding shall be provided where ceilings abut vertical surfaces. Wall molding shall be secured not more than 75 mm (3 inches) from ends of each length and not more than 400 mm (16 inches) on centers between end fastenings. Wall molding springs shall be provided at each acoustical unit in semiexposed or concealed systems.

3.1.3 Acoustical Units

Acoustical units shall be installed in accordance with the approved installation instructions of the manufacturer. Edges of acoustical units shall be in close contact with metal supports, with each other, and in true alignment. Acoustical units shall be arranged so that units less than one-half width are minimized. Units in exposed-grid system shall be held in place with manufacturer's standard hold-down clips, if units weigh less than 5 kg per square m. (1 psf.)

3.2 CLEANING

Following installation, dirty or discolored surfaces of acoustical units shall be cleaned and left free from defects. Units that are damaged or improperly installed shall be removed and new units provided as directed.

-- o O o --

SECTION 09650

RESILIENT FLOORING

PART 1 GENERAL

1.1 REFERENCES

The publications listed below form a part of this specification to the extent referenced. The publications are referred to in the text by basic designation only.

AMERICAN SOCIETY FOR TESTING AND MATERIALS (ASTM)

ASTM F 1066	(1987) Vinyl Composition Floor Tile
ASTM F-1344	(1991) Rubber Floor Tile

FEDERAL SPECIFICATIONS (FS)

FS L-F-475	(Rev A; Am 1; Int Am 3) Floor Covering Vinyl, Surface (Tile and Roll), with Backing
FS L-F-001641	(Basic; Am 2) Floor Covering Translucent or Transparent Vinyl Surface with Backing
FS P-F-430	(Rev C; Am 1) Finish, Floor, Water-Emulsion (For Use on Light Colored Floors)
FS P-W-155	(Rev C; Int Am 1) Wax, Floor, Water-Emulsion
FS SS-W-40	(Rev A; Int Am 1; Notice 1) Wall Base: Rubber, and Vinyl Plastic

1.2 SUBMITTALS

The following shall be submitted in accordance with Section 01300 SUBMITTAL DESCRIPTIONS:

SD-01 Data

Resilient Flooring and Accessories.

Manufacturer's descriptive data and installation instructions. Cleaning and maintenance instructions shall be included.

SD-09 Reports

Resilient Flooring and Accessories.

Copies of test reports showing that representative product samples of the flooring proposed for use have been tested by an independent testing laboratory within the past year and conform to the requirements specified.

SD-14 Samples

Resilient Flooring and Accessories.

Three samples of each indicated color and type of flooring and base. Sample size shall be minimum 75 mm by 125 mm. (3 inches by 5 inches.)

1.3 DELIVERY AND STORAGE

Materials shall be delivered to the building site in original unopened containers, shall be stored in a clean dry area with temperature maintained above 21 degrees C (70 degrees F) for 2 days prior to installation, and shall be stacked according to manufacturer's recommendations.

1.4 ENVIRONMENTAL REQUIREMENTS

Areas to receive resilient flooring shall be maintained at a temperature above 21 degrees C (70 degrees F) for 2 days before application, during application and 2 days after application. A minimum temperature of 13 degrees C (55 degrees F) shall be maintained thereafter.

1.5 SCHEDULING

Resilient flooring application shall be scheduled after the completion of other work which would damage the finished surface of the flooring.

1.6 EXTRA MATERIALS

Extra flooring material of each color and pattern shall be furnished at the rate of 5 tiles for each 1000 tiles. Extra materials shall be from the same lot as those installed. Extra base material composed of 6 m (20 linear feet) of each color shall be furnished.

PART 2 PRODUCTS

2.1 VINYL-COMPOSITION TILE

Vinyl-composition tile shall conform to ASTM F 1066, Class 1, (solid color tile), Composition 1, asbestos-free, and shall be 300 mm square (12 inches square) and 3.2 mm (1/8 inch) thick. Tile shall have the color and pattern uniformly distributed throughout the thickness of the tile. Flooring in any one continuous area shall be from the same lot and shall have the same shade and pattern. Color and pattern shall be as indicated.

2.2 RESILIENT BASE

Base shall conform to FS SS-W-40, Type I (rubber) or Type II (vinyl). Butt toe (cove)-installed with 3 mm (1/8 inch) thick flooring. Base shall be 101.6 mm (4 inches) high and a minimum 3 mm (1/8 inch) thick. Preformed outside corners shall be furnished. Color shall be as indicated.

2.3 EDGE STRIP

Edge strip shall be vinyl, 25 mm (1 inch) wide, and of thickness to match the flooring. Color shall match wall base color unless otherwise indicated.

2.4 ADHESIVE

Adhesive for flooring and wall base shall be as recommended by the flooring manufacturer.

2.5 POLISH

Polish shall conform to FS P-F-430 or FS P-W-155.

PART 3 EXECUTION

3.1 EXAMINATION/VERIFICATION OF CONDITIONS

The Contractor shall verify that site conditions are in agreement with the design package and shall report all conditions that will prevent a proper installation. The Contractor shall not take any corrective action without written permission from the Government.

3.2 SURFACE PREPARATION

Flooring shall be in a true, level plane, except where indicated as sloped. Before any work under this section is begun, all defects such as rough or scaling concrete, low spots, high spots, and uneven surfaces shall have been corrected, and all damaged portions of concrete slabs shall have been repaired as recommended by the flooring manufacturer. Concrete curing

compounds, other than the type that does not adversely affect adhesion, shall be entirely removed from the slabs.

3.3 MOISTURE TEST

The suitability of the concrete subfloor for receiving the resilient flooring with regard to moisture content shall be determined by a moisture test as recommended by the flooring manufacturer.

3.4 INSTALLATION OF VINYL-COMPOSITION TILE AND SOLID VINYL TILE

Tile flooring shall be installed with adhesive in accordance with the manufacturer's installation instructions. Tile lines and joints shall be kept square, symmetrical, tight, and even. Each floor shall be in a true, level plane, except where indicated as sloped. Edge width shall vary as necessary to maintain full-size tiles in the field, but no edge tile shall be less than one-half the field tile size, except where irregular shaped rooms make it impossible. Flooring shall be cut to, and fitted around, all permanent fixtures, built-in furniture and cabinets, pipes, and outlets. Edge tile shall be cut, fitted, and scribed to walls and partitions after field flooring has been applied.

3.5 INSTALLATION OF EDGE STRIPS

Edge strips shall be secured with adhesive as recommended by the manufacturer. Edge strips shall be provided at locations where flooring termination is higher than the adjacent finished flooring, except at doorways where thresholds are provided.

3.6 INSTALLATION OF RESILIENT BASE

Wall base shall be installed with adhesive in accordance with the manufacturer's instructions. Base joints shall be tight and base shall be even with adjacent resilient flooring.

3.7 CLEANING

Immediately upon completion of installation of tile in a room or an area, flooring and adjacent surfaces shall be cleaned to remove all surplus adhesive. No sooner than 5 days after installation, flooring shall be washed with a nonalkaline cleaning solution, rinsed thoroughly with clear cold water, and, except for raised pattern flooring and static control vinyl tile, given two coats of polish. After each polish coat, floors shall be buffed to an even luster with an electric polishing machine.

3.8 PROTECTION

From the time of laying until acceptance, flooring shall be protected from damage. Flooring which becomes damaged, loose, broken, or curled shall be removed and replaced.

-- o O o --

SECTION 09900

PAINTING, GENERAL

PART 1 GENERAL

1.1 REFERENCES

The publications listed below form a part of this specification to the extent referenced. The publications are referred to in the text by basic designation only.

AMERICAN SOCIETY FOR TESTING AND MATERIALS (ASTM)

ASTM C 150	(1989) Portland Cement
ASTM D 4214	(1989) Evaluating the Degree of Chalking of Exterior Paint Films

COMMERCIAL ITEM DESCRIPTIONS (CID)

CID A-A-1500	(Rev A) Sealer, Surface (Latex Block Filler)

FEDERAL SPECIFICATIONS (FS)

FS TT-C-535	(Rev B; Am 2) Coating, Epoxy, Two Component, for Interior Use on Metal, Wood, Wallboard, Painted Surfaces Concrete and Masonry
FS TT-C-542	(Rev E) Coating, Polyurethane, Oil-Free, Moisture Curing
FS TT-E-489	(Rev H) Enamel, Alkyd, Gloss, Low Voc Content
FS TT-E-505	(Rev B) Enamel (Odorless, Alkyd, Interior, High Gloss)
FS TT-E-506	(Rev K; Am 1) Enamel, Alkyd, Gloss, Tints and White (for Interior Use)
FS TT-E-508	(Rev C; Am 1) Enamel, Interior Semigloss, Tints and White
FS TT-E-509	(Rev C) Enamel, Odorless, Alkyd, Interior, Semigloss, White and Tints
FS TT-E-545	(Rev C) Primer (Enamel-Undercoat, Alkyd, Odorless, Interior, Flat, Tints and White)
FS TT-F-1098	(Rev D) Filler, Block, Solvent-Thinned, for Porous Surfaces (Concrete Block, Cinder Block, Stucco, Etc.)
FS TT-P-19	(Rev D) Paint, Latex (Acrylic Emulsion, Exterior Wood and Masonry)
FS TT-P-29	(Rev J; Am 1, Int Am 2) Paint, Latex Base, Interior, Flat, White and Tints
FS TT-P-30	(Rev E; Am 1) Paint, Alkyd, Odorless, Interior, Flat, White and Tints
FS TT-P-31	(Rev D) Paint, Oil: Iron-Oxide, Ready- Mixed, Red and Brown
FS TT-P-38	(Rev E) Paint, Aluminum (Ready-Mixed)
FS TT-P-95	(rev C; AM1) Paint, Rubber; For Swimming Pools and other Concrete and Masonry Surfaces

FS TT-P-102	(Rev E; Int Am 1) Paint, Oil, Alkyd Modified, Exterior, White and Tints
FS TT-P-645	(Rev B) Primer, Paint, Zinc-Molybdate, Alkyd Type
FS TT-P-650	(Rev D) Primer Coating, Latex Base, Interior, White (for Gypsum Wallboard, or Plaster)
FS TT-P-1511	(Rev B) Paint, Latex (Gloss and Semigloss, Tints and White) (for Interior Use)
FS TT-P-002119	(Basic) Paint, Latex Base, High Traffic Area, Flat and Eggshell Finish (Low Lustre), (For Interior Use)

FEDERAL STANDARDS (FED-STD)

FED-STD 313	(Rev C) Material Safety Data, Transportation Data and Disposal Data for Hazardous Materials Furnished to Government Activities

STEEL STRUCTURES PAINTING COUNCIL (SSPC)

SSPC Paint 5	(1982) Zinc Dust, Zinc Oxide and Phenolic Varnish Paint
SSPC Paint 16	(1991) Coal Tar Epoxy-Polyamide Black Paint
SSPC Paint 18	(1982) Chlorinated Rubber Intermediate Coat Paint
SSPC Paint 21	(1982) White or Colored Silicone Alkyd Paint
SSPC Paint 22	(1991) Epoxy-Polyamide Paints
SSPC Paint 25	(1982) Red Iron Oxide, Zinc Oxide, Raw Linseed Oil and Alkyd Primer (without Lead and Chromate Pigments)
SSPC SP 1	(1982) Solvent Cleaning
SSPC SP 3	(1989) Power Tool Cleaning
SSPC SP 6	(1989) Commercial Blast Cleaning
SSPC SP 7	(1989) Brush-Off Blast Cleaning
SSPC SP 10	(1989) Near-White Blast Cleaning

1.2 SUBMITTALS

The following shall be submitted in accordance with Section 01300 - SUBMITTALS:

SD-01, Data

Paint.

The names, quantity represented, and intended use for the proprietary brands of materials proposed to be substituted for the specified materials when the required quantity of a particular color is 50 gallons or less.

SD-06, Instructions

Mixing and Thinning.

Application.

Manufacturer's current printed product description, material safety data sheets (MSDS) and technical data sheets for each coating system. MSDS submittals shall meet the requirements of FED-STD 313. Detailed mixing, thinning and application instructions, minimum and maximum application temperature, and curing and drying times between coats for epoxy and moisture-curing polyurethane coatings.

SD-09, Reports

Paint.

A statement as to the quantity represented and the intended use, plus the following test report for batches in excess of 50 gallons:

a. A test report showing that the proposed batch to be used meets all specification requirements, or:

b. A test report showing that a previous batch of the same formulation as the batch to be used met all specification requirements, plus, on the proposed batch to be used, a report of test results for properties of weight per gallon, viscosity, fineness of grind, drying time, color, and gloss.

SD-13, Certificates

Lead.

Mildewcide and Insecticide.

Volatile Organic Compound (VOC) Content.

Certificate stating that paints for interior use contain no mercurial mildewcide or insecticide. Certificate stating that paints proposed for use contain not more than 0.06 percent lead. Certificate stating that paints proposed for use meet the VOC regulations of the local Air Pollution Control Districts having jurisdiction over the geographical area in which the project is located.

SD-14, Samples

Moisture-curing Polyurethane.

A complete moisture-curing polyurethane system applied to a panel of the same material as that on which the coating will be applied in the work and for each color specified. The sample panels will be used for quality control in applying the system.

Paint.

While the material is at the site or source of supply, and at a time agreeable to the Contractor and the Contracting Officer, a 1-quart sample of each color and batch, except for quantities of 50 gallons or less, shall be taken by random selection from the sealed containers by the Contractor in the presence of a representative of the Contracting Officer. The contents of the containers to be sampled shall be thoroughly mixed to ensure that the sample is representative. Samples shall be identified by designated name, specification number, manufacturer name and address, batch number, project contract number, intended use, and quantity involved.

1.3 PACKAGING, LABELING, AND STORING

Paints shall be in sealed containers that legibly show the designated name, formula or specification number, batch number, color, quantity, date of manufacture, manufacturer's formulation number, manufacturer's directions including any warnings and special precautions, and name of manufacturer. Pigmented paints shall be furnished in containers not larger than 5 gallons. Paints and thinner shall be stored in accordance with the manufacturer's written directions and as a minimum stored off

the ground, under cover, with sufficient ventilation to prevent the buildup of flammable vapors and at temperatures between 40 and 95 degrees F. Paints shall be stored on the project site or segregated at the source of supply sufficiently in advance of need to allow 30 days for testing.

1.4 APPROVAL OF MATERIALS

When samples are tested, approval of materials will be based on tests of the samples; otherwise, materials will be approved based on test reports furnished with them. If materials are approved based on test reports furnished, samples will be retained by the Government for testing should the materials appear defective during or after application. In addition to any other remedies under the contract the cost of retesting defective materials will be at the Contractor's expense.

1.5 ENVIRONMENTAL CONDITIONS

Unless otherwise recommended by the paint manufacturer, the ambient temperature shall be between 45 and 95 degrees F when applying coatings other than water-thinned, epoxy, and moisture-curing polyurethane coatings. Water-thinned coatings shall be applied only when ambient temperature is between 50 and 90 degrees F. Epoxy, and moisture-curing polyurethane coatings shall be applied only within the minimum and maximum temperatures recommended by the coating manufacturer. Moisture-curing polyurethane shall not be applied when the relative humidity is below 30 percent.

PART 2 PRODUCTS

2.1 PAINT

The term "paint" as used herein includes emulsions, enamels, paints, stains, varnishes, sealers, cement-emulsion filler, and other coatings, whether used as prime, intermediate, or finish coat. Paint shall conform to the respective specifications listed for use in the painting schedules at the end of this section, except when the required amount of a material of a particular color is 50 gallons or less, an approved proprietary paint material may be used. The proprietary paint material shall be of the same type, color, and be equivalent in performance of the type specified in the painting schedules. Equivalent performance shall be within 10 percent of the values for the percent of pigment, the percent of solid content (percent of pigment by weight and the percent of nonvolatile vehicle by weight), the viscosity (in K.U.'s), the gloss, and the drying times for set-to-touch, recoating, and dry hard. Additional requirements are as follows:

2.1.1 Colors and Tints

Colors shall be as selected from manufacturer's standard colors, as indicated. Manufacturer's standard color is for identification of color only. Tinting of epoxy, and urethane, paints shall be done by the manufacturer. The color of the undercoats shall vary slightly from the color of the next coat.

2.1.2 Lead

Paints containing lead in excess of 0.06 percent by weight of the total nonvolatile content (calculated as lead metal) shall not be used.

2.1.3 Chromium

Paints containing zinc chromate or strontium chromate pigments shall not be used.

2.1.4 Volatile Organic Compound (VOC) Content

Paints shall comply with applicable state and local laws enacted to insure compliance with Federal Clean Air Standards. Materials shall

conform to the restrictions of the local air pollution control authority. When the materials specified in the painting schedule do not meet the applicable VOC content limitations, the Contractor shall notify the Contracting Officer prior to commencing the work, informing the Contracting Officer of proposed substitute materials. Substitute materials may be proprietary paint materials of the same type, color, and which are equivalent in performance of the types specified in the painting schedule and which meet the VOC content requirements. Equivalent performance shall be as defined in PART 2 paragraph "PAINT". Coatings shall have the date of manufacture clearly marked on each container.

PART 3 EXECUTION

3.1 PROTECTION OF AREAS NOT TO BE PAINTED

Items not to be painted which are in contact with or adjacent to painted surfaces shall be removed or protected prior to surface preparation and painting operations. Items removed prior to painting shall be replaced when painting is completed. Following completion of painting, workmen skilled in the trades involved shall reinstall removed items. Surfaces contaminated by coating materials shall be restored to original condition.

3.2 SURFACE PREPARATION

Surfaces to be painted shall be clean and free of foreign matter before application of paint or surface treatments. Oil and grease shall be removed with clean cloths and cleaning solvents prior to mechanical cleaning. Cleaning solvents shall be of low toxicity with a flashpoint in excess of 100 degrees F. Cleaning shall be programmed so that dust and other contaminants will not fall on wet, newly painted surfaces. Exposed ferrous metals such as nail heads on or in contact with surfaces to be painted with water-thinned paints, shall be spot-primmed with a suitable corrosion-inhibitive primer capable of preventing flash rusting and compatible with the coating specified for the adjacent areas.

3.2.1 Concrete and Masonry Surfaces

Concrete and masonry surfaces shall be allowed to dry at least 30 days before painting, except concrete slab on grade which shall be allowed to cure 90 days before painting. Glaze, efflorescence, laitance, dirt, grease, oil, asphalt, surface deposits of free iron and other foreign matter shall be removed prior to painting. Surfaces to receive polyurethane, chlorinated rubber or epoxy coatings shall be acid-etched or mechanically abraded as specified by the coating manufacturer, rinsed with water, allowed to dry, and treated with the manufacturer's recommended conditioner prior to application of the first coat.

3.2.2 Ferrous Surfaces

Ferrous surfaces including those that have been shop-coated, shall be solvent-cleaned. Surfaces that contain loose rust, loose mill scale, and other foreign substances shall be cleaned mechanically with power tools according to SSPC SP 3 or by sandblasting according to SSPC SP 7. Shop-coated ferrous surfaces shall be protected from corrosion by treating and touching up corroded areas immediately upon detection.

3.2.3 Nonferrous Metallic Surfaces

Galvanized, aluminum and aluminum-alloy, lead, copper, and other nonferrous metal surfaces shall be solvent-cleaned in accordance with SSPC SP 1.

3.2.4 Gypsum Board Surfaces

Gypsum board surfaces shall be dry and shall have all loose dirt and dust removed by brushing with a soft brush, rubbing with a dry cloth, or vacuum-cleaning prior to application of the first-coat material.

3.3 MIXING AND THINNING

When thinning is approved as necessary to suit surface, temperature, weather conditions, or application methods, paints may be thinned in accordance with the manufacturer's directions. When thinning is allowed, paints shall be thinned immediately prior to application with not more than 1 pint of suitable thinner per gallon. The use of thinner shall not relieve the Contractor from obtaining complete hiding, full film thickness, or required gloss. Thinning shall not cause the paint to exceed local limits on volatile organic compounds. Paints of different manufacturers shall not be mixed.

3.3.1 Cement-Emulsion Filler Coat

Cement and aggregate shall be dry-mixed so that uniform distribution and intermixing are obtained. Mixing liquid and one-half of the total amount of water shall be premixed and added gradually to the white portland cement and aggregate with constant stirring until a thick, smooth material is obtained. Emulsion paint shall then be added to the mixture and stirred until uniformity is obtained. The blend shall have a thick, creamy consistency. The remainder of the water shall be added if necessary to obtain a material with adequate application properties. Blending resin emulsion or emulsion paint with any other component shall be done with caution; too rapid an agitation will cause air entrapment and foaming.

3.3.2 Two-Component Systems

Two-component systems shall be mixed in accordance with manufacturer's instructions. Any thinning of the first coat to ensure proper penetration and sealing shall be as recommended by the manufacturer for each type of substrate.

3.4 APPLICATION

Painting practices shall comply with applicable state and local laws enacted to insure compliance with Federal Clean Air Standards. Unless otherwise specified or recommended by the paint manufacturer, paint may be applied by brush, roller, or spray. At the time of application, paint shall show no signs of deterioration. Uniform suspension of pigments shall be maintained during application. Each coat of paint shall be applied so dry film shall be of uniform thickness and free from runs, drops, ridges, waves, pinholes or other voids, laps, brush marks, and variations in color, texture, and finish. Hiding shall be complete. Rollers for applying paints and enamels shall be of a type designed for the coating to be applied and the surface to be coated. Special attention shall be given to insure that all edges, corners, crevices, welds, and rivets receive a film thickness equal to that of adjacent painted surfaces. Paints, except water-thinned types, shall be applied only to surfaces that are completely free of moisture as determined by sight or touch.

3.4.1 Ventilation

Adequate ventilation shall be provided during paint application. Respirators shall be worn by all persons engaged in spray painting. Adjacent inhibited areas shall be protected by approved precautionary measures.

3.4.2 First Coat

The first coat on plaster, gypsum wallboard, and other surfaces shall include repeated touching up of suction spots or overall application of primer or sealer to produce uniform color and gloss. Excess sealer shall be wiped off after each application. The first coat on both faces of wood doors shall be applied at essentially the same time. Glazed doors and sashes shall be given both coats of paint within 3 weeks of the time they are glazed, but not before the glazing material has set; paint shall

overlay glass about 70 mils all around. Each varnish coat shall be sanded lightly prior to application of subsequent coats.

3.4.3 Timing

Surfaces that have been cleaned, pretreated, and otherwise prepared for painting shall be given a coat of the specified first coat as soon as practical after such pretreatment has been completed, but prior to any deterioration of the prepared surface. Sufficient time shall elapse between successive coats to permit proper drying. This period shall be modified as necessary to suit weather conditions. Oil-based or oleoresinous solvent-type paints shall be considered dry for recoating when the paint feels firm, does not deform or feel sticky under moderate pressure of the thumb, and the application of another coat of paint does not cause the undercoat to lift or lose adhesion. Manufacturer's instructions for application, curing and drying time between coats of two-component systems shall be followed.

3.4.4 Fillers

Concrete and masonry surface voids shall be filled; however, surface irregularities need not be completely filled. The filler dry film shall be uniform and free of pinholes. Filler shall not be applied over caulking compound.

3.4.4.1 Cement-Emulsion Filler

Immediately before filler application, surfaces shall be dampened uniformly and thoroughly, with no free surface water visible, by several applications of potable water with a fog spray, allowing time between the sprayings for water to be absorbed. Cement-emulsion filler shall be scrubbed into the surface vigorously with a stiff-bristled brush having tampico or palmyra bristles not longer than 2-1/2 inches. At least 24 hours shall elapse before applying exterior emulsion paint over cement-emulsion filler. When the ambient temperature is over 85 degrees F, cement-emulsion filler surfaces shall be dampened lightly with a fog spray of potable water immediately prior to application of the subsequent paint coat.

3.4.4.2 Solvent-Thinned Filler

Solvent-thinned filler, FS TT-F-1098, shall be applied to dry surfaces only and may be applied by brush or roller. Filler shall be allowed to set for 3 to 5 minutes or until the filler becomes tacky, and the excess material shall then be removed with a rubber squeegee. Surface voids shall be filled; however, surface irregularities need not be completely filled. Surfaces to which solvent-thinned filler has been applied shall be given the specified topcoat as soon as practical but before the filler material starts to discolor or chalk.

3.4.4.3 Latex Filler

Latex filler, CID A-A-1500, shall be applied according to the manufacturer's instructions. Surface voids shall be filled and the filler allowed to dry the length of time specified by the manufacturer prior to applying successive coats of paint.

3.4.5 Primer

Primer for ferrous-metal shall be applied to ferrous surfaces to receive paint other than asphalt varnish prior to deterioration of the prepared surface. The semitransparent film applied to some pipes and tubing at the mill is not to be considered a shop coat, but shall be overcoated with the specified ferrous-metal primer prior to application of finish coats.

3.5 PIPE COLOR CODE MARKING

Pipes in exposed areas and in accessible pipe spaces shall be provided with color band and titles adjacent to all valves, except those provided at plumbing fixtures, at not more than 40-foot spacing on straight pipe runs, adjacent to change in direction, and on both sides where pipes pass through walls or floors. Color code marking shall be of the color listed in TABLE I and the size listed in TABLE II. The arrows shall be installed adjacent to each band to indicate the direction of flow in the pipe. The legends shall be printed in upper-case black letters as listed in TABLE I. Letter sizes shall be as listed in TABLE II. Marking shall be painted or applied using colored, pressure-sensitive adhesive markers of standard manufacture. Paint shall be as specified for insulated and uninsulated piping.

TABLE I. COLOR CODES FOR MARKING PIPE

Material	Pipe Color (Painted)	Band	Arrow*	Legend
Cold water (potable)	Light Blue	White	Black	POTABLE WATER
Fire protection water	Red	Red	Black	FIRE PR.WATER
Hot water (domestic)	Light Blue	White	Black	H.W.
Compressed air	Light Green	Gray	Green	COMP. AIR
Nonpotable or Raw Water	Light Blue	Red	Black	NOTPOT WATER
Service Water (lines downstream from a backflow prevention unit)	Dark Blue	White	Red	SERVICE WATER
Sewage	Light Gray	Light Gray	Black	SEWAGE
Sludge	Light Brown	White	White	SLUDGE
Scum	Dark Brown	White	White	SCUM
Drain	Dark Gray	White	White	DRAIN
Sample	Light Gray	Green	Green	SAMPLE
Sodium Hydroxide	Orange	Gray	Gray	NaOH
Sodium Bisulfite	Light Green	Yellow	Yellow	Na BISULFITE
Fuel oil		Yellow	Black	FUEL OIL

*Where black is indicated, white shall be used if necessary to provide contrast.

In addition, special painting of the following items will be required:

Item	Color
Hoist hooks and blocks	Yellow

TABLE II. COLOR CODE MARKING SIZES

Outside Diameter of Pipe Covering (Inches)	Width of Color Band (Inches)	Arrow Length x Width (Inches)	Size of Legend Letters and Numerals (Inches)
Less than 1-1/2	1	2 x 1/2	1/2
1-1/2 to 3-1/2	1	4 x 1	3/4
3-1/2 to 6	2	8 x 2	1-1/4
6 to 9	2	12 x 3	2
9 to 13	2	16 x 4	3
Over 13	6	20 x 5	3-1/2

3.6 SURFACES TO BE PAINTED

Surfaces listed in the painting schedules at the end of this section, other than those listed in paragraph SURFACES NOT TO BE PAINTED, shall be painted as scheduled.

3.7 SURFACES NOT TO BE PAINTED

Surfaces in the following areas are not to be painted:

a. Exterior sheet metalwork (except galvanized).
b. Exterior poured concrete.
c. Concrete floors.
d. Exterior and interior aluminum and stainless steel.
e. Aluminum or galvanized roofing and siding sheets.
f. Exterior calking and sealants.
g. Door and window hardware.
h. Sprinkler heads and other fire detection elements.
i. Safety nosings.
j. Labels of testing agencies such as Underwriters' Laboratories, Inc.
k. Interior and exterior signs.
l. Top of bridge crane rails.
m. Unexposed interior ferrous surfacers.
n. Aluminum or sized vapor barrier jacketing over insulated pipes in unexposed locations that do not require color coding.

In addition surfaces of hardware, fittings, and other factory finished items shall not be painted.

3.8 CLEANING

Cloths, cotton waste and other debris that might constitute a fire hazard shall be placed in closed metal containers and removed at the end of each day. Upon completion of the work, staging, scaffolding, and containers shall be removed from the site or destroyed in an approved manner. Paint and other deposits on adjacent surfaces shall be removed and the entire job left clean and acceptable.

3.9 PAINTING SCHEDULES

The following painting schedules identify the surfaces to be painted and prescribe the paint to be used and the number of coats of paint to be applied. Contractor options are indicated by _____ or _____ between optional systems or coats.

EXTERIOR PAINTING SCHEDULE

Surface	First Coat	Second Coat	Third Coat
Concrete subject to submergence in sewage or other severe atmospheric exposure, including all interior surfaces of SBRs, aerobic digester, effluent storage tank, Flood Water pump station, sludge drying beds and composting area	SSPC Paint 16 Type 1 Pitch	SSPC Paint 16 Type 1 Pitch	SSPC paint 16 Type 1 Pitch (if needed to attain 16-20 DFT total thickness and pinhole-free film)

Concrete: Chlorine contact, chamber facilities	SSPC Paint 18 (thin with 1 part approved thinner to 4 parts paint by volume)	SSPC Paint 18	SSPC Paint 18
	or		
	FS TT-P-95 Type I or II, Class 2	FS TT-P-95 Type I or II, Class 2 (thin with 1 part approved thinner to 4 parts paint by volume)	FS TT-P-95 Type I or II, Class 2

EXTERIOR PAINTING SCHEDULE

Surface	First Coat	Second Coat	Third Coat
Ferrous, unless otherwise specified.	SSPC Paint 5	FS TT-P-38	FS TT-P-38
	SSPC Paint 25	FS TT-E-489, Class A	FS TT-E-489 Class A
	FS TT-P-645	SSPC Paint 21, Type I	SSPC Paint 21 Type I
		FS TT-P-102 Type II	FS TT-P-102 Type II
		FS TT-P-31	FS TT-P-31
Ferrous: subject to submergence in sewage or other severe atmospheric exposure, as follows:	SSPC Paint 22	SSPC Paint 22	*SSPC Paint 22 *substitute FF-TT-C-542 for non-submergence
	or		
	SSPC Paint 16 Type 1 Pitch	SSPC Paint 16 Type 1 Pitch	SSPC Paint 16 Type 1 Pitch (if needed to attain 16-20 DFT total thickness and pinhole-free film)

NOTE: Near white blast cleaning, SSPC SP 10 is required.

EXTERIOR PAINTING SCHEDULE

Surface	First Coat	Second Coat	Third Coat
Galvanized	SSPC Paint 5	FS TT-P-102	FS TT-P-102
		FS TT-P-31	FS TT-P-31
	FS TT-P-19	FS TT-P-19	FS TT-P-19

INTERIOR PAINTING SCHEDULE

Surface	First Coat	Second Coat	Third Coat
Concrete masonry units, gypsum board, unless otherwise specified.	FS TT-P-29	FS TT-P-29	None
		or	
	FS TT-P-650	FS TT-P-30	None
	FS TT-P-650	FS TT-E-508[1]	None
			or
		FS TT-E-509[1]	None
			or
		FS TT-P-1511	None Type I
	FS TT-P-002119 Class 1	FS TT-P-002119 Class 1	None

NOTE: Fill concrete masonry unit surface with FS TT-F-1098 or CID A-A-1500."

INTERIOR PAINTING SCHEDULE

Surface	First Coat	Second Coat	Third Coat
Gypsum board: for walls in heavy traffic areas and areas requiring high degree of sanitation in space as follows: Rooms 100, 103, 105, 106, 107	Gypsum board FS TT-P-29	FS TT-C-535 Type II	FS TT-C-535 Type II
	FS TT-P-650	FS TT-P-650	FS TT-E-505 _____ or _____ FS TT-E-506 _____ or _____ FS TT-E-508 _____ or _____ FS TT-E-509
		FS TT-P-1511, Type I	FS TT-P-1511, Type I
		FS TT-P-002119 Class 2	FS TT-P-002119 Class 2

INTERIOR PAINTING SCHEDULE

Surface	First Coat	Second Coat	Third Coat
Ferrous: unless otherwise specified.	SSPC Paint 5	FS TT-P-30	FS TT-P-30
	SSPC Paint 25	FS TT-E-545	FS TT-E-508
	FS TT-P-645	_____	or _____
		FS TT-E-509[1]	None
		FS TT-E-505[1]	None
		_____	or _____
		FS TT-E-506[1]	None
	FS TT-P-102 Type P	FS TT-P-102 Type P	None
	FS TT-P-38	FS TT-P-38	None

INTERIOR PAINTING SCHEDULE

Surface	First Coat	Second Coat	Third Coat
Ferrous in concealed damp spaces or in exposed areas having unpainted adjacent surfaces	FS TT-V-51	None	None
	SSPC Paint 25	None	None
Ferrous: factory-primed mechanical and electrical equipment	FS TT-E-489, Class A	FS TT-E-489, Class A	None
		or	
	SSPC Paint 21, Type I	SSPC Paint 21, Type I	None
Galvanized: unless otherwise specified	SSPC Paint 5	Two coats of paint to match adjacent areas	

INTERIOR PAINTING SCHEDULE

Surface	First Coat	Second Coat	Third Coat
Metal: electrical conduit runs, metallic tubing, uninsulated ducts and pipes, pipe hangers, in areas having painted adjacent surfaces	Ferrous metal: SSPC Paint 5	FS TT-E-545	FS TT-E-506 or FS TT-E-505
	SSPC Paint 25		
	FS TT-P-645		FS TT-E-508 or FS TT-E-509
	Aluminum: FS TT-P-645		
	Galvanized surface: SSPC Paint 5	FS TT-P-29	FS TT-P-29

INTERIOR PAINTING SCHEDULE

Surface	First Coat	Second Coat	Third Coat
Oil-based caulking compound	FS TT-P-38	Same as adjacent areas	

-- o O o --

SECTION 10163

PREFABRICATED SHOWER STALLS

PART 1 GENERAL

1.1 REFERENCES

The publications listed below form a part of this specification to the extent referenced. The publications are referred to in the text by the basic designation only.

FEDERAL SPECIFICATIONS (FS)

FS RR-P-1352 (Rev. C) Partitions, Toilet, Complete

1.2 SUBMITTALS

The following shall be submitted in accordance with Section 01300 - "SUBMITTALS."

SD-02 Manufacturer's Catalog Data

Hardware.

Fittings.

Shower stall, panels.

Submit literature for each item and each type of panel, complete with descriptions of materials, finishes, fastening and anchoring devices, and appurtenances.

SD-04 Drawings

Shower stalls.

Submit shop drawings indicating elevations of partitions, full-scale sections, thicknesses and gauges of metal, fastenings, proposed method of anchoring, the size and spacing of anchors, details of construction, hardware, fittings, mountings, and other related items and installation details.

SD-13 Certificates

Toilet Partitions.

Submit certificates attesting that materials meet specified requirements.

SD-15 Samples

Toilet partition finishes color selection samples.

Submit, for each color, for verification that products match the colors indicated. Where colors are not indicated, submit the manufacturer's standard color samples for selection by the Contracting Officer.

1.3 DELIVERY AND HANDLING

Deliver materials to the site in original sealed containers or packages, bearing the manufacturer's name, brand designation, specification number, type, style, and finish as applicable. Store and handle materials in a manner to protect them from damage.

PART 2 PRODUCTS

2.1 SHOWER

2.1.1 Shower Compartment

FS RR-P-1352, Type I, Style A, floor supported. Reinforce panels to receive partition-mounted accessories.

2.1.2 Compartment

Prefabricated shower compartment complete with following components:

a. Partitions: Same material finish and color as toilet enclosure with interlocked leakproof corner assembly. Reinforce panels to receive partition-mounted accessories.

b. Receptor: Precast terrazzo with integral cast drain, and removable stainless steel strainer. Handicapped unit shall have recessed thresholds.

c. Accessories: Heavy-duty translucent vinyl curtain, integral curtain track, hooks and soap dish.

d. Grab Bars: Handicapped unit shall have stainless steel grab bars.

e. Size: 48" x 36" x 82".

2.2 FINISHES

Compartment finishes shall conform to FS RR-P-1352 and the requirements specified. Finish No. 1, baked enamel.

PART 3 EXECUTION

3.1 INSTALLATION

Secure the work to contiguous construction straight and plumb. In the finished work, conceal evidence of drilling in floors and walls. Screws and bolts shall be stainless steel.

3.2 CLEANING

After installation, thoroughly clean exposed surfaces and restore damaged work to its original condition or replace with new work.

-- End of Section --

SECTION 10430 - EXTERIOR SIGNAGE

PART 1 - GENERAL

1.1 REFERENCES

The publications listed below form a part of this specification to the extent referenced. The publications are referred to in the text by basic designation only.

ALUMINUM ASSOCIATION (AA)

AA DAF-45	(Sep 1980; 7th Ed) Designation System for Aluminum Finishes

AMERICAN NATIONAL STANDARDS INSTITUTE (ANSI)

ANSI A117.1	(1986) Providing Accessibility and Usability for Physically Handicapped People
ANSI Z97.1	(1989) Safety Glazing Materials Used in Buildings

AMERICAN SOCIETY FOR TESTING AND MATERIALS (ASTM)

ASTM A 36	(1990) Structural Steel
ASTM A 123	(1989a) Zinc (Hot-Dip Galvanized) Coatings on Iron and Steel Products
ASTM A 525	(1990) Steel Sheet, Zinc-Coated (Galvanized) by the Hot-Dip Process
ASTM A 570	(1990) Steel, Sheet and Strip, Carbon, Hot-Rolled, Structural Quality
ASTM B 26	(1991) Aluminum-Alloy Sand Castings
ASTM B 62	(1990) Composition Bronze or Ounce Metal Castings
ASTM B 108	(1991) Aluminum-Alloy Permanent Mold Castings
ASTM B 209	(1990) Aluminum and Aluminum-Alloy Sheet and Plate
ASTM B 221	(1991) Aluminum and Aluminum-Alloy Extruded Bars, Rods, Wire, Shapes, and Tubes
ASTM C 1036	(1990) Flat Glass
ASTM D 3841	(1988) Glass-Fiber-Reinforced Polyester Plastic Panels

AMERICAN WELDING SOCIETY (AWS)

AWS D1.1	(1990) Structural Welding Code - Steel

NATIONAL ASSOCIATION OF ARCHITECTURAL METAL MANUFACTURERS (NAAMM)

NAAMM AMP 505	(1988) Metal Finishes Manual for Architectural and Metal Products; Section: Applied Coatings

NATIONAL FIRE PROTECTION ASSOCIATION (NFPA)

NFPA 70	(1993) National Electrical Code

SOCIETY OF AUTOMOTIVE ENGINEERS (SAE)

SAE AMS 3611	(Jan 1964; Rev C - Jan 1986) Plastic Sheet, Polycarbonate, General Purpose

1.2 GENERAL

Exterior signage shall conform to the requirements specified herein, and shall be provided at the locations indicated. Signs shall be complete with lettering, framing as detailed, and related components for a complete installation. Materials and equipment shall be the standard product of a manufacturer regularly engaged in the manufacture of the products. Items of equipment shall essentially duplicate equipment that has been in satisfactory use at least 2 years prior to bid opening. Exterior warning signs shall be bilingual.

1.3 SUBMITTALS

The following shall be submitted in accordance with Section 01300 - SUBMITTALS:

SD-04 Drawings

Exterior signs.

Drawings including elevations of each type of sign; dimensions, details, and methods of mounting or anchoring; shape and thickness of materials; and details of construction. A schedule showing the location of each sign type shall be included.

SD-06 Instructions

Exterior Signs.

Manufacturer's descriptive data, catalog cuts, and installation instructions.

SD-14 Samples

Exterior Signs.

One sample of each type of sign. Each sample shall consist of a complete sign panel with letters and symbols. Samples may be installed in the work, provided each sample is identified and location recorded. Two samples of manufacturer's standard color chips for each material requiring color selection.

1.4 DELIVERY AND STORAGE

Materials shall be wrapped for shipment and storage, delivered to the jobsite in manufacturer's original packaging, and stored in a clean, dry area.

PART 2 - PRODUCTS

2.1 SITE SIGNS

2.1.1 Panel: 16 gauge minimum galvanized steel or 0.120 inch minimum thickness 6061-T6 aluminum alloy; edges smoothed; 3 inch radius corners.

2.1.2 Color: Standard "Manual of Uniform Traffic Control Devices" signs if applicable, otherwise black lettering on white background signs of same quality as standard signs.

2.1.3 Posts: 3 pounds per foot galvanized square tube steel post with 2.5 foot bury, 4 foot plus or minus to bottom of sign, unless otherwise noted. Posts shall be set plumb in a concrete base. Holes for concrete bases shall not be less than 12 inches in diameter and 3 feet deep. Concrete shall have a minimum compressive strength of 2000 psi at 28 days and shall be thoroughly consolidated around each post so as to be free of voids and finished to form a dome. Concrete shall be allowed to cure for 72 hours prior to attachment of any items to the posts.

2.1.4 Hardware: Galvanized, cadmium plated or stainless steel bolts, nuts and washers; 0.75 inch outside diameter washer on face side of signs.

2.2 SAFETY SIGNS

2.2.1 Linear polyethylene plastic, minimum 0.055 inches thickness, clear liquid plastic ultraviolet inhibitor coating.

2.2.2 Attachments, as appropriate

2.2.2.1 Adhesive

2.2.2.2 Flat head screws

2.2.3 Standard safety signs typically 12-inches x 10-inches

2.2.4 Wording may vary slightly from that shown in schedule to accommodate manufacturer's standard message.

2.3 ENGRAVED LAMINATED PLASTIC SIGNS FOR EXTERIOR USE

2.3.1 Core color contrasting to exterior face color, red face with white lettering unless otherwise scheduled.

2.3.2 Total thickness: 0.125 inches

2.3.3 Clear liquid plastic ultraviolet inhibitor coating

2.3.4 Attachment, as appropriate:

2.3.4.1 Adhesive

2.3.4.2 Countersunk wood screws

2.3.4.3 Hung from two stainless steel or galvanized chains from handrails, pipes, and similar features where suitable mounting surface does not exist

2.3.5 Block style lettering, all capitals, 1-inch high lettering

2.3.6 Signs uniformly sized for similar functions

2.4 SHOP FABRICATION AND MANUFACTURE

2.4.1 Workmanship

Work shall be assembled in the shop, insofar as practicable, ready for installation at the site. Work that cannot be shop assembled shall be given a trial fit in the shop to ensure proper field assembly. Holes for bolts and screws shall be drilled or punched. Drilling and punching shall produce clean, true lines and surfaces. Weld to or on structural steel in accordance with AWS D1.1. Welding shall be continuous along the entire area of contact. Exposed welds shall be ground smooth. Exposed surfaces of work shall have a smooth finish and exposed riveting shall be flush. Fastenings shall be concealed where practicable. Items specified to be galvanized shall be by hot-dip process after fabrication if practicable. Galvanization shall be in accordance with ASTM A 123 and ASTM A 525, as applicable. Joints exposed to the weather shall be formed to exclude water. Drainage and weep holes shall be included as required to prevent condensation buildup.

2.4.2 Dissimilar Materials

Where dissimilar metals are in contact, or where aluminum is in contact with concrete, mortar, masonry, wet or pressure-treated wood, or absorptive materials subject to wetting, the surfaces shall be protected with a coat of asphalt varnish or a coat of zinc-chromate primer to prevent galvanic or corrosive action.

2.4.3 Shop Painting

Surfaces of miscellaneous metal work, except nonferrous metal, corrosion resisting steel, and zinc-coated work, shall be given one coat of zinc-chromate primer, or an approved rust-resisting treatment and metallic primer in accordance with manufacturer's standard practice. Do not paint surfaces of items to be embedded in concrete. Upon completion of work, thoroughly recoat all damaged surfaces.

PART 3 - EXECUTION

3.1 INSTALLATION

Signs shall be installed at locations directed by Contracting Officer. All signs shall be installed plumb and true. Signs mounted on other surfaces shall not be installed until finishes on such surfaces have been completed. Clean, polish, and remove excess adhesive.

3.2 SCHEDULE OF EXTERIOR SIGNS

3.2.1 Plant Site Signs (all post-mounted, sizes are approximate)

3.2.1.1 SPEED LIMIT 15 MPH, 18-inches X 24-inches, 4 required

3.2.1.2 VISITORS REPORT TO CONTROL BUILDING, 24-inches X 18-inches

3.2.1.3 CANNON AIR FORCE BASE, WASTEWATER TREATMENT FACILITIES, 54-inches X 36-inches

3.2.1.4 AUTHORIZED PERSONNEL ONLY, 24-inches X 18-inches, 4 required

3.2.1.5 VISITOR PARKING

3.2.1.6 EMPLOYEE PARKING

3.2.1.7 STOP SIGN, Standard Size

3.2.2 Exterior Safety and Warning Signs - post mounted (PM) where indicated

3.2.2.1 Influent Pump Station

a. DANGEROUS GASES IN WET WELL - DO NOT ENTER, PM

3.2.2.2 Entrance Works

a. CAUTION - THIS EQUIPMENT STARTS AUTOMATICALLY
b. CAUTION - SLIPPERY WHEN WET, 4 required
c. DANGER - WASHWATER, DO NOT DRINK, 5 required

3.2.2.3 Blower Building

a. WARNING - HIGH NOISE AREA, 3 required

3.2.2.4 Sequencing Batch Reactor

a. DANGER - WASHWATER, DO NOT DRINK, 10 REQUIRED
b. CAUTION - THESE BASINS ARE OVER 15 FEET DEEP
c. CAUTION - THIS EQUIPMENT STARTS AUTOMATICALLY, 10 REQUIRED

3.2.2.5 Plant Site

a. DANGER - HIGH VOLTAGE, 24-inch x 12-inch, 3 required, PM

3.2.2.6 Sludge Drying Beds

a. DANGER - WASHWATER, DO NOT DRINK, 5 required, PM

3.2.2.7 Chlorine Contact Basin

a. DANGER - WASHWATER, DO NOT DRINK, 2 required, 1 PM

3.2.2.8 Effluent Storage Tank

a. DANGER - WASHWATER, DO NOT DRINK, PM

3.2.2.9 Engine Generator

a. CAUTION - THIS EQUIPMENT STARTS AUTOMATICALLY, 2 required, PM

3.2.2.10 Chlorination/Dechlorination Building

a. WARNING - VERIFY FAN IS ON BEFORE ENTERING, 2 required

3.2.2.11 Influent Sewer MH5

a. CAUTION - CHLORINE INJECTION POINT - CHLORINE VAPORS MAY EXIST, PM

3.2.3 Exterior Identification Signs for Structures - Post Mounted (PM) where Indicated

3.2.3.1 CONTROL BUILDING, 2 PM

3.2.3.2 INFLUENT PUMP STATION, PM

3.2.3.3 ENTRANCE WORKS

3.2.3.4 ELECTRICAL ROOM, 2 required

3.2.3.5 SBR Basin No. 1, 2 required

3.2.3.6 SBR Basin No. 2, 2 required

3.2.3.7 DIESEL STORAGE TANK, 2 required, PM

3.2.3.8 BLOWER BUILDING, 2 required

3.2.3.9 AEROBIC DIGESTER, 2 required

3.2.3.10 CHLORINE CONTACT BASIN, 3 required

3.2.3.11 CHLORINATION/DECHLORINATION BUILDING, 2 required

3.2.3.12 WASHWATER PUMP ROOM, 2 required

3.2.3.13 SLUDGE DRYING BED NO. 1, PM

3.2.3.14 SLUDGE DRYING BED NO. 2, PM

3.2.3.15 SLUDGE DRYING BED NO. 3, PM

3.2.3.16 SLUDGE DRYING BED NO. 4, PM

3.2.3.17 SLUDGE DRYING BED NO. 5, PM

3.2.3.18 SLUDGE DRYING BED NO. 6, PM

3.2.3.19 SLUDGE DRYING BED NO. 7, PM

3.2.3.20 SLUDGE DRYING BED NO. 8, PM

3.2.3.21 SLUDGE DRYING BED NO. 9, PM

3.2.3.22 SLUDGE DRYING BED NO. 10, PM

3.2.3.23 EFFLUENT STORAGE TANK, PM

3.2.3.24 ENGINE GENERATOR, 2 required, PM

3.2.3.25 SLUDGE COMPOSTING AREA, PM

3.2.4 Exterior Identification Signs

3.2.4.1 Blower Building

a. ELECTRICAL EQUIPMENT, 2 required
b. PROCESS AIR SUPPLY TO SBR BASINS
c. PROCESS AIR SUPPLY TO AEROBIC DIGESTER

3.2.4.2 Aerobic Digester

a. DECANT DRAWOFF TO PLANT DRAIN
b. DECANT CONTROL VALVE
c. DIGESTED SLUDGE PUMP
d. FLOATING DECANTER
e. PROCESS AIR SUPPLY
f. TANK OVERFLOW TO PLANT DRAIN
g. SLUDGE FEED FROM SBR BASINS
h. SLUDGE FLOW METER
i. COARSE BUBBLE DIFFUSER ASSEMBLY, 2 required
j. DIGESTED SLUDGE TO SLUDGE DRYING BEDS

3.2.4.3 SBR Basin No. 1

a. DECANT DRAWOFF TO CHLORINE CONTACT BASIN
b. SLUDGE TRANSFER TO AEROBIC DIGESTER
c. SLUDGE TRANSFER PUMP
d. FLOATING DECANTER
e. PROCESS AIR SUPPLY
f. TANK OVERFLOW TO PLANT DRAIN
g. WASTEWATER INFLUENT
h. WASTEWATER INFLUENT MOTORIZED CONTROL VALVE
i. COARSE BUBBLE DIFFUSER ASSEMBLY, 7 required
j. DECANTER MOTORIZED CONTROL VALVE

3.2.4.4 SBR Basin No. 2

a. DECANT DRAWOFF TO CHLORINE CONTACT BASIN
b. SLUDGE TRANSFER TO AEROBIC DIGESTER
c. SLUDGE TRANSFER PUMP
d. FLOATING DECANTER
e. PROCESS AIR SUPPLY
f. TANK OVERFLOW TO PLANT DRAIN
g. WASTEWATER INFLUENT
h. WASTEWATER INFLUENT MOTORIZED CONTROL VALVE
i. COARSE BUBBLE DIFFUSER ASSEMBLY, 7 required
j. DECANTER MOTORIZED CONTROL VALVE
k. CHLORINATION INJECTION POINT

3.2.4.5 Chlorine Contact Basin

a. INFLUENT FROM SBR BASINS
b. CHLORINATION MIXER
c. DECHLORINATION MIXER
d. BASIN DRAINS, 2 required
e. SCUM DRAIN
f. EFFLUENT SUPPLY TO EFFLUENT STORAGE TANK
g. OVERFLOW FROM EFFLUENT STORAGE TANK
h. PLANT EFFLUENT TO PLAYA LAKE
i. PIPE SKIMMER ASSEMBLY
j. DECHLORINATION INJECTION POINT

- - o 0 o - -

SECTION 10440

INTERIOR SIGNAGE

PART 1 GENERAL

1.1 REFERENCES

The publications listed below form a part of this specification to the extent referenced. The publications are referred to in the text by basic designation only.

AMERICAN NATIONAL STANDARDS INSTITUTE (ANSI)

ANSI Z97.1	(1984) Safety Glazing Materials Used in Buildings

FEDERAL SPECIFICATIONS (FS)

FS L-P-387	(Rev A; Am 1; Int Am 2) Plastic Sheet, Laminated, Thermosetting (for Designation Plates)

FEDERAL STANDARDS (FED-STD)

FED-STD 795	(Basic) Uniform Federal Accessibility Standards

MILITARY SPECIFICATIONS (MS)

MS MIL-M-43719	(Rev B; Am 1) Marking Materials and Markers, Adhesive, Elastomeric, Pigmented

NATIONAL FIRE PROTECTION ASSOCIATION (NFPA)

NFPA 70	(1993) National Electrical Code

1.2 GENERAL

Interior signage shall be of the sizes and types shown on the drawings, shall conform to the requirements specified herein, and shall be provided at the locations indicated. Signs shall be complete with lettering, framing as detailed, and related components for a complete installation. Signs shall be the standard product of a manufacturer regularly engaged in the manufacture of such products and shall essentially duplicate signs that have been in satisfactory use at least 2 years prior to bid opening.

1.3 SUBMITTALS

The following shall be submitted in accordance with Section 01300 SUBMITTAL DESCRIPTIONS:

SD-01 Data

Interior Signage.

Manufacturer's descriptive data, catalogs cuts and installation instructions.

SD-04 Drawings

Interior Signage.

Drawings shall include elevations of each type of sign and shall show dimensions, details and methods of mounting or anchoring, shape and thickness of materials, and details of construction. A schedule showing the location of each sign type shall be included.

SD-14 Samples

Interior Signage.

Samples of the following signs showing typical quality and workmanship. The samples may be installed in the work, provided each sample is identified and location recorded.

a. Direction sign.

b. Door sign.

Two samples of manufacturer's standard color chips for each material requiring color selection.

1.4 DELIVERY AND STORAGE

Materials shall be delivered to the job site in manufacturer's original packaging and stored in a clean, dry area.

PART 2 PRODUCTS

2.1 VINYL SHEETING FOR GRAPHICS

Vinyl sheeting for graphics shall conform to MS MIL-M-43719, minimum 0.08 mm (0.003 inch) film thickness. Film shall include a precoated pressure sensitive adhesive backing (Class 3).

2.2 ACRYLIC SHEET

Acrylic sheet for panels and components shall conform to ANSI Z97.1.

2.3 PLAQUE SIGNS

Plaque signs shall be a modular type signage system. Signs shall be fabricated of Type ES melamine plastic conforming to FS L-P-387, Type NDP self-extinguishing or acrylic conforming to ANSI Z97.1 as shown.

2.3.1 Standard Modular Plaque Signs

Plaque signs shall consist of matte finish acrylic plastic, laminated to acrylic or plexiglass back, thickness and size as shown. Corners of signs shall be squared.

2.3.2 Mounting of Plaque Signs

Surface mounted signs shall be provided with 1.6 mm (1/16 inch) thick vinyl foam tape. Sign inserts shall be provided with 1.6 mm (1/16 inch) thick foam tape.

2.4 GRAPHICS

2.4.1 Tactile Graphics

Signage that provides emergency information, general circulation directions, or identification of rooms and spaces shall be tactile (perceptible to touch) and shall comply with FED-STD 795, paragraph 4.30. Characters, symbols, or pictographs on tactile signs shall be recessed or raised 0.8 mm (1/32 inch) minimum. Tactile letters and numbers shall be sans serif upper case. Tactile characters or symbols shall be at least 15 mm (5/8 inch) high, but no higher than a nominal 50 mm. (2 inches.) Characters and symbols shall contrast with their background.

2.4.2 Graphics Application

Signage graphics shall conform to the following:

a. Pressure sensitive precision cut vinyl letters shall be provided.

b. Message shall be acrylic letters 3 mm (1/8 inch) thick and chemically welded to 3.17 mm (0.125 inch) thick acrylic backup sheet.

2.4.3 Messages

See schedule for message content, typeface, type size and color.

PART 3 EXECUTION

3.1 INSTALLATION

Signs shall be installed at locations shown on schedule. Signs shall be installed plumb and true at mounting heights indicated, and by method shown or specified. Signs on doors or other surfaces shall not be installed until finishes on such surfaces have been installed.

3.1.1 Protection and Cleaning

The work shall be protected against damage during construction. Hardware shall be adjusted for proper operation. Glass, frames, and other sign surfaces shall be cleaned.

3.2 ENGRAVED LAMINATED PLASTIC SIGNS FOR INTERIOR USE

Core color contrasting to exterior face color, red face with white lettering unless otherwise scheduled. Total thickness shall be 0/125 inches. Block style lettering, all capitals, 1 inch high lettering shall be used. Signs shall be uniformly sized for similar functions.

3.3 SAFETY SIGNS

Safety signs shall be linear polyethylene plastic, minimum 0.055 inches thickness, clear liquid plastic ultraviolet inhibitor coating. Standard safety signs shall be typically 12 inches x 10 inches. Wording may vary slightly from that shown in schedule to accommodate manufacturer's standard message.

3.4 SCHEDULE OF INTERIOR SIGNS

3.4.1 Interior Safety and Warning Signs

3.4.1.1 Blower Building

a. WARNING - THIS EQUIPMENT STARTS AUTOMATICALLY, 6 required.

b. DANGER - HIGH VOLTAGE, 3 required.

c. EXIT, 4 required.

3.4.1.2 Chlorination/Dechlorination Building

a. CAUTION - THIS EQUIPMENT STARTS AUTOMATICALLY, 5 required.

b. EXIT, 2 required.

3.4.2 Interior Identification Signs

3.4.2.1 Blower Building

a. NORTH SBR BASIN BLOWER

b. SOUTH SBR BASIN BLOWER

c. CENTER SBR BASIN BLOWER

d. NORTH DIGESTER BLOWER

e. SOUTH DIGESTER BLOWER

f. NORTH WASHWATER PUMP

g. SOUTH WASHWATER PUMP

h. BASKET STRAINER

i. PRESSURE TANK

j. FLOW SWITCH

k. PRESSURE SWITCH

l. WASHWATER SUPPLY TO PLANT WASHWATER SYSTEM

3.4.2.2 Chlorination/Dechlorination Building

a. BACKFLOW PREVENTER

b. DECHLORINATION PUMP, 2 required

c. PULSATION DAMPENER, 3 required

d. EAST CHLORINATION PUMP

e. CENTER CHLORINATION PUMP

f. WEST CHLORINATION PUMP

g. CHLORINATION SUPPLY TO DISCHARGE FROM SBR BASINS

h. CHLORINATION SUPPLY TO INFLUENT SEWER MANHOLE NO. 5

i. DECHLORINATION SUPPLY TO CHLORINE CONTACT BASIN

j. CHLORINATION STORAGE TANK

k. FLOW METER, 6 required

3.4.2.3 Administration Building

a. HOT WATER, 3 required

b. COLD WATER, 3 required

c. BACKFLOW PREVENTER

3.4.3 Room Signs for Interior Doors

Install on walls 1 inch from door frame and 5 feet 4 inches from floor to sign centerline.

3.4.3.1 Blower Building

a. ELECTRICAL EQUIPMENT AND MOTOR CONTROL CENTER ROOM

b. WASHWATER ROOM

3.4.3.2 Administration Building

a. RESTROOM (HANDICAP SYMBOL WITH UNISEX DESIGNATION)

b. STORAGE

c. LABORATORY

d. OFFICE

e. LOCKER ROOM (HANDICAP SYMBOL WITH UNISEX DESIGNATION)

f. SHOWER (HANDICAP SYMBOL WITH UNISEX DESIGNATION)

-- o O o --

SECTION 10505

METAL LOCKERS

PART 1 GENERAL

1.1 REFERENCES

The publications listed below form a part of this specification to the extent referenced. The publications are referred to in the text by basic designation only.

AMERICAN SOCIETY FOR TESTING AND MATERIALS

ASTM A446	Steel Sheet, Zinc-coated (Galvanized) by the Hot-Dip Process, Structural (Physical) Quality.

1.2 DESCRIPTION

Lockers: Standard, double-tier lockers; on concrete base; padlock hasps.

1.3 SUBMITTALS

The following shall be submitted in accordance with SECTION: 01305, SUBMITTAL PROCEDURES:

SD-04 Drawings

Lockers.

Drawings shall show plans, elevations, details of construction, hardware, reinforcing, fittings, mountings, and anchorings.

SD-14 Samples

Lockers.

Manufacturer's standard color charts and color samples.

PART 2 PRODUCTS

2.1 MATERIALS

Sheet steel shall be ASTM A446; structural quality steel; of the following minimum thicknesses:

a. Body and Shelf: 20-gage.

b. Doors: 16-gage.

c. Door Frames: 16-gage.

d. Hinges: 14-gage.

e. Base, Top, Trim: 24-gage.

2.2 ACCESSORIES

Provide each locker with two single-prong wall hooks, metal number plate, rubber bumper.

2.3 FABRICATION

Locker units shall be 15 inches x 15 inches deep x 72 inches high overall size; single tier. Bodies shall be formed and flanged with stiffener ribs; electrically spot welded. Door frame shall be formed channel shape, welded and ground flush, welded to body. Doors shall by welded inner and outer faces; 30 mm thickness; channel reinforced top and bottom with intermediate stiffener ribs. Finish edges smooth. Provide two hinges, welded securely

to unit body and rivet to unit door. Provide locking handle for padlock. Provide filler panels tops to close off all openings. Provide ventilation openings at top and bottom of each door. Finish edges smooth without burrs. Provide number plates.

2.4 FINISHES

Clean, degrease, and neutralize metal; prime and finish with two coats of baked enamel. Paint locker doors and bodies in colors as selected. Locker door and body of one color throughout. Color shall be as shown on Schedule.

PART 3 EXECUTION

3.1 PREPARATION

Verify bases and recesses are properly sized and located.

3.2 INSTALLATION

Install lockers secure, plumb, square, and in line. Anchor lockers with appropriate anchor devices to suit materials encountered. Bolt adjoining locker units together to provide rigid installation. Install filler panels to completely close off openings.

-- o O o --

SECTION 10522

FIRE EXTINGUISHERS AND CABINETS

PART 1 GENERAL

1.1 REFERENCES

The publications listed below form a part of this specification to the extent referenced. The publications are referred to in the text by basic designation only.

NATIONAL FIRE PROTECTION ASSOCIATION (NFPA)

NFPA 10 Portable Fire Extinguishers

1.2 SUBMITTALS

The following shall be submitted in accordance with Section 01300 - SUBMITTALS:

SD-01 Data

Manufacturer's descriptive data for materials and installation.

1.3 DELIVERY AND STORAGE

Package, handle, deliver, and store at job site to avoid damage. Damaged equipment will be rejected.

PART 2 PRODUCTS

2.1 FIRE EXTINGUISHERS

UL rating: 20A-120B:C; NFPA 10, complete with mounting brackets for wall installation or in cabinets.

2.2 FIRE EXTINGUISHER CABINETS

Semi-recessed flanged tub with oversized door completely covering the flange, with concealed hinge and handle. Tub shall be constructed of white epoxy-coated rolled steel. Door shall be white epoxy-coated cold-rolled steel, complete with roller catches. Install in control building laboratory and blower building.

2.2.1 Cabinet Dimensions

Sized to suit fire extinguisher.

2.2.2 Door Style

Contemporary, narrow clear wire glass.

2.2.3 Finish

White epoxy coated.

PART 3 EXECUTION

3.1 INSTALLATION

Install in locations and at mounting heights indicated. Prepare recesses in walls to comply with manufacturer's instructions. Securely fasten cabinets to structure, square and plumb. Check extinguishers for proper charge and operation.

-- o O o --

SECTION 10800

TOILET ACCESSORIES

PART 1 GENERAL

1.1 REFERENCES

The publications listed below form a part of this specification to the extent referenced. The publications are referred to in the text by basic designation only.

COMMERCIAL ITEM DESCRIPTIONS (CID)

CID A-A-2380	(Basic) Dispenser, Paper Towel

FEDERAL SPECIFICATIONS (FS)

FS DD-M-411	(Rev C) Mirrors, Glass
FS WW-P-541/GEN	(Rev E; Am 1) Plumbing Fixtures
FS WW-P-541/8	(Rev B; Am 1) Plumbing Fixtures (Accessories, Land Use)

1.2 SUBMITTALS

The following shall be submitted in accordance with Section 01300 SUBMITTAL DESCRIPTIONS:

SD-01 Data

Finishes. Accessory Items.

Manufacturer's descriptive data and catalog cuts indicating materials of construction, fasteners proposed for use for each type of wall construction, mounting instructions, and operation instructions.

SD-14 Samples

Finishes. Accessory Items.

One sample of each accessory proposed for use. Approved samples may be incorporated into the finished work, provided they are identified and their locations noted.

1.3 DELIVERY, STORAGE, AND HANDLING

Toilet accessories shall be wrapped for shipment and storage, delivered to the jobsite in manufacturer's original packaging and stored in a clean, dry area protected from construction damage and vandalism.

PART 2 PRODUCTS

2.1 MANUFACTURED UNITS

Toilet accessories shall be provided where indicated in accordance with paragraph SCHEDULE. Each accessory item shall be complete with the necessary mounting plates, shall be of sturdy construction with corrosion resistant surface.

2.1.1 Anchors and Fasteners

Anchors and fasteners shall be capable of developing a restraining force commensurate with the strength of the accessory to be mounted and shall be suited for use with the supporting construction. Exposed fasteners shall have oval heads and shall be finished to match the accessory.

2.1.2 Finishes

Finishes on metal shall be provided as follows:

Metal	Finish
Stainless steel	No. 4 satin finish

2.2 ACCESSORY ITEMS

Accessory items shall conform to the requirements specified below.

2.2.1 Grab Bar (GB)

Grab bar shall conform to FS WW-P-541/GEN and FS WW-P-541/8, Type IV, Class 2, 32 mm (1-1/4 inches) OD stainless steel. Grab bar shall be form and length as indicated. Concealed mounting flange shall have set screw mounting holes concealed on the lip of the flange. Grab bar shall have a smooth finish. Installed bars shall be capable of withstanding a 2.225 kN (500 pound) vertical load without coming loose from the fastenings and without obvious permanent deformation.

2.2.2 Mirror, Tilt (MT)

Tilt mirror shall conform to FS DD-M-411, Class 2, Style E (Type 304 stainless steel) surface mounted and shall provide full visibility for person in a wheelchair. Mirror shall have fixed tilt, extending at least 100 mm (4 inches) from the wall at the top and tapering to 25 mm (1 inch) at the bottom. Size shall be in accordance with paragraph SCHEDULE.

2.2.3 Paper Towel Dispenser (PTD)

Paper towel dispenser shall conform to CID A-A-2380, Type I, shall be constructed of not less than 0.683 mm (0.269 inch) Type 304 stainless steel, and shall be surface mounted. Dispenser shall have a towel compartment and a liquid soap dispenser. Locking mechanism shall be tumbler key lock.

2.2.4 Sanitary Napkin and Tampon Disposer (SND)

Sanitary napkin and tampon disposal shall be constructed of Type 304 stainless steel disposable liner type and shall conform to FS WW-P-541/GEN and FS WW-P-541/8, Type I, Class 1, Style P (wall-mounted). Fifty disposable liners of the type standard with the manufacturer shall be provided.

2.2.5 Towel Pin (TP)

Towel pin shall have concealed wall fastenings, and a pin integral with or permanently fastened to wall flange. Maximum projection shall be 100 mm (4 inches). Design shall be consistent with design of other accessory items.

2.2.6 Toilet Tissue Dispenser (TTD)

Toilet tissue holder shall be Type II - surface mounted with two rolls of tissue mounted horizontally. Cabinet shall be stainless steel, satin finish.

2.2.7 Waste Receptacle (WR)

Waste receptacle shall conform to FS WW-P-541/GEN and FS WW-P-541/8, Type II, Type 304 stainless steel, designed for surface mounting. Reuseable liner, of the type standard with the receptacle manufacturer, shall be provided. Capacity shall be not less than 0.02 cubic meters. (0.8. cubic feet.)

PART 3 EXECUTION

3.1 INSTALLATION

Toilet accessories shall be securely fastened to the supporting construction in accordance with the manufacturer's approved instructions. Accessories shall be protected from damage from the time of installation until acceptance.

3.2 SCHEDULE

Room or Space	Accessories Required						
	GB	MT	PTD	SND	TP	TTD	WR
105		1					
106					2		
107	2	1	1	1		1	1

-- o O o --

SECTION 11211 - PUMPS: WATER, CENTRIFUGAL

PART 1 - GENERAL

1.1 REFERENCES

The publications listed below form a part of this specification to the extent referenced. The publications are referred to in the text by basic designation only.

AMERICAN SOCIETY FOR TESTING AND MATERIALS (ASTM)

ASTM A 307	(1990) Carbon Steel Bolts and Studs, 60,000 PSI Tensile Strength

AMERICAN SOCIETY OF MECHANICAL ENGINEERS (ASME)

ASME B1.1	(1989; B1.1a-1984) Unified Inch Screw Threads (UN and UNR Thread Form)
ASME B16.1	(1989) Cast Iron Pipe Flanges and Flanged Fittings
ASME B16.5	(1988; Errata Oct 1988) Pipe Flanges and Flanged Fittings
ASME B40.1	(1991) Gauges - Pressure Indicating Dial Type - Elastic Element

FEDERAL SPECIFICATION (FS)

FS TT-E-489	(Rev H) Enamel, Alkyd, Gloss, Low Voc Content

HYDRAULIC INSTITUTE (HI)

HI-01	(1983; 14th Ed) Standards for Centrifugal, Rotary & Reciprocating Pumps

NATIONAL ELECTRICAL MANUFACTURERS ASSOCIATION (NEMA)

NEMA MG 1	(1987; Rev 1) Motors and Generators

NATIONAL FIRE PROTECTION ASSOCIATION (NFPA)

NFPA 70	(1993) National Electric Code

1.2 GENERAL REQUIREMENTS

1.2.1 Standard Products

Material and equipment shall be the standard products of a manufacturer regularly engaged in the manufacture of such products and shall essentially duplicate equipment that has been in satisfactory waterworks operation at least 2 years prior to bid opening. Equipment shall be supported by a service organization that is, in the opinion of the Contracting Officer,

reasonably convenient to the jobsite. Pumps and motors of the same types shall each be the product of one manufacturer.

1.2.2 Description

The pumps shall be horizontal centrifugal water pumps of the types specified.

1.2.3 Safety Requirements

Gears, couplings, projecting set-screws, keys, and other rotating parts, so located that any person can come in close proximity thereto, shall be fully enclosed or properly guarded.

1.2.4 Nameplates

Pumps and motors shall have a standard nameplate securely affixed in a conspicuous place showing the manufacturer's name, address, type or style, model, serial number, and catalog number. In addition, the nameplate for each pump shall show the capacity in gpm at rated speed in rpm and head in feet of water. Nameplate for each electric motor shall show at least the minimum information required by 10.38 NEMA MG 1. Such other information as the manufacturer may consider necessary to complete identification shall be shown on the nameplate.

1.2.5 Electrical Work

Electrical motor driven equipment specified herein shall be provided complete with motors, motor starters, and controls. Electric equipment and wiring shall be in accordance with Section 16415 ELECTRICAL WORK, INTERIOR. Electrical characteristics shall be as indicated. Motor starters shall be provided complete with properly sized thermal overload protection in each phase and other appurtenances necessary for the motor control specified. Each motor shall be of sufficient capacity to drive the equipment at the specified capacity without exceeding the nameplate rating of the motor when operating at proper electrical system voltage and frequency. Manual or automatic control and protective or signal devices required for the operation herein specified and any control wiring required for controls and devices but not shown on electrical plans shall be provided under this section of the specifications.

1.2.6 Selection Criteria

Pumps shall be designed using hydraulic criteria based upon actual model developmental test data. Pumps shall be selected at a point within the maximum efficiency for a given impeller casing combination. Deviations within 3 percent of maximum efficiency are permissible, provided the lesser efficiency is not less than the scheduled efficiency. Pumps having impeller diameters larger than 90 percent of the published maximum diameter of the casing or less than 15 percent larger than the published minimum diameter of the casing will be rejected. Acceptable maximum impeller diameter calculations shall not be based on percentage of impeller diameter range for a given casing.

1.2.7 Conformance With Agency Requirements

Where materials or equipment are specified to be an approved type, the seal or label of approval from a nationally recognized testing agency, adequately equipped and competent to perform such services, shall be attached thereto. A written certificate from the testing agency shall accompany the materials or equipment and shall be submitted to the Contracting Officer stating that the items have been tested and that they conform to the applicable

requirements of the specifications and to the standards listed herein. The certificate shall indicate the methods of testing used by the testing agency. In lieu of a certificate from a testing agency, published catalog specification data, accompanied by the manufacturer's certified statement to the effect that the items are in accordance with the applicable requirements of the specifications and the referenced standards, will be considered by the Contracting Officer and may be acceptable as evidence that the items conform with agency requirements.

1.2.8 Verification of Dimensions

The Contractor shall become familiar with all details of the work, verify all dimensions in the field and shall advise the Contracting Officer of any discrepancy before performing the work.

1.2.9 Factory Tests

Pumps shall be tested by the manufacturer or a nationally recognized testing agency in compliance with Hydraulic Institute Standards. Where two or more identical pumps are specified, only one representative pump shall be tested. Certified test results shall be submitted to the Contracting Officer.

1.3 SUBMITTALS

The following shall be submitted in accordance with Section 01300 - SUBMITTALS:

SD-01 Data

Materials and Equipment.

Manufacturer's descriptive data and technical literature, performance charts and curves for all impeller sizes for a given casing, catalog cuts, and installation instructions. Spare parts data for each different item of material and equipment specified, after approval of the detail drawings and not later than 2 months prior to the date of beneficial occupancy. Data shall include a complete list of parts and supplies, with current unit prices and source of supply.

SD-04 Drawings

Centrifugal Pump System.

A complete listing of equipment and materials. Drawings containing complete wiring and schematic diagrams and any other details required to demonstrate that the system has been coordinated and will properly function as a unit. Drawings shall show proposed layout and anchorage of equipment and appurtenances, and equipment relationship to other parts of the work including clearances for maintenance and operation.

SD-06 Instructions

Centrifugal Pump System.

Proposed diagrams, instructions, and other sheets, prior to posting. Approved wiring and control diagrams showing the complete layout of the entire system, including equipment , piping valves, and control sequence, framed under glass or in approved laminated plastic, shall be posted where directed. Condensed operating instructions explaining preventive maintenance procedures, methods of checking the system for normal safe operation, and procedures for safely starting and stopping the system shall be prepared in typed form, framed as specified above for the wiring and

control diagrams, and posted beside the diagrams. The framed instructions shall be posted before acceptance testing of the systems.

SD-09 Reports

Tests.

Test reports in booklet form showing all field tests performed to adjust each component and all field tests performed to prove compliance with the specified performance criteria, upon completion and testing of the installed system. Each test report shall indicate the final position of controls.

SD-19 Operation and Maintenance Manuals

Centrifugal Pump System.

Six complete sets of instructions containing the manufacturer's operating and maintenance instructions for each piece of equipment. One complete set at the time the tests procedure is submitted; remaining sets before the contract is completed. Each set shall be permanently bound and shall have a hard cover. The following identification shall be inscribed on the covers: the words "OPERATING AND MAINTENANCE INSTRUCTIONS," name and location of the building, name of the Contractor, and contract number. Flysheets shall be placed before instructions covering each subject. Instruction sheets shall be approximately 8-1/2 by 11 inches, with large sheets of drawings folded in. Instructions shall include, but not be limited to, the following:

a. System layout showing piping, valves, and controls.

b. Approved wiring and control diagrams.

c. A control sequence describing startup, operation, and shutdown.

d. Operating and maintenance instructions for each piece of equipment, including lubrication instructions and troubleshooting guide.

e. Manufacturer's bulletins, cuts, and descriptive data; and parts list and recommended spare parts.

1.4 DELIVERY AND STORAGE

All equipment delivered and placed in storage shall be stored with protection from the weather, humidity and temperature variations, dirt and dust, or other contaminants.

PART 2 - PRODUCTS

2.1 MATERIALS AND EQUIPMENT

Materials and equipment shall be as specified below and as shown, and shall be suitable for the service intended. Materials and equipment shall be new and unused, except for tests. Where two or more pieces of equipment performing the same function are required, they shall be duplicate products of the same manufacturer.

2.2 CENTRIFUGAL WATER PUMPS

The pumps shall be the centrifugal, single-stage designed for waterworks service in the following configurations:

	Pump No.
Horizontal	1 or 2

2.2.1 Pump Service

The pumps shall be utilized for the following service:

	Pump No.
Washwater	1
Washwater	2

2.2.2 Pump Drives

The pumps shall have the following driving units and shall be directly connected to the driving units through solid shafts, flexible couplings, or free wheeling clutches (as appropriate):

	Pump No.
Electric motor drive	1 and 2

2.2.3 Pump Construction

Except as below specified, centrifugal water pumps shall be constructed in accordance with the Hydraulic Institute HI-01.

2.2.4 Pump Characteristics

The pumps shall be capable of discharging quantities at total discharge heads measured at the discharge flange, between the following limits:

Pump No.	gpm at total discharge head, ft. H(2)O	gpm at total discharge head, ft. H(2)O
1	100 gpm at 208 ft and	50 gpm at 226 ft.
2	100 gpm at 208 ft and	50 gpm at 226 ft.

Pumps shall operate at optimum efficiencies to produce the most economical pumping system under the conditions encountered. Pumps shall furnish not less than 150 percent of rated capacity at a total discharge head of not less than 65 percent of total rated head.

2.2.5 Pump Casings

Pump casings shall be cast iron of the horizontal shaft design. The casings shall be designed to permit replacement of wearing parts. Pump casings shall be of uniform quality and free from blowholes, porosity, hard spots, shrinkage defects, cracks and other injurious defects. Defects in casings shall not be repaired except when such work is approved and is done by or under the supervision of the pump manufacturer, and then only when the defects are small and do not adversely affect the strength or use of the casing. Casings shall be single or double volute with flanged piping connections conforming to ASME B16.1, Class 125. The direction of shaft rotation shall be conspicuously indicated. The casing shall have tapped openings for air venting, priming, draining, and suction and discharge gauges. A brass or bronze umbrella or vent cock shall be furnished for venting except where automatic air vents are indicated. Drain openings in the volute, intake, or other passages capable of retaining trapped water shall be located in the low point of such passages.

2.2.6 Impellers

Impellers shall be of enclosed design and shall be constructed of cast iron, carefully finished with smooth water passageways, and shall be statically and dynamically balanced. Impellers shall be securely keyed to the pump shaft.

2.2.7 Wearing Rings

Wearing rings of cast iron shall be provided for impellers. Wearing rings of a different composition or of a suitable ferrous material shall be provided for pump casings. Casing rings shall be securely fixed in position to prevent rotation. Rings shall be renewable and designed to ensure ease of maintenance.

2.2.8 Shaft

Shaft shall be of high grade steel, accurately machined, and shall be of sufficient size and strength to perform the work required. Bronze renewable shaft sleeves shall be provided for protection of the shaft in contact with water, and in the stuffing boxes. Shaft sleeves shall be keyed to the pump shaft.

2.2.9 Mechanical Seals

Mechanical seals shall be balanced or unbalanced, as necessary to conform to specified service requirements. Mechanical seals shall be constructed in a manner and of materials particularly suitable for the temperature service range and quality of water being pumped. Seal construction shall not require external source cooling for pumped-fluid service temperatures up to 250 degrees F. Seal pressure rating shall be suitable for maximum system hydraulic conditions. Materials of construction shall include AISI 300 series stainless steel, solid tungsten-carbide rotating-seal face, and Buna-N vinylidene-fluoride-hexafluoropropylene, EPT, or tetrafluoroethylene seals. Bypass flushing water supply shall be free of iron rust products and other abrasive materials and shall be directed onto face of seal without dead ending. All piping and accessories shall be provided. Throttling bushing shall have clearances to minimize leakage in case of complete seal failure without restriction of flushing water. Mechanical seals shall not be subjected to hydrostatic test pressures in excess of the manufacturer's recommendations.

2.2.10 Couplings

Couplings shall be of the heavy-duty flexible type, keyed and locked to the shaft. The outside surface of the couplings for horizontal pumps and close-coupled vertical pumps shall be machined parallel to the axis of the shaft. The faces of the couplings shall be machined perpendicular to the axis of the shaft. Disconnecting the couplings shall be accomplished without removing the driver half or the pump half of the couplings from the shaft. Couplings for vertical pumps other than close-coupled vertical pumps may be of the universal type. Flexible couplings shall not be used to compensate for misalignment of pump.

2.2.11 Balance

All rotating parts of the equipment shall operate throughout the required range without excessive end thrust, vibration, or noise. Defects of this type that cannot be eliminated by installation adjustments will be sufficient cause for rejection of the equipment. Pump impeller assemblies shall be statically and dynamically balanced to within 1/2 percent of W times R squared, where W equals weight and R equals impeller radius. Shaft

construction shall be substantial to prevent seal or bearing failure due to vibration. Total shaft peak-to-peak dynamic deflection measured by vibrometer at pump-seal face shall not exceed 2.0 mils under shutoff-head operating conditions. Flow from 1/4-inch iron pipe size (ips) pipe shall be provided during testing.

2.2.12 Bearings

Bearings shall be ball or roller type, and the main bearings shall take all radial and end thrust. Pumps that depend only on hydraulic balance to overcome end thrust will not be acceptable.

2.2.13 Lubrication

Bearings on horizontal-shaft pumps shall be either oil-bath type or grease type. Each oil reservoir shall be liberal in size and provided with an opening for filling, an overflow opening at the proper location to prevent overfilling, an oil-level sight glass, and a drain at the lowest point. Grease type bearings shall be provided with fittings for a grease gun and, if the bearings are not easily accessible, with grease tubing extending to convenient locations. The grease fittings shall be of a type that prevent over lubrication and the buildup of pressure injurious to the bearings.

2.2.14 Base Plates

Horizontal-shaft centrifugal pumps shall be provided with a common base for mounting each pump and driving unit of the pump on the same base. Each base shall be constructed of cast iron with a raised lip tapped for drainage, or of welded steel shapes with suitable drainage pan. The drainage structure shall collect the packing box leakage and shall have a 1/2-inch NPT connection to connect it to a drain.

2.2.15 Cocks, Plugs, and Accessories

The pumps shall be equipped with air cocks, drain plugs, and duplex gauges indicating discharge pressures for all pumps and suction pressures for pumps without suction lift. Gauges, equipped with a shutoff cock and snubber, shall conform to ASME B40.1, and shall be calibrated in pounds per square inch in not more than 2 psi increments. Gauge ranges shall be appropriate for the particular installation. Normal operating suction and discharge pressures of the pump shall be indicated on the mid-point range of the gauges. Pressure relief valve shall be furnished and installed where indicated.

2.2.16 Piping Connections

The pump suction and discharge shall be provided with flanged connections of suitable size and suitably arranged for piping shown. Pipe flanges shall conform to ASME B16.1 and ASME B16.5. Piping shall be installed to preclude the formation of air pockets.

2.2.17 Finish

Pump shall have painted or enameled finish as is standard with the manufacturer.

2.3 ELECTRICAL EQUIPMENT

Electrical equipment shall conform to Section 16415 ELECTRICAL WORK, INTERIOR. Electrical motor driven equipment herein specified shall be provided complete with motors, motor starters, and controls. Motor controls, equipment, and wiring shall be in accordance with NFPA 70.

2.3.1 Electric Motors

Each electric motor-driven pump shall be driven by a totally-enclosed fan cooled continuous-duty electric motor. Motor shall have a 1.15 service factor. Motors shall be squirrel-cage induction motors having normal-starting-torque and low-starting-current characteristics, and shall be of sufficient size so that the nameplate horsepower rating will not be exceeded throughout the entire published pump characteristic curve. Motor bearings shall provide smooth operations under the conditions encountered for the life of the motor. Adequate thrust bearing shall be provided in the motor to carry the weight of all rotating parts plus the hydraulic thrust and shall be capable of withstanding upthrust imposed during pump starting . Motors shall be rated 480 volts, 3 phase, 60 Hz and such rating shall be stamped on the nameplate. Motors shall conform to NEMA MG 1.

2.3.2 Control Equipment

Automatically controlled pumps shall have three-position "MANUAL-OFF-AUTOMATIC" selector switch in cover. Additional controls or protective devices shall be as indicated.

2.4 EQUIPMENT APPURTENANCES

2.4.1 Attachments

All necessary bolts, nuts, washers, bolt sleeves, and other types of attachments for the installation of the equipment shall be furnished with the equipment. Bolts shall conform to the requirements of ASTM A 307 and nuts shall be hexagonal of the same quality as the bolts used. Threads shall be clean-cut and shall conform to ASME B1.1. Bolts, nuts, and washers specified or indicated to be stainless steel shall be Type 316.

2.4.2 Equipment Guards

Equipment driven by open shafts, belts, chains, or gears shall be provided with all-metal guards enclosing the drive mechanism. Guard shall be constructed of galvanized sheet steel or galvanized woven wire or expanded metal set in a frame of galvanized steel members. Guards shall be secured in position by steel braces or straps which will permit easy removal for servicing the equipment. The guards shall conform in all respects to all applicable safety codes and regulations.

2.4.3 Tools

A complete set of all special tools which may be necessary for the adjustment, operation, maintenance, and disassembly of all equipment shall be furnished. Special tools are considered to be those tools which because of their limited use are not normally available, but which are necessary for the particular equipment. Special tools shall be high-grade, smooth, forged, alloy, tool steel. One pressure grease gun for each type of grease required for motors and pumps shall also be furnished. All tools shall be delivered at the same time as the equipment to which they pertain. The Contractor shall properly store and safeguard such tools until completion of the work, at which time they shall be delivered to the Contracting Officer.

2.4.4 Shop Painting

All motors, pump casings, and similar parts of equipment customarily finished in the shop shall be thoroughly cleaned, primed, and given two finish coats of paint at the factory in accordance with the recommendations of the manufacturer. Ferrous surfaces not to be painted shall be given a shop coat of grease or other suitable rust-resistant coating.

PART 3 - EXECUTION

3.1 INSTALLATION

Each pump shall be installed in accordance with the written instructions of the manufacturer.

3.1.1 Concrete Foundations

Concrete for equipment foundations shall be as specified in Section 03300 CONCRETE FOR BUILDING CONSTRUCTION. Concrete foundations shall be integral with and of the same class as that of the building floor unless otherwise indicated. Concrete having a compressive strength of at least 2,500 psi shall be used in foundations that are entirely separated from the surrounding floor. A premolded filler strip shall be installed between the foundation and floor slab as shown. Foundation bolts, as required, shall be furnished for proper positioning during the placement of the concrete.

3.2 TESTS

3.2.1 Field Equipment Test

After installation of the pumping units and appurtenances is complete, operating tests shall be carried out to assure that the pumping installation operates properly. The Contractor shall make arrangements to have the manufacturer's representatives present when field equipment tests are made. Each pumping unit shall be given a running field test in the presence of the Contracting Officer for a minimum of 2 hours. Each pumping unit shall be operated at its rated capacity or such other point on its head-capacity curve selected by the Contracting Officer. The Contractor shall provide an accurate and acceptable method of measuring the discharge flow. Tests shall assure that the units and appurtenances have been installed correctly, that there is no objectionable heating, vibration, or noise from any parts, and that all manual and automatic controls function properly. If any deficiencies are revealed during any tests, such deficiencies shall be corrected and the tests shall be reconducted.

3.3 FIELD PAINTING

Stainless steel, galvanized steel, and nonferrous surfaces shall not be painted.

3.3.1 Touch-Up Painting

Factory painted items requiring touching up in the field shall be thoroughly cleaned of all foreign material and shall be primed and topcoated with the manufacturer's standard factory finish.

3.3.2 Exposed Ferrous Surfaces

Exposed ferrous surfaces shall be painted with two coats of enamel paint conforming to FS TT-E-489, Class A. Factory primed surfaces shall be solvent-cleaned before painting. Surfaces that have not been factory primed shall be prepared and primed in accordance with the enamel paint manufacturer's recommendations.

3.4 MANUFACTURER'S FIELD SERVICES

The Contractor shall install the pumps in accordance with manufacturer's recommendations with regard to plumb level, base grouted in place/filled with grout, pump and motor aligned, no stress placed on pump by suction or discharge piping. The Contractor shall obtain the services of a

manufacturer's representative experienced in the installation, adjustment, and operation of the equipment. Contractor shall furnish a report by the field service representative certifying the equipment is properly installed, fully functional, ready for use, and is operating correctly.

3.5 DEMONSTRATION

Upon completion of the work and at a time designated by the Contracting Officer, the services of one or more competent engineers shall be provided by the Contractor for a period of not less than 4 hours to instruct a representative of the Government in the operation and maintenance of equipment furnished under this section of the specifications. These field instructions shall cover all the items contained in the bound instructions.

- - o 0 o - -

SECTION 11220 - MECHANICAL MIXERS

PART 1 - GENERAL

1.1 REFERENCES

NATIONAL ELECTRICAL MANUFACTURERS ASSOCIATION (NEMA)

NEMA MG 1 (1987; Rev 1)Motors and Generators.

NEMA ICS 1 (1988; Rev 1 & 2)Industrial Controls and Systems.

1.2 SUBMITTALS

The following shall be submitted in accordance with Section 01300 - SUBMITTALS.

SD-01, Data

Mechanical Mixers.

A complete list of equipment and materials, including manufacturer's descriptive data and technical literature, performance charts and curves, catalog cuts, and installation instructions. Spare parts data for each different item of material and equipment specified, after approval of the related submittals, and not later than two (2) months prior to the date of beneficial occupancy. The data shall include a complete list of parts and supplies, with current unit prices and source of supply.

SD-04, Drawings

Mechanical Mixers.

Drawings containing complete wiring and schematic diagrams, control diagrams, and any other details required to demonstrate that the system has been coordinated and will properly function as a unit. Drawings shall show proposed layout and anchorage of equipment and appurtenances, and equipment relationship to other parts of the work including clearances for maintenance and operation.

SD-06, Instructions

Mechanical Mixers.

Proposed diagrams, instructions, and other sheets, prior to posting. Condensed operating instructions explaining preventative maintenance procedures, methods of checking the system for normal safe operation, and procedures for safely starting and stopping the system shall be prepared in typed form, framed and posted beside the diagrams. The framed instructions shall be posted before acceptance testing of the systems.

SD-19, Operation and Maintenance Manuals

Mechanical Mixers.

Six (6) copies of operation and six (6) copies of maintenance manuals for the equipment furnished. One complete set shall be furnished prior to performance testing and the remainder upon acceptance. Operating manuals shall detail the step-by-step procedures required for system startup, operation, and shutdown. Operating manuals shall include the manufacturer's name, model number, parts list, and brief description of all equipment and their basic operating features. Maintenance manuals shall list routine maintenance procedures, possible breakdowns and repairs, and troubleshooting guides. Maintenance manuals shall include piping and equipment layout and simplified wiring and

control diagrams of the system as installed. Manuals shall be approved prior to the field training course.

SD-94, Warranties

Mechanical Mixers.

Written guarantees shall be provided on the integrity of the equipment and accessories furnished.

1.3 DELIVERY AND STORAGE

All equipment delivered and placed in storage shall be stored with protection from the weather, excessive humidity and excessive temperature variation; and dirt, dust, or other contaminants.

1.4 FIELD MEASUREMENTS

The Contractor shall become familiar with all details of the work, verify all dimensions in the field, and shall advise the Contracting Officer of any discrepancy before performing the work.

PART 2 - PRODUCTS

2.1 GENERAL MATERIAL AND EQUIPMENT REQUIREMENTS

Materials and equipment shall be the standard products of a manufacturer regularly engaged in the manufacture of such products and shall essentially duplicate items that have been in satisfactory use for at least 2 years prior to bid opening. Equipment shall be supported by a service organization that is, in the opinion of the Contracting Officer, reasonably convenient to the site. Mixer casings shall be constructed of cast iron of uniform quality and free from blow holes, porosity, hard spots, shrinkage defects, cracks, and other injurious defects. Impellers shall be constructed of materials resistant to the chemical substance being mixed.

2.1.1 Nameplates

Each major item of equipment shall have the manufacturer's name, address, type or style, model or serial number, and catalog number on a plate secured to the item of equipment.

2.1.2 Equipment Guards

Belts, pulleys, chains, gears, projecting setscrews, keys, and other rotating parts so located that any person may come in close proximity thereto shall be enclosed or guarded.

2.1.3 Special Tools

One set of special tools, calibration devices, and instruments required for operation, calibration, and maintenance of the equipment shall be provided.

2.1.4 Electric Motors

Motors shall conform to NEMA MG 1.

2.1.5 Motor Controls

Controls shall conform to NEMA ICS 1.

2.1.6 Bolts, Nuts, Anchors, and Washers

Bolts, nuts, anchors, and washers shall be Type 304 stainless steel.

2.2 MECHANICAL MIXERS

Mechanical mixers shall be designed to provide complete mixing in both the disinfection of influent and dechlorination of effluent processes. Mechanical mixers shall consist of a vertical type electric drive motor with direct drive impeller.

2.3 SYSTEM COMPONENT DESCRIPTIONS

The following component descriptions apply equally to mechanical mixers used in the disinfection and dechlorination processes:

a. Number of Mixers Required: 2
b. Drive Motors: 2hp, 125 rpm output.
c. Motor Shaft: Removable 2" x 112" shaft.
d. Impeller: 30" diameter, removable bolted to the hub.
e. Mixer Mounting: Beam plate mount

2.4 ELECTRICAL WORK

Electrical motor driven equipment specified shall be provided complete with motors, motor starters, and controls. Electric equipment and wiring shall be in accordance with Section 16415 ELECTRICAL WORK, INTERIOR. Electrical characteristics shall be as specified or indicated. Motor starters shall be provided complete with thermal overload protection and other appurtenances necessary for the motor control specified. Manual or automatic control and protective or signal devices required for the operation specified, and any control wiring required for controls and devices but not shown, shall be provided.

PART 3 - EXECUTION

3.1 INSTALLATION

Mechanical mixers shall be installed in accordance with the written instructions of the manufacturer.

3.2 FIELD TESTING AND ADJUSTING EQUIPMENT

3.2.1 Operational Test

Prior to acceptance, an operational test of all mixers, drivers, and control systems shall be performed to determine if the installed equipment meets the purpose and intent of the specifications. Tests shall demonstrate that the equipment is not electrically, mechanically, structurally, or otherwise defective; is in safe and satisfactory operating condition; and conforms with the specified operating characteristics. Prior to applying electrical power to any motor driven equipment, the drive train shall be rotated by hand to demonstrate free operation of all mechanical parts. Tests shall include checks for excessive vibration, correct operation of control systems and equipment, proper alignment, excessive noise levels, and power consumption.

3.2.2 Retesting

If any deficiencies are revealed during any test, such deficiencies shall be corrected and the tests shall be reconducted.

3.3 PAINTING

3.3.1 Factory Painting

Factory painting shall conform to manufacturer's standard factory finish.

3.3.2 Field Painting

Equipment which does not receive a factory finish shall be painted as

specified in Section 09900 PAINTING, GENERAL. Factory painted items requiring touching up in the field, shall be thoroughly cleaned of all foreign material and shall be primed and topcoated with the manufacturer's standard factory finish. Coating shall be not less than 1.78 mils thick.

3.4 MANUFACTURER'S SERVICES

Services of a manufacturer's representative who is experienced in the installation, adjustment, and operation of the equipment specified shall be provided. The representative shall supervise the installation, adjustment, and testing of the equipment.

3.5 POSTING FRAMED INSTRUCTIONS

Framed instructions containing wiring and control diagrams under glass or in laminated plastic shall be posted where directed. Condensed operating instructions, prepared in typed form, shall be framed as specified above and posted beside the diagrams. The framed instructions shall be posted before acceptance testing of the system.

3.6 FIELD TRAINING

A field training course shall be provided for designated operating and maintenance staff members. Training shall be provided for a total period of 4 hours or normal working time and shall start after the system is functionally complete but prior to final acceptance tests. Field training shall cover all of the items contained in the operating and maintenance manuals.

- - o 0 o - -

SECTION 11310

SUBMERSIBLE PUMPS

PART 1 GENERAL

1.1 REFERENCES

The publications listed below form a part of this specification to the extent referenced. The publications are referred to in the text by the basic designation only.

AMERICAN SOCIETY FOR TESTING AND MATERIALS (ASTM)

ASTM A 36	(1990) Structural Steel.
ASTM A 48	(1983; R 1990) Gray Iron Castings.
ASTM A 153	(1982; R 1987) Zinc Coating (Hot-Dip) on Iron and Steel Hardware.

ANTI-FRICTION BEARING MANUFACTURERS ASSOCIATION (AFBMA)

AFBMA 9	(1990) Load Ratings and Fatigue Life for Ball Bearings.
AFBMA 11	(1990) Load Ratings and Fatigue Life for Roller Bearings.

NATIONAL ELECTRICAL MANUFACTURERS ASSOCIATION (NEMA)

NEMA ICS 1	(1988; Rev 1 & 2) Industrial Controls and Systems.
NEMA MG 1	(1987; Rev 1) Motors and Generators.

NATIONAL FIRE PROTECTION ASSOCIATION (NFPA)

NFPA 70	(1993) National Electrical Code.

1.2 SUBMITTALS

The following shall be submitted in accordance with Section 01300 - SUBMITTALS:

SD-01 Data

Submersible Pump System.

Pump characteristic curves showing capacity in gpm, net positive suction head (NPSH), head, efficiency, and pumping horsepower from 0 gpm to 110 percent of design capacity. A complete list of equipment and material, including manufacturer's descriptive data and technical literature, performance charts and curves, catalog cuts, and installation instructions.

Spare Parts.

Spare parts data for each different item of material and equipment specified, after approval of the related submittals, and not later than 2 months prior to the date of beneficial occupancy. The data shall include a complete list of parts and supplies, with current unit prices and source of supply.

SD-04 Drawings

Submersible Pump System.

Drawings containing complete wiring and schematic diagrams and any other details required to demonstrate that the system has been coordinated and will properly function as a unit. Drawings shall show proposed layout and anchorage of equipment and appurtenances, and equipment relationship to other parts of the work including clearances for maintenance and operation.

SD-06 Instructions

Submersible Pump System.

Diagrams, instructions, and other sheets proposed for posting.

SD-09 Reports

Field Testing and Adjusting Equipment.

Performance test reports in booklet form showing all field tests performed to adjust each component and all field tests performed to prove compliance with the specified performance criteria, upon completion and testing of the installed system. Each test report shall indicate the final position of controls.

SD-19 Operation and Maintenance Manuals

Submersible Pump System.

Six (6) copies of operation and six (6) copies of maintenance manuals for the equipment furnished. One complete set prior to performance testing and the remainder upon acceptance. Operation manuals shall detail the step-by-step procedures required for system startup, operation, and shutdown. Operation manuals shall include the manufacturer's name, model number, parts list, and brief description of all equipment and their basic operating features. Maintenance manuals shall list routine maintenance procedures, possible breakdowns and repairs, and troubleshooting guides. Maintenance manuals shall include piping and equipment layout and simplified wiring and control diagrams of the system as installed. Manuals shall be approved prior to the field training course.

1.3 DELIVERY AND STORAGE

All equipment delivered and placed in storage shall be stored with protection from the weather, excessive humidity and excessive temperature variation; and dirt, dust, or other contaminants.

1.4 FIELD MEASUREMENTS

The Contractor shall become familiar with all details of the work, verify all dimensions in the field, and shall advise the Contracting Officer of any discrepancy before performing the work.

PART 2 PRODUCTS

2.1 GENERAL MATERIAL AND EQUIPMENT REQUIREMENTS

Materials and equipment shall be the standard products of a manufacturer regularly engaged in the manufacture of such products and shall essentially duplicate items that have been in satisfactory use for at least 2 years prior to bid opening. Equipment shall be supported by a service organization that is, in the opinion of the Contracting Officer, reasonably convenient to the site. Pump casings shall be constructed of cast iron of uniform quality and free from blow holes, porosity, hard spots, shrinkage defects, cracks, and other injurious defects. Impellers shall be cast iron.

2.1.1 Nameplates

Each major item of equipment shall have the manufacturer's name, address, type or style, model or serial number, and catalog number on a plate secured to the item of equipment.

2.1.2 Equipment Guards

Belts, pulleys, chains, gears, projecting setscrews, keys, and other rotating parts so located that any person may come in close proximity thereto shall be enclosed or guarded.

2.1.3 Special Tools

One set of special tools, calibration devices, and instruments required for operation, calibration, and maintenance of the equipment shall be provided.

2.1.4 Electric Motors

Motors shall conform to NEMA MG 1.

2.1.5 Motor Controls

Controls shall conform to NEMA ICS 1.

2.1.6 Bolts, Nuts, Anchors, and Washers

Bolts, nuts, anchors, and washers shall be steel; galvanized in accordance with ASTM A 153.

2.2 SUBMERSIBLE CENTRIFUGAL PUMPS

2.2.1 System Requirements

Pumps shall be product of single manufacturer. Quantity of pumps: See pump schedule. Pumping units shall consist of submersible pumps and motors, guide rails, lifting chains, discharge elbow and mounting plate, anchor bolts, access frame and cover, portable hoist, electric cables, and accessories for a complete, operable system. Pumps shall be suitable for pumping Playa Lake water and treated effluent and shall be capable of passing 3 inch spheres without clogging. Pumps shall be suitable for continuous operation at flow conditions stated herein without excessive noise, vibration, heating, cavitation, or damage to pump. Head characteristics for pumps: Continuously rising as flow is decreased. Shutoff head shall be minimum of 1.5 times rated head. Pump shall be capable of pumping 1.5 times rated capacity while remaining on rated pump curve. Size pumps to allow increase in rated pump head by as much as 10 percent by replacement of impellers. Fit each pump with centered lifting loop and galvanized lifting chain of adequate strength to raise and lower pumping unit. Chain shall be of length required for installation depth shown on Drawings. Discharge connections shall be permanently installed in wet well with discharge piping. Pump shall automatically connect to discharge connection elbow when lowered into place and shall disengage easily and automatically without removal of fasteners or piping when pump is raised. Attach sliding guide bracket to pump units for wet well installations which will slide between a minimum of 2 guide rails to properly position pump discharge on discharge connection elbow. Pump, appurtenances, and cable shall be capable of continuous submergence underwater to depth of 20 feet without loss of watertight integrity. Design pump motors to operate continuously at design conditions with 100 percent of motor unsubmerged without overheating.

2.2.2 Pump Characteristics and Schedule

Maximum depth of Submergence: 20 feet.

Pump Schedule:

Service	Quantity	Design Operating Point			Nominal Speed rpm	Comment
		Flow, gpm	Head, ft	Min. Eff., %		
Effluent	2	750	100	60	1,750	Constant Speed
Flood Water	2	575	25	55	1,750	Constant Speed

2.2.3 Pump Casing

The casing shall be capable of withstanding operating pressures 50 percent greater than the maximum operating pressures. The volute shall have smooth passages which provide unobstructed flow through the pump. The casing shall be made of cast iron ASTM A 48. Provide with replaceable wearing rings.

2.2.4 Mating Surfaces

Mating surfaces where watertight seal is required, including seal between discharge connection elbow and pump, shall be machined and fitted with nitrile rubber O-rings. Fitting shall be such that sealing is accomplished by metal-to-metal contact between mating surfaces, resulting in proper compression of the O-rings without the requirement of specific torque limits.

2.2.5 Coatings

Exterior surfaces of the casing in contact with water shall be protected by a sewage resistant coal tar epoxy coating. All exposed nuts and bolts shall be Type 304 stainless steel.

2.2.6 Impeller

The impeller shall be of the double shrouded non-clogging design to minimize clogging of solids, fibrous materials, heavy sludge, or other materials found in sewage. The impeller shall be statically, dynamically, and hydraulically balanced within the operating range and to the first critical speed at 150 percent of the maximum operating speed. The impeller shall be securely keyed to the shaft with a locking arrangement whereby the impeller cannot be loosened by torque from either forward or reverse direction. The impeller shall be made of cast iron, ASTM A 48.

2.2.7 Wearing Rings

Wearing rings shall be renewable type and shall be provided on the impeller and casing and shall have wearing surfaces normal to the axis of rotation. Material for wear rings shall be standard of pump manufacturer. Wearing rings shall be designed for ease of maintenance and shall be adequately secured to prevent rotation.

2.2.8 Pump Shaft

The pump shaft shall be of high grade alloy steel and shall be of adequate size and strength to transmit the full driver horsepower with a liberal safety factor. Machine and polish over entire length. Dynamically balanced with impeller at all operating speeds. Isolate shaft from pumped liquid.

2.2.9 Seals

A tandem mechanical shaft seal system running in an oil bath shall be provided. Seals shall be of tungsten-carbide with each interface held in contact by its own spring system. Mechanical seals which require a constant pressure differential to effect sealing will not be allowed.

2.2.10 Bearings

Pump bearings shall be ball or roller type designed to handle all thrust loads in either direction. Pumps depending only on hydraulic balance end thrust will not be acceptable. Bearings shall have an AFBMA L-10 life of 50,000 hours minimum, as specified in AFBMA 9 or AFBMA 11. Bearings shall be permanently lubricated with grease or oil specifically suited for high temperature application.

2.2.11 Motor

The pump motor shall be submersible type, have Class F insulation, NEMA B design, in accordance with NEMA MG 1, and shall be watertight. The motor shall be either oil filled, air filled with a water jacket, or air filled with cooling fins which encircles the stator housing. Electrical characteristics: 480 volts ac, 3-phase, 60 Hz. Nameplate horsepower shall be not less than maximum required pump input for all conditions of head and capacity for full range of impeller furnished.

2.2.12 Power Cable

The power cable shall comply with NFPA 70, Type SO, and shall be of standard construction for submersible pump applications. The power cable shall enter the pump through a heavy duty entry assembly provided with an internal grommet assembly to prevent leakage. The cable entry junction chamber and motor shall be separated by a stator lead sealing gland or terminal board which shall isolate the motor interior from foreign material gaining access through the pump top. Epoxies, silicones, or other secondary sealing systems are not acceptable.

2.2.13 Installation Systems

2.2.13.1 Rail Mounted Systems

Rail mounted installation systems shall consist of guide rails, a sliding bracket, and a discharge connection elbow. Guide rails shall be of the size and type standard with the manufacturer and shall not support any portion of the weight of the pump. The sliding guide bracket shall be an integral part of the pump unit. The discharge connection elbow shall be permanently installed in the wet well along with the discharge piping. The pump shall be automatically connected to the discharge connection elbow when lowered into place and shall be easily removed for inspection and service without entering the pump well.

2.2.13.2 Lifting Chain

Lifting chain to raise and lower the pump through the limits indicated shall be provided. The chain shall be galvanized and shall be capable of supporting the pump.

2.2.14 Access Frame and Cover

Provide access frames and covers for pump installations and valve pit at Flood Water Pump Station where shown. Access frames and covers shall be sized and completely coordinated with pumps and shall be furnished by pump manufacturer. Covers shall be lockable.

a. Frame: 1/4 inch x 3 inches x 3 inches steel angle.

b. Cover: 1/4 inch aluminum diamond plate, rated support strength 150 lb/sq ft.

2.2.14.1 Construction:

a. Double leaf covers: Equip hinges with torsion bars. Provide with safety chains which position automatically on open sides of opening when covers are raised.

b. Single leaf covers: Equip with cover lifting mechanisms to aid in opening/closing covers.

c. Provide automatic hold-open and cover release arms.

d. Cover: Equip with underside-mounted slam lock with attached handle and flush removable plug and key wrench handle for topside use.

e. Top surface of doors shall be skidproof.

f. Equip frame with rails or O-ring device for attaching lifting chain and other accessories.

2.2.15 Portable Hoist System

Provide portable hoist system for Flood Water Pump Station. Portable hoist system shall be sized and completely coordinated with pumps; furnished by pump manufacturer; and shall include platform socket, crane, hoist, and accessories as required for complete system.

a. Safe load: Minimum 1.8 times submersible pump weight.

b. Weight: Maximum 75 lb.

c. Lft: Minimum 30 feet.

2.2.16 Level Sensors

2.2.16.1 Level Switches

Level switches shall be in accordance with Section 16904 LIQUID LEVEL SENSORS.

2.2.17 Identification

Permanently attach stainless steel nameplate to pump. Nameplate shall contain following information:

a. Serial number of pump.

b. Capacity in gpm.

c. Pumping head in feet.

d. Speed, rpm.

e. Manufacturer's name.

f. Size and type of pump.

g. Design pressure and temperature.

Each pump shall be provided with a cast-in or permanently attached direction-of-rotation arrow.

2.3 ELECTRICAL WORK

Electrical motor driven equipment specified shall be provided complete with motors, motor starters, and controls. Electric equipment and wiring shall be in accordance with Section 16415 ELECTRICAL WORK, INTERIOR. Electrical characteristics shall be as specified or indicated. Motor starters shall be provided complete with thermal overload protection and other

appurtenances necessary for the motor control specified. Manual or automatic control and protective or signal devices required for the operation specified, and any control wiring required for controls and devices but not shown, shall be provided.

PART 3 EXECUTION

3.1 EQUIPMENT INSTALLATION

3.1.1 Pump Installation

Pumping equipment and appurtenances shall be installed in the position indicated and in accordance with the manufacturer's written instructions. All appurtenances required for a complete and operating pumping system shall be provided, including such items as piping, conduit, valves, wall sleeves, wall pipes, concrete foundations, anchors, grouting, pumps, drivers, power supply, and controls.

3.1.2 Concrete

Concrete shall conform to Section 03301 CONCRETE FOR BUILDING CONSTRUCTION.

3.2 PAINTING

Pumps and motors shall be thoroughly cleaned, primed, and given two finish coats of paint at the factory in accordance with the recommendations of the manufacturer. Field painting required for ferrous surfaces not finished at the factory is specified in Section 09900 PAINTING, GENERAL.

3.3 FIELD TESTING AND ADJUSTING EQUIPMENT

3.3.1 Operational Test

Prior to acceptance, an operational test of all pumps, drivers, and control systems shall be performed to determine if the installed equipment meets the purpose and intent of the specifications. Tests shall demonstrate that the equipment is not electrically, mechanically, structurally, or otherwise defective; is in safe and satisfactory operating condition; and conforms with the specified operating characteristics. Prior to applying electrical power to any motor driven equipment, the drive train shall be rotated by hand to demonstrate free operation of all mechanical parts. Tests shall include checks for excessive vibration, leaks in all piping and seals, correct operation of control systems and equipment, proper alignment, excessive noise levels, and power consumption.

3.3.2 Retesting

If any deficiencies are revealed during any test, such deficiencies shall be corrected and the tests shall be reconducted.

3.4 MANUFACTURER'S SERVICES

Services of a manufacturer's representative who is experienced in the installation, adjustment, and operation of the equipment specified shall be provided. The representative shall supervise the installation, adjustment, and testing of the equipment.

3.5 POSTING FRAMED INSTRUCTIONS

Framed instructions containing wiring and control diagrams under glass or in laminated plastic shall be posted where directed. Condensed operating instructions, prepared in typed form, shall be framed as specified above and posted beside the diagrams. The framed instructions shall be posted before acceptance testing of the system.

3.6 FIELD TRAINING

A field training course shall be provided for designated operating and maintenance staff members. Training shall be provided for a total period

of 8 hours of normal working time and shall start after the system is functionally complete but prior to final acceptance tests. Field training shall cover all of the items contained in the operating and maintenance manuals.

- - o 0 o - -

SECTION 11330

MECHANICAL BAR SCREEN

PART 1 GENERAL

1.1 REFERENCES

The publications listed below form a part of this specification to the extent referenced. The publications are referred to in the text by basic designation only.

AMERICAN SOCIETY FOR TESTING AND MATERIALS (ASTM)

ASTM A 36	(1991) Structural Steel
ASTM A 47	(1990) Ferritic Malleable Iron Castings
ASTM A 153	(1982; R 1987) Zinc Coating (Hot-Dip) on Iron and Steel Hardware

ANTI-FRICTION BEARING MANUFACTURERS ASSOCIATION (AFBMA)

AFBMA 9	(1990) Load Ratings and Fatigue Life for Ball Bearings
AFBMA 11	(1990) Load Ratings and Fatigue Life for Roller Bearings

NATIONAL ELECTRICAL MANUFACTURERS ASSOCIATION (NEMA)

NEMA 250	(1991) Enclosures for Electrical Equipment (1000 Volts Maximum)
NEMA ICS 1	(1988; Rev 1, 2 & 3) Industrial Controls and Systems
NEMA ICS 2	(1988; Rev 1) Industrial Control Devices, Controllers and Assemblies
NEMA ICS 3	(1988; Rev 1) Industrial Systems
NEMA ICS 4	(1983; R 1988) Terminal Blocks for Industrial Use
NEMA ICS 6	(1988; Rev 1) Enclosures for Industrial Control and Systems
NEMA MG 1	(1987; Rev 1) Motors and Generators

UNDERWRITERS LABORATORIES (UL)

UL 98	(1987; Rev thru Apr 20, 1990) Enclosed and Dead-Front Switches

1.2 GENERAL REQUIREMENTS

1.2.1 Standard Products

Material and equipment shall be the standard products of a manufacturer regularly engaged in the manufacture of the products.

1.2.2 Nameplates

Each major item of equipment shall have manufacturer's name, address, and catalog or model number on a plate securely attached to item. In lieu of attached nameplate, manufacturer's name or trademark may be cast integrally stamped or otherwise permanently marked.

1.2.3 Protection from Moving Parts

Moving parts of the equipment, such as drive chains and sprockets, shall be fully enclosed in removable guards. Equipment above the level of the sewage-carrying channel shall be fully enclosed in a cast iron or 1.897 mm (14-gauge) sheet steel or wrought-iron housing. Housing shall be provided with a sufficient number of doors or removable panels to ensure ready access to any part of equipment for repairs, replacements, or cleaning. Joint between the housing and the concrete foundation shall be made leakproof.

1.2.4 Verification of Dimensions

The Contractor shall become familiar with all details of the work, verify all dimensions in the field, and shall advise the Contracting Officer of any discrepancy before performing the work.

1.3 SUBMITTALS

The following shall be submitted in accordance with Section 01300 SUBMITTAL DESCRIPTIONS:

SD-01 Data

Spare Parts.

Spare parts data for each different item of material and equipment specified, after approval of the detail drawings, and not later than 1 month prior to the date of beneficial occupancy. The data shall include a complete list of parts and supplies, with current unit prices and source of supply, and a list of the parts recommended by the manufacturer to be replaced after 1 year of service.

SD-04 Drawings

Framed Instructions.

Detail drawings shall consist of a complete list of equipment and materials, including manufacturer's descriptive and technical literature, catalog cuts; and installation instructions. Detail drawings shall also contain complete wiring and schematic diagrams, equipment layout and anchorage, and any other details required to demonstrate that the system has been coordinated and will properly function as a unit.

SD-06 Instructions

Mechanical Bar Screen.

Framed instructions under glass or in laminated plastic, including wiring and control diagrams showing the complete layout of the entire system, posted where directed. The framed instructions shall be posted before acceptance testing of the systems. Condensed operating instructions explaining preventive maintenance procedures, methods of checking the system for normal safe operation and procedures for safely starting and stopping the system shall be prepared in typed form, framed as specified above for the wiring and control diagrams and posted beside the diagrams. Proposed diagrams, instructions, and other sheets, prior to posting.

SD-09 Reports

Tests.

Upon completion and testing of the installed system, test reports shall be submitted in booklet form showing all field tests performed to adjust each component and all field tests performed to prove compliance with the specified performance criteria. Each test report shall indicate the final position of controls.

SD-19 Operation and Maintenance Manuals

Mechanical Bar Screen.

Six complete copies of operating instructions outlining the step-by-step procedures required for system startup, operation and shutdown. The instructions shall include the manufacturer's name, model number, service manual, parts list, and brief description of all equipment and their basic operating features. Six complete copies of maintenance instructions listing routine maintenance procedures, possible breakdowns and repairs, and troubleshooting guides. The instructions shall include simplified diagrams for the system as installed.

1.4 DELIVERY AND STORAGE

All equipment delivered and placed in storage shall be stored with protection from the weather, humidity and temperature variation, dirt and dust, or other contaminants.

1.5 MANUFACTURER'S SERVICES

The Contractor shall obtain the services of the manufacturer's representative who is experienced in the installation, adjustment, and operation of the equipment specified. The representative shall supervise the installation, adjustment, and testing of the equipment.

PART 2 PRODUCTS

2.1 MATERIALS AND EQUIPMENT

Materials and equipment shall conform to the respective publications and other requirements specified and shall be the standard products of a manufacturer regularly engaged in the manufacture of the products. Items of equipment shall essentially duplicate equipment that has been in satisfactory use at least 2 years prior to bid opening. Equipment shall be supported by a service organization that is, in the opinion of the Contracting Officer, reasonably convenient to the site.

2.1.1 Bearings

AFBMA 9 and AFBMA 11.

2.1.2 Iron, Steel, and Miscellaneous Metal

2.1.2.1 Miscellaneous Metal

Bolts, nuts, anchors, washers, and other types of supports necessary for the installation of equipment shall be of steel or wrought iron, galvanized according to the requirements of ASTM A 153.

2.1.2.2 Malleable Iron

ASTM A 47, grade No. 32510, minimum.

2.1.2.3 Structural Steel

ASTM A 36.

2.1.3 Motors, Electric

NEMA 250, NEMA ICS 1, NEMA ICS 3, NEMA ICS 4, NEMA ICS 6 and NEMA MG 1.

2.1.4 Motor Controls

NEMA ICS 2.

2.1.5 Switches, Enclosed

UL 98.

2.2 ELECTRICAL WORK

Electrical equipment and wiring shall be in accordance with Section 16415 ELECTRICAL WORK, INTERIOR. Electrical characteristics shall be as indicated. Manual or automatic control and protective or signal devices required for the operation specified, and any control wiring required for controls and devices but not shown on electrical plans, shall be provided under this section of the specification.

2.2.1 Electric Motors

Equipment shall be provided complete with motors of the totally enclosed ball-bearing squirrel-cage induction type, with a maximum speed not to exceed 1800 rpm. Motors shall be of sufficient capacity to drive equipment at the specified capacity without exceeding rating shown on nameplate attached to the motor.

2.2.2 Motor Controls

Motor controls shall be provided to control the motor in the manner indicated or specified. Motor controls shall be coordinated with the associated motor and shall have properly sized thermal-overload protective elements. Except where otherwise indicated, starters shall be provided in watertight enclosures. Where manual control is specified, full voltage reversing starter shall be provided with a hand-off-automatic selector switch and FORWARD-OFF-REVERSE switch in the cover. Each starter shall bear an appropriate nameplate or stencil identifying equipment controlled.

2.3 MECHANICALLY-CLEANED BAR SCREEN

Bar screen shall consist of a stationary bar screen, a screen rake, a rake mechanism operated by an electric drive unit, and a dead plate and rake-cleaning device, where required. Equipment shall be installed so as not to obstruct the flow of sewage to bar screen. Unless otherwise specified, metal that is submerged in the sewage-carrying channel or that comes in contact with sewage shall be of wrought iron, steel, cast iron, or other equally corrosion-resistant metal.

2.3.1 Bar Screen

Each bar screen shall be suitable for installation in a rectangular channel 0.762 m (2 feet 6 inches) wide by 1.092 m (3 feet 7 inches) deep, and shall be designed for handling sewage flows as follows:

Average, 2,840 cubic meters per day (0.75 MGD)
Maximum, 8,515 cubic meters per day (2.25 MGD)

2.3.2 Screen Rake

Rake shall be designed to rake up screenings collected on the bar screen and in the openings between bars, and to convey screenings to a dumpster. Rake shall be of cast iron, steel, or other suitable material not less than 6.4 mm (1/4 inch) thick. Rake teeth shall be spaced so as to pass between bars of the screen. Rake teeth plate shall be easily removable and replaceable.

2.3.2.1 Rake Mechanism

Mechanism shall be endless-chain type and shall include parts and accessories necessary for a complete operating unit. Parts of the mechanism shall be amply proportioned for stresses that may occur during fabrication, erection, and operation. Individual parts that are alike in each unit shall be interchangeable. An overload-release mechanism shall be provided for overload protection. Rake speed shall not exceed 0.05 m/second (10 feet per minute.) Rake mechanism shall be provided with a complete and adequate system of lubrication to moving parts subject to wear. Bearings shall be grease- or oil-lubricated. Permanently submerged bearings shall not be allowed.

2.3.2.2 Endless-Chain-Type

Endless-chain-type rake mechanism shall consist of a drive chain, drive sprockets, and sprocket wheels mounted on a drive shaft, and an idler shaft where required, operating one or more endless chains with rakes securely attached.

a. Drive chain connecting motor sprocket with the drive shaft and the endless chain shall be of malleable iron with heat-treated-steel pins or rivets. A chain tightener or takeup bracket shall be provided for drive chain. Chains shall be of suitable size and design to withstand strains imposed.

b. Sprockets for the drive and endless chains shall be of semi-steel or cast iron with chilled teeth and rims. Rims and teeth of the sprockets shall be accurately ground to fit chains. Sprockets shall be of size recommended by the equipment manufacturer. Shafting shall be of cold-rolled steel, straight and true, and of ample diameter to transmit the power required without undue deflection. Keyways where required shall be accurately cut. Malleable iron or bronze safety collars shall be provided where required to keep shafting and sprockets in alignment.

2.3.2.3 Rake Mechanism Control Equipment

Starting of motor shall be actuated by means of automatic time switch for intermittent operation, adjustable to give 3 to 60 minutes between cycles with float switch for automatic operation at predetermined high level on the upstream side of the screen bar. Floats shall be constructed of corrosion-resistant metal.

a. Endless-Chain-Type-Rake Mechanism: A motor-reversing switch shall be provided so that direction of travel of the rake mechanism can be reversed in the event of jamming. The motor-reversing switch shall be a double-throw externally operable switch enclosed in a watertight enclosure. The switch shall be marked: "Forward," "Off," "Reverse."

b. Rake Wiper: Where required to remove screenings from rake, a rake wiping or scraping device shall be provided at the discharge point of rake. Device shall consist of either a plate attached to swinging hinged arms or a continuous hinged plate actuated by motion of the rake. Wiper shall be so designed that after cleaning of the rake is completed, wiper will fall into the proper place ready for the next scraping operation. Fall of wiper shall be controlled either mechanically or hydraulically to absorb any shock.

c. Dead Plate or Apron: A wrought iron or steel dead plate shall be provided where required to prevent any deposited screenings from falling into the downstream side of rake. Dead plate shall be not less than 2.657 mm (12-gauge) metal if required by the design and type of rake mechanism installed, and shall be rigidly braced if required.

PART 3 EXECUTION

3.1 INSTALLATION

All materials and equipment shall be installed as shown and in accordance with the approved written recommendations of the equipment manufacturer.

3.2 CONCRETE FOUNDATIONS

Concrete for foundations shall be as specified in Section 03300 CONCRETE FOR BUILDING CONSTRUCTION. Concrete foundations shall be integral with, and of same strength as the building floor, unless otherwise specified. Concrete used in foundations that are entirely separated from the surrounding floor shall be 17 MPa 2,500 psi. When new foundations are

constructed on existing concrete, new concrete shall be bonded to old as specified in Section 03300 CONCRETE FOR BUILDING CONSTRUCTION. Foundation bolts, as required, shall be furnished for proper positioning during placement of concrete.

3.3 SPECIAL TOOLS

Special tools shall be furnished for the proper operation and maintenance of equipment, and shall be installed in a wall-mounted hardwood or metal container. The Contractor shall furnish a complete set of manufacturer's recommended spare parts including cutting teeth and combs or other cutting elements, fasteners, screens, seals or bearings, etc.

3.4 PAINTING

Equipment shall be thoroughly cleaned, primed, and given two finish coats of paint at the factory in accordance with the recommendations of the manufacturer. Field painting is specified in Section 09900 PAINTING, GENERAL.

3.5 TESTS

After installation of the mechanical bar screen is complete, Contractor shall conduct operational tests required to demonstrate that the mechanical bar screen will operate in accordance with the requirements of this section of the specifications.

3.6 TRAINING

A field training course shall be provided for designated operating and maintenance staff members. Training shall be provided for a total period of 8 hours of normal working time and shall start after the system is functionally complete but prior to final acceptance tests. Field training shall cover all of the items contained in the Operating and Maintenance Instructions.

-- o O o --

SECTION 11345 - CHEMICAL FEED SYSTEM

PART 1 - GENERAL

1.1 REFERENCES

AMERICAN SOCIETY OF MECHANICAL ENGINEERS (ASME)

ASME B40.1 (1991) Gauges - Pressure Indicating Dial Type - Elastic Element

NATIONAL ELECTRICAL MANUFACTURERS ASSOCIATION (NEMA)

NEMA MG 1 (1987; Rev 1) Motors and Generators

NEMA ICS 1 (1988; Rev 1 & 2) Industrial Controls and Systems

1.2 SUBMITTALS

The following shall be submitted in accordance with Section 01300 - SUBMITTALS:

SD-01, Data

Chemical Feed System.

Pump characteristics curves showing capacity in gph, head, efficiency, and pumping horsepower from 0 gph to 110 percent of design capacity. A complete list of equipment and material, including manufacturer's descriptive data and technical literature, performance charts and curves, catalog cuts, and installation instructions.

SD-04, Drawings

Chemical Feed System.

Drawings containing complete wiring and schematic diagrams and any other details required to demonstrate that the system has been coordinated and will properly function as a unit. Drawings shall show proposed layout and anchorage of equipment and appurtenances, and equipment relationship to other parts of the work including clearances for maintenance and operation.

SD-06, Instructions

Chemical Feed System.

Proposed diagrams, instructions, and other sheets, prior to posting. Approved wiring and control diagrams showing the complete layout of the entire system, including equipment, piping valves, and control sequence, framed under glass or in approved laminated plastic, shall be posted where directed. Condensed operating instructions explaining preventive maintenance procedures, methods of checking the system for normal safe operation, and procedures for safely starting and stopping the system shall be prepared in typed form, framed as specified above for the wiring and control diagrams, and posted beside the diagrams. The framed instructions shall be posted before acceptance testing of the system.

SD-19, Operation and Maintenance Manuals

Chemical Feed System.

Six (6) copies of operation and six (6) copies of maintenance manuals for the equipment furnished. One complete set prior to performance testing and the remainder upon acceptance. Operation manuals shall detail the step-by-step procedures required for system startup, operation, and shutdown. Operation manuals shall include the manufacturer's name, model number, parts list, and brief description of all equipment and their basic operating features. Maintenance manuals shall list routine maintenance procedures, possible breakdowns and repairs, and troubleshooting guides. Maintenance manuals shall include piping and equipment layout and simplified wiring and control diagrams of the system as installed. Manuals shall be approved prior to the field training course.

SD-94, Warranties

Chemical Feed System.

Written guarantees shall be provided on the integrity of the equipment and accessories furnished.

1.3 DELIVERY AND STORAGE

All equipment delivered and placed in storage shall be stored with protection from the weather, excessive humidity and excessive temperature variation; and dirt, dust, or other contaminants.

1.4 FIELD MEASUREMENTS

The Contractor shall become familiar with all details of the work, verify all dimensions in the field, and shall advise the Contracting Officer of any discrepancy before performing the work.

PART 2 - PRODUCTS

2.1 GENERAL MATERIAL AND EQUIPMENT REQUIREMENTS

Materials and equipment shall be the standard products of a manufacturer regularly engaged in the manufacture of such products and shall essentially duplicate items that have been in satisfactory use for at least 2 years prior to bid opening. Equipment shall be supported by a service organization that is, in the opinion of the Contracting Officer, reasonably convenient to the site.

2.2 Nameplates

Each major item of equipment shall have the manufacturer's name, address, type or style, model or serial number, and catalog number on a plate secured to the item of equipment.

2.2.1 Equipment Guards

Belts, pulleys, chains, gears, projecting setscrews, keys, and other rotating parts so located that any person may come in close proximity thereto shall be enclosed or guarded.

2.2.2 Special Tools

One set of special tools, calibration devices, and instruments required for operation, calibration, and maintenance of the equipment shall be provided.

2.2.3 Electric Motors

Motors shall conform to NEMA MG 1.

2.2.4 Motor Controls

Controls shall conform to NEMA ICS 1.

2.2.5 Bolts, Nuts, Anchors, and Washers

Bolts, nuts, anchors, and washers shall be Type 304 stainless steel.

2.2.6 Pressure Gauges

Standard gauges shall be provided on the discharge side of pumps and comply with ASME B40.1. Gauge ranges shall be as appropriate for the particular installation.

2.3 CHEMICAL FEED PUMPS

Chemical feed pumps shall be mechanically driven diaphragm metering type designed to handle and precisely meter feeding chemicals.

2.3.1 Sodium Hypochlorite Feed Pumps

The pumps shall be designed for the treatment of wastewater by the application of sodium hypochlorite with a concentration of 12.5% for disinfection purposes. The sodium hypochlorite feeding systems shall consist of controls and devices necessary for a complete operating system including calibration tube, pressure relief valves, pulsation dampeners, pressure gauges, back pressure gauges, and rotometers.

2.3.1.1 Pump Characteristics

Feeding pumps used in the disinfection process have the following operating characteristics.

a. Pump Service: Disinfection Process
b. Design Operating Point: 12 to 36 GPH flow at a 40 psig back pressure reading.
c. Pump Type: Diaphragm metering pump, 116 SPM, flow rate manually controlled by a 0 to 100% adjustment mechanism accurate to ± 1%.
d. Parts Material: Glass-filled teflon (PTFE)
e. Number Required: Total of 3 pumps

2.3.1.2 Metering Pump Accessories

a. Calibration Chamber: 2000 cc volume tube, one required.
b. Pressure Relief Valve: Adjustable 25 to 170 psi rating, three required.
c. Pulsation Dampener: 250 psi maximum operating pressure, two required.
d. Pressure Gauge: 0 to 100 psi, two required.
e. Back Pressure Valve: 0 to 150 psi rating, two required.
f. Rotometer: Kynar and glass construction, two required.

2.3.2 Sodium Bisulfite Feed Pumps

The pumps shall be designed for the treatment of wastewater by the application of sodium bisulfate with a concentration of 38% for dechlorination purposes. The sodium bisulfate feeding systems shall consist of controls and devices necessary for a complete operating system including calibration tube, pressure relief valves, pulsation dampener, pressure gauge, back pressure gauge, and rotometer.

2.3.2.1 Pump Characteristics

Metering pumps used in the dechlorination process have the following operating characteristics.

a. Pump Service: Dechlorination Process
b. Design Operating Point: 0.5 to 1.6 GPH flow at a 40 psig back pressure reading.
c. Pump Type: Diaphragm metering pump, 44 SPM, flow rate manually controlled by a 0 to 100% adjustment mechanism accurate to ± 1%.
d. Parts Material: Glass-filled teflon (PTFE)
e. Number Required: Total of 3 pumps

2.3.2.2 Metering Pump Accessories

a. Chemical Supply: 55-gallon drums, six to be provided with system.
b. Calibration Chamber: 2000 cc volume tube, one required.
c. Pressure Relief Valve: Adjustable-25 to 170 psi, two required.
d. Pulsation Dampener: 250 psi maximum operating pressure, one required.
e. Pressure Gauges: 0 to 100 psi, one required.
f. Back Pressure Valve: 0 to 150 psi rating, one required.
g. Rotometer: Kynar and glass construction, one required.

2.4 ELECTRICAL WORK

Electrical motor driven equipment specified shall be provided complete with motors, motor starters, and controls. Electric equipment and wiring shall be in accordance with Section 16415 ELECTRICAL WORK, INTERIOR. Electrical characteristics shall be as specified or indicated. Motor starters shall be provided complete with thermal overload protection and other appurtenances necessary for the motor control specified. Manual or automatic control and protective or signal devices required for the operation specified, and any control wiring required for controls and devices but not shown, shall be provided.

PART 3 - EXECUTION

3.1 EQUIPMENT INSTALLATION

3.1.1 Chemical Feed System

The sodium hypochlorite and sodium bisulfite feeding machines and all equipment appurtenances shall be installed in accordance with the instructions of the manufacturer.

3.1.2 Pipe, Tubing, Hangers, and Supports

The installation of pipes and tubes shall be in accordance with Section 15400-PLUMBING, GENERAL PURPOSE

3.2 TESTING

After installation of the sodium hypochlorite and sodium bisulfite feeding pumps is complete, operating tests shall be carried out to assure that the installations operate properly. All piping shall be tested hydrostatically and for leaks. If any deficiencies are revealed during any test, such deficiencies shall be corrected and the tests shall be reconducted.

3.3 PAINTING

3.3.1 Factory Painting

Factory painting shall conform to manufacturer's standard factory finish.

3.3.2 Field Painting

Equipment which did not receive a factory finish shall be painted as specified in Section 09900 PAINTING, GENERAL. Factory painting items requiring touching up in the field, shall be thoroughly cleaned of all foreign material and shall be primed and topcoated with the manufacturer's standard factory finish provided it does not discolor in the presences of hydrogen sulfide fumes, high water vapor atmosphere, alkaline water vapor, and concentrated chlorine (oxidizing) conditions. Coating shall be not less than 1.78 mils thick.

3.4 FRAMED INSTRUCTIONS

Framed operating instructions under glass or in laminated plastic, including wiring and control diagrams showing the complete layout of the entire system, shall be posted where directed. Condensed operating instructions explaining preventative maintenance procedures, methods of checking the system for normal safe operation, and procedures for safely starting and stopping the system shall be prepared in typed form, framed as specified and posted beside the diagrams. The framed instructions shall be posted before acceptance testing of the system.

3.5 MANUFACTURER'S FIELD SERVICE

3.5.1 Manufacturer's Supervision

Services of a manufacturer's representative who is experienced in the installation, adjustment, and operation of the equipment specified shall be provided. The representative shall supervise the installation, adjustment, and testing of the equipment.

3.5.2 Field Training

A field training course shall be provided for designated operating staff members. Training shall be provided for a total period of 12 hours of normal working time and shall start after the system is functionally complete but prior to final acceptance tests. Field training shall cover all of the items contained in the operating and maintenance instructions.

- - o 0 o - -

SECTION 11375 - AIR SUPPLY FOR SEWAGE TREATMENT

PART 1 - GENERAL

1.1 REFERENCES

The publications listed below form a part of this specification to the extent referenced. The publications are referred to in the text by basic designation only.

AMERICAN GEAR MANUFACTURERS ASSOCIATION (AGMA)

AGMA 421.06	(1969) Practice for High Speed Helical and Herringbone Gear Units.

AMERICAN SOCIETY FOR TESTING AND MATERIALS (ASTM)

ASTM A 53	(1990a) Pipe, Steel, Black and Hot-Dipped, Zinc-Coated Welded and Seamless.
ASTM A 240	(1990) Heat-Resisting Chromium and Chromium-Nickel Stainless Steel Plate, Sheet, and Strip for Pressure Vessels.
ASTM A 480	(1990) Flat-Rolled Stainless Heat-Resisting Steel Plate, Sheet, and Strip.
ASTM A 524	(1989) Seamless Carbon Steel Pipe for Atmospheric and Lower Temperatures.
ASTM A 530	(1990) Specialized Carbon and Alloy Steel Pipe.
ASTM A 554	(1990) Welded Stainless Steel Mechanical Tubing.
ASTM A 774	(1990) As-Welded Wrought Austenitic Stainless Steel Fittings for General Corrosive Service at Low and Moderate Temperatures.
ASTM A 778	(1990) Welded, Unannealed Austenitic Stainless Steel Tubular Products.
ASTM B 98	(1984) Copper - Silicon Alloy Rod, Bar, and Shapes.
ASTM B 584	(1990b) Copper Alloy Sand Castings for General Applications.

AMERICAN SOCIETY OF HEATING, REFRIGERATING AND AIR-CONDITIONING ENGINEERS (ASHRAE)

ASHRAE 52	(1968; R 1976) Air-Cleaning Devices Used in General Ventilation for Removing Particulate Matter.

AMERICAN SOCIETY OF MECHANICAL ENGINEERS (ASME)

ASME-17	(1989; Addenda 1989, 1990) Boiler and Pressure Vessel Code; Section IX, Welding and Brazing Qualifications.

ASME B16.1	(1989) Cast Iron Pipe Flanges and Flanged Fittings.
ASME B16.3	(1985) Malleable Iron Threaded Fittings, Classes 150 and 300.
ASME B16.5	(1988; Errata Oct 1988) Pipe Flanges and Flanged Fittings.
ASME B31.1	(1989) Power Piping.
ASME B40.1	(1991) Gauges - Pressure Indicating Dial Type - Elastic Element.

AMERICAN WATER WORKS ASSOCIATION (AWWA)

AWWA C110	(1987) Ductile-Iron and Gray-Iron Fittings, 3 In. Through 48 In., for Water and Other Liquids.
AWWA C111	(1990) Rubber-Gasket Joints for Ductile-Iron and Gray-Iron Pressure Pipe and Fittings.
AWWA C115	(1988) Flanged Ductile-Iron Pipe with Threaded Flanges.
AWWA C151	(1986) Ductile-Iron Pipe, Centrifugally Cast in Metal Molds or Sand-Lined Molds, for Water or Other Liquids.
AWWA C200	(1986) Steel Water Pipe 6 In. and Larger.
AWWA C207	(1986) Steel Pipe Flanges for Water-Works Service - Sizes 4 In. through 144 In.
AWWA C208	(1983; R 1989) Dimensions for Fabricated Steel Water Pipe Fittings.
AWWA C504	(1987) Rubber-Seated Butterfly Valves.

AMERICAN WELDING SOCIETY (AWS)

AWS D1.1	(1990) Structural Welding Code - Steel.

ANTI-FRICTION BEARING MANUFACTURERS ASSOCIATION (AFBMA)

AFBMA 9	(1990) Load Ratings and Fatigue Life for Ball Bearings.
AFBMA 11	(1990) Load Ratings and Fatigue Life for Roller Bearings.

INSTITUTE OF ELECTRICAL AND ELECTRONICS ENGINEERS (IEEE)

IEEE C37.13	(1981; R 1990) Low-Voltage AC Power Circuit Breakers Used in Enclosures.
IEEE C57.13	(1978; R 1986) Instrument Transformers.

MANUFACTURERS STANDARDIZATION SOCIETY OF THE VALVE AND FITTINGS INDUSTRY (MSS)

MSS SP-58	(1988) Pipe Hangers and Supports - Materials, Design and Manufacture.
MSS SP-69	(1991) Pipe Hangers and Supports - Selection and Application.

1.2 SUBMITTALS

The following shall be submitted in accordance with Section 01300 - SUBMITTALS:

SD-01, Data

Air Supply and Diffusion Equipment

A complete list of equipment and materials, including manufacturer's descriptive data and technical literature, performance charts and curves, catalog cuts, and installation instructions. Spare parts data for each different item of material and equipment specified, after approval of the related submittals, and not later than two 2 months prior to the date of beneficial occupancy. The data shall include a complete list of parts and supplies, with current unit prices and source of supply.

A. Shop Drawings and Product Data: Air Supply and Diffusion Equipment
   1. Sufficient data and to-scale drawings to fully illustrate:
      a. Construction and of all portions of equipment
      b. Materials of construction
      c. Structural data/computations
      d. Airflow data/computations
      e. Airflow balancing computations (orificing)
      f. Manufacturer's installation recommendations
      g. Installation, Operation and Maintenance Data

B. Show Drawings, Product Data, and Samples: Positive Displacement Blowers
   1. Complete and detailed assembly, foundation and installation drawings, prepared to scale.
   2. Detailed specifications and data describing materials, parts, and accessories used, that together make up the complete blower package.
   3. Electrical wiring diagrams.
   4. Blower performance curves (certified).
   5. Certification with supporting test data regarding noise limitation.
   6. Efficiency calculations
   7. Installation, Operation and Maintenance Manuals

Field Training;

Training plan outlining material covered and proposed schedule, 30 days prior to start of courses.

SD-04, Drawings

Air Supply and Diffusion Equipment.

Drawings containing complete wiring and schematic diagrams, control diagrams, and any other details required to demonstrate that the system has been coordinated and will properly function as a unit. Drawings shall show proposed layout and anchorage of equipment and appurtenances, and equipment relationship to other parts of the work including clearances for maintenance and operation.

SD-06, Instructions

Air Supply and Diffusion Equipment

Proposed diagrams, instructions, and other sheets.

SD-09, Reports

Field Testing

Performance test reports in booklet form showing all field tests performed to adjust each component and all field tests performed to prove compliance with the specified performance criteria, upon completion and testing of the installed system. Each test report shall indicate the final position of controls.

SD-19, Operation and Maintenance Manuals

Air Supply and Diffusion Equipment.

Six (6) copies of operation and six (6) copies of maintenance manuals for the equipment furnished. One complete set shall prior to performance testing and the remainder upon acceptance. Operating manuals shall detail the step-by-step procedures required for system startup, operation, and shutdown. Operating manuals shall include the manufacturer's name, model number, parts list, and brief description of all equipment and their basic operating features. Maintenance manuals shall list routine maintenance procedures, possible breakdowns and repairs, and troubleshooting guides. Maintenance manuals shall include piping and equipment layout and simplified wiring and control diagrams of the system as installed. Manuals shall be approved prior to the field training course.

1.3 QUALIFICATIONS

Procedures and welders shall be qualified in accordance with the code under which the welding is specified to be accomplished.

1.4 DELIVERY AND STORAGE

All equipment delivered and placed in storage shall be stored with protection from the weather, excessive humidity and excessive temperature variation; and dirt, dust, or other contaminants.

1.5 FIELD MEASUREMENTS

The Contractor shall become familiar with all details of the work, verify all dimensions in the field, and shall advise the Contracting Officer of any discrepancy before performing the work.

1.7 QUALITY ASSURANCE

The air-supply positive displacement air blowers and drive units with filters, controls, and appurtenances, and enclosures specified herein shall be provided by the manufacturer of the sequencing batch reactor specified in Section 11390, SEQUENCING BATCH REACTOR PROCESS EQUIPMENT.

PART 2 - PRODUCTS

2.1 GENERAL MATERIAL AND EQUIPMENT REQUIREMENTS

2.1.1 Standard Products

Materials and equipment shall be the standard products of a manufacturer regularly engaged in the manufacture of such products and shall essentially duplicate items that have been in satisfactory use for at least 2 years prior to bid opening. Equipment shall be supported by a service organization that is, in the opinion of the Contracting Officer, reasonably convenient to the site.

2.1.1.1 All air supply equipment to be supplied as a system by a single manufacturer.

2.1.1.2 In general, the equipment to be furnished shall consist of the blower, filters, valves, motor, drive and guard all mounted with a combination inlet/discharge silencer, completely factory assembled by the Blower manufacturer and shipped skid mounted to the jobsite, complete with a noise reducing enclosure and controls.

2.1.1.3 The air supply system shall provide the necessary air to the sequencing batch reactor and aerobic digester.

2.1.2 Nameplates

Each major item of equipment shall have the manufacturer's name, address, type or style, model or serial number, and catalog number on a plate secured to the item of equipment.

2.1.3 Special Tools

One set of special tools, calibration devices, and instruments required for operation, calibration, and maintenance of the equipment shall be provided.

2.1.4 Factory Painting

Unless otherwise specified, all equipment shall be cleaned, primed, and given two coats of machinery enamel at the factory. Fiberglass, stainless steel, and galvanized components need not be painted.

2.2 MATERIALS AND EQUIPMENT

Materials and equipment shall conform to the following respective publications and other specified requirements.

2.2.1 Ductile Iron Pipe and Fittings

Ductile iron pipe shall conform to AWWA C115 or AWWA C151. Thickness class shall be as follows: up to 4 inches diameter and over 30 inches diameter shall be Class 51; 6 inches through 24 inches diameter shall be Class 50. Mechanical joints shall conform to AWWA C111 as modified by AWWA C151. Flanged joints shall conform to AWWA C115. Fittings shall conform to AWWA C110. Buried piping shall have bituminous outside coating in accordance with AWWA C110 and inside coating shall be an epoxy lining applied in two coats to achieve 24 mil minimum total dry film thickness.

2.2.2 Steel Pipe and Fittings

Steel pipe 6 inches in diameter and larger shall be in accordance with AWWA C200, hot-dipped galvanized after fabrication. Steel pipe less than 6

inches in diameter shall be threaded end, galvanized, in accordance with ASTM A 53, standard weight. Mechanical joints shall conform to AWWA C200. Flanged joints shall conform to AWWA C207. Fittings for steel pipe 6 inches in diameter and larger shall be in accordance with AWWA C200; shall be fabricated in accordance with AWWA C208, and shall be hot-dipped galvanized after fabrication. For steel pipe less than 6 inches in diameter, fittings shall be galvanized and shall be in accordance with ASME B16.3.

2.2.3 Stainless Steel Tubing and Fittings

Unless shown or specified otherwise, stainless steel tubing shall be in accordance with the following.

2.2.3.1 Stainless Steel Tubing

Stainless steel tubing shall conform to ASTM A 778. Wall thicknesses shall be as follows: 10 inches diameter and less shall be 0.0625-inch thick (16 gauge); 12 inches diameter shall be 0.078-inch thick (14 gauge); 14 inches through 18 inches diameter shall be 0.109-inch thick (12 gauge); 20 inches diameter shall be 0.125-inch thick (11 gauge); 24 inches diameter shall be 0.140-inch thick (10 gauge).

2.2.3.2 Stainless Steel Tubing Fittings

Stainless steel tubing fittings shall conform to ASTM A 774, grade and schedule or wall thickness as specified for tubing.

2.2.3.3 Stainless Steel Tubing Joints

Stainless steel tubing joints shall be shop welded full penetration butt joints or Van Stone joints using angle face rings with backing flanges drilled in accordance with ASME B16.5, Class 125.

2.2.4 Pipe Hangers and Supports

Pipe hangers and supports shall conform to MSS SP-58 and MSS SP-69.

2.2.5 Valves

2.2.5.1 Butterfly Valves

Butterfly valves and operators shall conform to the requirements of Section 15102, AIR SERVICE VALVES.

2.2.5.2 Relief and Unloading Valves

Combination relief and unloading valve shall be carbon steel body, shall allow blower unloading for startup, and shall be set for pressure relief at 9.0 psig.

2.2.5.3 Check Valves

Check valves shall be double door type, flange or wafer style, capable of handling 125 psig cold working pressure (CWP) with cast iron body and aluminum bronze internal parts, low torque spring for low pressure air service. Seal material shall be capable of handling temperatures from minus 20 degrees F to plus 250 degrees F with tight shutoff capability.

2.2.6 Expansion Couplings

Expansion couplings for nonsubmerged locations in the aeration system shall be constructed of EPDM and other materials suitable for temperatures up to 350 degrees F and pressures up to 15 psig. Couplings shall be of the filled arch type. Back-up or retaining rings shall be provided as required. Couplings shall be yoked to transmit tension loadings. Compressive and lateral movement of the joint shall not be impaired by the yoke system.

2.3 AIR-SUPPLY EQUIPMENT

The air-supply shall consist of rotary positive displacement air blowers and drive units with filters, controls, and appurtenances as indicated or specified.

2.3.1 Positive Displacement Blowers

2.3.1.1 Performance and Design Requirements

Blowers shall be positive displacement rotary, oil-free types, designed for continuous duty. Performance and design requirements shall be as shown.

2.3.1.1.1 Suppliers Qualification

a. Blowers, motors and accessories supplied by a single manufacturer.

b. Experienced in manufacture of this equipment.

2.3.1.1.2 Job Conditions

a. Elevation above sea level: 4300 feet

b. Summer Temperature: 100 degrees F

c. Winter Temperature: 50 degrees F

2.3.1.1.3 Performance and Design Requirements

a. Sequencing Batch Reactor (SBR) Blowers

(1) Number of Units: 3

(2) Design Capacity: 1118 SCFM, 75HP

(3) Discharge pressure at site elevation and 100 degrees F: 8.4 psig

(4) Machines to be parallel to give double air flow rate at 2235 SCFM

b. Aerobic Digester Basin Blowers

(1) Number of Units: two (2)

(2) Design Capacity: 372 SCFM, 25 HP

(3) Discharge pressure at site elevation and 100 degrees F: 8.4 psig

2.3.1.1.4 Noise Limitation

a. Each blower, motor, inlet and discharge silencer shall be enclosed in a sound control enclosure.

b. Enclosures shall be a standard design and be supplied by the blower manufacturer.

c. Enclosure shall allow for easy access to the motor and blower for all routine maintenance and adjustments.

d. As on installed unit, the blower/motor/silencers/enclosure shall be designed and constructed such that the unit will not produce more than 90.2 dBA of noise as determined by standard free field test (at 1 meter).
   (1) Manufacturer must provide test results of units similar to those to be supplied which demonstrate that the noise limitations will be achieved.

   (2) Manufacturer must certify that units to be supplied will meet this noise limitation.

2.3.1.2 Casing

Blower casing shall be one piece with separate head plates and shall be of close-grained cast iron, suitably ribbed to prevent distortion under the specified operating conditions. Casing shall be fabricated with lifting eyes for installation and maintenance purposes.

2.3.1.3 Impeller and Shaft

The impeller and shaft shall be a common ductile iron casting. Impellers shall be of the straight, two-lobe involute type and shall operate without rubbing, liquid seals, or lubrication. Peak vibration velocity of blower shall be less than 0.30-inch per second.

2.3.1.4 Timing Gears

The impellers shall be positively timed by a pair of machined, heat-treated, spur tooth timing gears. Timing gears shall be mounted on the impeller shafts on a tapered fit and secured by a locknut.

2.3.1.5 Bearings

Each impeller shaft shall be supported by anti-friction roller bearings sized for a minimum L-10 life of 50,000 hours as defined by AFBMA 9 or AFBMA 11.

2.3.1.6 Seals

A lip type oil seal shall be provided at each bearing to prevent lubricant from leaking into the air stream. Labyrinth seals shall be provided at the point where the shaft passes through the head. Ventilation of the impeller side of the oil seals to atmosphere shall be provided to eliminate any carry-over of lubricant into the air stream.

2.3.1.7 Lubrication

Drive and bearings shall be splash oil lubricated. Timing gears and gear end bearings shall be splash oil lubricated. Oil level shall be regulated by a metering orifice.

2.3.2 Drive Connection

The blower shall be connected to the motor by a V-belt drive capable of transmitting the motor power to the blower. Additional sheaves shall be provided so that the blowers output can be varied in 40 cfm increments between minimum and maximum flow conditions. The drive shall be covered with an acoustically treated sheet metal guard.

2.3.3 Motors

Motors shall be sized to be within their rated load under the specified operating conditions. Motors shall conform to NEMA MG 1 and shall be the squirrel cage induction Type NEMA Design B, Class B or F insulated, with a service factor of not less than 1.15. Motors shall be horizontal foot-mounted, totally enclosed fan-cooled, cast iron or aluminum construction and shall be a quiet series type with a noise level not exceeding 80 dB (A Scale). The motor frame shall be the standard NEMA assigned frame size supplied for constant speed use on full voltage, fixed frequency line power. Resistance temperature detectors (RTD's) embedded in two phases of the stator windings shall be provided. Motor bearing shall have minimum L-10 life of 50,000 hours.

2.3.4 Power Factor Capacitors

All motors over 5 hp shall be provided with power factor correcting capacitors. Capacitors shall be furnished complete with internal fusing and bleed-off resistors. Corrected power factor shall be not less than 95 percent at full load. Capacitors shall be installed in enclosures coordinated with the individual motor construction with leads terminated in the motor terminal box and identified as capacitor leads. Motor controls shall have overcurrent device settings properly reduced for the motor and capacitor combination.

2.3.5 Blower - Motor Base

A full length common base of steel box construction shall be provided for the blower and drive. The base shall be suitable for direct attachment to the foundation. Anchor bolts, and grout shall be provided as required for proper installation.

2.3.6 Concrete Foundation

Concrete foundation shall be as indicated. The foundation shall be entirely separated from the surrounding floor. Concrete shall be as specified in Section 03300 CONCRETE FOR BUILDING CONSTRUCTION.

2.3.7 Filters

Filters shall be washable dry type, and shall be at least 90 percent efficient when tested in compliance with ASHRAE 52 dust spot method. Filter shall have at least 1 sq. ft. of filter area per 25 cfm of air flow. Air filter material shall be polyester felt with 1-inch pleat separation. For filters located outside of the building, a weather hood designed to keep rain, snow, and other foreign articles away from the filter element shall be provided. The weather hood shall be designed for inlet velocities between the hood and the filter element of 500 ft/min or less. A manometer or differential pressure gauge shall be provided on the filter unit to indicate when the filter element requires cleaning or replacing.

2.3.8 Accessories

2.3.8.1 Silencers

Each blower shall be provided with concentric shell inlet and discharge silencer inside one body. Silencers shall be for standard grade silencing. Silencer size shall be as recommended by the silencer manufacturer and shall be compatible with the blower requirements. Silencer connections shall match the adjacent piping. Mounting brackets shall be provided as required for silencer support. Silencer shall be constructed of heavy-duty rolled and welded steel plate with inner liner properly welded to outer shell for purpose of deadening outer shell.

2.3.8.2 Gauges

Gauges shall comply with ASME B40.1. Inlet gauges shall have a range of 0 to 30 inches water gauge vacuum. Outlet gauges shall have a range of 0 to 15 psi. Gauges shall include all accessories for control panel mounting.

2.3.8.3 Thermometers

Thermometers shall be provided to indicate discharge air temperature, lubrication oil temperature. Thermometers shall be either red-reading mercury-in-glass type or dial type. Scale range shall include full range of expected operation and up to 125 percent, but not more than 150 percent of maximum.

2.3.8.4 Temporary Screens

A temporary screen, consisting of 16-mesh wire backed up by 1/4-inch hardware cloth, shall be provided at the blower inlet connection. The screens shall be removed after initial blower start-up and testing.

2.3.8.5 Inlet and Discharge Elbows

Inlet and discharge elbows shall be of the long sweep type constructed of cast iron with ASME B16.1, Class 125 flanges.

2.3.8.6 Expansion Couplings

Couplings shall be extra heavy gauge rubber, wire reinforced type suitable for temperature range of minus 20 degrees F to plus 250 degrees F and pressure range from 15 inches of mercury vacuum to 15 psig.

PART 3 - EXECUTION

3.1 EQUIPMENT INSTALLATION

3.1.1 Blower Installation

Blowers shall be installed as indicated and in accordance with the manufacturer's written instructions.

3.2 FIELD TESTING

3.2.1 Blower Test

After the air distribution and diffusion systems have been installed, each blower shall be tested at the specified operating conditions to determine compliance with the specifications and proper operation.

3.3 PAINTING

Field painting shall be as specified in Section 09900 PAINTING, GENERAL.

3.4 MANUFACTURER'S SERVICES

Services of a manufacturer's representative who is experienced in the installation, adjustment, and operation of the equipment specified shall be provided. The representative shall supervise the installation, adjustment, and testing of the equipment.

3.5 FRAMED INSTRUCTIONS

Framed instructions containing wiring and control diagrams under glass or in laminated plastic shall be posted where directed. The instructions shall show wiring and control diagrams and complete layout of the entire system. The instructions shall also include, in typed form, condensed operating instructions explaining preventive maintenance procedures, methods of checking the system for normal safe operation and procedures for safely starting and stopping the system. The framed instructions shall be posted before acceptance testing of the system.

3.6 FIELD TRAINING

Field training courses shall be conducted in conjunction with field training courses for Sequencing Batch Reactor as specified in SECTION 11390 - SEQUENCING BATCH REACTOR PROCESS EQUIPMENT.

- - o 0 o - -

SECTION 11378 - DUPLEX BASKET STRAINERS

PART 1 GENERAL

1.1 WORK INCLUDED

1.1.1 Furnish and install heavy duty duplex basket strainers.

1.2 SUBMITTALS

The following shall be submitted in accordance with Section 01300 - SUBMITTALS:

SD-01, Data

Materials and Equipment

Manufacturer's descriptive data and technical literature and installation instructions. Data shall include a complete list of parts and supplies, with current unit prices and source of supply.

SD-13 Certificates

Certifications

Furnish certification of compliance with design requirements for maximum pressure drop through units. Furnish certification for hydrostatic pressure testing of units at factory.

SD-19, Operation and Maintenance Manuals

Duplex Basket Strainers

Six complete copies of operating instructions for system operation and maintenance instructions listing routine maintenance procedures.

1.3 QUALITY ASSURANCE

1.3.1 Basket strainers and all accessories shall be furnished by a single manufacturer who is fully experienced and qualified in the design and manufacture of such equipment for the conditions of service specifically scheduled in this section and who has at least ten (10) successfully operating installations in the United States.

1.4 DESIGN REQUIREMENTS

1.4.1 Specifically designed for screening the fluid scheduled at the end of this Section.

1.4.2 Maximum pressure drop through clean screen including mesh liner at rated flow: see schedule at the end of this Section.

1.4.3 Strainer and all appurtenances specifically designed for the working pressures scheduled at the of the Section.

PART 2 PRODUCTS

2.1 MATERIAL AND FABRICATION

2.1.1 Strainer Body and Covers:

2.1.1.1 All cast iron construction.

2.1.1.2 Yoke-type bolted, quick opening covers or, bolted covers complete with cover lift davit to assist in lifting covers weighing over 40 lbs.

2.1.1.3 Connection flanges: Standard ANSI flanges sized for the working pressures scheduled at the end of this Section.

2.1.1.4 Drains: Tapped and plugged drain furnished for each chamber.

2.1.2 Basket and Mesh Liners

2.1.2.1 Baskets: Fabricated of perforated steel metal material as scheduled at the end of this section, with perforations in a staggered pattern, with integral lifting handle.

2.1.2.2 Mesh liners: Woven wire mesh of the size and material scheduled at the end of this Section.

2.1.2.3 Required gross area for basket of mesh liners: Sufficient gross area provided for each strainer chamber such that the net open area of the basket or mesh liner shall be not less than four (4) times the inlet pipe area.

2.1.3 Strainer Chamber Isolation Valves

2.1.3.1 For strainer size 1-inch through 8-inch: Tapered bronze diverter plug with integral lifting jack to facilitate plug rotation.

2.1.3.2 For strainer sizes 10-inch through 36-inch: Either of the following two (2) designs may be used.

a. Via four (4) butterfly valves designed to achieve bubble-tight shut-off at rated pressure, featuring an integral mechanical linkage to facilitate simultaneous operation of all four vales through a single geared handwheel, or;

b. Via two (2) sliding gates designed to achieve bubble-tight shut-off at rated pressure, with cast iron valve discs and replaceable valve seats, featuring a handwheel-and-chain drive gate positioner.

PART 3 EXECUTION

3.1 INSTALLATION

3.1.1 Install per Manufacturer's Recommendations.

3.2 SCHEDULE

3.2.1 Fluid to be strained: Clarified wastewater effluent having an average Total Suspended Solids content of 20 mg/L or less.

3.2.2 Washwater System

3.2.2.1 Number of units: One(1)

3.2.2.2 Inlet pipe size and connection: 4-inch flanged

3.2.2.3 Working pressure: 150 psi

3.2.2.4 Design flow: 100 gpm

3.2.2.5 Basket material: #22 gauge 316 stainless steel with 1/32-inch diameter perforations

3.2.2.6 Maximum pressure drop through clean strainer: 3.0 psi at design flow

- - o 0 o - -

SECTION 11390 - SEQUENCING BATCH REACTOR PROCESS EQUIPMENT

PART 1 - GENERAL

1.1 REFERENCES

AMERICAN SOCIETY FOR TESTING AND MATERIALS (ASTM)

ASTM A 48	(1993A) Gray Iron Castings
ASTM A 126	(1993) Gray Iron Castings for Valves, Flanges, and Pipe Fittings
ASTM A 395	(1988) Ferritic Ductile Iron Pressure-Retaining Castings for Use at Elevated Temperatures

1.2 SUBMITTALS

SD-01, Data.

Sequencing Batch Reactor Equipment

A complete list of equipment and materials, including manufacturer's descriptive data and technical literature, performance charts and curves, catalog cuts and installation for the equipment submitted in the Bid Proposal "Qualification Package".

SD-04, Drawings.

Sequencing Batch Reactor Equipment.

Drawings containing complete wiring and schematic diagrams and any other details required to demonstrate that the system has been coordinated and will properly function as a unit. Drawings shall show proposed layout and anchorage of equipment and appurtances, and equipment relationship to other parts of the work including clearances for maintenance and operation.

SD-06, Instructions.

Proposed diagrams, installation instructions, and other sheets regarding special notices and material safety data concerning impedances, hazards, and safety precautions.

SD-09, Reports.

Field Testing and Adjusting Equipment.

Performance test reports in booklet form showing all field tests performed to adjust each component and all field tests performed to prove compliance with specified performance criteria, upon completion and testing of installed system. Each test report shall indicate the final position of controls.

SD-10, Design Analysis and Calculations

SBR Design and Functions

Design analysis and supporting calculations performed in support of the SBR system and components, including but not limited to; diffused aeration equipment, transfer pumps, mixers, decanters and controls.

SD-19, Operation and Maintenance Manuals.

Sequencing Batch Reactor Equipment.

Six (6) copies of operation and six (6) copies of maintenance manuals for

the equipment furnished. One complete set prior to performance testing and the remainder upon acceptance.

SD-31 Detail Drawings

Sequencing Batch Reactor Equipment

Detail drawings consisting of fabrication and assembly drawings for all parts of the work in sufficient detail to enable the Government to check conformity with the requirements of the Contract Documents.

SD-40, Listing of Product Installations.

A listing of a minimum of ten installations where units similar to those proposed for use have been installed and have been in successful service for a minimum of five years. The list shall include purchaser, address of installation, service organization, and date of installation.

SD-76, Certificates of Compliance.

The material supplier's, or equipment manufacturer's, statement that the supplied material or equipment meets specified requirements. Each certificate shall be signed by an official authorized to certify in behalf of material supplier or product manufacturer and shall identify quantity and date or dates of shipment or delivery to which the certificates apply.

1.3 BASIS OF DESIGN

Unless otherwise indicated, design of the project is based on the Manufacturer listed as the "Basis of Design". The Engineer has performed an evaluation of the Basis of Design Manufacturer for compliance with the requirements of the Contract Documents. Use of any other manufacturer may require modifications or adjustments, at the contractors expense, to coordinate the installation of the furnished equipment with associated elements of work, such as piping and electrical connections, or support and mounting provisions.

The Basis of Design for this project is the AquaSBR System as manufactured by Aqua-Aerobic Systems, Inc, 6306 N. Alpine Road, Rockford, IL 61111.

All other Manufacturers wishing to submit a system offering for this project are required to comply with the Qualification Package section of this specification.

1.3.1 QUALIFICATION PACKAGE

1.3.1.1 All Bidders shall submit <u>with the Bid Proposal</u> a "Qualification Package". The Bidder shall submit each Qualification Package under separate cover. Each Qualification Package shall be bound with protective cover, identify the specification section number and title, and the product manufacturer's name on a cover sheet. The Bidder shall submit all Qualification Packages in a sealed sturdy box or suitable container with the Bid Proposal Form attached to or enclosed in the box or container.

1.3.1.2 A Qualification Package is required for evaluation of the proposed system. As a minimum, the following information is required:

1.3.1.2.1 The manufacturer shall certify that their experience includes a minimum of ten installations where identical equipment has been in operation successfully in a similar process for a minimum of five years.

1.3.1.2.2 As a minimum, the manufacturer shall certify they are the manufacturer of the following components: mixing system, scum re-entrainment system, decanter, aeration system and SBR controls.

1.3.1.2.3 A complete set of drawings, specification, cut-sheets and detailed descriptive material of proposed equipment items or products. This information shall identify all technical and performance requirements stipulated in the specifications.

1.3.1.3 As a minimum the proposed system shall meet or exceed the following mechanical requirements:

1.3.1.3.1 All equipment shall be accessible from the top of the basin.

1.3.1.3.2 The system shall be capable of routine maintenance and inspection of equipment without dewatering the basin.

1.3.1.3.3 All equipment shall be located or capable of being brought to the side of the basin to allow for servicing and inspection.

1.3.1.3.4 If retrievable equipment is not provided, a minimum of three basins are required. In the event that more than two basins are required, an independent blower and mixing system must be provided for each basin.

1.3.1.3.5 The aeration blowers shall be designed to provide 100% of the total air requirements with one unit out of service. The remaining components of the aeration system shall be capable of providing a minimum of 50% of the total air requirements to the basin during aeration system servicing.

1.3.1.3.6 For the purpose of energy conservation and process control, the system shall be capable of complete mix at a minimum MLSS concentration of 4,500 mg/l at the high water level without the introduction of air.

1.3.1.3.7 Pumping systems utilized for mixing must be located external to the basin and include a fully automatic back flush system.

1.3.1.3.8 Pumping systems utilized for mixing must include electromagnetic flow meters of the same size as the distribution header. The output of the electromagnetic flow meter shall be connected to the PLC control system to prevent the blowers from running when the pumps are malfunctioning.

1.3.1.3.9 Two positive means of sealing the decanter shall be provided.

1.3.1.3.10 The decanter shall be floating with subsurface withdrawal.

1.3.1.3.11 The decanter shall be accessible from the side of the basin.

1.3.1.3.12 No hydraulic profile changes will be permitted.

1.3.1.3.13 A means of re-entraining the surface scum must be provided.

1.3.1.4 List showing materials of construction of all components.

1.3.1.5 Manufacturer's recommended spare parts list with pricing guaranteed through the duration of the contract plus one year warranty after acceptance by the owner.

1.3.1.6 Information on equipment field erection requirements and estimated installation hours.

1.3.1.7 A maintenance schedule showing the required maintenance, frequency of maintenance, lubricants and other items required at each regular preventative maintenance period. The maintenance schedule shall include SBR basin dewatering and storage requirements if equipment is not retrievable.

1.3.1.8 Process equipment electrical requirements and schematic diagrams.

1.3.1.9 Detailed written documentation with discussion of all deviations of equipment from the contract documents.

1.3.1.10 One complete O & M required for the proposed equipment.

1.3.1.11 Complete Installation List complete with plant location, design flow and loadings, plant design discharge quality, design engineer, firm, owner, manager, operator, superintendent, and telephone number for each.

1.3.1.11.1 Identify which plants on the installation list meet the experience requirements of the Specification and meet or exceed the design flow and load of the proposed plant.

1.3.1.11.2 Identify a minimum of at least three successful installations in the United States producing an effluent containing less than, or equal to, that specified for this project.

1.3.1.12 Copy of the SBR system manufacturer's guarantee of the treatment process and equipment for one year starting after successful completion of start-up and acceptance by the owner.

1.3.1.13 As a minimum, the proposed system shall meet the process performance sections of the Basis of Design system.

1.3.1.13.1 Provide System Manufacturer's process design analysis consisting of the following:

a. The system shall be designed to accommodate the peak design flow condition without shortening of cycles.
b. Tank volume sizing.
c. Selection of design food to mass ratio and acceptable F:M range along with empirical and experimental data to justify the selected values.
d. The design sludge retention time and an acceptable operating range along with empirical and experimental data to justify the selected value.
e. The design actual oxygen required and standard oxygen required along with the values used for alpha and beta.
f. The design standard oxygen transfer efficiency along with empirical and experimental data to justify the selected value.
g. The design decanter sizing and velocity pattern within the SBR tank, along with the decant volumetric flow rate as a function of liquid level in the SBR assuming free discharge.
h. Provide mixer sizing along with empirical and experimental data to justify selection. The mixer shall provide complete mix without the introduction of air.
i. Provide reference material and complete design calculations on reaction rates for nitrification and denitrification as well as phosphorous removal (if applicable) along with oxygen demand, including kinetic values for metabolic respiration and endogenous respiration. This information is required to show justification for cycle times and motor operation requirements.
j. Design calculations used to determine the necessary power requirements over the full operating range of 25% to 100% of design flow.
k. Design calculations must be stamped by an on staff registered professional engineer.

1.3.1.14 The manufacturer and contractor must provide a notarized letter with the bid signed by a company officer certifying the following:

1.3.1.14.1 "(Company Name) hereby certifies that all of the requirements of Section 11390 SEQUENCING BATCH REACTOR PROCESS EQUIPMENT, Paragraph 1.3.1 are included in the Qualification Package. (Company Name) also certifies that all of the necessary structural, electrical, instrumentation, and mechanical drawing

revisions required have been provided with the bid. (Company Name) will be financially responsible for any additional changes as a result of our omissions.

1.3.1.14.2 (Company Name) also certifies that the process design submitted will be accepted by the State of New Mexico for this project."

1.3.1.15 The Bidder's price must include an allowance of $20,000 (twenty thousand dollars) for engineering review of the Qualification Package.

1.3.1.16 All work to revise the Contract Documents, in the event of acceptance of the proposed system shall be prepared under the responsible charge of a licensed New Mexico Professional Engineer with experience in the design of Wastewater Treatment Facilities. Bidder shall submit with his bid the name and the qualifications of the Engineer selected by the Bidder. It is understood that the Bidder's Engineer will accept design responsibility for any and all alterations made.

1.3.1.17 A Basis of Design Engineer's Report signed and sealed shall be prepared by the Bidder's Engineer for submission with the Bid for evaluation purposes.

1.3.1.18 If the Bidder fails to furnish all of the preceding information which has been deemed necessary to evaluate the proposed system for equivalency with the "Basis of Design" system, the proposed qualification package will be rejected. If the qualification package is rejected, the Bidder shall furnish the "Basis of Design" equipment for the installed price of the alternate system as quoted by the Bidder.

1.3.1.19 No proposed equipment item or product will be considered unless, in the opinion of the Contracting Officer, it conforms to the Contract Documents in all respects.

1.3.1.20 The Contracting Officer shall be the sole authority for determining conformance of a proposed system item or product with the Contract Documents.

1.4 QUALIFICATIONS

Procedures and welders shall be qualified in accordance with the code under which the welding is specified to be accomplished.

1.5 QUALITY ASSURANCE

Sequencing Batch Reactor (SBR) and all related equipment including diffused aeration equipment, transfer pumps, mixers, decanters, and controls are to be supplied by a single manufacturer.

The SBR manufacturer is also responsible for supplying the positive displacement blowers in accordance with specification Section 11375 AIR SUPPLY EQUIPMENT FOR SEWAGE TREATMENT.

1.6 DELIVERY AND STORAGE

All equipment delivered and placed in storage shall be stored with protection from the weather, excessive humidity and excessive temperature variation; and dirt, dust, or other contaminants.

PART 2 - PRODUCTS

2.1 GENERAL MATERIAL AND EQUIPMENT REQUIREMENTS

2.1.1 Standard Products

Materials and equipment shall be the standard products of a manufacturer regularly engaged in the manufacture of such products and shall essentially duplicate items that have been in satisfactory use at least 2 years prior to bid opening. Equipment shall be supported by a service organization that is, in the opinion of the Contracting Officer, reasonably convenient to the site.

2.1.2 Nameplates

Each major item of equipment shall have the manufacturer's name, address, type or style, model or serial number, and catalog number on a plate secured to the item of equipment.

2.1.3 Special Tools

One set of special tools, calibration devices, and instruments required for operation, calibration, and maintenance of the equipment shall be provided.

2.1.4 Factory Painting

Unless otherwise specified, all equipment shall be cleaned, primed, and given two coats of machinery enamel at the factory. Fiberglass, stainless steel, and galvanized components need not be painted.

2.2 SBR DESIGN AND FUNCTIONAL REQUIREMENT

2.2.1 The manufacturer of the SBR system shall be completely responsible for the proper design of their system, including but not limited to; diffused aeration equipment, transfer pumps, mixers, decanters, and controls. All equipment shall perform as specified and the completed installation shall operate in accordance with the requirements of the plans and specifications.

2.2.2 The aeration system is defined as the aeration device working in conjunction with a mixer. The aeration system shall be designed to provide oxygen distribution to the entire basin. It shall also ensure mixing to promote suspension of all biological solids in the basin without the introduction of air. The velocity and mixing in the basin shall be sufficient to ensure complete biological solids suspension and dispersion.

2.2.3 The aeration system for the aeration basins shall be capable of providing mixing such that when operated under any combination of the specified design conditions it shall suspend all biological floc and mixed liquor suspended solids throughout the liquid mass in each basin. The aeration system shall further be capable of maintaining complete aerobic conditions and suspension of all biological floc and suspended solids throughout the liquid mass in each basin.

2.2.4 The aeration system shall be designed to operate within a minimum of 13.0 feet and a maximum of 18.0 feet side water depth and shall be capable of transferring a minimum of 193.8 lbs/hr of process oxygen (A.O.R.) into the wastewater.

2.2.5 The jobsite conditions are:

2.2.5.1 0.750 MGD Avg. daily flow 1.130 MGD Peak daily flow

2.2.5.2 Design Loadings	Influent	Effluent
BOD	250 mg/l	30 mg/l
TSS	295 mg/l	30 mg/l
TKN	35 mg/l	--- mg/l
Total N	--- mg/l	10 mg/l

2.2.5.3 Wastewater temperature 50 °F to 79 °F

2.2.5.4 Jobsite elevation 4300 feet MSL

2.2.5.5 Ambient air temperature 30 °F to 100 °F

2.2.5.6 Alpha (maximum value allowed) 0.85

2.2.5.7 Beta (maximum value allowed) 0.95

2.2.5.8 F/M ratio 0.07 lb BOD5/lb MLSS

2.2.5.9 MLSS concentration at low water level 4500 ppm

2.2.5.10 Cycles 5 /day/basin

2.2.5.11 Oxygen Requirements 1.5 lbs O2/lb BOD5 applied
4.6 lbs O2/lb TKN applied

2.2.5.12 Aeration 1.73 hrs/cycle
Mixing 2.23 hrs/cycle

2.2.5.13 Minimum Oxygen Transfer Efficiency (Standard Conditions) 1.0 %/foot of diffuser submergence

2.2.5.14 Diffuser submergence 15.3 feet

2.2.6 SBR STRUCTURE

The SBR system shall be field erected in two (2) basins as shown on the contract drawings:

2.2.6.1 Inside Dimensions: 55 ft. x 55 ft.

2.2.6.2 Side Water Depth:

Minimum Operating Level: 13.0 ft. SWD
Maximum Operating Level: 18.0 ft. SWD
Freeboard: 2 ft.
Top Of Wall: 20.0 ft.

2.2.7 INFLUENT PLUG VALVE

2.2.7.1 Furnish one (1) 14 inch diameter electrically operated flanged plug valve for each basin to control the influent flow.

2.2.7.2 Valves shall conform with the requirements of Section 15101 PLUG VALVES.

2.2.7.3 Valve operators shall conform with the requirements of Section 16948 ELECTRIC VALVE ACTUATORS.

2.2.8 BASIN MIXER

2.2.8.1 Furnish one (1) mechanical floating mixer and related equipment accessories as described herein for each basin. Each mixer shall consist of a motor, direct-drive impeller driven at a constant

speed, an integral flotation unit, and impeller volute. The impeller shall be designed to pump the liquid from near the surface and direct it down toward the vessel/basin bottom. The mixer shall be capable of being reversed to cause backflow liquid movement without causing damage to the mixer chassis and without causing upflow liquid damage to the motor bearing and windings.

2.2.8.2 No liquid spray or other liquid leakage upward onto the surface of the motor support surface or flotation chassis will be allowed at any time.

2.2.9 Performance

2.2.9.1 Each mixer shall have a zone of complete mix of 55 feet square at 18 feet water depth and a direct pumping rate of 8,690 GPM with a recirculation rate of 287,000 GPM and a basin turnover of 1.4 minutes at maximum water level. Complete mix shall be defined as maintaining biological suspension of all mixed liquor suspended solids with an MLSS of 4500 mg/l or less without the introduction of air.

2.2.10 Mixer Drive Motor

2.2.10.1 The motor shall be rated for 15 horsepower at 900 RPM and wired for 460 volt, 60 hertz, three phase service. The motor shall be standard efficiency, vertical P base design, totally enclosed fan cooled (TEFC), and rated for severe duty. The motor shall in all cases equal or exceed standard NEMA specifications. The motor winding insulation shall in all cases equal or exceed NEMA Class F rating and shall be nonhygroscopic. A minimum service factor of 1.15 shall be furnished.

2.2.11 Motor Mounting Base

2.2.11.1 The motor shall be securely mounted onto a solid 304 stainless steel base which is integral with the motor base extension. All submersed wetted motor mounting base components shall be constructed of 304 stainless steel.

2.2.11.2 The upper portion of the motor mounting base, immediately below the lower motor bearing, shall include two independent acting air seals. One seal shall contact the rotating motor shaft extension and shall not require scheduled lubrication or maintenance. The second seal shall consist of one stationary and one moving component. These two seals shall be capable of sealing off the flow of air from the suction action of the pumped flow and prevent backflow of liquid during impeller reversal.

2.2.12 Impeller Shaft

The mixer motor shall have a one-piece motor shaft continuous from the top motor bearing through the lower bearing, and down to and through the impeller. This shaft shall be manufactured from 17-4 PH stainless steel having a minimum yield strength of 100,000 psi.

2.2.13 Flotation

Each unit shall be equipped with a modular float constructed of fiberglass with a central float passage of a size to allow installation and removal of the pump impeller. The minimum diameter of the float shall be 84 inches and the minimum thickness shall be 12.25 inches. The float shall be foamed full of polyurethane foam of the closed cell type, and shall be totally sealed to prevent the foam from being in contact with the external environment.

2.2.14 Re-Entrain Flow Skimmer Weir

2.2.14.1 Integral to the mixer float shall be a 304 stainless steel circular weir trough having as its innermost wall the exterior wall of the flotation section. This weir trough shall be equipped with an adjustable "V" notch weir plate constructed of polyethylene of not less than 3/16" thick, and integral drop box. The weir plate shall be attached to the trough with 304 stainless steel fasteners.

2.2.14.2 A 115 volt, single phase, 60 hertz electrically operated linear actuator shall be provided for skimmer operation. Electrical cable from the skimmer actuator to a local skimmer operator control station shall be provided.

2.2.15 Local Control Station

A 115 volt, single phase, 60 hertz skimmer operator control station with OPEN/CLOSED selector switch and indicator lights in a NEMA 4 enclosure shall be provided for each mixer.

2.2.16 Impeller

The impeller shall be a precision casting of 316 stainless steel and shall be specifically designed for the application intended. It shall be dynamically and hydraulically balanced.

2.2.17 Intake Volute Assembly

The impeller shall operate in a volute made of 304 stainless steel plate, minimum 3/16" thick.

2.2.18 Vibration

The impeller and rotor unit shall be dynamically balanced as a completed assembly and as an integral unit with the motor mounting base to a vibrational level not to exceed 2.0 mils at the motor RPM.

2.2.19 Pivotal Mooring System

A pivotal mooring system shall be supplied for each unit consisting of a 304 stainless steel mooring arm extending from the basin sidewall to the unit. The pivotal mooring system including; adhesive anchors, mooring cable, clips, thimbles, and quick disconnects shall be supplied as shown on the drawings to assure a consistent location within the basin. Hardware and adhesive anchors shall be 304 stainless steel.

2.2.20 Pivotal Mooring Electrical Power Cable

Electrical cable shall be supplied with cable grips at the motor and basin wall terminations. Electrical cable shall be attached to the mooring arm with cable ties provided by the equipment manufacturer.

2.2.21 DECANTER ASSEMBLY

Furnish one 8 X 7 mechanical floating decanter and related equipment accessories as described herein for each basin. Each decanter shall consist of an integral flotation unit, a stainless steel movable weir assembly, and an electric motor-driven operator to open and close the weir.

2.2.21.1 Performance

Each decanter shall be capable of withdrawing decant fluid from 4-6 inches beneath the liquid surface, regardless of liquid depth, down to the minimum allowable water level specified below. The decant liquid shall be drawn through an adjustable weir opening of 2-6 inches. The weir shall be

circular in shape and permit liquid to enter the decanter from the entire 360 degrees without obstruction.

Maximum allowable water level in the basin is 18 ft.
Minimum allowable water level in the basin is 13 ft.

Each decanter shall be rated for an average flow of 2,100 gallons per minute (± 10%).

2.2.21.2 Weir Actuator

Weir actuator shall include a reversible electric motor operated linear actuator. The actuator shall be capable of operating with a closing force of 1500 lbs. and shall operate from a 115 volt, single phase, 60 hertz source. Adjustable limit switches shall be included to permit adjustment of the weir opening. A coil spring shall be included to provide for travel after the weir has closed and provide desired closure pressure. A corrosion resistant removable cover shall be included to provide protection to the actuator and motor during normal operation. The power section is painted steel.

2.2.21.3 Weir

2.2.21.3.1 The weir shall be constructed of 304 stainless steel, be circular in shape, and shall include vortex control baffles permanently affixed to the weir. The weir shall be attached to the actuator through a removable single shaft which shall also function as the torque restraint.

2.2.21.3.2 A 304 stainless steel orifice plate for flow control shall be included within the decanter assembly.

2.2.21.4 Flotation

2.2.21.4.1 Each unit shall be equipped with a modular float constructed of fiberglass stainless steel filled with closed cell polyurethane foam having a minimum 2.0 lbs./ft^3 density. Float shall be completely sealed to prevent the foam from being in contact with the external environment. Float shall have 875 lbs. reserve buoyancy to ensure stability and to provide support flotation required during decanter servicing.

2.2.21.4.2 A urethane type seal shall be molded into the bottom of the float assembly to receive the decanter weir.

2.2.21.5 Decanter Discharge Pipe

2.2.21.5.1 Each decanter shall be attached to the basin wall by a 12" diameter discharge pipe constructed of Schedule 80 PVC complete with 304 stainless steel flanged flexible joints.

2.2.21.6 Decanter Restrained Mooring System

2.2.21.6.1 Each decanter shall include a galvanized steel mooring frame attached to the float. One 4" diameter Schedule 40 galvanized steel mooring post assembly with base plate shall be provided to assure consistent location of the decanter in the basin. Mooring post shall be filled with concrete by the installing contractor.

2.2.21.6.2 Galvanized steel dewatering support posts consisting of three - 4" diameter Schedule 40 vertical pylons with base plates shall be provided. Each support with base plate shall be affixed to the basin floor with 304 stainless steel adhesive anchors.

2.2.22 DECANT FLOW CONTROL VALVE

2.2.22.1 Furnish one 12" inch diameter electrically operated butterfly valve for each basin to control the decant rate.

2.2.22.2 Valve shall be lugged style butterfly valve with ASTM-126 Class B cast iron body, EPDM seat, ASTM A-395 ductile iron/nickel plated disk, one piece AISI grade 416 stainless steel shaft.

2.2.22.3 Valve operators shall conform with the requirements of Section 16948 ELECTRIC VALVE ACTUATORS.

2.2.23 AERATION SYSTEM

2.2.23.1 The aeration system shall be a coarse bubble diffused air system and shall be a retrievable configuration as shown on the contract drawings.

2.2.23.2 The aeration system shall be capable of delivering 2,235 SCFM per basin.

2.2.24 RETRIEVABLE COARSE BUBBLE DIFFUSER ASSEMBLIES

2.2.24.1 The aeration system shall be a coarse bubble diffused air system and shall be a retrievable configuration as shown on the contract drawings.

2.2.24.2 Furnish 7 retrievable air diffuser assemblies for each basin. Each assembly shall consist of diffusers, diffuser manifold, track/beam, flexible air line, isolation valve, and lifting mechanism.

2.2.24.3 A total of 10 diffuser tubes shall be provided for each diffuser assembly. Each diffuser shall consist of an end connection, air reservoir, air release ports, and an open bottom constructed so materials cannot lodge in the body of the diffuser. The diffuser shall be constructed of 304 stainless steel and shall include an integral hex nut and NPT male threads. Each diffuser assembly shall provide a uniform air distribution.

2.2.24.4 The diffusers shall be connected to a diffuser manifold constructed of galvanized steel. The entire assembly shall be located such that each diffuser centerline is twelve (12) inches above the basin floor.

2.2.24.5 Each diffuser assembly shall include a 3" diameter wire reinforced neoprene flexible air line with fiberglass reinforced nylon end fittings and 90° aluminum quick disconnect cam with 304 stainless steel handle.

2.2.24.6 A 3" diameter manually operated isolation butterfly valve shall be provided for each diffuser assembly for connection to the main air distribution piping. Valve shall conform with the requirements of Section 15102 AIR SERVICE VALVES.

2.2.24.7 The vertical track/beam assembly and intermediate supports shall be galvanized steel. The vertical track/beam shall support the manual lifting mechanism assembly during operation and servicing.

2.2.24.8 A manual lifting mechanism shall be provided for each retrievable diffuser assembly. Each lifting mechanism shall consist of polyolefin guide wheels, enamel coated cast iron sheave with bronze bushing, 304 stainless steel lifting cable, and manual winch with enamel coated cast iron case and drum. The lifting mechanism shall be of sufficient design capacity to raise the diffuser rack assembly to the servicing position. In addition, the mechanism shall be designed to allow the diffuser rack to be

pivoted 360° when in the service position for ease of diffuser inspection and servicing.

2.2.24.9 Adhesive anchors of 304 stainless steel shall be provided for anchoring the diffuser assemblies.

2.2.25 AIR CONTROL VALVES

2.2.25.1 Furnish one 10" diameter electrically operated butterfly valve for each basin to control the air flow.

2.2.25.2 Valve shall conform with the requirements of Section 15102 AIR SERVICE VALVES.

2.2.25.3 Valve operators shall conform with the requirements of Section 16948 ELECTRIC VALVE ACTUATORS.

2.2.26 SLUDGE WASTING PUMP

2.2.26.1 Furnish one submersible non-clog sludge pump for each basin. Each pump shall be equipped with 2 HP, submersible electrical motor connected for 460 volt, three phase, 60 hertz operation. Pump shall include an adequate length of multi-conductor hypalon jacketed type SPC cable suitable for submersible pump applications. The power cable shall also be sized according to NEC and ICEA standards. The pump shall be supplied with a mating cast iron discharge elbow and be capable of delivering 96 GPM at 14 ft. TDH. Each unit shall be fitted with an adequate length of stainless steel lifting chain of adequate strength to permit raising and lowering the pump.

2.2.26.2 The pump shall be capable of handling raw, unscreened sewage. The discharge connection elbow shall be permanently installed with the discharge piping. The pump shall be automatically connected to the discharge connection elbow when lowered into place, and shall be easily removed for inspection or service. There shall be no need for personnel to enter the basin or pump well. Sealing of the pumping unit to the discharge connection elbow shall be accomplished by a simple linear downward motion of the pump.

2.2.26.3 The sliding guide bracket shall be an integral part of the pump unit. The entire weight of the pumping unit shall be guided by two stainless steel guide bars and pressed tightly against the discharge connection elbow with metal-to-metal contact. Sealing of the discharge interface by means of a diaphragm, O-ring, or other devices will not be acceptable. The pump, with its appurtenances and cable, shall be capable of continuous submergence underwater without loss of watertight integrity to a depth of 65 ft.

2.2.26.4 Major pump components shall be of grey cast iron, ASTM A-48, Class 35B, with smooth surfaces devoid of blow holes or other irregularities. All exposed nuts or bolts shall be AISI type 304 stainless steel construction. All exterior metal surfaces coming into contact with the pumpage, other than stainless steel or brass, shall be protected by a factory applied spray coating of alkyd primer and a synthetic resin enamel finish. All O-rings shall be of Nitrile Rubber. The lifting handle shall be galvanized steel. Cast iron impellers shall be sprayed with primer.

2.2.26.5 The cable entry seal design shall preclude specific torque requirements to insure a watertight and sumbersible seal. The cable entry shall consist of a single cylindrical elastomer grommet, flanked by washers, all having a close tolerance fit against the cable outside diameter and the entry inside diameter and compressed by the body containing a strain relief function,

separate from the function of sealing the cable. The assembly shall provide ease of changing the cable when necessary using the same entry seal. The junction box shall be completely sealed off from the pumped media. Epoxies, silicones, or other secondary sealing systems shall not be considered acceptable.

2.2.26.6 The pump motor shall be induction type with a squirrel cage rotor, shell type design, housed in an air filled, watertight chamber, NEMA B type. The stator windings and stator leads shall be insulated with moisture resistant Class F insulation rated for 155°C (311°F). The stator shall be dipped and baked three times in Class F varnish and shall be heat-shrink fitted into the stator housing. The use of bolts, pins or other fastening devices requiring penetration of the stator housing is not acceptable. The motor shall be designed for continuous duty handling pumped media of 40°C (104°F) and capable of up to 15 evenly spaced starts per hour. The rotor bars and short circuit rings shall be made of cast aluminum.

2.2.26.7 The pump shaft shall be of ASTM 420 stainless steel and shall rotate on two single row ball bearings. Motor bearings shall be permanently grease lubricated. Each pump shall be provided with a tandem mechanical shaft seal system consisting of two totally independent seal assemblies. The seals shall operate in a lubricant reservoir that hydrodynamically lubricates the lapped seal faces at a constant rate. The lower, primary seal shall be tungsten-carbide/tungsten-carbide. The upper seal shall be ceramic/carbon. The seals shall require neither maintenance nor adjustment nor depend on direction of rotation for sealing.

2.2.27 LEVEL SENSORS

2.2.27.1 Furnish one level sensor assembly consisting of a galvanized steel mast, PVC retriever pipe, liquid level sensors for each basin. Each mast shall include three level sensors which conform to the requirements of Section 16904 LIQUID LEVEL SENSORS.

2.2.27.2 Adhesive anchors of 304 stainless steel shall be provided for anchoring the level sensor mast.

2.3 AEROBIC DIGESTER/SLUDGE HOLDING BASIN STRUCTURE

The Aerobic Digester/Sludge Holding basin shall be field erected in one (1) basin as shown on the contract drawings:

Inside Dimensions: 55 ft. x 55 ft.

Side Water Depth:

Maximum Operating Level: 18 ft. SWD
Freeboard: 2 ft.
Top Of Wall: 20 ft.

2.3.1 BASIN MIXER

Furnish one (1) mechanical floating mixer and related equipment accessories as described herein for each basin. Each mixer shall consist of a motor, direct-drive impeller driven at a constant speed, an integral flotation unit, and impeller volute. The impeller shall be designed to pump the liquid from near the surface and direct it down toward the vessel/basin bottom. The mixer shall be capable of being reversed to cause backflow liquid movement without causing damage to the mixer chassis and without causing upflow liquid damage to the motor bearing and windings. No liquid spray or other liquid leakage upward onto the surface of the motor support surface or flotation chassis will be allowed at any time.

2.3.1.1 Performance

Each mixer shall have a zone of complete mix of 55 feet square 18 feet water depth and a direct pumping rate of 11,780 GPM with a recirculation rate of 389,000 GPM.

2.3.1.2 Mixer Drive Motor

2.3.1.2.1 The motor shall be rated for 20 horsepower at 900 RPM and wired for 460 volt, 60 hertz, three phase service. The motor shall be standard efficiency, vertical P base design, totally enclosed fan cooled (TEFC), and rated for severe duty. The motor shall in all cases equal or exceed standard NEMA specifications. The motor winding insulation shall in all cases equal or exceed NEMA Class F rating and shall be nonhygroscopic. A minimum service factor of 1.15 shall be furnished.

2.3.1.2.2 Each motor shall include a factory installed 115 volt, single phase, 60 hertz space heater to prevent motor condensation.

2.3.1.3 Motor Mounting Base

2.3.1.3.1 The motor shall be securely mounted onto a solid 304 stainless steel base which is integral with the motor base extension. All submersed wetted motor mounting base components shall be constructed of 304 stainless steel.

2.3.1.3.2 The upper portion of the motor mounting base, immediately below the lower motor bearing, shall include two independent acting air seals. One seal shall contact the rotating motor shaft extension and shall not require scheduled lubrication or maintenance. The second seal shall consist of one stationary and one moving component. These two seals shall be capable of sealing off the flow of air from the suction action of the pumped flow and prevent backflow of liquid during impeller reversal.

2.3.1.4 Impeller Shaft

The mixer motor shall have a one-piece motor shaft continuous from the top motor bearing through the lower bearing, and down to and through the impeller. This shaft shall be manufactured from 17-4 PH stainless steel having a minimum yield strength of 100,000 psi.

2.3.1.5 Flotation

Each unit shall be equipped with a modular float constructed of fiberglass with a central float passage of a size to allow installation and removal of the pump impeller. The minimum diameter of the float shall be 94.5 inches and the minimum thickness 12.75 inches. The float shall be foamed full of polyurethane foam of the closed cell type, and shall be totally sealed to prevent the foam from being in contact with the external environment.

2.3.1.6 Impeller

The impeller shall be a precision casting of 316 stainless steel and shall be specifically designed for the application intended. It shall be dynamically and hydraulically balanced.

2.3.1.7 Intake Volute Assembly

The impeller shall operate in a volute made of 304 stainless steel plate, minimum 3/16" thick.

2.3.1.8 Vibration

The impeller and rotor unit shall be dynamically balanced as a completed assembly and as an integral unit with the motor mounting base to a vibrational level not to exceed 2.0 mils at the motor RPM.

2.3.1.9 Pivotal Mooring System

A pivotal mooring system shall be supplied for each unit consisting of a 304 stainless steel mooring arm extending from the basin sidewall to the unit. The pivotal mooring system including; adhesive anchors, mooring cable, clips, thimbles, and quick disconnects shall be supplied as shown on the drawings to assure a consistent location within the basin. Hardware and adhesive anchors shall be 304 stainless steel.

2.3.1.10 Pivotal Mooring Electrical Power Cable

Electrical cable shall be supplied with cable grips at the motor and basin wall terminations. Electrical cable shall be attached to the mooring arm with cable ties provided by the equipment supplier.

2.3.2 FLOATING WEIR

Furnish one floating weir and related equipment accessories as described herein for each basin. Each floating weir shall consist of an integral flotation unit and a stainless steel weir assembly.

2.3.2.1 Performance

2.3.2.1.1 Each floating weir shall be capable of withdrawing decant fluid from 4-6 inches beneath the liquid surface, regardless of liquid depth, down to the minimum allowable water level specified below. The decant liquid shall be drawn through an adjustable weir opening of 2-6 inches. The weir shall be circular in shape and permit liquid to enter the weir from the entire 360 degrees without obstruction.

2.3.2.1.2 Maximum allowable water level in the basin is 18 ft.

2.3.2.1.3 Each floating weir shall be rated for an average flow of 566 gallons per minute.

2.3.2.2 Weir

The weir shall be constructed of 304 stainless steel, be circular in shape, and shall include vortex control baffles permanently affixed to the weir.

2.3.2.3 Flotation

Each unit shall be equipped with a modular float constructed of fiberglass filled with closed cell polyurethane foam having a minimum 2.0 lbs./ft^3 density. Float shall be completely sealed to prevent the foam from being in contact with the external environment. Float shall have 981 lbs. reserve buoyancy to ensure stability and to provide support flotation required during servicing.

2.3.2.4 Discharge Hose

Each floating weir shall include a 6" diameter two-ply neoprene wire reinforced discharge hose of sufficient size to permit vertical movement of the floating weir and provide sufficient capacity to handle the design decant flow rate. A painted cast iron 90 degree elbow shall be provided for attachment to the through-the-wall pipe and decant hose. Through-the-wall pipe shall be provided by the installing contractor. Proper flanged connections to the floating weir and the discharge points shall be provided for trouble-free operation while permitting a means for disconnecting for service.

2.3.2.5 Restrained Mooring System

2.3.2.5.1 Furnished as part of the floating weir assembly shall be a galvanized steel mooring frame which shall permit the assembly to move up and down following the change in liquid level while restrained within the vertical pylons.

2.3.2.5.2 Each floating weir shall be moored with a restrained mooring system consisting of two - 4" diameter Schedule 40 vertical pylons with base plate constructed of galvanized steel pipe. Each pylon with base plate shall be affixed to the basin floor with 304 stainless steel adhesive anchors. Each pylon shall be filled with concrete by the installing contractor.

2.3.3 FLOATING WEIR FLOW CONTROL VALVE

2.3.3.1 Furnish one 6" inch diameter manually operated valves per basin to control the decant rate.

2.3.3.2 Valve shall conform with the requirements of Section 15101 PLUG VALVES.

2.3.4 AERATION SYSTEM

2.3.4.1 The aeration system shall be a coarse bubble diffused air system and shall be a retrievable configuration as shown on the contract drawings.

2.3.4.2 The aeration system shall be capable of delivering 372 SCFM per basin.

2.3.5 RETRIEVABLE COARSE BUBBLE DIFFUSER ASSEMBLIES

2.3.5.1 The aeration system shall be a coarse bubble diffused air system and shall be a retrievable configuration as shown on the contract drawings.

2.3.5.2 Furnish 2 retrievable air diffuser assemblies for each basin. Each assembly shall consist of diffusers, diffuser manifold, track/beam, flexible air line, isolation valve, and lifting mechanism.

2.3.5.3 A total of 8 diffuser tubes shall be provided for each diffuser assembly. Each diffuser shall consist of an end connection, air reservoir, air release ports, and an open bottom constructed so materials cannot lodge in the body of the diffuser. The diffuser shall be constructed of 304 stainless steel and shall include an integral hex nut and NPT male threads. Each diffuser assembly shall provide a uniform air distribution.

2.3.5.4 The diffusers shall be connected to a diffuser manifold constructed of galvanized steel. The entire assembly shall be located such that each diffuser centerline is twelve (12) inches above the basin floor.

2.3.5.5 Each diffuser assembly shall include a 3" diameter wire reinforced neoprene flexible air line with fiberglass reinforced nylon end fittings and 90° aluminum quick disconnect cam with 304 stainless steel handle. All air distribution piping, gaskets, and hardware beyond the quick disconnect cam shall be supplied by the installing contractor.

2.3.5.6 A 3" diameter manually operated isolation butterfly valve shall be provided for each diffuser assembly for connection to the main air distribution piping. Valve shall conform with the requirements of Section 15102 AIR SERVICE VALVES.

2.3.5.7 The vertical track/beam assembly and intermediate supports shall be galvanized steel. The vertical track/beam shall support the manual lifting mechanism assembly during operation and servicing.

2.3.5.8 A manual lifting mechanism shall be provided for each retrievable diffuser assembly. Each lifting mechanism shall consist of polyolefin guide wheels, enamel coated cast iron sheave with bronze bushing, 304 stainless steel lifting cable, and manual winch with enamel coated cast iron case and drum. The lifting mechanism shall be of sufficient design capacity to raise the diffuser rack assembly to the servicing position. In addition, the mechanism shall be designed to allow the diffuser rack to be pivoted 360° when in the service position for ease of diffuser inspection and servicing.

2.3.5.9 Adhesive anchors of 304 stainless steel shall be provided for anchoring the diffuser assemblies.

2.3.6 SLUDGE WASTING PUMP

2.3.6.1 Furnish one submersible non-clog sludge pump for each basin. Each pump shall be equipped with 2 HP, submersible electrical motor connected for 460 volt, three phase, 60 hertz operation. Pump shall include an adequate length of multi-conductor hypalon jacketed type SPC cable suitable for submersible pump applications. The power cable shall also be sized according to NEC and ICEA standards. The pump shall be supplied with a mating cast iron discharge elbow and be capable of delivering 102 GPM at 21 ft. TDH. Each unit shall be fitted with an adequate length of stainless steel lifting chain of adequate strength to permit raising and lowering the pump.

2.3.6.2 The pump shall be capable of handling raw, unscreened sewage. The discharge connection elbow shall be permanently installed with the discharge piping. The pump shall be automatically connected to the discharge connection elbow when lowered into place, and shall be easily removed for inspection or service. There shall be no need for personnel to enter the basin or pump well. Sealing of the pumping unit to the discharge connection elbow shall be accomplished by a simple linear downward motion of the pump.

2.3.6.3 The sliding guide bracket shall be an integral part of the pump unit. The entire weight of the pumping unit shall be guided by two stainless steel guide bars and pressed tightly against the discharge connection elbow with metal-to-metal contact. Sealing of the discharge interface by means of a diaphragm, O-ring, or other devices will not be acceptable. The pump, with its appurtenances and cable, shall be capable of continuous submergence underwater without loss of watertight integrity to a depth of 65 ft.

2.3.6.4 Major pump components shall be of grey cast iron, ASTM A-48, Class 35B, with smooth surfaces devoid of blow holes or other irregularities. All exposed nuts or bolts shall be AISI type 304 stainless stell construction. All exterior metal surfaces coming into contact with the pumpage, other than stainless steel or brass, shall be protected by a factory applied spray coating of alkyd primer and a synthetic resin enamel finish. All O-rings shall be of Nitrile Rubber. The lifting handle shall be galvanized steel. Cast iron impellers shall be sprayed with primer.

2.3.6.5 The cable entry seal design shall preclude specific torque requirements to insure a watertight and sumbersible seal. The cable entry shall consist of a single cylindrical elastomer grommet, flanked by washers, all having a close tolerance fit against the cable outside diameter and the entry inside diameter

and compressed by the body containing a strain relief function, separate from the function of sealing the cable. The assembly shall provide ease of changing the cable when necessary using the same entry seal. The junction box shall be completely sealed off from the pumped media. Epoxies, silicones, or other secondary sealing systems shall not be considered acceptable.

2.3.6.6 The pump motor shall be induction type with a squirrel cage rotor, shell type design, housed in an air filled, watertight chamber, NEMA B type. The stator windings and stator leads shall be insulated with moisture resistant Class F insulation rated for 155°C (311°F). The stator shall be dipped and baked three times in Class F varnish and shall be heat-shrink fitted into the stator housing. The use of bolts, pins or other fastening devices requiring penetration of the stator housing is not acceptable. The motor shall be designed for continuous duty handling pumped media of 40°C (104°F) and capable of up to 15 evenly spaced starts per hour. The rotor bars and short circuit rings shall be made of cast aluminum.

2.3.6.7 The pump shaft shall be of ASTM 420 stainless steel and shall rotate on two single row ball bearings. Motor bearings shall be permanently grease lubricated. Each pump shall be provided with a tandem mechanical shaft seal system consisting of two totally independent seal assemblies. The seals shall operate in a lubricant reservoir that hydrodynamically lubricates the lapped seal faces at a constant rate. The lower, primary seal shall be tungsten-carbide/tungsten-carbide. The upper seal shall be ceramic/carbon. The seals shall require neither maintenance nor adjustment nor depend on direction of rotation for sealing.

2.3.7 LEVEL SENSORS

2.3.7.1 Furnish one level sensor assembly consisting of a galvanized steel mast, 304 stainless steel float weights, and liquid level sensors for each basin. Each mast shall include two level sensors which conform to the requirements of Section 16904 LIQUID LEVEL SENSORS.

2.3.7.2 Adhesive anchors of 304 stainless steel shall be provided for anchoring the level sensor mast.

2.3.8 SPARE PARTS

The following spare parts shall be supplied by the SBR equipment manufacturer:

Qty.	Description
(1)	Decanter linear actuator and capacitor
(1)	Decanter limit switch with arm
(1)	15 HP Mixer Power Section
(10)	Coarse Bubble Diffusers
(1)	Level Switch

PART 3 - EXECUTION

3.1 EQUIPMENT INSTALLATION

All equipment furnished by the SBR manufacturer shall be installed as indicated and in accordance with the manufacturer's written instructions. Installation of the equipment shall be the responsibility of the installing Contractor and will be in accordance with requirements of the contract

documents.

3.1.1 Adjusting

Field adjustments shall be made as required for proper operation of the equipment.

3.1.2 Testing

Testing shall be in accordance with equipment manufacturer's recommendations.

3.2 MANUFACTURER'S SERVICES

Services of a manufacturer's representative who is experience in the installation, adjustment, and operation of the equipment specified shall be provided. The representative shall supervise the installation, adjustment, and testing of the equipment. Twelve (12), 8-hour days shall be furnished in not more than three (3) separate trips to monitor equipment installation, initial operation of equipment, and to instruct Owner's personnel in Operation and Maintenance. Two (2) additional 8-hour days shall be furnished in a single trip for technical assistance with treatment process after plant start-up.

- - o 0 o - -

SECTION 12625

LABORATORY FURNITURE AND EQUIPMENT

PART 1 GENERAL

1.1 REFERENCES

The publications listed below form a part of this specification to the extent referenced. The publications are referred to in the text by the basic designation only.

AMERICAN SOCIETY FOR TESTING AND MATERIALS (ASTM)

ASTM A 568/ A 568M-90b	(1990) Specification for General Requirements for Steel, Carbon, and High-Strength, Low-Alloy, Hot-Rolled, Sheet and Cold-Rolled Sheet.

FEDERAL SPECIFICATIONS

FS DD-G-451	Glass, Plate, Sheet, Figured (Float, Flat, for Glazing, Corrugated, Mirrors, and Other Uses)

NATIONAL FIRE PROTECTION ASSOCIATION (NFPA)

NFPA 30 (1991)	Fire Protection for Laboratories Using Chemicals

1.2 SUBMITTALS

The following shall be submitted in accordance with Section 01300 SUBMITTALS:

SD-02, Manufacturer's Catalog Data

Laboratory furniture.

Fumehood.

Balance table.

Balance.

Refrigerator.

Incubator.

Muffle furnace.

Include descriptive literature, technical data sheets, and diagrams.

SD-03, Manufacturer's Standard Color Charts

SD-04, Drawings

Laboratory equipment and fumehood layout

Drawing Requirements

Show pertinent installation layout. Indicate details of construction and rough-in requirements.

SD-06, Instructions

Fumehood, assembly.

SD-07, Schedules

Laboratory furniture, equipment, and hood.

SD-10, Test Reports

Fumehood tests.

SD-13, Certificates

Fumehood.

Base cabinets.

PART 2 PRODUCTS

2.1 BASE AND WALL CABINETS

2.1.1 Sheet steel

ASTM A568/A568M-90b cold-rolled, commercial-quality sheet steel. Metal gages used herein are minimum thickness.

2.1.2 Stainless steel

AISI Type 316.

2.1.3 Glass

FS DD-G-451, Type II, B quality or better. Tempered glass shall be as specified in Section 08810 GLASS AND GLAZING.

After fabrication, steel components shall be pre-prime treated inside and out by a five-stage process.

a. Physical-chemical wash with hot alkaline cleaner.

b. Rinse.

c. Treat with metallic phosphate solution.

d. Water rinse.

e. Chromic acid rinse.

Immediately following pre-prime treatment, prime with synthetic resin primer and high temperature bake. Cool, inspect, and sand components as required. Finish all surfaces with high-temperature baked synthetic resin finish coating. Color of surfaces concealed in the finish work shall be manufacturer's standard white. Color of exposed surfaces including inside of drawers and cabinets shall be one color only selected from manufacturer's standard colors.

2.2 FURNITURE CONSTRUCTION

2.2.1 Structure

Laboratory furniture shall be steel. All parts shall be accurately die formed and assembled in jigs. Units shall be square, rigid, and adequately reinforced. Welded joints shall be notched and adequately reinforced. Welded joints shall be notched and tightly fitted with exposed welds ground smooth. All exposed surfaces shall be polished smooth before finishing. When assembled, each cabinet shall be an integral unit which will fit with congruity into the assembly of laboratory furniture, but which may be readily relocated. Adjoining units shall be connected with concealed fasteners. All units extending to the floor shall be equipped with leveling threaded adjusters and provided with cove base molding. All drawers and doors shall be interchangeable.

2.2.2 Base Cabinets

Backs of base cabinets shall be removable from inside to provide access to service piping adj shall be provided with flanged sides to ensure rigidity.

Bottoms shall be welded on all sides and shall have access holes with cover plates over the leveling screws. Cabinets shall be suitable reinforced at each bottom corner. Bodies of cabinets shall be 18-gage steel and side panels shall be provided.

2.2.3 Wall Cabinets

Wall cabinets shall be 18-gage steel. End panels shall be 1-piece construction, formed at the front and rear into corner posts. Backs shall be securely welded to the end panels, top and bottom to prevent lateral racking. Bottoms shall be full width and depth of cabinet and shall be securely welded to the side panels. Wall hung cabinets shall be provided with a double bottom. Tops shall be securely welded to the end panels. Tops shall be flanged downward at the front to accommodate sliding doors.

2.2.4 Drawers

Drawer fronts shall be double-wall construction. All drawers shall be provided with rubber bumpers and with stops which prevent accidental drawer removal. Drawers shall be easily removed without use of tools. Each drawer shall be supported on ball bearing or nylon rollers operating in removable and adjustable steel channels. Drawers shall be 20-gage steel with drawer suspension channels of 16-gage steel.

2.2.5 Doors

Solid panel doors shall be flush, double-wall, sound deadened construction with internal stiffeners and shall be 20-gage steel. Glazed doors shall have 18-gage frames, mitered and welded at the corners. Glass shall be mounted in rubber or plastic glazing channels. Swing doors shall be fitted into casework openings with 1/16-inch clearance between doors and frames. Swing door openings shall be provided with rubber bumpers at top and bottom. Silent low-friction glides shall be provided at the top and bottom of each sliding door. Rubber bumper stops shall be provided at fully opened and closed positions. All doors shall operate easily and quietly and shall be easily removable.

2.2.6 Shelves

Shelves shall be removable and shall be supported at four points. Support brackets shall be adjustable in not to exceed 2-inch vertical increments. Ends and sides of shelves shall be formed down at least 3/4-inch and returned 1/2-inch at front and back. All shelf corners shall be smooth without sharp edges. Shelves 36 inches long or longer shall be reinforced.

2.2.7 Table Tops

Table tops, and splashbacks shall be at least 1 inch thick solid epoxy, black in color, and shall be furnished in as large sections as practicable. Tops for wall tables shall extend out from the wall face at least 31 inches unless otherwise shown or specified. All table tops shall be field joined into continuous tops. Field joints shall be made with an acid, alkali, and solvent resistant cement. Field joints shall be at least as strong as the top material. Working surfaces shall be provided with a drip groove around the underside of exposed edges, and shall have a 1/4-inch radius along all exposed top edges and on all exposed corners. Balance table top shall be at least 2-1/2 inch thick cast slabs of epoxy resin white in color. Table tops shall have a suitable opening for each sink. Holes shall be drilled as necessary for service fixture.

2.3 EQUIPMENT

2.3.1 Fumehood

The fumehood shall have a baffle with adjustable slots, sash, and overhead light fixture with switch. The exterior of the hood shall be steel and shall be the same style and construction as the base cabinets. The hood lining shall be epoxy resin at least 1/4-inch thick. Lining shall be attached with AISI 18-8 stainless steel fasteners. No metal other than

AISI 18-8 stainless steel shall be exposed on the inside of the hood superstructure. A stainless steel collar for attachment of exhaust ductwork shall be furnished. The working surface shall be molded epoxy resin. The superstructure shall be completely rigid.

The sash shall have a stainless steel frame and shall be glazed with tempered glass set in rubber or plastic moldings. The sash shall be counter-balanced to remain motionless at any setting and so that not more than 22N pressure is required to raise or lower it. The light fixture shall consist of a two-tube fluorescent unit of the longest practical length shielded from the interior of the hood by a tempered glass panel. The fumehood shall be auxiliary air style and shall be furnished and installed complete with PVC ductwork, in-line exhaust fan and wall cap for complete installation as required.

2.3.2 Acid Storage Cabinet

The acid storage cabinet shall be located under the fumehood and shall be of standard laboratory cabinet construction except for the following features. The cabinet shall have a corrosion-resistant lining, a removable shelf, lead fume vent, and ventilating louvers in the doors.

2.3.3 Solvent Storage Cabinet

The solvent storage shall be specifically designed and constructed for the storage of flammable and combustible liquids. Construction shall be based upon the requirements listed by OSHA and NFPA 30. Bottom, top, sides, and doors shall be double-wall construction of not less than 18-gage steel with all joints welded or screwed. Doors shall be equipped with piano hinges, one door shall have a 3-point locking device, the other a full-height astragal. The cabinet shall have a 2-inch deep liquidtight pan covering the bottom and heavy-duty, reinforced shelves.

2.3.4 Pegboards

Pegboards shall be made from charcoal gray molded resin board at least 1-1/4 inches thick with polypropylene pegs.

2.3.5 Filler Panels

Filler panels shall be 18-gage steel and shall match adjacent furniture.

2.3.6 Hardware

Hardware and trim shall be best quality for the intended use. All hardware, including screws and bolts, shall be protected against corrosion by plating or painting. Drawer and door pulls shall have adequate cross section to ensure against breakage under rough usage and shall all be the same style. Either die castings with satin chrome finish or back semigloss plastic material molded over a solid brass core extending through the entire pull will be acceptable. Sliding door pulls shall be recessed. Hinges shall be chromium plated steel, 2-1/2 inches high, five knuckle institutional heavy-duty type with brass pins. Door catches shall be spring-release type. Sash pulleys shall be steel, cadmium plated, with heavy-duty oilite bronze bearings. Sash weights shall be cast iron or lead.

2.3.7 Cove Base

Cove base molding shall be applied continuously around bases of cabinets after installation is completed. Molded corners shall be installed on all interior and exterior corners. Base moldings shall be attached with waterproof cement.

2.4 SINKS

Sinks shall be single-piece solid castings of epoxy resin. A watertight joint shall be made between each sink and the wall table top.

2.5 SERVICE FIXTURES

The general arrangements and locations of the service fixtures shall be as indicated on the construction drawings. A watertight joint shall be made between each deck-mounted service fixture and the table top.

2.5.1 Plumbing Fixtures

Water, air, vacuum, and gas fixtures shall be designed for laboratory use and shall be brass finished in polished heavy chrome. Fixtures mounted inside fumehoods shall have a fume-resistant baked enamel finish. Each fixture shall be supplied with a molded plastic index button which shall indicate the service by lettering and color.

Water fixtures shall have renewable seats and washers. Gooseneck spouts shall be heavy seamless brass tubing finished in polished chrome. Aerators shall be provided on all water faucets which are not required to be equipped with hose connectors. Gas, air, and vacuum cocks shall be laboratory ground key type, 3/8-inch IPS provided with integral serrated hose ends. Each cock shall be leakproof at 125 psi air pressure. Each cock shall be lubricated with suitable sealing lubricant. Each gooseneck shall be furnished with straight, serrated hose connector and a vacuum breaker.

Traps shall be tempered glass or polypropylene. Each trap shall be swivel drum type P-trap. Sink drain fittings shall be Duriron Company "Durcon," or equal, and shall be provided with plug, removable strainer disc, and beehive overflow. The tailpiece of each drain fitting shall be provided with a locknut and an adapter for connection to the drain piping.

2.5.2 Electrical Fixtures

Electrical receptacles be 20-ampere, single-phase, designed to accommodate 120 or 208-volt, single-phase plugs. Switches shall be 20-ampere, 120/240-volt; receptacles and switches shall be installed in deck-mounted pedestal boxes. All boxes shall be provided with satin finished 18-8 stainless steel plates, and flush mount boxes, as shown on drawings.

2.6 REFRIGERATOR/FREEZER

Fourteen cubic feet, free standing. Refrigerator shall maintain temperature between 36 degrees F to 41 degrees F. Freezer shall maintain temperature between 1 degree and 10 degrees F. Exterior shall be white porcelain on steel, or steel with baked enamel finish to match adjacent cabinets. Interior lining shall be white ABS plastic. Provide hermetically-sealed refrigeration system. Equip refrigerator with 3 full-size adjustable wire shelves. UL-listed for nonflammable reagent storage.

2.7 REFRIGERATED INCUBATOR

Twenty cubic feet capacity. Temperature range 14 degrees F to 122 degrees F, maintained with solid-state, temperature-controlled, continuous duty, circulating fan. Digital read-out thermometer and 150 BOD bottles. Five removable shelves and full-width storage basket. 115-volt, 60 Hz, 10-ampere operation.

2.8 BALANCE - 250 GRAM CAPACITY

Electronic, analytic type, microprocessor-controlled, automatic calibration, full range taring, variable integration time, and high visibility display. Full enclosed extra large weighing chamber. 115-volt, 60-hertz operation.

2.9 MUFFLE FURNACE

Solid state controlled. 302 degrees F to 2,000 degrees F. 1.68 kW fully automatic; 0.08 cubic feet chamber capacity. Four-wall heat and vented; welded steel case. Recessed counter-weighted door. Thermocouple and line cord with plug. 240-volt, 60 Hz, 7-ampere operation.

PART 3 EXECUTION

3.1 INSTALLATION

Install units at locations indicated. Conform to installation provisions of Section 15400 PLUMBING, GENERAL PURPOSE, and Section 15488 GAS PIPING SYSTEMS.

3.2 LABORATORY FURNITURE SCHEDULE (BASED ON FISHER-SCIENTIFIC)

Catalog No.	Description
91-162	Pegboard
91-341	Knee space filler panel
91-348	End space filler panel, base cabinet
91-352	End space filler panel, base cabinet
91-390	Single strut support lines and shelves
91-435	2-gang, 4 outlet, 120-volt, 15 amperes, double face pedestal box
91-435-2/ws	2-gang, 2 outlet, 208-volt, 20 amperes, double face pedestal box
91-490N	Single cock, deck mount, air, gas, vacuum fixtures
91-485	Mixing faucet, deck mount, swivel spout
91-589	Safety shower and eyewash
91-812	Sliding doors, for 35" x 30" wall cabinets
91-831	Wall cabinet, 35" x 30" x 12"
93-485	Fume hood, epoxy lined, auxiliary air
94-84A-Type 4	1" thick black worktop, Style A, Type 4
97-160	Base cabinet, 4-drawer
97-180Q	Base cabinet, 2-drawer
97-260Q	Base cabinet, 4-drawer
97-320Q	Base cabinet, double door cupboard
97-410Q	Base cabinet, sliding door cupboard
97-420Q	Base cabinet, double door cabinet
97-425Q	Base cabinet, cupboard, 4-drawer
97-430Q	Base cabinet, double door cabinet, 2-drawer
97-463Q	Base cabinet, 8-drawer
97-490Q	Base cabinet, sink cabinet with double doors
97-503Q	Solvent storage cabinet
97-510Q	Base cabinet, acid storage cabinet
97-790Q	2-drawer, angled corner cabinet
01-913-261	Balance
01-994-5	Balance table
10-551-1	Muffle furnace

Catalog No.	Description
11-679-25	Incubator
13-988-105	Refrigerator

-- o O o --

SECTION 13080

SEISMIC PROTECTION FOR MECHANICAL, ELECTRICAL EQUIPMENT

PART 1 GENERAL

1.1 REFERENCES

The publications listed below form a part of this specification to the extent referenced. The publications are referred to in the text by basic designation only.

AMERICAN SOCIETY FOR TESTING AND MATERIALS (ASTM)

ASTM A 36	(1990) Structural Steel
ASTM A 307	(1990) Carbon Steel Bolts and Studs, 60 000 PSI Tensile Strength
ASTM A 325	(1990) High-Strength Bolts for Structural Steel Joints
ASTM A 501	(1989) Hot-Formed Welded and Seamless Carbon Steel Structural Tubing
ASTM A 576	(1990b) Steel Bars, Carbon, Hot-Wrought, Special Quality
ASTM E 580	(1991) Application of Ceiling Suspension Systems for Acoustical Tile and Lay-In Panels in Areas Requiring Seismic Restraint

AMERICAN SOCIETY OF MECHANICAL ENGINEERS (ASME)

ASME B18.2.1	(1981) Square and Hex Bolts and Screws (Inch Series)
ASME B18.2.2	(1987) Square and Hex Nuts (Inch Series)

NATIONAL FIRE PROTECTION ASSOCIATION (NFPA)

NFPA 13	(1989) Installation of Sprinkler Systems

UNDERWRITERS LABORATORIES (UL)

UL 1570	(Apr 11, 1988; 3rd Ed; Rev thru Oct 1, 1991) Fluorescent Lighting Fixtures
UL 1571	(Oct 21, 1991; 3rd Ed) Incandescent Lighting Fixtures

1.2 SYSTEM DESCRIPTION

1.2.1 General

The requirements for seismic protection measures to be applied to mechanical/electrical equipment and systems specified herein are in addition to any other items called for in other sections of these specifications.

1.2.1.1 Mechanical/Electrical

Mechanical/electrical equipment shall include the following items to the extent required on plans or in other sections of these specifications:

Storage Tanks for Water	Water Heaters
Water Piping	Drain, Waste and Vent Piping
Control Panels	Air Handling Units
Switchgear	Light Fixtures

Unit Substations
Transformers
Storage Racks
Ducts
Motor Control Centers
Switchboards (Floor Mounted)
Suspended Ceiling Assemblies

1.2.1.2 Mechanical Systems

The following mechanical systems shall be seismically protected in accordance with this specification and to the extent required on the drawings and other specifications included in this contract:

All Piping Inside the Building in Accordance With This Specification
All Water Supply Systems
Sanitary Sewer Systems
All Process Piping

1.2.1.3 Zone

This facility is located in Seismic Zone 1. The zones indicated in NFPA 13 have no bearing on the requirements of this specification.

1.2.1.4 Exclusion

Seismic protection of water pipes for fire protection systems will be installed as specified in Section 15300 SPRINKLER SYSTEMS, FIRE PROTECTION.

1.2.1.5 Pipes and Ducts Requiring No Special Seismic Restraints

Seismic restraints may be omitted from the following installations:

a. Piping in mechanical equipment rooms less than 1-1/4 inches inside diameter.

b. All other piping less than 2-1/2 inches inside diameter.

c. All electrical conduit less than 2-1/2 inches inside diameter.

d. All rectangular air handling ducts less than 6 square feet in cross sectional area.

e. All round air handling ducts less than 28 inches in diameter.

f. All piping suspended by individual hangers 12 inches or less in length from the top of pipe to the bottom of the supporting structural member where the hanger is attached.

g. All ducts suspended by hangers 12 inches or less in length from the top of the duct to the bottom of the supporting structural member.

1.2.1.6 All Other Interior Piping, Conduit, and Ducts

Interior piping, conduit, and ducts not covered by paragraph 1.3.1.4 or 1.3.1.5 will be seismically protected in accordance with the provisions herein.

1.3 SUBMITTALS

The following shall be submitted in accordance with Section 01300 - SUBMITTALS:

SD-01 Data

Seismic Protection.

Copies of the design calculations for bridge cranes and monorails with the detail drawings.

SD-04 Drawings

Seismic Protection.

Detail drawings along with catalog cuts, templates, and erection and installation details, as appropriate, for the items listed below. Submittals shall be complete in detail; shall indicate thickness, type, grade, class of metal, and dimensions; and shall show construction details, reinforcement, anchorage, and installation with relation to the building construction.

Sway Braces
Flexible Couplings or Joints
Resilient Type Vibration Devices
Bridge Cranes and Monorails

SD-13 Certificates

Flexible Ball Joints.

Flexible ball joints shall be certified to be suitable for the service intended by the manufacturer, based on not less than 2 years' satisfactory operation in a similar application.

PART 2 PRODUCTS

2.1 MATERIALS AND EQUIPMENT

Materials and equipment shall conform to the respective specifications and other requirements specified below:

2.1.1 Bolts and Nuts

Squarehead bolts and heavy hexagon nuts, ASME B18.2.1 and ASME B18.2.2, and ASTM A 307 or ASTM A 576. Bolts, underground, ASTM A 325.

2.1.2 Sway Brace

Material used for members listed in "SCHEDULES" of this specification, except for pipes, shall be structural steel conforming with ASTM A 36. Steel pipes shall conform to ASTM A 501.

2.1.3 Flexible Couplings

Flexible couplings shall have same pressure ratings as adjoining pipe.

2.1.3.1 Flexible Ball Joints

Flexible ball joints conforming to the following requirements may be employed on aboveground piping. Joints shall have cast or wrought steel casing and ball parts capable of 360-degree rotation plus not less than 15-degree angular movement.

2.1.3.2 Flexible Mechanical Joints

Flexible couplings and joints of the mechanical joint type may be used for aboveground or underground piping.

a. Mechanical couplings for steel or cast-iron pipe shall be of the sleeve type and shall provide a tight flexible joint under all reasonable conditions, such as pipe movement caused by expansion, contraction, slight settling or shifting of the ground, minor variations in trench gradients, and traffic vibrations. Where permitted in other sections of these specifications, joints utilizing split-half couplings with grooved or shouldered pipe ends may be used.

b. Sleeve-type couplings shall be used for joining plain-end pipe sections. The coupling shall consist of one steel middle ring,

two steel followers, two gaskets, and necessary steel bolts and nuts to compress the gaskets. Underground bolts shall be high-strength type as specified above.

2.1.4 Lighting Fixture Supports

Fixture supports shall be malleable iron. Lighting fixtures and supports shall conform to UL 1570 or UL 1571 as applicable.

PART 3 EXECUTION

3.1 SWAY BRACES

Sway braces shall be installed on piping, conduit, and duct to preclude damage during seismic activity. All bracing shall conform to the arrangements shown. Provisions of this paragraph apply to all piping within a 5-foot line around outside of building unless buried in the ground. Piping grouped for support on trapeze-type hangers shall be braced at the same intervals as determined by the smallest diameter pipe of the group. Do not fasten sway braces to two dissimilar parts of a building that may respond in a different mode during an earthquake; for example, a wall and a roof.

No trapeze-type hanger shall be secured with less than two 1/2-inch bolts. Bracing rigidly attached to pipe flanges, or similar, shall not be used where it would interfere with thermal expansion of piping.

3.1.1 Sway Braces for Piping

3.1.1.1 Transverse Sway Bracing

Transverse sway bracing for steel and copper pipe shall be provided at intervals not to exceed those given in schedule "Maximum Span for Transverse Sway Brace in Seismic Zone 1." Transverse sway bracing for pipes of materials other than steel and copper shall be provided at intervals not to exceed the hangar spacing as specified in Section 15400 PLUMBING, GENERAL PURPOSE.

3.1.1.2 Vertical Runs

Vertical runs of piping shall be braced at not more than 10-foot vertical intervals. For tubing, bracing shall be provided at no more than 4-foot spacing. Vertical braces shall be above the center of gravity of the span being braced. All sway braces shall be constructed in accordance with the drawings. Branch lines, walls, or floors shall not be used as sway braces.

3.1.1.3 Anchor Rods, Angles, and Bars

Anchor rods, angles, and bars shall be bolted to either pipe clamps or pipe flanges at one end and cast-in-place concrete or masonry insert or clip angles bolted to the steel structure on the other end. Rods shall be solid metal or pipe as specified below. Anchor rods, angles, and bars shall not exceed lengths given in schedule "Maximum Lengths for Anchor Braces."

3.1.1.4 Clamps and Hangers

Clamps or hangers on uninsulated pipes shall be applied directly to pipe. Insulated piping shall have clamps or hangers applied over insulation in accordance with Section 15250 THERMAL INSULATION FOR MECHANICAL SYSTEMS.

3.1.1.5 Bolts

Bolts used for attachment of anchors to pipe and structure shall be not less than 1/2-inch diameter.

3.1.2 Sway Braces for Ducts

3.1.2.1 Transverse Sway Bracing

Transverse sway bracing shall be provided at each horizontal turn of 45 degrees or more, at the end of each duct run, and otherwise at each 30-foot interval. Walls which ducts penetrate may be considered transverse braces.

3.1.2.2 Longitudinal Sway Bracing

Longitudinal sway bracing shall be provided at 60-foot intervals. Transverse bracing for one duct section may also act as longitudinal bracing for a duct section connected perpendicular to it, if the bracing is installed within 4 feet of the intersection, and it is sized for the larger duct.

3.1.2.3 Bracing Angles

Bracing angles for rectangular ducts shall be in accordance with schedule "Bracing for Rectangular Ducts."

3.2 SPREADERS

Spreaders shall be provided between adjacent piping runs to prevent contact during seismic activity whenever pipe or insulated pipe surfaces are less than 4 inches apart. Spreaders shall be applied at same interval as sway braces at an equal distance between the sway braces. If rack type hangers are used where the pipes are restrained from contact by mounting to the rack, spreaders are not required for pipes mounted in the rack. Spreaders shall be applied to surface of bare pipe and over insulation on insulated pipes utilizing high-density inserts and pipe protection shields in accordance with the requirements of Section 15250 THERMAL INSULATION FOR MECHANICAL SYSTEMS.

3.3 FLEXIBLE COUPLINGS OR JOINTS

3.3.1 Building Piping

Flexible couplings or joints in building piping shall be provided at bottom of all pipe risers larger than 3-1/2 inches in diameter. Cast-iron waste and vent piping need only comply with these provisions when caulked joints are used. Flexible bell and spigot pipe joints using rubber gaskets or no-hub fittings may be used at each branch adjacent to tees and elbows for underground waste piping inside of building to comply with these requirements.

3.4 PIPE SLEEVES

Pipe sleeves in interior non-fire rated wall shall be sized as indicated in the appropriate specification section unless clearance between the pipe and the sleeve is shown on the drawings in which case the sleeve shall be sized as indicated on the drawings to provide clearance to permit differential movement of piping without the piping striking the pipe sleeve.

3.5 ANCHOR BOLTS

All floor or pad mounted equipment required by any section of these specifications shall use cast-in-place anchor bolts. If the size and number of the anchor bolts are not shown on the drawings then anchor bolts shall conform to the schedule for the various equipment weights or the manufacturer's installation recommendations, whichever is the most stringent. Anchor bolts that exceed normal depth of equipment foundation piers or pads shall either extend into concrete floor or the foundation shall be increased in depth to accommodate bolt lengths. Expansion anchors shall not be used to resist seismic or vibratory loads unless test data are provided to verify the adequacy of the specific anchor and

application. In no case shall the expansion anchor size be less than that required for bolts in the preceding table.

3.6 RESILIENT VIBRATION ISOLATION DEVICES

Selection of anchor bolts for vibration isolation devices and/or snubbers to equipment base and foundations shall follow the same procedure as in paragraph ANCHOR BOLTS except that an equipment weight equal to five times the actual equipment weight shall be used.

3.6.1 Resilient and Spring-Type Vibration Devices

Vibration isolation devices shall be selected so that the maximum movement of equipment from the static deflection point shall be 0.5 inches.

3.7 EQUIPMENT SWAY BRACING

Equipment sway bracing shall be provided for all items supported from overhead floor or roof structures. Braces shall consist of angles, rods, bars, or pipes arranged as shown and secured at both ends with not less than 1/2-inch bolts. Braces shall conform to schedule "Maximum Length for Anchor Braces." Details of all equipment bracing shall be submitted for approval. In lieu of bracing with vertical supports, these items may be supported with hangers inclined at 45 degrees directed up and radially away from equipment and oriented symmetrically in 90-degree intervals on the horizontal plane, bisecting the angles of each corner of the equipment, provided that supporting members are properly sized to support operating weight of equipment when hangers are inclined at a 45-degree angle.

3.8 LIGHTING FIXTURES IN BUILDINGS

In addition to the requirements of the preceding paragraphs, lighting fixtures and supports will conform to the following:

3.8.1 Pendant Fixtures

Loop and hook or swivel hanger assemblies for pendant fixtures shall be fitted with a restraining device to hold the stem in the support position during earthquake motions. Pendant-supported fluorescent fixtures shall also be provided with a flexible hanger device at the attachment to the fixture channel to preclude breaking of the support. The motion of swivels or hinged joints shall not cause sharp bends in conductors or damage to insulation.

3.8.2 Recessed Fluorescent Fixtures

Recessed fluorescent individual or continuous-row mounted fixtures shall be supported by a seismic-resistant suspended ceiling support system and shall be bolted thereto at each corner of the fixture; or shall be provided with fixture support wires attached to the building structural members using two wires for individual fixtures and one wire per unit of continuous row mounted fixtures.

3.8.3 Assembly Mounted on Outlet Box

A supporting assembly that is intended to be mounted on an outlet box shall be designed to accommodate mounting features on 4-inch boxes, 3-inch plaster rings, and fixture studs.

3.8.4 Surface-Mounted Fluorescent Fixtures

Surface-mounted fluorescent individual or continuous-row fixtures shall be attached to a seismic-resistant ceiling support system. Fixture support devices for attaching to suspended ceilings shall be a locking-type scissor clamp or a full loop band that will securely attach to the ceiling support. Fixtures attached to underside of a structural

slab shall be properly anchored to the slab at each corner of the fixture.

3.8.5 Wall-Mounted Emergency Light Unit

Each wall-mounted emergency light unit shall be secured in a manner to hold the unit in place during a seismic disturbance.

3.8.6 Tests

In lieu of the requirements for equipment supports, lighting fixtures and the complete fixture-supporting assembly may be tested as specified hereinafter. Such tests shall be conducted by an approved and independent testing laboratory, and the results of such tests shall specifically state whether or not the lighting fixture supports satisfy the requirements given herein.

3.8.6.1 Test Equipment

To simulate earthquake motion, fixtures and supports shall be attached to a carriage suspended on rollers from an overhead track. A gear motor and crank assembly shall be used to provide oscillatory motion of approximately one cycle per second. The exact number of cycles per second and the actual dimensions of the crank apparatus shall be adjusted to produce a minimum carriage acceleration of 0.07g. The actual fixture-mounting surface shall be on the underside of the carriage and shall provide capacity for orienting the fixture in a horizontal plane in various positions, ranging from parallel to perpendicular to the line of traverse.

3.8.6.2 Test Requirements

All tests shall be conducted with the maximum fixture weight so as to produce the most severe loading conditions. Fixtures having stems shall be tested with the actual stem lengths to be used. Tests shall be of 1-minute duration with the mounting surface in the line of traverse, at 45 degrees to the line of traverse, and at 90 degrees to the line of traverse. A total of two fixtures shall be tested in each of the above positions. After each of the six tests, the complete stem assemblies from fixtures having stem assemblies shall be subjected to a tensile strength test. The sample shall withstand, without failure, a force of not less than four times the weight it is intended to support.

3.8.6.3 Acceptance

No component of a fixture nor its supports shall be accepted individually. For acceptance, the fixture and its supports shall exhibit no undue damage, and no component of the fixture shall fail or fall from the fixture during testing.

3.8.7 Design Criteria

In lieu of the above test requirements, lighting fixtures shall be designed to resist a lateral force of 28 percent of the fixture weight.

3.9 SUSPENDED CEILING ASSEMBLIES

The structural members of ceiling systems used primarily to support acoustical tile panels or acoustical panel lay-in tiles, with or without lighting fixtures, ceiling-mounted air terminals, and ceiling-mounted services, shall conform to the following:

3.9.1 Design Criteria

The main runners and cross-runners and their splices and intersection connections shall be designed for two times the design load or ultimate axial tension or compression (minimum 120 pounds). The connections at the splices and intersections shall be of a mechanical interlocking type that cannot easily be disengaged. All ceiling structural systems shall

be designed to withstand required vertical load as well as a lateral force of 5.6 percent of the ceiling weight. The ceiling weight shall include all lighting fixtures and other equipment that are laterally supported by the ceiling and shall be not less than 4.0 psf. Exception: Ceiling areas of 144 square feet or less surrounded by walls that connect directly to the structure above shall be exempt from the lateral-load standards of this specification.

3.9.2 Minimum Installation Requirements

Minimum installation requirements shall be in accordance with ASTM E 580 as follows:

3.9.2.1 Vertical Support

Hanger wires supporting a maximum tributary ceiling area of 16 square feet shall be a minimum of 10 gauge in diameter. The size of wires supporting a tributary ceiling area greater than 16 square feet shall be substantiated by design calculations. Hanger attachment devices used in ceiling systems not exceeding 4 psf shall be capable of supporting a minimum allowable load of 300 pounds. Hanger attachment devices used in ceiling systems exceeding 4 psf shall be capable of supporting the design load and shall be substantiated by design calculations. Hangers shall be plumb and shall not attach to or bend around interfering duct, pipes or similar obstructions. If hangers must be splayed more than one horizontal to six vertical, the resulting horizontal force shall be offset by bracing or counter-splaying, and substantiated by design calculations. The terminal end of each cross runner or main runner shall be supported independently and within 8 inches of a wall.

3.9.2.2 Lateral Support

In lieu of the design criteria stated above, where ceiling loads do not exceed 4 psf, lateral support for the ceiling system may be provided by four galvanized wires of minimum No. 12 gauge, splayed in four directions, 90 degrees apart, and connected to the main runner with 2 inches of the cross runner and to the structure above at an angle not exceeding 45 degrees from the plane of the ceiling. These lateral support points shall be placed 12 feet on center in each direction with the first point within 4 feet from each wall. Allowances shall be made for lateral movement of the system. Main runners and cross runners may be attached at two adjacent walls with clearance between the walls and the runners maintained at the other two walls.

3.9.3 Lighting Fixture and Air Diffuser Supports

Lighting fixture and air diffuser supports shall be designed and installed to meet the requirements of equipment supports in the preceding paragraphs of this specification with the following exceptions:

a. Recessed lighting fixtures not over 56 pounds in weight and suspended and pendent-hung fixtures not over 20 pounds in weight may be supported and attached directly to the ceiling system runners by a positive attachment such as screws or bolts.

b. Air diffusers that weigh not more than 20 pounds and that receive no tributary loading from ductwork may be positively attached to and supported by the ceiling runners.

3.10 BRIDGE CRANES AND MONORAILS

Bridges cranes and monorails shall be designed to accommodate the following horizontal equivalent static force of 0.11 times weight, applied in any direction to the center of gravity of the equipment. The weight of such equipment need not include any live load, and the equivalent static force so computed will be assumed to act nonconcurrently with other prescribed nonseismic horizontal forces when considering the design of the crane and monorails. The crane design shall be suitable for the forces previously specified in addition to the

normal horizontal loads prescribed by standards cited in other sections of these specifications. The crane manufacturer shall submit a proper certification that the crane system has been checked for seismic forces as specified herein and found satisfactory.

3.11 MISCELLANEOUS EQUIPMENT

The following specific items of equipment to be furnished under this contract shall be constructed and assembled so as to be capable of withstanding the horizontal equivalent static force of 0.06 times the operating weight of the equipment, at vertical center of gravity of the equipment without causing permanent deformation, dislocations, separation of components, or other damage, which would render the equipment inoperative for significant periods of time following an earthquake.

Miscellaneous Equipment

Air-Handling Units
Transformers
Switch Boards and Switch Gears
Motor Control Centers
Free Standing Electric Motors

3.12 SCHEDULES

3.12.1 Maximum Span for Transverse Sway Braces in Seismic Zone 4

Pipe Diameter	Std. Wgt. Steel Pipe - 40S		Ex. Strong Steel Pipe - 80S		Copper Tube Type L	
(in.)	*L(ft.)	*F(lbs.)	*L(ft.)	*F(lbs.)	*L(ft.)	*F(lbs.)
1	22	70	22	80	11	17
1-1/2	25	140	26	180	12	35
2	29	220	30	290	14	70
2-1/2	32	380	33	460	15	110
3	34	550	35	710	17	150
3-1/2	36	730	38	930	18	220
4	39	960	40	1,200	19	300
5	41	1,440	44	1,900	20	470
6	45	2,120	46	2,750	22	730
8	49	3,740	54	5,150	26	1,550
10	54	6,080	59	7,670	28	2,630
12	58	8,560	61	10,350	31	3,950

*L = Maximum span between lateral supports multiplied by 1.35 for Zone 1.

*F = Horizontal force on the brace multiplied by 0.3 for Zone 1.

NOTE: Bracing shall consist of at least one vertical angle 2 x 2 x 16 gauge and one diagonal angle of the same size.

3.12.2 Maximum Length for Anchor Braces

Type	Size (Inches)	Maximum length* (Feet/Inches)	Allowable Loads* (kips)
Angles	1-1/2 x 1-1/2 x 1/4	4-10	5.7
	2 x 2 x 1/4	6-6	7.8
	2-1/2 x 1-1/2 x 1/4	8-0	9.8
	3 x 2-1/2 x 1/4	8-10	10.8
	3 x 3 x 1/4	9-10	11.9
Rods	3/4	3-1	3.7
	7/8	3-8	5.0
Flat Bars	1-1/2 x 1/4	1-2	3.1
	2 x 1/4	1-2	4.1
	2 x 3/8	1-9	6.2
Pipes (40S)	1	7-0	4.1
	1-1/4	9-0	5.5
	1-1/2	10-4	6.6
	2	13-1	8.9

*Based on the slenderness ratio of 1/r = 200 and ASTM A 36 steel.

3.12.3 Minimum Bolt Sizes, Cast-In-Place Anchor Bolts

Maximum Equipment Weight (Pounds)	Minimum Bolt Sizes (Inches)* Zone 4	Zone 3	Zone 2	Zone 1
500	1/2	1/2	1/2	1/2
1,000	1/2	1/2	1/2	1/2
5,000	1/2	1/2	1/2	1/2
10,000	1/2	1/2	1/2	1/2
20,000	1/2	1/2	1/2	1/2
30,000	5/8	5/8	1/2	1/2
50,000	7/8	3/4	1/2	1/2
100,000	1-1/8	1	3/4	1/2

*Based on four bolts per item, a minimum embedment of 12 bolts diameters, a minimum bolt spacing of 16 bolts diameters and a minimum edge distance of 12 bolts diameters. Use equivalent total cross-sectional area when more than four bolts per item are provided. Anchor bolts must conform to ASTM A 307. Anchor bolts shall have an embedded straight length equal to at least twelve times nominal diameter of the bolt.

-- o O o --

SECTION 13120

METAL BUILDINGS

PART 1 GENERAL

1.1 REFERENCES

The publications listed below form a part of this specification to the extent referenced. The publications are referred to in the text by basic designation only.

ALUMINUM ASSOCIATION (AA)

AA ASD-1	(1990) Aluminum Standards and Data
AA SAS-30	(1986) Aluminum Construction Manual Series - Section 1 Specifications for Aluminum Structures

AMERICAN ARCHITECTURAL MANUFACTURERS ASSOCIATION (AAMA)

AAMA 101	(1988) Voluntary Specifications for Aluminum Prime Windows and Sliding Glass Doors

AMERICAN INSTITUTE OF STEEL CONSTRUCTION (AISC)

AISC FCD-90	(1990) AISC Quality Certification Program Description
AISC S303	(1992) Code of Standard Practice for Steel Buildings and Bridges
AISC S329	(1986) Allowable Stress Design Specification for Structural Joints Using ASTM A 325 or ASTM A 490 Bolts
AISC S335	(1989) Specification for Structural Steel Buildings - Allowable Stress Design and Plastic Design

AMERICAN IRON AND STEEL INSTITUTE (AISI)

AISI SG-673	(1986) Cold-Formed Steel Design Manual

AMERICAN SOCIETY FOR TESTING AND MATERIALS (ASTM)

ASTM A 36	(1991) Structural Steel
ASTM A 53	(1990b) Pipe, Steel, Black and Hot-Dipped, Zinc-Coated Welded and Seamless
ASTM A 252	(1990) Welded and Seamless Steel Pipe Piles
ASTM A 325	(1992a) Structural Bolts, Steel, Heat Treated, 120/105 ksi Minimum Tensile Strength
ASTM A 446	(1991) Steel Sheet, Zinc-Coated (Galvanized) by the Hot-Dip Process, Structural (Physical) Quality
ASTM A 463	(1988) Steel Sheet, Cold-Rolled, Aluminum-Coated, Type 1 and Type 2
ASTM A 490	(1992a) Heat-Treated Steel Structural Bolts, 150 ksi Minimum Tensile Strength

ASTM A 500	(1990a) Cold-Formed Welded and Seamless Carbon Steel Structural Tubing in Rounds and Shapes
ASTM A 501	(1989) Hot-Formed Welded and Seamless Carbon Steel Structural Tubing
ASTM A 529	(1992) High-Strength Carbon-Manganese Steel of Structural Quality
ASTM A 570	(1992) Steel, Sheet and Strip, Carbon, Hot-Rolled, Structural Quality
ASTM A 572	(1992a) High-Strength Low-Alloy Columbium-Vanadium Steels of Structural Quality
ASTM A 588	(1991a) High-Strength Low-Alloy Structural Steel with 50 ksi (345 MPa) Minimum Yield Point to 4 in. (100 mm) Thick
ASTM A 606	(1991a) Steel, Sheet and Strip, High-Strength, Low-Alloy, Hot-Rolled and Cold-Rolled, with Improved Atmospheric Corrosion Resistance
ASTM A 607	(1992a) Steel, Sheet and Strip, High-Strength, Low-Alloy, Columbium or Vanadium, or Both, Hot-Rolled and Cold-Rolled
ASTM A 618	(1990a) Hot-Formed Welded and Seamless High-Strength Low-Alloy Structural Tubing
ASTM A 792	(1989) Steel Sheet, Aluminum-Zinc Alloy-Coated by the Hot-Dip Process
ASTM B 117	(1990) Salt Spray (Fog) Testing
ASTM B 209	(1992a) Aluminum and Aluminum-Alloy Sheet and Plate
ASTM B 221	(1992a) Aluminum and Aluminum-Alloy Extruded Bars, Rods, Wire, Shapes, and Tubes
ASTM B 241	(1992a) Aluminum and Aluminum-Alloy Seamless Pipe and Seamless Extruded Tube
ASTM B 308	(1992a) Aluminum-Alloy 6061-T6 Standard Structural Shapes
ASTM B 429	(1992a) Aluminum-Alloy Extruded Structural Pipe and Tube
ASTM C 518	(1991) Steady-State Heat Flux Measurements and Thermal Transmission Properties by Means of the Heat Flow Meter Apparatus
ASTM C 553	(1992) Mineral Fiber Blanket Thermal Insulation for Commercial and Industrial Applications
ASTM C 612	(1993) Mineral Fiber Block and Board Thermal Insulation
ASTM D 522	(1992) Mandrel Bend Test of Attached Organic Coatings
ASTM D 523	(1989) Specular Gloss

ASTM D 714	(1987) Evaluating Degree of Blistering of Paints
ASTM D 968	(1981; R 1991) Abrasion Resistance of Organic Coatings by Falling Abrasive
ASTM D 1308	(1987) Effect of Household Chemicals on Clear and Pigmented Organic Finishes
ASTM D 1654	(1992) Evaluation of Painted or Coated Specimens Subjected to Corrosive Environments
ASTM D 2244	(1989) Calculation of Color Differences from Instrumentally Measured Color Coordinates
ASTM D 2247	(1992) Testing Water Resistance of Coatings in 100 Percent Relative Humidity
ASTM D 2794	(1990) Resistance of Organic Coatings to the Effects of Rapid Deformation (Impact)
ASTM D 3359	(1992a) Measuring Adhesion by Tape Test
ASTM D 4214	(1989) Evaluating the Degree of Chalking of Exterior Paint Films
ASTM E 84	(1991a) Surface Burning Characteristics of Building Materials
ASTM E 96	(1993) Water Vapor Transmission of Materials
ASTM G 23	(1992) Operating Light-Exposure Apparatus (Carbon-Arc Type) With and Without Water for Exposure of Nonmetallic Materials

AMERICAN WELDING SOCIETY (AWS)

AWS D1.1	(1992) Structural Welding Code - Steel

MATERIAL HANDLING INSTITUTE (MHI)

MHI CMAA 70	(1988) Electric Overhead Traveling Cranes

METAL BUILDING MANUFACTURERS ASSOCIATION (MBMA)

MBMA-01	(1986; Errata; Supple 1990) Low Rise Building Systems Manual

SHEET METAL & AIR CONDITIONING CONTRACTORS' NATIONAL ASSOCIATION (SMACNA)

SMACNA-02	(1987) Architectural Sheet Metal Manual

STEEL DOOR INSTITUTE (SDOI)

SDOI SDI 100	(1991) Standard Steel Doors and Frames

STEEL WINDOW INSTITUTE (SWI)

SWI-01	(1989) The Specifier's Guide to Steel Windows

1.2 GENERAL

Metal building manufacturer shall be a member of MBMA and shall be qualified under the ASIC quality certification program category MB. Metal buildings shall have vertical walls and gable roofs. Roof slope shall be as indicated. Buildings shall be single-span structures with one of the following types: manufacturer and not less than those indicated, but exceeding the indicated dimensions only by the amount of the closest standard size thereto. Frame and covering may be matched and prepunched to receive fasteners, or the drilling of holes for fasteners may be performed in the field. The completed buildings shall be free of excessive noise from wind-induced vibrations under the ordinary weather conditions to be encountered at the locations where the building is erected, and meet all specified design requirements. Roof deck assemblies shall be Class 90 as defined in UL 580. Erection of building structure shall be performed by a contractor having specialized experience in the erection of preengineered metal buildings for a period of at least 3 years. A brief list of similar projects by this contractor shall be submitted with detail drawings.

1.3 DESIGN REQUIREMENTS

1.3.1 Design Conditions

Design loads shall be developed using procedures contained in MBMA-01. The following data shall be used in developing design loads.

a. Building system dead loads.

b. Collateral loads of 10 pounds per square foot. Collateral loads are weights of other permanent features such as sprinklers, mechanical systems, electrical systems, partitions, and ceilings. The approximate location of collateral loads are indicated on the drawings.

c. Roof live loads of 20 pounds per square foot.

d. Roof snow loads of 20 pounds per square foot with a building importance factor of 1.0. A conversion factor of 0.7 shall be used for the ground-to-roof conversion factor.

e. Basic wind speed of 80 miles per hour (fastest mile) with an importance factor of 1.0.

f. Loads from cranes, capacity as shown on the drawings.

g. Concentrated loads as indicated on the drawings.

h. Seismic Zone 1.

1.3.2 Framing and Structural Members

Structural steel members shall be designed in accordance with AISC 326. Structural cold-formed steel framing members shall be designed in accordance with AISI 01. Aluminum framing and structural members shall conform to AA-02 and shall be designed in accordance with AA-04. Framed openings shall be designed to structurally replace the covering and framing displaced. Welding of steel shall conform to requirements of AWS D1.1, and welding of aluminum shall conform to requirements of AA-04.

1.3.3 Noise Levels

Control building: The building components enclosing office space shall be designed to provide a maximum noise level of 65 dB inside the office. The current exterior noise level is 85 dB.

1.3.4 Exterior Covering

Except as otherwise specified, steel covering shall be designed in accordance with AISI 01. Aluminum covering shall be designed in accordance with the AA 02. Maximum wind load deflection for wall panels and the maximum live deflection for roof panels shall not exceed 1/60th of the span between supports for aluminum or 1/80th of the span between supports for steel. Maximum deflections shall be based on sheets continuous across two or more supports with sheets unfastened and fully free to deflect.

1.3.5 Gutters

Gutters and downspouts shall be designed to carry the flow from the roof resulting from rain falling at the rate of 5 inches per hour for a 5-minute duration.

1.3.6 Window Louvers

Louvers shall be fixed-blade, rainproof design. Provide size and free area velocities shown in louver schedule on Drawing H-15.

1.3.7 Prefabricated Roof Curbs

Roof curbs shall be sizes indicated on the Drawings.

1.4 SUBMITTALS

The following shall be submitted in accordance with Section 01300 SUBMITTAL DESCRIPTIONS:

SD-01 Data

Gaskets and Insulating Compounds.

Descriptive data.

Windows, Doors, Louvers, Gutters, Downspouts.

Descriptive data for each if not fully covered by detail drawings.

SD-04 Drawings

Metal Building Systems.

Detail drawings consisting of catalog cuts; design and erection drawings; complete design analysis and design for foundation; shop painting and finishing specifications; instruction manuals; manufacturer's recommended erection methods and procedures and other data as necessary to clearly describe design, material, sizes, layouts, construction details, fasteners, and erection. Manufacturer's recommended erection methods and procedures shall describe the basic sequence of assembly, temporary bracing, shoring, and related information necessary for erection of the metal building including its structural framework and components. For all metal building designs, except those programmed on a computer, the detail drawings shall be accompanied by engineering design calculations for structural and covering components. For computer programmed designs, detail drawings shall be accompanied by stress values and a certificate, signed by a registered professional engineer, stating the design criteria and procedures used and attesting to the adequacy and accuracy of the design. A brief list of locations where buildings of similar design have been used shall be included with the detail drawings and shall include information regarding date of installation, name and address of owner, and how the structure is used.

SD-13 Certificates

Metal Building Systems.

A Certificate of compliance from the metal building manufacturer stating that the metal building furnished for this project complies with the material and fabrication requirements of this section. The certificates shall also state that the metal building was designed for the roof slope indicated.

SD-14 Samples

Accessories.

One sample of each type of flashing, trim, closure, cap and similar items. Size shall be sufficient to show construction and configuration.

Roof and Wall Covering.

One piece of each type to be used, 250 mm (9-inches) long, full width. The sample for factory color finished covering shall be accompanied by certified laboratory test reports showing that the sheets to be furnished are produced under a continuing quality control program and that a representative sample consisting of not less than 5 pieces has been tested and has met the quality standards specified for factory color finish.

Fasteners.

Two samples of each type to be used, with statement regarding intended use.

Insulation.

One piece of each type to be used, and descriptive data covering installation.

Sealant.

One sample, approximately 0.5 kg, (1 pound,) and descriptive data.

Ceiling and Wall Liners.

One piece, 250 mm (9 inches) long, full width.

1.5 DELIVERY AND STORAGE

Materials shall be delivered to the site in a dry and undamaged condition and stored out of contact with the ground. Materials other than framing and structural members shall be covered with weathertight coverings and kept dry. Storage accommodations for roof and wall covering shall provide good air circulation and protection from surface staining.

1.6 GUARANTEE

Notwithstanding the requirements of clause "Warranty of Construction" specified in Section 01740, the building shall be guaranteed against water leaks arising out of or caused by ordinary wear and tear by the elements for a period of 5 years. Such guarantee shall start upon final acceptance of the work or the date the Government takes possession, whichever is earlier.

PART 2 PRODUCTS

2.1 BUILDING COMPONENTS

2.1.1 General

The size and weight of prefabricated components shall permit easy handling in the field; and the maximum size and weight of any component shall be suitable for transportation by commercial carries. Each piece or part of

the assembly shall be clearly and legibly marked to correspond with the detail drawings.

2.1.2 Framing and Structural Members

Steel 1/8 inch or more in thickness shall conform to ASTM A 36, ASTM A 529, ASTM A 572, or ASTM A 588. Uncoated steel less than 1/8 inch in thickness shall conform to ASTM A 570, ASTM A 606, or ASTM A 607. Galvanized steel shall conform to ASTM A 446, G 90 coating designation, 0.045-inch minimum thickness. Aluminum-zinc coated steel shall conform to ASTM A 792, AZ55 coating designation, 0.045-inch minimum thickness. Aluminum shall conform to ASTM B 209, ASTM B 221, or ASTM B 308. Structural pipe shall conform to ASTM A 53, ASTM A 252, ASTM A 500, ASTM A 501, ASTM A 618, ASTM B 221, ASTM B 241 or ASTM B 429. All connections for steel shall conform to ASIC 326 or AISI-01. for aluminum, mechanical connections, fabrication, and testing shall conform to AA-04. Erection bolts and anchors bolts shall be of standard sizes and types. Holes for bolts shall be made in the shop, prior to assembly of structural members in the field.

2.1.3 Wall Covering and Roof Covering Panels

Panels shall be either steel or aluminum and shall have a factory color finish. Wall panels shall have configurations or overlapping adjacent sheets or interlocking ribs for securing adjacent sheets. Roof panels shall be a standing seam metal system. System for securing the roof covering to structural framing members shall be concealed clip fastening system with nonpenetrating fasteners. Concealed clip fastened roof covering shall be mechanically field crimped standing seam type. Roof covering using concealed clip fastener system shall have not fasteners penetrating the panels except at the ridge, eave, and end laps. The ridge shall not have exposed fasteners. Wall covering shall be fastened to framework using exposed fasteners. Length of sheets shall be sufficient to cover the entire length of any unbroken roof slope or the entire height of any unbroken wall surface when such slope or height is 30 feet or less. When length of run exceeds 30 feet, each sheet in run shall extend over 2 or more spans. Sheets longer than 30 feet may be furnished if approved by the Contracting Officer. Width of sheets with overlapping configurations shall provide not less than 24 inches of coverage in place; width of sheets with interlocking ribs shall provide not less than 12 inches of coverage in place. Height of the standing seam of interlocked panels for adjacent roofs sheets shall be the building manufacturer's standard. Design provisions shall be made for thermal expansion and contraction consistent with the type of system to be used. All sheets shall be square cut, except gable end wall sheets may be cut in the shop to correspond to the roof slope and may have a horizontal joint at the eave line.

2.1.3.1 Steel Covering

Zinc-coated steel conforming to ASTM A 446, G 90 coating designation; aluminum-zinc alloy coated steel conforming to ASTM A 792, AZ55 coating; or aluminum-coated steel conforming to ASTM A 463, Type 2. Roof and wall covering shall be 0.024-inch thick minimum, factory color finished. If used as a diaphragm, steel covering shall be 0.0299-inch or thicker.

2.1.3.2 Aluminum Covering

Alloy conforming to ASTM B 209, temper as required for the forming operation, minimum 0.813 mm (0.032-inch) thick, factory color finished.

2.1.4 Factory Insulated Panels

Insulated wall and roof units shall be factory-fabricated units with insulating core between metal face sheets, securely fastened together and uniformly separated with rigid spacers, facing of steel or aluminum of composition and gauge specified for covering, constructed in a manner that will eliminate condensation on interior of panel. Insulation shall be compatible with adjoining materials; nonrunning and nonsettling; capable of retaining its R-value for the life of the metal facing sheets; and unaffected by extremes of temperature and humidity. The assembly shall have a

flame spread rating not higher than 25, and smoke developed rating not higher than 50 when tested in accordance with ASTM E 84. The insulation shall remain odorless, free from mold, and not become a source of food and shelter for insects. Units shall be not less than 203.2 mm (8 inches) wide and shall be in one piece for unbroken wall heights or roof slopes up to 7.32 m. (24 feet.)

2.1.5 Accessories

Flashing, trim, metal closure strips, caps, and similar metal accessories shall be not less than the minimum thickness specified for covering. Accessories shall be compatible with the system furnished. Exposed metal accessories shall have a factory finish to match the building finish. Molded closure strips shall be bituminous-saturated fiber, closed-cell or solid-cell synthetic rubber or neoprene, or polyvinyl chloride premolded to match configuration of the covering and shall not absorb or retain water.

2.1.6 Fasteners

Fasteners for wall and roof panels shall be zinc-coated steel, aluminum, corrosion resisting steel, or nylon capped steel, type and size specified below or as otherwise approved for the applicable requirements. Fasteners for accessories shall be the manufacturer's standard. Aluminum or corrosion resisting steel fasteners shall be used only with aluminum sheets. Exposed roof fasteners shall be gasketed or have gasketed washers on the exterior side of the covering to waterproof the fastener penetration. Washer material shall be compatible with the covering; have a minimum diameter of 10 mm (3/8 inch) for structural connections; and gasketed portion of fasteners or washers shall be neoprene or other equally durable elastomeric material approximately 3.2 mm (1/8-inch) thick. When wall covering is factory color finished, exposed wall fasteners shall be color finished or provided with plastic color caps to match the covering. Nonpenetrating fastener system using concealed clips shall be manufacturer's standard for the system provided.

2.1.6.1 Screws

Screws shall be not less than No. 14 diameter if self-tapping type and not less than No. 12 diameter if self-drilling and self-tapping type.

2.1.6.2 End-Welded Studs

Automatic end-welded studs shall be shouldered type with a shank diameter of not less than 4.8 mm (3/16 inch) and cap or nut for holding covering against the shoulder.

2.1.6.3 Explosive Actuated Fasteners

Fasteners for use with explosive actuated tools shall have a shank diameter of not less than 3.68 mm (0.145 inch) with a shank length of not less than 12.7 mm (1/2 inch) for fastening panels to steel and not less than 25.4 mm (1 inch) for fastening panels to concrete.

2.1.6.4 Blind Rivets

Blind rivets shall be aluminum with 4.8 mm (3/16-inch) nominal diameter shank or stainless steel with 3.2 mm (1/8-inch) nominal diameter shank. Rivets shall be threaded stem type if used for other than the fastening of trim. Rivets with hollow stems shall have closed ends.

2.1.6.5 Bolts

Bolts shall be not less than 6.4 mm (1/4-inch) diameter, shouldered or plain shank as required, with proper nuts.

2.1.7 Gutters and Downspouts

Gutters and downspouts shall be fabricated of aluminum, zinc-coated steel or aluminum-zinc alloy coated steel. All accessories necessary for the

complete installation of the gutters and downspouts shall be furnished. Accessories shall include gutter straps, downspout elbows, downspout straps and fasteners fabricated from metal compatible with the gutters and downspouts.

2.1.8 Louvers

Louvers shall be fabricated of aluminum, zinc-coated steel, or aluminum-zinc alloy coated steel; and shall be furnished with bird screens. Manually operated louvers shall be designed to be opened and closed from the operating floor.

2.1.9 Prefabricated Roof Curbs

Insulated roof curbs shall be fabricated of 18-gage zinc-coated steel or zinc-aluminum coated steel, as specified for roofing panels. Welded construction and integral conforming notches with roof panel configuration; integral cricket. Construct curb to exact roof pitch keeping fan component level; 8 inch minimum height on ridge side. Provide watertight seals at perimeter. See Drawings for sizes required.

2.1.10 Minimum Thickness

Materials, other than roof and wall covering and wall liner shall be of thicknesses necessary to conform to design requirements, however the following table lists the minimum thicknesses which will be allowed:

Items	Minimum Uncoated Thickness
Light Gage Steel-Structural Members other than Wall and Roof Covering	0.048 Inch
Gable and Eave Trim, Fascia Closure Strips, Rake Flashing, Coping and Liner Panels	
Steel	0.018 Inch
Aluminum	0.032 Inch
Gutters and Downspouts	
Steel	0.018 Inch
Aluminum	0.032 Inch
Roof Ventilators	
Steel	0.018 Inch
Aluminum	0.032 Inch
Louvers	
Steel	0.048 Inch
Aluminum	0.064 Inch

2.1.11 Doors (Exterior and Interior Partitions)

2.1.11.1 Hinged Doors

Hinged doors and frames shall conform to FS RR-D-575, size and heavy-duty hardware as scheduled herein. Exterior doors shall have top edges closed flush and sealed against water penetration. Hardware shall conform to BHMA A156.1, BHMA A156.2, BHMA 156.4, BHMA A156.6, AND BHMA 156.7 as applicable to the types scheduled.

2.1.12 Windows

Windows shall be of steel in accordance with SWI-01 or of aluminum in accordance with AAMA 101. Windows shall be of the type shown, furnished complete with operating and locking hardware, glazing, screened panels, weatherstripping, and framing and fasteners to properly install the windows.

2.1.13 Insulation

Thermal resistance of insulation shall be not less than the R-values shown. R-values shall be determined at 24 degrees C (75 degrees F) in accordance with ASTM C 518. Insulation shall be a standard product of a manufacturer, factory-marked or identified with manufacturer's name or trademark and R-value. Identification shall be on individual pieces or individual packages. Insulation shall have a facing providing a permeability of 1.14 nanograms per Pascal per second per square meter (0.02 perm) or less when tested in accordance with ASTM E 96. Facing shall be of 0.051 mm (2 mil) thick white vinyl backed with 150 mm by 150 mm (6 inch by 6 inch) glass scrim and 0.018 mm (0.7 mil) thick metal foil laminate. Reinforced foil with a natural finish may be used for facing in concealed locations. Facings and finishes shall be factory applied.

2.1.13.1 Rigid Or Semirigid Board Insulation

Rigid or semirigid board insulation shall conform to FS HH-I-558, Form A, Class 1 or Class 2. Exposed insulation shall have a white nondusting and nonshedding painted finish.

2.1.13.2 Blanket Insulation

Blanket insulation shall conform to FS HH-I-558, Form B, Type I, Class 6. Exposed insulation shall have a white sheet vinyl facing.

2.1.14 Insulation Retainers

Retainers shall be type, size and design necessary to adequately hold the insulation and to provide a neat appearance. Metallic retaining members shall be nonferrous or have a nonferrous coating. Nonmetallic retaining members, including adhesives used in conjunction with mechanical retainers or at insulation seams, shall have a fire resistance classification not less than that permitted for the insulation.

2.1.15 Wall Liners and Roof Liners (where indicated on Drawings)

Wall liners shall be 0.6096 mm (0.024-inch) thick minimum for aluminum or 0.455 mm (0.018-inch) thick minimum for steel of composition specified for covering, and formed or patterned to prevent waviness and distortion, and shall extend from the floor to the ceiling. Matching metal trim shall be provided at base of wall liner, top of wall liner, around openings in walls and roof and over interior and exterior corners. Wall liners shall have a factory color finish of the quality specified for the roof and wall panels. Colors shall be as indicated.

2.1.16 Sealant

Sealant shall be an elastomeric type containing no oil or asphalt. Exposed sealant shall cure to a rubberlike consistency. Concealed sealant may be the nonhardening type. Sealant for standing seam panels shall be factory applied conforming to manufacturer's recommendations.

2.1.17 Gaskets

Gaskets and insulating compounds shall be nonabsorptive and suitable for insulating contact points of incompatible materials. Insulating compounds shall be nonrunning after drying.

2.2 FACTORY COLOR FINISH

Wall and roof panels shall have a factory color finish applied on the exposed side. The exterior finish shall consist of a polyvinylidene fluoride coating applied to a cleaned, pretreated and primed surface. Color shall be as indicated. The exterior coating shall have a dry film thickness of not less than 8 mil, exclusive of the primer. The interior color finish shall consist of a backer coat with a dry film thickness of 0.5 mil. The interior and exterior color finish shall meet the test requirements specified below. The manufacturer shall have conducted tests

on previously manufactured sheets of the same type and finish as proposed for the project. The term "appearance of base metal" refers to the metal coating on steel or the aluminum base metal.

a. Salt Spray Test: A sample of the sheets shall withstand a salt spray test for a minimum of 1000 hours in accordance with ASTM B 117, including the scribe requirement in the test. Immediately upon removal of the panel from the test, the coating shall receive a rating of 10, no blistering, as determined by ASTM D 714; and a rating of 10, 1/16 inch) failure at scribe, as determined by ASTM D 1654.

b. Formability Test: When subjected to a 180-degree bend over a 1/8 inch diameter mandrel in accordance with ASTM D 522, the coating film shall show no evidence of fracturing to the naked eye.

c. Accelerated Weathering, Chalking Resistance and Color Change: A sample of the sheets shall withstand a weathering test a minimum of 2000 hours in accordance with ASTM G 23, using a Type D apparatus without cracking, peeling, blistering, loss of adhesion of the protective coating, or corrosion of the base metal. Protective coating that can be readily removed from the base metal with a pen-knife or similar instrument, shall be considered as an area indicating loss of adhesion. After the 2000-hour weatherometer test, the exterior coating shall not chalk greater than No. 8 rating in accordance with ASTM D 659 test procedures. After the 2000-hour weatherometer test, exterior coating color change shall not exceed 2 NBS units in accordance with ASTM D 2244.

d. Humidity Test: When subjected to a humidity cabinet in accordance with ASTM D 2247 for 1500 hours, a scored panel shall show no signs of blistering, cracking, creepage or corrosion.

e. Impact Resistance: Factory-painted sheet shall withstand direct and reverse impact in accordance with ASTM D 2794 equal to 1.5 times metal thickness in mils, expressed in inch-pounds, with no loss of adhesions.

f. Abrasion Resistant Test: When subjected to the falling sand test in accordance with ASTM D 968, the coating system shall withstand a minimum of 100 liters of sand before the appearance of the base metal.

g. Specular Gloss: Finished surfaces shall have a specular gloss value of 10 or less at an angle of 85 degrees when measured in accordance with ASTM D 523.

2.3 SHOP PAINTING

Ferrous surfaces shall be cleaned of oil, grease, loose rust, loose mill scale, and other foreign substances and shop primed. Primer coating shall be in accordance with the manufacturer's standard system. Gutters, downspouts, and louvers shall be shop painted in the indicated color.

PART 3 EXECUTION

3.1 ERECTION

3.1.1 General

Erection shall be in accordance with the approved erection instructions and drawings and with applicable provision of AISC 326. Finished structure shall be proven weathertight. Dissimilar materials which are not compatible when contacting each other shall be insulated from each other by means of gaskets or insulating compounds. Framing members fabricated or modified on site shall be saw or abrasive cut; bolt holes shall be drilled. On-site flame cutting of framing members, with the exception of small access holes

in structural beam or column webs, shall not be permitted. Improper or mislocated drill holes shall be plugged with an oversize screw fastener and gasketed washer; however, sheets with an excess of such holes or with such holes in critical locations shall not be used. Exposed surfaces shall be kept clean and free from sealant, metal cuttings, excess material from thermal cutting, and other foreign materials. Exposed surfaces which have been thermally cut shall be finished smooth within a tolerance of 3.2 mm (1/8 inch). Stained, discolored or damaged sheets shall be removed from the site. Concrete work is specified in Section 03300 CONCRETE FOR BUILDING CONSTRUCTION.

3.1.2 Framing and Structural Members

Anchor bolts shall be accurately set by template while the concrete is in a plastic state. Uniform bearing under base plates and sill members shall be provided using a nonshrinking grout when necessary. Members shall be accurately spaced to assure proper fitting of covering. Separate leveling plates under column base plates shall not be used. As erection progresses, the work shall be securely fastened to resist the dead load and wind and erection stresses.

3.1.3 Wall Covering and Roof Covering

Wall covering shall be applied with the longitudinal configurations in the vertical position. Roof covering shall be applied with the longitudinal configurations in the direction of the roof slope. Accessories shall be fastened into framing members, except as otherwise approved. Closure strips shall be provided as indicated and where necessary to provide weathertight construction.

3.1.3.1 Lap Type Panels with Exposed Fasteners

Except for self-framing buildings, end laps shall be made over framing members with fasteners into framing members approximately 50 mm (2 inches) from the end of the overlapping sheet. Side laps shall be laid away from the prevailing winds. Side lap distances, end lap distances, joint sealing, and spacing and fastening of fasteners shall be in accordance with the manufacturer's standard practice insofar as the maximum spacings specified are not exceeded and provided such standard practice will result in a structure which will be free from water leaks and meet design requirements. Spacing of fasteners shall present an orderly appearance and shall not exceed: 200 mm (8 inches) on center at end laps of covering, 300 mm (12 inches) on center at connection of covering to intermediate supports, 300 mm (12 inches) on center at side laps of roof coverings, and 450 mm (18 inches) on center at side laps of wall coverings except when otherwise approved. Side laps and end laps of roof and wall covering and joints at accessories shall be sealed. Method of applying joint sealant shall conform to manufacturer's recommendation. Fasteners shall be installed in straight lines within a tolerance of 15 mm (1/2 inch) in the length of a bay. Fasteners shall be driven normal to the surface and to a uniform depth to properly seat the gasketed washers.

3.1.3.2 Concealed Fastener Wall Panels

Panels shall be fastened to framing members with concealed fastening clips or other concealed devices standard with the manufacturer. Spacing of fastening clips and fasteners shall be in accordance with the manufacturer's written instructions insofar as the maximum fastener spacings specified are not exceeded and provided such standard practice will result in a structure which will be free from water leaks and meet design requirements. Spacing of fasteners and anchor clips along the panel interlocking ribs shall not exceed 300 mm (12 inches) on center except when otherwise approved. Fasteners shall not puncture covering sheets except as approved for flashing, closures, and trim; exposed fasteners shall be installed in straight lines. Interlocking ribs shall be sealed according to manufacturer's recommendations. Joints at accessories shall be sealed.

3.1.3.3 Concealed Clip, Standing Seam Room Panels

Roof panels shall be fastened to framing members with concealed fastening clips or other concealed devices standard with the manufacturer. Spacing of fastening clips and fasteners shall be in accordance with the manufacturer's written instructions. End laps, when approved by the Contracting Officer, shall be made over framing members. Fasteners shall not puncture covering sheets except as approved for flashing, closures, and trim. Exposed fasteners shall be installed in straight lines. Interlocking ribs Oshall be sealed if standard or recommended by the manufacturer. End laps of covering sheets and joints at accessories shall be sealed. Seams between roof panels shall be mechanically field formed with a seamer at the project site.

3.1.4 Gutters and Downspouts

Gutters and downspouts shall be rigidly attached to the building. Gutters shall be installed to provide drainage and shall be designed with adequate provisions for expansion and contraction.

3.1.5 Louvers and Roof Curbs

Louvers and roof curbs shall be rigidly attached to the supporting construction in a manner to assure a rain-tight installation.

3.1.6 Doors and Windows

Doors and windows, including frames and hardware, shall be securely anchored to the supporting construction, shall be installed plumb and true, and shall be adjusted as necessary to provide proper operation. Joints at doors and windows shall be sealed to provide weathertight construction and in accordance with the manufacturer's recommendations.

3.1.7 Insulation

Insulation shall be installed as indicated and in accordance with manufacturer's instructions. Final appearance of installed insulation shall be free of unsightly sags and wrinkles.

3.1.8 Wall and Roof Liner

Wall and roof liner shall be securely fastened into place in accordance with the manufacturer's recommendation and in a manner to present a neat appearance.

3.2 FIELD PAINTING

Immediately upon detection, abraded or corroded spots on shop-painted surfaces shall be wire brushed and touched up with the same material used for the shop coat. Shop-primed ferrous surfaces exposed on the outside of the building and all shop-primed surfaces of doors and windows shall be painted with two coats of an approved exterior enamel. Factory color finished surfaces shall be touched up as necessary with the manufacturer's recommended touch-up paint.

3.3 HARDWARE SCHEDULE

HW-1	Hollow Metal Doors, Single, Exterior	
1-1/2 pr.	Hinges, A5112, 4-1/2" x 4-1/2"	626
1 ea.	Lockset, F81, Grade 1	626
1 ea.	Closer, C02021 Series	
1 ea.	Mop plate, J103	626
1 set	Weatherseal	
1 ea.	Threshold J12190	
HW-2	Hollow Metal Doors, Single, Exterior	
1-1/2 pr.	Hinges, A8112, 4-1/2" x 4-1/2"	626
1 ea.	Lockset, F40, Grade 1	626
1 ea.	Closer, C02061 series	
1 ea.	Wall stop, L02112	626
1 ea.	Mop plate, J103	630
HW-3	Hollow Metal Doors, Single, Interior	
1-1/2 pr.	Hinges, A8112, 4-1/2" x 4-1/2"	626
1 ea.	Lockset, F84, Grade 1	626
1 ea.	Closer, C02061	
1 ea.	Wall stop, L0212	626
2 ea.	Mop plate, J103	630
HW-4	Hollow Metal Doors, Single, Interior	
1-1/2 pr.	Hinges, A8112, 4-1/2" x 4-1/2"	626
1 ea.	Lockset, F86, Grade 1	626
1 ea.	Closer, C02061	
1 ea.	Wall stop, L0212	626
1 ea.	Mop plate, J102	630
HW-5	Hollow Metal Door, Exterior	
1-1/2 pr.	Hinges, A8112, 5" x 5"	626
1 ea.	Lockset, F86, Grade 1	626
1 ea.	Closer, C02061	
1 ea.	Kickplate J102	630
1 set	Weatherseals - Head, Jamb	
1 ea.	Threshold J12190	

HW-6	Hollow Metal Door, Exterior	
2 pr.	Hinges, A5112, 4-1/2" x 4-1/2"	626
1 ea.	Lockset, F86, Grade 1	626
1 ea.	Closer, C02061	
1 ea.	Kickplate, J102	630
1 set	Weatherseals	
1 ea.	Threshold J12190	
HW-7	Hollow Metal Doors, Single, Interior	
2 pr.	Hinges, A8112, 4-1/2" x 4-1/2"	626
1 ea.	Latchset, F75, Grade 1	626
1 ea.	Closer, C02061	
1 ea.	Wall stop, L0212	626
2 ea.	Mop plate, J12190	
HW-8	Hollow Metal Doors, Single, Interior	
1-1/2 pr.	Hinges, A8112, 4-1/2" x 4-1/2"	626
1 ea.	Latchset, F75, Grade 1	626
1 ea.	Closer, C02061	
1 ea.	Wall stop, L0212	626
2 ea.	Mop plate, J103	
HW-9	Hollow Metal Door, Double, Exterior	
3 pr.	Hinges, A5112, 4-1/2" x 4-1/2"	626
2 ea.	Cremone bolts	626
2 sets	Weatherseals	
1	Threshold J12190	

-- o O o --

SECTION 13205 - CHEMICAL STORAGE TANK

PART 1 - GENERAL

1.1 REFERENCES (Not Applicable)

1.2 SUBMITTALS

The following shall be submitted in accordance with Section 01300 - Submittals:

SD-04, Drawings

Chemical Storage Tank

Submittals which graphically show relationship of various components of the work, schematic diagrams of systems, details of fabrication, layouts of particular elements, connections, and other related aspects of the work.

SD-06, Instructions

Placing Tank.

Printed copies of the manufacturer's recommendations for installation procedures of the system being placed, prior to installation. Condensed operating instructions explaining preventive maintenance procedures, methods of checking the system for normal safe operations shall be framed and posted by the tank. The framed instructions shall be posted before acceptance of the storage system.

SD-94, Warranties

Chemical Storage Tank.

Written guarantees shall be provided on the integrity of the equipment and accessories furnished.

1.3 DELIVERY, STORAGE, AND HANDLING

Materials delivered to site shall be inspected for damage, unloaded, and stored with a minimum of handling. Materials shall not be stored directly on the ground. Gasket materials shall be protected from exposure to the direct sunlight over extended periods.

PART 2 - PRODUCTS

2.1 GENERAL MATERIAL REQUIREMENTS

Materials shall be the standard products of a manufacturer regularly engaged in the manufacture of such products and shall essentially duplicate items that have been in satisfactory use for at least 2 years prior to bid opening.

2.2 CHEMICAL STORAGE TANK

Chemical storage tanks shall be constructed of compounded carbon black high-density crosslinkable polyethylene. The manufacturer shall have UL chemical compatibility listing labels for individual chemicals for which UL testing has been completed.

2.2.1 Chemical Storage Tank Characteristics and Materials

a. Tank Service: 12.5% Sodium Hypochlorite Storage
b. Size: 6500 gallon tank
c. Material: Compounded carbon black high-density crosslinkable polyethylene
d. Wall Thickness: "Extra heavy wall", based on specific gravity of chemical stored
e. Gaskets: Compatible with chemical being stored

PART 3 - EXECUTION

3.1 STORAGE TANK INSTALLATION

System shall be installed in the position indicated and in accordance with manufacturer's written instructions. All appurtenances required for a complete operating storage system shall be provided, including such items as piping, valves, and supports.

3.2 STORAGE EQUIPMENT TESTING

3.2.1 Factory Testing

Tank shall be hydrostatically tested for leaks at the factory by filling the tank with water after fittings have been installed. Testing for leaks shall be done for at least 30 minutes. No leak tolerance is allowed.

3.2.2 Field Testing

Tank shall be hydrostatically tested for leaks after being installed by the contractor. Inspection for leaks shall be for at least 30 minutes. Testing will be acceptable only in the case of no leaks.

- - o 0 o - -

SECTION 13209 - DIESEL FUEL STORAGE TANK

PART 1 GENERAL

1.1 DESCRIPTION

Provide and install one (1) 2,000 gallon capacity, above-ground, double containment, steel and concrete tank for storage of diesel fuel.

1.2 REFERENCES

The publications listed below form a part of this specification to the extent referenced. The publications are referred to in the text by basic designation only.

FEDERAL SPECIFICATIONS (FS)

FS VV-F-800 (Rev D; Am 2) Fuel Oil, Diesel

NATIONAL FIRE PROTECTION ASSOCIATION (NFPA)

NFPA 30 (1987) Flammable and Combustible Liquids

1.3 GENERAL REQUIREMENTS

1.3.1 Standard Products

Material and equipment shall be the standard products of a manufacturer regularly engaged in the manufacture of the products. Items of equipment shall essentially duplicate equipment that has been in satisfactory use at least 2 years prior to bid opening. All materials shall be resistant to the effects of diesel fuel conforming to requirements of FS VV-F-800. The completed installation shall conform to the applicable requirements of NFPA 30.

1.3.2 Nameplates

Each major item of equipment shall have the manufacturer's name, address, type or style, model or serial number, and catalog number on a plate secure to the item of equipment.

1.3.3 Verification of Dimensions

The Contractor shall become familiar with all details of the work, verifying all dimensions in the field, and shall advise the Contracting Officer of any discrepancy before performing any work.

1.4 SUBMITTALS

The following shall be submitted in accordance with Section 01300 - SUBMITTALS:

SD-17, Manufacturer's Catalog Data

Product Data

Catalog cuts, brochures, circulars, specifications and product data, and printed information in sufficient detail and scope to verify compliance with requirements of the Contract Documents.

SD-19, Operation and Maintenance Manuals

Diesel Fuel Storage Tank

Six complete copies of operating instructions for system operation and maintenance instructions listing routine maintenance procedures.

PART 2 PRODUCTS

2.1 STEEL TANK

2.1.1 Steel tank shall be manufactured in accordance with U.L. 142.

2.1.2 Steel tanks shall be rectangular in shape and have continuous welds on all sides, inside as well as outside conforming with The American Welding Society Standard for continuous weld.

2.1.3 Steel tank shall be pressure tested at 5 psi for 24 hours.

2.1.4 Steel tank shall have six inch emergency vent as required by N.F.P.A. 30.

2.1.5 Steel tank openings shall be threaded, except for rectangular detector tube.

2.1.6 Outer surface of steel tank shall be covered by 1/4-inch thick insulating spacer panels of polystyrene which melts on contact with leaking petroleum products.

2.1.7 Secondary containment shall consist of a 30 mil. non-permeable high density polyethylene liner enclosing the polystyrene spacer panels.

2.1.8 Steel tank shall be pressurized to 5 psi until concrete sets to provide expansion space between concrete and steel tank during use.

2.1.9 Steel tank shall be supported internally by a minimum of two 6-inch wide beams.

2.1.10 No steel or insulating spacer panels in unit shall come in direct contact with concrete or any other corrosive material with the exception of tank top openings which must be a minimum of 3/8-inch thick steel pipe.

2.1.11 Steel tank exterior shall be finished with a rust preventative primer.

2.2 CONCRETE ENCASEMENT

2.2.1 Steel tank and secondary containment shall be encased in homogenous layer of a minimum 5,000 psi factory poured reinforced concrete 6-inches thick with no penetrating metal elements except at the top.

2.2.2 Vault shall be of a continuous and visually verifiable monolithic (seamless) pour on top, bottom, and sides of steel tank and contain no cold joints or heat sinks (heat transfer points) on bottom and sides.

2.2.3 Vault shall have capability of physical monitoring between primary and secondary containment.

2.2.4 Vaulted tank shall be tested in accordance with U.L. standard 1709 and shown to have a two hour fire wall as mandated by the Uniform Fire Code.

2.3 STORAGE TANK

2.3.1 Unit shall have concrete exterior finished with protective epoxy coatings.

2.3.2 Unit shall have exterior warning signs on each of the four sides indicating "DIESEL", "NO SMOKING", and "FLAMMABLE".

2.3.3 Vaults shall have concrete support legs of unitized monolithic construction. Unit shall be placed on a foundation of a minimum six-inch thick reinforced concrete pad.

2.3.4 Tanks shall have seven gallon overfill system, U.L. listed, with internal reservoir and normally closed U.L. listed drain port where required.

2.3.5 Vaulted tank design shall have been in manufacturing production and commercial use for a minimum of five years.

2.3.6 Tank and concrete vault shall be finished as one unit at factory and require no assembly, construction or completion at installation site.

PART 3 EXECUTION

3.1 STORAGE TANK INSTALLATION

Install the diesel fuel storage tank in accordance with the manufacturer's instructions.

3.2 FIELD TESTS

After the tank has been set and piping has been installed, the tank shall be leak tested in accordance with the manufacturer's written test procedure. Any test failure shall require corrective action and retest.

3.3 TANK CALIBRATION

The tanks shall be furnished with calibrated charts showing the liquid contents in gallons for each 1/8-inch of tank depth. Two reproductions of the gauge chart shall be enclosed in plastic envelopes and bound in hardback binders. Two gauge sticks graduated in feet, inches, and eighths of an inch shall be provided. Gauge sticks shall be of wood and properly treated after graduating to prevent swelling or damage from the fuel.

- - o 0 o - -

SECTION 13621 - METERING DEVICES

PART 1 - GENERAL

1.1 WORK INCLUDED

1.1.1 Parshall flume, V-notch weirs, and other weirs

1.2 SUBMITTALS

The following shall be submitted in accordance with SECTION: 01300 - SUBMITTALS:

SD-01, Data

Materials and Equipment.

Manufacturer's descriptive data and technical literature and installation instructions. Provide discharge curves for each metering device supplied.

SD-15, Equipment and Performance Data

Metering devices.

Calibrated discharge curves for each metering device, framed under glass or in approved laminated plastic, shall be posted where directed. The framed discharge curves shall be posted before acceptance testing of the systems.

PART 2 - PRODUCTS

2.1 MATERIALS AND DESIGN REQUIREMENTS

2.1.1 Parshall Flume

2.1.1.1 Molded of corrosion-resistant fiberglass reinforced polyester.

2.1.1.2 2-inch flange on bottom and walls of approach and discharge ends.

2.1.1.3 Stiffening ribs and wall thickness to guarantee unit's self support. No external bracing is acceptable.

2.1.1.4 Size as indicated on Drawings.

2.1.1.5 Integral molded-in staff gauge with readings in inches. Staff gauge fastened with screws, clamps, or the like is not acceptable.

2.1.1.6 Two molded mounting channels for flow transmitter sensing element and ground strip.

2.1.2 V-Notch Weir or Other Weirs

2.1.2.1 1/4-inch thick steel plate, hot-dipped galvanized after fabrication, or

2.1.2.2 1/4-inch thick aluminum plate.

2.1.2.3 Contractor's option unless otherwise indicated on Drawings.

2.1.2.4 Size and arrangement as shown on Drawings.

PART 3 - EXECUTION

3.1 INSTALLATION

3.1.1 In accordance with the manufacturer's recommendations.

3.1.2 As shown on Drawings.

3.1.3 Install Parshall flume with internal bracing to maintain the original interior dimensions of the flume.

3.2 SCHEDULE

3.2.1 Parshall flumes as shown on Drawings.

3.2.2 Weir plates as shown on Drawings.

- - o 0 o - -

SECTION 14300 - HOISTS AND CRANES

PART 1 GENERAL

1.1 WORK INCLUDED

1.1.1 Monorail Hoists, Hoists, Trolleys, Hand-Operated Portable Hoists

1.2 QUALITY ASSURANCE

1.2.1 Erector Qualifications

1.2.1.1 Regularly engaged in hoist and crane erecting

1.2.1.2 Acceptable to manufacturer

1.2.2 Requirements of Regulatory Agencies

1.2.2.1 ANSI B30.2.0: Safety Code for Overhead and Gantry Cranes

1.2.2.2 OSHA Standards, Vol. III, Subpart N: Cranes, Derricks, Hoists, Elevators, and Conveyors

1.2.2.3 Obtain all necessary inspections and certifications

1.2.3 Reference Standards

1.2.3.1 HMI No. 100: Standard Specifications for Electric Wire Rope Hoists

1.2.3.2 MMA: Specifications for Underhung Cranes and Monorail Systems

1.2.4 Standardization: All hoists and trolleys, supplied by a single manufacturer unless otherwise specifically approved in writing by Contracting Officer.

1.3 SUBMITTALS

The following shall be submitted in accordance with Section 01300 - SUBMITTALS:

SD-01 Data

Materials and Equipment;

Manufacturer's descriptive data and technical literature, catalog cuts, and installation instructions. Spare parts data for each different item of material and equipment specified, after approval of the detail drawings and not later than 2 months prior to the date of beneficial occupancy. Data shall include a complete list of parts and supplies, with current unit prices and source of supply.

SD-04 Drawings

Hoists and Cranes;

A complete listing of equipment and materials. Drawings containing complete wiring and schematic diagrams and any other details required to demonstrate that the system has been coordinated and will properly function as a unit.

Drawings shall show proposed layout and equipment relationship to other parts of the work including clearances for maintenance and operation.

SD-06 Instructions

Hoists and Cranes;

Proposed diagrams, instructions, and other sheets, prior to posting. Approved wiring and control diagrams showing the complete layout of the entire system, including equipment and control sequence, framed under glass or in approved laminated plastic, shall be posted where directed. Condensed operating instructions explaining preventive maintenance procedures, methods of checking the system for normal safe operation, and procedures for safely starting and stopping the system shall be prepared in typed form, framed as specified above for the wiring and control diagrams, and posted beside the diagrams. The framed instructions shall be posted before acceptance testing of the systems.

SD-09 Reports

Tests;

Test reports in booklet form showing all field tests performed to adjust each component and all field tests performed to prove compliance with the specified performance criteria, upon completion and testing of the installed system. Each test report shall indicate the final position of controls.

SD-19 Operation and Maintenance Manuals

Hoists and Cranes;

Six complete sets of instructions containing the manufacturer's operating and maintenance instructions for each piece of equipment. One complete set at the time the tests procedure is submitted; remaining sets before the contract is completed. Each set shall be permanently bound and shall have a hard cover. The following identification shall be inscribed on the covers: the words "OPERATING AND MAINTENANCE INSTRUCTIONS," name and location of the building, name of the Contractor, and contract number. Flysheets shall be placed before instructions covering each subject. Instruction sheets shall be approximately 8-1/2 by 11 inches, with large sheets of drawings folded in. Instructions shall include, but not be limited to, the following:

a. System layout showing equipment and controls.

b. Approved wiring and control diagrams.

c. Operating and maintenance instructions for each piece of equipment, including lubrication instructions and troubleshooting guide.

d. Manufacturer's bulletins, cuts, and descriptive data; and parts list and recommended spare parts.

1.4 DELIVERY AND STORAGE

All equipment delivered and placed in storage shall be stored with protection from the weather, humidity and temperature variations, dirt and dust, or other contaminants.

PART 2 PRODUCTS

2.1 PERFORMANCE AND DESIGN REQUIREMENTS

2.1.1 See Schedule

2.2 MATERIALS

2.2.1 Trolley Wheels: Forged steel or cast iron with hardened tread

2.2.2 Axles: Steel

2.2.3 Gearing

2.2.3.1 General: Steel or cast iron

2.2.3.2 Pinions: Heat treated alloy steel

2.2.4 Bearings: Antifriction, oil lubricated or permanently grease-packed

2.2.5 Cable: Improved plow steel

2.2.6 Lifting Hook: Forged steel with safety latch

2.2.7 Chain: Stainless steel

2.3 FABRICATION AND MANUFACTURE

2.3.1 General

2.3.1.1 Underhung monorail hoist

2.3.1.2 Comply with MMA standards and HMI No. 100 except as specified herein

2.3.2 Trolley

2.3.2.1 Hand operated with chain unless otherwise scheduled

2.3.2.2 Geared type

2.3.2.3 Capacity: See schedule

2.3.2.4 Factory labeled per OSHA requirements

2.3.3 Hoists

2.3.3.1 Hand operated
- a. Chain, stainless steel
- b. 85 lb maximum pull
- c. Lifting chain, stainless steel

2.3.3.2 Electric operated
- a. Controls and electric as scheduled
- b. Division 16
- c. Lifting cable or link chain as scheduled
- d. Automatic load brake to hold load at any point

2.3.3.3 Lifting height: See schedule

2.3.3.4 Capacity: See schedule

2.3.3.5 Low head type unless otherwise scheduled

2.3.3.6 Factory labeled per OSHA requirements

2.3.4 Bumpers and Stops

2.3.4.1 As indicated on Drawings and as required to provide a complete, safe, ready to use system

2.3.5 Rails: Monorails are to be nominal dimension shown on Drawings unless otherwise approved by Contracting Officer; proper rail sizing is responsibility of hoist manufacturer

2.3.6 Hand-Operated Portable Hoists

2.3.6.1 Specifically designed for raising and lowering submersible pumps in wastewater treatment facilities.

2.3.6.2 Mast, boom, and winch assembly designed to fit into permanently mounted wall socket.

2.3.6.3 Hand Winch: Spur gear hand winch mounted to mast and equipped with disc brake for load control.

2.3.6.4 Maximum weight of mast, boom, and winch assembly: 75 lb.

2.3.6.5 Cable Assembly: Stainless steel with stainless steel snap hook.

2.3.6.6 Boom Rotation: Boom and mast shall rotate 360 degrees on rollers and a Nylatron bearing sleeve in the wall socket.

2.3.6.7 Corrosion Resistant Finish: Fusibond electrostatic finish and stainless steel fasteners.

2.3.6.8 Wall Socket: 326 stainless steel

PART 3 EXECUTION

3.1 ERECTION

3.1.1 Erect in accordance with manufacturer's instructions

3.1.2 Complete ready to use installation

3.2 SCHEDULE

3.2.1 Blower Building Hoist:

3.2.1.1 Trolley

a. Capacity: 1 ton
b. Plain type for hook suspension hoists
c. Number required: 2

3.2.1.2 Hoist

a. Capacity: 1 ton
b. Hand operated, geared type, hook suspended
c. Stainless steel lifting chain with mounted bucket to hold excess chain, hoist and pump chain
d. Lifting chain on hoist to provide 13 foot lift
e. Number required: 1

3.2.2 Effluent Pump Hoist

3.2.2.1 Capacity: One ton

3.2.2.2 Single speed electric hoist with inching control, 208V, 3 phase, integral starter.

3.2.2.3 Operating Speed: 15 ft/min

3.2.2.4 Hand-Operated Trolley

3.2.2.5 Stainless steel lifting chain with mounted bucket to hold excess chain.

3.2.2.6 Lifting height: 35 feet

3.2.2.7 Pushbutton controls to hang from hoist to within 4 feet of floor.

3.2.2.8 Electric cable to trolley hoist hung by festoon system.

3.2.2.9 NEMA 4X type junction box.

3.2.3 Hand Operated Portable Hoists

3.2.3.1 Capacity: 500 lb.

3.2.3.2 Lifting Height: 30 feet

3.2.3.3 Number of Hoists Required: 1

3.2.3.4 Number of Wall Sockets Required: 3

3.2.3.5 Location of Wall Sockets: At submersible pumps for two sequencing batch reactors and at submersible pump for aerobic digester.

- - o 0 o - -

SECTION 15060 - PROCESS PIPING

PART 1 GENERAL

1.1 DESCRIPTION

Pipes, materials, and appurtenances for all treatment plant, lift station, process, pumping stations, plant effluent, washwater, and similar facilities.

1.2 REFERENCES

The publications listed below form a part of this specification to the extent referenced. The publications are referred to in the text by basic designation only.

AMERICAN NATIONAL STANDARDS INSTITUTE, INC. (ANSI)

ANSI B1.20.1	(1983) Pipe Threads, General Purpose (Inch).
ANSI B16.1	(1975) Cast Iron Pipe Flanges and Flanged Fittings Class 25, 125, 250 and 800.

AMERICAN SOCIETY FOR TESTING AND MATERIALS (ASTM)

ASTM A53	(1990) Pipe, Steel, Black and Hot-Dipped, Zinc-Coated Welded and Seamless
ASTM A90	(1981) Weight of Coating on Zinc-Coated (Galvanized) Iron or Steel Articles
ASTM A120	(1980) Pipe, Steel, Black and Hot-Dipped Zinc-Coated (Galvanized) Welded and Seamless, for Ordinary Uses
ASTM A307	(1980) Carbon Steel Externally Threaded Standard Fasteners
ASTM A536	(1980) Ductile Iron Castings
ASTM A576	(1979) Steel Bars, Carbon, Hot-Rolled, Special Quality
ASTM B6	(1977) Zinc (Slab Zinc)
ASTM D395	(1978) Rubber Property - Compression Set
ASTM D412	(1980) Rubber Properties in Tension
ASTM D1330	(1978) Rubber-Sheet Gaskets
ASTM D1785	(1976) Poly (Vinyl Chloride) (PVC) Plastic Pipe, Schedules 40, 80, and 120
ASTM D2564	(1980) Solvent Cements for Poly (Vinyl Chloride) (PVC) Plastic Pipe and Fittings
ASTM D3139	(1977) Joints for Plastic Pressure Pipes Using Flexible Elastomeric Seals

AMERICAN WATER WORKS ASSOCIATION (AWWA)

AWWA C104	(1985) Cement-Mortar Lining for Ductile-Iron Pipe and Fittings for Water

AWWA C105	(1982) Polyethylene Encasement for Ductile-Iron Piping for Water and Other Liquids
AWWA C110	(1987) Ductile-Iron and Gray-Iron Fittings, 3 in. through 48 in, for Water and Other Liquids
AWWA C111	(1985) Rubber-Gasket Joints for Ductile-Iron and Gray-Iron Pressure Pipe and Fittings
AWWA C115	(1983) Flanged Ductile-Iron and Gray-Iron Pipe with Threaded Flanges
AWWA C151	(1986) Ductile-Iron Pipe, Centrifugally Cast in Metal Molds or Sand-Lined Molds, for Water or Other Liquids
AWWA C280	(1986) Steel Water Pipe 6 in. and Larger
AWWA C207	(1986) Steel Pipe Flanges for Waterworks Service - Sizes 4 in. through 144 in.
AWWA C208	(1983) Dimensions for Fabricated Steel Water Pipe Fittings
AWWA C606	(1987) Grooved and Shouldered Joints
AWWA C900	(1981) Polyvinyl Chloride (PVC) Pressure Pipe, 4 in. through 12 in., for Water
AWWA C905	(1988) Polyvinyl Chloride (PVC) Water Transmission Pipe, Nominal Diameters 14 in. through 36 in.

1.3 SUBMITTALS

The following shall be submitted in accordance with Section 01300 - SUBMITTALS:

SD-01 Data

Manufacturer's Catalog Data;

SD-09 Reports

Test Reports;

1.4 HANDLING

Pipe and accessories shall be handled so as to insure delivery in sound, undamaged condition. Particular care shall be taken not to injure the pipe coating or lining. If the coating or lining of any pipe or fitting is damaged, the repair shall be made by the Contractor at his expense in a satisfactory manner. No other pipe or material of any kind shall be placed inside a pipe or fitting after the coating has been applied. Pipe shall be carried into position and not dragged. Use of pinch bars and tongs for aligning or turning pipe will be permitted only on the bare ends of the pipe. The interior of pipe and accessories shall be thoroughly cleaned of foreign matter before being installed and shall be kept clean during installation operations. Before installation, the pipe shall be inspected for defects. Material found to be defective before or after installation shall be replaced with sound material without additional expense to the Government. Rubber gaskets that are not to be installed immediately shall be stored in a cool and dark place. Pipe and fittings shall be handled and stored in accordance with the manufacturer's recommendations.

PART 2 PRODUCTS

2.1 MATERIALS AND FABRICATION

2.1.1 Ductile Iron

2.1.1.1 Pipe: Centrifugally cast in metal or sand-lined molds, AWWA C151

2.1.1.2 Mechanical joint: AWWA C111

2.1.1.3 Push-on joint: AWWA C111

2.1.1.4 Flange joint: AWWA C115

2.1.1.5 Fittings: Cast from ductile iron, AWWA C110, full body

2.1.1.6 Joints: AWWA C111

a. Flange: ANSI B16.1, 125 lb
b. Gaskets: ASTM D1330, Grade I
c. Push-on gaskets: Neoprene or other synthetic rubber, ASTM D412 or D395

2.1.1.7 Threaded connections: ANSI B1.20.1

2.1.1.8 Mechanical Joint Restraint

a. Follower gland and restraining mechanism which imparts multiple wedging action against pipe
b. Glands: Ductile iron ASTM A 536
c. Restraining devices: Ductile iron heat treated to minimum 370 BHN
d. Working Pressure: 250 psi
e. Safety Factor: Minimum of 2:1

2.1.1.9 Flanged adaptors

a. Body: Ductile iron
b. Flanges: Ductile iron AWWA C115
c. Bolts: Steel with heavy hex nuts, ASTM A576
d. Gaskets: Lastite neoprene

2.1.1.10 Tapping saddles

a. Ductile iron with galvanized steel straps and rubber sealing gasket
b. Pressure rating: 250 psi

2.1.1.11 Polyethylene encasement

a. AWWA C105
b. Class C
c. For buried ductile iron pipe and fittings

2.1.1.12 Thickness class

a. 50 minimum unless otherwise scheduled
b. 51 minimum for 3-inch and 4-inch pipe

2.1.1.13 Outside Coating

a. Shop: Prime
b. Field: Section 09900 PAINTING, GENERAL

2.1.1.14 Inside Coating: Cement mortar lining with bituminous seal coat, AWWA C104

2.1.2 Black Steel

2.1.2.1 Pipe

a. 6 inches and larger: AWWA C200
b. 5 inches and smaller: ASTM A120 for gas service piping; ASTM A53 for all other uses

2.1.2.2 Flanges: AWWA C207

2.1.2.3 Fittings: AWWA C208

2.1.2.4 Corrosion Protection: Section 09900 PAINTING, GENERAL

2.1.3 Galvanized Steel

2.1.3.1 Pipe: ASTM A53

2.1.3.2 Fittings: Malleable iron screwed or flanged

2.1.3.3 Schedule 40, unless indicated otherwise.

2.1.3.4 Corrosion Protection

a. Hot-dip process: Inside and outside, ASTM A53, ASTM B6
b. Weight of coating: ASTM A90

2.1.4 Polyvinyl Chloride (PVC)

2.1.4.1 Pipe and fittings

a. Pipe sizes 14-inch through 36-inch: AWWA C905, Class 160
b. Pipe sizes 4-inch through 12-inch: AWWA C900, Class 150
c. Pipe sizes 3.5-inch and smaller: ASTM D1785, Schedule 40 minimum

2.1.4.2 Joints

a. Gasket bell ends: ASTM D3139, lubricant assembled
b. Solvent cement: ASTM D2564 only where specifically allowed by Drawings or Contracting Officer

2.1.5 Grooved and Shouldered Type Joints

2.1.5.1 For exposed ductile iron and black steel piping or where indicated on Drawings

2.1.5.2 AWWA C606

2.1.5.3 Internal working pressure: As specified for the pipe

2.1.5.4 Track head bolts and nuts: AWWA C606

2.1.6 Couplings

2.1.6.1 Use only where indicated on Drawings or approved by Contracting Officer

2.1.6.2 The pipe couplings shall be of a gasketed, sleeve-type, with diameter to properly fit the pipe. Each coupling shall consist of one (1) steel middle ring, two (2) steel followers, two (2) rubber-compounded wedge section gaskets and sufficient track-head steel bolts to properly compress the gaskets. Field joints shall be made with this type of coupling.

a. The middle ring and followers of the coupling shall be true circular sections free from irregularities, flat spots, or surface

defects. They shall be formed from mill sections with the follower-ring section of such design as to provide confinement of the gasket. After welding, they shall be tested by cold expanding a minimum of 1% beyond the yield point.

b. The coupling bolts shall be of the elliptic-neck, track-head design with rolled threads. The manufacturer shall supply information as to the recommended torque to which the bolts shall be tightened. All bolt holes in the followers shall be oval for greater strength.

c. The gaskets of the coupling shall be composed of a crude or synthetic rubber base compounded with other products to produce a material which will not deteriorate from age, from heat, or exposure to air under normal storage conditions. It shall also possess the quality of resilience and ability to resist cold flow of the material so that the joint will remain sealed and tight indefinitely when subjected to shock, vibration, pulsation and temperature or other adjustments of the pipe line.

2.1.7 Pipe Sleeves

2.1.7.1 Manufactured from non-metallic, non-corrosive, thermoplastic material.

2.1.7.2 Formed to have a water stop and anchor plate at least 4 inches larger than the main outside diameter and position, unless otherwise specified, in the middle of the sleeve body.

2.1.7.3 Seal shall provide electrical insulation barriers between the pipe and wall

2.1.8 Mechanical Seals

2.1.8.1 Watertight, thermoplastic sleeve seal, synthetic rubber seal composed of interlocking links joined by bolts, modular sealing element when sleeve is placed in slabs with one side against soil or as shown on Drawings.

2.1.8.2 Rubber links shall completely fill the annular space between pipe and sleeve to provide water tight seal capable of resisting a hydrostatic pressure of 20 psi.

2.1.9 Expansion Joints:

2.1.9.1 Tube: Buna-N.

2.1.9.2 Minimum pressure rating: 140 psi

2.1.9.3 Minimum temperature rating: 180°F.

2.1.9.4 Arch: Filled

2.1.9.5 Minimum motion capabilities for 2-inch through 6-inch size:

a. Axial compression: 0.22-inch
b. Axial elongation: 0.125-inch
c. Lateral deflection: 0.25-inch

2.1.9.6 Minimum motion capabilities for 8-inch through 18-inch size:

a. Axial compression: 0.34-inch
b. Axial elongation: 0.19-inch
c. Lateral deflection: 0.25-inch

2.1.10 Yard Hydrant

2.1.10.1 Iron body.

2.1.10.2 Brass plugs and washers.

2.1.10.3 Adjustable flow rate wheel lock handle.

2.1.10.4 1-inch threaded hose connection or as shown on drawings.

2.1.10.5 Non-freeze type

2.1.11 Ball Valves for Plastic Pipe Installations

2.1.11.1 True union ends.

2.1.11.2 PVC construction.

2.1.11.3 150 psi at 120°F.

2.1.11.4 T-handle operator.

2.1.11.5 "O" ring seals: Viton.

2.1.11.6 Ball seat: Teflon.

2.1.12 Ball Valves for Metal Pipe Installation

2.1.12.1 Body: Hot forged brass.

2.1.12.2 Ends: Hot forged brass.

2.1.12.3 Ball: Extremely hard C.P. brass.

2.1.12.4 Seat: Virgin P.T.F.E.

2.1.12.5 Stem: Extruded brass

2.1.12.6 Packing: Virgin P.T.F.E.

2.1.12.7 "O" rings: Viton

2.1.12.8 Glands: Extruded Brass

2.1.12.9 Hexagonal nut: Steel Dacromet, chrome-plated.

2.1.12.10 Lever handle: Dacromet rugged steel.

2.1.12.11 Pressure rating: 400 psi W.O.G. non-shock.

2.1.13 Ball Check Valve

2.1.13.1 True union ends.

2.1.13.2 PVC construction

2.1.13.3 150 psi at 120°F

2.1.13.4 Uniseat/Seal and "O" ring: Viton

2.2 ACCESSORIES

2.2.1 Supports and Anchors

2.2.1.1 Clevis Hangers: FS WW-H-171D, as appropriate or as shown on Drawings

2.2.1.2 Hanger Rods: ASTM A307, Grade R

2.2.1.3 Fabricated Supports: Galvanized steel with stainless steel hardware

2.2.1.4 Beam Clamps: FS WW-H-171D, as appropriate or as shown on Drawings

2.2.1.5 Concrete Inserts

a. Individual: FS WW-H-171D, as appropriate or as shown on Drawings
b. Continuous
   1. Channel 12 gauge, galvanized 1-5/8-inches x 1-5/8-inches
   2. Anchor lugs on 4-inch centers, 2 minimum

2.2.1.6 Wall Supports and Frames: FS WW-H-171D, as appropriate or as shown on Drawings

2.2.1.7 Floor Supports

a. 6-inches and smaller: FS WW-H-171D, Type 38
b. Larger than 6-inches: FS WW-H-171D, Type 39

2.2.1.8 Pipe Roll Supports

a. Non-Adjustable: FS WW-H-171D, Type 46
b. Adjustable: FS WW-H-171D, Type 47

PART 3 EXECUTION

3.1 INSTALLATION

3.1.1 General

3.1.1.1 Install as indicated on Drawings

3.1.1.2 Pipe cutting measurement taken at site

3.1.1.3 Clean all pipe, accessories, and appurtenances before use

3.1.2 Jointing and Assembling

3.1.2.1 Manufacturer's recommendations

3.1.2.2 Lubricants: Vegetable soap solution

3.1.2.3 Solvent cementing of PVC pipe only where scheduled.

3.1.3 Clean all lines by repeated flushings after installation

3.1.4 Pipe Sleeves

3.1.4.1 For pipes passing through concrete or masonry

3.1.4.2 Install before concrete is placed where practical

3.1.4.3 Use only where indicated on Drawings

3.1.5 Mechanical Seals

3.1.5.1 To be used with pipe sleeves and core drilled penetrations

3.1.5.2 Use only where indicated on Drawings for wall penetrations

3.1.6 Wall Pipe

3.1.6.1 Provide wall pipe with intermediate flange for pipes passing through concrete walls

3.1.6.2 Install when concrete is placed

3.1.6.3 Material, thickness, ends, and size to match connecting piping

3.1.6.4 Provide tapped holes where wall pipes with flanges are flush with concrete

3.1.6.5 Use on all penetrations unless otherwise shown on Drawings

3.1.7 Floor Penetrations

3.1.7.1 Install standard pipe gasket ring around pipe in slab or floor

3.1.7.2 Number of gaskets:

a. One required for slabs less than 15 inches thick
b. Two required for slabs 15 inches thick or thicker

3.1.7.3 Gaskets equally spaced in slabs, based on the number of gaskets required

3.1.7.4 Use on all penetrations unless otherwise shown on Drawings

3.1.8 Anchoring and Supports

3.1.8.1 Where needed or indicated on drawings

3.1.8.2 Maximum support spacing:

a. Plastic Pipe: 3-feet 6-inches
b. Metal Pipe: 10-feet 0-inches

3.1.8.3 Support pipe minimum 1-1/2-inches from walls and 3-feet below ceilings

3.1.9 Buried Pipe Anchorage

3.1.9.1 Reaction blocking, anchors, joint harness or other acceptable means of preventing pipe movement, whether indicated or not, required for:

a. Unlugged bell and spigot or all unflanged tees
b. Y branches
c. Bends deflecting 22-1/2 degrees or more
d. Plugs
e. Fittings in fills or unstable ground
f. Above grade or exposed structure

3.1.9.2 Install blocking so joints are accessible for repair

3.1.9.3 When blocking is not practical, metal harness anchorages across the joint

3.1.9.4 Concrete blocking as shown on Drawings for buried pipe unless otherwise approved by Contracting Officer.

3.2 FIELD QUALITY CONTROL

3.2.1 All pipes and fittings tested in presence and to the satisfaction of the Contracting Officer

3.2.2 Test Conditions

3.2.2.1 Air piping: 10 psi air, check with soap solution, bubble tight

3.2.2.2 Pressurized process lines: 150 psi water test, no leakage for 1 hour

3.2.2.3 Other piping: No detectable leakage under normal or simulated operating conditions.

3.2.3 Procedure

3.2.3.1 Disconnect fixture, equipment, and accessories which may be damaged by test pressure.

3.2.3.2 Plug ends as required.

3.2.3.3 Retest repaired joints, piping, and fittings.

- - o 0 o - -

SECTION 15101 - PLUG VALVES

PART 1 GENERAL

1.1 WORK INCLUDED

1.1.1 Plug Valves, Actuators, and Accessories

1.2 REFERENCES

The publications listed below form a part of this specification to the extent referenced. The publications are referred to in the text by basic designation only.

AMERICAN NATIONAL STANDARDS INSTITUTE, INC. (ANSI)

ANSI B 16.1	(1975) Cast Iron Pipe Flanges and Flanged Fittings, Class 25, 125, 250 and 800.

AMERICAN SOCIETY FOR TESTING AND MATERIALS (ASTM)

ASTM A 126	(1984) Gray Iron Castings for Valves, Flanges, and Pipe Fittings.

AMERICAN WATER WORKS ASSOCIATION (AWWA)

AWWA C 111	(1985) Rubber-Gasket Joints for Ductile-Iron and Gray-Iron Pressure Pipe and Flanges.
AWWA C 504	(1980) Rubber-Seated Butterfly Valves
AWWA C 507	(1991) Ball Valves, 6-inches Through 48-inches (150 mm Through 1200 mm).

1.3 SUBMITTALS

The following shall be submitted in accordance with Section 01300 - SUBMITTALS:

SD-17, Manufacturer's Catalog Data

Product Data;

Catalog cuts, brochures, circulars, specifications and product data, and printed information in sufficient detail and scope to verify compliance with requirements of the Contract Documents.

SD-19, Operation and Maintenance Manuals

Plug Valves;

Six complete copies of operating instructions for system operation and maintenance instructions listing routine maintenance procedures.

1.4 SERVICE CONDITION

1.4.1 Raw and partially treated sewage, sewage sludge, and Playa Lake Water.

1.5 ADDITIONAL REQUIREMENTS

1.5.1 All plug valves provided by same manufacturer

1.5.2 Manufacturer's name and pressure ratings cast on body

PART 2 PRODUCTS

2.1 DESIGN REQUIREMENTS

2.1.1 Drip-tight shut-off under following pressures in either direction

2.1.1.1 Sizes through 12-inch: 175 psi

2.1.1.2 Sizes 14-inch through 36-inch: 150 psi

2.1.1.3 Sizes 42-inch through 54-inch: 125 psi

2.1.2 Materials and Construction

2.1.2.1 Valve type: non-lubricated, eccentric

2.1.2.2 Valve body: ASTM A126 Class B semisteel and AWWA C504

2.1.2.3 Resilient plug facings: Neoprene

2.1.2.4 Flanged valves: Faced and drilled to the ANSI 125/150 lb standard conforming to ANSI B 16.1

2.1.2.5 Mechanical joint ends: AWWA C111

2.1.2.6 Screwed ends: NPT standard

2.1.2.7 Seats: Nickel or Stainless Steel Type 304, AWWA C507 Sec. 3.2.3.5. and AWWA C504 Sec 3.5.3

2.1.2.8 Sleeve type bearings in upper and lower journals: Replaceable

2.1.2.9 Bearing material: Stainless steel or Teflon with Non-Metallic Backing, AWWA C507 Sec. 3.2.4, AWWA C504, Sec. 3.6

2.1.2.10 Valve shaft seals: AWWA C507 Sec. 3.2.6, AWWA C504 Sec. 3.7

2.1.2.11 Port areas:
a. Valves through 24-inch: At least 80% of full pipe area
b. Sizes 30-inch and larger: At least 100% of full pipe area

2.1.2.12 Exposed nuts, bolts, springs, washers: Zinc plated

2.1.3 Valve operators

2.1.3.1 Buried
a. 2-inch direct opening nut for 6-inch and smaller
b. Enclosed waterproof gear operator with 2-inch nut for 8-inch and larger
c. Stem extension

2.1.3.2 Exposed
a. Within normal reach of personnel
   (1) Wrench operated for 6-inch and smaller
   (2) Enclosed gear operator with handwheel for 8-inch and larger
b. Overhead
   (1) Chain operator for 6-inch and smaller with either gear operator or other arrangement for easy leveraged operation
   (2) Chain operator for 8-inch and larger with gear operator
c. Unless otherwise indicated on Drawings

2.1.3.3 Floor stands
a. Located directly over valve
b. Gear reducer in head, enclosed
c. Hand wheel operator

2.2 PROTECTION COATING

2.2.1 Corrosion Protection
2.2.1.1 Manufacturer's standard shop coating
2.2.1.2 Field painting of exposed valves: Section 09900 PAINTING, GENERAL

2.3 MAINTENANCE MATERIALS

2.3.1 Spare Parts: One spare valve with operator of each size used

2.4 ASSEMBLY REQUIREMENTS FOR BURIED VALVE INSTALLATIONS

2.4.1 Valve manufacturer required to supply complete valve assembly including valve and valve accessories. Valve box and valve position indicator for complete installation. Refer to Section 15108 VALVE BOXES for valve box and position indicator requirements.

PART 3 EXECUTION

3.1 INSTALLATION

3.1.1 Manufacturer's recommendations

3.1.2 In horizontal pipelines: Plug in horizontal position whenever possible, plug above flow

3.1.3 Seat to be located on downstream side of flow except at pumps. At pumps, seat to be located on pump side.

- - o O o - -

SECTION 15102 - AIR SERVICE VALVES

PART 1 GENERAL

1.1 WORK INCLUDED

1.1.1 Butterfly Valves

1.1.1.1 Rubber seated

1.1.1.2 Metal seated

1.1.2 Check Valves

1.1.3 Manual Actuators

1.2 REFERENCES

The publications listed below form a part of this specification to the extent referenced. The publications are referred to in the text by basic designation only.

AMERICAN NATIONAL STANDARDS INSTITUTE, INC. (ANSI)

ANSI B 16.1	(1975 Cast Iron Pipe Flanges and Flanged Fittings, Class 25, 125, 250 and 800

AMERICAN WATER WORKS ASSOCIATION (AWWA)

AWWA C 504	(1980) Rubber-Seated Butterfly Valves

1.3 SUBMITTALS

The following shall be submitted in accordance with Section 01300 - SUBMITTALS:

SD-17, Manufacturer's Catalog Data

Product Data

Catalog cuts, brochures, circulars, specifications and product data, and printed information in sufficient detail and scope to verify compliance with requirements of the Contract Documents.

SD-19, Operation and Maintenance Manuals

Air Service Valves

Six complete copies of operating instructions for system operation and maintenance instructions listing routine maintenance procedures.

1.4 SERVICE CONDITION

1.4.1 Low pressure air at temperatures up to 275°F

1.5 ADDITIONAL REQUIREMENTS

1.5.1 All air service butterfly valves and actuators provided by same manufacturer

1.5.2 Air service check valves shall be approved by, or provided by , centrifugal blower manufacturer.

PART 2 PRODUCTS

2.1 DESIGN REQUIREMENTS AND MATERIALS

2.1.1 Manufacturer's name or initials: Cast on valve body

2.1.2 Resilient-seated butterfly valves

2.1.2.1 Rated maximum differential pressure: Class 150B, AWWA C504

2.1.2.2 Temperature range of operation: 0 to 250°F

2.1.2.3 Bubble tight shut-off at 150 psi diff. pressure

2.1.2.4 Body: Cast iron or ductile iron

2.1.2.5 Disc: Bronze or ductile iron

2.1.2.6 Stem: 304 Stainless Steel

2.1.2.7 Seat: EPDM

2.1.2.8 Bushings: TFE

2.1.2.9 Shaft seal: "V" type TFE

2.1.2.10 Drilling: 125-150 lb conforming to ANSI B 16.1

2.1.2.11 Flanged for dead end service

2.1.3 Metal Seated Valves

2.1.3.1 Rated max. differential pressure at 68°F: 20 psi (closed)

2.1.3.2 Maximum temperature of operation: 400°F

2.1.3.3 Maximum temperature of continuous service: 275°F

2.1.3.4 Maximum allowable leakage

2.1.3.5 Body: Meehanite iron or ductile iron

2.1.3.6 Disc: Ductile iron

2.1.3.7 Stem: 416 Stainless Steel

2.1.3.8 Bushing: Bronze, outboard

2.1.3.9 Packing: Teflon-asbestos for high temperature

2.1.3.10 Packing follower: Meehanite iron

2.1.3.11 Flanged for dead end service: 125-150 lb conforming to ANSI B 16.1

2.1.3.12 Maximum air leakage 2% at 8 psi

2.1.4 Check Valves

2.1.4.1 Type: Center streamlined hinge post with flexible sealing member sealing against the bore of the valve body at an angle of 45°

2.1.4.2 Stainless steel body and internal fittings with silicone flexible sealing member

2.1.4.3 Suitable for air service at 275°F

2.1.4.4 125-150 lb. flanged drilling conforming to ANSI B 16.1

2.1.4.5 Special low headloss design

2.1.4.6 Specifically designed for vertical or horizontal positioning as indicated on Drawings.

2.2 ACTUATORS

2.2.1 Manually operated

2.2.1.1 Latch-lock type for on-off control and throttling service

2.2.1.2 Provided with 10° increment throttle plate

2.2.1.3 Balance stop on closing side of handle

2.2.1.4 Handle and dial plate: Rugged ductile iron castings

PART 3 EXECUTION

3.1 INSTALLATION

3.1.1 Manufacturer's recommendations

3.2 SCHEDULE

3.2.1 All butterfly air valves: Resilient seated

- - o O o - -

SECTION 15108 - VALVE BOXES

PART 1 GENERAL

1.1 WORK INCLUDED

1.1.1 Boxes for all buried, manually operated valves.

1.1.2 Box covers of markers.

1.2 SUBMITTALS

The following shall be submitted in accordance with Section 01300 - SUBMITTALS:

SD-17, Manufacturer's Catalog Data

Product Data;

Catalog cuts, brochures, circulars, specifications and product data, and printed information in sufficient detail and scope to verify compliance with requirements of the Contract Documents.

PART 2 PRODUCTS

2.1 MATERIALS AND CONSTRUCTION

2.1.1 Cast iron, adjustable extension type, traffic type

2.1.2 Minimum thickness of metal at any point: 3/16-inch

2.1.3 Removable cast iron cover

2.1.4 For valves on washwater and irrigation system only: Class 200 PVC pipe

2.1.5 All valve boxes for valves scheduled to be equipped with valve position indicators shall be designed for integral installation of the position indicator.

2.1.6 Valve Position Indicators for Buried Gear-Operated Valves

2.1.6.1 All non-metallic gearing in a hermetically sealed unit.

2.1.6.2 Synchronized with the valve to match the valve's required number of turns from open to close.

2.1.6.3 Furnished with cast iron adaptor where required to facilitate installation within the valve box body.

2.1.6.4 Indicator and adaptor specifically designed to allow removal of the indicator without requiring removal of the valve box adaptor.

2.1.6.5 Designs which require removal of the valve box adaptor casting in order to remove the position indicator are specifically excluded by this specification.

2.1.7 Valve Position Indicator for buried direct-drive valves

2.1.7.1 Synchronized with the valve to match the valve's quarter turn travel from open to closed.

2.1.7.2 Furnished with cast iron adaptor (riser) to facilitate installation within the valve box body.

2.1.7.3 Indicator and adaptor specifically designed to allow removal of the indicator without requiring removal of the valve box adaptor.

2.1.7.4 Designs which require removal of the valve box adaptor casting in order to remove the position indicator are not acceptable.

2.2 PROTECTION COATING

2.2.1 Cast iron boxes: Factory painted inside and out with manufacturer's recommended asphalt paint

PART 3 EXECUTION

3.1 INSTALLATION

3.1.1 As indicated on Drawings

3.1.2 With concrete collar

3.1.3 Shall not bear on pipe or valve

- - o O o - -

SECTION 15109 - FABRICATED SLIDE GATES

PART 1 GENERAL

1.1 WORK INCLUDED

1.1.1 Fabricated slide and weir gates, embedded or surface mounted frames, rising stems, manual operating devices, accessories and appurtenances

1.2 REFERENCES

The publications listed below form a part of this specification to the extent referenced. The publications are referred to in the text by basic designation only.

AMERICAN SOCIETY FOR TESTING AND MATERIALS (ASTM)

ASTM B 584	(1979) Copper Alloy Sand Castings for General Applications

1.3 SUBMITTALS

The following shall be submitted in accordance with Section 01300 - SUBMITTALS:

SD-17, Manufacturer's Catalog Data

Product Data;

Catalog cuts, brochures, circulars, specifications and product data, and printed information in sufficient detail and scope to verify compliance with requirements of the Contract Documents.

SD-19, Operation and Maintenance Manuals

Fabricated Slide Gates;

Six complete copies of operating instructions for system operation and maintenance instructions listing routine maintenance procedures.

1.4 SERVICE CONDITION

1.4.1 Raw and Partially Treated Sewage

1.5 ADDITIONAL REQUIREMENTS

1.5.1 All fabricated slide gates provided by same manufacturer.

PART 2 MATERIALS

2.1 DESIGN REQUIREMENTS AND CONSTRUCTION MATERIALS

2.1.1 Material

2.1.1.1 Gate and frame: Aluminum, 0.25 inch minimum thickness

2.1.1.2 Stem: Type 303 or Type 304 stainless steel

2.1.2 Gate Frame: Integral unit of structural and/or extruded shapes assembled by welding to form waterway opening

2.1.3 Gate Guides: Extruded shapes to incorporate guide grooves for the slide and flat or spigot back part of frame, guide extensions designed with rigidity as columns to take thrust developed during gate operation at maximum head

2.1.4 Slide: Plate reinforced with structural shapes attached by welding, reinforced to limit deflection under full head to not more than 1/360 of span, stem connection attached by welding and designed to take full thrust

2.1.5 Flush Bottom Closure: Specially molded resilient seal with 0.75 inch minimum width exposed face securely mounted on gate slide or securely attached to frame invert, seal to extend into guide grooves and make contact with back side of groove to seal bottom corners

2.1.6 Water tight seal in closed position

2.1.7 Hardware and Anchors: Stainless steel furnished by gate manufacturer

2.1.8 Lifting Mechanism
- a. Floor stand - cast iron or fabricated steel
- b. Handwheel operator, no gear reduction
- c. Lift nut - bronze, Bronze, ASTM B584 (CA872)
- d. Ball or roller bearings provided above and below flange on lift nut to take gate opening and closing thrust with a force of 100 ft-lbs on handwheel
- e. Bearings enclosed in a housing, seals provided to prevent leakage of lubricant. Fittings provided for periodic lubrication
- f. Maximum 50 ft-lbs required for lifting gate after unseating, maximum 25 lbs force on handwheel
- g. Direction of opening indicated by cast letters and symbols on handwheel
- h. Stem covers of butyrate plastic, over stem, mounted in a housing or adaptor plate. Easily field removable.
- i. Crank operators where scheduled, as applicable, same requirements as given for handwheel operators, enclosed gears

2.1.9 Rising Stems: Supplied with a transparent butyrate plastic stem cover with graduated scale in inch increments

2.1.10 Gate Types

2.1.10.1 Frame embedded: Self-contained, rising stem, flush bottom spigot back for embedding in concrete, for reference Rodney Hunt Series 721

2.1.10.2 Frame surface mounted: Self-contained, rising stem, flush bottom, flat back for attaching to the front face of concrete, for reference Rodney Hunt Series 761

2.1.10.3 Weir type: Self-contained, downward opening weir type, "J" seals along sides and across bottom, for reference Rodney Hunt Series 761-W

2.1.11 Design Head: 10 ft minimum water head to bottom of gate unless otherwise scheduled

2.2 FACTORY ASSEMBLY

2.2.1 Gates to be completely assembled prior to shipment to ensure proper fit and adjustment of all parts

2.3 PROTECTION COATING

2.3.1 Frame: Field coat sections in contact with concrete per Section 09900 PAINTING, GENERAL

2.3.2 Operator

2.3.2.1 Shop: Manufacturer's standard

2.3.2.2 Field: Section 09900 PAINTING, GENERAL

PART 3 EXECUTION

3.1 INSTALLATION

3.1.1 Per manufacturer's instructions, as indicated on Drawings, plumb, level, watertight, ready for use

3.2 SCHEDULE

3.2.1 Sludge Drying Beds

3.2.1.1 Number: 10

3.2.1.2 Size: 18-inches wide x 18-inches high

3.2.1.3 Type: Downward opening weir gate

- - o 0 o - -

SECTION 15110 - BALL CHECK VALVES

PART 1 GENERAL

1.1 WORK INCLUDED

1.1.1 Provision and installation of all ball check valves shown on Drawings

1.2 REFERENCES

The publications listed below form a part of this specification to the extent referenced. The publications are referred to in the text by basic designation only.

AMERICAN NATIONAL STANDARDS INSTITUTE, INC. (ANSI)

ANSI B 16.1	(1975) Cast Iron Pipe Flanges and Flanged Fittings, Class 25, 125, 250 and 800.

AMERICAN SOCIETY FOR TESTING AND MATERIALS (ASTM)

ASTM B 159	(1977) Automotive Gray Iron Castings

1.3 SUBMITTALS

The following shall be submitted in accordance with Section 01300 - SUBMITTALS:

SD-17, Manufacturer's Catalog Data

Product Data;

Catalog cuts, brochures, circulars, specifications and product data, and printed information in sufficient detail and scope to verify compliance with requirements of the Contract Documents.

SD-19, Operation and Maintenance Manuals

Ball Check Valves;

Six complete copies of operating instructions for system operation and maintenance instructions listing routine maintenance procedures.

1.4 SERVICE CONDITIONS

1.4.1 Raw Sewage, Sludge, Scum, Treated Effluent, and Playa Lake Water.

1.5 ADDITIONAL REQUIREMENTS

1.5.1 All ball check valves for the service conditions indicated above provided by same manufacturer.

PART 2 PRODUCTS

2.1 DESCRIPTION

Ball check valves consisting of body, cover, and check ball; with check ball being the only moving part.

2.2 DESIGN REQUIREMENTS

2.2.1 Valves designed to work under maximum conditions of:

2.2.1.1 Pressure: 145 psig

2.2.1.2 Temperature: 176°F

2.3 VALVE CONSTRUCTION AND MATERIALS

2.3.1 Body and Cover

2.3.1.1 Cast iron ASTM A159-72 Class 35

2.3.1.2 Flange drilling: ANSI B16.1 Class 125 flat faced

2.3.1.3 Removable cover for access to ball

2.3.2 Ball

2.3.2.1 Hollow steel with vulcanized nitril rubber

2.3.2.2 Specific gravity: 1.8 (sinking ball type)

2.4 PROTECTION COATING

2.4.1 Shop: Manufacturer's standard

2.4.2 Field: Section 09900 PAINTING, GENERAL

PART 3 EXECUTION

3.1 INSTALLATION

3.1.1 Install valves where indicated by drawings following manufacturer's recommended procedures

- - o O o - -

SECTION 15120 - SLOTTED PIPE SKIMMER

PART 1 - GENERAL

1.1 DESCRIPTION

1.1.1 Scope: Furnish and install one (1) slotted pipe skimmer for the chlorine contact chamber.

1.1.2 Type: The skimmer shall consist of a slotted pipe trough that can be rotated within mountings to adjust the elevation of the skimming weir.

1.2 REFERENCES

The publications listed below form a part of this specification to the extent referenced. The publications are referenced in the text by basic designation only.

AMERICAN SOCIETY FOR TESTING AND MATERIALS (ASTM)

ASTM A 36 (1977a) Structural Steel

1.3 SUBMITTALS

The following shall be submitted in accordance with Section 01300 - SUBMITTALS:

SD-04 Drawings

Slotted Pipe Skimmer.

Certified dimension prints detailing all required concrete block-outs, anchor bolt locations, and pipe connections.

SD-06 Instructions

Slotted Pipe Skimmer.

Manufacturer's recommended procedures for job site storage and handling of equipment.

SD-19 Operation and Maintenance Manuals

Slotted Pipe Skimmer.

Prior to delivery of the equipment and updated as required during installation of the equipment, the manufacturer shall furnish six (6) copies of complete and detailed installation, operation and maintenance manuals which shall include the following information as a minimum requirement: Assembly, installation and adjustment instructions; Lubrication and maintenance instructions; Complete descriptive literature of all materials and components furnished; Erection drawings with equipment mark numbers.

1.4 QUALITY ASSURANCE

1.4.1 Manufacturer

Slotted pipe skimmers and all accessories shall be furnished by a single manufacturer who is fully experienced and qualified in the design and manufacture of such equipment for the conditions of service specifically scheduled in this section and who has a least ten (10) successfully operating installations in the United States.

1.4.2 Coordination

The Contractor shall coordinate the installation of the slotted pipe skimmer with the oil separator equipment as shown on the Drawings.

PART 2 - PRODUCTS

2.1 MATERIALS

2.1.1 Steel Fabrication : ASTM A 36

2.1.2 Pipe: Type 304 Stainless Steel (1/4-inch minimum wall thickness)

2.1.3 Submerged Bearing: Water lubricated, Ryertex lined

2.1.4 Bearing Housing: Nickel plated cast iron

2.1.5 Fasteners and Anchorage: Type 304 Stainless Steel

2.1.6 Protective Coatings: All fabricated steel materials shall be hot dipped galvanized after fabrication.

2.2 EQUIPMENT

2.2.1 General: The skimmer shall consist of an 8-inch standard weight stainless steel pipe that has been slotted to form a skimming weir, and is mounted in bearing supports. The pipe skimmer shall be rotated by a handwheel operator. Maximum span between bearings shall be 8-feet 0-inches. Diameter of discharge pipe shall be 4-inches.

2.2.2 Pipe Skimmer: The pipe skimmer will be fabricated with a drop box discharge connection, which will connect to a 4-inch pipe. The opposite end will have a flange adaptable to mounting to wall plates by use of a pillow block bearing. Each skimmer shall be provided with an accurately cut open slot in the top of the pipe in order to receive the skimmings. The edges of the slot shall form a 60° angle measured from the centerline of each skimmer. The edges of the slot shall be parallel to the axis of the pipe. At regular intervals of not more than 4-feet 0-inches, 2-inch wide bands of the full pipe periphery shall be left to act as stiffeners. Seal skimmer at drop box with a clamping flange and teflon seals.

2.2.3 Intermediate Bearing Supports: The bearing housings will be fabricated from steel plate and shapes. Each housing will contain four roller bearings, two top and bottom. Housing assembly will be attached to steel knee brace supports mounted to tank walls.

2.2.4 End Bearing: The blind end of the rotating pipe shall be supported by a split pillow block bearing having a Ryertex liner and nickel plated housing. The pillow block bearing shall be supported by a heavy galvanized angle bracket. Bearing assembly shall seal outside water away from skimmed oil.

2.2.5 Operator: Rotation of the skimmer will be accomplished by means of a "C" type combination stainless steel chain with bronze pins, attached to a clip on the underside of the pipe. The chain will go around a gray iron chain sprocket mounted on a single reduction enclosed worm gear with a 20:1 ratio. The worm gear is to be mounted on a combination operator stand and mounting bracket. The operation of the worm gear will be accomplished by a 1-inch diameter shaft coupled to the input shaft of the gear on one end and a 15-inch diameter cast iron handwheel at the

other end. Rotation of the handwheel shall turn the pipe approximately 160° minimum or 80° each way from top center.

PART 3 - EXECUTION

3.1 INSTALLATION

3.1.1 Manufacturer's Service Representative: The slotted pipe skimmer(s) shall be furnished complete by the Manufacturer and assembled, erected, and lubricated by the Contractor as directed by the manufacturer in his working drawings and written instructions. The installation, alignment, and testing shall be checked and approved by a factory representative before acceptance.

3.1.1.1 The Contractor shall include in his bid the services of a factory trained representative for a period of one (1) day and one (1) trip. The manufacturer's representative shall inspect the completed installation, and assist the Contractor in aligning, starting up and testing. The representative shall also instruct plant personnel in the operation and maintenance of equipment.

3.1.1.2 Prior to final approval, the manufacturer shall submit a letter certifying that the installation meets all requirements of the manufacturer.

3.1.2 Anchorage: The equipment manufacturer shall furnish all required anchor bolts with leveling nuts, washers, and tie-down nuts. The anchorage shall be placed by the Contractor in exact accordance with the manufacturer's certified dimension prints and as directed by the manufacturer. The Contractor shall furnish all templates needed to accurately set the anchor bolts to the dimensions and projections specified. All anchorage shall be stainless steel.

3.2 TESTING

3.2.1 The manufacturer shall demonstrate to the Government that all mechanical equipment functions as intended.

- - o O o - -

SECTION 15175 - PRESSURE TANK

PART 1 GENERAL

1.1 DESCRIPTION

Provide and install bladder-type hydropneumatic pressure tanks in the Blower Building.

1.2 SUBMITTALS

The following shall be submitted in accordance with Section 01300 - SUBMITTALS:

SD-17, Manufacturer's Catalog Data

Product Data;

Catalog cuts, brochures, circulars, specifications and product data, and printed information in sufficient detail and scope to verify compliance with requirements of the Contract Documents.

SD-19, Operation and Maintenance Manuals

Pressure Tanks,

Six complete copies of operating instruction for system operation and maintenance instructions listing routine maintenance procedures.

PART 2 PRODUCTS

2.1 PRESSURE TANK

2.1.1 Tank Exterior: Deep-drawn steel domes

2.1.2 Welding process shall eliminate interior rough spots and sharp edges

2.1.3 Exterior Finish: Factory-applied enamel

2.1.4 Water Reservoir: 100 percent non-metallic; heavy-duty butyl

2.1.5 Prolypropylene liner and acceptance fitting shall provide rigid water reservoir that is 100 percent corrosion resistant in accordance with National Sanitation Foundation (NSF) Standard 14.

2.1.6 Mechanical O-ring seals to bond diaphragm and liner to shell groove.

2.1.7 Acceptance Fitting: Copper-lined and silver brazed for watertight seal.

2.1.8 Air Valve: Brazed (not mechanically threaded) with a tamper-proof warning label.

2.1.9 Factory precharged to 45 psi.

PART 3 EXECUTION

3.1 INSTALLATION

3.1.1 Per Manufacturer's recommendations

3.2 SCHEDULE

3.2.1 Washwater System Pressure Tank

3.2.1.1 Number: 1

3.2.1.2 Effective System Protection Volume: 220 gallons

3.2.1.3 Total Tank Volume: 528 gallons

3.2.1.4 System Connection: 3-inch FPT

3.2.2 Effluent Pumping System Pressure Tank

3.2.2.1 Number: 1

3.2.2.2 Total Tank Volume: 120 gallons

3.2.2.3 System Connection: 1-1/2 inch FPT

- - o 0 o - -

SECTION 15250

THERMAL INSULATION FOR MECHANICAL SYSTEMS

PART 1 GENERAL

1.1 REFERENCES

The publications listed below form a part of this specification to the extent referenced. The publications are referred to in the text by basic designation only.

AMERICAN SOCIETY FOR TESTING AND MATERIALS (ASTM)

ASTM A 167	(1993) Stainless and Heat-Resisting Chromium-Nickel Steel Plate, Sheet, and Strip
ASTM B 209	(1992a) Aluminum and Aluminum-Alloy Sheet and Plate
ASTM C 449	(1988) Mineral Fiber Hydraulic-Setting Thermal Insulating and Finishing Cement
ASTM C 534	(1988) Preformed Flexible Elastomeric Cellular Thermal Insulation in Sheet and Tubular Form
ASTM C 547	(1977) Mineral Fiber Preformed Pipe Insulation
ASTM C 552	(1991) Cellular Glass Thermal Insulation
ASTM C 553	(1992) Mineral Fiber Blanket Thermal Insulation for Commercial and Industrial Applications
ASTM C 612	(1993) Mineral Fiber Block and Board Thermal Insulation
ASTM C 795	(1992) Thermal Insulation for Use in Contact With Austenitic Stainless Steel
ASTM C 916	(1990) Adhesive for Duct Thermal Insulation
ASTM C 920	(1987) Elastomeric Joint Sealants
ASTM C 921	(1989) Determining the Properties of Jacketing Materials for Thermal Insulation
ASTM E 84	(1991a) Surface Burning Characteristics of Building Materials

FEDERAL SPECIFICATIONS (FS)

FS L-P-535	(Rev E; Notice 2) Plastic Sheet (Sheeting): Plastic Strip: Poly(Vinyl Chloride) and Poly (Vinyl Chloride-Vinyl Acetate), Rigid
FS HH-B-100B	(1973) Barrier Material Vapor for Pipe, Duct, and Equipment Thermal Insulation

MANUFACTURERS STANDARDIZATION SOCIETY OF THE VALVE AND FITTINGS INDUSTRY (MSS)

MSS SP-69	(1991) Pipe Hangers and Supports - Selection and Application

MIDWEST INSULATION CONTRACTORS ASSOCIATION (MICA)

MICA-01	(1993) National Commercial & Industrial Insulation Standards

1.2 SYSTEM DESCRIPTION

Field-applied insulation and accessories on mechanical systems shall be as specified herein; factory-applied insulation is specified under the piping, duct or equipment to be insulated. Field applied insulation materials required for use on Government-furnished items as listed in the SPECIAL CLAUSES shall be furnished and installed by the Contractor.

1.3 GENERAL QUALITY CONTROL

1.3.1 Standard Products

Materials shall be the standard products of manufacturers regularly engaged in the manufacture of such products and shall essentially duplicate items that have been in satisfactory use for at least 2 years prior to bid opening.

1.3.2 Installer's Qualifications

Qualified installers shall have successfully completed three or more similar type jobs within the last 5 years.

1.3.3 Surface Burning Characteristics

Unless otherwise specified, insulation not covered with a jacket shall have a flame spread rating no higher than 75 and a smoke developed rating no higher than 150. The outside surface of insulation systems which are located in air plenums, in ceiling spaces, and in attic spaces shall have a flame spread rating no higher than 25 and a smoke developed rating no higher than 50. Insulation materials located exterior to the building perimeter are not required to be fire-rated. Flame spread and smoke developed ratings shall be determined by ASTM E 84. Insulation shall be tested in the same density and installed thickness as the material that shall be used in the actual construction. Jackets shall comply with the flame spread and smoke developed ratings required by ASTM C 921.

1.3.4 Identification of Materials

Packages or standard containers of insulation, jacket material, cements, adhesives, and coatings delivered for use, and samples required for approval shall have manufacturer's stamp or label attached giving the name of the manufacturer and brand, and a description of the material.

1.4 SUBMITTALS

The following shall be submitted in accordance with Section 01300 SUBMITTAL DESCRIPTIONS:

SD-01 Data

Thermal Insulation Materials.

A complete list of materials, including manufacturer's descriptive and technical literature, performance data, catalog cuts, and installation instructions. Materials furnished under this section of the specification shall be submitted at one time. A schedule indicating the product number, k-value, thickness and furnished accessories for each mechanical system requiring insulation shall be included.

SD-14 Samples

Thermal Insulation Materials.

A display of insulated sections as specified in this section, after approval of materials and prior to insulating any piping or ductwork. Each material used shall be identified, by indicating on an attached sheet the specification requirement for the material and the material by each manufacturer intended to meet the requirement. Display sample sections will be inspected at the jobsite by the Contracting Officer. Approved

display sample sections shall remain on display at the jobsite during the construction period. Upon completion of construction, the display sample sections will be returned to the Contractor.

Pipe Insulation Display Sections: Display sample sections shall include as a minimum an elbow or tee, a valve, dielectric unions and flanges, a hanger with protection shield and insulation insert, or dowel as required, at support point, method of fastening and sealing insulation at longitudinal lap, circumferential lap, butt joints at fittings and on pipe runs, and terminating points for each type of pipe insulation used on the job, and for hot pipelines and cold pipelines, both interior and exterior, even when the same type of insulation is used for these services.

Duct Insulation Display Sections: Display sample sections for rigid and flexible duct insulation used on the job. A display section for duct insulation exposed to weather.

1.5 STORAGE

Materials shall be delivered in the manufacturer's unopened containers. Materials delivered and placed in storage shall be provided with protection from weather, humidity, dirt, dust and other contaminants by the Contractor. Insulation material and supplies that become dirty, dusty, wet, or otherwise contaminated may be rejected by the Contracting Officer.

PART 2 PRODUCTS

2.1 GENERAL MATERIALS

Materials shall be compatible and shall not contribute to corrosion, soften, or otherwise attack surfaces to which applied in either the wet or dry state. Materials to be used on stainless steel surfaces shall meet ASTM C 795 requirements. Materials shall be asbestos free and conform to the following:

2.1.1 Adhesives

ASTM C916, Type 1.

2.1.2 Caulking

ASTM C 920, Type S, Grade NS, Class 25, Use A.

2.1.3 Corner Angles

Nominal 0.4064 mm (0.016 inch) aluminum 25.4 by 25.4 mm (1 by 1 inch) with factory applied kraft backing. Aluminum shall be ASTM B 209, Alloy 3003, 3105, or 5005.

2.1.4 Finishing Cement

Mineral fiber hydraulic-setting thermal insulating cement ASTM C 449.

2.1.5 Staples

Outward clinching type ASTM A 167, Type 304 or 316 stainless steel.

2.1.6 Jackets

ASTM C 921, Type I, moisture vapor transmission maximum 0.02 perms, puncture resistance minimum 50 Beach units on all surfaces except concealed ductwork, where a minimum puncture resistance of 25 Beach units is allowable, tensile strength minimum 6.1 N/mm (35 pounds/inch) width; Type II, puncture resistance minimum 25 Beach units, tensile strength minimum 3.5 N/mm (20 pound/inch) width. Aluminum jackets shall be corrugated, embossed or smooth sheet, 0.4064 mm (0.016 inch) nominal thickness; ASTM B 209, Temper H14, Temper H16, Alloy 3003, 5005, or 3105 with factory applied moisture barrier. Corrugated aluminum jacket shall not be used outdoors. Aluminum jacket securing bands shall be Type 304 stainless steel, 0.3962 mm

(0.015 inch) thick, 12.7 mm (1/2 inch) wide for pipe under 300 mm (12 inch) diameter and 19.1 mm (3/4 inch) wide for pipe over 300 mm (12 inch) diameter. Aluminum jacket circumferential seam bands shall be 50.8 by 0.4064 mm (2 by 0.016 inch) aluminum matching jacket material. The jacket may, at the option of the Contractor, be provided with a factory fabricated Pittsburg or "Z" type longitudinal joint. When the "Z" joint is used, the bands at the circumferential joints shall be designed by the manufacturer to seal the joints and hold the jacket in place. Polyvinyl chloride (PVC) jacket and fitting covers shall be FS L-P-535, Composition A, Type II, with minimum thickness 0.7620 mm (0.030 inch). Insulation under PVC jacket shall meet jacket manufacturer's written recommendations.

2.1.7 Vapor Barrier Material

FS HH-B-100B, Type I.

2.2 PIPE INSULATION MATERIALS

Pipe insulation materials shall be as follows:

2.2.1 Aboveground Cold Pipeline

Insulation for minus 34 degrees C to plus 16 degrees C (minus 30 degrees to Plus 60 degrees F) shall be as follows:

2.2.1.1 Mineral Fiber

ASTM C 547, Class 1 for use up to 232 degrees C (450 degrees F) and Class 2 for use up to 343 degrees C (650 degrees F).

2.2.1.2 Cellular Glass

ASTM C 552, Type II, and Type III.

2.2.1.3 Flexible Cellular Insulation

ASTM C 534, Type I.

2.2.2 Aboveground Hot Pipeline

For aboveground hot pipeline (above 16 degrees C) (above 60 degrees F) insulation the following requirements shall be met.

2.2.2.1 Mineral Fiber

ASTM C 547, Class 1 or Class 2 as required for the operating temperature range.

2.2.2.2 Cellular Glass

ASTM C 552, Type II and Type III.

2.2.2.3 Flexible Cellular Insulation

ASTM C 534, Type I to 93 degrees C (200 degrees F) service.

2.3 DUCT INSULATION MATERIALS

Duct insulation materials shall be as follows:

2.3.1 Rigid Mineral Fiber

ASTM C 612, Class 1.

2.3.2 Flexible Mineral Fiber

ASTM C 553, Type I, Class B-2.

2.3.3 Cellular Glass

ASTM C 552, Type I.

PART 3 EXECUTION

3.1 APPLICATION - GENERAL

3.1.1 Installation

Except as otherwise specified, material shall be installed in accordance with the manufacturer's written instructions. Insulation materials shall not be applied until tests specified in other sections of this specification are completed. Material such as rust, scale, dirt and moisture shall be removed from surfaces to receive insulation. Insulation shall be kept clean and dry. Insulation shall not be removed from its shipping containers until the day it is ready to use and shall be returned to like containers or equally protected from dirt and moisture at the end of each workday. Insulation that becomes dirty shall be thoroughly cleaned prior to use. If insulation becomes wet or if aforementioned cleaning does not restore the surfaces to like new condition, the insulation may be rejected, and if rejected, shall be immediately removed from the jobsite. Joints shall be staggered on multilayer insulation. Mineral fiber thermal insulating cement shall be mixed with demineralized water when used on stainless steel surfaces. Insulation, jacketing and accessories shall be installed in accordance with MICA-01 standard plates except where modified herein or on the drawings.

3.1.2 Firestopping

Where pipes and ducts pass through fire walls, fire partitions, above grade floors, and fire rated chase walls, the penetration shall be sealed with firestopping materials.

3.1.3 Painting and Finishing

Painting shall be as specified in Section 09900 PAINTING, GENERAL.

3.1.4 Flexible Cellular Insulation

Flexible cellular insulation shall be installed with seams and joints sealed with a contact adhesive. Flexible cellular insulation shall not be used on surfaces greater than 93 degrees C (200 degrees F). Insulation exposed to weather and not shown to have jacketing shall be protected with two coats of UV resistant finish as recommended by the manufacturer after the adhesive is dry.

3.1.5 Welding

No welding shall be done on piping, duct or equipment without written approval of the Contracting Officer. The capacitor discharge welding process may be used for securing metal fasteners to duct.

3.2 PIPE INSULATION INSTALLATION

3.2.1 Pipe Insulation

3.2.1.1 General

Pipe insulation shall be continuous and installed on fittings and appurtenances unless specified otherwise. Installation shall be with full length units of insulation and using a single cut piece to complete a run. Cut pieces or scraps abutting each other shall not be used. Pipe insulation shall be omitted on the following:

a. Pipe used solely for fire protection.

b. Chromium-plated pipe to plumbing fixtures. However, fixtures for use by the physically handicapped shall have the hot water supply and drain, including the trap, insulated where exposed.

c. Sanitary drain lines.

d. Unions in pipe above 16 degrees C. (60 degrees F.)

e. Strainers in pipe above 16 degrees C. (60 degrees F.)

f. Check valves in pipe above 16 degrees C. (60 degrees F.)

g. Air chambers.

3.2.1.2 Pipes Passing Through Sleeves

a. Pipe insulation shall be continuous through the sleeve \&&\.

b. An aluminum jacket with factory applied moisture barrier shall be provided over the insulation wherever penetrations require sealing.

c. Where penetrating interior walls, the aluminum jacket shall extend 50 mm (2 inches) beyond either side of the wall and shall be secured on each end with a band.

d. Where penetrating exterior walls, the aluminum jacket required for pipe exposed to weather shall continue through the sleeve to a point 50 mm (2 inches) beyond the interior surface of the wall.

3.2.1.3 Pipes Passing Through Hangers

a. Insulation, whether hot or cold application, shall be continuous through hangers. Horizontal pipes 50 mm (2 inches) and smaller shall be supported on hangers with the addition of a Type 40 protection shield to protect insulation in accordance with MSS SP-69 without the use of a high density insulation insert.

b. On support points where Type 40 shield conforming to MSS SP-69 are required for a particular pipe attachment application, insulation or an insulation insert of a density at least 144 kg per cubic meter (9 pcf) shall be installed under each shield when:

(1) the pipe size is 50 mm (2 inches) and larger

(2) the pipe size is less than 50 mm (2 inches) when the insulation shows signs of being visibly compressed, or when the insulation or jacket shows visible signs of distortion at or near the support shield.

The insert shall cover not less than the bottom 180 degree arc of the pipe. Inserts shall be the same thickness as the insulation, and shall extend 50 mm (2 inches) on each end beyond the protection shield. Inserts are not required with Type 39 pipe saddles.

c. Horizontal pipes larger than 50 mm (2 inches) below 16 degrees C (60 degrees F) shall be supported on hangers with the addition of a Type 40 protection shield in accordance with MSS SP-69. An insulation insert of cellular glass or calcium silicate shall be installed above each shield. The insert shall cover not less than the bottom 180 degree arc of the pipe. Inserts shall be the same thickness as the insulation, and shall extend 50 mm (2 inches) on each end beyond the protection shield. When insulation inserts are required per the above, and the insulation thickness is less than 25 mm (1 inch), wooden or cork dowels or blocks may be installed between the pipe and the shield to prevent the weight of the pipe from crushing the insulation as an option to installing insulation inserts. The insulation jacket shall be continuous over the wooden dowel, wooden block, or insulation insert.

d. Vertical pipes shall be supported with either Type 8 or Type 42 riser clamps with the addition of two Type 40 protection shields in accordance with MSS SP-69 covering the 360 degree arc of the insulation. An insulation

insert of cellular glass or calcium silicate shall be installed between each shield and the pipe. The insert shall cover the 360 degree arc of the pipe. Inserts shall be the same thickness as the insulation, and shall extend 50 mm (2 inches) on each end beyond the protection shield. When insulation inserts are required per the above, and the insulation thickness is less than 25 mm (1 inch), wooden or cork dowels or blocks may be installed between the pipe and the shield to prevent the hanger from crushing the insulation as an option instead of installing insulation inserts. The insulation jacket shall be continuous over the wooden dowel, wooden block, or insulation insert. The vertical weight of the pipe shall be supported with hangers located in a horizontal section of the pipe.

e. Inserts shall be covered with a jacket material of the same appearance and quality as the adjoining pipe insulation jacket, shall overlap the adjoining pipe jacket 38 mm, (1-1/2 inches,) and shall be sealed as required for the pipe jacket. The jacket material used to cover inserts in flexible cellular insulation shall conform to ASTM C 921, Type 1, and is allowed to be of a different material than the adjoining insulation material.

3.2.1.4 Flexible Cellular Pipe Insulation

Flexible cellular pipe insulation shall be tubular form for pipe sizes 125 mm (5 inches) and less. Sweat fittings shall be insulated with miter-cut pieces the same size as on adjacent piping. Screwed fittings shall be insulated with sleeved fitting covers fabricated from miter-cut pieces and shall be overlapped and sealed to the adjacent pipe insulation.

3.2.2 Aboveground Cold Pipelines

The following shall be included for aboveground cold pipelines (minus 34 degrees C to plus 16 degrees C): ((minus 30 degrees to Plus 60 degrees F):)

a. Domestic cold water.

3.2.3 Insulation Thickness

Thickness of insulation shall be as indicated in TABLE I.

TABLE I Pipe Size (mm)

Service or Range of Temp (degrees C)	Run-outs* 8 to 40	8 to 32	40 to 80	90 to 125	150 to 250	275 to 600	625 to 825
Domestic (FC)		12.7	12.7	12.7			
Cold Water (CG)		25.4	25.4	25.4	38.1		
(MF)		12.7	12.7	12.7	25.4		

TABLE I
Pipe Size (Inches)

Service or Range of Temp (degrees F)	Run-outs* 1/4 to 1-1/2	1/4 to 1-1/4	1-1/2 to 3	3-1/2 to 5	6 to 10
Domestic (FC)		1/2	1/2	1/2	
Cold Water (CG)		1	1	1	1-1/2
(MF)		1/2	1/2	1/2	1

NOTES:
CG - Cellular Glass
MF - Mineral Fiber
FC - Flexible Cellular

*When runouts to terminal units exceed 3.5 m, (12 feet,) the entire length of runout shall be insulated like the main feed pipe.

3.2.3.1 Jacket for Fibrous and Cellular Glass Insulated Pipe

Insulation shall be covered with a factory applied vapor barrier jacket or field applied seal welded PVC jacket. Insulation inside the building shown to be protected with an aluminum jacket shall have the insulation and vapor barrier jacket installed as specified herein. The aluminum jacket shall be installed as specified for piping exposed to weather, except sealing of the laps of the aluminum jacket is not required.

3.2.3.2 Insulation for Straight Runs (Fibrous and Cellular Glass)

a. Insulation shall be applied to the pipe with joints tightly butted. The ends of fibrous insulation shall be sealed off with vapor barrier material at intervals not to exceed 4.5 m. (15 feet.)

b. Longitudinal laps of the jacket material shall overlap not less than 40 mm. (1-1/2 inches.) Butt strips 75 mm (3 inches) wide shall be provided for circumferential joints.

c. Laps and butt strips shall be secured with adhesive and stapled on 100 mm (4 inch) centers if not factory self-sealing.

d. Factory self-sealing lap systems may be used when the ambient temperature is between 4 degrees C (40 degrees F) to 50 degrees C (120 degrees F) during installation. The lap system shall be installed in accordance with manufacturer's recommendations. Stapler shall be used only if specifically recommended by the manufacturer. Where gaps occur, the section shall be replaced or the gap repaired by applying adhesive under the lap and then stapling.

e. Staples and seams, including those on self-sealing lap systems with adhesive on one side shall be sealed with a vapor barrier material. Double pressure-sensitive adhesive seams need not be sealed.

f. Breaks and punctures in the jacket material shall be patched by wrapping a strip of jacket material around the pipe and securing it with adhesive, stapling, and sealed with vapor barrier material. The patch shall extend not less than 40 mm (1-1/2 inches) past the break.

g. At penetrations such as thermometers, the voids in the insulation shall be filled and sealed with vapor barrier material.

3.2.3.3 Insulation for Fittings and Accessories

a. Pipe insulation shall have ends thoroughly sealed with a vapor barrier material not more than 150 mm (6 inches) from each flange, union, valve, anchor, or fitting in all directions.

b. Insulation may be premolded or segmented. Insulation of the same thickness and conductivity as the adjoining pipe insulation shall be used. If nesting size insulation is used, the insulation should be overlapped 50 mm (2 inches) or one pipe diameter. Loose fill mineral fiber or insulating cement shall be used to fill the voids. Insulation for elbows less than 80 mm (3 inch) size shall be premolded.

Insulation for elbows 80 mm (3 inch) size and larger shall be either premolded or segmented. Elbows insulated using segments shall not have less than 3 segments per elbow. Insulation may be secured by wire or tape until finish is applied.

c. Upon completion of installation of insulation on flanges, unions, valves, anchors, fittings and accessories, terminations and insulation not protected by factory vapor barrier jackets or PVC fitting covers shall be protected with two layers of vapor barrier material with a minimum total thickness of 1.6 mm (1/16th inch). Tape seams shall overlap 25 mm. (1 inch.) The coating shall extend out onto the adjoining pipe insulation 50 mm. (2 inches.)

d. Flexible connections at pumps and other equipment shall be insulated with 15 mm (1/2 inch) flexible cellular insulation, unless otherwise indicated.

e. Insulation shall be marked showing the location of unions, strainers, and check valves.

3.2.3.4 Optional PVC Fitting Covers

At the option of the Contractor, premolded, one or two piece PVC fitting covers may be used in lieu of the vapor barrier and embedded glass tape. Factory premolded insulation segments shall be used under the fitting covers for elbows. Insulation segments shall be the same thickness as adjoining pipe insulation and the insulation shall be protected with one coat of vapor barrier coating under the PVC cover. The covers shall be secured by PVC vapor barrier tape, adhesive, seal-welding or with tacks made for securing PVC covers. Seams in the cover, and tacks and laps to adjoining pipe insulation jacket, shall be sealed with vapor barrier tape to ensure that the assembly has a continuous vapor seal. Factory or field cut blanket insulation shall not be used on pipe below 16 degrees C. (60 degrees F.)

3.2.4 Aboveground Hot Pipelines (Above 16 degrees C (60 degrees F))

The following shall be included:

a. Domestic hot water.

3.2.4.1 Insulation Thickness

Insulation thickness for pipelines handling 16 degrees C to 93 degrees c (60 degrees F to 200 degrees F) domestic hot water shall be as indicated in TABLE IV.

TABLE IV

REQUIRED THICKNESS (IN mm) OF PIPE INSULATION
FOR PIPES HANDLING POTABLE HOT WATER. MF - MINERAL FIBER
CG - CELLULAR GLASS FC - FLEXIBLE CELLULAR

Range of Service (degrees C)		Runouts* 6.4 to 38.1 mm	50.8 or less	63.5 to 76.2	Pipe Size, mm 100
16.1 to 93.3	(MF)		25.4	38.1	38.1
	(CG)		38.1	63.5	63.5
	(FC)	12.7	25.4	38.1	38.1

TABLE IV

REQUIRED THICKNESS (IN INCHES) OF PIPE INSULATION
FOR PIPES HANDLING POTABLE HOT WATER. MF - MINERAL FIBER
CG - CELLULAR GLASS FC - FLEXIBLE CELLULAR

Range of Service (degrees F)		Runouts* 1/4 to 1-1/2"	2 or less	2-1/2 to 3	Pipe Size, Inches 4
61 to 200	(MF)		1.0	1.5	1.5
	(CG)		1.5	2.5	2.5
	(FC)	1/2	1.0	1.5	1.5

*When runouts to terminal units exceed 4 m, (12 feet,) the entire length of runout shall be insulated like the main feed pipe.

3.2.4.2 Jacket for Insulated Pipe

Insulation shall be covered with a factory applied Type II jacket or field applied aluminum where required or seal welded PVC.

3.2.4.3 Insulation for Straight Runs

a. Insulation shall be applied to the pipe with joints tightly butted.

b. Longitudinal laps of the jacket material shall overlap not less than 38 mm, (1-1/2 inches,) and butt strips 75 mm (3 inches) wide shall be provided for circumferential joints.

c. Laps and butt strips shall be secured with adhesive and stapled on 100 mm (4 inch) centers if not factory self-sealing. Adhesive may be omitted where pipe is concealed.

d. Factory self-sealing lap systems may be used when the ambient temperature is between 4 degrees C and 49 degrees C (40 degrees and 120 degrees F) and shall be installed in accordance with manufacturer's instructions. Laps and butt strips shall be stapled whenever there is nonadhesion of the system. Where gaps occur, the section shall be replaced or the gap repaired by applying adhesive under the lap and then stapling.

e. Breaks and punctures in the jacket material shall be patched by wrapping a strip of jacket material around the pipe and be secured with adhesive and stapled on 100 mm (4 inch) centers if not factory self-sealing. Adhesive may be omitted where pipe is concealed. Patch shall extend not less than 38 mm (1-1/2 inches) past the break.

3.2.4.4 Insulation for Fittings and Accessories

a. The run of the line pipe insulation shall have the ends brought up to the item.

b. Insulation of the same thickness and conductivity as the adjoining pipe insulation, either premolded or segmented, shall be placed around the item abutting the adjoining pipe insulation, or if nesting size insulation is used, overlapping 50 mm (2 inches) or one pipe diameter. Loose fill mineral fiber or insulating cement shall be used to fill the voids. Insulation for elbows less than 80 mm (3 inch) size shall be premolded. Insulation for elbows 80 mm (3 inch) size and larger shall be either premolded or segmented. Elbows insulated using segments shall have not less than 3 segments per elbow. Insulation may be wired or taped on until finish is applied.

c. Upon completion of installation of insulation on flanges, unions, valves, anchors, fittings and accessories, terminations and insulation not protected by factory vapor barrier jackets or PVC fitting covers shall be protected with two coats of Class 1 adhesive applied with glass tape embedded between coats. Tape seams shall overlap 25 mm. (1 inch.) Adhesive shall extend onto the adjoining insulation not less than 50 mm. (2 inches.) The total dry film thickness shall be not less than 1.6 mm (1/16 inch).

d. Insulation terminations shall be tapered to unions at a 45-degree angle.

e. At the option of the Contractor, factory premolded one- or two-piece PVC fitting covers may be used in lieu of the adhesive and embedded glass tape. Factory premolded segments or factory or field cut blanket insert insulation segments shall be used under the cover and shall be the same thickness as adjoining pipe insulation. The covers shall be secured by PVC vapor barrier tape, adhesive, seal-welding or with tacks made for securing PVC covers.

3.2.5 Piping Exposed to Weather

3.2.5.1 Insulation for Fittings

Flanges, unions, valves, fittings, and accessories shall be insulated and finished as specified for the applicable service. Two coats of an emulsion type weatherproof mastic recommended by the insulation manufacturer shall be applied with glass tape embedded between coats. Tape overlaps shall be not less than 25 mm (1 inch) and the adjoining aluminum jacket not less than 50 mm. (2 inches.) Factory preformed aluminum jackets may be used in lieu of the above. Molded PVC fitting covers shall be used with PVC lagging and adhesive welded moisture tight.

3.2.5.2 PVC Lagging

PVC lagging shall be ultraviolet resistant and adhesive welded vapor tight with manufacturer's recommended adhesive. Installation shall include provision for thermal expansion.

3.3 DUCT INSULATION INSTALLATION

Corner angles shall be installed on external corners of insulation on ductwork in exposed finished spaces before covering with jacket. Duct insulation shall be omitted on ducts shown to be internally lined with insulation or sound absorbing material, unless indicated otherwise.

3.3.1 Insulation and Vapor Barrier for Cold Air Duct

Insulation and Vapor Barrier for Cold Air Duct (Below 16 degrees C: (60 degrees F:)) Ducts and associated equipment shall be insulated to a thickness of 50 mm (2 inches) except [relief ducts] [and] [fresh air intake ducts] which shall be insulated 38 mm (1-1/2 inches). The following shall be insulated:

a. Supply ducts.

b. Return air ducts.

c. Flexible runouts (field-insulated).

d. Fresh air intake ducts.

e. Ducts exposed to weather.

Insulation for rectangular ducts shall be flexible type where concealed, minimum density 12 kg per cubic meter (3/4 pcf) and rigid type where exposed, minimum density 48 kg per cubic meter (3 pcf). Insulation for round ducts shall be flexible type, minimum density 12 kg per cubic meter (3/4 pcf) with a factory Type I jacket. Fibrous and cellular glass insulation for exposed ducts shall be provided with either a factory-applied Type I vapor barrier jacket or a vapor barrier coating finish as specified. Fibrous and cellular glass insulation on concealed duct shall be provided with a factory-applied Type I vapor barrier jacket. Vapor barrier coating finish where indicated to be used shall be accomplished by applying two coats of vapor barrier coating with a layer of glass cloth embedded between the coats. The total dry film thickness shall be approximately 1.6 mm (1/16 inch). Duct insulation shall be continuous through sleeves and prepared openings except fire wall penetrations. Duct insulation terminating at fire dampers, shall be continuous over the damper collar and retaining angle of fire dampers, which are exposed to unconditioned air and which may be prone to condensate formation. Duct insulation and vapor barrier shall cover the collar and retaining angles of diffusers, registers and grills. Vapor barrier materials shall be applied to form a complete unbroken vapor seal over the insulation.

3.3.1.1 Installation on Concealed Duct

a. For rectangular, oval or round ducts, insulation shall be attached by applying Class 2 adhesive around the entire perimeter of the duct in 150 mm (6 inch) wide strips on 300 mm (12 inch) centers.

b. For rectangular and oval ducts, 600 mm (24 inches) and larger insulation shall be additionally secured to bottom of ducts by the use of mechanical fasteners. Fasteners shall be spaced on 450 mm (18 inch) centers and not more than 450 mm (18 inches) from duct corners.

c. For rectangular, oval and round ducts, mechanical fasteners shall be provided on sides of duct risers for all duct sizes. Fasteners shall be spaced on 450 mm (18 inch) centers and not more than 450 mm (18 inches) from duct corners.

d. Insulation shall be impaled on the mechanical fasteners where used and shall be pressed thoroughly into the adhesive. Care shall be taken to ensure vapor barrier jacket joints overlap 50 mm. (2 inches.) The insulation shall not be compressed to a thickness less than that specified. Insulation shall be carried over standing seams and trapeze-type duct hanger.

e. Self-locking washers shall be installed where mechanical fasteners are used. The pin shall be trimmed back and bent over.

f. Jacket overlaps shall be secured under the overlap with Class 2 adhesive and stapled on 100 mm (4 inch) centers. Staples and seams shall be coated with a brush coat of vapor barrier coating.

g. Breaks in the jacket material shall be covered with patches of the same material as the vapor barrier. The patches shall extend not less than 50 mm (2 inches) beyond the break or penetration in all directions and shall be secured with Class 2 adhesive and staples. Staples and joints shall be sealed with a brush coat of vapor barrier coating.

h. At jacket penetrations such as hangers thermometers and damper operating rods, voids in the insulation shall be filled and the penetration sealed with a brush coat of vapor barrier coating.

i. Insulation terminations and pin punctures shall be sealed and flashed with a reinforced vapor barrier coating finish. The coating shall overlap the adjoining insulation and uninsulated surface 50 mm. (2 inches.) Pin puncture coatings shall extend 50 mm (2 inches) from the puncture in all directions.

j. Where insulation standoff brackets occur, insulation shall be extended under the bracket and the jacket terminated at the bracket.

3.3.1.2 Installation on Exposed Duct Work

a. For rectangular ducts, rigid insulation shall be secured to the duct by mechanical fasteners on all four sides of the duct, spaced not more than 300 mm (12 inches) apart and not more than 75 mm (3 inches) from the edges of the insulation joints. A minimum of two rows of fasteners shall be provided for each side of duct 300 mm (12 inches) and larger. One row shall be provided for each side of duct less than 300 mm. (12 inches.)

b. Duct insulation shall be formed with minimum jacket seams. Each piece of rigid insulation shall be fastened to the duct using mechanical fasteners. Insulation shall be brought up to standing seams, reinforcing, and other vertical projections and shall not be carried over. Vapor barrier jacket shall be continuous across seams, reinforcing, and projections. When height of projections is greater than the insulation thickness, insulation and jacket shall be carried over.

c. Insulation shall be impaled on the fasteners; self-locking washers shall be installed and the pin trimmed and bent over.

d. Joints in the insulation jacket shall be sealed with a 100 mm (4 inch) wide strip of the same material as the vapor barrier jacket. The strip shall be secured with Class 2 adhesive and stapled. Staples and seams shall be sealed with a brush coat of vapor barrier coating.

e. Breaks and ribs or standing seam penetrations in the jacket material shall be covered with a patch of the same material as the jacket. Patches shall extend not less than 50 mm (2 inches) beyond the break or penetration and shall be secured with Class 2 adhesive and stapled. Staples and joints shall be sealed with a brush coat of vapor barrier coating.

f. At jacket penetrations such as hangers, thermometers, and damper operating rods, the voids in the insulation shall be filled and the penetrations sealed with a brush coat of vapor barrier coating.

g. Insulation terminations and pin punctures shall be sealed and flashed with a reinforced vapor barrier coating finish. The coating shall overlap the adjoining insulation and uninsulated surface 50 mm. (2 inches.) Pin puncture coatings shall extend 50 mm (2 inches) from the puncture in all directions.

h. Oval and round ducts, flexible type, shall be insulated with factory Type I jacket insulation with minimum density of 12 kg per cubic meter (3/4 pcf) attached by applying Class 2 adhesive around the entire perimeter of the duct in 150 mm (6 inch) wide stripe on 300 mm (12 inch) centers.

3.3.2 Insulation for Warm Air Duct (Above 16 deg C (60 deg F))

Ducts and associated equipment shall be insulated to a thickness of 50 mm (2 inches) except [relief ducts] [and] [fresh air intake ducts] which shall be 38 mm (1-1/2 inches). The following shall be insulated:

a. Supply ducts.

b. Return air ducts.

c. Flexible runouts (field insulated).

d. Fresh air intake ducts.

e. Ducts exposed to weather.

Insulation for rectangular ducts shall be flexible type where concealed, minimum density 12 kg per cubic meter (3/4 pcf); and rigid type where exposed, minimum density 48 kg per cubic meter (3 pcf). Insulation on exposed ducts shall be provided with factory-applied Type II jacket, or finished with Class 1 adhesive finish. Flexible type insulation shall be used for round ducts, minimum density 12 kg per cubic meter (3/4 pcf) with a factory-applied Type II jacket. Insulation on concealed duct shall be provided with a factory-applied Type II jacket. Class 1 adhesive finish where indicated to be used shall be accomplished by applying two coats of Class 1 adhesive with a layer of glass cloth embedded between the coats. The total dry film thickness shall be approximately 1.6 mm (1/16 inch). Duct insulation shall be continuous through sleeves and prepared openings. Duct insulation shall terminate at fire dampers and flexible connections.

3.3.2.1 Installation on Concealed Duct

a. For rectangular, oval and round ducts, insulation shall be attached by applying Class 2 adhesive around the entire perimeter of the duct in 150 mm (6 inch) wide strips on 300 mm (12 inch) centers.

b. For rectangular and oval ducts 600 mm (24 inches) and larger, insulation shall be secured to the bottom of ducts by the use of mechanical fasteners. Fasteners shall be spaced on 450 mm (18 inch) centers and not more than 450 mm (18 inches) from duct corner.

c. For rectangular, oval and round ducts, mechanical fasteners shall be provided on sides of duct risers for all duct sizes. Fasteners shall be

spaced on 450 mm (18 inch) centers and not more than 450 mm (18 inches) from duct corners.

d. The insulation shall be impaled on the mechanical fasteners where used and shall be pressed thoroughly into the adhesive. The insulation shall not be compressed to a thickness less than that specified. Insulation shall be carried over standing seams and trapeze-type hangers.

e. Self-locking washers shall be installed where mechanical fasteners are used and the pin trimmed and bent over.

f. Insulation jacket shall overlap not less than 50 mm (2 inches) at joints and the lap shall be secured with Class 2 adhesive under the lap and stapled on 100 mm (4 inch) centers.

3.3.2.2 Installation on Exposed Duct

a. For rectangular ducts, the rigid insulation shall be secured to the duct by the use of mechanical fasteners on all four sides of the duct, spaced not more than 300 mm (12 inches) apart and not more than 75 mm (3 inches) from the edges of the insulation joints. A minimum of two rows of fasteners shall be provided for each side of duct 300 mm (12 inches) and larger and a minimum of one row for each side of duct less than 300 mm. (12 inches.)

b. Duct insulation with factory-applied jacket shall be formed with minimum jacket seams, and each piece of rigid insulation shall be fastened to the duct using mechanical fasteners. Insulation shall be brought up to standing seams, reinforcing, and other vertical projections and shall not be carried over the projection. Jacket shall be continuous across seams, reinforcing, and projections. Where height of projections is greater than the insulation thickness, insulation and jacket shall be carried over the projection.

c. Insulation shall be impaled on the fasteners; self-locking washers shall be installed and pin excess clipped and bent over.

d. Joints on jacketed insulation shall be sealed with a 100 mm (4 inch) wide strip of the same material as the jacket. The strip shall be secured with Class 2 adhesive and stapled.

e. Breaks and penetrations in the jacket material shall be covered with a patch of the same material as the jacket. Patches shall extend not less than 50 mm (2 inches) beyond the break or penetration and shall be secured with Class 2 adhesive and stapled.

f. Insulation terminations and pin punctures shall be sealed and flashed with a Class 1 adhesive. Two coats of Class 1 adhesive coating shall be applied with glass cloth embedded between coats. The total coating shall have a dry film thickness of approximately 1.6 mm (1/16 inch) and shall overlap the adjoining insulation and uninsulated surface 50 mm. (2 inches.)

g. Oval and round ducts, flexible type, shall be insulated with factory Type I jacket insulation, minimum density of 12 kg per cubic meter (3/4 pcf) attached by applying Class 2 adhesive around the entire perimeter of the duct in 150 mm (6 inch) wide stripe on 300 mm (12 inch) center. Joints shall be sealed with a 100 mm (4 inch) wide strip of the same material as the jacket. The strip shall be secured with Class 2 adhesive and stapled.

3.3.3 Ducts Handling Air for Dual Purpose

For air handling ducts for dual purpose (below and above 16 degrees C, (60 degrees F,)) ducts shall be insulated as specified for cold air duct.

3.3.4 Duct Test Holes

After duct systems have been tested, adjusted, and balanced, breaks in the insulation and jacket shall be repaired in accordance with the applicable section of this specification for the type of duct insulation to be repaired.

3.3.5 Duct Exposed to Weather

3.3.5.1 Installation

Ducts exposed to weather shall be insulated and finished as specified for the applicable service for exposed duct inside the building. After the above is accomplished, the insulation shall then be further finished. When polyethylene with ultraviolet resistant stabilizers is applied to external duct, it shall be finished with two coats of acrylic latex paint on exposed surfaces.

3.3.5.2 Fittings

Fittings and other irregular shapes shall be finished as specified for rectangular ducts.

3.3.5.3 Rectangular Ducts

Two coats of weatherproof mastic shall be applied to the entire surface with a layer of glass cloth embedded between coats. Glass cloth overlaps at joints and adjoining surfaces shall be not less than 50 mm. (2 inches.) Each coat of weatherproof mastic shall be 1.6 mm (1/16 inch) minimum thickness. The top of the exterior duct work shall be built up with insulation in such a manner as to ensure a positive drain of any rain water which may appear. The minimum pitch of the built up section shall be in accordance with the recommendation of the manufacturer of the vapor barrier/weatherproof mastic. Care should be taken in the construction of the built up section so that no low areas appear; this shall ensure no "pooling" of water on the vapor barrier which leads to premature degradation of the barrier and subsequent deterioration of the insulation.

- - o O o - -

SECTION 15330

WET PIPE SPRINKLER SYSTEM, FIRE PROTECTION

PART 1 GENERAL

1.1 REFERENCES

The publications listed below form a part of this specification to the extent referenced. The publications are referred to in the text by basic designation only.

AMERICAN SOCIETY FOR TESTING AND MATERIALS (ASTM)

ASTM A 47	(1990) Ferritic Malleable Iron Castings
ASTM A 53	(1993a) Pipe, Steel, Black and Hot-Dipped, Zinc-Coated Welded and Seamless
ASTM A 135	(1993) Electric-Resistance-Welded Steel Pipe
ASTM A 183	(1983; R 1990) Carbon Steel Tract Bolts and Nuts
ASTM A 536	(1984; R 1993) Ductile Iron Castings
ASTM A 795	(1993) Black and Hot-Dipped Zinc-Coated (Galvanized) Welded and Seamless Steel Pipe for Fire Protection Use

AMERICAN SOCIETY OF MECHANICAL ENGINEERS (ASME)

ASME B16.1	(1989) Cast Iron Pipe Flanges and Flanged Fittings
ASME B16.3	(1992) Malleable Iron Threaded Fittings
ASME B16.4	(1992) Cast Iron Threaded Fittings
ASME B16.9	(1993) Factory-Made Wrought Steel Buttwelding Fittings
ASME B16.11	(1991) Forged Fittings, Socket-Welding and Threaded
ASME B16.21	(1992) Nonmetallic Flat Gaskets for Pipe Flanges
ASME B18.2.1	(1981; Supple 1991; R 1992) Square and Hex Bolts and Screws (Inch Series)
ASME B18.2.2	(1987; R 1993) Square and Hex Nuts (Inch Series)

AMERICAN SOCIETY OF SANITARY ENGINEERING (ASSE)

ASSE 1013	(1988) Reduced Pressure Principle Backflow Preventers

AMERICAN WATER WORKS ASSOCIATION (AWWA)

AWWA-01	(1992) Standard Methods for the Examination of Water and Wastewater
AWWA B300	(1992) Hypochlorites
AWWA B301	(1992) Liquid Chlorine
AWWA C104	(1990) Cement-Mortar Lining for Ductile-Iron Pipe and Fittings for Water

AWWA C110	(1993) Ductile-Iron and Gray-Iron Fittings, 3 In. through 48 In. (75 mm through 1200 mm) , for Water and Other Liquids
AWWA C111	(1990) Rubber-Gasket Joints for Ductile-Iron Pressure Pipe and Fittings
AWWA C151	(1991) Ductile-Iron Pipe, Centrifugally Cast, for Water or Other Liquids
AWWA C203	(1991) Coal-tar Protective Coatings and Linings for Steel Water Pipelines - Enamel and Tape - Hot-Applied
AWWA M20	(1973) Manual: Water Chlorination Principles and Practices

FACTORY MUTUAL ENGINEERING AND RESEARCH (FM)

FM P7825	(1994; Supple I, II & III) Approval Guide

MANUFACTURERS STANDARDIZATION SOCIETY OF THE VALVE AND FITTINGS INDUSTRY (MSS)

MSS SP-71	(1990) Cast Iron Swing Check Valves, Flanges and Threaded Ends

NATIONAL FIRE PROTECTION ASSOCIATION (NFPA)

NFPA 13	(1994) Installation of Sprinkler Systems
NFPA 24	(1992) Installation of Private Fire Service Mains and Their Appurtenances
NFPA 1963	(1993) Fire Hose Connections

NATIONAL INSTITUTE FOR CERTIFICATION IN ENGINEERING TECHNOLOGIES (NICET)

NICET 1014	(1992) Detail Manual for Certification in the Field of Fire Protection Engineering Technology (Field 003) Automatic Sprinkler System Layout

UNDERWRITERS LABORATORIES (UL)

UL-01	(1994; Supple) Building Materials Directory
UL-04	(1994; Supple) Fire Protection Equipment Directory

1.2 GENERAL REQUIREMENTS

Wet pipe sprinkler system shall be provided in areas indicated on the drawings. The sprinkler system shall provide fire sprinkler protection for the entire area. Except as modified herein, the system shall be designed and installed in accordance with NFPA 13. Pipe sizes which are not indicated on drawings shall be determined by hydraulic calculation.

1.2.1 Hydraulic Design

The system shall be hydraulically designed to discharge a minimum density of 6.1 L/min per square meter (0.15 gpm per square foot) over the entire building area. The minimum pipe size for branch lines in gridded systems shall be 32 mm (1-1/4 inch). Hydraulic calculations shall be in accordance with the Area/Density Method of NFPA 13.

1.2.1.1 Hose Demand

An allowance for exterior hose streams of 1,892 L/min (500 gpm) shall be added to the sprinkler system demand at the fire hydrant shown on the drawings closest to the point where the water service enters the building.

1.2.1.2 Basis for Calculations

The design of the system shall be based upon a water supply with a static pressure of 45 psig, and a flow of 1,500 gpm at a residual pressure of 36 psig. Water supply shall be presumed available at the connection to the new 10" site water main on north side of building. Assume a flow of 750 gpm in first fire hydrant. Hydraulic calculations shall be based upon the Hazen-Williams formula with a "C" value of 120 for steel piping, 150 for copper tubing, 140 for new cement-lined ductile-iron piping.

1.2.2 Sprinkler Spacing

Sprinklers shall be uniformly spaced on branch lines. Maximum spacing per sprinkler shall not exceed 12.1 square meters. (130 square feet.)

1.3 SUBMITTALS

Submittals related to system configuration, hydraulic calculations, and equipment selection, including manufacturer's catalog data, working drawings, connection drawings, control diagrams and certificates shall be submitted concurrently as a complete package. The package will be reviewed by the U.S. Army Engineer District Fire Protection Engineer. The following shall be submitted in accordance with Section 01300 SUBMITTAL PROCEDURES:

SD-01 Data

Sprinkler System Equipment.

Manufacturer's Catalog Data for each separate piece of equipment proposed for use in the system. Data shall indicate the name of the manufacturer of each item of equipment, with data highlighted to indicate model, size, options, etc. proposed for installation. In addition, a complete equipment list which includes equipment description, model number and quantity shall be provided.

Hydraulic Calculations.

Hydraulic calculations, including a drawing showing hydraulic reference points and pipe segments.

Spare Parts.

Spare parts data shall be included for each different item of material and equipment specified. The data shall include a complete list of parts and supplies, with current unit prices and source of supply, and a list of parts recommended by the manufacturer to be replaced after 1 year and 3 years of service. A list of special tools and test equipment required for maintenance and testing of the products supplied by the Contractor shall be included.

SD-04 Drawings

Sprinkler System Shop Drawings.

Detail drawings conforming to the requirements established for working plans as prescribed in NFPA 13. Drawings shall include plan and elevation views which establish that the equipment will fit the allotted spaces with clearance for installation and maintenance. Each set of drawings shall include the following:

a. Descriptive index of drawings in the submittal with drawings listed in sequence by drawing number. A legend identifying device symbols, nomenclature, and conventions used.

b. Floor plans drawn to a scale not less than 1:100 (1/8" = 1'-0") which clearly show locations of sprinklers, risers, pipe hangers, seismic separation assemblies, sway bracing, inspector's test connections, drains, and other applicable details necessary to clearly describe the proposed arrangement. Each type of fitting used and the locations of bushings, reducing couplings, and welded joints shall be indicated.

c. Actual center-to-center dimensions between sprinklers on branch lines and between branch lines; from end sprinklers to adjacent walls; from walls to branch lines; from sprinkler feed mains, cross-mains and branch lines to finished floor and roof or ceiling. A detail shall show the dimension from the sprinkler and sprinkler deflector to the ceiling in finished areas.

d. Longitudinal and transverse building sections showing typical branch line and cross-main pipe routing as well as elevation of each typical sprinkler above finished floor.

e. Details of each type of riser assembly; pipe hanger; sway bracing for earthquake protection, and restraint of underground water main at point-of-entry into the building, and electrical devices and interconnecting wiring.

As-Built Drawings.

As-built drawings, no later than 14 working days after completion of the Final Tests. The sprinkler system shop drawings shall be updated to reflect as-built conditions after work is completed and shall be on reproducible full-size Mylar film.

SD-06 Instructions

Test Procedures.

Proposed test procedures for piping hydrostatic test, testing of alarms, at least 14 days prior to the start of related testing.

SD-07 Schedules

Preliminary Tests.

A schedule of preliminary tests, at least 14 days prior to the proposed start of the tests.

Final Test.

Upon successful completion of tests specified under PRELIMINARY TESTS, written notification shall be given to the Contracting Officer of the date for the final acceptance test. Notification shall be provided at least 14 days prior to the proposed start of the test. Notification shall include a copy of the Contractor's Material & Test Certificates.

SD-08 Statements

Installer Qualifications.

Qualifications of the sprinkler installer.

Submittal Preparer's Qualifications.

The name and documentation of certification of the individual who will prepare the submittals, prior to the submittal of the drawings and hydraulic calculations.

SD-13 Certificates

Contractor's Material & Test Certificates.

Certificates, as specified in NFPA 13, shall be completed and signed by the Contractor's Representative performing required tests for both underground and aboveground piping.

SD-19 Operation and Maintenance Manuals

Sprinkler System.

Manuals shall be in loose-leaf binder format and grouped by technical sections consisting of manufacturer's standard brochures, schematics, printed instructions, general operating procedures, and safety precautions. The manuals shall list routine maintenance procedures possible breakdowns, and repairs, and troubleshooting guide. This shall include procedures and instructions pertaining to frequency of preventive maintenance, inspection, adjustment, lubrication and cleaning necessary to minimize corrective maintenance and repair.

1.4 HYDRAULIC CALCULATIONS

Hydraulic calculations shall be as outlined in NFPA 13 except that calculations shall be performed by computer using software specifically designed for fire protection system design. Software which uses k-factors for typical branch lines is not acceptable. Calculations shall be taken back to the water supply source unless water supply data is otherwise indicated. Water supply curves and system requirements shall be plotted on semi-logarithmic graph paper so as to present a summary of the complete hydraulic calculation. A summary sheet listing sprinklers in the design area and their respective hydraulic reference points, elevations, actual discharge pressures and actual flows shall be provided. Elevations of hydraulic reference points (nodes) shall be indicated. Documentation shall identify each pipe individually and the nodes connected thereto. The diameter, length, flow, velocity, friction loss, number and type fittings, total friction loss in the pipe, equivalent pipe length and Hazen-Williams coefficient shall be indicated for each pipe. A drawing showing hydraulic reference points (nodes) and pipe designations used in the calculations shall be included and shall be independent of shop drawings.

1.5 SUBMITTAL PREPARER'S QUALIFICATIONS

The sprinkler system submittals, including as-built drawings, shall be prepared by an individual who is either a registered professional engineer or who is certified as a Level III IV Technician by National Institute for Certification in Engineering Technologies (NICET) in the Automatic Sprinkler System Layout subfield of Fire Protection Engineering Technology in accordance with NICET 1014.

1.6 INSTALLER QUALIFICATIONS

The installer shall be experienced and regularly engaged in the installation of the type and complexity of system included in this project. A statement prior to submittal of any other data or drawings, that the proposed sprinkler system installer is regularly engaged in the installation of the type and complexity of system included in this project shall be provided. In addition, data identifying the location of at least three systems recently installed by the proposed installer which are comparable to the system specified shall be submitted. Contractor shall certify that each system has performed satisfactorily, in the manner intended, for a period of not less than 6 months.

1.7 REGULATORY REQUIREMENTS

Compliance with referenced NFPA standards is mandatory. This includes advisory provisions listed in the appendices of such standards, as though the word "shall" had been substituted for the word "should" wherever it appears. Applicable material and installation standards referenced in

Appendix A of NFPA 13 and NFPA 24 shall be considered mandatory the same as if such referenced standards were specifically listed in this specification. In the event of a conflict between specific provisions of this specification and applicable NFPA standards, this specification shall govern. All requirements that exceed the minimum requirements of NFPA 13 shall be incorporated into the design. Reference to "authority having jurisdiction" shall be interpreted to mean the Contracting Officer.

1.8 DELIVERY AND STORAGE

Equipment placed in storage shall be stored with protection from the weather, humidity and temperature variations, dirt and dust or other contaminants.

PART 2 PRODUCTS

2.1 GENERAL EQUIPMENT REQUIREMENTS

2.1.1 Standard Products

Materials and equipment shall be standard products of a manufacturer regularly engaged in the manufacture of such products and shall essentially duplicate items that have been in satisfactory use for at least 2 years prior to bid opening.

2.1.2 Requirements for Fire Protection Service

Equipment and materials shall have been tested by Underwriters Laboratories, Inc. and listed in UL-04 or approved by Factory Mutual and listed in FM P7825. Where the terms "listed" or "approved" appear in this specification, such shall mean listed in UL-04 or FM P7825.

2.1.3 Nameplates

Major components of equipment shall have the manufacturer's name, address, type or style, model or serial number, and catalog number on a plate permanently affixed to the item of equipment.

2.2 UNDERGROUND PIPING SYSTEMS

2.2.1 Pipe

Piping from a point 150 mm (6 inches) above the floor to the point of connection to the existing water mains shall be ductile iron with a rated working pressure of 1034 kPa (150 psi) conforming to AWWA C151, with cement mortar lining conforming to AWWA C104. Piping more than 1500 mm (5 feet) outside the building walls shall comply with Section 02660 WATER LINES.

2.2.2 Fittings and Gaskets

Fittings shall be ductile iron conforming to AWWA C110. Gaskets shall be suitable in design and size for the pipe with which such gaskets are to be used. Gaskets for ductile iron pipe joints shall conform to AWWA C111.

2.2.3 Gate Valve and Indicator Posts

Gate valves for underground installation shall be of the inside screw type with counter-clockwise rotation to open. Where indicating type valves are shown or required, indicating valves shall be gate valves with an approved indicator post of a length to permit the top of the post to be located 900 mm (3 feet) above finished grade. Gate valves and indicator posts shall be listed in UL-04 or FM P7825.

2.3 ABOVEGROUND PIPING SYSTEMS

Aboveground piping shall be steel.

2.3.1 Steel Piping System

2.3.1.1 Steel Pipe

Except as modified herein, steel pipe shall be black as permitted by NFPA 13 and shall conform to applicable provisions of ASTM A 795, ASTM A 53, or ASTM A 135. Pipe in which threads or grooves are cut shall be Schedule 40. Pipe shall be marked with the name of the manufacturer, kind of pipe, and ASTM designation.

2.3.1.2 Fittings for Non-Grooved Steel Pipe

Fittings shall be cast iron conforming to ASME B16.4, steel conforming to ASME B16.9 or ASME B16.11, or malleable iron conforming to ASME B16.3. Fittings into which sprinklers, drop nipples or riser nipples (sprigs) are screwed shall be threaded type. Plain-end fittings with mechanical couplings, fittings which use steel gripping devices to bite into the pipe and segmented welded fittings shall not be used.

2.3.1.3 Grooved Mechanical Joints and Fittings

Joints and fittings shall be designed for not less than 1200 kPa (175 psi) service and shall be the product of the same manufacturer. Fitting and coupling houses shall be malleable iron conforming to ASTM A 47, Grade 32510; ductile iron conforming to ASTM A 536, Grade 65-45-12. Gasket shall be the flush type that fills the entire cavity between the fitting and the pipe. Nuts and bolts shall be heat-treated steel conforming to ASTM A 183 and shall be cadmium plated or zinc electroplated.

2.3.1.4 Flanges

Flanges shall conform to NFPA 13 and ASME B16.1. Gaskets shall be non-asbestos compressed material in accordance with ASME B16.21, 1.6 mm (1/16 inch) thick, and full face or self-centering flat ring type. Bolts shall be square head conforming to ASME B18.2.1 and nuts shall be hexagon type conforming to ASME B18.2.2.

2.3.2 Pipe Hangers

Hangers shall be listed in UL-04 or FM P7825 and of the type suitable for the application, construction, and pipe type and sized involved.

2.3.3 Valves

2.3.3.1 Gate Valve

Manually operated sprinkler gate valve shall be outside stem and yoke (OS&Y) type and shall be listed in UL-01 or FM P7825.

2.3.3.2 Check Valve

Check valve 50 mm (2 inches) and larger shall be listed in UL-01 or FM P7825. Check valves 100 mm (4 inches) (4 inches) and larger shall be of the swing type with flanged cast iron body and flanged inspection plates, shall have a clear waterway and shall meet the requirements of MSS SP-71, for Type 3 or 4.

2.4 ALARM CHECK VALVE ASSEMBLY

Assembly shall include an alarm check valve, standard trim piping, pressure gauges, bypass, retarding chamber, testing valves, main drain, and other components as required for a fully operational system.

2.5 ELECTRIC ARLARM GONG

Electric alarm gong shall be heavy-duty, vibrating stroke, 10 inches bell with red finish. Gong shall operate from 24 volts dc electrical service. Gong shall have standard 4 inches outlet box mounting for surface mounting

with weatherproof and concealed conduit mountings. Bell shall provide alarm rating at 10 feet of 87 dBA minimum/104 dBA typical.

2.6 ALARM INITIATING AND SUPERVISORY DEVICES

2.6.1 Sprinkler Pressure (Waterflow) Alarm Switch

Pressure switch shall include a metal housing with a neoprene diaphragm, SPDT snap action switches and a 15 mm (1/2 inch) NPT male pipe thread. The switch shall have a maximum service pressure rating of 1207 kPa (175 psi). There shall be two SPDT (Form C) contacts factory adjusted to operate at 28 to 55 kPa. (4 to 8 psi.) The switch shall be capable of being mounted in any position in the alarm line trim piping of the alarm check valve. Use one SPDT contact for activation of electric alarm gong.

2.6.2 Valve Supervisory (Tamper) Switch

Switch shall be suitable for mounting to the type of control valve to be supervised open. The switch shall be tamper resistant and contain one set of SPDT (Form C) contacts arranged to transfer upon removal of the housing cover or closure of the valve of more than two rotations of the valve stem. Provide tamper switch for each control (isolation) valve, including PIV.

2.7 FIRE DEPARTMENT CONNECTION

Fire department connection shall be projecting type with cast brass body, matching wall escutcheon lettered "Auto Spkr" with a polished brass finish. The connection shall have two inlets with individual self-closing clappers, caps with drip drains and chains. Female inlets shall have 65 mm (2-1/2 inch) diameter American National Fire Hose Connection Screw Threads (NH) per NFPA 1963.

2.8 SPRINKLERS

Sprinklers shall be used in accordance with their listed spacing limitations. Temperature classification shall be as indicated. Sprinklers in high heat areas including attic spaces or in close proximity to unit heaters shall have temperature classification in accordance with NFPA 13.

2.8.1 Upright Sprinkler

Upright sprinkler shall be brass and shall have a nominal 12.7 mm (1/2 inch) or 13.5 mm (17/32 inch) orifice.

2.8.2 Pendent Sprinkler

Pendent sprinkler shall be of the fusible strut or glass bulb type, nonrecessed type with nominal 12.7 mm (1/2 inch) or 13.5 mm (17/32 inch) orifice. Pendent sprinklers shall have a brass finish.

2.9 DISINFECTING MATERIALS

2.9.1 Liquid Chlorine

Liquid chlorine shall conform to AWWA B301.

2.9.2 Hypochlorites

Calcium hypochlorite and sodium hypochlorite shall conform to AWWA B300.

2.10 ACCESSORIES

2.10.1 Sprinkler Cabinet

Spare sprinklers shall be provided in accordance with NFPA 13 and shall be packed in a suitable metal or plastic cabinet. Spare sprinklers shall be representative of, and in proportion to, the number of each type and temperature rating of the sprinklers installed. At least one wrench of each type required shall be provided.

2.10.2 Identification Sign

Valve identification sign shall be minimum 150 mm wide x 50 mm high (6 inches wide x 2 inches high) with enamel baked finish on minimum 1.214 mm (18 gauge) steel or 0.6 mm (0.024 inch) aluminum with red letters on a white background or white letters on red background. Wording of sign shall include, but not be limited to "main drain," "auxiliary drain," "inspector's test," "alarm test," "alarm line," and similar wording as required to identify operational components.

2.11 REDUCED PRESSURE PRINCIPLE BACKFLOW PREVENTION ASSEMBLY

Reduced pressure principle backflow prevention assembly shall comply with ASSE 1013. The assembly shall have a bronze, cast-iron or stainless steel body with flanged ends. The assembly shall include OS&Y shutoff valves on the inlet and outlet, reduced pressure zone, and four test cocks. Assemblies shall be rated for working pressure of 1034 kPa (150 psi). The maximum pressure loss shall be 40 kPa (6 psi) at a flow rate equal to the sprinkler water demand, at the location of the assembly.

PART 3 EXECUTION

3.1 INSTALLATION REQUIREMENTS

The installation shall be in accordance with the applicable provisions of NFPA 13, NFPA 24 and publications referenced therein. Installation of in-rack sprinklers shall comply with applicable provisions of NFPA 231C.

3.2 ABOVEGROUND PIPING INSTALLATION

Piping shall be run straight and bear evenly on hangers and supports.

3.2.1 Protection of Piping Against Earthquake Damage

The system piping shall be protected against damage from earthquakes. Seismic protection of the piping system shall be provided in accordance with NFPA 13 and Appendix A, with the exception that the "Earthquake Zones" map of Appendix A shall not apply to this project. Seismic protection shall include flexible couplings, sway bracing, seismic separation assemblies where piping crosses building seismic separation joints, and other features as required in NFPA 13 for protection of piping against damage from earthquakes. Branch lines shall be equipped with sway braces at the end sprinkler head and at intervals not exceeding 9 m (30 ft).

3.2.2 Piping in Exposed Areas

Exposed piping shall be installed so as not to diminish exit access widths, corridors or equipment access. Exposed horizontal piping, including drain piping, shall be installed to provide maximum headroom.

3.2.3 Pendent Sprinklers

Drop nipples to pendent sprinklers shall consist of minimum 25 mm (1 inch) pipe with a reducing coupling into which the sprinkler shall be threaded. Hangers shall be provided on arm-overs to drop nipples supplying pendent sprinklers when the arm-over exceeds 300 mm. (12 inches.)

3.2.4 Upright Sprinklers

Riser nipples or "sprigs" to upright sprinklers shall contain no fittings between the branch line tee and the reducing coupling at the sprinkler. Riser nipples exceeding 750 mm (30 inches) in length shall be individually supported.

3.2.5 Pipe Joints

Pipe joints shall conform to NFPA 13, except as modified herein. Not more than four threads shall show after joint is made up. Welded joints will be permitted, only if welding operations are performed as required by NFPA 13

at the Contractor's fabrication shop, not at the project construction site. Flanged joints shall be provided where indicated or required by NFPA 13. Grooved pipe and fittings shall be prepared in accordance with the manufacturer's latest published specification according to pipe material, wall thickness and size. Grooved couplings and fittings shall be from the same manufacturer.

3.2.6 Reducers

Reductions in pipe sizes shall be made with one-piece tapered reducing fittings. The use of grooved-end or rubber-gasketed reducing couplings will not be permitted. When standard fittings of the required size are not manufactured, single bushings of the face type will be permitted. Where used, face bushings shall be installed with the outer face flush with the face of the fitting opening being reduced. Bushings shall not be used in elbow fittings, in more than one outlet of a tee, in more than two outlets of a cross, or where the reduction in size is less than 15 mm (1/2 inch).

3.2.7 Pipe Penetrations

Cutting structural members for passage of pipes or for pipe-hanger fastenings will not be permitted. Pipes that must penetrate concrete or masonry walls or concrete floors shall be core-drilled and provided with pipe sleeves. Each sleeve shall be Schedule 40 galvanized steel, ductile iron or cast iron pipe and shall extend through its respective wall or floor and be cut flush with each wall surface. Sleeves shall provide required clearance between the pipe and the sleeve per NFPA 13. The space between the sleeve and the pipe shall be firmly packed with mineral wool insulation. In penetrations which are not fire-rated or not a floor penetration, the space between the sleeve and the pipe shall be sealed at both ends with plastic waterproof cement which will dry to a firm but pliable mass or with a mechanically adjustable segmented elastomer seal.

3.2.8 Inspector's Test Connection

Unless otherwise indicated, test connection shall consist of 25 mm (1 inch) pipe connected to the remote branch line; a test valve located approximately 2 meters (7 feet) above the floor; a smooth bore brass outlet equivalent to the smallest orifice sprinkler used in the system; and a painted metal identification sign affixed to the valve with the words "Inspector's Test." The discharge orifice shall be located outside the building wall directed so as not to cause damage to adjacent construction or landscaping during full flow discharge.

3.2.9 Drains

Main drain piping shall be provided to discharge at a safe point outside the building. Auxiliary drains shall be provided as required by NFPA 13 except that drain valves shall be used where drain plugs are otherwise permitted. Where branch lines terminate at low points and form trapped sections, such branch lines shall be manifolded to a common drain line.

3.2.10 Installation of Fire Department Connection

Connection shall be mounted on the exterior wall approximately 900 mm (3 feet) above finished grade. The piping between the connection and the check valve shall be provided with an automatic drip in accordance with NFPA 13 and arranged to drain to the outside.

3.2.11 Identification Signs

Signs shall be affixed to each control valve, inspector test valve, main drain, auxiliary drain, test valve, and similar valves as appropriate or as required by NFPA 13. Hydraulic design data nameplates shall be permanently affixed to each sprinkler riser as specified in NFPA 13.

3.3 UNDERGROUND PIPING INSTALLATION

The fire protection water main shall be laid, and joints anchored, in accordance with NFPA 24. Minimum depth of cover shall be 900 mm. (3 feet.) The supply line shall terminate inside the building with a flanged piece, the bottom of which shall be set not less than 150 mm (6 inches) above the finished floor. A blind flange shall be installed temporarily on top of the flanged piece to prevent the entrance of foreign matter into the supply line. A concrete thrust block shall be provided at the elbow where the pipe turns up toward the floor. In addition, joints shall be anchored in accordance with NFPA 24 using pipe clamps and steel rods from the elbow to the flange above the floor and from the elbow to a pipe clamp in the horizontal run of pipe. Buried steel components shall be provided with a corrosion protective coating in accordance with AWWA C203. Piping more than 1500 mm (5 feet) outside the building walls shall meet the requirements of Section 02660 WATER LINES.

3.4 EARTHWORK

Earthwork shall be performed in accordance with applicable provisions of Section 02221 EXCAVATION, FILLING AND BACKFILLING FOR BUILDINGS.

3.5 ELECTRICAL WORK

Alarm signal wiring connected to the building fire alarm control system shall be in accordance with Section 16721 FIRE DETECTION AND ALARM SYSTEM. All wiring for supervisory and alarm circuits shall be #14 AWG solid copper installed in metallic tubing or conduit. Wiring color code shall remain uniform throughout the system.

3.6 FIELD PAINTING AND FINISHING

Field painting and finishing are specified in Section 09900 PAINTING, GENERAL.

3.7 PRELIMINARY TESTS

The system, including the underground water mains, and the aboveground piping and system components, shall be tested to assure that equipment and components function as intended. The underground and aboveground interior piping systems and attached appurtenances subjected to system working pressure shall be tested in accordance with NFPA 13 and NFPA 24. Upon completion of specified tests, the Contractor shall complete certificates as specified in paragraph SUBMITTALS.

3.7.1 Underground Piping

3.7.1.1 Flushing

Underground piping shall be flushed in accordance with NFPA 24. This includes the requirement to flush the lead-in connection to the fire protection system at a flow rate not less that the calculated maximum water demand rate of the system.

3.7.1.2 Hydrostatic Testing

New underground piping shall be hydrostatically tested in accordance with NFPA 24. The allowable leakage shall be measured at the specified test pressure by pumping from a calibrated container. The amount of leakage at the joints shall not exceed 1.89 liters (2 quarts) per hour per 100 gaskets or joints, regardless of pipe diameter.

3.7.2 Aboveground Piping

3.7.2.1 Hydrostatic Testing

Aboveground piping shall be hydrostatically tested in accordance with NFPA 13 at not less than 1400 kPa (200 psi) or 350 kPa (50 psi) in excess of maximum system operating pressure and shall maintain that pressure without

loss for 2 hours. There shall be no drop in gauge pressure or visible leakage when the system is subjected to the hydrostatic test. The test pressure shall be read from a gauge located at the low elevation point of the system or portion being tested.

3.7.3 Testing of Alarm Devices

Each alarm switch shall be tested by flowing water through the inspector's test connection. Each water-operated alarm devices shall be tested to verify proper operation.

3.7.4 Main Drain Flow Test

Following flushing of the underground piping, a main drain test shall be made to verify the adequacy of the water supply. Static and residual pressures shall be recorded on the certificate specified in paragraph SUBMITTALS. In addition, a main drain test shall be conducted each time after a main control valve is shut and opened.

3.8 FINAL ACCEPTANCE TEST

A technician employed by the installing Contractor shall be present for the final tests and shall provide a complete demonstration of the operation of the system. This shall include operation of valves and flowing of inspector's test connections to verify operation of associated waterflow alarm switches. After operation of valves has been completed, the main drain test shall be repeated to assure that control valves are in the open position. In addition, the representative shall have available copies of as-built drawings and certificates of tests previously conducted. The installation shall not be considered accepted until identified discrepancies have been corrected and test documentation is properly completed and received.

- - o O o - -

SECTION 15400

PLUMBING, GENERAL PURPOSE

PART 1 GENERAL

1.1 REFERENCES

The publications listed below form a part of this specification to the extent referenced. The publications are referred to in the text by basic designation only.

AIR CONDITIONING AND REFRIGERATION INSTITUTE (ARI)

ARI 1010	(1984) Drinking-Fountains and Self-Contained, Mechanically-Refrigerated Drinking-Water Coolers

AMERICAN NATIONAL STANDARDS INSTITUTE (ANSI)

ANSI SAMA Z236.1	(1983) Liquid-In-Glass Thermometers - General Purpose Laboratory Use
ANSI Z21.22	(1990; Z21.22a) Relief Valves and Automatic Gas Shutoff Devices for Hot Water Supply Systems

AMERICAN SOCIETY FOR TESTING AND MATERIALS (ASTM)

ASTM A 47	(1990) Ferritic Malleable Iron Castings
ASTM A 53	(1993) Pipe, Steel, Black and Hot-Dipped, Zinc-Coated Welded and Seamless
ASTM A 74	(1993) Cast Iron Soil Pipe and Fittings
ASTM A 105	(1993) Forgings, Carbon Steel, for Piping Components
ASTM A 183	(1983; R 1990) Carbon Steel Track Bolts and Nuts
ASTM A 193	(1993a) Alloy-Steel and Stainless Steel Bolting Materials for High-Temperature Service
ASTM A 515	(1992) Pressure Vessel Plates, Carbon Steel, for Intermediate- and Higher-Temperature Service
ASTM A 516	(1990) Pressure Vessel Plates, Carbon Steel, for Moderate- and Lower-Temperature Service
ASTM A 536	(1984; R 1993) Ductile Iron Castings
ASTM A 888	(1990) Hubless Cast Iron Soil Pipe and Fittings for Sanitary and Storm Drain, Waste and Vent Piping Applications
ASTM B 32	(1993) Solder Metal
ASTM B 42	(1993) Seamless Copper Pipe, Standard Sizes
ASTM B 75	(1992a) Seamless Copper Tube
ASTM B 88	(1993) Seamless Copper Water Tube
ASTM B 117	(1990) Salt Spray (Fog) Testing
ASTM B 152	(1992) Copper Sheet, Strip, Plate, and Rolled Bar
ASTM B 370	(1992) Copper Sheet and Strip for Building Construction

ASTM B 584	(1993a) Copper Alloy Sand Castings for General Applications
ASTM B 813	(1991) Liquid and Paste Fluxes for Soldering Applications of Copper and Copper Alloy Tube
ASTM C 564	(1988) Rubber Gaskets for Cast Iron Soil Pipe and Fittings
ASTM C 920	(1987) Elastomeric Joint Sealants
ASTM D 638	(1991) Tensile Properties of Plastics
ASTM D 1004	(1993) Initial Tear Resistance of Plastic Film and Sheeting
ASTM D 1248	(1984; R 1989) Polyethylene Plastics Molding and Extrusion Materials
ASTM D 1785	(1993) Poly(Vinyl Chloride) (PVC) Plastic Pipe, Schedules 40, 80, and 120
ASTM D 2000	(1990) Rubber Products in Automotive Applications
ASTM D 2241	(1993) Poly(Vinyl Chloride) (PVC) Pressure-Rated Pipe (SDR Series)
ASTM D 2464	(1993) Threaded Poly(Vinyl Chloride) (PVC) Plastic Pipe Fittings, Schedule 80
ASTM D 2466	(1993) Poly(Vinyl Chloride) (PVC) Plastic Pipe Fittings, Schedule 40
ASTM D 2467	(1993) Socket-Type Poly(Vinyl Chloride) (PVC) Plastic Pipe Fittings, Schedule 80
ASTM D 2485	(1991) Evaluating Coatings for High Temperature Service
ASTM D 2564	(1993) Solvent Cements for Poly(Vinyl Chloride) (PVC) Plastic Piping Systems
ASTM D 2657	(1990) Heat - Joining Polyolefin Pipe and Fittings
ASTM D 2665	(1993a) Poly(Vinyl Chloride) (PVC) Plastic Drain, Waste, and Vent Pipe and Fittings
ASTM D 2672	(1993) Joints for IPS PVC Pipe Using Solvent Cement
ASTM D 2822	(1991) Asphalt Roof Cement
ASTM D 2855	(1993) Making Solvent-Cemented Joints with Poly(Vinyl Chloride) (PVC) Pipe and Fittings
ASTM D 3139	(1989) Joints for Plastic Pressure Pipes Using Flexible Elastomeric Seals
ASTM D 3212	(1992) Joints for Drain and Sewer Plastic Pipes Using Flexible Elastomeric Seals
ASTM D 3311	(1992) Drain, Waste, and Vent (DWV) Plastic Fittings Patterns
ASTM D 4060	(1990) Abrasion Resistance of Organic Coatings by the Taber Abraser
ASTM E 96	(1993) Water Vapor Transmission of Materials

ASTM F 409	(1991a) Thermoplastic Accessible and Replaceable Plastic Tube and Tubular Fittings
ASTM F 437	(1993) Threaded Chlorinated Poly(Vinyl Chloride) (CPVC) Plastic Pipe Fittings, Schedule 80
ASTM F 438	(1993) Socket-Type Chlorinated Poly(Vinyl Chloride) (CPVC) Plastic Pipe Fittings, Schedule 40
ASTM F 439	(1993a) Socket-Type Chlorinated Poly(Vinyl Chloride) (CPVC) Plastic Pipe Fittings, Schedule 80
ASTM F 441	(1993) Chlorinated Poly(Vinyl Chloride) (CPVC) Plastic Pipe, Schedules 40 and 80
ASTM F 442	(1993) Chlorinated Poly(Vinyl Chloride) (CPVC) Plastic Pipe (SDR-PR)
ASTM F 477	(1993) Elastomeric Seals (Gaskets) for Joining Plastic Pipe
ASTM F 493	(1993a) Solvent Cements for Chlorinated Poly(Vinyl Chloride) (CPVC) Plastic Pipe and Fittings
ASTM F 891	(1991) Coextruded Poly(Vinyl Chloride (PVC) Plastic Pipe with a Cellular Core
ASTM F 1290	(1990) Electrofusion Joining Polyolefin Pipe and Fittings

AMERICAN SOCIETY OF HEATING, REFRIGERATING AND AIR-CONDITIONING ENGINEERS (ASHRAE)

ASHRAE 90.1	(1989; 90.1b; 90.1c; 90.1d; 90.1e; 90.1g; 90.1i-o) Energy Efficient Design of New Buildings Except Low-Rise Residential Buildings

AMERICAN SOCIETY OF MECHANICAL ENGINEERS (ASME)

ASME A112.1.2	(1991) Air Gaps in Plumbing Systems
ASME A112.6.1M	(1988) Supports for Off-the-Floor Plumbing Fixtures for Public Use
ASME A112.18.1M	(1989) Plumbing Fixture Fittings
ASME A112.19.2M	(1990) Vitreous China Plumbing Fixtures
ASME A112.21.1M	(1991) Floor Drains
ASME A112.36.2M	(1991) Cleanouts
ASME B1.20.1	(1983; R 1992) Pipe Threads, General Purpose (Inch)
ASME B16.3	(1992) Malleable Iron Threaded Fittings, Classes 150 and 300
ASME B16.4	(1992) Cast Iron Threaded Fittings Class 125 and 250
ASME B16.5	(1988; Errata; B16.5a) Pipe Flanges and Flanged Fittings
ASME B16.12	(1991) Cast Iron Threaded Drainage Fittings

ASME B16.15	(1985) Cast Bronze Threaded Fittings Classes 125 and 250
ASME B16.18	(1984) Cast Copper Alloy Solder Joint Pressure Fittings
ASME B16.21	(1992) Nonmetallic Flat Gaskets for Pipe Flanges
ASME B16.22	(1989) Wrought Copper and Copper Alloy Solder Joint Pressure Fittings
ASME B16.24	(1991; Errata) Cast Copper Alloy Pipe Flanges, Class 150, 300, 400, 600, 900, 1500 and 2500, and Flanged Fittings, Class 150 and 300
ASME B16.39	(1986) Malleable Iron Threaded Pipe Unions Classes 150, 250, and 300
ASME B31.1	(1992; B31.1a; B31.1b) Power Piping
ASME B31.5	(1992; B31.5a) Refrigeration Piping
ASME B40.1	(1991) Gauges - Pressure Indicating Dial Type - Elastic Element
ASME BPV VIII Div 1	(1992; Addenda Dec 1992, Dec 1993) Boiler and Pressure Vessel Code; Section VIII, Pressure Vessels Division 1 - Basic Coverage
ASME BPV IX	(1992; Addenda Dec 1992, Dec 1993) Boiler and Pressure Vessel Code; Section IX, Welding and Brazing Qualifications
ASME CSD-1	(1992; CSD-1a) Controls and Safety Devices for Automatically Fired Boilers

AMERICAN SOCIETY OF SANITARY ENGINEERING (ASSE)

ASSE 1001	(1988) Pipe Applied Atmospheric Type Vacuum Breakers
ASSE 1005	(1986) Water Heater Drain Valves - 3/4-Inch Iron Pipe Size
ASSE 1011	(1981) Hose Connection Vacuum Breakers
ASSE 1012	(1978) Backflow Preventers with Intermediate Atmospheric Vent
ASSE 1013	(1988) Reduced Pressure Principle Backflow Preventers
ASSE 1037	(1990) Pressurized Flushing Devices (Flushometers) for Plumbing Fixtures/F

AMERICAN WATER WORKS ASSOCIATION (AWWA)

AWWA-01	(1992) Standard Methods for the Examination of Water and Wastewater
AWWA B300	(1992) Hypochlorites
AWWA B301	(1992) Liquid Chlorine
AWWA C105	(1988) Polyethylene encasement for Ductile Iorn Piping for Water and Other Liquids

AWWA C203	(1991) Coal-Tar Protective Coatings and Linings for Steel Water Pipelines - Enamel and Tape - Hot-Applied
AWWA C606	(1987) Grooved and Shouldered Joints
AWWA M20	(1973) Manual: Water Chlorination Principles and Practices

AMERICAN WELDING SOCIETY (AWS)

AWS A5.8	(1992) Filler Metals for Brazing and Braze Welding
AWS B2.2	(1991) Brazing Procedure and Performance Qualification

CAST IRON SOIL PIPE INSTITUTE (CISPI)

CISPI Std 301	(1990) Hubless Cast Iron Soil Pipe and Fittings for Sanitary and Storm Drain, Waste, and Vent Piping Applications
CISPI Std HSN	(1985) Neoprene Rubber Gaskets for Hub and Spigot Cast Iron Soil Pipe and Fittings

CODE OF FEDERAL REGULATIONS (CFR)

10 CFR 430	Energy Conservation Program for Consumer Products
21 CFR 175	Indirect Food Additives: Adhesives and Components of Coatings

COMMERCIAL ITEM DESCRIPTIONS (CID)

CID A-A-238	(Rev B) Seat, Water Closet

COPPER DEVELOPMENT ASSOCIATION (CDA)

CDA 404/O-RR	(1992) Copper Tube for Plumbing, Heating, Air Conditioning and Refrigeration

COUNCIL OF AMERICAN BUILDING OFFICIALS (CABO)

CABO A117.1	(1992; Errata Jun 1993) American National Standard for Accessible and Usable buildings and Facilities

FEDERAL SPECIFICATIONS (FS)

FS QQ-B-654	(Rev A; Am 1; Notice 1) Brazing Alloys, Silver
FS TT-P-1536	(Rev A) Plumbing Fixture Setting Compound
FS WW-C-440	(Rev B; Am 2) Clamps, Hose, Low-Pressure)
FS WW-P-541/GEN	(Rev E; Am 1) Plumbing Fixtures
FS WW-P-541/4	(Rev B; Am 1) Plumbing Fixtures (Lavatories)
FS WW-P-541/5	(Rev B; Am 1) Plumbing Fixtures (Sinks, Kitchen, Service, and Laundry Trays)
FS WW-U-516	(Rev B; Notice 1) Unions, Brass or Bronze, Threaded Pipe Connections and Solder-Joint Tube Connections
FS WW-V-35	(Rev C) Valve, Ball

FOUNDATION FOR CROSS-CONNECTION CONTROL AND HYDRAULIC RESEARCH FCCHR)

FCCHR-01	(1988) Manual of Cross-Connection Control

MANUFACTURERS STANDARDIZATION SOCIETY OF THE VALVE AND FITTINGS INDUSTRY (MSS)

MSS SP-25	(1993) Standard Marking System for Valves, Fittings, Flanges and Unions
MSS SP-44	(1991) Steel Pipe Line Flanges
MSS SP-58	(1993) Pipe Hangers and Supports - Materials, Design and Manufacture
MSS SP-69	(1991) Pipe Hangers and Supports - Selection and Application
MSS SP-70	(1990) Cast Iron Gate Valves, Flanged and Threaded Ends
MSS SP-72	(1992) Ball Valves with Flanged or Butt-welding Ends for General Service
MSS SP-73	(1991) Brazing Joints for Copper and Copper Alloy Pressure Fittings
MSS SP-80	(1987) Bronze Gate, Globe, Angle and Check Valves
MSS SP-83	(1987) Steel Pipe Unions Socket-Welding and Threaded
MSS SP-84	(1990) Valves - Socket Welding and Threaded Ends

NATIONAL ASSOCIATION OF PLUMBING-HEATING-COOLING CONTRACTORS NAPHCC)

NAPHCC-01	(1993) National Standard Plumbing Code (Non-Illustrated Edition)
NAPHCC-02	(1993) National Standard Plumbing Code Illustrated Edition

NATIONAL ELECTRICAL MANUFACTURERS ASSOCIATION (NEMA)

NEMA 250	(1991) Enclosures for Electrical Equipment (1000 Volts Maximum)

NATIONAL FIRE PROTECTION ASSOCIATION (NFPA)

NFPA 90A	(1993) Installation of Air Conditioning and Ventilating Systems

NSF INTERNATIONAL (NSF)

NSF Std 14	(1965; Rev Nov 1990) Plastics Piping Components and Related Materials

PLASTIC PIPE AND FITTINGS ASSOCIATION (PPFA)

PPFA-01	(1991) Plastic Pipe in Fire Resistive Construction

PLUMBING AND DRAINAGE INSTITUTE (PDI)

PDI WH 201	(1992) Water Hammer Arresters

STEEL STRUCTURES PAINTING COUNCIL (SSPC)

SSPC SP 5 (1991) White Metal Blast Cleaning

UNDERWRITERS LABORATORIES (UL)

UL 174 (1989; Rev thru Jan 1991) Household Electric Storage-Tank Water Heaters

1.2 STANDARD PRODUCTS

Specified materials and equipment shall be standard products of a manufacturer regularly engaged in the manufacture of such products. Specified equipment shall essentially duplicate equipment that has performed satisfactorily at least two years prior to bid opening.

1.3 PERFORMANCE REQUIREMENTS

1.3.1 Welding

Piping shall be welded in accordance with qualified procedures using performance-qualified welders and welding operators. Procedures and welders shall be qualified in accordance with ASME BPV IX. Welding procedures qualified by others, and welders and welding operators qualified by another employer, may be accepted as permitted by ASME B31.1. The Contracting Officer shall be notified 24 hours in advance of tests, and the tests shall be performed at the work site if practicable. Welders or welding operators shall apply their assigned symbols near each weld they make as a permanent record. Structural members shall be welded in accordance with Section 05055 WELDING, STRUCTURAL.

1.4 ELECTRICAL WORK

Motors, motor controllers and motor efficiencies shall conform to the requirements of Section 16415 ELECTRICAL WORK, INTERIOR. Electrical motor-driven equipment specified herein shall be provided complete with motors. Equipment shall be rated at 60 Hz, single phase, ac unless otherwise indicated. Where a motor controller is not provided in a motor-control center on the electrical drawings, a motor controller shall be as indicated. Motor controllers shall be provided complete with properly sized thermal-overload protection in each ungrounded conductor, auxiliary contact, and other equipment, at the specified capacity, and including an allowable service factor.

1.5 SUBMITTALS

The following shall be submitted in accordance with Section 01300 SUBMITTAL DESCRIPTIONS:

SD-01 Data

Welding.

A copy of qualified procedures and a list of names and identification symbols of qualified welders and welding operators.

Vibration-Absorbing Features.

Details of vibration-absorbing features, including arrangement, foundation plan, dimensions and specifications.

SD-04 Drawings

Plumbing System.

Detail drawings consisting of illustrations, schedules, performance charts, instructions, brochures, diagrams, and other information to illustrate the requirements and operations of each system. Detail drawings for the complete plumbing system including piping layouts and locations of

connections; dimensions for roughing-in, foundation, and support points; schematic diagrams and wiring diagrams or connection and interconnection diagrams. Detail drawings shall indicate clearances required for maintenance and operation. Where piping and equipment are to be supported other than as indicated, details shall include loadings and proposed support methods. Mechanical drawing plans, elevations, views, and details, shall be drawn to scale.

Electrical Schematics.

Complete electrical schematic lineless or full line interconnection and connection diagram for each piece of mechanical equipment having more than one automatic or manual electrical control device.

SD-06 Instructions

Plumbing System.

Diagrams, instructions, and other sheets proposed for posting. Manufacturer's recommendations for the installation of bell and spigot and hubless joints for cast iron soil pipe.

SD-09 Reports

Tests, Flushing and Sterilization.

Test reports in booklet form showing all field tests performed to adjust each component and all field tests performed to prove compliance with the specified performance criteria, completion and testing of the installed system. Each test report shall indicate the final position of controls.

SD-13 Certificates

Materials and Equipment.

Where materials or equipment are specified to comply with requirements of AGA, or ASME, proof of such compliance. The label or listing of the specified agency will be acceptable evidence. In lieu of the label or listing, a written certificate may be submitted from an approved, nationally recognized testing organization equipped to perform such services, stating that the items have been tested and conform to the requirements and testing methods of the specified agency. Where equipment is specified to conform to requirements of the ASME Boiler and Pressure Vessel Code, the design, fabrication, and installation shall conform to the code.

Bolts.

Written certification by the bolt manufacturer that the bolts furnished comply with the specified requirements. The certification shall include illustrations of product-required markings, the date of manufacture, and the number of each type of bolt to be furnished based on this certification.

SD-19 Operation and Maintenance Manuals

Plumbing System.

Six copies of the operation manual outlining the step-by-step procedures required for system startup, operation and shutdown. The manual shall include the manufacturer's name, model number, service manual, parts list, and brief description of all equipment and their basic operating features. Six copies of the maintenance manual listing routine maintenance procedures, possible breakdowns and repairs. The manual shall include piping and equipment layout and simplified wiring and control diagrams of the system as installed.

1.6 REGULATORY REQUIREMENTS

1.6.1 Plumbing

Plumbing work shall be in accordance with NAPHCC-01, unless otherwise stated and installed in accordance with NAPHCC-02.

1.7 PROJECT/SITE CONDITIONS

The Contractor shall become familiar with details of the work, verify dimensions in the field, and advise the Contracting Officer of any discrepancy before performing any work.

PART 2 PRODUCTS

2.1 MATERIALS

Materials for various services shall be in accordance with TABLES I and II. Pipe schedules shall be selected based on service requirements. Pipe fittings shall be compatible with the applicable pipe materials. Plastic pipe, fittings, and solvent cement shall meet NSF Std 14 and shall be NSF listed for the service intended. Plastic pipe, fittings, and solvent cement used for potable hot and cold water service shall bear the NSF seal "NSF-PW." Polypropylene pipe and fittings shall conform to dimensional requirements of Schedule 40, Iron Pipe size. Pipe threads (except dry seal) shall conform to ASME B1.20.1. Grooved pipe couplings and fittings shall be from the same manufacturer. Material or equipment containing lead shall not be used in any potable water system. Hubless cast-iron soil pipe shall not be installed under concrete floor slabs or in crawl spaces below kitchen floors. Plastic pipe shall not be installed under concrete floor slabs, or in air plenums. Plastic pipe shall not be installed in a pressure piping system in buildings greater than three stories including any basement levels.

2.1.1 Pipe Joint Materials

Joints and gasket materials shall conform to the following:

a. Coupling for Cast-Iron Pipe: ASTM A 74, AWWA C606.

b. Coupling for Steel Pipe: AWWA C606.

c. Flange Gaskets: Gaskets shall be made of non-asbestos material in accordance with ASME B16.21. Gaskets shall be flat, 1.6 mm (1/16 inch) thick, and contain Aramid fibers bonded with Styrene Butadiene Rubber (SBR) or Nitro Butadiene Rubber (NBR). Gaskets shall be the full face or self centering flat ring type. Gaskets used for hydrocarbon service shall be bonded with NBR.

d. Neoprene Gaskets for Hub and Cast-Iron Pipe and Fittings: CISPI Std HSN.

e. Brazing Material: Brazing material shall conform to AWS A5.8, BCuP-5.

f. Brazing Flux: Flux shall be in paste or liquid form appropriate for use with brazing material. Flux shall be as follows: lead-free; have a 100 percent flushable residue; contain slightly acidic reagents; contain potassium borides; and contain fluorides. Silver brazing materials shall be in accordance with FS QQ-B-654.

g. Solder Material: Solder metal shall conform to ASTM B 32 95-5 tin-antimony.

h. Solder Flux: Flux shall be liquid form, non-corrosive, and conform to ASTM B 813, Standard Test 1.

i. Polytetrafluorethylene (PTFE) Tape: PTFE Tape, for use with Threaded Metal or Plastic Pipe.

j. Rubber Gaskets for Cast-Iron Soil-Pipe and Fittings: ASTM C 564.

k. Flexible Elastomeric Seals: ASTM D 3139, ASTM D 3212 or ASTM F 477.

l. Plastic Solvent Cement for PVC Plastic Pipe: ASTM D 2564 and ASTM D 2855.

m. Plastic Solvent Cement for CPVC Plastic Pipe: ASTM F 493.

n. Flanged fittings including flanges, bolts, nuts, bolt patterns, etc. shall be in accordance with ASME B16.5 class 150 and shall have the manufacturer's trademark affixed in accordance with MSS SP-25. Flange material shall conform to ASTM A 105. Blind flange material shall conform to ASTM A 516 cold service and ASTM A 515 for hot service. Bolts shall be high strength or intermediate strength with material conforming to ASTM A 193.

2.1.2 Miscellaneous Materials

Miscellaneous materials shall conform to the following:

a. Water Hammer Arrester: PDI WH 201.

b. Copper, Sheet and Strip for Building Construction: ASTM B 370.

c. Asphalt Roof Cement: ASTM D 2822.

d. Hose Clamps: FS WW-C-440.

e. Supports for Off-The-Floor Plumbing Fixtures: ASME A112.6.1M.

f. Metallic Cleanouts: ASME A112.36.2M.

g. Plumbing Fixture Setting Compound: FS TT-P-1536, Type II.

h. Coal-Tar Protective Coatings and Linings for Steel Water Pipelines: AWWA C203.

i. Hypochlorites: AWWA B300.

j. Liquid Chlorine: AWWA B301.

k. Polyethylene Encasement for Ductile-Iron Piping: AWWA C105.

l. Gauges - Pressure and Vacuum Indicating Dial Type - Elastic Element: ASME B40.1.

m. Thermometers: ANSI SAMA Z236.1 .

2.1.3 Pipe Insulation Material

Insulation shall be as specified in Section 15250 THERMAL INSULATION FOR MECHANICAL SYSTEMS.

2.2 PIPE HANGERS, INSERTS, AND SUPPORTS

Pipe hangers, inserts, and supports shall conform to MSS SP-58 and MSS SP-69.

2.3 VALVES

Valves shall be provided on supplies to equipment and fixtures. Valves 65 mm (2-1/2 inches) and smaller shall be bronze with threaded bodies for pipe and solder-type connections for tubing. Valves 80 mm (3 inches) and larger shall have flanged iron bodies and bronze trim. Pressure ratings shall be based upon the application. Valves shall conform to the following standards:

Description	Standard
Cast-Iron Gate Valves, Flanged and Threaded Ends	MSS SP-70
Ball Valves with Flanged Butt-Welding Ends for General Service	MSS SP-72
Ball Valves	FS WW-V-35
Bronze Gate, Globe, Angle, and Check Valves	MSS SP-80
Vacuum Relief Valves	ASSE 1001
Water Heater Drain Valves	ASSE 1005
Temperature and Pressure Relief Valves for Hot Water Supply Systems	ANSI Z21.22

2.3.1 Wall Faucets

Wall faucets with vacuum-breaker backflow preventer shall be brass with 20 mm (3/4 inch) male inlet threads, hexagon shoulder, and 20 mm (3/4 inch) hose connection. Faucet handle shall be securely attached to stem.

2.3.2 Wall Hydrants

Wall hydrants with vacuum-breaker backflow preventer shall have a nickel-brass or nickel-bronze wall plate or flange with nozzle and detachable key handle. A brass or bronze operating rod shall be provided within a galvanized iron casing of sufficient length to extend through the wall so that the valve is inside the building, and the portion of the hydrant between the outlet and valve is self-draining. A brass or bronze valve with coupling and union elbow having metal-to-metal seat shall be provided. Valve rod and seat washer shall be removable through the face of the hydrant. The hydrant shall have 20 mm (3/4 inch) exposed hose thread on spout and 20 mm (3/4 inch) male pipe thread on inlet.

2.3.3 Relief Valves

Water heaters shall have a combination pressure and temperature (P&T) relief valve. The pressure relief element of a P&T relief valve shall have adequate capacity to prevent excessive pressure buildup in the system when the system is operating at the maximum rate of heat input. The temperature element of a P&T relief valve shall have a relieving capacity which is at least equal to the total input of the heaters when operating at their maximum capacity. Relief valves shall be rated according to ANSI Z21.22. Relief valves for systems where the maximum rate of heat input is less than 59 kW (200,000 Btuh) shall have 20 mm (3/4 inch) minimum inlets, and 20 mm (3/4 inch) outlets. The discharge pipe from the relief valve shall be the size of the valve outlet.

2.4 FIXTURES

Fixtures shall be water conservation type, in accordance with NAPHCC-01. Fixtures for use by the physically handicapped shall be in accordance with CABO A117.1. Vitreous china, nonabsorbent, hard-burned, and vitrified throughout the body shall be provided. Porcelain enameled ware shall have specially selected, clear white, acid-resisting enamel coating evenly applied on surfaces. No fixture will be accepted that shows cracks, crazes, blisters, thin spots, or other flaws. Fixtures shall be equipped with appurtenances such as traps, faucets, stop valves, and drain fittings. Each fixture and piece of equipment requiring connections to the drainage system, except grease interceptors, shall be equipped with a trap. Brass expansion or toggle bolts capped with acorn nuts shall be provided for supports, and polished chromium-plated pipe, valves, and fittings shall be provided where exposed to view. Fixtures with the supply discharge below the rim shall be equipped with backflow preventers. Internal parts of

flush and/or flushometer valves, shower mixing valves, shower head face plates, pop-up stoppers of lavatory waste drains, and pop-up stoppers and overflow tees and shoes of bathtub waste drains may contain acetal resin, fluorocarbon, nylon, acrylonitrile-butadiene-styrene (ABS) or other plastic material, if the material has provided satisfactory service under actual commercial or industrial operating conditions for not less than 2 years. Plastic in contact with hot water shall be suitable for 82 degrees C (180 degrees F) water temperature. Plumbing fixtures shall generally be in accordance with FS WW-P-541/GEN, and shall be as indicated in paragraph PLUMBING FIXTURE SCHEDULE.

2.4.1 Lavatories

Vitreous china lavatories shall be provided with two integral molded lugs on the back-underside of the fixture and drilled for bolting to the wall in a manner similar to the hanger plate.

2.4.2 Automatic Flushing System

Flushing system shall consist of solenoid-activated flush valve with pushbutton to energize solenoid. Flushing devices shall be provided as described in paragraph FIXTURES AND FIXTURE TRIMMINGS.

2.5 BACKFLOW PREVENTERS

Reduced pressure principle assemblies, double check valve assemblies, atmospheric (nonpressure) type vacuum breakers, and pressure type vacuum breakers shall be tested, approved, and listed in accordance with FCCHR-01. Backflow preventers with intermediate atmospheric vent shall conform to ASSE 1012. Reduced pressure principle backflow preventers shall conform to ASSE 1013. Hose connection vacuum breakers shall conform to ASSE 1011. Pipe applied atmospheric type vacuum breakers shall conform to ASSE 1001. Air gaps in plumbing systems shall conform to ASME A112.1.2.

2.6 DRAINS

2.6.1 Floor and Shower Drains

Floor and shower drains shall consist of a galvanized body, integral seepage pan, and adjustable perforated or slotted chromium-plated bronze, nickel-bronze, or nickel-brass strainer, consisting of grate and threaded collar. Floor drains shall be cast iron except where metallic waterproofing membrane is installed. Drains shall be of double drainage pattern for embedding in the floor construction. The seepage pan shall have weep holes or channels for drainage to the drainpipe. The strainer shall be adjustable to floor thickness. A clamping device for attaching flashing or waterproofing membrane to the seepage pan without damaging the flashing or waterproofing membrane shall be provided when required. Drains shall be provided with threaded or caulked connection. In lieu of a caulked joint between the drain outlet and waste pipe, a neoprene rubber gasket conforming to ASTM C 564 may be installed, provided that the drain is specifically designed for the rubber gasket compression type joint. Floor and shower drains shall conform to ASME A112.21.1M.

2.6.1.1 Metallic Shower Pan Drains

Where metallic shower pan membrane is installed, polyethylene drain with corrosion-resistant screws securing the clamping device shall be provided. Polyethylene drains shall have fittings to adapt drain to waste piping. Polyethylene for floor drains shall conform to ASTM D 1248. Drains shall have separate cast-iron "P" trap, circular body, seepage pan, and strainer, unless otherwise indicated.

2.7 SHOWER PAN

Shower pan may be copper, or nonmetallic material.

2.7.1 Sheet Copper

Sheet copper shall be 4.9 kg per square meter (16 ounce) weight.

2.7.2 Plasticized Polyvinyl Chloride Shower Pan Material

Material shall be sheet form. The material shall be 1.016 mm (0.040 inch) minimum thickness of plasticized polyvinyl chloride or chlorinated polyethylene and shall have the following minimum properties:

a. ASTM D 638:

Ultimate Tensile Strength:	1.17 MPa (1690 psi)
Ultimate Elongation:	530 percent
100 Percent Modulus:	3.07 MPa (445 psi)

b. ASTM D 1004:

Tear Strength:	1.401 kilonewtons per meter (8 pounds per inch)

c. Other Properties:

Specific Gravity:	1.29
Xylene Solvent:	Weldable

2.8 TRAPS

Unless otherwise specified, traps shall be plastic per ASTM F 409 or copper-alloy adjustable tube type with slip joint inlet and swivel. Traps shall be without a cleanout. Tubes shall be copper alloy with walls not less than 0.813 mm (0.032 inch) thick within commercial tolerances, except on the outside of bends where the thickness may be reduced slightly in manufacture by usual commercial methods. Inlets shall have rubber washer and copper alloy nuts for slip joints above the discharge level. Swivel joints shall be below the discharge level and shall be of metal-to-metal or metal-to-plastic type as required for the application. Nuts shall have flats for wrench grip. Outlets shall have internal pipe thread, except that when required for the application, the outlets shall have sockets for solder-joint connections. The depth of the water seal shall be not less than 50 mm (2 inches). The interior diameter shall be not more than 3.2 mm (1/8 inch) over or under the nominal size, and interior surfaces shall be reasonably smooth throughout. A copper alloy "P" trap assembly consisting of an adjustable "P" trap and threaded trap wall nipple with cast brass wall flange shall be provided for lavatories. The assembly shall be a standard manufactured unit and may have a rubber-gasketed swivel joint.

2.9 WATER HEATER

Water heater types and capacities shall be as indicated. Each water heater shall have controls adjustable from 49 to 71 degrees C (120 to 160 degrees F). The thermal efficiencies and stand by heat losses shall conform to TABLE III as determined by ASHRAE 90.1 for each type of water heater specified. The only exception is that the storage capacity need not meet the standard loss requirement if the tank surface area is not insulated to R-12.5 and if a standing light is not used.

2.9.1 Electric Type

Electric type water heaters shall conform to UL 174 with dual heating elements. Each element shall be 4.5 kW. The elements shall be wired so that only one element can operate at a time.

2.10 WASHER SUPPLY BOX

Washer supply box shall consist of a 16-gage steel box with epoxy finish, 12 mm (1/2 inch) cold water and hot water angle valves for water supply, 50 mm (2 inches) drain connection, 20 amp, 120 volts ac, single-phase duplex electrical receptacle, and a 30 amp, 208 volts ac, three-phase dryer

electrical receptacle. Angle valves shall be provided with sweat connections and be supplied from top of box. Receptacles shall be located on opposite sides of box face.

PART 3 EXECUTION

3.1 GENERAL INSTALLATION REQUIREMENTS

The plumbing system shall be installed complete with necessary fixtures, fittings, traps, valves, and accessories. Water and drainage piping shall be extended 1.5 m (5 feet) outside the building, unless otherwise indicated. A ball valve and drain shall be installed on the water service line inside the building approximately 150 mm (6 inches) above the floor from point of entry. Piping shall be connected to the exterior service lines or capped or plugged if the exterior service is not in place. Sewer and water pipes shall be laid in separate trenches, except when otherwise shown. Exterior underground utilities shall be at least 300 mm (12 inches) below the average local frost depth or as indicated on the drawings. If trenches are closed or the pipes are otherwise covered before being connected to the service lines, the location of the end of each plumbing utility shall be marked with a stake or other acceptable means. Valves shall be installed with control no lower than the valve body.

3.1.1 Water Pipe, Fittings, and Connections

3.1.1.1 Utilities

The piping shall be extended to fixtures, outlets, and equipment. The hot-water and cold-water piping system shall be arranged and installed to permit draining. The supply line to each item of equipment or fixture, except faucets, flush valves, or other control valves which are supplied with integral stops, shall be equipped with a shutoff valve to enable isolation of the item for repair and maintenance without interfering with operation of other equipment or fixtures. Supply piping to fixtures, faucets, hydrants, shower heads, and flushing devices shall be anchored to prevent movement.

3.1.1.2 Cutting and Repairing

The work shall be carefully laid out in advance, and unnecessary cutting of construction shall be avoided. Damage to building, piping, wiring, or equipment as a result of cutting shall be repaired by mechanics skilled in the trade involved.

3.1.1.3 Protection of Fixtures, Materials, and Equipment

Pipe openings shall be closed with caps or plugs during installation. Fixtures and equipment shall be tightly covered and protected against dirt, water, chemicals, and mechanical injury. Upon completion of the work, the fixtures, materials, and equipment shall be thoroughly cleaned, adjusted, and operated. Safety guards shall be provided for exposed rotating equipment.

3.1.1.4 Mains, Branches, and Runouts

Piping shall be installed as indicated. Pipe shall be accurately cut and worked into place without springing or forcing. Structural portions of the building shall not be weakened. Aboveground piping shall run parallel with the lines of the building, unless otherwise indicated. Branch pipes from service lines may be taken from top, bottom, or side of main, using crossover fittings required by structural or installation conditions. Supply pipes, valves, and fittings shall be kept a sufficient distance from other work and other services to permit not less than 15 mm (1/2 inch) between finished covering on the different services. Bare and insulated water lines shall not bear directly against building structural elements so as to transmit sound to the structure or to prevent flexible movement of the lines. Water pipe shall not be buried in or under floors. Changes in pipe sizes shall be made with reducing fittings. Use of bushings will not be permitted except for use in situations in which standard factory

fabricated components are furnished to accommodate specific excepted installation practice. Change in direction shall be made with fittings, except that bending of pipe 100 mm (4 inches) and smaller will be permitted, provided a pipe bender is used and wide sweep bends are formed. The centerline radius of bends shall be not less than six diameters of the pipe. Bent pipe showing kinks, wrinkles, flattening, or other malformations will not be acceptable.

3.1.1.5 Pipe Drains

Pipe drains indicated shall consist of 20 mm (3/4 inch) hose bibb with renewable seat and ball valve ahead of hose bibb. At other low points, 20 mm (3/4 inch) brass plugs or caps shall be provided. Disconnection of the supply piping at the fixture is an acceptable drain.

3.1.1.6 Expansion and Contraction of Piping

Allowance shall be made throughout for expansion and contraction of water pipe. Each hot-water riser shall have expansion loops or other provisions such as offsets, changes in direction, etc., where indicated and/or required. Risers shall be securely anchored as required or where indicated to force expansion to loops. Branch connections from risers shall be made with ample swing or offset to avoid undue strain on fittings or short pipe lengths. Horizontal runs of pipe over 15 m (50 feet) in length shall be anchored to the wall or the supporting construction about midway on the run to force expansion, evenly divided, toward the ends. Sufficient flexibility shall be provided on branch runouts from mains and risers to provide for expansion and contraction of piping. Flexibility shall be provided by installing one or more turns in the line so that piping will spring enough to allow for expansion without straining.

3.1.1.7 Commercial-Type Water Hammer Arresters

Commercial-type water hammer arresters shall be provided on hot- and cold-water supplies and shall be located as generally indicated, with precise location and sizing to be in accordance with PDI WH 201. Water hammer arresters, where concealed, shall be accessible by means of access doors or removable panels. Commercial-type water hammer arresters shall conform to PDI WH 201. Vertical capped pipe columns will not be permitted.

3.1.2 Compressed Air Piping (Non-Oil Free)

Compressed air piping shall be installed as specified for water piping and suitable for 862 kPa (125 psig) working pressure. Compressed air piping shall have supply lines and discharge terminals legibly and permanently marked at both ends with the name of the system and the direction of flow.

3.1.3 Joints

Installation of pipe and fittings shall be made in accordance with the manufacturer's recommendations. Mitering of joints for elbows and notching of straight runs of pipe for tees will not be permitted. Joints shall be made up with fittings of compatible material and made for the specific purpose intended.

3.1.3.1 Threaded

Threaded joints shall have American Standard taper pipe threads conforming to ASME B1.20.1. Only male pipe threads shall be coated with graphite or with an approved graphite compound, or with an inert filler and oil, or shall have a polytetrafluorethylene tape applied.

3.1.3.3 Union and Flanged

Unions, flanges and mechanical couplings shall not be concealed in walls, ceilings, or partitions. Unions shall be used on pipe sizes 65 mm (2-1/2 inches) and smaller; flanges shall be used on pipe sizes 80 mm (3 inches) and larger.

3.1.3.4 Cast Iron Soil, Waste and Vent Pipe

Bell and spigot compression and hubless gasketed clamp joints for soil, waste and vent piping shall be installed per the manufacturer's recommendations.

3.1.3.5 Copper Tube and Pipe

The tube or fittings shall not be annealed when making connections. Connections shall be made with a multiflame torch.

a. Brazed. Brazed joints shall be made in conformance with AWS B2.2, MSS SP-73, and CDA 404/O-RR with flux and are acceptable for line sizes. Copper to copper joints shall include the use of copper-phosphorus or copper-phosphorus-silver brazing metal without flux. Brazing of dissimilar metals (copper to bronze or brass) shall include the use of flux with either a copper-phosphorus, copper-phosphorus-silver or a silver brazing filler metal.

b. Soldered. Soldered joints shall be made with flux and are only acceptable for lines 50 mm (2 inches) and smaller. Soldered joints shall conform to ASME B31.5 and CDA 404/O-RR.

c. Copper Tube Extracted Joint. An extracted mechanical joint may be made in copper tube. Joint shall be produced with an appropriate tool by drilling a pilot hole and drawing out the tube surface to form a collar having a minimum height of three times the thickness of the tube wall. To prevent the branch tube from being inserted beyond the depth of the extracted joint, dimpled depth stops shall be provided. Branch tube shall be notched for proper penetration into fitting to ensure a free flow joint. Extracted joints shall be brazed in accordance with NAPHCC-01 using B-Cup series filler metal in accordance with MSS SP-73. Soldered extracted joints will not be permitted.

3.1.3.6 Plastic Pipe

PVC and CPVC pipe shall have joints made with solvent cement elastomeric, threading, (threading of Schedule 80 Pipe is allowed only where required for disconnection and inspection; threading of Schedule 40 Pipe is not allowed), or mated flanged.

3.1.3.7 Other Joint Methods

3.1.4 Dissimilar Pipe Materials

Connections between ferrous and non-ferrous copper pipe shall be made with dielectric unions or flange waterways. Connecting joints between plastic and metallic pipe shall be made with transition fitting for the specific purpose.

3.1.5 Corrosion Protection for Buried Pipe and Fittings

3.1.5.1 Cast Iron and Ductile Iron

Pressure pipe shall have protective coating, a cathodic protection system, and joint bonding. Pipe, fittings, and joints shall have a protective coating. Joints and fittings shall be cleaned, coated with primer, and wrapped with tape. The pipe shall be cleaned, coated, and wrapped prior to pipe tightness testing. Joints and fittings shall be cleaned, coated, and wrapped after pipe tightness testing. Tape shall conform to AWWA C203 and shall be applied with a 50 percent overlap. Primer shall be as recommended by the tape manufacturer.

3.1.5.2 Steel

Steel pipe, joints, and fittings shall be cleaned, coated with primer, and wrapped with tape. Pipe shall be cleaned, coated, and wrapped prior to pipe tightness testing. Joints and fittings shall be cleaned, coated, and wrapped after pipe tightness testing. Tape shall conform to AWWA C203 and

shall be applied with a 50 percent overlap. Primer shall be as recommended by the tape manufacturer.

3.1.6 Pipe Sleeves and Flashing

Pipe sleeves shall be furnished and set in their proper and permanent location.

3.1.6.1 Sleeve Requirements

Pipes passing through concrete or masonry walls or concrete floors or roofs shall be provided with pipe sleeves fitted into place at the time of construction. Sleeves are not required for cast-iron soil pipe passing through concrete slab on grade, except where penetrating a membrane waterproof floor. A modular mechanical type sealing assembly may be installed in lieu of a waterproofing clamping flange and caulking and sealing of annular space between pipe and sleeve. The seals shall consist of interlocking synthetic rubber links shaped to continuously fill the annular space between the pipe and sleeve with corrosion-protected carbon steel bolts, nuts, and pressure plates. The links shall be loosely assembled with bolts to form a continuous rubber belt around the pipe with a pressure plate under each bolt head and each nut. After the seal assembly is properly positioned in the sleeve, tightening of the bolt shall cause the rubber sealing elements to expand and provide a watertight seal between the pipe and the sleeve. Each seal assembly shall be sized as recommended by the manufacturer to fit the pipe and sleeve involved. Sleeves shall not be installed in structural members, except where indicated or approved. Rectangular and square openings shall be as detailed. Each sleeve shall extend through its respective floor, or roof, and shall be cut flush with each surface, except for special circumstances. Pipe sleeves passing through floors in wet areas such as mechanical equipment rooms, lavatories, kitchens, and other plumbing fixture areas shall extend a minimum of 100 mm (4 inches) above the finished floor. Unless otherwise indicated, sleeves shall be of a size to provide a minimum of 6 mm (1/4 inch) clearance between bare pipe and inside of sleeve or between jacket over insulation and sleeves. Sleeves in bearing walls shall be steel pipe or cast-iron pipe. Sleeves for membrane waterproof floors shall be steel pipe, cast-iron pipe, or plastic pipe. Membrane clamping devices shall be provided on pipe sleeves for waterproof floors. Sleeves in nonbearing walls or ceilings may be steel pipe, cast-iron pipe, galvanized sheet metal with lock-type longitudinal seam, or moisture-resistant fiber or plastic. Plastic sleeves shall not be used in nonbearing fire walls, roofs, or floor/ceilings. Except as otherwise specified, the annular space between pipe and sleeve, or between jacket over insulation and sleeve, shall be sealed as indicated with sealants conforming to ASTM C 920 and with a primer, backstop material and surface preparation as specified in Section 07920 JOINT SEALING. Pipes passing through sleeves in concrete floors over crawl spaces shall be sealed as specified above. The annular space between pipe and sleeve or between jacket over insulation and sleeve shall not be sealed for interior walls which are not designated as fire rated. Sleeves through below-grade walls in contact with earth shall be recessed 15 mm (1/2 inch) from wall surfaces on both sides. Annular space between pipe and sleeve shall be filled with backing material and sealants in the joint between the pipe and masonry wall as specified above. Sealant selected for the earth side of the wall shall be compatible with dampproofing/waterproofing materials that are to be applied over the joint sealant.

3.1.6.2 Flashing Requirements

Pipes passing through roof or floor waterproofing membrane shall be installed through a 4.9 kg per square meter (16 ounce) copper flashing, each within an integral skirt or flange. Flashing shall be suitably formed, and the skirt or flange shall extend not less than 200 mm (8 inches) from the pipe and shall be set over the roof or floor membrane in a solid coating of bituminous cement. The flashing shall extend up the pipe a minimum of 250 mm. (10 inches.) For cleanouts, the flashing shall be turned down into the hub and caulked after placing the ferrule. Pipes passing through pitched roofs shall be flashed, using lead or copper

flashing, with an adjustable integral flange of adequate size to extend not less than 200 mm (8 inches) from the pipe in all directions and lapped into the roofing to provide a watertight seal. The annular space between the flashing and the bare pipe or between the flashing and the metal-jacket-covered insulation shall be sealed as indicated. Flashing for dry vents shall be turned down into the pipe to form a waterproof joint. Pipes, up to and including 250 mm (10 inches) in diameter, passing through roof or floor waterproofing membrane may be installed through a cast-iron sleeve with caulking recess, anchor lugs, flashing-clamp device, and pressure ring with brass bolts. Flashing shield shall be fitted into the sleeve clamping device. Pipes passing through wall waterproofing membrane shall be sleeved as described above. A waterproofing clamping flange shall be installed.

3.1.6.3 Waterproofing

Waterproofing at floor-mounted water closets shall be accomplished by forming a flashing guard from soft-tempered sheet copper. The center of the sheet shall be perforated and turned down approximately 40 mm (1-1/2 inches) to fit between the outside diameter of the drainpipe and the inside diameter of the cast-iron or steel pipe sleeve. The turned-down portion of the flashing guard shall be embedded in sealant to a depth of approximately 40 mm; (1-1/2 inches;) then the sealant shall be finished off flush to floor level between the flashing guard and drainpipe. The flashing guard of sheet copper shall extend not less than 200 mm (8 inches) from the drainpipe and shall be lapped between the floor membrane in a solid coating of bituminous cement. If cast-iron water closet floor flanges are used, the space between the pipe sleeve and drainpipe shall be sealed with sealant and the flashing guard shall be upturned approximately 40 mm (1-1/2 inches) to fit the outside diameter of the drainpipe and the inside diameter of the water closet floor flange. The upturned portion of the sheet fitted into the floor flange shall be sealed.

3.1.6.4 Optional Counterflashing

Instead of turning the flashing down into a dry vent pipe, or caulking and sealing the annular space between the pipe and flashing or metal-jacket-covered insulation and flashing, counterflashing may be accomplished by utilizing the following:

a. A standard roof coupling for threaded pipe up to 150 mm (6 inches) in diameter.

b. A tack-welded or banded-metal rain shield around the pipe.

3.1.6.5 Pipe Penetrations of Slab on Grade Floors

Where pipes, fixture drains, floor drains, cleanouts or similar items penetrate slab on grade floors, except at penetrations of floors with waterproofing membrane as specified in paragraphs Flashing Requirements and Waterproofing, a groove 6 to 13 mm (1/4 to 1/2 inch) wide by 6 to 10 mm (1/4 to 3/8 inch) deep shall be formed around the pipe, fitting or drain. The groove shall be filled with a sealant as specified in Section 07920 JOINT SEALING.

3.1.7 Fire Seal

Where pipes pass through fire walls, fire-partitions, fire-rated pipe chase walls or floors above grade, a fire seal shall be provided.

3.1.8 Supports

3.1.8.1 General

Hangers used to support piping 50 mm (2 inches) and larger shall be fabricated to permit adequate adjustment after erection while still supporting the load. Pipe guides and anchors shall be installed to keep pipes in accurate alignment, to direct the expansion movement, and to prevent buckling, swaying, and undue strain. Piping subjected to vertical movement when operating temperatures exceed ambient temperatures shall be

supported by variable spring hangers and supports or by constant support hangers. In the support of multiple pipe runs on a common base member, a clip or clamp shall be used where each pipe crosses the base support member. Spacing of the base support members shall not exceed the hanger and support spacing required for an individual pipe in the multiple pipe run.

3.1.8.2 Pipe Supports and Structural Bracing, Seismic Requirements

Piping and attached valves shall be supported and braced to resist seismic loads as specified Section 13080 SEISMIC PROTECTION FOR MECHANICAL, ELECTRICAL EQUIPMENT. Structural steel required for reinforcement to properly support piping, headers, and equipment, but not shown, shall be provided.

3.1.8.3 Pipe Hangers, Inserts, and Supports

Installation of pipe hangers, inserts and supports shall conform to MSS SP-58 and MSS SP-69, except as modified herein.

a. Types 5, 12, and 26 shall not be used.

b. Type 3 shall not be used on insulated pipe.

c. Type 18 inserts shall be secured to concrete forms before concrete is placed. Continuous inserts which allow more adjustment may be used if they otherwise meet the requirements for type 18 inserts.

d. Type 19 and 23 C-clamps shall be torqued per MSS SP-69 and shall have both locknuts and retaining devices furnished by the manufacturer. Field-fabricated C-clamp bodies or retaining devices are not acceptable.

e. Type 20 attachments used on angles and channels shall be furnished with an added malleable-iron heel plate or adapter.

f. Type 24 may be used only on trapeze hanger systems or on fabricated frames.

g. Type 39 saddles shall be used on insulated pipe 100 mm (4 inches) and larger when the temperature of the medium is 15 degrees C (60 degrees F) or higher. Type 39 saddles shall be welded to the pipe.

h. Type 40 shields shall:

(1) be used on insulated pipe less than 100 mm (4 inches).

(2) be used on insulated pipe 100 mm (4 inches) and larger when the temperature of the medium is 15 degrees C (60 degrees F) or less.

(3) have a high density insert for pipe 50 mm (2 inches) and larger and for smaller pipe sizes when the insulation is suspected of being visibly compressed, or distorted at or near the shield/insulation interface. High density inserts shall have a density of 128 kg per cubic meter (8 pcf) or greater.

i. Horizontal pipe supports shall be spaced as specified in MSS SP-69 and a support shall be installed not over 300 mm (1 foot) from the pipe fitting joint at each change in direction of the piping. Pipe supports shall be spaced not over 1.5 m (5 feet) apart at valves. Operating temperatures in determining hanger spacing for PVC or CPVC pipe shall be 49 degrees C (120 degrees F) for PVC and 82 degrees C (180 degrees F) for CPVC. Horizontal pipe runs shall include allowances for expansion and contraction.

j. Vertical pipe shall be supported at each floor, except at slab-on-grade, at intervals of not more than 4.5 m (15 feet) nor more than 2 m (8 feet) from end of risers, and at vent terminations. Vertical pipe risers shall include allowances for expansion and contraction.

k. Type 40 shields used on insulated pipe shall have high density inserts with a density of 128 kg per cubic meter (8 pcf) or greater.

l. Type 35 guides using steel, reinforced polytetrafluorethylene (PTFE) or graphite slides shall be provided to allow longitudinal pipe movement. Slide materials shall be suitable for the system operating temperatures, atmospheric conditions, and bearing loads encountered. Lateral restraints shall be provided as needed. Where steel slides do not require provisions for lateral restraint the following may be used:

(1) On pipe 100 mm (4 inches) and larger when the temperature of the medium is 15 degrees C (60 degrees F) or higher, a Type 39 saddle, welded to the pipe, may freely rest on a steel plate.

(2) On pipe less than 100 mm (4 inches) a Type 40 shield, attached to the pipe or insulation, may freely rest on a steel plate.

(3) On pipe 100 mm (4 inches) and larger carrying medium less that 15 degrees C (60 degrees F) a Type 40 shield, attached to the pipe or insulation, may freely rest on a steel plate.

m. Pipe hangers on horizontal insulated pipe shall be the size of the outside diameter of the insulation. The insulation shall be continuous through the hanger on all pipe sizes and applications.

n. Where there are high system temperatures and welding to piping is not desirable, the type 35 guide shall include a pipe cradle, welded to the guide structure and strapped securely to the pipe. The pipe shall be separated from the slide material by at least 100 mm (4 inches) or by an amount adequate for the insulation, whichever is greater.

o. Hangers and supports for plastic pipe shall not compress, distort, cut or abrade the piping, and shall allow free movement of pipe except where otherwise required in the control of expansion/contraction.

3.1.9 Welded Installation

Plumbing pipe weldments shall be as indicated. Changes in direction of piping shall be made with welding fittings only; mitering or notching pipe to form elbows and tees or other similar type construction will not be permitted. Branch connection may be made with either welding tees or forged branch outlet fittings. Branch outlet fittings shall be forged, flared for improvement of flow where attached to the run, and reinforced against external strains. Beveling, alignment, heat treatment, and inspection of weld shall conform to ASME B31.1. Weld defects shall be removed and repairs made to the weld, or the weld joints shall be entirely removed and rewelded. After filler metal has been removed from its original package, it shall be protected or stored so that its characteristics or welding properties are not affected. Electrodes that have been wetted or that have lost any of their coating shall not be used.

3.1.10 Pipe Cleanouts

Pipe cleanouts shall be the same size as the pipe except that cleanout plugs larger than 100 mm (4 inches) will not be required. A cleanout installed in connection with cast-iron soil pipe shall consist of a long-sweep 1/4 bend or one or two 1/8 bends extended to the place shown. An extra-heavy cast-brass or cast-iron ferrule with countersunk cast-brass head screw plug shall be caulked into the hub of the fitting and shall be flush with the floor. Cleanouts in connection with other pipe, where indicated, shall be T-pattern, 90-degree branch drainage fittings with cast-brass screw plugs, except plastic plugs shall be installed in plastic pipe. Plugs shall be the same size as the pipe up to and including 100 mm (4 inches). Cleanouts on pipe concealed in partitions shall be provided with chromium plated bronze, nickel bronze, nickel brass or stainless steel flush type access cover plates. Round access covers shall be provided and secured to plugs with securing screw. Square access covers may be provided with matching frames, anchoring lugs and cover screws. Cleanouts in

finished walls shall have access covers and frames installed flush with the finished wall. Cleanouts installed in finished floors subject to foot traffic shall be provided with a chrome-plated cast brass, nickel brass, or nickel bronze cover secured to the plug or cover frame and set flush with the finished floor. Heads of fastening screws shall not project above the cover surface. Where cleanouts are provided with adjustable heads, the heads shall be cast iron.

3.2 WATER HEATERS AND HOT WATER STORAGE TANKS

3.2.1 Relief Valves

No valves shall be installed between a relief valve and its water heater or storage tank. The P&T relief valve shall be installed where the valve actuator comes in contact with the hottest water in the heater. Whenever possible, the relief valve shall be installed directly in a tapping in the tank or heater; otherwise, the P&T valve shall be installed in the hot-water outlet piping. A vacuum relief valve shall be provided on the cold water supply line to the hot-water storage tank or water heater and mounted above and within 150 mm (6 inches) above the top of the tank or water heater.

3.2.2 Connections to Water Heaters

Connections of metallic pipe to water heaters shall be made with dielectric unions or flanges.

3.3 FIXTURES AND FIXTURE TRIMMINGS

Angle stops, straight stops, stops integral with the faucets, or concealed type of lock-shield, and loose-key pattern stops for supplies with threaded, sweat or solvent weld inlets shall be furnished and installed with fixtures. Where connections between copper tubing and faucets are made by rubber compression fittings, a beading tool shall be used to mechanically deform the tubing above the compression fitting. Exposed traps and supply pipes for fixtures and equipment shall be connected to the rough piping systems at the wall, unless otherwise specified under the item. Floor and wall escutcheons shall be as specified. Plumbing fixtures and accessories shall be installed within the space shown.

3.3.1 Fixture Connections

Where space limitations prohibit standard fittings in conjunction with the cast-iron floor flange, special short-radius fittings shall be provided. Connections between earthenware fixtures and flanges on soil pipe shall be made gastight and watertight with a closet-setting compound or neoprene gasket and seal. Use of natural rubber gaskets or putty will not be permitted. Fixtures with outlet flanges shall be set the proper distance from floor or wall to make a first-class joint with the closet-setting compound or gasket and fixture used.

3.3.2 Flushometer Valves

Flushometer valves shall be secured to prevent movement by anchoring the long finished top spud connecting tube to wall adjacent to valve with approved metal bracket.

3.3.3 Height of Fixture Rims Above Floor

Lavatories shall be mounted with rim 775 mm (31 inches) above finished floor. Wall-hung drinking fountains and water coolers shall be installed with rim 1020 mm (42 inches) above floor. Wall-hung service sinks shall be mounted with rim 700 mm (28 inches) above the floor. Installation of fixtures for use by the physically handicapped shall be in accordance with CABO A117.1.

3.3.4 Shower Bath Outfits

The area around the water supply piping to the mixing valves and behind the escutcheon plate shall be made watertight by caulking or gasketing.

3.3.5 Fixture Supports

Fixture supports for off-the-floor lavatories, urinals, water closets, and other fixtures of similar size, design, and use, shall be of the chair-carrier type. The carrier shall provide the necessary means of mounting the fixture, with a foot or feet to anchor the assembly to the floor slab. Adjustability shall be provided to locate the fixture at the desired height and in proper relation to the wall. Support plates, in lieu of chair carrier, shall be fastened to the wall structure only where it is not possible to anchor a floor-mounted chair carrier to the floor slab.

3.3.5.1 Support for Solid Masonry Construction

Chair carrier shall be anchored to the floor slab. Where a floor-anchored chair carrier cannot be used, a suitable wall plate shall be imbedded in the masonry wall.

3.3.5.2 Support for Cellular-Masonry Wall Construction

Chair carrier shall be anchored to floor slab. Where a floor-anchored chair carrier cannot be used, a suitable wall plate shall be fastened to the cellular wall using through bolts and a back-up plate.

3.3.5.5 Wall-Mounted Water Closet Gaskets

Where wall-mounted water closets are provided, reinforced wax, treated felt, or neoprene gaskets shall be provided. The type of gasket furnished shall be as recommended by the chair-carrier manufacturer.

3.3.6 Backflow Prevention Devices

Plumbing fixtures, equipment, and pipe connections shall not cross connect or interconnect between a potable water supply and any source of nonpotable water. The backflow prevention device shall be installed where indicated and located so that no part of the device will be submerged. Access shall be provided for maintenance and testing. Each device shall be a standard commercial unit.

3.3.7 Access Panels

Access panels shall be provided for concealed valves and controls, or any item requiring inspection or maintenance. Access panels shall be of sufficient size and located so that the concealed items may be serviced, maintained, or replaced. Access panels shall be as specified in Section 05500 MISCELLANEOUS METAL.

3.3.8 Traps

Each trap shall be placed as near the fixture as possible, and no fixture shall be double-trapped. Traps installed on cast-iron soil pipe shall be cast iron. Traps installed on steel pipe or copper tubing shall be recess-drainage pattern, or brass-tube type. Traps installed on plastic pipe may be plastic conforming to ASTM D 3311. Traps for acid-resisting waste shall be of the same material as the pipe.

3.3.9 Shower Pans

Before installing shower pan, subfloor shall be free of projections such as nail heads or rough edges of aggregate. Drain shall be a bolt-down, clamping-ring type with weepholes, installed so the lip of the subdrain is flush with subfloor.

3.3.9.1 General

The floor of each individual shower, the shower-area portion of combination shower and drying room, and the entire shower and drying room where the two are not separated by curb or partition, shall be made watertight with a shower pan fabricated in place. The shower pan material shall be cut to size and shape of the area indicated, in one piece to the maximum extent practicable, allowing a minimum of 150 mm (6 inches) for turnup on walls or partitions, and shall be folded over the curb with an approximate return of 1/4 of curb height. The upstands shall be placed behind any wall or partition finish. Subflooring shall be smooth and clean, with nail heads driven flush with surface, and shall be sloped to drain. Shower pans shall be clamped to drains with the drain clamping ring.

3.3.9.2 Metal Shower Pans

When a shower pan of required size cannot be furnished in one piece, metal pieces shall be joined with a flatlock seam and soldered or burned. The corners shall be folded, not cut, and the corner seam shall be soldered or burned. Pans, including upstands, shall be coated on all surfaces with one brush coat of asphalt. Asphalt shall be applied evenly at not less than 1 liter per square meter. (1 gallon per 50 square feet.) A layer of felt covered with building paper shall be placed between shower pans and wood floors. The joining surfaces of metal pan and drain shall be given a brush coat of asphalt after the pan is connected to the drain.

3.4 IDENTIFICATION SYSTEMS

3.4.1 Identification Tags

Identification tags made of brass, engraved laminated plastic, or engraved anodized aluminum, indicating service and valve number shall be installed on valves, except those valves installed on supplies at plumbing fixtures. Tags shall be 35 mm (1-3/8 inch) minimum diameter, and marking shall be stamped or engraved. Indentations shall be black, for reading clarity. Tags shall be attached to valves with No. 12 AWG, copper wire, chrome-plated beaded chain, or plastic straps designed for that purpose.

3.4.2 Color Coding

Color coding for piping identification shall be as specified in Section 09900 PAINTING, GENERAL.

3.5 ESCUTCHEONS

Escutcheons shall be provided at finished surfaces where bare or insulated piping, exposed to view, passes through floors, walls, or ceilings, except in boiler, utility, or equipment rooms. Escutcheons shall be fastened securely to pipe or pipe covering and shall be satin-finish, corrosion-resisting steel, polished chromium-plated zinc alloy, or polished chromium-plated copper alloy. Escutcheons shall be either one-piece or split-pattern, held in place by internal spring tension or setscrew.

3.6 PAINTING

Painting of pipes, hangers, supports, and other iron work, either in concealed spaces or exposed spaces, is specified in Section 09900 PAINTING, GENERAL.

3.7 TESTS, FLUSHING, AND STERILIZATION

3.7.1 Plumbing System

The plumbing system shall be tested in accordance with NAPHCC-01.

3.7.1.1 Shower Pans

After installation of the pan and finished floor, the drain shall be temporarily plugged below the weep holes. The floor area shall be flooded

with water to a minimum depth of 25 mm (1 inch) for a period of 24 hours. Any drop in the water level during test, except for evaporation, will be reason for rejection, repair, and retest.

3.7.1.2 Compressed Air Piping (Nonoil-Free)

Piping systems shall be filled with oil-free dry air or gaseous nitrogen to 1.03 MPa (150 psig) and hold this pressure for 2 hours with no drop in pressure.

3.7.2 Defective Work

If inspection or test shows defects, such defective work or material shall be replaced or repaired as necessary and inspection and tests shall be repeated. Repairs to piping shall be made with new materials. Caulking of screwed joints or holes will not be permitted.

3.7.3 System Flushing

After tests are completed, potable water piping shall be flushed. In general, sufficient water shall be used to produce a minimum water velocity of 0.762 meters per second (2.5 feet per second) through piping being flushed. Flushing shall be continued until discharge water shows no discoloration. System shall be drained at low points. Strainer screens shall be removed, cleaned, and replaced in line. After flushing and cleaning, systems shall be prepared for service by immediately filling water piping with clean, fresh potable water. Any stoppage, discoloration, or other damage to the finish, furnishings, or parts of the building due to the Contractor's failure to properly clean the piping system shall be repaired by the Contractor. When the work is complete, the hot-water system shall be adjusted for uniform circulation. Flushing devices and automatic control systems shall be adjusted for proper operation.

3.7.4 Operational Test

Upon completion of and prior to acceptance of the installation, the Contractor shall subject the plumbing system to operating tests to demonstrate satisfactory functional and operational efficiency. Such operating tests shall cover a period of not less than 8 hours for each system and shall include the following information in a report with conclusion as to the adequacy of the system:

a. Time, date, and duration of test.

b. Water pressures at the most remote and the highest fixtures.

c. Operation of each fixture and fixture trim.

d. Operation of each valve, hydrant, and faucet.

e. Temperature of each domestic hot-water supply.

f. Operation of each floor drain by flooding with water.

g. Operation of each vacuum breaker and backflow preventer.

h. Compressed air readings at each compressor and at each outlet.

Each indicating instrument shall be read at 1/2 hour intervals. The report of the test shall be submitted in quadruplicate. The Contractor shall furnish instruments, equipment, and personnel required for the tests; the Government will furnish the necessary water and electricity.

3.7.5 Sterilization

After pressure tests have been made, the entire domestic hot- and cold-water distribution system shall be sterilized. System shall be thoroughly flushed with water of sufficient velocity until all entrained dirt and other foreign material have been removed, before introducing

chlorinating material. The chlorinating material shall be hypochlorites or liquid chlorine. Water chlorination procedure shall be in accordance with AWWA M20. The chlorinating material shall be fed into the water piping system at a constant rate at a concentration of at least 50 parts per million (ppm). A properly adjusted hypochlorite solution injected into the main with a hypochlorinator, or liquid chlorine injected into the main through a solution-feed chlorinator and booster pump, shall be used. The chlorine residual shall be checked at intervals to ensure that the proper level is maintained. Chlorine application shall continue until the entire main is filled. The water shall remain in the system for a minimum of 24 hours. Each valve in the system being sterilized shall be opened and closed several times during the contact period to ensure its proper disinfection. Following the 24-hour period, no less than 25 ppm chlorine residual shall remain in the system. Water tanks shall be disinfected by the addition of chlorine directly to the filling water. Following a 6 hour period, no less than 50 ppm chlorine residual shall remain in the tank. The system including the tanks shall then be flushed with clean water until the residual chlorine is reduced to less than one part per million. During the flushing period each valve and faucet shall be opened and closed several times. From several points in the system the Contracting Officer will take samples of water in properly sterilized containers for bacterial examination. The samples of water shall be tested for total coliform organisms (coliform bacteria, fecal coliform, streptococcal, and other bacteria) in accordance with AWWA-01. The testing method used shall be either the multiple-tube fermentation technique or the membrane-filter technique. The sterilizing shall be repeated until tests indicate the absence of coliform organisms (zero mean coliform density per 100 milliliters) in the samples for at least 2 full days. The system will not be accepted until satisfactory bacteriological results have been obtained.

3.8 PLUMBING FIXTURE SCHEDULE

P-1 WATER CLOSET:

Siphon-jet, elongated bowl, top supply spud, ASME A112.19.2M, wall mounted. Floor flange shall be copper alloy, cast iron, or plastic.

Gasket shall be wax type.

Seat - CID A-A-238, Type A, black plastic, elongated, open front.

Flushometer Valve - ASSE 1037, large diaphragm type with non-hold-open feature, backcheck angle control stop, and vacuum breaker. Minimum upper chamber inside diameter of not less than 66.7 mm (2-5/8 inches) at the point where the diaphragm is sealed between the upper and lower chambers. The maximum water use shall be 6 liters (1.6 gallons) per flush.

Top rim of bowl shall be 457 mm (18 inches) above the floor.

P-3 URINAL:

Wall hanging, with integral trap and extended shields, ASME A112.19.2M siphon jet. Top supply connection, back outlet.

Flushometer Valve - Similar to Flushometer Valve for P-1. The maximum water use shall be 3.8 liters (1 gallon) per flush.

P-6 WHEELCHAIR LAVATORY:

Vitreous china, FS WW-P-541/9, Type III, Class 2, Control A, 508.0 mm wide by 685.8 mm deep (20 inches wide by 27 inches deep) with gooseneck spout. Flow shall be limited to 0.16 liter per sec (0.25 gpm) per cycle at a flowing water pressure of 549 kPa (80 psi) if a metering device or fitting is used that limits the period of water discharge such as foot switch or fixture occupancy sensor. If a metering device is not used, the flow shall be limited to 1.57 liters per second (2.5 gpm) at a flowing water pressure of 549 kPa. (80 psi.)

Drain - Strainer shall be copper alloy or stainless steel.

P-8 SERVICE SINK:

Enameled cast iron, copper alloy or stainless steel rim guard, FS WW-P-541/5 corner, floor mounted \711.2 mm (28 inches) square, 171.5 mm (6-3/4 inches) deep.

Faucet and Spout - Cast or wrought copper alloy, with top or bottom brace, with backflow preventer. Faucets shall have replaceable seat and the washer shall rotate onto the seat. Handles shall be lever type. Strainers shall have internal threads.

Drain Assembly - Plug, cup strainer, crossbars, jam nuts, washers, couplings, stopper, etc. shall be copper alloy or stainless steel.

Trap - Cast iron.

P-10 LABORATORY SINK:

FS WW-P-541/5, countertop 508.0 mm wide by 381.0 mm deep (20 inches wide by 15 inches deep) 762.0 mm wide by 508.0 mm deep (30 inches wide by 20 inches deep) acid-resistant enameled cast iron. Thickness of sinks shall be manufacturer's standard. Drain shall be stainless steel.

Faucet and Spout - Cast or wrought copper alloy, without top or bottom brace, with backflow preventer. Faucets shall have replaceable seat and the washer shall rotate onto the seat. Strainers shall have internal threads.

Handles - Cast copper alloy, wrought copper alloy, or stainless steel, lever type.

P-13 Shower: Shower heads, other than emergency showers, shall include a non-removable, tamperproof device to limit shower flow to 0.173 liters per second (2.75 gpm) when tested in accordance with ASME A112.18.1M.

Wall Mounted: Shower head shall be nonadjustable spray, stainless steel or chromium plated brass with ball joint. Handles shall be chrome-plated die cast zinc alloy. Control valves shall be copper alloy and have metal integral parts of copper alloy, nickel alloy, or stainless steel. Valves shall be thermostatic mixing type. Shower head shall be vandalproof with integral back.

Emergency Showers: Head for Emergency and Emergency Eye and Face Wash. Shower control shall be 25 mm (1 inch) or 40 mm (1-1/2 inch) stay-open type control valve. Unit shall be corrosion-resisting steel and shall be pedestal mounted.

P-15 WATER COOLER DRINKING FOUNTAINS:

Water cooler drinking fountains shall: be self contained, conform to ARI 1010, use one of the halogenated fluorocarbons as a refrigerant, have a capacity to deliver 30.2 liters per hour (8 gph) of water at 10 degrees C (50 degrees F) with an inlet water temperature of 27 degrees C (80 degrees F) while residing in a room environment of 32 degrees C (90 degrees F), and have self-closing valves. Self-closing valves shall have automatic stream regulators, have a flow control capability, have a push button actuation or have a cross-shaped index metal turn handle without a hood. Exposed surfaces of stainless steel shall have No. 4 general polish finish. Spouts shall provide a flow of water at least 100 mm (4 inches) high so as to allow the insertion of a cup or glass under the flow of water.

Handicapped - Handicapped units shall be surface wall-mounted. The dimensions shall be 381.0 mm (15 inches) wide, 508.0 mm (20 inches) deep, with a back height of 152.4 to 203.2 mm (6 to 8 inches). The unit shall clear the floor or ground by at least 200 mm (8 inches). A clear knee space shall exist between the bottom of the bowl and the floor or ground of at least 685 mm (27 inches) and between the front edge of the bowl and the body of the unit of at least 200 mm (8 inches). A 200 mm (8 inch) wide clear space shall exist on both sides of the unit. The spout height shall

be no more than 1 m (36 inches) above the floor or ground to the outlet. The spout shall be at the front of the unit and direct the water flow in a trajectory that is parallel or nearly parallel to the front of the unit. The bowl shall be 165.1 mm (6-1/2 inches) high, made of corrosion resisting steel and be for interior installation.

3.9 POSTED INSTRUCTIONS

Framed instructions under glass or in laminated plastic, including wiring and control diagrams showing the complete layout of the entire system, shall be posted where directed. Condensed operating instructions explaining preventive maintenance procedures, methods of checking the system for normal safe operation, and procedures for safely starting and stopping the system shall be prepared in typed form, framed as specified above for the wiring and control diagrams and posted beside the diagrams. The framed instructions shall be posted before acceptance testing of the systems.

3.10 PERFORMANCE OF WATER HEATING EQUIPMENT

Standard rating condition terms are as follows:

EF = Energy factor, overall efficiency.

ET = Thermal efficiency with 21 degrees C delta T.

EC = Combustion efficiency, 100 percent - flue loss when smoke = o (trace is permitted).

SL = Standby loss in W/0.093 sq. m. based on 27 degrees C delta T, or in percent per hour based on nominal 38 degrees C delta T.

HL = Heat loss of tank surface area.

V = Storage volume in liters

Standard rating condition terms are as follows:

EF = Energy factor, overall efficiency.

ET = Thermal efficiency with 70 degrees F delta T.

EC = Combustion efficiency, 100 percent - flue loss when smoke = o (trace is permitted).

SL = Standby loss in W/sq. ft. based on 80 degrees F delta T, or in percent per hour based on nominal 90 degrees F delta T.

HL = Heat loss of tank surface area.

V = Storage volume in gallons

3.10.1 Storage Water Heaters

3.10.1.1 Electric

a. Storage capacity of 454 liters (120 gallons) or less, and input rating of 12 kW or less: minimum energy factor (EF) shall be 0.95-0.00132V per 10 CFR 430.

TABLE I
PIPE AND FITTING MATERIALS FOR
DRAINAGE, WASTE, AND VENT PIPING SYSTEMS

		SERVICE					
Item No.	Pipe and Fitting Materials	A	B	C	D	E	F
1	Cast iron soil pipe and fittings, hub and spigot, ASTM A 74 with compression gaskets	X		X			
2	Cast iron pipe and fittings hubless, CISPI Std 301 and ASTM A 888		X		X		
20	Polyvinyl Chloride plastic drain, waste and vent pipe and fittings, ASTM D 2665, ASTM F 891, (Sch 40)		X				

SERVICE:

A - Underground Building Soil, Waste and Storm Drain
B - Aboveground Soil, Waste, Drain In Buildings
C - Underground Vent
D - Aboveground Vent
E - Interior Rainwater Conductors Aboveground
F - Corrosive Waste And Vent Above And Below round
* - Hard Temper

TABLE II
PIPE AND FITTING MATERIALS FOR PRESSURE PIPING SYSTEMS

		SERVICE			
Item No.	Pipe and Fitting Materials	A	B	C	D
1	Malleable-iron threaded fittings, a. Galvanized, ASME B16.3 for use with Item 4a		X		
4	Steel pipe: a. Seamless, galvanized, ASTM A 53, Type S, Grade B		X		
7	Seamless copper pipe, ASTM B 42	X	X		
8	Seamless copper water tube, ASTM B 88	X**	X**	X**	
10	Cast bronze threaded fittings, ASME B16.15 for use with Items 7 and 8	X	X		
11	Wrought copper and bronze solder-joint pressure fittings, ASME B16.22 for use with Items 7 and 8	X	X	X	
12	Cast copper alloy solder-joint pressure fittings, ASME B16.18 for use with Items 7 and 8	X	X	X	
13	Bronze and sand castings grooved joint pressure fittings for non-ferrous pipe ASTM B 584, for use with Item 2	X	X	X	
37	Unions: brass or bronze, FS WW-U-516	X	X		

A - Cold Water Aboveground

B - Hot Water 82 degree C (180 degrees F) Maximum Aboveground

C - Compressed Air Lubricated

D - Cold Water Service Below ground

Indicated types are minimum wall thicknesses.

** - Type L - Hard

*** - Type K - Hard temper with brazed joints only or type K-soft temper without joints in or under floors

**** - In or under slab floors only brazed joints

TABLE III
STANDARD RATING CONDITIONS AND MINIMUM PERFORMANCE RATINGS FOR WATER HEATING EQUIPMENT

A. STORAGE WATER HEATERS

FUEL	STORAGE CAPACITY LITERS	INPUT RATING	TEST PROCEDURE	MINIMUM PERFORMANCE
Elect.	454 max.	12 kW max.	10 CFR 430	EF = 0.95-0.00132V minimum

TERMS:

EF = Energy factor, overall efficiency.
Et = Thermal efficiency with 21 degrees C delta T.
Et = Combustion efficiency, 100 percent - flue loss when smoke = 0 (trace is permitted).
SL = Standby loss in W/0.09 sq. m. based on 27 degrees C delta T, or in percent per hour based on nominal 32 degrees C delta T.
HL = Heat loss of tank surface area
V = Storage volume in gallons

TABLE III
STANDARD RATING CONDITIONS AND MINIMUM PERFORMANCE RATINGS FOR WATER HEATING EQUIPMENT

A. STORAGE WATER HEATERS

FUEL	STORAGE CAPACITY LITERS	INPUT RATING	TEST PROCEDURE	MINIMUM PERFORMANCE
Elect.	120 max.	12 kW max.	10 CFR 4430	EF = 0.95-0.00132V minimum

TERMS:

EF = Energy factor, overall efficiency.
Et = Thermal efficiency with 70 degrees F delta T.
Ec = Combustion efficiency, 100 percent - flue loss when smoke = 0 (trace is permitted).
SL = Standby loss in W/sq. ft. based on 80 degrees F delta T, or in percent per hour based on nominal 90 degrees F delta T.
HL = Heat loss of tank surface area
V = Storage volume in gallons

- - o 0 o - -

SECTION 15566

WARM AIR HEATING SYSTEMS

PART 1 GENERAL

1.1 REFERENCES

The publications listed below form a part of this specification to the extent referenced. The publications are referred to in the text by basic designation only.

AMERICAN SOCIETY FOR TESTING AND MATERIALS (ASTM)

ASTM B 117	(1990) Salt Spray (Fog) Testing

NATIONAL ELECTRICAL MANUFACTURERS ASSOCIATION (NEMA)

NEMA DC 3	(1989) Residential Controls - Electrical Wall-Mounted Room Thermostats

NATIONAL FIRE PROTECTION ASSOCIATION (NFPA)

NFPA 90A	(1993) Installation of Air Conditioning and Ventilating Systems
NFPA 90B	(1993) Warm Air Heating and Air Conditioning Systems

UNDERWRITERS LABORATORIES (UL)

UL-01	(1993; Supple) Building Materials Directory
UL-03	(1993; Supple) Electrical Construction Materials Directory
UL-05	(1993; Supple) Fire Resistance Directory

1.2 GENERAL REQUIREMENTS

1.2.1 Standard Products

Material and equipment shall be the standard product of a manufacturer regularly engaged in the manufacture of the products. Equipment shall essentially duplicate equipment that has been in satisfactory use at least 2 years prior to bid opening.

1.2.2 Nameplates

Each major component of equipment shall have the manufacturer's name, address, type or style, model or serial number, and catalog number on a plate secured to the equipment.

1.2.3 Verification of Dimensions

The Contractor shall become familiar with all details of the work and working conditions, verify all dimensions in the field and shall advise the Contracting Officer of any discrepancy before performing any work.

1.3 SUBMITTALS

The following shall be submitted in accordance with Section 01300 SUBMITTAL DESCRIPTIONS:

SD-01 Data

Heating Equipment.

Spare parts data for each different item of material and equipment specified, after approval of detail drawings and not later than 1 month prior to the date of beneficial occupancy. The data shall include a complete list of parts and supplies, with current unit prices and source of supply, a recommended spare parts list for 12 months operation, and a list of the parts recommended by the manufacturer to be replaced after 1 year of service.

SD-04 Drawings

Heating Equipment.

Drawings shall consist of a complete list of equipment and material including manufacturer's descriptive and technical literature, catalog cuts, and installation instructions. Drawings shall contain complete equipment wiring diagrams, and any other details required to demonstrate that the system has been coordinated and will properly function as a unit. Drawings shall show proposed layout and anchorage of equipment and appurtenance and equipment relationship to other parts of the work including clearances required for maintenance and operation.

SD-09 Reports

On-Site Tests.

Test reports in booklet form showing all field tests performed to adjust each component and all field tests performed to prove compliance with the specified performance criteria, upon completion and testing of the installed system. Each test report shall indicate the final position of controls.

SD-19 Operation and Maintenance Manuals

Heating Equipment.

Six complete copies of operating instructions outlining the step-by-step procedures required for system startup, operation and shutdown. The instructions shall include the manufacturer's name, model number, service manual, parts list, and a brief description of all equipment and their basic operating features. Six complete copies of maintenance instructions listing routine maintenance procedures, possible breakdowns and repairs and troubleshooting guide. The instructions shall include piping and equipment layouts and simplified wiring and control diagrams of the systems as installed.

1.4 DELIVERY AND STORAGE

Equipment delivered and placed in storage shall be stored with protection from the weather, humidity and temperature variations, dirt and dust, or other contaminants.

1.5 ELECTRICAL WORK

Unless otherwise specified, electrical equipment, conduit, and wiring shall be in accordance with Section 16415 ELECTRICAL EQUIPMENT, INTERIOR. Electrical motor-driven equipment shall be complete with motor, motor starter, and controls. Motors shall have electrical characteristics and enclosure type as shown. Unless otherwise indicated, motors of 746 W (1 hp) and above shall be high efficiency type.

PART 2 PRODUCTS

2.1 AIR CONDITIONING EQUIPMENT

Cooling coils, condensers and related equipment shall be as specified in Section 15653 AIR CONDITIONING SYSTEM (UNITARY TYPE).

2.2 UNIT HEATERS

Self-contained and factory assembled, propeller fan with capacities expressed as Btu per hour output and cubic foot-per-minute air delivery, operating conditions, and mounting arrangements as indicated. Average fan bearing life shall be minimum 200,000 hours at operating conditions. Provide fan motor with direct drive. Construct fan-guard motor mount of steel wire. Equip each heater with individually adjustable package discharge louver. Louvers may be substituted by discharge cones or diffusers. Provide thermostats. Furnish circuit breaker disconnect switch.

2.2.1 Electric Unit Heater

UL listed; wattage, voltage, phase, and number of steps as indicated. Provide control-circuit terminals and single source of power supply. Heater 5 kW and larger shall be three-phase, with load balanced on each of the three phases. Limit leaving air temperature below 60 degrees C at 15.5 degrees C (140 degrees F at 60 degrees F) entering air.

2.2.1.1 Casing

Minimum 20 gage steel.

2.2.1.2 Heating Element

Nickel-chromium heating wire element, free from expansion noise and 60 Hz hum. Embed element in magnesium-oxide insulating refractory. Seal element in high-mass steel or corrosion-resisting metallic sheath with fins. Enclose element ends in terminal box. Space fins at maximum six fins per inch. Limit fin surface temperature 288 degrees C (550 degrees F) at any point during normal operation.

2.2.1.3 Controls

Include limit controls for thermal overheat protection of heaters. For remote thermostatic operation, provide contactor rated for 100,000 duty cycles. Provide a control transformer to supply 120-volt thermostat control circuit for each heater. Provide room thermostat for pilot duty.

2.2.1.4 Wiring

Completely factory-prewired to terminal strips, ready to receive branch circuit and control connections for 60 degrees C (140 degrees F) copper wiring.

2.3 THERMOSTATS

Thermostats shall be wall-mounted, line voltage type or low voltage type conforming to NEMA DC 3. Thermostat shall have an operating range from 10 degrees C to 32 degrees C (50 degrees F to 90 degrees F), a temperature setting scale legibly and permanently marked indicating degrees F with a maximum increment of 3 degrees C (5 degrees F). The housing of the thermostat shall afford the operating mechanism reasonable protection from physical abuse and shall include an outer cover made of either corrosion-resisting metal or metal with a corrosion-resistant finish, or molded, heavy-duty, high impact resistant plastic. The mounting plate or base shall be made of thermal insulating material or shall support the thermal element not less than 6.4 mm (1/4 inch) from the wall. The control unit of the thermostat shall consist of a temperature sensing element, control switch, and anticipating heater. The sensing element shall activate the control switch to provide single or multistage control for heating and/or cooling equipment as required. The control switch shall be a hermetically-sealed switch. The thermostat shall be designed for an operating differential per stage of not less than 0.4 degrees C (0.8 degrees F) for cooling and not more than 1 degree C (2 degrees F) for both heating and cooling. Thermostat shall have provisions for calibrating the unit to the accuracy specified in NEMA DC 3. The design shall preclude calibration adjustment with ordinary tools, such as a screwdriver or

pliers. When mercury switches are used in the control unit a leveling surface which is an integral part of the thermostat shall be provided for use in leveling the thermostat during installation. When dual compressor condensing units are provided, the thermostat shall be two-stage cooling type.

2.3.1 Heating-Only Thermostats

Heating-only thermostats shall have a single control unit and shall have an adjustable heating anticipator or other means for maintaining operating differential. Unless otherwise specified, a system selector switch having "heat" and "off" positions, and a fan selector switch having "auto" and "on" positions shall be provided integral to or mounted on a subbase of the thermostat.

2.3.2 Heating-Cooling Thermostats

Heating-cooling thermostats shall have two separate control units or other proven means integral to the thermostatic control switch designed to prevent simultaneous activation of the heating and cooling circuits. Switches shall have manual changeover from heating to cooling. The heating control unit shall have adjustable heat anticipation or other means for maintaining operating differentials. The cooling control unit shall have fixed cooling anticipation or other means for maintaining operating differentials. A system selector switch and a fan selector switch shall be provided integral to or mounted on a subbase of all heating-cooling thermostats. The fan selector switch shall have "auto" position. Heating-cooling thermostat shall have a system selector switch having "heat," "off," and "cool" positions. AHU-1 thermostat shall have night set-back capability.

PART 3 EXECUTION

3.1 HEATING EQUIPMENT

The warm air heating installation shall conform to the requirements contained in NFPA 90A or NFPA 90B, as applicable.

3.1.1 Unit Heaters

Suspensions for mounting equipment and accessories including supports, vibration isolators, stands, guides, anchors, clamps, and brackets shall be provided. Suspension for equipment shall conform to the recommendations of the manufacturer, unless otherwise indicated on drawings. Equipment shall be located as indicated and in such a manner that working space is available for all necessary servicing, such as shaft removal, replacing, or adjusting drives, motors, or shaft seals, access to automatic controls, and lubrication. Electrical isolation shall be provided between dissimilar metals for the purpose of minimizing galvanic corrosion. The interior of cabinets or casings shall be cleaned before completion of installation.

3.2 ELECTRICAL COMPONENTS

Installation of all required electrical components such as motors, motor-starters, control stations, switches, and disconnects for the unit heaters shall conform to Section 16415 ELECTRICAL WORK, INTERIOR and as recommended by the equipment manufacturer.

3.3 INSULATION

On-site applied insulation shall conform to Section 15250 THERMAL INSULATION FOR MECHANICAL SYSTEMS.

3.4 ON-SITE TESTS

Upon completion and prior to acceptance of the installation, the Contractor shall furnish all equipment, instruments, materials, labor, and supervision required for the tests as specified. Water, electricity, and fuel required for testing will be furnished by the Government. All defects disclosed by

the tests shall be rectified. All tests shall be made under the direction and subject to the approval of the Contracting Officer. All indicating instruments shall be read at 1/2-hour intervals unless otherwise directed by the Contracting Officer.

3.5 TESTING, ADJUSTING, AND BALANCING

Testing, adjusting, and balancing shall be as specified in SECTION 15990 TESTING, ADJUSTING, AND BALANCING OF HVAC SYSTEMS.

3.6 FIELD TRAINING

Contractor shall conduct a training course for the maintenance and operating staff. The training period of 2 hours normal working time shall start after the system is functionally complete but before the final acceptance tests. The training shall include all of the items contained in the operating and maintenance instructions as well as demonstrations of routine maintenance operations. Contracting Officer shall be given at least 2 weeks advance notice of such training.

3.7 PAINTING AND FINISHING

3.7.1 Factory Coating

Equipment and component items, when fabricated from ferrous metal, shall be factory finished with the manufacturer's standard finish except that items located outside the buildings shall have weather-resistant finishes that will withstand 125 hours of exposure to the salt spray test specified in ASTM B 117 using a 20 percent sodium chloride solution. Immediately after completion of the test, the specimen shall show no sign of blistering, wrinkling, cracking, or loss of adhesion and no sign of rust creepage beyond 3 mm (1/8 inch) on either side of the scratch mark. Cut edges or otherwise damaged surfaces of hot-dip galvanized sheet steel or mill galvanized sheet steel shall be coated with a zinc rich paint.

- - o O o - -

SECTION 15653

AIR-CONDITIONING SYSTEM (UNITARY TYPE)

PART 1 GENERAL

1.1 REFERENCES

The publications listed below form a part of this specification to the extent referenced. The publications are referred to in the text by basic designation only.

AIR CONDITIONING AND REFRIGERATION INSTITUTE (ARI)

ARI 210/240	(1989) Unitary Air-Conditioning and Air-Source Heat Pump Equipment
ARI 270	(1984) Sound Rating of Outdoor Unitary Equipment
ARI 360	(1986) Commercial and Industrial Unitary Air-Conditioning Equipment
ARI 410	(1991) Forced-Circulation Air-Cooling and Air-Heating Coils
ARI 710	(1986) Liquid-Line Driers
ARI 720	(1988) Refrigerant Access Valves and Hose Connectors
ARI 750	(1987) Thermostatic Refrigerant Expansion Valves
ARI 760	(1987) Solenoid Valves for Use with Volatile Refrigerants

AIR DIFFUSION COUNCIL (ADC)

ADC 1062:GRD	(1984) Test Codes for Grilles, Registers and Diffusers

AIR MOVEMENT AND CONTROL ASSOCIATION (AMCA)

AMCA 500	(1989) Test Methods for Louvers, Dampers and Shutters

AMERICAN NATIONAL STANDARDS INSTITUTE (ANSI)

ANSI S1.13	(1971; R 1986) Methods for the Measurement of Sound Pressure Levels

AMERICAN SOCIETY FOR TESTING AND MATERIALS (ASTM)

ASTM A 123	(1989a) Zinc (Hot-Dip Galvanized) Coatings on Iron and Steel Products
ASTM A 153	(1982; R 1987) Zinc Coating (Hot-Dip) on Iron and Steel Hardware
ASTM A 183	(1983; R 1990) Carbon Steel Track Bolts and Nuts
ASTM A 307	(1993a) Carbon Steel Bolts and Studs, 60 000 psi Tensile Strength
ASTM A 525	(1993) General Requirements for Steel Sheet, Zinc-Coated (Galvanized) by the Hot-Dip Process
ASTM A 780	(1994) Standard Practice for Repair of Damaged and Uncoated Areas of Hot-Dip Galvanized Coatings

ASTM B 32	(1993) Solder Metal
ASTM B 62	(1993) Composition Bronze or Ounce Metal Castings
ASTM B 75	(1993) Seamless Copper Tube
ASTM B 117	(1990) Salt Spray (Fog) Testing
ASTM B 280	(1993a) Seamless Copper Tube for Air Conditioning and Refrigeration Field Service
ASTM C 534	(1988) Preformed Flexible Elastomeric Cellular Thermal Insulation in Sheet and tubular Form
ASTM C 916	(1990) Adhesives for Duct Thermal Insulation
ASTM C 1071	(1991) Thermal and Acoustical Insulation (Glass Fiber, Duct Lining Material)
ASTM D 2000	(1990) Rubber Products in Automotive Applications
ASTM E 84	(1991a) Surface Burning Characteristics of Building Materials
ASTM E 437	(1992) Industrial Wire Cloth and Screens (Square Opening Series)
ASTM F 104	(1993) Nonmetallic Gasket Materials
ASTM F 872	(1984; R 1990) Filter Units, Air Conditioning: Viscous-Impingement Type, Cleanable

AMERICAN SOCIETY OF HEATING, REFRIGERATING AND AIR-CONDITIONING ENGINEERS (ASHRAE)

ASHRAE 15	(1992) Safety Code for Mechanical Refrigeration
ASHRAE 52.1	(1992) Gravimetric and Duct-Spot Procedures for Testing Air-Cleaning Devices Used in General Ventilation for Removing Particulate Matter

AMERICAN SOCIETY OF MECHANICAL ENGINEERS (ASME)

ASME B16.22	(1989) Wrought Copper and Copper Alloy Solder Joint Pressure Fittings
ASME B16.26	(1988) Cast Copper Alloy Fittings for Flared Copper Tubes
ASME B31.5	(1992; B31.5a) Refrigeration Piping
ASME BPV VIII Div 1	(1992; Addenda Dec 1992, Dec 1993) Boiler and Pressure Vessel Code; Section VIII, Pressure Vessels Division 1 - Basic Coverage
ASME BPV IX	(1992; Addenda Dec 1992, Dec 1993) Boiler and Pressure Vessel Code; Section IX, Welding and Brazing Qualifications

COMMERCIAL ITEM DESCRIPTIONS (CID)

CID A-A-50502	(Basic) Air Conditioner, (Unitary Heat Pump), Air to Air (3,000 to 300,000 BTU)

FEDERAL SPECIFICATIONS (FS)

FS BB-F-1421	(Rev B) Fluorocarbon Refrigerants

MANUFACTURERS STANDARDIZATION SOCIETY OF THE VALVE AND FITTINGS INDUSTRY (MSS)

MSS SP-58	(1993) Pipe Hangers and Supports - Materials, Design and Manufacture
MSS SP-69	(1991) Pipe Hangers and Supports - Selection and Application

NATIONAL ELECTRICAL MANUFACTURERS ASSOCIATION (NEMA)

NEMA ICS 6	(1993) Enclosures for Industrial Control and Systems
NEMA MG 1	(1993) Motors and Generators
NEMA MG 2	(1989) Safety Standard for Construction and Guide for Selection, Installation, and Use of Electric Motors and Generators

NATIONAL FIRE PROTECTION ASSOCIATION (NFPA)

NFPA 70	(1993) National Electrical Code
NFPA 90A	(1993) Installation of Air Conditioning and Ventilating Systems
NFPA 255	(1990) Method of Test of Surface Burning Characteristics of Building Materials

SHEET METAL AND AIR CONDITIONING CONTRACTORS NATIONAL ASSOCIATION (SMACNA)

SMACNA-05	(1992) Fire, Smoke and Radiation Damper Installation Guide for HVAC Systems
SMACNA-06	(1985) HVAC Duct Construction Standards - Metal and Flexible
SMACNA-10	(1985) HVAC Air Duct Leakage Test Manual

UNDERWRITERS LABORATORIES (UL)

UL-01	(1994) Building Materials Directory
UL-03	(1993; Supple) Electrical Construction Materials Directory
UL-05	(1994) Fire Resistance Directory
UL 181	(1990; Rev Nov 1990) Factory-Made Air Ducts and Air Connectors
UL 207	(1993; Rev Feb 1994) Refrigerant-Containing Components and Accessories, Nonelectrical
UL 214	(1993) Tests for Flame-Propagation of Fabrics and Films
UL 555	(1990; Rev thru Nov 1993) Fire Dampers
UL 900	(1987; Rev Jul 1993) Test Performance of Air Filter Units
UL 1995	(1990) Heating and Cooling Equipment

1.2 SUBMITTALS

The following shall be submitted in accordance with Section 01300 SUBMITTAL DESCRIPTIONS:

SD-01 Data

Air-Conditioning/Heat Pump System.

Manufacturer's standard catalog data, prior to the purchase or installation of a particular component, shall be highlighted to show brand name, model number, size, options, performance charts and curves, etc. in sufficient detail to demonstrate compliance with contract requirements. Data shall be submitted for each specified component. Data shall include manufacturer's recommended installation instructions and procedures. If vibration isolation is specified for a unit, vibration isolator literature shall be included containing catalog cuts and certification that the isolation characteristics of the isolators provided meet the manufacturer's recommendations.

Spare Parts Data.

Spare parts data for each different item of equipment specified, after approval of detail drawings and not later than 2 months prior to the date of beneficial occupancy. The data shall include a complete list of parts and supplies, with current unit prices and source of supply, a recommended spare parts list for 1 year of operation, and a list of the parts recommended by the manufacturer to be replaced on a routine basis.

SD-04 Drawings

Air-Conditioning/Heat Pump System.

Drawings shall provide adequate detail to demonstrate compliance with contract requirements. Drawings shall consist of:

(1) Equipment layouts which identify assembly and installation details.

(2) Plans and elevations which identify clearances required for maintenance and operation.

(3) Wiring diagrams which identify each component individually and interconnected or interlocked relationships between components.

(4) Foundation drawings, bolt-setting information, and foundation bolts prior to concrete foundation construction for equipment indicated or required to have concrete foundations.

(5) Details, if piping and equipment are to be supported other than as indicated, which include loadings and type of frames, brackets, stanchions, or other supports.

(6) Automatic temperature control diagrams and control sequences.

(7) Installation details which includes the amount of factory set superheat and corresponding refrigerant pressure/temperature.

SD-06 Instructions

Framed Instructions.

Framed instructions for posting, at least 2 weeks prior to construction completion.

SD-07 Schedules

Tests.

A letter, at least 10 working days in advance of each tests, advising the Contracting Officer of the test. Individual letters shall be submitted for the ductwork leak tests and the system performance tests. Each letter shall identify the date, time, and location for each test.

Demonstrations.

A letter, at least 14 working days prior to the date of the proposed training course, which identifies the date, time, and location for the training.

SD-08 Statements

Verification of Dimensions.

A letter, at least 2 weeks prior to beginning construction, including the date the site was visited, conformation of existing conditions, and any discrepancies found.

SD-09 Reports

Tests.

Six copies of each test containing the information described below in bound 216 by 279 mm (8-1/2 by 11 inch) booklets. Individual reports shall be submitted for the ductwork leak tests.

(1) The date the tests were performed.

(2) A list of equipment used, with calibration certifications.

(3) Initial test summaries.

(4) Repairs/adjustments performed.

(5) Final test results.

System Performance Tests.

Six copies of the report shall be provided in bound 216 by 279 mm (8-1/2 by 11 inch) booklets. The report shall document compliance with the specified performance criteria upon completion and testing of the system. The report shall indicate the number of days covered by the tests and any conclusions as to the adequacy of the system. The report shall also include the following information and shall be taken at least three different times at outside dry-bulb temperatures that are at least 3 degrees C (5 degrees F) apart:

(1) Date and outside weather conditions.

(2) The load on the system based on the following:

(a) The refrigerant used in the system.

(b) Suction temperature and pressure.

(c) Ambient, condensing and coolant temperatures

(d) Running current, voltage and proper phase sequence for each phase of all motors.

(3) The actual on-site setting of operating and safety controls.

(4) High and low refrigerant temperature switch set-points

(5) Capacity control set-points

(6) Field data and adjustments which affect unit performance and energy consumption.

(7) Field adjustments and settings which were not permanently marked as an integral part of a device.

SD-13 Certificates

Air-Conditioning/Heat Pump System.

Where the system, components, or equipment are specified to comply with requirements of ARI, ASHRAE, ASME, or UL, proof of such compliance shall be provided. The label or listing of the specified agency shall be acceptable evidence. In lieu of the label or listing, a written certificate from an approved, nationally recognized testing organization equipped to perform such services, stating that the items have been tested and conform to the requirements and testing methods of the specified agency may be submitted. When performance requirements of this project's drawings and specifications vary from standard ARI rating conditions, computer printouts, catalog, or other application data certified by ARI or a nationally recognized laboratory as described above shall be included. If ARI does not have a current certification program that encompasses such application data, the manufacturer may self certify that his application data complies with project performance requirements in accordance with the specified test standards.

Service Organizations.

A certified list of qualified permanent service organizations for support of the equipment which includes their addresses and qualifications. The service organizations shall be reasonably convenient to the equipment installation and be able to render satisfactory service to the equipment on a regular and emergency basis during the warranty period of the contract.

SD-19 Operation and Maintenance Manuals

Operation Manual.

Six complete copies of an operation manual in bound 216 by 279 mm (8-1/2 by 11 inch) booklets listing step-by-step procedures required for system startup, operation, and shutdown. The booklets shall include the manufacturer's name, model number, and parts list. The manuals shall include the manufacturer's name, model number, service manual, and a brief description of all equipment and their basic operating features.

Maintenance Manual.

Six complete copies of maintenance manual in bound 216 by 279 mm (8-1/2 by 11 inch) booklets listing routine maintenance procedures, possible breakdowns and repairs, and a trouble shooting guide. The manuals shall include piping and equipment layouts and simplified wiring and control diagrams of the system as installed.

1.3 QUALIFICATIONS

Structural members shall be welded in accordance with Section 05055 WELDING, STRUCTURAL.

1.4 DELIVERY, STORAGE, AND HANDLING

Stored items shall be protected from the weather and contamination. Proper protection and care of all material before, during, and after installation shall be the Contractor's responsibility. Any materials found to be damaged shall be replaced at the Contractor's expense. During installation, piping and similar openings shall be capped to keep out dirt and other foreign matter.

1.5 PROJECT/SITE CONDITIONS

1.5.1 Verification of Dimensions

The Contractor shall become familiar with all details of the work, verify dimensions in the field, and advise the Contracting Officer of any discrepancy before performing any work.

1.5.2 Drawings

Because of the small scale of the drawings, it is not possible to indicate all offsets, fittings, and accessories that may be required. The Contractor shall carefully investigate the plumbing, fire protection, electrical, structural and finish conditions that would affect the work to be performed and arrange such work accordingly, furnishing required offsets, fittings, and accessories to meet such conditions. Equipment, ductwork, and piping arrangements shall fit into space allotted and allow adequate acceptable clearances for installation, replacement, entry, servicing, and maintenance.

PART 2 PRODUCTS

2.1 STANDARD PRODUCTS

Materials and equipment shall be standard products of a manufacturer regularly engaged in the manufacturing of such products, which are of a similar material, design and workmanship. The standard products shall have been in satisfactory commercial or industrial use for 2 years prior to bid opening. The 2 year use shall include applications of equipment and materials under similar circumstances and of similar size. The 2 years experience shall be satisfactorily completed by a product which has been sold or is offered for sale on the commercial market through advertisements, manufacturer's catalogs, or brochures. Products having less than a 2 year field service record shall be acceptable if a certified record of satisfactory field operation, for not less than 6000 hours exclusive of the manufacturer's factory tests, can be shown. Products shall be supported by a service organization. System components shall be environmentally suitable for the indicated locations.

2.2 NAMEPLATES

Major equipment including compressors, fans, and motors shall have the manufacturer's name, address, type or style, model or serial number, and catalog number on a plate secured to the item of equipment. Plates shall be durable and legible throughout equipment life and made of anodized aluminum. Plates shall be fixed in prominent locations with nonferrous screws or bolts.

2.3 ELECTRICAL WORK

Electrical equipment, motors, motor efficiencies, and wiring shall be in accordance with Section 16415 ELECTRICAL WORK, INTERIOR. Electrical motor driven equipment specified shall be provided complete with motors, motor starters, and controls. Electrical characteristics shall be as shown, and unless otherwise indicated, all motors of 746 W (1 hp) and above with open, dripproof, totally enclosed, or explosion proof fan cooled enclosures, shall be high efficiency type. Field wiring shall be in accordance with manufacturer's instructions. Each motor shall conform to NEMA MG 1 and NEMA MG 2 and be of sufficient size to drive the equipment at the specified capacity without exceeding the nameplate rating of the motor. Motors shall be continuous duty with the enclosure specified. Motor starters shall be provided complete with thermal overload protection and other appurtenances necessary for the motor control indicated. Motors shall be furnished with a magnetic across-the-line or reduced voltage type starter as required by the manufacturer. Motor duty requirements shall allow for maximum frequency start-stop operation and minimum encountered interval between start and stop. Motors shall be sized for the applicable loads. Motor torque shall be capable of accelerating the connected load within 20 seconds with 80 percent of the rated voltage maintained at motor terminals

during one starting period. Motor bearings shall be fitted with grease supply fittings and grease relief to outside of enclosure. Manual or automatic control and protective or signal devices required for the operation specified and any control wiring required for controls and devices specified, but not shown, shall be provided.

2.4 MISCELLANEOUS MATERIALS

2.4.1 Bolts and Nuts

Bolts and nuts, except as required for piping applications, shall be in accordance with ASTM A 307. The bolt head shall be marked to identify the manufacturer and the standard with which the bolt complies in accordance with ASTM A 307.

2.4.2 Pipe Hangers, Inserts, and Supports

Pipe hangers, inserts, and supports shall conform to MSS SP-58 and MSS SP-69.

2.4.3 Bird Screen

Screen shall be in accordance with ASTM E 437, Type 1, Class 1, 2 by 2 mesh, 1.6 mm (0.063 inch) diameter aluminum wire or 0.79 mm (0.031 inch) diameter stainless steel wire.

2.5 PACKAGED UNITARY AIR-CONDITIONER

Unit shall be a single, draw-through, weatherproof packaged unit. Unit shall also be provided with equipment as specified in paragraph "System Components". Evaporator or supply fans shall be double-width, double inlet, forward curved, backward inclined, or airfoil blade, centrifugal scroll type. Motors shall have open dripproof enclosures. Condenser fans shall be manufacturer's standard for the unit specified and may be either propeller or centrifugal scroll type.

2.5.1 Air-Conditioning Unit

Unit shall be in accordance with UL 1995. Unit with capacities less than 39.5 kW (135,000 Btuh) shall conform to ARI 210/240 and produce [a Coefficient of Performance (COP) of 2.6 (a Seasonal Energy Efficiency Ratio (SEER) of 10.0).

2.5.2 Integral Air Coils

Evaporator and condenser coils shall have copper or aluminum tubes of 10 mm (3/8 inch) minimum diameter with copper or aluminum fins that are mechanically bonded or soldered to the tubes. Coils shall be protected with a minimum 0.076 mm (3 mil) thick phenolic coating. Casing shall be galvanized steel or aluminum. Contact of dissimilar metals shall be avoided. Coils shall be tested in accordance with ASHRAE 15 at the factory and be suitable for the working pressure of the installed system. Each coil shall be dehydrated and sealed after testing and prior to evaluation and charging. Each unit shall be provided with a factory operating charge of refrigerant and oil or a holding charge. Unit shipped with a holding charge shall be field charged. Separate expansion devices shall be provided for each compressor circuit.

2.5.3 Integral Compressor

Compressor shall be direct drive, semi-hermetic or hermetic reciprocating, or scroll type capable of operating at partial load conditions. Compressor shall be capable of continuous operation down to the lowest step of unloading as specified. Compressors of 35 kW (10 tons) and larger shall be provided with capacity reduction devices to produce automatic capacity reduction of at least 50 percent. If standard with the manufacturer, two or more compressors may be used in lieu of a single compressor with unloading capabilities, in which case the compressors shall operate in sequence, and each compressor shall have an independent refrigeration

circuit through the condenser and evaporator. Compressors shall start in the unloaded position. Each compressor shall be provided with vibration isolators, crankcase heater, thermal overloads, high and low pressure safety cutoffs and protection against short cycling.

2.5.4 Refrigeration Circuit

Refrigerant containing components shall comply with ASHRAE 15 and be factory tested, cleaned, dehydrated, charged, and sealed. Refrigerant charging valves and connections, and pumpdown valves shall be provided for each circuit. Refrigerant flow control devices shall be an adjustable superheat thermostatic expansion valve with external equalizer matched to coil, capillary or thermostatic control, and a pilot solenoid controlled, leak-tight, four-way refrigerant flow reversing valve.

2.5.5 Unit Controls

Unit shall be internally prewired with a 24 volt control circuit powered by an internal transformer. Terminal blocks shall be provided for power wiring and external control wiring. Unit shall have cutoffs for high and low pressure, and low oil pressure for compressors with positive displacement oil pumps, supply fan failure. Head pressure controls shall sustain unit operation with ambient temperature of 105 degrees F (40 degrees C). Adjustable-cycle timers shall prevent short-cycling. Multiple compressors shall be staged by means of a time delay. Unit shall be internally protected by fuses or a circuit breaker in accordance with UL 1995. Low cost cooling shall be made possible by means of a control circuit which will modulate dampers to provide 100 percent outside air while locking out compressors.

2.6 SYSTEM COMPONENTS

2.6.1 Refrigerant and Oil

Refrigerant shall be one of the fluorocarbon gases that is in accordance with FS BB-F-1421 and has an Ozone Depletion Potential (ODP) of less than or equal to 0.05. Contractor shall provide and install a complete charge of refrigerant for the installed system as recommended by the manufacturer. Except for factory sealed units, two complete charges of lubricating oil for each compressor crankcase shall be furnished. One charge shall be used during the system performance testing period. Following the satisfactory completion of the performance testing, the oil shall be drained and replaced with a second charge. Lubricating oil shall be of a type and grade recommended by the manufacturer for each compressor. Where color leak indicator dye is incorporated, charge shall be in accordance with manufacturer's recommendation.

2.6.2 Fans

Fan wheel shafts shall be supported by either maintenance-accessible lubricated antifriction block-type bearings, or permanently lubricated ball bearings. Unit fans shall be selected to produce the cfm required at the fan total pressure. Motor starters, if applicable, shall be magnetic across-the-line type with a open, dripproof enclosure. Thermal overload protection shall be of the manual or automatic-reset type. Fan wheels or propellers shall be constructed of aluminum or galvanized steel. Centrifugal fan wheel housings shall be of galvanized steel, and both centrifugal and propeller fan casings shall be constructed of aluminum or galvanized steel. Steel elements of fans, except fan shafts, shall be hot-dipped galvanized after fabrication or fabricated of mill galvanized steel. Mill-galvanized steel surfaces and edges damaged or cut during fabrication by forming, punching, drilling, welding, or cutting shall be recoated with an approved zinc-rich compound. Fan wheels or propellers shall be statically and dynamically balanced. Forward curved fan wheels shall be limited to 16 inches. Direct-drive fan motors shall be of the multiple-speed variety. Belt-driven fans shall have adjustable sheaves. The sheave size shall be selected so that the fan speed at the approximate midpoint of the sheave adjustment will produce the specified air quantity. Centrifugal scroll-type fans shall be provided with streamlined orifice

inlet and V-belt drive. Each drive will be independent of any other drive. Propeller fans shall be direct-drive type with adjustable pitch blades. V-belt driven fans shall be mounted on a corrosion protected drive shaft supported by either maintenance-accessible lubricated antifriction block-type bearings, or permanently lubricated ball bearings. Each drive will be independent of any other drive. Drive bearings shall be protected with water slingers or shields. V-belt drives shall be fitted with guards where exposed to contact by personnel and adjustable pitch sheaves.

2.6.3 Primary/Supplemental Heating

2.6.3.1 Electric Heating Coil

Coil shall be an electric heater in accordance with UL 1995 and NFPA 70. Coil shall be unit-mounted. Coil shall be of the nickel chromium resistor, single stage, strip type. Coil shall be provided with a built-in or surface-mounted high-limit thermostat interlocked electrically so that the coil cannot be energized unless the fan is energized. Coil casing and support brackets shall be of galvanized steel or aluminum. Coil shall be mounted to eliminate noise from expansion and contraction and be completely accessible for service.

2.6.4 Air Filters

Air filters shall be listed in accordance with requirements of UL 900.

2.6.4.1 Replaceable Media Filters

Replaceable media filters shall be the dry-media type, of the size required to suit the application. Filtering media shall be not less than 50 mm (2 inches) thick fibrous glass media pad supported by a structural wire grid or woven wire mesh. Pad shall be enclosed in a holding frame of not less than 1.6 mm (16 gauge) galvanized steel, and equipped with quick-opening mechanism for changing filter media. The air flow capacity of the filter shall be based on net filter face velocity not exceeding 2.53 m/s (500 feet per minute), with initial resistance of 32 Pa (0.36 inches water gauge). Average efficiency shall be not less than 20 percent when tested in accordance with ASHRAE 52.1.

2.6.5 Coil Frost Protection

Each circuit shall be provided with a coil frost protection system which is a manufacturer's standard. The coil frost protection system shall use a temperature sensor in the suction line of the compressor to shut the compressor off when coil frosting occurs. Timers shall be used to prevent the compressor from rapid cycling.

2.6.6 Internal Dampers

Dampers shall be parallel blade type with renewable blade seals and be integral to the unitary unit. Damper provisions shall be provided for each outside air intake, exhaust, economizer, and mixing boxes. Dampers shall have minimum position stops, be linked together, have automatic modulation, and operate as specified.

2.6.7 Mixing Boxes

Mixing boxes shall match the base unit in physical size and shall include equally-sized flanged openings, each capable of full air flow. Arrangement shall be as indicated.

2.6.8 Cabinet Construction

Casings for the specified unitary equipment shall be constructed of galvanized steel or aluminum sheet metal and galvanized or aluminum structural members. Minimum thickness of single wall exterior surfaces shall be 1.0 mm (20 gauge) galvanized steel or 1.6 mm (.064 inch) thick aluminum on units with a capacity less than 70 kW (20 tons). Casing shall be fitted with lifting provisions, access panels or doors, fan vibration

isolators, electrical control panel, corrosion-resistant components, structural support members, insulated condensate drip pan and drain, and internal insulation in the cold section of the casing. Where double-wall insulated construction is proposed, minimum exterior galvanized sheet metal thickness shall be 1.0 mm (20 gauge). Provisions to permit replacement of major unit components shall be incorporated. Penetrations of cabinet surfaces, including the floor, shall be sealed. Unit shall be fitted with a drain pan which extends under all areas where water may accumulate. Drain pan shall be fabricated from Type 300 stainless steel, galvanized steel with protective coating as required, or an approved plastic material. Pan insulation shall be water impervious. Extent and effectiveness of the insulation of unit air containment surfaces shall prevent, within limits of the specified insulation, heat transfer between the unit exterior and ambient air, heat transfer between the two conditioned air streams, and condensation on surfaces. Insulation shall conform to ASTM C 1071. Paint and finishes shall comply with the requirements specified in paragraph "Factory Coating".

2.6.8.1 Outdoor Cabinet

Outdoor cabinets shall be suitable for outdoor service with a weathertight, insulated and corrosion-protected structure. Cabinets constructed exclusively for indoor service which have been modified for outdoor service are not acceptable.

2.7 INSULATION

2.7.1 Field Installed Insulation

Field installed insulation shall be as specified in Section 15250 THERMAL INSULATION FOR MECHANICAL SYSTEM.

2.7.2 Factory Installed Insulation

Factory applied insulation shall be as specified for the equipment to be insulated except that refrigerant suction lines shall be insulated with unicellular plastic foam. Insulation shall comply with the fire hazard rating specified in Section 15250 THERMAL INSULATION FOR MECHANICAL SYSTEM.

2.8 TEMPERATURE CONTROLS

Thermostats shall be in accordance with Section 15566 WARM AIR HEATING SYSTEMS.

2.9 DUCTWORK COMPONENTS

2.9.1 Metal Ductwork

Every aspect of metal ductwork construction, including fittings and components, shall comply with SMACNA-06 unless otherwise specified. Elbows shall be radius type with a centerline radius of 1-1/2 times the width or diameter of the duct where space permits. Otherwise, elbows having a minimum radius equal to the width or diameter of the duct or square elbows with factory fabricated turning vanes may be used. Static pressure Class 125, 250, 500 Pa (1/2, 1, and 2 inch w.g.) ductwork shall meet the requirements of Seal Class C. Class 750 through 2500 Pa (3 through 10 inch) shall meet the requirements of Seal Class A. Sealants shall conform to fire hazard classification specified in Section 15250 THERMAL INSULATION FOR MECHANICAL SYSTEMS. Pressure sensitive tape shall not be used as a sealant. Spiral lock seam duct, and flat oval shall be made with duct sealant and locked with not less than 3 equally spaced drive screws or other approved methods indicated in SMACNA-06. The sealant shall be applied to the exposed male part of the fitting collar so that the sealer will be on the inside of the joint and fully protected by the metal of the duct fitting. One brush coat of the sealant shall be applied over the outside of the joint to at least 50 mm (2 inch) band width covering all screw heads and joint gap. Dents in the male portion of the slip fitting collar will not be acceptable.

2.9.1.1 Transitions

Diverging air flow transitions shall be made with each side pitched out a maximum of 15 degrees, for an included angle of 30 degrees. Transitions for converging air flow shall be made with each side pitched in a maximum of 30 degrees, for an included angle of 60 degrees, or shall be as indicated. Factory-fabricated reducing fittings for systems using round duct sections when formed to the shape of the ASME short flow nozzle, need not comply with the maximum angles specified.

2.9.1.2 Insulated Nonmetallic Flexible Duct Runouts

Flexible duct runouts shall be used only where indicated. Runouts shall not exceed 3 m (10 feet) in length, shall be preinsulated, factory fabricated, and comply with NFPA 90A and UL 181. Either field or factory applied vapor barrier shall be provided. Where coil induction or high velocity units are supplied with vertical air inlets, a streamlined and vaned and mitered elbow transition piece shall be provided for connection to the flexible duct or hose. The last elbow to these units, other than the vertical air inlet type, shall be a die-stamped elbow and not a flexible connector. Insulated flexible connectors may be used as runouts. The insulation material surface shall not be exposed to the air stream.

2.9.1.3 General Service Duct Connectors

A flexible duct connector approximately 150 mm (6 inches) in width shall be provided where sheet metal connections are made to fans or where ducts of dissimilar metals are connected. For round/oval ducts, the flexible material shall be secured by stainless steel or zinc-coated, iron clinch-type draw bands. For rectangular ducts, the flexible material locked to metal collars shall be installed using normal duct construction methods. The composite connector system shall comply with UL 214 and be classified as "flame-retarded fabrics" in UL-01.

2.9.2 Ductwork Insulation

Ductwork insulation and related materials shall conform to the requirements of Section 15250 THERMAL INSULATION FOR MECHANICAL SYSTEMS.

2.9.3 Ductwork Accessories

2.9.3.1 Duct Access Doors

Access doors shall be provided in ductwork where indicated and at all automatic dampers, fire dampers, coils, and other apparatus requiring service and inspection in the duct system, and unless otherwise shown, shall conform to SMACNA-06. Doors shall be minimum 375 by 450 mm (15 by 18 inches), unless otherwise shown. Where duct size will not accommodate this size door, the doors shall be made as large as practicable. Doors 600 by 600 mm (24 by 24 inches) or larger shall be provided with fasteners operable from both sides. Doors in insulated ducts shall be the insulated type.

2.9.3.2 Fire Dampers

Fire dampers shall be 1-1/2 hour fire rated unless otherwise indicated. Fire dampers shall conform to the requirements of NFPA 90A and UL 555. Fire dampers shall be automatic operating type and shall have a dynamic rating suitable for the maximum air velocity and pressure differential to which it will be subjected. Fire dampers shall be approved for the specific application and shall be installed according to their listing. Fire dampers shall be equipped with a steel sleeve or adequately sized frame installed in such a manner that disruption of the attached ductwork, if any, will not impair the operation of the damper. Sleeves or frames shall be equipped with perimeter mounting angles attached on both sides of the wall or floor opening. Ductwork in fire-rated floor-ceiling or roof-ceiling assembly systems with air ducts that pierce the ceiling of the assemblies shall be constructed in conformance with UL-05. Fire dampers shall be curtain type with damper blades out of the air stream. Dampers

shall not reduce the duct or the air transfer opening cross-sectional area. Dampers shall be installed so that the centerline of the damper depth or thickness is located in the centerline of the wall, partition or floor slab depth or thickness. Unless otherwise indicated, the installation details given in SMACNA-05 and in manufacturer's instructions for fire dampers shall be followed.

2.9.3.3 Manual Balancing Dampers

Manual balancing dampers shall be furnished with accessible operating mechanisms. Where operators occur in finished portions of the building, operators shall be chromium plated with all exposed edges rounded. Manual volume control dampers shall be operated by locking-type quadrant operators. Dampers shall be 2 gauges heavier than the duct in which installed. Unless otherwise indicated, multileaf dampers shall be opposed blade type with maximum blade width of 300 mm. (12 inches.) Access doors or panels shall be provided for all concealed damper operators and locking setscrews. Unless otherwise indicated, the locking-type quadrant operators for dampers, when installed on ducts to be thermally insulated, shall be provided with stand-off mounting brackets, bases, or adapters to provide clearance between the duct surface and the operator not less than the thickness of the insulation. Stand-off mounting items shall be integral with the operator or standard accessory of the damper manufacturer. Volume dampers shall be provided where indicated.

2.9.3.4 Air Deflectors and Branch Connections

Air deflectors shall be provided at all 90 degree elbows, as well as at all locations as indicated on the drawings or shown in the Sheet Metal and Air Contractors National Association manuals. Fixed air deflectors, also called turning vanes, shall be provided in all 90 degree elbows. Turning vanes shall be designed as shown in the Sheet Metal and Air Condition Contractors National Association manuals.

2.9.4 Duct Sleeves, Framed Prepared Openings, Closure Collars

2.9.4.1 Duct Sleeves

Duct sleeves shall be provided for all round ducts 375 mm (15 inches) in diameter or less passing through floors, walls, ceilings, or roof, and installed during construction of the floor, wall, ceiling, or roof. Round ducts larger than 375 mm (15 inches) in diameter and all square, rectangular, and oval ducts passing through floors, walls, ceilings, or roof shall be installed through framed prepared openings. The Contractor shall be responsible for the proper size and location of sleeves and prepared openings. Sleeves and framed openings are also required where grilles, registers, and diffusers are installed at the openings. Framed prepared openings shall be fabricated from 1.0 mm (20 gauge) galvanized steel, unless otherwise indicated. Where sleeves are installed in bearing walls or partitions, black steel pipe, ASTM A 53, Schedule 20 shall be used. Sleeve shall provide 25 mm (1 inch) clearance between the duct and the sleeve or 25 mm (1 inch) clearance between the insulation and the sleeve for insulated ducts.

2.9.4.2 Framed Prepared Openings

Openings shall have 25 mm (1 inch) clearance between the duct and the opening or 25 mm (1 inch) clearance between the insulation and the opening for insulated ducts.

2.9.4.3 Closure Collars

Collars shall be fabricated of galvanized sheet metal not less than 100 mm (4 inches) wide, unless otherwise indicated, and shall be installed on exposed ducts on each side of walls or floors where sleeves or prepared openings are provided. Collars shall be installed tight against surfaces. Collars shall fit snugly around the duct or insulation. Sharp edges of the collar around insulated duct shall be ground smooth to preclude tearing or puncturing the insulation covering or vapor barrier. Collars for round

ducts 375 mm (15 inches) in diameter or less shall be fabricated from 1.0 mm (20 gauge) galvanized steel. Collars for round ducts larger than 375 mm (15 inches) and all square, and rectangular ducts shall be fabricated from 1.3 mm (18 gauge) galvanized steel. Collars shall be installed with fasteners on maximum 150 mm (6 inch) centers, except that not less than 4 fasteners shall be used.

2.9.5 Sound Attenuation Equipment

2.9.5.1 Acoustical Duct Liner

Acoustical duct lining shall be fibrous glass designed exclusively for lining ductwork and conform to the requirements of ASTM C 1071, Type I and II. Liner composition may be uniform density, graduated density, or dual density, as standard with the manufacturer. Lining shall be coated, not less than 25.4 mm (1 inch) thick, nominal, and where applicable be of sufficient thickness to be thermally equivalent to the thickness of insulation specified in Section 15250 THERMAL INSULATION FOR MECHANICAL SYSTEMS. Duct sizes shown shall be increased to compensate for the thickness of the lining used. In lieu of sheet metal duct with field-applied acoustical lining, acoustically equivalent lengths of factory fabricated double-walled internally insulated duct with perforated liner may be provided. Net insertion loss value, static pressure drop, and air flow velocity capacity data shall be certified by a nationally recognized independent acoustical laboratory.

2.9.6 Diffusers, Registers, and Grilles

Units shall be factory-fabricated of steel and shall distribute the specified quantity of air evenly over space intended without causing noticeable drafts, air movement faster than 0.25 m/s (50 fpm) in occupied zone, or dead spots anywhere in the conditioned area. Outlets for diffusion, spread, throw, and noise level shall be as required for specified performance. Performance shall be certified in accordance with ADC 1062:GRD. Inlets and outlets shall be sound rated and certified in accordance with ADC 1062:GRD. Sound power level shall be as indicated. Diffusers and registers shall be provided with volume damper with accessible operator, unless otherwise indicated; or if standard with the manufacturer, an automatically controlled device will be acceptable. Volume dampers shall be opposed blade type for all diffusers and registers. Where the inlet and outlet openings are located less than 2 m (7 feet) above the floor, they shall be protected by a grille or screen in accordance with NFPA 90A.

2.9.6.1 Diffusers

Diffuser types shall be as indicated. Ceiling mounted units shall be furnished with antismudge devices, unless the diffuser unit minimizes ceiling smudging through design features. Diffusers shall be provided with air deflectors of the type indicated. Ceiling mounted units shall be installed with rims tight against ceiling. Sponge rubber gaskets shall be provided between ceiling and surface mounted diffusers for air leakage control. Suitable trim shall be provided for flush mounted diffusers. Duct collar connecting the duct to diffuser shall be airtight and shall not interfere with volume controller.

2.9.6.2 Registers and Grilles

Units shall be four-way directional-control type, except that return and exhaust registers may be fixed horizontal louver type similar in appearance to the supply register face. Registers shall be provided with sponge-rubber gasket between flanges and wall or ceiling. Wall supply registers shall be installed at least 150 mm (6 inches) below the ceiling unless otherwise indicated. Return and exhaust registers shall be located 150 mm (6 inches) above the floor unless otherwise indicated. Four-way directional control may be achieved by a grille face which can be rotated in 4 positions or by adjustment of horizontal and vertical vanes. Grilles shall be as specified for registers, without volume control damper.

2.9.7 Louvers

Louvers shall be furnished for installation in exterior walls. Louver blades shall be fabricated from anodized aluminum or galvanized steel sheets, and shall be provided with a frame of galvanized steel or aluminum structural shapes. Sheet metal thickness and fabrication shall conform to SMACNA-06. Blades shall be accurately fitted and secured to frames. Edges of louver blades shall be folded or beaded for rigidity and baffled to exclude driving rain. Louver shall be provided with bird screen. Louvers shall bear AMCA Certified Ratings Seal for air performance and water penetration ratings as described in AMCA 500.

2.10 FABRICATION

2.10.1 Factory Coating

Unless otherwise specified, equipment and component items, when fabricated from ferrous metal, shall be factory finished with the manufacturer's standard finish, except that items located outside of buildings shall have weather resistant finishes that will withstand 125 hours exposure to the salt spray test specified in ASTM B 117 using a 25 percent sodium chloride solution. Immediately after completion of the test, the specimen shall show no signs of blistering, wrinkling, cracking, or loss of adhesion and no sign of rust creepage beyond 3 mm (1/8 inch) on either side of the scratch mark. Cut edges of galvanized surfaces where hot-dip galvanized sheet steel is used shall be coated with a zinc-rich coating.

2.10.2 Field Painting

Painting required for surfaces not otherwise specified, and finish painting of items only primed at the factory are specified in Section 09900 PAINTING, GENERAL.

2.10.2.1 Color Coding

Color coding for piping identification is specified in Section 09900 PAINTING, GENERAL.

PART 3 EXECUTION

3.1 INSTALLATION

Work shall be performed in accordance with the manufacturer's published diagrams, recommendations, and equipment warranty requirements. Where equipment is specified to conform to the requirements of ASME BPV VIII Div 1 and ASME BPV IX, the design, fabrication, and installation of the system shall conform to ASME BPV VIII Div 1 and ASME BPV IX.

3.1.1 Equipment

Refrigeration equipment and the installation thereof shall conform to ASHRAE 15. Necessary supports shall be provided for all equipment, appurtenances, and pipe as required, including frames or supports for compressors, condensers, and similar items. Compressors shall be isolated from the building structure. If mechanical vibration isolators are not provided, vibration absorbing foundations shall be provided. Each foundation shall include isolation units consisting of machine and floor or foundation fastenings, together with intermediate isolation material. Other floor-mounted equipment shall be set on not less than a 150 mm (6 inch) concrete pad doweled in place. Isolators shall be selected and sized based on load-bearing requirements and the lowest frequency of vibration to be isolated. Foundation drawings, bolt-setting information, and foundation bolts shall be furnished prior to concrete foundation construction for all equipment indicated or required to have concrete foundations. Concrete for foundations shall be as specified in Section 03300 CONCRETE FOR BUILDING CONSTRUCTION. Equipment shall be properly leveled, aligned, and secured in place in accordance with manufacturer's instructions.

3.1.2 Metal Ductwork

Installation shall be in accordance with SMACNA-06 unless otherwise indicated. Duct supports for sheet metal ductwork shall be in accordance with SMACNA-06, unless otherwise specified. Friction beam clamps indicated in SMACNA-06 will not be used. Supports on the risers shall allow free vertical movement of the duct. Supports shall be attached only to structural framing members and concrete slabs. Supports shall not be anchored to metal decking unless a means is provided and approved for preventing the anchor from puncturing the metal decking. Where supports are required between structural framing members, suitable intermediate metal framing shall be provided. Where C-clamps are used, retainer clips shall be provided.

3.1.3 Acoustical Duct Lining

Lining shall be applied in cut-to-size pieces attached to the interior of the duct with fire-resistant adhesive conforming to NFPA 90A and ASTM C916 Class 2. Top and bottom pieces shall lap the side pieces and shall be secured with welded pins, adhered clips of metal, nylon, or high impact plastic, and speed washers or welding cup-head pins installed in accordance with SMACNA-06. Welded pins, cup-head pins, or adhered clips shall not distort the duct, burn through, nor mar the finish or the surface of the duct. Pins and washers shall be flush with the surfaces of the duct liner and all breaks and punctures of the duct liner coating shall be sealed with fire-resistant adhesive conforming to ASTM C916, Class 1. Exposed edges of the liner at the duct ends and at other joints where the lining will be subject to erosion shall be coated with a heavy brush coat of fire-resistant adhesive, conforming to ASTM C916, Class 1, to prevent delamination of glass fibers. Duct liner may be applied to flat sheet metal prior to forming duct through the sheet metal brake. Lining at the top and bottom surfaces of the duct shall be additionally secured by welded pins or adhered clips as specified for cut-to-size pieces. Other methods indicated in SMACNA-06 to obtain proper installation of duct liners in sheet metal ducts, including adhesives and fasteners, will be acceptable.

3.1.4 Field Applied Insulation

Field applied insulation shall be as specified in Section 15250 THERMAL INSULATION FOR MECHANICAL SYSTEMS.

3.1.5 Factory Applied Insulation

Refrigerant suction lines between an evaporator and compressors and any cold gas inlet connections to gas cooled motors shall be insulated with not less than 19 mm (3/4 inch) thick unicellular plastic foam.

3.1.6 Framed Instructions

Framed instructions shall be framed under glass or laminated plastic and be posted where directed. Instructions shall include equipment layout, wiring and control diagrams, piping, valves and control sequences, and typed condensed operation instructions. The condensed operation instructions shall include preventative maintenance procedures, methods of checking the system for normal and safe operation, and procedures for safely starting and stopping the system. The instructions shall be posted before acceptance testing of the system.

3.2 TESTS

Tests shall be conducted in the presence of the Contracting Officer. Utilities for testing shall be provided as specified in the "SPECIAL CLAUSES". Water and electricity required for the tests will be furnished by the Government. Any material, equipment, instruments, and personnel required for the test shall be provided by the Contractor. The services of a qualified technician shall be provided as required to perform all tests and procedures indicated herein. Field tests shall be coordinated with Section 15990 TESTING, ADJUSTING, AND BALANCING OF HVAC SYSTEMS.

3.2.1 Ductwork Leak Tests

Ductwork leak test shall be performed for the entire air distribution system, including fans, coils, filters, etc. Test procedure, apparatus, and report shall conform to SMACNA-10. The maximum allowable leakage rate is 42.5 L/s (90 CFM). Ductwork leak test shall be completed with satisfactory results prior to applying insulation to ductwork exterior.

3.2.2 System Performance Tests

After the foregoing tests have been completed and before each refrigeration system is accepted, tests to demonstrate the general operating characteristics of all equipment shall be conducted by a registered professional engineer or an approved manufacturer's start-up representative experienced in system start-up and testing, at such times as directed. Tests shall cover a period of not less than 48 hours for each system and demonstrate that the entire system is functioning in accordance with the drawings and specifications. Corrections and adjustments shall be made as necessary and tests shall be re-conducted to demonstrate that the entire system is functioning as specified. Prior to acceptance, service valve seal caps and blanks over gauge points shall be installed and tightened. Any refrigerant lost during the system startup shall be replaced. If tests do not demonstrate satisfactory system performance, deficiencies shall be corrected and the system shall be retested.

3.3 CLEANING AND ADJUSTING

3.3.1 Ductwork

Prior to testing, inside of ducts, plenums, and casing shall be thoroughly cleaned of all debris and blown free of small particles of rubbish and dust and then vacuum cleaned before installing outlet faces. Temporary filters shall be provided for fans that are operated during construction. New filters shall be installed after all construction dirt has been removed from the building and the ducts, plenum, casings, and other items specified have been vacuum cleaned. Fans shall be adjusted to the speed indicated by the manufacturer to meet specified conditions.

3.3.2 Equipment

Equipment shall be wiped clean, with all traces of oil, dust, dirt, or paint spots removed. System shall be maintained in this clean condition until final acceptance. Bearings shall be lubricated with oil or grease as recommended by the manufacturer. Belts shall be tightened to proper tension. Control valves and other miscellaneous equipment requiring adjustment shall be adjusted to setting indicated or directed.

3.3.3 Testing, Adjusting, and Balancing

Testing, adjusting, and balancing shall be as specified in Section 15990 TESTING, ADJUSTING AND BALANCING OF HVAC SYSTEMS.

3.4 DEMONSTRATIONS

Contractor shall conduct a training course for the operating staff as designated by the Contracting Officer. The training period shall consist of a total 8 hours of normal working time and start after the system is functionally completed but prior to final acceptance tests. The field instructions shall cover all of the items contained in the operation and maintenance manuals as well as demonstrations of routine maintenance operations.

- - o O o - -

SECTION 15895

AIR SUPPLY, DISTRIBUTION, VENTILATION, AND EXHAUST SYSTEM

PART 1 GENERAL

1.1 REFERENCES

The publications listed below form a part of this specification to the extent referenced. The publications are referred to in the text by basic designation only.

AIR CONDITIONING AND REFRIGERATION INSTITUTE (ARI)

ARI 350	(1986) Sound Rating of Non-Ducted Indoor Air-Conditioning Equipment

AIR MOVEMENT AND CONTROL ASSOCIATION (AMCA)

AMCA 210	(1985) Laboratory Methods of Testing Fans for Rating
AMCA 300	(1985; Rev 1987; Errata) Reverberant Room Method for Sound Testing of Fans

AMERICAN NATIONAL STANDARDS INSTITUTE (ANSI)

ANSI S12.32	(1990) Precision Methods for the Determination of Sound Power Levels of Discrete-Frequency and Narrow-Band Noise Sources in Reverberation Rooms

AMERICAN SOCIETY FOR TESTING AND MATERIALS (ASTM)

ASTM A 123	(1989a) Zinc (Hot-Dip Galvanized) Coatings on Iron and Steel Products
ASTM A 525	(1991b) General Requirement for Steel Sheet, Zinc-Coated (Galvanized) by the Hot-Dip Process
ASTM A 780	(1994) Standard Practice for Repair of Damaged and Uncoated Areas of Hot-Dip Galvanized Coatings
ASTM B 117	(1990) Salt Spray (Fog) Testing
ASTM C 916	(1990) Adhesives for Duct Thermal Insulation
ASTM C 1071	(1991) Thermal and Acoustical Insulation (Glass Fiber, Duct Lining Material)
ASTM D 1654	(1992) Evaluation of Painted or Coated Specimens Subjected to Corrosive Environments
ASTM D 2000	(1990) Rubber Products in Automotive Applications
ASTM D 3359	(1992a) Measuring Adhesion by Tape Test

AMERICAN SOCIETY OF HEATING, REFRIGERATING AND AIR-CONDITIONING ENGINEERS (ASHRAE)

ASHRAE 68	(1986) Laboratory Method of Testing In-Duct Sound Power Measurement Procedures for Fans

ANTI-FRICTION BEARING MANUFACTURERS ASSOCIATION (AFBMA)

AFBMA 9	(1990) Load Ratings and Fatigue Life for Ball Bearings
AFBMA 11	(1990) Load Ratings and Fatigue Life for Roller Bearings

NATIONAL ELECTRICAL MANUFACTURERS ASSOCIATION (NEMA)

NEMA MG 1	(1993) Motors and Generators

NATIONAL FIRE PROTECTION ASSOCIATION (NFPA)

NFPA 70	(1993) National Electrical Code
NFPA 90A	(1993) Installation of Air Conditioning and Ventilating Systems

SHEET METAL AND AIR CONDITIONING CONTRACTORS' NATIONAL ASSOCIATION (SMACNA)

SMACNA-01	(1975) Accepted Industry Practice for Industrial Duct Construction
SMACNA-05	(1992) Fire, Smoke and Radiation Damper Installation Guide for HVAC Systems
SMACNA-06	(1985) HVAC Duct Construction Standards - Metal and Flexible
SMACNA-10	(1985) HVAC Air Duct Leakage Test Manual

UNDERWRITERS LABORATORIES (UL)

UL-01	(1993; Supple) Building Materials Directory
UL-03	(1993; Supple) Electrical Construction Materials Directory
UL-05	(1993; Supple) Fire Resistance Directory
UL 181	(1990; Rev Nov 1990) Factory-Made Air Ducts and Connectors
UL 214	(1993) Tests for Flame-Propagation of Fabrics and Films
UL 555	(1990; Rev thru Nov 1993) Fire Dampers
UL 705	(1984; Rev thru Sep 1993) Power Ventilators

1.2 COORDINATION OF TRADES

Ductwork, piping offsets, fittings, and accessories shall be furnished as required to provide a complete installation and to eliminate interference with other construction.

1.3 DELIVERY AND STORAGE

Equipment delivered and placed in storage shall be stored with protection from the weather, humidity and temperature variations, dirt and dust, or other contaminants.

1.4 SUBMITTALS

The following shall be submitted in accordance with Section 01300 SUBMITTAL DESCRIPTIONS:

SD-01 Data

Components and Equipment Data.

Manufacturer's catalog data shall be included with the detail drawings for the following items. The data shall be highlighted to show model, size, options, etc., that are intended for consideration. Data shall be adequate to demonstrate compliance with contract requirements for the following:

a. Ductwork Components

b. Air Systems Equipment

SD-04 Drawings

Air Supply, Distribution, Ventilation, and Exhaust Equipment.

Drawings shall consist of equipment layout including assembly and installation details and electrical connection diagrams; ductwork layout showing the location of all supports and hangers, typical hanger details, gauge reinforcement, reinforcement spacing rigidity classification, and static pressure and seal classifications. Drawings shall include any information required to demonstrate that the system has been coordinated and will properly function as a unit and shall show equipment relationship to other parts of the work, including clearances required for operation and maintenance.

SD-06 Instructions

Test Procedures.

Proposed test procedures ductwork leak test and performance tests of systems, at least 2 weeks prior to the start of related testing.

System Diagrams.

Proposed diagrams, at least 2 weeks prior to start of related testing. System diagrams that show the layout of equipment, piping, and ductwork, and typed condensed operation manuals explaining preventative maintenance procedures, methods of checking the system for normal, safe operation, and procedures for safely starting and stopping the system shall be framed under glass or laminated plastic. After approval, these items shall be posted where directed.

SD-07 Schedules

Test Schedules.

Proposed test schedules for ductwork leak test and performance tests, at least 2 weeks prior to the start of related testing.

SD-08 Statements

Similar Services.

Statement demonstrating successful completion of similar services on at least 5 projects of similar size and scope, at least 2 weeks prior to submittal of other items required by this section.

SD-09 Reports

Test Reports.

Test reports for the ductwork leak test and performance tests in booklet form, upon completion of testing. Reports shall document phases of tests performed including initial test summary, repairs/adjustments made, and final test results.

SD-19 Operation and Maintenance Manuals

Air Supply, Distribution, Ventilation, and Exhaust Manuals.

Six manuals listing step-by-step procedures required for system startup, operation, shutdown, and routine maintenance, at least 2 weeks prior to field training. The manuals shall include the manufacturer's name, model number, parts list, list of parts and tools that should be kept in stock by the owner for routine maintenance including the name of a local supplier, simplified wiring and controls diagrams, troubleshooting guide, and

recommended service organization (including address and telephone number) for each item of equipment. Each service organization submitted shall be capable of providing 4 hour on site response to a service call on an emergency basis.

PART 2 PRODUCTS

2.1 STANDARD PRODUCTS

Components and equipment shall be standard products of a manufacturer regularly engaged in the manufacturing of products that are of a similar material, design and workmanship. The standard products shall have been in satisfactory commercial or industrial use for 2 years before bid opening. The 2-year experience shall include applications of components and equipment under similar circumstances and of similar size. The 2 years must be satisfactorily completed by a product which has been sold or is offered for sale on the commercial market through advertisements, manufacturers' catalogs, or brochures. Products having less than a 2-year field service record will be acceptable if a certified record of satisfactory field operation, for not less than 6000 hours exclusive of the manufacturer's factory tests, can be shown. The equipment items shall be supported by a service organization.

2.2 ASBESTOS PROHIBITION

Asbestos and asbestos-containing products shall not be used.

2.3 NAMEPLATES

Equipment shall have a nameplate that identifies the manufacturer's name, address, type or style, model or serial number, and catalog number.

2.4 EQUIPMENT GUARDS AND ACCESS

Belts, pulleys, chains, gears, couplings, projecting setscrews, keys, and other rotating parts exposed to personnel contact shall be fully enclosed or guarded according to OSHA requirements.

2.5 ELECTRICAL WORK

Electrical motor-driven equipment specified shall be provided complete with motor, motor starter, and controls. Unless otherwise specified, electric equipment, including wiring and motor efficiencies, shall be according to Section 16415 ELECTRICAL WORK, INTERIOR. Electrical characteristics and enclosure type shall be as shown. Unless otherwise indicated, motors of 745 W (1 hp) and above shall be high efficiency type. Motor starters shall be provided complete with thermal overload protection and other appurtenances necessary. Each motor shall be according to NEMA MG 1 and shall be of sufficient size to drive the equipment at the specified capacity without exceeding the nameplate rating of the motor. Manual or automatic control and protective or signal devices required for the operation specified, and any control wiring required for controls and devices, but not shown, shall be provided.

2.6 CONTROLS

Thermostats shall be in accordance with Section 15566 WARM AIR HEATING SYSTEMS.

2.7 DUCTWORK COMPONENTS

Ductwork components shall be provided as specified in Section 15653 Air-Conditioning System (Unitary Type).

2.8 AIR SYSTEMS EQUIPMENT

2.8.1 Fans

Fans shall be tested and rated according to AMCA 210. Fans shall be connected to the motors indirectly with V-belt drive. V-belt drives shall be designed for not less than 150 percent of the connected driving capacity. Motor sheaves shall be variable pitch for 11 kW (15 hp) and below. Variable pitch sheaves shall be selected to drive the fan at a speed which will produce the specified capacity when set at the approximate midpoint of the sheave adjustment. Motors for V-belt drives shall be provided with adjustable rails or bases. Removable metal guards shall be provided for all exposed V-belt drives, and speed-test openings shall be provided at the center of all rotating shafts. Fan and motor assemblies shall be provided with vibration-isolation supports or mountings as indicated. Vibration-isolation units shall be standard products with published loading ratings. Each fan shall be selected to produce the capacity required at the fan static pressure indicated. Sound power level shall be as indicated. The sound power level values shall be obtained according to AMCA 300. Standard AMCA arrangement, rotation, and discharge shall be as indicated.

2.8.1.1 Centrifugal Fans

Centrifugal fans shall be fully enclosed, single-width single-inlet, or double-width double-inlet, AMCA Pressure Class I, II, or III as required or indicated for the design system pressure. Impeller wheels shall be rigidly constructed, accurately balanced both statically and dynamically. Fan blades may be forward curved, backward-inclined or airfoil design in wheel sizes up to 750 mm (30 inches.) Fan wheels shall be sparkproof construction. Fan blades for wheels over 750 mm (30 inches) in diameter shall be backward-inclined or airfoil design. Fan wheels 900 mm (36 inches) or less in diameter may have one or more extra long bearings between the fan wheel and the drive. Bearings shall be sleeve type, self-aligning and self-oiling with oil reservoirs, or precision self-aligning roller or ball-type with accessible grease fittings or permanently lubricated type. Grease fittings shall be connected to tubing and serviceable from a single accessible point. Bearing life shall be L50 rated at not less than 200,000 hours as defined by AFBMA 9 and AFBMA 11. Fan shafts shall be steel, accurately finished, and shall be provided with key seats and keys for impeller hubs and fan pulleys. Each fan outlet shall be of ample proportions and shall be designed for the attachment of angles and bolts for attaching flexible connections. Automatically operated outlet dampers shall be provided. Motors, unless otherwise indicated, shall not exceed 1800 rpm and shall have totally enclosed enclosures. Motor starters shall be manual type with NEMA 4X enclosure. Remote manual switch with pilot indicating light shall be provided where indicated.

2.8.1.2 In-Line Centrifugal Fans

In-line fans shall have centrifugal backward inclined blades, stationary discharge conversion vanes, internal and external belt guards, and adjustable motor mounts. Fans shall be mounted in a welded tubular casing. Air shall enter and leave the fan axially. Inlets shall be streamlined with conversion vanes to eliminate turbulence and provide smooth discharge air flow. Fan bearings and drive shafts shall be enclosed and isolated from the air stream. Fan bearings shall be sealed against dust and dirt and shall be permanently lubricated, and shall be precision self aligning ball or roller type. Bearing life shall be L50 rated at not less than 200,000 hours as defined by AFBMA 9 and AFBMA 11. Motors shall have open dripproof enclosure. Motor starters shall be manual with general-purpose enclosures. Remote manual switch with pilot indicating light shall be provided where indicated.

2.8.1.3 Centrifugal Type Power Roof Ventilators

Fans shall be V-belt driven with backward inclined, non-overloading wheel. Motor compartment housing shall be hinged or removable and weatherproof, constructed of heavy gauge aluminum. Fans shall be provided with birdscreen, disconnect switch, motorized dampers, roof curb,. Motors enclosure shall be dripproof type. Motor for PRV-2 shall be explosionproof. Lubricated bearings shall be provided.

2.9 FACTORY PAINTING

Units which are not of galvanized construction according to ASTM A 123 or ASTM A 525 shall be factory painted with a corrosion resisting paint finish. Internal and external ferrous metal surfaces shall be cleaned, phosphatized and coated with a paint finish which has been tested according to ASTM B 117, ASTM D 1654, and ASTM D 3359. Evidence of satisfactory paint performance for a minimum of 125 hours for units to be installed indoors and 500 hours for units to be installed outdoors shall be submitted. Rating of failure at the scribe mark shall be not less than 6, average creepage not greater than 3 mm. (1/8 inch.) Rating of the inscribed area shall not be less than 10, no failure. On units constructed of galvanized steel which have been welded, exterior surfaces of welds or welds that have burned through from the interior shall receive a final shop docket of zinc-rich protective paint according to ASTM A780.

PART 3 EXECUTION

3.1 INSTALLATION

Work shall be installed as shown and according to the manufacturer's diagrams and recommendations.

3.1.2 Flexible Connectors

Pre-insulated flexible connectors and flexible duct shall be attached to other components in accordance with the latest printed instructions of the manufacturer to ensure a vapor tight joint. Hangers, when required to suspend the connectors, shall be of the type recommended by the connector or duct manufacturer and shall be provided at the intervals recommended.

3.1.3 Sleeved and Framed Openings

Space between the sleeved or framed opening and the duct or the duct insulation shall be packed for fire rated penetrations. For non-fire rated penetrations, the space shall be packed as specified in Section 07920 CAULKING AND SEALANTS.

3.1.4 Metal Ductwork

Installation shall be according to SMACNA-06 unless otherwise indicated. Duct supports for sheet metal ductwork shall be according to SMACNA-06, unless otherwise specified. Friction beam clamps indicated in SMACNA-06 shall not be used. Supports on the risers shall allow free vertical movement of the duct. Supports shall be attached only to structural framing members and concrete slabs. Supports shall not be anchored to metal decking unless a means is provided and approved for preventing the anchor from puncturing the metal decking. Where supports are required between structural framing members, suitable intermediate metal framing shall be provided. Where C-clamps are used, retainer clips shall be provided.

3.1.6 Acoustical Duct Lining

Lining shall be applied in cut-to-size pieces attached to the interior of the duct with fire-resistant adhesive conforming to NFPA 90A and ASTM C916, Class 2. Top and bottom pieces shall lap the side pieces and shall be secured with welded pins, adhered clips of metal, nylon, or high impact plastic, and speed washers or welding cup-head pins installed according to SMACNA-06. Welded pins, cup-head pins, or adhered clips shall not distort

the duct, burn through, nor mar the finish or the surface of the duct. Pins and washers shall be flush with the surfaces of the duct liner and all breaks and punctures of the duct liner coating shall be sealed with fire-resistant adhesive conforming to ASTM C916, Class 1. Exposed edges of the liner at the duct ends and at other joints where the lining will be subject to erosion shall be coated with a heavy brush coat of fire-resistant adhesive, conforming to ASTM C916, Class 1, to prevent delamination of glass fibers. Duct liner may be applied to flat sheet metal prior to forming duct through the sheet metal brake. Lining at the top and bottom surfaces of the duct shall be additionally secured by welded pins or adhered clips as specified for cut-to-size pieces. Other methods indicated in SMACNA-06 to obtain proper installation of duct liners in sheet metal ducts, including adhesives and fasteners, will be acceptable.

3.1.7 Insulation

Thickness and application of insulation materials for ductwork, piping, and equipment shall be according to Section 15250 THERMAL INSULATION FOR MECHANICAL SYSTEMS.

3.1.8 Duct Test Holes

Holes with closures or threaded holes with plugs shall be provided in ducts and plenums as indicated or where necessary for the use of pitot tube in balancing the air system. Extensions, complete with cap or plug, shall be provided where the ducts are insulated.

3.1.9 Power Roof Ventilator Mounting

Foamed 13 mm (1/2 inch) thick, closed-cell, flexible elastomer insulation shall cover width of roof curb mounting flange. Where wood nailers are used, holes shall be pre-drilled for fasteners.

3.1.10 Power Transmission Components Adjustment

V-belts and sheaves shall be tested for proper alignment and tension prior to operation and after 72 hours of operation at final speed. Belts on drive side shall be uniformly loaded, not bouncing. Alignment of direct driven couplings shall be to within 50 percent of manufacturer's maximum allowable range of misalignment.

3.2 DUCTWORK LEAK TEST

Ductwork leak test shall be performed for the entire air distribution and exhaust system, including fans, coils, filters, etc. Test procedure, apparatus, and report shall conform to SMACNA-10. The maximum allowable leakage rate is 42.5 l/s (90 cfm). Ductwork leak test shall be completed with satisfactory results prior to applying insulation to ductwork exterior.

3.3 CLEANING AND ADJUSTING

Inside of ducts, plenums, and casing shall be thoroughly cleaned of debris and blown free of small particles of rubbish and dust and then shall be vacuum cleaned before installing outlet faces. Equipment shall be wiped clean, with traces of oil, dust, dirt, or paint spots removed. Temporary filters shall be provided prior to startup of all fans that are operated during construction. System shall be maintained in this clean condition until final acceptance. Bearings shall be properly lubricated with oil or grease as recommended by the manufacturer. Belts shall be tightened to proper tension. Control valves and other miscellaneous equipment requiring adjustment shall be adjusted to setting indicated or directed. Fans shall be adjusted to the speed indicated by the manufacturer to meet specified conditions.

3.4 TESTING, ADJUSTING, AND BALANCING

Testing, adjusting, and balancing shall be as specified in Section 15990 TESTING, ADJUSTING AND BALANCING OF HVAC SYSTEMS. Testing, adjusting, and

balancing shall begin only when the air supply and distribution, including controls, has been completed, with the exception of performance tests.

3.5 PERFORMANCE TESTS

After testing, adjusting, and balancing has been completed as specified, each system shall be tested as a whole to see that all items perform as integral parts of the system and temperatures and conditions are evenly controlled throughout the building. Corrections and adjustments shall be made as necessary to produce the conditions indicated or specified. Capacity tests and general operating tests shall be conducted by an experienced engineer. Tests shall cover a period of not less than 2 days for each system and shall demonstrate that the entire system is functioning according to the specifications.

3.6 FIELD TRAINING

The Contractor shall conduct a training course for operating and maintenance personnel as designated by the Contracting Officer. Training shall be provided for a period of 8 hours of normal working time and shall start after the system is functionally complete but prior to the performance tests. The field instruction shall cover all of the items contained in the approved Operating and Maintenance Instructions.

3.9 SEQUENCE OF CONTROLS

3.9.1 Packaged Air Conditioning Unit AHU-1

Air conditioning unit AHU-1 and PRV-1 shall be interlocked to operate together. AHU-1 shall operate as controlled by "On-Off-Auto" switch located in the mechanical room of the Control Building. When supply fan starts, outdoor air damper shall go to its minimum outdoor air setting of 525 cfm.

3.9.1.1 "On" Position

AHU-1 supply fan shall operate continuously. Outdoor air damper shall be at its minimum position and return air damper shall be open. PRV-1 shall operate continuously and its associated control damper shall be open.

3.9.1.2. "Off" Position

AHU-1 supply fan shall be deenergized. Outdoor air damper shall be closed and return air damper shall be open. PRV-1 shall be deenergized and its associated control damper shall be closed.

3.9.1.3 "Auto" Position

AHU-1 supply fan shall operate continuously. PRV-1 shall operate continuously and its associated control damper shall be open. Space temperature setpoint shall be maintained as follows:

a. When space temperature drops below heating setpoint, set at 68 degrees F (adjustable) by heating/cooling thermostat located in office, outdoor air damper shall close to its minimum position, return air damper shall open, and electric heating element stages shall operate to maintain space temperature.

b. When space temperature is above cooling setpoint, set at 78 degrees F (adjustable) by heating/cooling thermostat, outdoor air damper shall modulate open, return air damper shall modulate closed to maintain space temperature setpoint. When outdoor air temperature is above 72 degrees F (adjustable), outdoor air damper shall close to its minimum position, return air damper shall open, and AHU-1 air conditioning unit shall operate to maintain space temperature setpoint.

c. When fume hood exhaust fan, PRV-2, is in "On" position, minimum outdoor air setting for outdoor air damper shall be increased to 740 cfm.

3.9.2 Packaged Air Conditioning Unit AHU-2

AHU-2 shall operate as controlled by "On-Off-Auto" switch located in the pump room of the Blower Building. When supply fan starts, outdoor air damper shall be closed, return air damper shall be open.

3.9.2.1 "On" Position

AHU-2 supply fan shall operate continuously. Outdoor air damper shall be closed and return air damper shall be open.

3.9.2.2. "Off" Position

AHU-2 supply fan shall be deenergized. Outdoor air damper shall be closed and return air damper shall be open.

3.9.2.3 "Auto" Position

AHU-2 supply fan shall operate continuously. Space temperature setpoint shall be maintained as follows:

a. When space temperature drops below heating setpoint, set at 55 degrees F (adjustable) by heating/cooling thermostat located in electrical room, outdoor air damper shall close, return air damper shall open, and electric heating element stages shall operate to maintain space temperature.

b. When space temperature is above cooling setpoint, set at 80 degrees F (adjustable) by heating/cooling thermostat, outdoor air damper shall modulate open, return air damper shall modulate closed to maintain space temperature setpoint. When outdoor air temperature is above 70 degrees F (adjustable), outdoor air damper shall close, return air damper shall open, and AHU-2 air conditioning unit shall operate to maintain space temperature setpoint.

3.9.3 Power Roof Ventilator PRV-1

PRV-1 shall be interlocked to operate with its associated control damper and AHU-1. PRV-1 shall be controlled through an "On-Off-Auto" switch located in the mechanical room of the Control building.

3.9.3.1 "On" Position

PRV-1 shall operate continuously and its associated control damper shall be open.

3.9.3.2 "Off" Position

PRV-1 shall be deenergized and its associated control dampers shall be closed.

3.9.3.3 "Auto" Position

PRV-1 shall operate with AHU-1 supply fan. Control damper shall be open when fan is operating and closed when it is deenergized.

3.9.4 Power Roof Ventilator PRV-2 and Supply Fan SF-1

PRV-2 and SF-1 shall be interlocked to operate together. PRV-2 and SF-1 shall be controlled through one "On-Off" switch located on the fume hood in the Control Building. In the "On" position, PRV-2 and SF-1 shall operate continuously. In the "Off" position, PRV-2 and SF-1 shall be deenergized.

3.9.5 Power Roof Ventilators PRV-3 and PRV-4

PRV-3 and its associated control damper and PRV-4 and its associated control damper shall be interlocked to operate together with control damper

associated with Louver LV-1. PRV-3 and PRV-4 shall be controlled through one "On-Off-Auto" switch located in the pump room of the Blower Building.

3.9.5.1 "On" Position

PRV-3 and PRV-4 shall operate continuously, the control dampers associated with PRV-3 and PRV-4 shall be open, and the control damper associated with LV-1 shall be open.

3.9.5.2 "Off" Position

PRV-3 and PRV-4 shall be deenergized, the control dampers associated with PRV-3 and PRV-4 shall be closed, and the control damper associated with LV-1 shall be closed.

3.9.5.3 "Auto" Position

PRV-3 and PRV-4 shall be operated through a space mounted thermostat, set at 80 degrees F (adjustable), located in the blower room. When the space temperature is above the thermostat setpoint, the fans and dampers shall operate as described in the "On" position. When the space temperature is below the thermostat setpoint, the fans and dampers shall operate as described in the "Off" position.

3.9.6 Power Roof Ventilator PRV-5

PRV-5 and its associated control damper shall be interlocked to operate together with control damper associated with Louver LV-2. PRV-5 shall be controlled through an "On-Off-Auto" switch located in the pump room of the Blower Building.

3.9.6.1 "On" Position

PRV-5 shall operate continuously, the control damper associated with PRV-5 shall be open, and the control damper associated with LV-2 shall be open.

3.9.6.2 "Off" Position

PRV-5 shall be deenergized, the control damper associated with PRV-5 shall be closed, and the control damper associated with LV-2 shall be closed.

3.9.6.3 "Auto" Position

PRV-5 shall be operated through a space mounted thermostat, set at 80 degrees F (adjustable), located in the pump room. When the space temperature is above the thermostat setpoint, the fan and dampers shall operate as described in the "On" position. When the space temperature is below the thermostat setpoint, the fan and dampers shall operate as described in the "Off" position.

3.9.7 Power Roof Ventilator PRV-6

PRV-6 and its associated control damper shall be interlocked to operate together with control damper associated with Louver LV-3. PRV-6 shall be controlled through an "On-Off" switch located in the Chlorination/ Dechlorination Building.

3.9.7.1 "On" Position

PRV-6 shall operate continuously, the control damper associated with PRV-6 shall be open, and the control damper associated with LV-3 shall be open.

3.9.7.2 "Off" Position

PRV-6 shall be deenergized, the control damper associated with PRV-6 shall be closed, and the control damper associated with LV-3 shall be closed.

3.9.8 Exhaust Fan EF-1

EF-1 shall be controlled through an "On-Off" switch located near the stairwell at the Head Works. In the "On" position, EF-1 shall operate continuously. In the "Off" position, EF-1 shall be deenergized.

3.9.9 Unit Heater UH-1

UH-1 shall be controlled through a wall mounted thermostat located in the pump room of the Blower Building. Thermostat shall cycle unit fan and electric heating coils to maintain 55 degrees F (adjustable) space temperature. UH-1 shall have electrical power interrupted by a disconnect switch located near the unit.

3.9.10 Unit Heater UH-2

UH-2 shall be controlled through a wall mounted thermostat located in the Chlorination/Dechlorination Building. Thermostat shall cycle unit fan and electric heating coils to maintain 55 degrees F (adjustable) space temperature. UH-2 shall have electrical power interrupted by a disconnect switch located near the unit.

3.9.11 Unit Heater UH-3

UH-3 shall be controlled through a wall mounted thermostat located in the Chlorination/Dechlorination Building. Thermostat shall cycle unit fan and electric heating coils to maintain 55 degrees F (adjustable) space temperature. UH-3 shall have electrical power interrupted by a disconnect switch located near the unit.

3.9.12 Unit Heater UH-4

UH-4 shall be controlled through a wall mounted thermostat located in the Chlorination/Dechlorination Building. Thermostat shall cycle unit fan and electric heating coils to maintain 55 degrees F (adjustable) space temperature. UH-4 shall have electrical power interrupted by a disconnect switch located near the unit.

3.9.13 Unit Heater UH-5

UH-5 shall be controlled through a wall mounted thermostat located in the Chlorination/Dechlorination Building. Thermostat shall cycle unit fan and electric heating coils to maintain 55 degrees F (adjustable) space temperature. UH-5 shall have electrical power interrupted by a disconnect switch located near the unit.

- - o O o - -

SECTION 15990

TESTING, ADJUSTING AND BALANCING OF HVAC SYSTEMS

PART 1 GENERAL

1.1 REFERENCES

The publications listed below form a part of this specification to the extent referenced. The publications are referred to in the text by basic designation only.

AMERICAN SOCIETY OF HEATING, REFRIGERATING AND AIR CONDITIONING ENGINEERS (ASHRAE)

ASHRAE 111	(1988) Practices for Measurement, Testing, Adjusting and Balancing of Building Heating, Ventilation, Air-Conditioning and Refrigeration Systems

ASSOCIATED AIR BALANCE COUNCIL (AABC)

AABC MN-1	(1989; 5th Ed) National Standards for Testing and Balancing Heating, Ventilating, and Air Conditioning Systems

NATIONAL ENVIRONMENTAL BALANCING BUREAU (NEBB)

NEBB-01	(1991; 5th Ed) Procedural Standards for Testing-Adjusting-Balancing of Environmental Systems

NATIONAL FIRE PROTECTION ASSOCIATION (NFPA)

NFPA 90A	(1989) Installation of Air Conditioning and Ventilating Systems

SHEET METAL & AIR CONDITIONING CONTRACTORS' NATIONAL ASSOCIATION (SMACNA)

SMACNA-07	(1983; 1st Ed) HVAC Systems - Testing, Adjusting and Balancing

1.2 GENERAL REQUIREMENTS

The Contractor shall select AABC MN-1, NEBB-01, SMACNA-07 or ASHRAE 111 as the standard for providing testing, adjusting and balancing of air systems. The selected standard shall be used throughout the project. Testing, adjusting, and balancing shall be accomplished by a firm certified for testing and balancing by Associated Air Balance Council (AABC) or National Environmental Balancing Bureau (NEBB). Prior to testing, adjusting, and balancing, the Contractor shall verify that the systems have been installed and are operating as specified. Approved detail drawings and all other data required for each system and/or component to be tested shall be made available at the jobsite during the entire testing, adjusting and balancing effort. The Contractor shall verify that all balancing devices are properly installed to permit testing, adjusting and balancing and that all duct leakage tests have been completed prior to testing, adjusting and balancing. The Contracting Officer shall be notified in writing of all equipment, components, or balancing devices, that are damaged, incorrectly installed, or missing, as well as any design deficiencies that will prevent proper testing, adjusting, and balancing. Testing, adjusting, and balancing shall not commence until approved by the Contracting Officer. Instrumentation accuracy shall be in accordance with the standard selected in this paragraph.

1.3 INSTRUMENT ACCURACY REQUIREMENTS

All instrumentation shall be checked for accuracy before beginning testing, adjusting and balancing procedures. Instrument accuracy shall be in accordance with the standard selected in paragraph GENERAL REQUIREMENTS. Checks may be carried out against similar equipment maintained specifically for checking purposes or by the manufacturer or a recognized testing facility. All instrumentation used for testing shall be calibrated within 6 months of use. Pitot tubes and U-tube manometers do not require checking. In no case shall the instrumentation accuracy be less than specified by the instrument manufacturer. Any instrument falling out of calibration during the process of balancing and testing shall be recalibrated or removed from the site and replaced by a properly calibrated instrument. No instruments shall be allowed to remain on-site that are not in calibration.

1.4 SUBMITTALS

The following shall be submitted in accordance with Section 01300 SUBMITTAL DESCRIPTIONS:

SD-09 Reports

Testing and Balancing.

Three copies of a preliminary report, 30 days before balancing commences. The report shall be organized by specific systems and shall clearly identify each item of equipment to be tested, adjusted, and balanced. The appropriate test procedures and measurements to be taken for each item of equipment shall be listed. Instrument calibration records shall be provided on forms shown in AABC MN-1 or SMACNA-07. Manufacturer's specified accuracy shall be shown. The report shall include floor plans showing all measurement locations and types of measurements to be made. All related data necessary for testing, balancing, and adjusting, including fan curves and pump curves, shall be included. A system readiness checklist, similar to that shown in SMACNA-07, shall be included. The report shall contain a listing of the deficiencies of all systems to be tested, adjusted and balanced and the corrective action taken. The report shall contain a schedule for the testing and balancing. Six copies of the final report on forms shown in AABC MN-1 or SMACNA-07, 30 days after completion of the test and balance operation. Data shall be in a hard bound cover identifying the project name, location, date of submittal, name of Contractor, and a general title indicating the specific area and type of work, and shall be signed by a registered professional engineer, employed by the test and balance firm, who has a minimum of 2 years experience in testing, adjusting and balancing work. The final report shall include a summary describing test methods, test results, and major corrective actions taken. The report shall include as-tested floor plans showing all measurement locations and types of measurements made. The air handling unit data shall include a static pressure profile diagram, and pitot tube traverses where possible. Air distribution data shall include coded drawings which show the exact location of each air outlet. Data for heating and cooling coils shall include heat balance calculations.

All instruments that are recalibrated and brought back onto the jobsite after being found to be out of calibration shall have recalibration records submitted on forms shown in AABC MN-1 or SMACNA-07.

SD-13 Certificates

Qualification.

Qualification data, 90 days prior to testing and balancing operations. The test and balance firm shall be certified by the Associated Air Balance Council (AABC) or the National Environmental Balancing Bureau (NEBB). The lead balancing technician shall be qualified by AABC or NEBB and his qualification data shall include past experience on at least five similar projects.

PART 2 PRODUCTS (Not Applicable)

PART 3 EXECUTION

3.1 TESTING AND BALANCING

3.1.1 General

The facility shall be essentially complete with final ceiling, walls, windows, doors and partitions in place. Doors and windows surrounding each area to be balanced shall be closed during testing and balancing operations. Air systems shall be complete and operable with balancing dampers, ducting, diffusers, returns, and control components in place. Exhaust fans and fume hoods shall be operational. All measurements and adjustments shall be made using procedures described in standard selected in paragraph GENERAL REQUIREMENTS. Air motion and distribution from air terminals shall be as shown. Smoke tests may be used to demonstrate proper air distribution from air terminals. All data including deficiencies encountered and corrective action taken shall be recorded. If a system cannot be adjusted to meet the design requirements, the Contractor shall promptly notify the Contracting Officer in writing.

3.1.2 Air Systems

Clean filters shall be installed at the beginning of the testing, adjusting, and balancing effort. Each system shall be adjusted until all flow quantities are within plus ten percent and minus zero percent. Dampers shall be checked for tight shutoff. Air leakage around dampers shall be verified. Fire and smoke dampers shall be open. Fans shall be checked for correct direction of rotation and proper speed shall be verified. Fire and smoke dampers shall be tested at system design air flow to ensure proper closure in accordance with NFPA 90A and manufacturer's instructions prior to building occupancy.

3.1.2.1 General Balancing Methods

In addition to the requirements for specific systems, flows in supply, exhaust and return air systems shall be balanced using the methods in standard selected in paragraph GENERAL REQUIREMENTS. Throttling losses shall be limited. Air flow adjustments shall be made by first adjusting the fan speed to meet the design flow conditions. Fan speed adjustment may not be required for fan motors which are less than 746 W, (one horsepower,) or if throttling results in no greater than an additional 1/3 W (horsepower) draw above that required if the fan speed were adjusted. Flows and pressures shall be checked in all main risers and supply ducts at all supply, exhaust and return fan discharges. All flows shall be recorded before and after each adjustment.

3.1.2.2 Specific Systems

All special or additional procedures for testing and balancing shall be in accordance with the applicable requirements of the standard selected in paragraph GENERAL REQUIREMENTS. If a system has diversity, only the required quantity of wide open terminals shall be used to meet the design air flow.

3.1.3 Marking of Setting

Following final acceptance of certified reports by the Contracting Officer, the setting of all HVAC adjustment devices including splitters and dampers shall be permanently marked by the testing and balancing engineer so that adjustment can be restored if disturbed at any time.

3.1.4 Marking of Test Ports

The testing and balancing engineer shall permanently and legibly mark and identify the location points of the duct test ports. If the ductwork has exterior insulation, these markings shall be made on the exterior side of the ductwork insulation. All penetrations through ductwork and ductwork

insulation shall be properly sealed to prevent air leakage or loss of vapor barrier.

3.2 FUME HOODS

All tests and measurements shall be performed in accordance with AABC MN-1.

3.3 CONTROL SYSTEMS

Testing, adjusting, and balancing of the systems shall be coordinated with the control system installation. All control components shall be verified to be properly installed and operating as specified before proceeding with testing, adjusting, and balancing. Verification shall be in accordance with AABC MN-1.

- - o O o - -

SECTION 16195 - ELECTRICAL IDENTIFICATION

PART 1 GENERAL

1.1 SECTION INCLUDES

1.1.1 Nameplates.

1.1.2 Marking tags.

1.2 SUBMITTALS

1.2.1 Not required.

PART 2 PRODUCTS

2.1 NAMEPLATES (NP)

2.1.1 Colored face with white core.

2.1.2 Engraved to show white lettering.

2.1.3 Micarta, Gravoply, or Contracting Officer approved equivalent.

2.2 MARKING TAGS

2.2.1 Double layer aluminum laminated to tag board.

2.2.2 Weather resistant, manufactured for outdoor use.

2.2.3 Roundhole, punched with eyelet.

2.2.4 Attach with minimum 23 gauge, galvanized wire.

2.2.5 Kraftbilt Scot-Tags or Contracting Officer approved equivalent.

PART 3 EXECUTION

3.1 MOUNTING OF NAMEPLATES

3.1.1 On panel fronts, attach with screws. Elsewhere, attach with GE Clearseal.

3.1.2 Attach with edge parallel to edge of enclosure or plate.

3.2 RECEPTACLES AND LIGHTING SWITCHES

3.2.1 If called for by schedule, mount nameplate above plate of every receptacle and every switch.

3.2.2 Text:

3.2.2.1 Receptacles: Panelboard designation and circuit number(s). For example, "N3-2,4,6" or "UP1-3".

3.2.2.2 Switches: Circuit designation as above and description of lights controlled.

3.3 CAUTION NAMEPLATES

3.3.1 Color: Red for "caution" and "warning" type nameplates; black for other nameplate except where other colors are called for on the Drawings.

3.3.2 Character size: 1/8 inch minimum height.

3.3.3 Where nameplates are called for in other sections or on the Drawings, use nameplates that comply with this Section.

3.3.4 Install a red nameplate on each motor or other electrically controlled equipment that has maintained (two-wire), remote, or automatic control.

3.3.4.1 Character size: Caution: 3/8 inch characters; balance: 1/4 inch.

3.3.4.2 Text: CAUTION. THIS EQUIPMENT MAY START AUTOMATICALLY OR REMOTELY.

3.4 SCHEDULE

3.4.1 3.02 Nameplates required as shown of Drawings.

END OF SECTION

SECTION 16262 - AUTOMATIC TRANSFER SWITCHES

PART 1 - GENERAL

1.1 SUMMARY (Not Applicable)

1.2 REFERENCES

The publications listed below form a part of this specification to the extent referenced. The publications are referred to in the text by basic designation only.

FEDERAL STANDARDS (FED-STD)

FED-STD 595	(Rev B) Colors.

INSTITUTE OF ELECTRICAL AND ELECTRONICS ENGINEERS (IEEE)

IEEE C37.90.1	(1989) Surge Withstanding Capability (SWC) Test.

NATIONAL ELECTRICAL MANUFACTURERS ASSOCIATION (NEMA)

NEMA ICS 1	(1988; Rev 1 & 2) Industrial Controls and Systems.
NEMA ICS 2	(1988; Rev 1) Industrial Control Devices, Controllers and Assemblies.
NEMA ICS 4	(1983; R 1988) Terminal Blocks for Industrial Use.
NEMA ICS 6	(1988; Rev 1) Enclosures for Industrial Control and Systems.

NATIONAL FIRE PROTECTION ASSOCIATION (NFPA)

NFPA 70	(1993) National Electrical Code.
NFPA 110	(1988) Emergency and Standby Power Systems.

UNDERWRITERS LABORATORIES (UL)

UL 1008	(Mar 15, 1989, 4th Ed; Rev Mar 6, 1991) Automatic Transfer Switches.
UL 1066	(Jan 24, 1985; 1st Ed; Rev thru May 24, 1988) Low-Voltage AC & DC Power Circuit Breakers Used in Enclosures.

1.3 GENERAL REQUIREMENTS

1.3.1 Standard Product

Material and equipment shall be a standard product of a manufacturer regularly engaged in the manufacture of the product and shall essentially duplicate items that have been in satisfactory use for at least 2 years prior to bid opening. The experience used shall include applications of equipment and materials under similar circumstances and of the same design and rating as the switches specified. Equipment items shall be capable of being serviced by an organization that is, in the opinion of the Contracting Officer, reasonably convenient to the site.

1.3.2 Nameplates

Nameplates shall be made from a corrosion-resistant metal with not less than 1/4-inch tall raised or engraved characters. The nameplate shall be mounted to the front of the enclosure and shall comply with nameplate requirements covered by NEMA ICS 2.

1.4 SUBMITTALS

SD-04, Drawings

Switches

A one-line diagram of each ATS and BP/IS assembly and elementary, or schematic and wiring, diagram of the unit. An interface equipment connection diagram showing all conduit and wiring between the ATS and BP/IS and all other related equipment. Device and nameplate numbers and item numbers shown on the list of equipment and material shall appear on drawings wherever the item of equipment or material appears. The one-line diagram shall show interlocking provisions and cautionary notes, if any. Operating instructions shall be shown on the one-line diagram or separately, at the discretion of the Contractor. The manufacturer's approved operating instructions for the ATS shall be laminated in plastic and permanently secured to the cabinet where the operator can see them. The one-line and elementary or schematic diagram shall be laminated in plastic and permanently secured to the inside of the front enclosure door. Operating instructions for the BP/IS shall be located as required by UL 1008. Unless otherwise approved, the one-line and elementary or schematic diagrams shall appear on the same drawing.

SD-07, Schedules

Material, Equipment, and Fixture Lists; FIO.

A complete list of equipment and material proposed, containing an adequate description of each separate item of equipment or material recommended.

SD-09, Reports

Tests

Certified factory and field test reports, within 14 days following completion of the tests. Reports shall be certified and dated and shall demonstrate that the tests were successfully completed prior to shipment of the equipment.

SD-13, Certificates

Equipment and Materials

Evidence of a UL listing, or conformance with applicable NEMA standards. Certificates of compliance will be accepted as proof of compliance when equipment or materials are required to conform to UL standards or to be manufactured and/or tested by NEMA standards. Such certificates are not required if manufacturer's published data, submitted and approved, reflect a UL listing or conformance with applicable publications of NEMA. Proof of the listing by UL and conformance with the applicable publications, of NEMA do not relieve the Contractor of compliance with other provisions of these specifications.

Switching Equipment

Proof of listing by UL sufficient to demonstrate that the ATS conform to the specified requirements except as otherwise specified. Modification to a former UL listed ATS model shall require written UL approval of the modification. A copy of the written UL approval for modifications shall be included with the certified test reports specified. In lieu of the proof of listing by UL, the Contractor may have identical tests required by UL 1008, UL 1066 and by NEMA ICS 2 performed by a nationally recognized independent

testing laboratory. UL and NEMA or other certified test reports shall be included to demonstrate the sequence of laboratory testing and that the overload, endurance, and temperature rise tests were conducted in that specific sequence of tests. The certified test reports shall show the date, times and duration of the overload, endurance, and temperature tests, and that the unit under test was not de-energized during the test sequence. Other tests shall be conducted in the sequence shown in paragraph TESTING unless otherwise justified and approved. The certified test reports from the testing laboratory shall be signed by the person performing the test and an authorized representative of the testing laboratory. The report shall verify that the ATS was tested in accordance with procedures described in UL 1008, or as otherwise specified and are of the same model number and ampacity as the switches specified. The test report shall verify that the tested unit passed all tests without modification or repair during a test period of not more than 90 days. The 90-day period does not include the time required to perform additional testing necessary to demonstrate compliance with the withstand rating provisions of these specifications.

SD-19, Operation and Maintenance Manuals

Switching Equipment

Six complete copies of operating manual outlining the step-by-step procedures required for system startup, operation and shutdown. The manuals shall include the manufacturer's name, model number, service manual, parts list, and brief description of all equipment and basic operating features. The manufacturer's spare parts data shall be included in the instruction manuals and correlated with the respective item of equipment included as a component part of the switch assembly. Spare parts data shall include the recommended spare parts published by the manufacturer of the equipment. The source of supply and the current cost of recommended spare parts shall be indicated. Six complete copies of maintenance manual listing routine maintenance, possible breakdowns, repairs and troubleshooting guide. The manuals shall include simplified wiring and control diagrams for the system as installed.

PART 2 - PRODUCTS

2.1 AUTOMATIC TRANSFER SWITCH (ATS)

ATS shall be the electrically-operated type that is mechanically held in both operating positions. ATS shall be suitable for use in standby systems described in NFPA 70. ATS shall be UL listed unless the Contractor retains a nationally recognized independent testing laboratory to conduct tests as specified in paragraph SUBMITTALS, and test reports are approved as being equivalent of test results and certified test reports as those determined and reported by UL. ATS shall be the electrically-operated contactor type which shall be manufactured and tested in accordance with applicable requirements of IEEE C37.90.1, MIL-STD 461, MIL-STD 462, NEMA ICS 1, NEMA ICS 2, and UL 1008. ATS shall also conform to NFPA 110 except that the ATS shall not be equipped with either overload or fault current protective devices. ATS shall be designed and manufactured to prevent stops in an intermediate or neutral position during transfer by the use of electrical actuators and stored-energy mechanisms. ATS designed and manufactured to effect transfers by a walking-beam or a similar device to engage handles of circuit breakers to accomplish transfer between power sources are unacceptable. Each pole of the doublethrow ATS shall have separate contacts of a nonwelding type with switch contacts installed to permit viewing of the contacts without disassembly of the ATS or removal of the entire contact enclosure, or component parts of the ATS. ATS shall be rated for continuous duty at the continuous current rating specified. All rating data shall be shown on detail drawings, and shall equal or exceed those specified. Switches shall be adequately rated for the application indicated, and shall have the following characteristics:

a. Voltage: 480 volts ac.

b. Number of Phases: Three.

c. Number of Wires: Three.

d. Frequency: 60 Hz.

e. Number of Switched Poles: Three.

f. Type of Load: Total system load shown.

g. Continuous Phase or Main Current Rating: Equal to or exceed the rating shown but, in no case, less than 125 percent of the full load rating of the alternate power source.

h. ATS Withstand Rating (Fault Current Availability Rating): Rated to withstand an available fault or short-circuit current of 65,000 amperes, RMS symmetrical, at a power factor between 0.0 and approximately 0.20, for a duration of 0.5 cycles at a maximum voltage of 480 volts ac.

i. Overload Rating: 4800 amperes, RMS symmetrical.

j. Nonwelding of Contacts: Rated for nonwelding of contacts when used with the feeder overcurrent devices indicated on the drawings and with the available fault current specified herein.

k. Main Contacts: Contacts shall have a silver composition and shall be protected by approved arcing contacts.

l. The ATS will have surge voltage isolation and phase monitoring on each power source.

2.1.1 Override Time Delay

Time delay to override monitored source deviation shall be adjustable from 0.5 to 6 seconds and factory set at 1 second. The device shall detect and respond to a sustained voltage drop of 30 percent of nominal voltage between any two of the normal supply conductors and initiate transfer action to the alternate source and start the engine-driven generator set after the set time period. The pickup voltage shall be adjustable between 85 and 100 percent of nominal and factory set 90 percent. The dropout voltage shall be adjustable from 75 to 98 percent of the pickup value, and factory set at 80 percent of nominal voltage.

2.1.2 Transfer Time Delay

Time delay before transfer to the alternate power source shall be adjustable from 0 to 2 minutes and factory set at 0 minutes. The device shall monitor the frequency and voltage of the alternate power source and transfer when frequency and voltage is stabilized at or above 90 percent of rated values. The pickup voltage shall be adjustable from 85 to 100 percent of nominal, and factory set at 90 percent. The pickup frequency shall be adjustable from 90 to 100 percent of nominal and factory set at 90 percent.

2.1.3 Return Time Delay

Time delay before return transfer to the normal power source shall be adjustable from 030 minutes and factory set at 30 minutes. The time delay shall be automatically defeated upon loss or sustained undervoltage of the alternate power source, provided that the normal supply has been restored.

2.1.4 Auxiliary Contacts

Two normally open and two normally closed auxiliary switches shall operate when the transfer switch is connected to the normal power source, and two normally open and two normally closed switches shall operate when the transfer switch is connected to the alternate power source.

2.1.5 Supplemental Features

The ATS shall also be furnished with the following:

a. Engine start contact.

b. Alternate source monitor.

c. Test switch.

d. Close differential protection.

e. Time delay by-pass switch.

f. Manual return-to-normal switch.

g. Motor starter control will be provided by the Programmable Logic Controller.

2.1.6 Operator

A manual operator, conforming to the applicable provisions of UL 1008, shall be provided to permit manual operation of the ATS without opening the ATS enclosure, and incorporate features to prevent operation by other than authorized and qualified personnel. The ATS shall be designed for use of the manual operator under no load conditions in the usual instances, but with the capability of operation under load conditions when necessary.

2.1.7 Green Indicating Lights

A green indicating light shall supervise the normal power source and shall have a nameplate engraved NORMAL.

2.1.8 Red Indicating Lights

A red indicating light shall supervise the alternate power source and shall have a nameplate engraved ALTERNATE.

2.2 ENCLOSURE

ATS and accessories shall be in a free-standing, floor-mounted and ventilated unventilated NEMA ICS 6, Type 1, smooth sheet metal enclosure constructed in accordance with UL 1008. Gauge of the metal shall be not less than No. 14. Doors shall have suitable hinges, locking handle latch, and gasketed jambs. Enclosure shall be equipped with at least two approved size and type of grounding lugs for the purpose of grounding the enclosure using No. 4 AWG copper conductors to the facility ground system. Factory wiring within the enclosure and the Contractor's field wiring terminating within the enclosure shall comply with NFPA 70. If wiring is not color coded, wires shall be permanently tagged near the terminal at each end with the wire number shown on approved detail drawings. Terminal blocks shall conform to NEMA ICS 4. Terminal facilities shall be suitably arranged for entrance of external conductors from the bottom of the enclosure or from the top and bottom, as shown. Main switch terminals shall be of the pressure type and suitable for the termination of the external copper conductors shown.

2.2.1 Construction

Enclosure shall be constructed for convenient removal and replacement of contacts, coils, springs and control devices from the front without the disconnection of external power conductors or the removal or disassembly of major components.

2.2.2 Cleaning and Painting

Ferrous surfaces shall be cleaned and painted. Surfaces to be painted shall be free of all oil, grease, welding slag and spatter, mill scale, deleterious

corrosion, dirt and other foreign substances. Painting shall include at least one coat of rust-inhibiting primer and one coat of finish enamel. The rust-inhibiting primer shall be applied to a clean, dry surface as soon as practicable after cleaning. Painting shall be manufacturer's standard material and process except that the total dry film thickness shall be not less than 2.5 mils. Color of the finish coat may be the manufacturer's standard color, if approved, or No. 26314 Gray as specified in FED-STD 595. The finish shall be free from runs, sags, peelings or other defects.

2.3 TESTING

2.3.1 Laboratory Testing

Testing shall be completed on the ATS to be supplied under these specifications, or shall have been completed on a previous, randomly selected standard production ATS unit having the same model number and capacity as the ATS specified. Overload, endurance and temperature tests shall be conducted in that sequence and within the shortest practicable period of time on the same ATS without de-energization of that ATS under test. The test sequence for the ATS listed below shall be followed. No deviation will be granted that is less stringent. Approval will not be granted to deviate from the overload, endurance and temperature test sequence.

a. General

b. Normal Operation

c. Overvoltage

d. Undervoltage

e. Overload

f. Endurance

g. Temperature rise

h. Dielectric Voltage - Withstand

i. Contact Opening

j. Dielectric Voltage - Withstand (Repeated)

k. Withstand

l. Instrumentation and Calibration of High Capacity Circuits

m. Closings

n. Dielectric Voltage - Withstand (Repeated)

o. Strength of Insulating Base and Support

2.3.2 Factory Testing

In addition to other factory tests, each completely assembled ATS unit shall be subjected to dielectric and operational tests and withstand tests.

2.3.2.1 Dielectric Tests

Tests shall be performed in accordance with NEMA ICS 1. Wiring of each control panel shall be subjected to voltage surge tests as stipulated in IEEE C37.90.1. Impulse withstand rating tests shall be performed accordance with the requirements of NEMA ICS 1.

2.3.2.2 Operational Tests

Tests shall be performed and shall demonstrate that the operational sequence of each ATS unit conforms to the requirements of the specifications with regard to operating transfer time, voltage, frequency, and timing intervals.

PART 3 - EXECUTION

3.1 INSTALLATION

The ATS shall be installed as indicated and in accordance with approved manufacturer's instructions.

3.2 OPERATIONAL TESTING

Following completion of the installation of each ATS, the Contractor shall perform operational tests in accordance with the written instructions of the manufacturer after having made proper adjustments and settings to demonstrate that each ATS functions satisfactorily and as specified. The Contractor shall advise the Contracting Officer not less than 5 work days prior to the scheduled date or dates for operational testing, and shall provide certified field test reports to the Contracting Officer within 2 calendar weeks following successful completion of the operational tests. The test reports shall describe all adjustments and settings made and all operational tests performed.

- - o 0 o - -

SECTION 16263 - DIESEL-GENERATOR SET STATIONARY 100-2500 KW, WITH AUXILIARIES

PART 1 - GENERAL

1.1 SUMMARY - The Diesel-Generator set shall be a separate bid option.

1.2 REFERENCES

The publications listed below form a part of this specification to the extent referenced. The publications are referred to in the text by basic designation only.

AMERICAN NATIONAL STANDARDS INSTITUTE (ANSI)

ANSI C2	(1990) National Electrical Safety Code.
ANSI C12.11	(1987) Instrument Transformers for Revenue Metering, 10 kV BIL through 350 kV BIL (0.6 kV NSV through 69 kV NSV).

AMERICAN SOCIETY FOR TESTING AND MATERIALS (ASTM)

ASTM A 53	(1989a) Pipe, Steel, Black and Hot-Dipped, Zinc-Coated Welded and Seamless.
ASTM A 106	(1989) Seamless Carbon Steel Pipe for High-Temperature Service.
ASTM A 181	(1987) Forgings, Carbon Steel, for General-Purpose Piping.
ASTM A 234	(1989a) Piping Fittings of Wrought Carbon Steel and Alloy Steel for Moderate and Elevated Temperatures.
ASTM D 975	(1989a) Diesel Fuel Oils.

AMERICAN SOCIETY OF MECHANICAL ENGINEERS (ASME)

ASME-17	(1989; Addenda 1989) Boiler and Pressure Vessel Code; Section IX, Welding and Brazing Qualifications.
ASME B16.3	(1985) Malleable Iron Threaded Fittings, Classes 150 and 300.
ASME B16.5	(1988; Errata) Pipe Flanges and Flanged Fittings.
ASME B16.11	(1980) Forged Steel Fittings, Socket-Welding and Threaded.
ASME B31.1	(1989) Power Piping.

INSTITUTE OF ELECTRICAL AND ELECTRONICS ENGINEERS (IEEE)

IEEE C37.90	(1978; R 1982) Relays and Relay Systems Associated with Electric Power Apparatus.
IEEE C57.13	(1978; R 1986) Instrument Transformers.
IEEE Std 43	(1974; R 1985) Testing Insulation Resistance of Rotating Machinery.

IEEE Std 95	(1977; R 1982) Insulation Testing of Large AC Rotating Machinery with High Direct Voltage.
IEEE Std 115	(1983) Test Procedures for Synchronous Machines.

MANUFACTURERS STANDARDIZATION SOCIETY OF THE VALVE AND FITTINGS INDUSTRY (MSS)

MSS SP-58	(1988) Pipe Hangers and Supports - Materials, Design and Manufacture.
MSS SP-69	(1983) Pipe Hangers and Supports - Selection and Application.
MSS SP-80	(1987) Bronze Gate, Globe, Angle and Check Valves.

MILITARY STANDARDS (MIL-STD)

MIL-STD 461	(Rev C; Notice 1) Electromagnetic Emission and Susceptibility Requirements for the Control of Electromagnetic Interference.
MIL-STD 705	(Rev C) Generator Sets, Engine Driven Methods of Tests and Instructions.

NATIONAL ELECTRICAL MANUFACTURERS ASSOCIATION (NEMA)

NEMA AB 1	(1986; Rev 1) Molded Case Circuit Breakers and Molded Case Switches.
NEMA FU 1	(1986) Low Voltage Cartridge Fuses.
NEMA ICS 2	(1988; Rev 1) Industrial Control Devices, Controllers and Assemblies.
NEMA ICS 6	(1988; Rev 1) Enclosures for Industrial Control and Systems.
NEMA MG 1	(1987; Rev 1) Motors and Generators.
NEMA MG 2	(1989) Safety Standard for Construction and Guide for Selection, Installation and Use of Electric Motors and Generators.
NEMA SG 3	(1981) Low-Voltage Power Circuit Breakers.
NEMA SG 4	(1975; R 1980; Rev 1; Errata) Alternating Current High-Voltage Circuit Breakers.
NEMA SG 5	(1981) Power Switchgear Assemblies.

NATIONAL FIRE PROTECTION ASSOCIATION (NFPA)

NFPA 30	(1987) Flammable and Combustible Liquids.
NFPA 37	(1990) Installation and Use of Stationary Combustion Engines and Gas Turbines.
NFPA 70	(1990) National Electrical Code.

SOCIETY OF AUTOMOTIVE ENGINEERS (SAE)

SAE ARP 892	(Nov 1965) DC Starter-Generator, Engine.
SAE J537	(Jun 1986) Storage Batteries.

UNDERWRITERS LABORATORIES (UL)

UL 489	(Sep 15, 1986; 7th Ed; Rev thru Oct 24, 1990) Molded-Case Circuit Breakers and Circuit-Breaker Enclosures.
UL 1236	(Dec 23, 1986; 3rd Ed; Rev Apr 6, 1990) Battery Chargers.

1.3 SYSTEM DESCRIPTION

The engine-generator set shall be provided and installed complete and totally functional, with all necessary ancillary equipment to include air filtration, starting system, generator protection and isolation, instrumentation, lubrication, fuel system, cooling system, engine exhaust. Engine-generator set ratings shall be as follows:

Number of Sets	One
Rating	Standby
Fuel Type	No. 2-D
Output	350 kW
Power factor, lagging	0.8
Maximum speed	1800 rpm
Frequency	60 Hz
Voltage	480/277
Phase	3 phase, 4 wire
Overload capacity	10 percent of rated load for 1 hour in 12 consecutive hours
Type of excitation	permanent magnet
Maximum time to start (with a load equal to the maximum step load increase)	8 seconds
Elevation of installation	4200 feet above sea level
Maximum summer outdoor temperature	110 degrees F
Maximum summer indoor temperature	85 degrees F
Minimum winter outdoor temperature	0 degrees F
Minimum winter indoor temperature	60 degrees F
Engine Cooling type	water - cooled
Area Type	Industrial
Seismic Zone	1
Maximum Step Load Increase	100 percent rated capacity

Maximum Step Load Decrease	100 percent of rated capacity
Transient Loading Recovery Time	4 seconds

1.4 GENERAL REQUIREMENTS

1.4.1 Engine-Generator Set

Each set shall consist of one engine, one generator, and one exciter mounted, assembled, and aligned on one base; and all other necessary ancillary equipment which may be mounted separately. Sets having a capacity of 750 kW or smaller shall be assembled and attached to the base prior to shipping. Sets over 750 kW capacity may be shipped in sections. Each set shall be fully weatherproof, corrosion resistant, and provided in a fully weather-resistant enclosure. All set components shall be environmentally suitable for the locations shown and shall be the manufacturer's standard product/s offered in catalogs for commercial or industrial use. Any nonstandard products or components and the reason for their use shall be specifically identified in paragraph SUBMITTALS.

1.4.2 Nameplates

Each major component of this specification shall have the manufacturer's name, address, type or style, model or serial number and catalog number on a plate secured to the equipment. As a minimum, nameplates shall be provided for:

Engines	Battery charger
Generators	Relays
Exciters	Transformers (CT & PT)
Regulators	Day tanks
Pumps and pump motors	Radiators
Governors	Heaters
Battery	

1.4.3 Personnel Safety Devices

Exposed moving parts, parts that produce high operating temperatures, parts which may be electrically energized, and parts that may be a hazard to operating personnel shall be insulated, fully enclosed, guarded, or fitted with other types of safety devices. The safety devices shall be installed so that proper operation of the equipment is not impaired.

1.4.4 Verification of Dimensions

The premises shall be visited and all details of the work verified. The Contracting Officer shall be advised in paragraph SUBMITTALS of any discrepancies before performing any work.

1.4.5 Conformance to Codes and Standards

Where equipment is specified to conform to requirements of any code or standard such as UL, NEMA, etc., the design, fabrication and installation shall all conform to the code.

1.4.6 Welding

Welding shall be in accordance with qualifying procedures using performance qualified welders and welding operators. Procedures and welders shall be qualified in accordance with ASME-17. Welding procedures qualified by others, and welders and welding operators qualified by a previously qualified employer may be accepted as permitted by ASME B31.1. The Contracting Officer shall be notified 24 hours in advance of tests and the tests shall be performed at the work site if practical. The welder or welding operator shall apply his assigned symbol near each weld he makes as a permanent record. Structural members shall be welded in accordance with SECTION: 05055 - WELDING, STRUCTURAL.

1.5 SUBMITTALS

The following shall be submitted in accordance with SECTION: 01300 - SUBMITTALS:

SD-01 Data

Diesel-Generator Set

The generator capability curve showing generator kVA output capability (kW vs. kvar) for both leading and lagging power factors ranging from 0 to 1.0.

Equipment and Performance

A letter listing the following:

a. The maximum allowable inlet temperature of the coolant fluid.

b. The minimum allowable inlet temperature of the coolant fluid.

c. The maximum allowable temperature rise in the coolant fluid through the engine.

d. All Federal and local regulations and restrictions regarding the limits on engine emissions pertinent to this installation.

e. The magnitude of all monitored values which define alarm set points.

f. The minimum allowable inlet fuel temperature.

Manufacturer's Catalog

Manufacturer's standard catalog data describing and depicting each engine-generator set and all ancillary equipment in sufficient detail to demonstrate complete specification compliance.

Welding

A copy of qualifying procedures and a list of names and identification symbols of qualified welders and welding operators.

Spare Parts

A complete list of spare parts for each piece of equipment and a complete list of all material and supplies needed for continued operation. All lists shall include two supply sources and their current prices. Each list shall be separated into two parts, those elements recommended by the manufacturer to be replaced after 3 years of service, and the remaining elements.

Training

A letter giving the date proposed for conducting the on-site training course, the agenda of instruction, a description of the video taping service to be provided, and the kind and quality of the tape to be left with the Contracting Officer at the end of the instructional period.

SD-04 Drawings

Diesel-Generator Set

Drawings shall include the following:

a. Base-mounted equipment complete, with base and all attachments including anchor bolt template and recommended clearances for maintenance and operation.

b. Complete starting system.

c. Complete fuel system.

d. Complete cooling system.

e. Complete exhaust system.

f. Electric wiring of relays, breakers, and switches indicating applicable single line and wiring diagrams with written description of sequence of operation and the instrumentation provided.

g. The lubrication system complete, including piping, pumps, strainers, filters, electric heater, controls and wiring.

h. Location, type, and description of all vibration isolation devices for all applications.

i. The safety system. A detailed description of how it is to work shall be sent with the drawings. The drawings shall include wiring schematics, safety devices with a listing of their normal ranges, alarm and shutdown values (to include operation parameters such as pressures, temperatures voltages, currents, and speeds).

j. One-line schematic and wiring diagrams of the generator, exciter, regulator, governor, and all instrumentation.

k. Layout of each panel.

l. Mounting and support for each panel and major piece of electrical equipment.

SD-06 Instructions

Posted Instructions

Posted instructions including wiring and control diagrams showing the key mechanical and electrical control elements, and a complete layout of the entire system. They shall be weatherproof, laminated in plastic, framed, and posted where directed.

SD-08 Statements

Qualifications

Documentation to demonstrate that:

a. Each component manufacturer has a minimum of 10 years experience in the manufacture, assembly and sale of components used with stationary diesel engine-generator sets for commercial and industrial use.

b. The engine-generator set manufacturer/assembler has a minimum of 10 years experience in the manufacture, assembly and sale of stationary diesel engine-generator sets for commercial and industrial use.

c. The field engineer is qualified to perform the specified functions.

Welder Qualification

A letter listing the welder qualifying procedures for each welder, complete with all supporting data such as test procedures used, what was tested to, and a list of the names of all welders and their identification symbols.

Installation Procedures

A copy of the manufacturer's installation procedures and a detailed description of the manufacturer's recommended break-in procedure.

Listing of Product Installations

A list of five recent installations using each type of engine and generator proposed for use. Each component used as the basis for the durability and reliability certification shall be identified in the list. The list shall give the name of installations, completion dates, and name and telephone number of a point of contact.

Diesel-Generator

Drawings which accurately depict the as-built configuration of the installation, upon acceptance of the diesel-generator set installation.

SD-09 Reports

Inspections and Tests

Six complete reproducible copies of the factory inspection results on the checklist format specified in paragraph Factory Inspection.

Six complete reproducible copies of the factory test results in booklet form, including all plotted data curves, all test conditions, a listing of test equipment complete with calibration certifications, and all measurements taken.

Six complete reproducible copies of the on-site inspection and test results in booklet form, including all test conditions, a listing of test equipment complete with calibration certifications, and all measurements taken.

A listing of all proposed testing equipment to be used for all on-site tests and inspections. A detailed description of the engine manufacturer's procedures for factory tests.

Factory Test Dates

A letter giving notice of the proposed dates of all factory inspections and tests.

SD-13 Certificates

Existing Facilities

A durability and reliability certification letter from the manufacturer and assembler to prove that existing facilities are and have been successfully utilizing the same components proposed to meet this specification section in similar service. Certification may be based on components, i.e. engines used with different models of generators and generators used with different engines, and does not exclude annual technological improvements made by a manufacturer in his basic standard-model component on which experience was obtained, provided parts interchangeability has not been substantially affected and his current standard model meets all the performance requirements of this specification.

Engine and Generator

Certification:

That for each different set proposed to meet this specification the engine is capable of delivering the specified power on a standby-rated basis and that the mean time between overhauls is 15,000 operating hours with an 80 percent load factor. For each different set proposed to meet this specification, two like engines shall be cited that have performed satisfactorily in a stationary power plant, independent and separate from the physical location of the manufacturer's and assembler's facilities, for a minimum of two consecutive years in standby without any failure to start, including all periodic exercise. The certification shall state that for each engine and generator proposed to meet this specification there were no failures resulting in downtime for repairs in excess

of 72 hours or any failure due to overheating during two consecutive years of service. Like engines are of the same model, speed, bore, stroke, number and configuration of cylinders, and output power rating.

Site Visit

A site visit letter stating the date the site was visited and listing all discrepancies found.

Flywheel Balance

A flywheel balance certification letter stating that the flywheel has been statically and dynamically balanced and is capable of being rotated at 125 percent of rated speed without vibration or damage.

Vibration-Isolation

A vibration-isolation certification letter stating that the vibration isolation system limits the maximum vibration transmitted to the floor within the specified limits.

Regulatory Compliance

A regulatory compliance certification letter stating that where materials or equipment are specified to comply with requirements of UL, etc., written proof of such compliance has been obtained. (The label or listing of the specified agency, or a written certificate from an approved, nationally recognized testing organization equipped to perform such services, stating that the items have been tested and conform to the requirements and testing methods of the specified agency are acceptable as proof.)

Prototype Tests

A prototype test-result-availability certification letter stating which specified prototype test results are readily available upon request and which prototype tests will be added to the factory tests because they are not readily available.

Functional Facilities

A letter certifying that all facilities are complete and functional; that each system is fully functional; and that each item of equipment is complete, free from damage, adjusted, and ready for beneficial use.

Fuel Consumption

A letter certifying that engine fuel consumption for sets 300 kW to 999 kW, does not exceed a maximum of 0.575 pounds per kilowatt hour for full and 75 percent rated load and 0.600 pounds per kilowatt hour for 50 percent rated load on the basis of:

a. Net kW of the set corrected for engine auxiliaries that are electrically driven.

b. 19,350 Btu per pound high-heat value for fuel used.

c. Sea level operation.

d. Intake-air temperature not over 90 degrees F.

e. Barometric pressure of intake air not less than 28-1/4 inches of mercury.

SD-19 Operation and Maintenance Manuals

Diesel-Generator Set

Six complete reproducible copies of the operation manual outlining the step-by-step procedures required for system startup, operation and shutdown. The manual shall include the manufacturer's name, model number, and a description of all equipment, complete with basic operating features. Six complete reproducible copies of the maintenance manual listing routine maintenance procedures and a troubleshooting guide listing possible breakdowns and repairs for each piece of equipment. The manual shall include all factory service manuals, complete parts lists, simplified schematic diagrams of each system as installed, and the originals from which all posted instructions were made.

Six complete reproducible copies of the all final relay and protective device settings. The settings shall be recorded with the name of the company and individual responsible for their accuracy.

Special Tools and Filters

Two complete sets of all special tools required for maintenance. Special tools are those that only the manufacturer provides, for special purposes, or to reach otherwise inaccessible parts. The tools shall be supplied complete with a suitable tool box. Two complete sets of all filters. The filters shall be supplied in a suitable storage box.

1.6 STORAGE AND INSTALLATION

Proper protection of all material and equipment, before, during, and after installation is the Contractor's responsibility. All stored items shall be protected from the weather and contamination. During installation, piping and similar openings shall be capped to keep out dirt and other foreign matter.

PART 2 - PRODUCTS

2.1 MATERIALS AND EQUIPMENT

Materials and equipment shall be as specified herein.

2.1.1 Battery

a. Station: IEEE Std 484 for safety requirements, and IEEE Std 485 for sizing.

b. Starting: SAE J537.

c. Charger: UL 1236.

2.1.2 Electrical Protective and Control Devices

a. Cartridge Fuses, Low-Voltage: NEMA FU 1.

2.1.3 Filter Elements

Fuel-oil, Lubricating-oil, and Combustion-air, filter elements shall be manufacturer's standard.

2.1.4 Generator and Exciter

NEMA MG 1 and NEMA MG 2.

2.1.5 Instrument Transformers

ANSI C12.11.

2.1.6 Pipe (Sleeves, Fuel/Lube-Oil, Compressed Air, Coolant, and Exhaust)

ASTM A 53, or ASTM A 106 steel pipe. Pipe smaller than 2 inches shall be Schedule 80. Pipe 2 inches and larger shall be Schedule 40.

a. Flanges and Flanged Fittings: ASTM A 181, Class 60, or ASME B16.5, Grade 1, Class 150.

b. Pipe Welding Fittings: ASTM A 234, Grade WPB or WPC, Class 150 or ASME B16.11, 3000 lb.

c. Threaded Fittings: ASME B16.3, Class 150.

d. Valves: MSS SP-80, Class 150.

e. Gaskets: Manufacturer's standard.

2.1.7 Thermometer for Oil or Water Service

Flush-mounted dial with range to suit the service encountered and shall be standard with the manufacturer.

2.1.8 Pipe Hangers

MSS SP-58 and MSS SP-69.

2.1.9 Electrical Enclosures

NEMA ICS 6, type 1.

2.1.10 Pressure Gauges

Manufacturer's standard.

2.1.11 Electric Motors

Starting Motors: SAE ARP 892 - Manufacturers Standard.

2.1.12 Motor Controllers

NEMA ICS 2.

2.2 ENGINE

2.2.1 Type

Engines shall be two-cycle, naturally aspirated, or turbocharged and intercooled; or four cycle, turbocharged and not intercooled or turbocharged and intercooled; vertical in-line or vertical VEE type; designed for continuous duty, stationary service. Engine shall have a solid cast block or individually cast cylinders. Engine shall have a minimum of two cylinders and removable cylinder liners. Provide each engine designed and constructed to eliminate undue heating, vibration, and wear and be efficient and trouble free in operation. Engine shall be capable of operating on diesel fuel oil as specified above. Limiting characteristics of the engine shall be as follows:

BMEP VALUES	Without Inter or after-coolers	With Inter or after-coolers
2 cycle, turbocharged	150	175
4 cycle, turbocharged	175	211

Minimum cubic inch displacement of the engine shall not be less than the value calculated from the following equation.

$$\text{Displacement} = \frac{\text{BHP} \times \text{K}}{\text{BMEP} \times \text{rpm}}$$

Where BHP @ rated RPM must be a minimum of 1.5 times the KW rating.

K = 396,000 for 2 - cycle engines
K = 792,000 for 4 - cycle engines
BMEP = values specified above
RPM = 1800

2.2.2 Transient Load Capability

The engine shall be capable of receiving and responding to maximum step load changes within the transient loading recovery time as specified in paragraph SYSTEM DESCRIPTION.

2.2.3 Vibration Limitation+

A vibration-isolation system shall be installed between the floor and the base. The vibration-isolation system shall limit the maximum vibration transmitted to the floor, throughout a frequency range from the maximum expected down to 65 cycles per second, to a maximum of 0.0015 inches total amplitude.

2.3 FUEL SYSTEM

The entire fuel system shall conform to the requirements of NFPA 30 and NFPA 37.

2.3.1 Pumps

2.3.1.1 Main Pump

The main pump for each engine shall be engine driven, shall supply fuel at a rate of approximately 400 percent of the expected fuel consumption at 110 percent of full rated load, and shall meet the expected fuel consumption at all other operating conditions.

2.3.2 Strainer and Filter

One full-flow strainer and one full-flow filter shall be provided for each engine. The strainer and filter shall be readily accessible and capable of being changed without disconnecting the piping or disturbing other components. The strainer shall be located on the suction side of the main pump. The filter shall be located on the discharge side of the main pump, except when the pump and the high pressure injector equipment are contained in a common housing the fuel filter may be located between strainer and main pump. The strainer shall have a maximum opening of 0.007 inch (80 mesh). The strainer and filter shall have inlet and outlet connections plainly marked. An indicating differential pressure gauge shall be provided across the filter.

2.3.3 Relief/Bypass Valve

A relief/bypass valve shall regulate pressure in the fuel supply line, return excess fuel to a return line and prevent the build-up of excessive pressure in the fuel system.

2.3.4 Day Tank

Each engine shall have a day tank. Each day tank shall be provided with connections for fuel supply line, fuel return line, fuel overflow line, local fuel fill port, gauge, vent line, fill limit float switch assembly, alarm level sensing device, and drain line. A fuel return line cooler shall be provided as recommended by the manufacturer and assembler.

2.3.4.1 Capacity, Standby Rating

The day tank shall have capacity to supply fuel to the engine for an uninterrupted 2-hour period at 100 percent rated load without being refilled, including all fuel returned to other than the day tank.

2.3.4.2 Drain Line

The day tank drain line shall be equipped with a shutoff valve and be arranged to allow drainage into a bucket.

2.3.4.3 Local Fuel Fill

The local fuel fill port on the day tank shall have a screw-on cap.

2.3.4.4 Fuel Level Limit Devices

a. A Fill Level Float Switch Assembly Device shall be provided to:

(1) Start the supply of fuel into the day tank at the "Low" level mark, 30 percent volume remaining.

(2) Stop the supply of fuel into the day tank at the "High" level mark, 90 percent volume.

b. A separate level sensing device shall be provided to activate alarms.

2.3.4.5 Redundant Fuel Shutoff

An automatic shutoff valve on the fill line to the day tank and an automatic safety device to shut down the pump supplying fuel to the day tank shall be provided to stop the fuel flow into the day tank. The valve and safety device shall be activated at the "Overfill" level as defined in paragraph SAFETY SYSTEM, alarm setpoints and shall respond before any fuel can be forced out the fuel overflow line.

2.3.4.6 Arrangement

The day tank shall be positioned and arranged so that the fuel level in the day tank at the "No Fuel" level is above the suction port of the main pump. The overflow connection shall be positioned and arranged so that the highest possible fuel level in the day tank is below the fuel injectors.

2.3.5 Fuel Supply System

The fuel supply from the main storage of fuel to the day tank shall be as specified in SECTION: 13209 DIESEL FUEL STORAGE TANK.

2.4 LUBRICATION

Each engine shall have a separate lube-oil system conforming to NFPA 30 and NFPA 37. Each system shall be pressurized by engine-driven pumps. System pressure shall be regulated as recommended by the engine manufacturer. A pressure relief valve shall be provided on the crankcase. The system shall be readily accessible for service such as draining, refilling, etc. Each system shall permit addition of oil and have oil-level indication with the set operating. The system shall utilize an oil cooler as recommended by the engine manufacturer.

2.4.1 Strainer and Filter

One full-flow strainer and one full-flow filter shall be provided for each pump. The strainer and filter shall be readily accessible and capable of being changed without disconnecting the piping or disturbing other components. The strainer shall be located on the suction side of all pumps. The filter shall be located on the discharge side of each pump. The strainer shall have a maximum opening of 0.027 inch (24 mesh). The strainer and filter shall have inlet and outlet connections plainly marked. An indicating differential pressure gauge shall be provided across the filter.

2.4.2 Lube-Oil Sensors

Each engine shall be equipped with both an entering and leaving lube-oil temperature gauge.

2.5 COOLING

Each engine shall have its own cooling system. Each system shall operate fully automatically while its engine is running. The cooling system coolant shall use a combination of water and ethylene-glycol sufficient for freeze protection at the minimum winter outdoor temperature in paragraph SYSTEM DESCRIPTION and its subparagraphs. The maximum temperature rise of the coolant across each engine shall be no more than that recommended and submitted in paragraph SUBMITTALS.

2.5.1 Coolant Pumps

All coolant pumps shall be the centrifugal type. Each engine shall have an engine-driven primary pump. All secondary pumps shall be electric motor driven and have automatic controllers.

2.5.2 Radiator

The radiator shall be of a size and capacity to limit the maximum allowable temperature rise in the coolant across the engine to that recommended and submitted in paragraph SUBMITTALS for the maximum summer outdoor design temperature and site elevation. ~~The radiator shall be constructed of corrosion-resistant metals.~~ The radiator shall be pressure type incorporating a pressure valve, vacuum valve and a radiator cap. The radiator cap shall be designed for pressure relief prior to removal. The radiator and the entire cooling system shall be capable of withstanding a minimum pressure of 7 psig. The radiator shall be protected with a strong grille or screen guard. The radiator shall have at least two tapped holes. One tapped hole in the radiator shall be equipped with a drain cock, the rest shall be plugged.

2.5.3 Thermostatic Control Valves

A modulating type, thermostatic control valve shall be provided in the coolant system to maintain the coolant temperatures range submitted in paragraph SUBMITTALS.

2.5.4 Ductwork

Ductwork shall be as specified in SECTION: 15935 - VENTILATION AND EXHAUST SYSTEMS except that a flexible connection shall be used to connect the duct to the diesel engine radiator. Material for the connection shall be wire-reinforced glass. The connection shall be rendered practically airtight.

2.6 SPECIAL LIMITATIONS

2.6.1 Sound Limitations

Sound emitted from any generator-set component shall be within the following limitations:

Frequency Band (Hz)	Sound Level by Area Type (Decibels)	
	Industrial	Residential
20-75	87	81
75-150	77	71
150-300	70	64
300-600	64	58
600-1,200	61	55
1,200-2,400	60	54
2,400-4,800	60	54
4,800-10 kHz	62	56

2.7 AIR INTAKE EQUIPMENT

Filters and silencers shall be provided in locations that are convenient for servicing. The silencer shall be of the high-frequency filter type, located in the air intake system as recommended by the engine manufacturer. Silencer shall be capable of reducing the noise level at the air intake to a point below the maximum acceptable levels specified in paragraph Sound Limitations. A combined filter-silencer unit meeting requirements for the separate filter and silencer items may be provided. Expansion elements in air-intake lines shall be copper.

2.8 EXHAUST SYSTEM

The system shall be separate and complete for each engine. Piping shall be supported so as to minimize vibration. Where a V-type engine is provided, a V-type connector, with all necessary flexible sections and hardware, shall connect the engine exhaust outlets.

2.8.1 Flexible Sections and Expansion Joints

A flexible section shall be provided at each engine and an expansion joint at each muffler. Flexible sections and expansion joints shall have flanged connections. Flexible sections shall be made of convoluted seamless tube without joints or packing. Expansion joints shall be the bellows type. Expansion and flexible elements shall be stainless steel suitable for diesel-engine exhaust gas at 1000 degrees F. Expansion and flexible elements shall be capable of absorbing vibration from the engine and compensation for thermal expansion and contraction.

2.8.2 Exhaust Muffler

Provide a chamber type exhaust muffler. It shall be of welded steel and designed for outside mounting. Eyebolts, lugs, flanges, or other items shall be provided as necessary for support in the location and position indicated. Pressure drop through the muffler shall not exceed the recommendations of the engine manufacturer. Outside mufflers shall be zinc coated or painted with high temperature 200 degrees F resisting paint. The muffler shall be capable of reducing the noise level to a point below the maximum acceptable-area-type levels specified in paragraph Sound Limitations at a distance of 75 feet under 110 percent of full load and clear weather. Sound shall be measured with an approved ANSI Sound-Level Meter.

2.8.3 Exhaust Piping

Horizontal sections of exhaust piping shall be sloped downward away from the engine to a condensate trap and drain valve. Changes in direction shall be long radius. Exhaust piping, mufflers and silencers installed inside any building shall be insulated with double thickness and covered to protect personnel.

2.9 EMISSIONS

The finished installation shall comply with all Federal and local regulations and restrictions regarding the limits of emissions.

2.10 STARTING SYSTEM

2.10.1 General

An engine start-stop switch shall be provided with functions including reset, run/start, stop and automatic mode. Start-stop logic shall be provided for adjustable cycle cranking and cooldown operation. It shall be arranged for manual starting and fully automatic starting upon the failure of any phase of the normal power supply. The system shall be capable of providing a minimum of 4 cranking periods with 2-minute intervals between cranks. Each cranking period shall have a maximum duration of 30 seconds.

2.10.2 Electrical

An electrical starting system shall be provided to operate on a 24-volt dc system utilizing a negative circuit ground. The electrical starting system shall be provided with an adjustable cranking limit device to limit cranking periods from 10 seconds up to the maximum duration. It shall be of sufficient capacity, at the maximum outdoor summer temperature specified in paragraph Engine-Generator Set Rating to crank the engine without damage or overheating. All components shall be sized to withstand the seismic acceleration forces of the zone specified in paragraph Engine-Generator Set Ratings.

2.10.2.1 Battery

A starting battery system shall be provided and shall include the battery, battery rack, intercell connectors, spacers, automatic battery charger with overcurrent protection, metering and relaying. All critical system components (rack, protection, etc.) shall be sized to withstand the seismic acceleration forces of the zone specified in paragraph Engine-Generator Set Ratings. The battery shall be lead calcium type, with sufficient capacity, at the minimum outdoor winter temperature specified in paragraph Engine-Generator Set Rating to provide the specified cranking periods.

2.10.2.2 Battery Charger

A current-limiting battery charger shall be provided and shall automatically recharge the batteries. The charger shall be capable of an equalize-charging rate for recharging fully depleted batteries within 8 hours and a floating charge rate for maintaining the batteries at fully charged condition. An ammeter shall be provided to indicate charging rate. A timer shall be provided for the equalize-charging-rate setting.

2.10.2.3 Air Filter

An air filter, capable of removing particles 10 microns and larger, shall be installed upstream of the air connection to each engine.

2.10.3 Starting Aids

2.10.3.1 Glow Plugs

Glow plugs shall be designed to provide sufficient heat for combustion of fuel within the cylinders to guarantee starting at an ambient temperature of minus 25 degrees F.

2.10.3.2 Jacket-Coolant Heaters

A thermostatically controlled electric heater shall be mounted in the engine coolant jacketing to automatically maintain the coolant within plus or minus 3 degrees of the control temperature. The heater shall operate independently

of engine operation so that starting times are minimized and to prevent freezing when the engine-generator set is not being operated.

a. Standby Rated Sets

The control temperature shall be the higher of the temperature recommended by the engine manufacturer to meet the starting time specified in paragraph SYSTEM DESCRIPTION or the minimum winter outdoor temperature in paragraph SYSTEM DESCRIPTION.

2.10.4 Exerciser

A manually actuated device shall be provided to start, operate, and automatically stop the engine after 2 hours to permit periodic operation of the engine-generator set.

2.11 SAFETY SYSTEM

All devices, wiring, panels, etc. shall be provided and installed as a complete system to automatically activate the appropriate signals and initiate the appropriate actions. The safety system shall be provided with a self-test method to verify its operability. All alarm signals shall have manual acknowledgment and reset devices. The alarm signal systems shall reactivate for new signals after acknowledgment is given to any signal. The systems shall be configured such that loss of any monitoring device shall be dealt with as an alarm on that system element.

2.11.1 Audible Signal

The audible alarm signal shall sound at a frequency of 70 Hz at a volume of 75 dB. The sound shall be continuously activated upon alarm and silenced upon acknowledgment.

2.11.2 Visual Signal

The visual alarm signal shall be a panel light. The light shall be normally off, activated to be continuously lit upon alarm, and changed to blinking upon acknowledgment. If automatic shutdown occurs, the display shall maintain activated status to indicate the cause of failure.

2.11.3 Alarms and Action Logic

2.11.3.1 Shutdown

Simultaneous activation of the audible signal, activation of the visual signal, stopping the engine, and opening the generator main circuit breakers shall be accomplished.

2.11.3.2 Problem

Activation of the visual signal shall be accomplished.

2.11.4 Alarm Setpoints

The magnitude of all monitored values which define an alarm shall be as stated in paragraph SUBMITTALS. The following shall be utilized only if more stringent than the submitted values:

a. Overspeed (110 percent of rated speed).

b. Over/Under frequency (plus or minus 0.5 Hz.).

c. Overfill of day tank (95 percent volume).

d. No fuel in day tank (20 percent volume remaining).

e. Pre high lubricating-oil temperature (10 degrees F before shutdown).

f. Pre high coolant-fluid outlet temperature (10 degrees F lower than coolant-fluid outlet temperature).

2.11.5 Alarm Panel

The panel shall be as specified in paragraph PANELS and shall contain the following items:

Condition	Alarm
a. Activation of the manual emergency stop switch	Shutdown
b. Day tank overfill limit	Shutdown
c. Engine overspeed	Shutdown
d. High lubricating oil temperature	Shutdown
e. Low lubricating oil pressure	Shutdown
f. High coolant fluid outlet temperature	Shutdown
g. Prehigh coolant fluid outlet temperature	Problem
h. Prehigh lubricating oil temperature	Problem
i. Day tank no fuel limit	Problem
j. Low voltage of the starting battery	Problem
k. Failure to start within the specified time	Problem
l. Low coolant fluid outlet temperature	Problem
m. Over/Under frequency	Problem
n. Generator breaker tripped position indication	Problem

2.11.6 Time-Delay on Alarms

For start-up of the engine-generator set, time-delay devices shall be installed bypassing the low lubricating oil pressure alarm during cranking, and the low coolant-fluid outlet temperature alarm. The lube-oil time-delay device shall return its alarm to normal status after the engine starts. The coolant time-delay device shall return its alarm to normal status 5 minutes after the engine starts.

2.12 GOVERNOR

An isochronous governor shall be provided. It shall be the electronic-hydraulic type with electrical speed and load sensing with a manually adjustable bandwidth from 0.25 to 3 percent of rated frequency. The bandwidth shall be set at 0.25 percent of rated frequency. The governor shall be configured for safe manual adjustment during operation of the engine-generator set of the frequency setting without special tools, from 90 to 110 percent of the rated frequency.

2.12.1 Steady State Performance

The governor shall automatically maintain the generator output frequency within the specified bandwidth.

2.12.2 Transient Performance

The governor shall cause the engine-generator set to respond to maximum step-load changes within the transient loading recovery time as specified in paragraph SYSTEM DESCRIPTION to limit the maximum frequency variation to 5 percent of rated frequency.

2.13 ENGINE PANEL

The panel shall be as specified in paragraph PANELS and shall contain the following items:

a. Coolant-fluid inlet temperature display.

b. Coolant-fluid outlet temperature display.

c. Lubricating-oil pressure indicator.

d. Lubricating-oil inlet temperatures display.

e. Red emergency stop (push-button or switch).

f. Run-time meter.

g. Engine Run-off-remote switch.

h. Fuel meter display.

i. Tachometer display.

j. Alarm Panel.

2.14 GENERATOR

The generator shall be one bearing, engine-driven synchronous type directly connected to the engine and shall conform to NEMA MG 1. Frame shall be dripproof type. Bearings shall be of the sleeve, sealed-ball or spherical roller type. Insulation shall be Class H or Class F, and shall have a resistance of at least 1 megohm per 1000 volts of nominal operating voltage, at 40 degrees C. Rating shall be as in paragraph Engine-Generator Set Rating with a temperature rise as permitted in NEMA MG 1. Embedded detectors shall be used for determining temperature rise rating. The generator shall be equipped with an amortisseur winding. All generator phase leads shall be brought out to a terminal box. The telephone influence factor shall not exceed the limits of balanced TIF established by NEMA MG 1. A suitable generator-field discharge resistor shall be provided, if required by the generator manufacturer. Design shall protect against mechanical, electrical and thermal damage due to vibration, 25 percent over-speed, or voltages and temperatures at 10 percent overload. Machine balance of the generator shall comply with NEMA MG 1, Part 22. The generator and all ancillary equipment shall meet the short circuit requirements of NEMA MG 1.

2.14.1 Current Balance

At 100 percent rated load, and load impedance equal for each of the three phases, the permissible current difference between any two phases shall not exceed 2 percent of the largest current on either of the two phases.

2.14.2 Voltage Balance

At any balanced load between 75 and 100 percent of rated load, the difference in line-to-neutral voltage among the three phases shall not exceed 1 percent of the average line-to-neutral voltage. For a single-phase load condition, consisting of 25 percent load at unity power factor placed between any phase and neutral with no load on the other two phases, the maximum simultaneous difference in line-to-neutral voltage between the phases shall not exceed 3 percent of rated line to neutral voltage. The single-phase load requirement

shall be valid utilizing normal exciter and regulator control. The interpretation of the 25 percent load for single phase load conditions means 25 percent of the 100 percent 3- phase kW capacity of the generator.

2.14.3 Waveform

The deviation factor of the line-to-line voltage at zero load and at balanced full-rated load shall not exceed 10 percent. The RMS of all harmonics shall be less than 5.0 percent and that of any one harmonic less than 3.0 percent of the fundamental at full-rated load.

2.15 EXCITER

The generator exciter shall be of the brushless or permanent magnet type. Semiconductor rectifiers shall have a minimum safety factor of 300 percent for peak inverse voltage and forward current ratings for all operating conditions, including 110 percent generator output at 40 degrees C ambient. The exciter and regulator in combination shall maintain generator-output voltage within the limits specified.

2.16 VOLTAGE REGULATOR

A solid-state type voltage regulator, separate from the exciter, with a maximum droop of 3 percent of rated voltage over a load range from 0 to 100 percent of rated load shall be provided. The regulator shall have an operational bandwidth of 2 percent of rated voltage. The regulator shall be configured for safe manual adjustment of the engine-generator voltage output without special tools, during operation, from 90 to 110 percent of the rated voltage. Regulation drift shall not exceed plus or minus 1/2 percent for an ambient temperature change of 20 degrees C. Reactive droop compensation or reactive differential compensation shall load share the reactive load proportionally between sets during parallel operation.

2.16.1 Steady State Performance

The voltage regulator shall automatically maintain the generator output voltage within the specified operational bandwidth.

2.16.2 Transient Performance

The voltage regulator shall cause the engine-generator set to respond to maximum step load changes within the transient loading recovery time as specified in paragraph SYSTEM DESCRIPTION and its subparagraphs.

2.17 GENERATOR CONTROL AND PROTECTION

All devices necessary for electrical control, protection, and isolation of each generator shall be provided. The generator shall be protected by inherent design as provided in the NEC 445-4 (a) without the use of a circuit breaker, fuses, or other line voltage overcurrent protection device on the output. In addition, provide two (2) integral circuit breakers on the generator output as shown on the One-Line Diagram.

2.17.1 Automatic Transfer Switch

Automatic transfer switch shall be in accordance with SECTION: 16262 - AUTOMATIC TRANSFER SWITCHES.

2.18 GENERATOR PANEL

The panels shall be as specified in paragraph PANELS and shall provide controls, gauges, meters, and displays to include:

a. Voltage regulator control.

b. Ammeter, three-phase, with four-position selector switch.

c. Frequency meter, dial or digital type, with a range of 90 to 110 percent of rated frequency. Vibrating-reed type meters shall not be used.

d. AC Voltmeter, dial or digital type, three-phase, with four-position selector switch for the generator output.

2.19 PANELS

All instruments shall be calibrated using recognized industry calibration standards. Panels may be attached to the base by vibration/shock absorbing type mountings or adjacent to engine-generator set. Panels shall be mounted in or on the exciter-regulator cabinet. Instruments shall be mounted flush or semiflush. Convenient access to the back of all panels shall be provided to facilitate maintenance.

2.19.1 Electronic

Each panel shall be 100 percent solid state, state-of-the-art, microprocessor controlled to provide all specified functions. All control, logic, and function devices shall be compatible as a system, sealed, dust and water tight, and shall utilize modular components with metal housings and digital instrumentation. Data display shall utilize LED or back-lit LCD. Numeral height shall be 13 mm.

2.19.1.1 Displays

Continuous indication of the tachometer, lubricating-oil pressure, AC voltmeter, AC ammeter, frequency meter, and all safety system parameters shall be provided. A momentary switch shall be provided to initiate sequential display of all other parameters specified for all other panels. Additionally, the display shall provide indication of cycle programming and diagnostic codes for troubleshooting.

2.19.1.2 Interface Module

An interface module shall be provided to decode serial link data from the electronic panel and translate alarm, fault and status conditions to set of relay contacts.

2.20 AUTOMATIC ENGINE-GENERATOR-SET SYSTEM OPERATION

Engine-generator sets shall be provided with all relays, devices, wiring, etc. necessary for fully automatic operation. All devices shall be in enclosures suitable for the environment. When the normal supply voltage in any phase drops below a voltage setpoint in the adjustable range from 65 to 90 percent normal, and after an override time delay of 10 seconds nominal, an automatic operation shall begin. The engine-generator set shall automatically start, accelerate to the governed speed and build up to the regulated voltage. When the generator voltage reaches approximately 90 percent normal, automatic transfer switching of the load from normal source to the generator shall occur and the Programmable Logic Controller (PLC) will limit the loading of the generator. When the normal supply voltage is restored to the original setpoint for a time interval, adjustable from 5 to 30 minutes, the load shall be automatically switched from the engine-generator set to the normal supply and the engine-generator set shall automatically stop after a 5-minute no-load run with all devices reset to normal position, ready to repeat the automatic operation.

2.21 BASE

The base shall be constructed of structural steel. The base shall be designed to rigidly support the engine-generator set, ensure permanent alignment of all rotating parts, be arranged to provide easy access to allow changing of lube-oil, and ensure that alignment is maintained during shipping and normal operation. The base shall permit skidding in any direction during installation and shall be provided with suitable holes for foundation bolts, and shall also withstand and mitigate the affects of synchronous vibration of

the engine and generator. The base shall be provided with suitable holes for anchor bolts.

2.22 THERMAL INSULATION

Thermal insulation shall be as specified in SECTION: 15250 - THERMAL INSULATION FOR MECHANICAL SYSTEMS.

2.23 PAINTING AND FINISHING

The engine-generator set shall be cleaned, primed and painted in accordance with the manufacturer's standard color and practice.

2.24 FACTORY INSPECTION AND TESTS

Factory inspections and tests shall be performed on each engine-generator set proposed to meet this specification section. Each engine shall be broken in before being assembled into an engine-generator set. Each engine-generator set shall be run not less than 4 hours at full rated load prior to inspections. Inspections shall be completed and all necessary repairs made, prior to testing. The Contracting Officer may provide one or more representatives to witness all inspections and tests on a prototype similar to the required unit.

Inspectors shall look for leaks, looseness, defects in components, proper assembly, etc. and any item found to be in need of correction shall be noted as a necessary repair. The following checklist shall be used for the inspection:

		GOOD	BAD	NOTES
1.	Drive belts			
2.	Governor and adjustments			
3.	Engine timing mark			
4.	Starting motor			
5.	Starting aids			
6.	Coolant type and concentration			
7.	Radiator drains			
8.	Block coolant drains			
9.	Coolant fill level			
10.	All coolant line connections			
11.	All coolant hoses			
12.	Combustion air filter			
13.	Combustion air silencer			
14.	Lube oil type			
15.	Lube oil sump drain			
16.	Lube-oil filter			
17.	Lube-oil-level indicator			
18.	Lube-oil-fill level			
19.	All lube-oil line connections			
20.	All lube-oil lines			
21.	Fuel type and amount			
22.	All fuel-line connections			
23.	All fuel lines			
24.	Fuel filter			
25.	Coupling and shaft alignment			
26.	Voltage regulators			
27.	Battery-charger connections			
28.	All wiring connections			
29.	Instrumentation			
30.	Hazards to personnel			
31.	Base			
32.	Nameplates			
33.	Paint			
34.	Exhaust-heat recovery unit			

Each engine-generator set with dual-fuel operating capability shall have all tests performed using the primary fuel type. Tests 503.1b [and 630.1c] shall be run on each engine-generator set using the backup or secondary fuel. The following tests shall be performed on each engine-generator set.

2.24.1 Prototype Tests

If any test or performance failure occurs during the factory tests, field tests, or the warranty period, the Contracting Officer may request that the following prototype test results be provided:

Test	Method Test MIL-STD 705	Performance Criteria
Generator Synchronous Impedance Curve	411.1a	As proposed by generator mfg.
Generator Zero-Power Factor Saturation Curve	412.1a	As proposed by generator mfg.
Summation of Losses	415.0a	Losses listed in NEMA MG 1, paragraph 22.44
Direct-Axis Synchronous Reactance	421.1a	As proposed by generator mfg.
Negative sequence reactance and impedance test	422.1a	As proposed by generator mfg.
Zero sequence reactance	423.1a	As proposed by generator mfg.
Direct-axis transient Reactance	425.1a	As proposed by generator mfg.
Direct-axis subtransient reactance	426.1a	As proposed by generator mfg.
Direct-axis transient open-circuit time constant	430.1a	As proposed by generator mfg.
Short-circuit test (mechanical strength)	625.1c	NEMA MG 1, IEEE Std 115
Judging of commutation (ac units)	651.1c	As specified
Polarity Test for Field Poles	N/A	IEEE Std 115, paragraph 2.20
Short-Circuited Field Turns	N/A	IEEE Std 115, paragraph 2.15

PART 3 - EXECUTION

3.1 PIPING INSTALLATION

3.1.1 General

No section of pipe within a building shall exceed 20 feet in length between flanged fittings. Flanged fittings shall be utilized to allow for complete dismantling and removal of each piping system from the facility without disconnecting or removing any portion of any other system's equipment or piping. Connections to all equipment shall be made with flexible connectors. Changes in direction shall be made with fittings. All bending of pipe shall be done with pipe bender and no malformation shall be visible on bent pipe.

Pipes extending through the roof shall be properly flashed. Piping shall be installed clear of all windows, doors and openings, to permit thermal expansion and contraction without damage to joints or hangers; and shall be installed with a 1/2-inch drain valve at each low point.

3.1.2 Support

Hangers, inserts, and supports shall be of sufficient size to accommodate any insulation and shall conform to MSS SP-58 and MSS SP-69. Supports shall be spaced not more than 7 feet on center for pipes 2 inches in diameter or less, not more than 12 feet on center for pipes larger than 2 inches but smaller than 4 inches in diameter, and not more than 17 feet on center for pipes larger than 4 inches in diameter.

3.1.2.1 Ceiling and Roof

Exhaust piping shall be supported with appropriately sized Type-41 single pipe roll and threaded rods; all other piping shall be supported with appropriately-sized Type-1 clevis and threaded rods.

3.1.2.2 Wall

Wall supports for pipe shall be made by suspending the pipe from appropriately sized Type 33 brackets with the appropriate ceiling and roof pipe supports.

3.1.3 Flanged Joints

Flanges shall be 125-pound type, drilled, and of the proper size and configuration to match the exhaust outlet of the engine. Flanged joints shall be gasketed and made up square and tight.

3.1.4 Cleaning

After fabrication and before assembly, all piping interiors shall be manually wiped clean of all debris.

3.1.5 Pipe Sleeves

Pipes passing through construction such as ceilings, floors, or walls shall be fitted with sleeves. Each sleeve shall extend through and be securely fastened in its respective structure and shall be cut flush with each surface. The structure shall be built tightly to the sleeve. The inside diameter of each sleeve shall be minimum 1/2-inch, and where pipes pass through combustible materials 1 inch, larger than the outside diameter of the passing pipe or pipe covering.

3.2 ELECTRICAL INSTALLATION

Electrical installation shall comply with NFPA 70, and ANSI C2 and SECTION: 16415 - ELECTRICAL WORK, INTERIOR.

3.3 ON-SITE INSPECTION AND TESTS

Following tests shall be performed after the complete installation of each engine-generator set and its associated equipment. Data taken during runs shall be recorded in at least 15-minute intervals and shall include all electrical, pressure, and temperature information available.

3.3.1 Power Factor

All load runs shall be made at 0.8 power factor.

3.3.2 Contractor Supplied

The Contractor shall provide all equipment and supplies required for inspections and tests including fuel, test instruments, loadbanks at the specified power factors, etc.

3.3.3 Instruments

All panel gauges, meters, displays, instruments, etc. provided under this specification shall be verified during all test runs by test instruments of greater precision and accuracy. All test instruments shall be calibrated by a recognized standards laboratory within 30 days prior to testing.

3.3.4 Sequence

The following sequence shall be adhered to. Measurements shall be made and recorded of all parameters necessary to verify that each set meets all specified parameters. If the results of any step below are not satisfactory, the necessary readjustments, replacements, etc. shall be made, installed and/or performed and the step repeated until satisfactory results are obtained.

3.3.4.1 Piping Test

a. All lube-oil and fuel-oil piping shall be flushed with the same type of fluid intended to flow through the piping, until the outflowing fluid has no obvious sediment or emulsion.

b. All piping shall be pressure tested with air pressure at 150 percent of the maximum anticipated working pressure, but in no case less than 150 psig, for a period of 2 hours to prove the piping has no leaks. If piping is to be insulated, the test shall be performed before the insulation is applied.

3.3.4.2 Initial Inspection

a. All engine and generator mounting bolts shall be visually inspected and checked for proper application. Alignment of engine and generator shafts shall be inspected and checked by dial indicator to prove that no misalignment has occurred.

b. The engine-generator connection coupling shall be inspected and checked by dial indicator to prove that no misalignment has occurred. The dial indicator shall measure variation in radial positioning and axial clearance between the coupling halves. Readings shall be taken at 4 points, spaced 90 degrees apart. Solid couplings and pin-type flexible couplings shall be aligned within a total indicator reading of 0.0005 to 0.001 inch for both parallel and angular misalignment. For gear-type or grid-type couplings, 0.002 inch shall be acceptable. When engine and generator are skid-mounted, the skid shall not be relied upon to maintain alignment until grouted.

c. Generator-rotor air gap shall be inspected and checked to verify that it is adequate.

d. The function of the high and pre-high lubricating oil temperature circuit shall be demonstrated by removing the temperature-sensing elements from the engines and immersing the elements in a vessel containing controlled-temperature hot oil and recording the temperature at which it activates.

e. The function of the high and pre-high coolant-fluid outlet temperature circuit shall be demonstrated by removing the temperature-sensing elements from the engines and immersing the elements in a vessel containing controlled-temperature hot oil and recording the temperature at which it activates.

f. The function of the starting-battery low-voltage alarm circuit shall be demonstrated by disconnecting the starting-battery and charger and connecting a variable voltage source to the starting circuit. The voltage shall be decreased down to the low-voltage limit. The voltage at which the audible alarm sounds shall be recorded. The source shall be removed and the battery and the charger reconnected.

g. The function of the low coolant-fluid outlet temperature circuit shall be demonstrated by removing the temperature-sensing elements from the engines and immersing the elements in a vessel containing controlled-temperature hot oil and recording the temperature at which it activates.

3.3.4.3 Insulation Test

Prototype tests will include generator and exciter circuits insulation resistance and shall be tested with an insulation tester. Stator readings shall be taken at circuit breaker, to include generator leads to switchboard. All results of insulation resistance tests shall be recorded. Readings shall be within limits specified by the manufacturer. Mechanical operation, insulation resistance, protective relay calibration and operation, and wiring continuity of switchboard assembly shall be verified prior to starting engine operation for testing as specified herein. Precautions shall be taken to preclude damaging generator components during test.

3.3.4.4 Electrical Protective Device Tests

Protective devices shall be visually and mechanically inspected, adjusted, tested, and calibrated in accordance with the manufacturers published instructions. Device ratings, settings, and operation shall be documented.

3.3.4.5 Safety Run Test

a. Engine manufacturer's recommended prestarting checks and inspections shall be performed and recorded. Coolant fluid, fuel, and lube-oil levels shall be checked.

b. Start the engine, record the starting time, make and record all engine manufacturer's after-starting checks and inspections during a reasonable warm-up period.

c. Operate the engine generator-set for at least 2 hours at 75 percent of rated load.

d. Verify proper operation of all controls.

e. Verify proper operation and setpoints of all gauges and instruments.

f. Verify proper operation of all ancillary equipment.

g. Activate the manual emergency stop switch.

h. Start the engine, record the starting time, make and record all engine manufacturer's after-starting checks and inspections and operate the engine generator-set for at least 15 minutes at 75 percent of rated load.

i. Manually adjust the governor to increase engine speed past the overspeed limit. Record the RPM at which the engine shuts down.

j. Start the engine, record the starting time, make and record all engine manufacturer's after-starting checks and inspections and operate the engine generator-set for at least 15 minutes at 75 percent of rated load.

k. Manually fill the day tank to a level above the overfill limit. Record the level at which the engine shuts down. Drain the day tank down below the overfill limit.

l. Remove the time-delay low lube oil pressure alarm bypass and try to start the engine. Record the results. Attach a manifold to the engine oil system that allows oil to be manually drained off slowly.

m. Start the engine, record the starting time, make and record all engine manufacturer's after-starting checks and inspections and operate the engine generator-set for at least 15 minutes at 75 percent of rated load.

n. Manually drain off oil slowly to empty the engine to below the low lube-oil level limit and record the level at which the engine shuts down. Add oil back to the engine to fill it above the low level limit.

o. Start the engine, record the starting time, make and record all engine manufacturer's after-starting checks and inspections and operate the engine generator-set for at least 15 minutes at 100 percent of rated load. Record the maximum sound level from the engine at each of 8 different locations 45 degrees apart around a circle 75 feet in radius.

p. Manually add oil slowly to fill the engine to above the high lube-oil level limit and record the level at which the audible alarm sounds. Drain off oil to empty the engine down to the normal operating level.

q. Manually drain off fuel slowly from the day tank to empty it to below the no fuel level limit and record the level at which the audible alarm sounds. Add fuel back to the day tank to fill it above low level alarm limits.

3.3.4.6 Engine Load Run Test

The engine load run test shall be accomplished during July or August during daylight hours.

a. Perform and record all engine manufacturer's recommended prestarting checks and inspections. Include as a minimum checking coolant fluid, fuel, and lube-oil levels.

b. Start the engine, make and record all engine manufacturer's after-starting checks and inspections during a reasonable warmup period.

c. Operate the engine generator-set for 2 hours at 75 percent of rated load.

d. Increase load to 100 percent of rated load and operate the engine generator-set for 2-hours.

e. Increase load to 110 percent of rated load and operate the engine generator-set for 2-hours.

f. Decrease load to 0 and increase back to 100 percent of rated load in steps equal to the Maximum Step Load Increase specified in paragraph SYSTEM DESCRIPTION to verify frequency and voltage regulation, stability and transient response. Test by measuring frequency and voltage with high resolution high speed strip chart recorders and express the results as detailed in MIL-STD 705 method 608.1a.

g. Drop the entire load at once to verify frequency and voltage regulation, stability and transient response. Test by measuring frequency and voltage with high resolution high speed strip chart recorders and express the results as detailed in MIL-STD 705 method 608.1a.

h. Shut down the engine.

3.3.4.7 Final Inspection

a. Remove the lube oil filter and have the oil and filter examined by the engine manufacturer for excessive metal, abrasive foreign particles, etc. Any corrective action shall be verified for effectiveness by running the engine for 8 hours at full rated load, then re-examining the oil and filter.

b. Visually inspect and check all engine and generator mounting bolts for tightness and visible damage. Inspect and check alignment of engine and generator shafts by dial indicator to prove that no misalignment has occurred.

c. Inspect and check generator-rotor air gap to verify that it is adequate.

3.4 MANUFACTURER'S FIELD SERVICE

3.4.1 On-Site Training

The Contractor shall conduct training course for operating staff as designated by the Contracting Officer. The training period shall consist of a total 16 hours of normal working time and shall start after the system is functionally completed but prior to final acceptance. The course instructions shall cover pertinent points involved in operating, starting, stopping, servicing the equipment, as well as all major elements of the operation and maintenance manuals. Additionally, the course instructions shall demonstrate all routine maintenance operations such as oil change, oil filter change, air filter change, etc. A VHS format video tape of the entire training session shall be submitted.

3.4.2 Field Engineer

The Engine generator set manufacturer, or assembler shall furnish a qualified field engineer to supervise the {complete} installation of the engine generator set, assist in the performance of the on site tests and instruct personnel as to the operational and maintenance features of the equipment.

3.5 FIELD PAINTING

Field painting shall be as specified in SECTION: 09900 - PAINTING, GENERAL.

3.6 ACCEPTANCE

Final acceptance of the engine-generator set will not be given until the contractor has successfully completed all tests and all defects in installation material or operation have been corrected.

- o 0 o -

SECTION 16370

ELECTRICAL DISTRIBUTION SYSTEM, AERIAL

PART 1 GENERAL

1.1 REFERENCES

The publications listed below form a part of this specification to the extent referenced. The publications are referred to in the text by basic designation only.

AMERICAN NATIONAL STANDARDS INSTITUTE (ANSI)

ANSI C2	(1993) National Electrical Safety Code
ANSI C29.1	(1988) Electrical Power Insulators - Test Methods
ANSI C29.2	(1992) Insulators - Wet-Process Porcelain and Toughened Glass - Suspension Type
ANSI C29.3	(1986) Wet Process Porcelain Insulators - Spool Type
ANSI C29.4	(1989) Wet-Process Porcelain Insulators - Strain Type
ANSI C29.5	(1984; R 1991) Wet-Process Porcelain Insulators - Low- and Medium-Voltage Types
ANSI C29.6	(1984) Wet-Process Porcelain Insulators - High-Voltage Pin Type
ANSI C29.7	(1983; C29.7a) Wet-Process Porcelain Insulators - High-Voltage Line-Post Type
ANSI C29.8	(1985) Wet-Process Porcelain Insulators - Apparatus, Cap and Pin Type
ANSI C29.9	(1983) Wet-Process Porcelain Insulators - Apparatus, Post-Type
ANSI C37.32	(1990) High-Voltage Air Switches, Bus Supports, and Switch Accessories - Schedules of Preferred Ratings, Manufacturing Specifications, and Application Guide
ANSI C135.1	(1979) Galvanized Steel Bolts and Nuts for Overhead Line Construction
ANSI C135.2	(1987) Threaded Zinc-Coated Ferrous Strand-Eye Anchor Rods and Nuts for Overhead Line Construction
ANSI C135.4	(1987) Zinc-Coated Ferrous Eyebolts and Nuts for Overhead Line Construction
ANSI C135.14	(1979) Staples with Rolled or Slash Points for Overhead Line Construction
ANSI C135.17	(1988) Insulator Pins with Lead Threads for Overhead Line Construction
ANSI C135.22	(1988) Galvanized Ferrous Pole-Top Insulator Pins with Lead Threads for Overhead Line Construction
ANSI C135.30	(1988) Zinc-Coated Ferrous Ground Rods for Overhead or Underground Line Construction

ANSI C135.33	(1988) Crossarm Gains, Galvanized Ferrous
ANSI O5.1	(1992) Specifications and Dimensions for Wood Poles

AMERICAN SOCIETY FOR TESTING AND MATERIALS (ASTM)

ASTM A 36	(1994a) Carbon Structural Steel
ASTM A 123	(1989a) Zinc (Hot-Dip Galvanized) Coatings on Iron and Steel Products
ASTM A 153	(1982; R 1987) Zinc Coating (Hot-Dip) on Iron and Steel Hardware
ASTM A 475	(1989) Zinc-Coated Steel Wire Strand
ASTM A 575	(1989) Steel Bars, Carbon, Merchant Quality, M-Grades
ASTM A 576	(1990b) Steel Bars, Carbon, Hot-Wrought, Special Quality
ASTM B 1	(1990) Hard-Drawn Copper Wire
ASTM B 8	(1993) Concentric-Lay-Stranded Copper Conductors, Hard, Medium-Hard, or Soft
ASTM B 117	(1994) Operating Salt Spray (Fog) Testing Apparatus
ASTM B 228	(1993) Concentric-Lay-Stranded Copper-Clad Steel Conductors
ASTM B 230	(1989) Aluminum 1350-H19 Wire for Electrical Purposes
ASTM B 231	(1990) Concentric-Lay-Stranded Aluminum 1350 Conductors
ASTM B 232	(1992) Concentric-Lay-Stranded Aluminum Conductors, Coated-Steel Reinforced (ACSR)
ASTM B 398	(1990) Aluminum-Alloy 6201-T81 Wire for Electrical Purposes
ASTM B 399	(1992) Concentric-Lay-Stranded Aluminum-Alloy 6201-T81 Conductors
ASTM B 416	(1993) Concentric-Lay-Stranded Aluminum-Clad Steel Conductors
ASTM D 923	(1991) Sampling Electrical Insulating Liquids
ASTM D 1654	(1992) Evaluation of Painted or Coated Specimens Subjected to Corrosive Environment

AMERICAN WOOD-PRESERVERS' ASSOCIATION (AWPA)

AWPA C4	(1993) Poles - Preservative Treatment by Pressure Processes
AWPA C25	(1992) Sawn Crossarms - Preservative Treatment by Pressure Processes
AWPA P1/P13	(1991) Standard for Coal Tar Creosote for Land and Fresh Water and Marine (Coastal Water Use)
AWPA P5	(1993) Standards for Waterborne Preservatives

AWPA P8	(1993) Standards for Oil-Borne Preservatives
AWPA P9	(1992) Standards for Solvents and Formulations for Organic Preservative Systems

INSTITUTE OF ELECTRICAL AND ELECTRONIC ENGINEERS (IEEE)

IEEE C37.34	(1994) Test Code for High-Voltage Air Switches
IEEE C37.41	(1994) Design Tests for High-Voltage Fuses, Distribution Enclosed Single-Pole Air Switches, Fuse Disconnecting Switches, and Accessories
IEEE C62.1	(1989; R 1994) Surge Arresters for ac Power Circuits
IEEE C62.11	(1993) IEEE Standard Metal-Oxide Surge Arresters for AC Power Circuits
IEEE Std 81	(1983) Guide for Measuring Earth Resistivity, Ground Impedance, and Earth Surface Potentials of a Ground System (Part 1)
IEEE Std 100	(1992) IEEE Standard Dictionary of Electrical and Electronics Terms
IEEE Std 404	(1993) Cable Joints for Use with Extruded Dielectric Cable Rated 5000 V Through 46 000 V and Cable Joints for Use with Laminated Dielectric Cable Rated 2500 V Through 500 000 V

INSULATED CABLE ENGINEERING ASSOCIATION (ICEA)

ICEA S-70-547	(1992) Weather Resistant Polyolefin Covered Wire and Cable

NATIONAL ELECTRICAL MANUFACTURERS ASSOCIATION (NEMA)

NEMA HV 2	(1984; R 1991) Application Guide for Ceramic Suspension Insulators
NEMA LA 1	(1992) Surge Arresters
NEMA SG 2	(1993) High Voltage Fuses
NEMA WC 5	(1992; Rev 1-Dec 1993) Thermoplastic-Insulated Wire and Cable for the Transmission and Distribution of Electrical Energy
NEMA WC 7	(1993) Cross-Linked-Thermosetting-Polyethylene-Insulated Wire and Cable for the Transmission and Distribution of Electrical Energy
NEMA WC 8	(1993) Ethylene-Propylene-Rubber-Insulated Wire and Cable for the Transmission and Distribution of Electrical Energy

NATIONAL FIRE PROTECTION ASSOCIATION (NFPA)

NFPA 70	(1993) National Electrical Code

RURAL ELECTRIFICATION ADMINISTRATION (REA)

REA Bulletin 1728H-701	(1993) Wood Crossarms (Solid and Laminated), Transmission Timbers and Pole Keys

UNDERWRITERS LABORATORIES (UL)

UL 467	(1993) Grounding and Bonding Equipment

UL 486A	(1991; Rev Oct 1991) Wire Connectors and Soldering Lugs for Use with Copper Conductors
UL 486B	(1991; Rev thru Apr 1992) Wire Connectors for Use with Aluminum Conductors

1.2 GENERAL REQUIREMENTS

1.2.1 Terminology

Terminology used in this specification is as defined in IEEE Std 100.

1.3 SUBMITTALS

The following shall be submitted in accordance with Section 01300 SUBMITTAL PROCEDURES:

SD-01 Data

Manufacturer's Catalog.

Catalog cuts, brochures, circulars, specifications, product data, and printed information in sufficient detail and scope to verify compliance with the requirements of the contract documents.

Material, Equipment, and Fixture Lists.

A complete itemized listing of equipment and materials proposed for incorporation into the work. Each entry shall include the item number, the quantity of items proposed, and the name of the manufacturer of the item.

SD-04 Drawings

Electrical Distribution System.

Detail drawings consisting of equipment drawings, illustrations, schedules, instructions, diagrams and other information necessary to define the installation and enable the Government to check conformity with the requirements of the contract drawings. Detail drawings shall as a minimum include:

a. Poles.

b. Crossarms.

c. Pole top switches.

d. Conductors.

e. Insulators.

f. Surge arresters.

If departures from the contract drawings are deemed necessary by the Contractor, complete details of such departures shall be submitted with the detail drawings. Approved departures shall be made at no additional cost to the Government.

Detail drawings shall show how components are assembled, function together and how they will be installed on the project. Data and drawings for component parts of an item or system shall be coordinated and submitted as a unit. Data and drawings shall be coordinated and included in a single submission. Multiple submissions for the same equipment or system are not acceptable except where prior approval has been obtained from the Contracting Officer. In such cases, a list of data to be submitted later shall be included with the first submission. Detail drawings shall consist of the following:

a. Detail drawings showing physical arrangement, construction details, connections, finishes, materials used in fabrication, provisions for conduit or busway entrance, access requirements for installation and maintenance, physical size, electrical characteristics, foundation and support details, and equipment weight. Drawings shall be drawn to scale and/or dimensioned. Optional items shall be clearly identified as included or excluded.

Factory Test.

Certified factory test reports shall be submitted when the manufacturer performs routine factory tests, including tests required by standards listed in paragraph REFERENCES. Results of factory tests performed shall be certified by the manufacturer, or an approved testing laboratory, and submitted within 7 days following successful completion of the tests specified in applicable publications or in these specifications.

SD-13 Certificates

Materials and Equipment.

Where materials or equipment are specified to conform to the standards of the Underwriters Laboratories (UL) or to be constructed or tested, or both, in accordance with the standards of the American National Standards Institute (ANSI), the Institute of Electrical and Electronic Engineers (IEEE), or the National Electrical Manufacturers Association (NEMA), the Contractor shall submit proof that the items provided under this section of the specifications conform to such requirements. The label of, or listing by, UL will be acceptable as evidence that the items conform thereto. Either a certification or a published catalog specification data statement, to the effect that the item is in accordance with the referenced ANSI or IEEE standard, will be acceptable as evidence that the item conforms thereto. A similar certification or published catalog specification data statement to the effect that the item is in accordance with the referenced NEMA standard, by a company listed as a member company of NEMA, will be acceptable as evidence that the item conforms thereto. In lieu of such certification or published data, the Contractor may submit a certificate from a recognized testing agency equipped and competent to perform such services, stating that the items have been tested and that they conform to the requirements listed, including methods of testing of the specified agencies.

SD-19 Operation and Maintenance Manuals

Electrical Distribution System.

Six copies of Operation and Maintenance manuals, within 7 calendar days following the completion of tests and including assembly, installation, operation and maintenance instructions, spare parts data which provides supplier name, current cost, catalog order number, and a recommended list of spare parts to be stocked. Manuals shall also include data outlining detailed procedures for system startup and operation, and a troubleshooting guide which lists possible operational problems and corrective action to be taken. A brief description of all equipment, basic operating features, and routine maintenance requirements shall also be included. Documents shall be bound in a binder marked or identified on the spine and front cover. A table of contents page shall be included and marked with pertinent contract information and contents of the manual. Tabs shall be provided to separate different types of documents, such as catalog ordering information, drawings, instructions, and spare-parts data. Index sheets shall be provided for each section of the manual when warranted by the quantity of documents included under separate tabs or dividers.

Three additional copies of the instructions manual within 30 calendar days following the approval of the manuals.

1.4 DELIVERY, STORAGE, AND HANDLING

Devices and equipment shall be visually inspected by the Contractor when received and prior to acceptance from conveyance. Stored items shall be protected from the environment in accordance with the manufacturer's published instructions. Damaged items shall be replaced. Oil filled transformers and switches shall be stored in accordance with the manufacturer's requirements. Wood poles held in storage for more than 2 weeks shall be stored in accordance with ANSI O5.1. Handling of wood poles shall be in accordance with ANSI O5.1, except that pointed tools capable of producing indentations more than inch in depth shall not be used. Metal poles shall be handled and stored in accordance with the manufacturer's instructions.

1.5 EXTRA MATERIALS

One additional spare fuse or fuse element for each furnished fuse or fuse element shall be delivered to the contracting officer when the electrical system is accepted. Two complete sets of all special tools required for maintenance shall be provided, complete with a suitable tool box. Special tools are those that only the manufacturer provides, for special purposes (to access compartments, or operate, adjust, or maintain special parts).

PART 2 PRODUCTS

2.1 GENERAL REQUIREMENTS

Products shall conform to the following requirements. Items of the same classification shall be identical including equipment, assemblies, parts, and components.

2.2 STANDARD PRODUCT

Material and equipment shall be the standard product of a manufacturer regularly engaged in the manufacture of the product and shall essentially duplicate items that have been in satisfactory use for at least 2 years prior to bid opening.

2.3 NAMEPLATES

2.3.1 General

Each major component shall have the manufacturer's name, address, type or style, model or serial number, and catalog number on a nameplate securely attached to the equipment. Equipment containing liquid-dielectrics shall have the type of dielectric on the nameplate. Nameplates shall be made of noncorrosive metal. As a minimum, nameplates shall be provided for transformers, regulators, circuit breakers, capacitors, meters and switches.

2.4 CORROSION PROTECTION

2.4.1 Ferrous Metal Materials

2.4.1.1 Hardware

Ferrous metal hardware shall be hot-dip galvanized in accordance with ASTM A 153 and ASTM A 123.

2.4.1.2 Equipment

Equipment and component items, including but not limited to transformers and ferrous metal luminaires not hot-dip galvanized or porcelain enamel finished, shall be provided with corrosion-resistant finishes which shall withstand 480 hours of exposure to the salt spray test specified in ASTM B 117 without loss of paint or release of adhesion of the paint primer coat to the metal surface in excess of 1.6 mm (1/16 inch) from the test mark. The described test mark and test evaluation shall be in accordance with ASTM D 1654 with a rating of not less than 7 in accordance with TABLE 1,

(procedure A). Cut edges or otherwise damaged surfaces of hot-dip galvanized sheet steel or mill galvanized sheet steel shall be coated with a zinc rich paint conforming to the manufacturer's standard.

2.5 CONDUCTORS, CONNECTORS, AND SPLICES

2.5.1 Aluminum-Composition Conductors

All-aluminum-conductors, AAC, shall be alloy 1350-H19 and comply with ASTM B 230 and ASTM B 231. All-aluminum-alloy-conductors, AAAC, shall be alloy 6201-T81 and comply with ASTM B 398 and ASTM B 399. Aluminum-conductor-steel-reinforced, ACSR, shall comply with ASTM B 232.

2.5.2 Copper Conductors

Hard-drawn-copper conductors shall comply with ASTM B 1 and ASTM B 8 as appropriate for the conductor size.

2.5.3 Connectors and Splices

Connectors and splices shall be of copper alloys for copper conductors, aluminum alloys for aluminum-composition conductors, and a type designed to minimize galvanic corrosion for copper to aluminum-composition conductors. Aluminum-composition and aluminum-composition to copper shall comply with UL 486B, and copper-to-copper shall comply with UL 486A.

2.6 MEDIUM-VOLTAGE LINES

2.6.1 Bare Medium-Voltage Lines

Bare medium-voltage line conductors shall be all-aluminum-conductor, AAC; all-aluminum-alloy-conductor, AAAC; aluminum-conductor-steel-reinforced, ACSR; hard-drawn-copper, CU. Conductor types shall not be mixed on any project, unless specifically indicated. Conductors larger than No. 2 AWG shall be stranded.

2.6.2 Insulated Medium-Voltage Lines

Insulated medium-voltage line conductors shall be of the factory-assembled, messenger-supported type, having a rated circuit voltage of 5 kV, and a 133 percent insulation level. Insulation shall be cross-linked thermosetting polyethylene (XLP) conforming to NEMA WC 7 or ethylene-propylene-rubber (EPR) conforming to NEMA WC 8. Messengers shall be zinc-coated steel, aluminum-clad-steel, copper-clad-steel, or composite-copper and copper-clad steel.

2.7 POLES AND HARDWARE

Poles shall be of lengths and classes indicated.

2.7.1 Wood Poles

Wood poles shall comply with ANSI O5.1, and shall be pressure treated in accordance with AWPA C4, with creosote conforming to AWPA P1/P13 or with oil-borne preservatives and petroleum conforming to AWPA P8 and AWPA P9, respectively, and waterborne preservatives conforming to AWPA P5. Waterborne preservatives shall be either chromated or ammoniacal copper arsenate. Any species listed in ANSI O5.1 for which a preservative treatment is not specified in AWPA C4, shall not be used; northern white cedar, if treated as specified for western red cedar, and western fir, if treated as specified for Douglas fir, may be used. Wood poles shall have pole markings located approximately 3 m (10 feet) from pole butts for poles 15.2 m (50 feet) or less in length, and 4 m (14 feet) from the pole butts for poles longer than 16.8 m (55 feet) in length. Poles shall be machine trimmed by turning smooth full length, and shall be roofed, gained, and bored prior to pressure treatment. Where poles are not provided with factory-cut gains, metal gain plates shall be provided.

2.7.2 Pole Line Hardware

Zinc-coated hardware shall comply with ANSI C135.1, ANSI C135.2, ANSI C135.4, ANSI C135.14, ANSI C135.17, ANSI C135.22, and ANSI C135.33. Steel hardware shall comply with ASTM A 575 and ASTM A 576. Hardware shall be hot-dip galvanized in accordance with ASTM A 153. Pole-line hardware shall be hot-dip galvanized steel. Washers shall be installed under boltheads and nuts on wood surfaces and elsewhere as required. Washers used on through-bolts and double-arming bolts shall be approximately 57.2 mm square (2-1/4 inches square) and 4.8 mm (3/16 inch) thick. The diameter of holes in washers shall be the correct standard size for the bolt on which a washer is used. Washers for use under heads of carriage-bolts shall be of the proper size to fit over square shanks of bolts. Eye bolts, bolt eyes, eyenuts, strain-load plates, lag screws, guy clamps, fasteners, hooks, shims, and clevises shall be used wherever required to support and to protect poles, brackets, crossarms, guy wires, and insulators.

2.7.3 Guy Assemblies

Guy assemblies shall be zinc-coated steel in accordance with ASTM A 475. Guy assemblies, including insulators and attachments, shall provide a strength exceeding the required guy strength. Three-eye thimbles shall be provided on anchor rods to permit attachment of individual primary, secondary, and communication down guys. Anchors shall provide adequate strength to support all loads. Guy strand shall be 7 strand. Guy material shall be zinc-coated-steel extra-high-strength grade, except where two or more guys are used to provide the required strength. Guy rods shall be not less than 8 feet in length by 3/4 inch in diameter.

2.8 INSULATORS

Insulators shall comply with NEMA HV 2 for general requirements. Suspension insulators shall be used at corners, angles, dead-ends, other areas where line insulators do not provide adequate strength, and as indicated. Mechanical strength of suspension insulators and hardware shall exceed the rated breaking strength of the attached conductors.

2.8.1 Medium-Voltage Line Insulators

Medium-voltage line insulators shall comply with ANSI C29.2, ANSI C29.5, ANSI C29.6, and ANSI C29.7 as applicable. Ratings shall not be lower than the ANSI classes indicated in TABLE I. Horizontal line-post insulators shall be used for armless construction and shall have the same mechanical and electrical ratings as vertical line-post insulators for the ANSI class indicated, but shall be modified to be suitable for horizontal installation. Where line-post insulators are used for angles greater than 15 degrees, clamp-top fittings shall be provided as well as for other locations shown. Conductor clamps for use with clamp-top, line-post insulators shall be hot-dip galvanized malleable iron for copper conductors and aluminum alloy for aluminum-composition conductors. Either line-post or pin insulators may be used for crossarm construction. Pin insulators for use on voltages in excess of 6 kV phase-to-phase shall be radio-interference-freed or else line-post insulators shall be used.

TABLE I - MINIMUM ANSI RATING OF MEDIUM-VOLTAGE INSULATORS BY CLASS

Voltage Level	Line-Post	Pin	Suspension
Up to 5 kV	57-1 or 11	55-3	One 52-1
	57-1 or 11	55-5	Two 52-1

2.8.2 Strain Insulators for Guy Wires

Strain insulators for use in insulated guy assemblies shall comply with ANSI C29.4 for porcelain or equivalent fiberglass, and shall have a mechanical strength exceeding the rated breaking strength of the attached guy wire. Insulators shall be not smaller than Class 54-1 or 54-2 for lines up to 5 kV.

2.9 CROSSARM ASSEMBLIES

2.9.1 Crossarms

Crossarms shall comply with REA Bulletin 1728H-701 and shall be solid wood, distribution type, except cross-sectional area with pressure treatment conforming to AWPA C25, and a 6.4 mm (1/4 inch), 45 degree chamfer on all top edges. Cross-sectional area minimum dimensions shall be 108.0 mm (4-1/4 inches) in height by 82.6 mm (3-1/4 inches) in depth in accordance with ANSI C2 for Grade B construction. Crossarms shall be 2.4 m (8 feet) in length, except that 3.1 m (10 foot) crossarms shall be used for crossarm-mounted banked single-phase transformers or elsewhere as indicated. Crossarms shall be machined, chamfered, trimmed, and bored for stud and bolt holes before pressure treatment. Factory drilling shall be provided for pole and brace mounting, for four pin or four vertical line-post insulators, and for four suspension insulators, except where otherwise indicated or required. Drilling shall provide required climbing space and wire clearances. Crossarms shall be straight and free of twists to within 2.5 mm per 304.8 mm (1/10 inch per foot) of length. Bend or twist shall be in one direction only.

2.9.2 Crossarm Gains

Crossarm gains shall comply with ANSI C135.33.

2.10 FUSES AND SWITCHES, MEDIUM-VOLTAGE

2.10.1 Fused Cutouts

Medium-voltage fuses and cutouts shall comply with NEMA SG 2 and shall be of the loadbreak open type construction rated 15 kV and of the extra-heavy type. Open-link cut-outs are not acceptable. Fuses shall be either indicating or dropout type. Fuse ratings shall be as indicated. Fuse cutouts shall be equipped with mounting brackets suitable for the indicated installations.

2.10.2 Fused Switches

Fused switches shall be single-pole, manual devices with integral power fuses of the dropout type. Fuse ratings shall be as indicated. Each switch shall have a continuous current rating of 600 amperes rms, a momentary asymmetrical current rating of 40 kA rms and shall be rated for the voltage of the system in which it is installed.

2.10.3 Nonfused Switches

Nonfused switches shall be single-pole, manual devices with a continuous current rating of 600 amperes rms, a momentary asymmetrical current rating of 40 kA rms, and shall be rated for the voltage of the system in which it is installed.

2.11 SURGE ARRESTERS

Surge arresters shall comply with NEMA LA 1 and IEEE C62.1, IEEE C62.2, and IEEE C62.11, and shall be provided for protection of aerial-to-underground transitions, automatic circuit reclosers, capacitor equipment, group-operated load-interrupter switches, transformers and other indicated equipment. Arresters shall be distribution class, rated as shown. Arresters shall be equipped with mounting brackets suitable for the indicated installations. Arresters shall be of the metal-oxide varistor combination valve-metal-oxide varistor type suitable for outdoor installations.

2.12 GROUNDING AND BONDING

2.12.1 Driven Ground Rods

Ground rods shall be of copper-clad steel conforming to UL 467 not less than 19.1 mm (3/4 inch) in diameter by 3.1 m (10 feet) in length of the sectional type driven full length into the earth.

2.12.2 Grounding Conductors

Grounding conductors shall be bare, except where installed in conduit with associated phase conductors. Insulated conductors shall be of the same material as the phase conductors and green color-coded, except that conductors shall be rated no more than 600 volts. Bare conductors shall be ASTM B 8 soft-drawn unless otherwise indicated. Aluminum is not acceptable.

2.13 PADLOCKS

Padlocks shall comply with ASTM F 883.

2.14 FACTORY TESTS

Factory tests shall be performed, as follows, in accordance with the applicable publications and with other requirements of these specifications. The Contracting Officer shall be notified at least 10 days before the equipment is ready for testing.

a. High-Voltage Air Switches: Manufacturer's standard tests in accordance with IEEE C37.34 and IEEE C37.41.

b. High-Voltage Fuses: Manufacturer's standard tests in accordance with IEEE C37.41.

PART 3 EXECUTION

3.1 GENERAL INSTALLATION REQUIREMENTS

Equipment and devices shall be installed and energized in accordance with the manufacturer's published instructions. Circuits installed in conduits or underground and splices and terminations for medium-voltage cable shall conform to the requirements of Section 16375 ELECTRICAL DISTRIBUTION SYSTEM, UNDERGROUND. Secondary circuits installed in conduit on poles shall conform to the requirements of Section 16415 ELECTRICAL WORK, INTERIOR.

3.1.1 Conformance to Codes

The installation shall comply with the requirements and recommendations of NFPA 70 and ANSI C2 for medium loading districts, Grade B construction. No reduction in clearance shall be made.

3.1.2 Verification of Dimensions

The Contractor shall become familiar with details of the work, shall verify dimensions in the field, and shall notify the Contracting Officer of any discrepancy before performing any work.

3.2 POLE INSTALLATION

Joint-use electric/roadway-lighting poles for overhead electric and communication lines shall be wood poles utilizing crossarm construction. Crossarm construction shall be provided for support of other equipment, except where direct-pole mounting is indicated. Pole equipment mounts shall be used for steel and concrete poles and may be used for wood poles rather than crossarm equipment mounts. Detail drawings shall be submitted for approval. Provision for communication services is required on pole-line construction, except where specifically noted otherwise. A

vertical pole space of not less than 600 mm (2 feet) shall be reserved at all locations.

3.2.1 Wood Pole Setting

Wood Pole Setting: Wood poles shall be set straight and firm. In normal firm ground, minimum pole-setting depths shall be as listed in Table II. In rocky or swampy ground, pole-setting depths shall be decreased or increased respectively in accordance with the local utility's published standards and as approved. In swampy or soft ground, a bog shoe shall be used where support for a pole is required. Poles in straight runs shall be in a straight line. Curved poles shall be placed with curvatures in the direction of the pole line. Poles shall be set to maintain as even a grade as practicable. When the average ground run is level, consecutive poles shall not vary more than 1.5 m (5 feet) in height. When the ground is uneven, poles differing in length shall be kept to a minimum by locating poles to avoid the highest and lowest ground points. If it becomes necessary to shorten a pole, a piece shall be sawed off the top end and roofed. If any pole is shortened after treatment, the shortened end of the pole shall be given an application of hot preservative. Where poles are set on hilly terrain, along edges of cuts or embankments, or where soil may be washed out, special precautions shall be taken to ensure durable pole foundations, and the setting depth shall be measured from the lower side of the pole. Holes shall be dug large enough to permit proper use of tampers to the full depth of a hole. Earth shall be placed into the hole in 300 mm (6 inch) maximum layers, then thoroughly tamped before the next layer is placed. Surplus earth shall be placed around each pole in a conical shape and packed tightly to drain water away from poles.

TABLE II - MINIMUM POLE-SETTING DEPTH (FEET)

Length Overall Feet	Straight Lines	Curves, Corners, and Points of Extra Strain
20	5.0	5.0
25	5.5	5.5
30	5.5	5.5
35	6.0	6.0
40	6.5	6.5
45	6.5	7.0
50	7.0	7.5

3.3 CROSSARM MOUNTING

Crossarms shall be bolted to poles with 15.9 mm (5/8 inch) through-bolts with square washers at each end. Bolts shall extend not less than 3 mm (1/8 inch) nor more than 50 mm (2 inches) beyond nuts. On single crossarm construction, the bolt head shall be installed on the crossarm side of the pole. Metal crossarm braces shall be provided on crossarms. Flat braces may be provided for 2.4 m (8 foot) crossarms and shall be 6.4 by 31.8 mm (1/4 by 1-1/4 inches). Flat braces shall be bolted to arms with 9.5 mm (3/8 inch) carriage bolts with round or square washers between boltheads and crossarms, and secured to poles with 50.8 by 101.6 mm (1/2 by 4 inch) lag screws after crossarms are leveled and aligned. Angle braces are required for 3.1 m (10 foot) crossarms and shall be 1.5 m (60 inch) span by 457.2 mm (18 inch) drop formed in one piece from 38.1 by 38.1 by 4.8 mm (1-1/2 by 1-1/2 by 3/16 inch) angle. Angle braces shall be bolted to crossarms with 50.8 mm (1/2 inch) bolts with round or square washers between boltheads and crossarms, and secured to poles with 15.9 mm (5/8 inch) through-bolts. Double crossarms shall be securely held in position by means of 15.9 mm (5/8 inch) double-arming bolts. Each double-arming bolt shall be equipped with four nuts and four square washers.

3.3.1 Buck Arms

Buck arms shall be set at right angles to lines for straight runs. Double crossarms shall be provided at ends of joint use or conflict sections, and at dead-ends to provide adequate vertical and longitudinal strength.

3.3.2 Equipment Arms

Equipment arms shall be set parallel or at right angles to lines as required to provide climbing space. Equipment arms shall be located below line construction to provide necessary wire and equipment clearances.

3.4 GUY INSTALLATION

Guys shall be provided where shown, with loads and strengths as indicated, and wherever conductor tensions are not balanced, such as at angles, corners, and dead-ends. Where a single guy will not provide the required strength, two or more guys shall be provided. Where guys are wrapped around poles, at least two guy hooks shall be provided and pole shims shall be provided where guy tension exceeds 27 kN (6000 pounds). Guy clamps 152.4 mm (6 inches) in length with three 15.9 mm (5/8 inch) bolts, or offset-type guy clamps, or approved guy grips shall be provided at each guy terminal. Guy-strain insulators shall be provided in each guy for wood poles. Multiple-helix screw anchors shall be provided in marshy ground; rock anchors shall be installed in rock at right angles to guys, elsewhere anchors shall be of an expanding type, except that power installed screw anchors of equivalent holding power are acceptable. A half-round yellow polyvinyl, fiberglass, or other suitable plastic guy marker, not less than 2.4 m (8 feet) in length, shall be provided at the anchor end of each guy shown, securely clamped to the guy or anchor at the bottom and top of the marker. Holding capacities for down guys shall be based on a lead angle of 45 degrees.

3.5 CONDUCTOR INSTALLATION

3.5.1 Line Conductors

Unless otherwise indicated, conductors shall be installed in accordance with manufacturer's approved tables of sags and tensions. Proper care shall be taken in handling and stringing conductors to avoid abrasions, sharp bends, cuts, kinks, or any possibility of damage to insulation or conductors. Conductors shall be paid out with the free end of conductors fixed and cable reels portable, except where terrain or obstructions make this method unfeasible. Bend radius for any insulated conductor shall not be less than the applicable NEMA specification recommendation. Conductors shall not be drawn over rough or rocky ground, nor around sharp bends. When installed by machine power, conductors shall be drawn from a mounted reel through stringing sheaves in straight lines clear of obstructions. Initial sag and tension shall be checked by the Contractor, in accordance with the manufacturer's approved sag and tension charts, within an elapsed time after installation as recommended by the manufacturer.

3.5.2 Connectors and Splices

Connectors and splices shall be mechanically and electrically secure under tension and shall be of the nonbolted compression type. The tensile strength of any splice shall be not less than the rated breaking strength of the conductor. Splice materials, sleeves, fittings, and connectors shall be noncorrosive and shall not adversely affect conductors. Aluminum-composition conductors shall be wire brushed and an oxide inhibiter applied before making a compression connection. Connectors which are factory-filled with an inhibiter are acceptable. Inhibiters and compression tools shall be of types recommended by the connector manufacturer. Primary line apparatus taps shall be by means of hot line clamps attached to compression type bail clamps (stirrups). Low-voltage connectors for copper conductors shall be of the solderless pressure type. Noninsulated connectors shall be smoothly taped to provide a waterproof insulation equivalent to the original insulation, when installed on

insulated conductors. On overhead connections of aluminum and copper, the aluminum shall be installed above the copper.

3.5.3 Conductor-To-Insulator Attachments

Conductors shall be attached to insulators by means of clamps, shoes or tie wires, in accordance with the type of insulator. For insulators requiring conductor tie-wire attachments, tie-wire sizes shall be as indicated in TABLE II.

TABLE II - TIE-WIRE REQUIREMENTS

CONDUCTOR Copper (AWG)	TIE WIRE Soft-Drawn Copper (AWG)
6	8
4 and 2	6
1 through 3/0	4
4/0 and larger	2

AAC, AAAC, or ACSR (AWG)	AAAC OR AAC (AWG)
Any size	6 or 4

3.5.4 Armor Rods

Armor rods shall be provided for AAC, AAAC, and ACSR conductors. Armor rods shall be installed at supports, except armor rods will not be required at primary dead-end assemblies if aluminum or aluminum-lined zinc-coated steel clamps are used. Lengths and methods of fastening armor rods shall be in accordance with the manufacturer's recommendations. For span lengths of less than 61 m, (200 feet,) flat aluminum armor rods may be used. Flat armor rods, not less than 762.0 micrometers by 6.4 mm (0.03 by 0.25 inch) shall be used on No. 1 AWG AAC and AAAC and smaller conductors and on No. 5 AWG ACSR and smaller conductors. On larger sizes, flat armor rods shall be not less than 1.3 by 7.6 mm (0.05 by 0.30 inches). For span lengths of 61 m (200 feet) or more, preformed round armor rods shall be used.

3.5.5 Medium-Voltage Insulated Cables

Medium-voltage cable messengers shall be attached to poles with clamps providing a strength exceeding the required messenger strength and with not less than 15.9 mm (5/8 inch) through-bolts. Messengers shall be dead-ended, grounded, line-guyed at corners and dead-ends, and at intervals not exceeding 305 m (1000 feet) along straight runs.

3.6 CONNECTIONS TO UTILITY LINES

The Contractor shall coordinate the work with the Contracting Officer and shall provide for final connections to the electric lines.

3.7 CONNECTIONS BETWEEN AERIAL AND UNDERGROUND SYSTEMS

Connections between aerial and underground systems shall be made as shown. Underground cables shall be extended up poles in conduit to cable terminations. Conduits shall be secured to poles by conduit supports spaced not more than 3 m (10 feet) apart and with one support not more than 300 mm (12 inches) from any bend or termination. Cables shall be supported by devices separate from the conduit or guard, near their point of exit from the riser conduit ac guard. Cables guards shall be secured in accordance with the manufacturers published procedure. Risers shall be equipped with bushings to protect cables. Capnut potheads shall be used to terminate medium-voltage multiple-conductor cable.

3.8 GROUNDING

Noncurrent-carrying metal parts of equipment and conductor assemblies, such as medium-voltage cable terminations and messengers, operating mechanisms of pole top switches, and other noncurrent-carrying metal items shall be grounded. Additional grounding of neutral, and surge arrester grounding systems shall be installed.

3.8.1 Grounding Electrodes

Grounding electrodes shall be installed as follows:

a. Driven rod electrodes - Unless otherwise indicated, ground rods shall be located approximately 900 mm (3 feet) out from base of the pole and shall be driven into the earth until the tops of the rods are approximately 300 mm (1 foot) below finished grade. Multiple rods shall be evenly spaced at least 3 m (10 feet) apart and connected together 600 mm (2 feet) below grade with a minimum No. 6 bare copper conductor.

b. Ground Resistance - The maximum resistance of a driven ground rod shall not exceed 25 ohms under normally dry conditions. Whenever the required ground resistance is not met, provide additional electrodes interconnected with grounding conductors to achieve the specified ground resistance at no cost to Owner. The additional electrodes will be up to three, 3 m (10 feet) rods spaced a minimum of 3 m (10 feet) apart. In high ground resistance, UL listed chemically charged ground rods may be used. If the resultant resistance exceeds 25 ohms measured not less than 48 hours after rainfall, the Contracting Officer shall be notifies immediately. Connections below grade shall be fusion welded. Connections above grade shall be fusion welded or shall use UL 467 approved connectors.

3.8.2 Grounding and Bonding Connections

Connections above grade shall be made with bolted solderless connectors in compliance with UL 467, and those below grade shall be made by a fusion-welding process. Where grounding conductors are connected to aluminum-composition conductors, specially treated or lined copper-to-aluminum connectors suitable for this purpose shall be used.

3.8.3 Grounding Electrode Conductors

For single grounded or ungrounded systems, provide a grounding conductor for the surge arrester and equipment grounding conductors. Grounding electrode conductors shall be No. 6 hard drawn bare copper. Grounding electrode conductors shall be stapled to wood poles at intervals not exceeding 600 mm. (2 feet.) Bends greater than 45 degrees in grounding electrode conductor are not permitted.

3.9 FIELD TESTING

3.9.1 General

Field testing shall be performed in the presence of the Contracting Officer. The Contractor shall notify the Contracting Officer 3 days prior to conducting tests. The Contractor shall furnish materials, labor, and equipment necessary to conduct field tests. The Contractor shall perform tests and inspections recommended by the manufacturer unless specifically waived by the Contracting Officer. The Contractor shall maintain a written record of tests which includes date, test performed, personnel involved, devices tested, serial number and name of test equipment, and test results. Field reports will be signed and dated by the Contractor.

3.9.2 Safety

The Contractor shall provide and use safety devices such as rubber gloves, protective barriers, and danger signs to protect and warn personnel in the

test vicinity. The Contractor shall replace any devices or equipment which are damaged due to improper test procedures or handling.

3.9.3 Ground-Resistance Tests

The resistance of each pole ground shall be measured using the fall-of-potential method defined in IEEE Std 81. Ground resistance measurements shall be made before the electrical distribution system is energized and shall be made in normally dry conditions not less than 48 hours after the last rainfall. Resistance measurements of separate grounding electrode systems shall be made before the systems are bonded together below grade. The combined resistance of separate systems may be used to meet the required resistance, but the specified number of electrodes shall be provided.

3.9.4 Medium-Voltage Preassembled Cable Test

After installation, prior to connection to an existing system, and before the operating test, the medium-voltage preassembled cable system shall be given a high potential test. Direct-current voltage shall be applied on each phase conductor of the system by connecting conductors at one terminal and connecting grounds or metallic shieldings or sheaths of the cable at the other terminal for each test. Prior to the test, the cables shall be isolated by opening applicable protective devices and disconnecting equipment. The method, voltage, length of time, and other characteristics of the test for initial installation shall be in accordance with NEMA WC 7 or NEMA WC 8 for the particular type of cable installed, and shall not exceed the recommendations of IEEE Std 404 for cable joints unless the cable and accessory manufacturers indicate higher voltages are acceptable for testing. Should any cable fail due to a weakness of conductor insulation or due to defects or injuries incidental to the installation or because of improper installation of cable, cable joints, terminations, or other connections, the Contractor shall make necessary repairs or replace cables as directed. Repaired or replaced cables shall be retested.

3.9.5 Sag and Tension Test

The Contracting Officer shall be given prior notice of the time schedule for stringing conductors or cables serving overhead medium-voltage circuits and reserves the right to witness the procedures used for ascertaining that initial stringing sags and tensions are in compliance with requirements for the applicable loading district and cable weight.

3.9.6 Pre-Energization Services

The following services shall be performed on the equipment listed below. These services shall be performed subsequent to testing but prior to the initial energization. The equipment shall be inspected to insure that installation is in compliance with the recommendations of the manufacturer and as shown on the detail drawings. Terminations of conductors at major equipment shall be inspected to ensure the adequacy of connections. Bare and insulated conductors between such terminations shall be inspected to detect possible damage during installation. If factory tests were not performed on completed assemblies, tests shall be performed after the installation of completed assemblies. Components shall be inspected for damage caused during installation or shipment and to ensure that packaging materials have been removed. Components capable of being manually operated shall be operated manually prior to the first electrical operation. Components capable of being adjusted and tested shall be adjusted and tested in accordance with the instructions of the equipment manufacturer. Items for which such services shall be provided, but are not limited to, are the following:

Switches.

3.9.7 Operating Tests

After the installation is completed, and at such time as the Contracting Officer may direct, the Contractor shall conduct operating tests for

approval. The equipment shall be demonstrated to operate in accordance with the specified requirements. An operating test report shall be submitted in accordance with paragraph SUBMITTALS.

- - o 0 o - -

SECTION 16375 - ELECTRICAL DISTRIBUTION SYSTEM, UNDERGROUND

PART 1. - GENERAL

1.1 SUMMARY (Not Applicable)

1.2 REFERENCES

The publications listed below form a part of this specification to the extent referenced. The publications are referred to in the text by basic designation only.

AMERICAN ASSN OF STATE HIGHWAY AND TRANSPORTATION OFFICIALS (AASHTO)

AASHTO LTS-2	(1985; Rev 1986, 1987) Standard Specifications for Structural Supports for Highway Signs, Luminaires and Traffic Signals.

AMERICAN NATIONAL STANDARDS INSTITUTE, INC (ANSI)

ANSI C2	(1993) National Electrical Safety Code.
ANSI C12.1	(1988) Code for Electricity Metering.
ANSI C12.4	(1984) Mechanical Demand Registers.
ANSI C12.10	(1987) Electromechanical Watthour Meters.
ANSI C12.11	(1987) Instrument Transformers for Revenue Metering, 10 kV BIL through 350 kV BIL (0.6 kV NSV through 69 kV NSV).
ANSI C57.12.10	(1987) Transformers 230 kV and Below 833/958 through 8333/10 417 kVA, Single-Phase and 750/862 through 60,000/80,000/100,000 kVA, Three-Phase without Load Tap Changing; and 3750/4687 through 60,000/80,000/100,000 kVA with Load Tap Changing - Safety Requirements.
ANSI C57.12.13	(1982) Conformance Standards for Liquid-Filled Transformers Used in Unit Installations Including Unit Substations.
ANSI C57.12.26	(1987) Pad-Mounted Compartmental-Type, Self-Cooled, Three-Phase Distribution Transformers for Use with Separable Insulated High-Voltage Connectors, High-Voltage, 34500 Grd Y/19920 Volts and Below; 2500 kVA and Smaller.
ANSI C57.12.27	(1982) Conformance Requirements for Liquid-Filled Distribution Transformers Used in Pad-Mounted Installations, Including Unit Substations.
ANSI C57.12.50	(1981; R 1989) Requirements for Ventilated Dry-Type Distribution Transformers, 1 to 500 kVA, Single-Phase, and 15 to 500 kVA, Three-Phase, with High-Voltage, 601 to 34,500 Volts, Low-Voltage 120 to 600 Volts. ANSI C57.12.51 (1981; R 1989) Requirements for Ventilated Dry-Type Power Transformers, 501 kVA and Larger, Three-Phase, with High-Voltage 601 to 34,000 Volts, Low-Voltage 208y/120 to 4160 Volts.

ANSI C57.12.52	(1981; R 1989) Requirements for Sealed Dry-Type Power Transformers, 501 kVA and Larger, Three-Phase, with High-Voltage 601 to 34,500 Volts, Low-Voltage 2084/120 to 4160 Volts.
ANSI C57.12.70	(1978; R 1987) Terminal Markings and Connections for Distribution and Power Transformers.
ANSI C78.380	(1984) Method for the Designation of High-Intensity Discharge Lamps.
ANSI C80.1	(1983) Rigid Steel Conduit - Zinc Coated.
ANSI C82.4	(1985; C82.4a-1988) Ballasts for High-Intensity-Discharge and Low-Pressure Sodium Lamps (Multiple Supply Type).
ANSI C119.1	(1986) Sealed Insulated Underground Connector Systems Rated 600 Volts.
ANSI C135.30	(1988) Zinc-Coated Ferrous Ground Rods for Overhead or Underground Line Construction.
ANSI C136.2	(1985) Voltage Classification of Luminaires Used in Roadway Lighting Equipment.
ANSI C136.3	(1989) Luminaire Attachments Used in Roadway Lighting Equipment.
ANSI C136.6	(1984) Mechanical & Optical Interchangeability of Metal Heads and Reflector Assemblies Used in Roadway Lighting Equipment.
ANSI C136.9	(1984) Mechanical Interchangeability of Socket Support Assemblies for Use in Metal Heads Used in Roadway Lighting Equipment.
ANSI C136.10	(1988) Physical and Electrical Interchangeability of Photocontrol Devices, Plugs, and Mating Receptacles Used in Roadway Lighting Equipment.
ANSI C136.14	(1988) Enclosed Side-Mounted Luminaires for Horizontal-Burning High-Intensity Discharge Lamps.
ANSI C136.15	(1986) High-Intensity Discharge and Low-Pressure Sodium Lamps in Luminaires - Field Identification.

AMERICAN SOCIETY FOR TESTING AND MATERIALS (ASTM)

ASTM A 36	(1988c) Structural Steel.
ASTM A 48	(1983) Gray Iron Castings.
ASTM A 123	(1984) Zinc (Hot-Dip Galvanized) Coatings on Iron and Steel Products.
ASTM A 153	(1982; R 1987) Zinc Coating (Hot-Dip) on Iron and Steel Hardware.
ASTM B 8	(1986) Concentric-Lay-Stranded Copper Conductors, Hard, Medium-Hard, or Soft.

ASTM B 117	(1985) Salt Spray (Fog) Testing.
ASTM C 478	(1988a) Precast Reinforced Concrete Manhole Sections.
ASTM D 923	(1988) Sampling Electrical Insulating Liquids.
ASTM D 1654	(1979a; R 1984) Evaluation of Painted or Coated Specimens Subjected to Corrosive Environments.
ASTM D 2447	(1988) Polyethylene (PE) Plastic Pipe, Schedules 40 and 80, Based on Outside Diameter.
ASTM D 2513	(1988b) Thermoplastic Gas Pressure Pipe, Tubing, and Fittings.
ASTM D 3304	(1977; R 1983) Analysis of Environmental Materials for Polychlorinated Biphenyls.

AMERICAN SOCIETY OF MECHANICAL ENGINEERS (ASME)

ASME B31.1	(1989) Power Piping.
ASME B31.8	(1989) Gas Transmission and Distribution Piping Systems.

ASSN OF EDISON ILLUMINATING CO (AEIC)

AEIC CS5	(Oct 1987; 9th Ed) Thermoplastic and Crosslinked Polyethylene Insulated Shielded Power Cables Rated 5 Through 35 kV.
AEIC CS6	(Oct 1987; 5th Ed; Rev Mar 1989) Ethylene Propylene Rubber Insulated Shielded Power Cables Rated 5 Through 69 kV.

FACTORY MUTUAL ENGINEERING AND RESEARCH CORP (FM)

FM-01	(1989; Supple I, II & III) Approval Guide: A Guide to Equipment, Materials and Services Approved by Factory Mutual Research for Property Conservation.

FEDERAL SPECIFICATIONS (FS)

FS W-F-1814/GEN	(Rev A; Supple 1, Notice 1) Fuses, Cartridge, High Interrupting Capacity.
FS W-S-610	(Rev D; Notice 1) Splice Connectors.
FS FF-P-101	(Rev F) Padlocks.
FS HH-I-595	(Rev C) Insulation Tape, Electrical, Pressure-Sensitive Adhesive, Plastic.

INSTITUTE OF ELECTRICAL AND ELECTRONICS ENGINEERS, INC (IEEE)

IEEE C37.20.1	(1987) Metal-Enclosed Low-Voltage Power Circuit Breaker Switchgear.
IEEE C37.20.3	(1987) Metal-Enclosed Interrupter Switchgear.
IEEE C57.12.00	(1987) Liquid-Immersed Distribution, Power, and Regulating Transformers.

IEEE C57.12.01	(1979) Dry-Type Distribution and Power Transformers.
IEEE C57.12.80	(1978; R 1986) Terminology for Power and Distribution Transformers.
IEEE C57.12.90	(1987; Appendix C57.98-1986) Test Code for Liquid-Immersed Distribution, Power, and Regulating Transformers and Guide for Short-Circuit Testing of Distribution and Power Transformers.
IEEE C57.12.91	(1979) Test Code for Dry-Type Distribution and Power Transformers.
IEEE C57.13	(1978; R 1986) Instrument Transformers.
IEEE C57.15	(1986) Requirements, Terminology, and Test Code for Step-Voltage and Induction-Voltage Regulators.
IEEE C57.94	(1982) Installation, Application, Operation and Maintenance of Dry-Type General-Purpose Distribution and Power Transformers.
IEEE C57.98	(1986) Guide for Transformer Impulse Tests - Appendix to C57.12.90.
IEEE C57.100	(1986) Test Procedure for Thermal Evaluation of Oil-Immersed Distribution Transformers.
IEEE C57.105	(1978; R 1987) Transformer Connections in Three-Phase Distribution Systems.
IEEE Std 48	(1975) Standard Test Procedures and Requirements for High-Voltage Alternating-Current Cable Terminations.
IEEE Std 142	(1982) Recommended Practice for Grounding of Industrial and Commercial Power Systems.
IEEE Std 344	(1987) Seismic Qualification of Class 1E Equipment for Nuclear Power Generating Stations.
IEEE Std 386	(1985) Separable Insulated Connector Systems for Power Distribution Systems Above 600V.
IEEE Std 404	(1986) Cable Joints for Use with Extruded Dielectric Cable Rated 5000 V through 46 000 V and Cable Joints for Use with Laminated Dielectric Cable Rated 2500 V Through 500 000 V.
IEEE Std 592	(1977) Exposed Semiconducting Shields on Premolded High Voltage Cable Joints and Separable Insulated Connectors.NATIONAL ELECTRICAL MANUFACTURERS ASSN (NEMA)
NEMA AB 1	(1986; Rev 1) Molded Case Circuit Breakers and Molded Case Switches.
NEMA BU 1	(1988) Busways.
NEMA FB 1	(1988) Fittings, Cast Metal Boxes, and Conduit Bodies for Conduit and Cable Assemblies.

NEMA LA 1	(1986) Surge Arresters.
NEMA PB 1	(1984) Panelboards.
NEMA PB 2	(1989; PB 2.1-1986) Deadfront Distribution Switchboards.
NEMA SG 2	(1986) High-Voltage Fuses.
NEMA SG 3	(1981) Low-Voltage Power Circuit Breakers.
NEMA SG 5	(1981) Power Switchgear Assemblies.
NEMA TC 5	(1983) Corrugated Polyolefin Coilable Plastic Utilities Duct.
NEMA TC 6	(1983) PVC and ABS Plastic Utilities Duct for Underground Installation.
NEMA TC 7	(1983) Smooth-Wall Coilable Polyethylene Electrical Plastic Duct.
NEMA VC 7	(1982; R 1988; Rev 1 thru 4) Cross-Linked-Thermosetting-Polyethylene Insulated Wire and Cable for the Transmission and Distribution of Electrical Energy.
NEMA WC 8	(1976; R 1988; Rev 1 thru 8) Ethylene-Propylene-Rubber-Insulated Wire and Cable for the Transmission and Distribution of Electrical Energy.

NATIONAL FIRE PROTECTION ASSN (NFPA)

NFPA 70	(1993) National Electrical Code.

UNDERWRITERS LABORATORIES, INC (UL)

UL-03	(1989; Supple) Electrical Construction Materials Directory.
UL 6	(Oct 23, 1981; 9th Ed; Rev Nov 22, 1989) Rigid Metal Conduit.
UL 198E	(Jul 12, 1988; 4th Ed; Rev Jul 13, 1988) Class R Fuses.
UL 467	(Nov 22, 1984, 6th Ed; Rev thru Nov 14, 1986) Grounding and Bonding Equipment.
UL 486A	(Nov 24, 1980, 7th Ed; Rev thru Oct 12, 1989) Wire Connectors and Soldering Lugs for Use with Copper Conductors.
UL 486B	(Apr 13, 1982; 2nd Ed; Rev thru Oct 12, 1989) Wire Connectors for Use with Aluminum Conductors.
UL 489	(Sep 15, 1986; 7th Ed; Rev thru Apr 13, 1988) Molded-Case Circuit Breakers and Circuit-Breaker Enclosures.
UL 514A	(Dec 1, 1983; 7th Ed; Rev thru Jan 22, 1990) Metallic Outlet Boxes.

UL 543	(Jun 7, 1982; 5th Ed) Impregnated-Fiber Electrical Conduit.
UL 854	(Feb 9, 1987; 7th Ed; Rev thru Feb 2, 1990) Service-Entrance Cables.
UL 857	(Jan 8, 1990; 10th Ed) Busways and Associated Fittings.
UL 1242	(Oct 10, 1983; 1st Ed; Rev Nov 23, 1989) Intermediate Metal Conduit.
UL 1572	(Dec 10, 1984; 2nd Ed; Rev thru Mar 31, 1989) High Intensity Discharge Lighting Fixtures.

1.3 GENERAL REQUIREMENTS

Items of the same classification shall be identical including equipment, assemblies, parts, and components.

1.3.1 Code Compliance

The installation shall comply with the requirements and recommendations of NFPA 70 and ANSI C2.

1.3.2 Standard Product

Material and equipment shall be a standard product of a manufacturer regularly engaged in the manufacture of the product and shall essentially duplicate items that have been in satisfactory use for at least 2 years prior to bid opening.

1.3.3 Nameplates

Each major component of equipment shall have as a minimum the manufacturer's name, address, and catalog or style number on a nameplate securely attached to the item of equipment. Nameplates for individual items of electrical equipment shall be as specified in referenced publications and shall be provided on each item of equipment. Transformer nameplates shall be permanently marked and state that the transformer dielectric to be supplied is non-PCB classified with less than 50 parts per million (ppm) PCB content. If transformer nameplate is not so marked, the Contractor shall furnish manufacturer's certification for each transformer that the dielectric is non-PCB classified with less than 50 ppm PCB content. Certifications shall be related to serial numbers on transformer nameplates. Transformer dielectric exceeding the 50 ppm PCB content or transformers without certification will be considered as PCB insulated and will not be acceptable. In lieu of the manufacturer's certification, the Contractor may submit a test sample of the dielectric in accordance with ASTM D 923 and have tests performed per ASTM D 3304 at an EPA-approved testing facility to obtain this certification. Transformers with test results indicating PCB levels exceeding 50 ppm shall be replaced or decontaminated in accordance with approved EPA procedures to achieve the acceptable levels. The certification specified shall be submitted and approved prior to acceptance of the transformer and approved dielectric. It is not permissible to dilute contaminated dielectric in an attempt to lower the level of contamination. The PCB contaminated dielectric must be marked as PCB and transported to and incinerated by an approved EPA waste disposal facility. The Contractor shall furnish certification of proper disposal.

1.3.4 Verification of Dimensions

The Contractor shall become familiar with details of the work, shall verify dimensions in the field, and shall advise the Contracting Officer of any discrepancy before performing any work.

1.4 SUBMITTALS

The following shall be submitted in accordance with SECTION: 01300 - SUBMITTALS:

SD-17, Manufacturer's Catalog Data

The Contractor shall submit the following types of data to supplement the manufacturer's data and drawings, and Contractor's drawings.

Certifications shall be submitted when specified or required, including Certification of the Qualifications of Medium-Voltage Cable Installers, Certified Factory and Field Test Reports, and Certificates of Compliance submitted in lieu of other proofs of compliance with these contract provisions.

The Contractor shall submit a certification, to and for the approval of the Contracting Officer, that contains the names and the qualifications of people recommended to perform the splicing and termination of medium-voltage cables approved for installation under this contract. The certification shall indicate that any person recommended to perform actual splicing and terminations have been adequately trained in the proper techniques and have had at least 3 recent years of experience in splicing and terminating the same or similar types of cables approved for installation. In addition, any person recommended by the Contractor may be required to perform a dummy or practice splice and termination, in the presence of the Contracting Officer, before being approved as a qualified installer of medium-voltage cables. If that additional requirement is imposed, the Contractor shall provide short sections of the approved types of cables along with the approved type of splice and termination kits, and detailed manufacturer's instruction for the proper splicing and termination of the approved cable types. The certification shall be prepared in conformance with paragraph "CERTIFICATES OF COMPLIANCE" in SECTION 01300 - SUBMITTALS, and shall be accompanied by satisfactory proof of the training and experience of people recommended by the Contractor as cable installers.

The SF sub 6 gas pressurized cable and conduit system installer must be trained and certified in installation of this type of system and must be approved by the manufacturer of the system.

SD-31, Detail Drawings

After receiving complete material lists, but before installing any of these items, the Contractor shall submit complete detail drawings and such other descriptive data as the Contracting Officer may require to demonstrate compliance with the contract documents. "Detail drawings shall show the ratings of items and systems and how the components of an item and system are assembled, function together and how they will be installed on the project. Data and detail drawings for component parts of an item or system shall be coordinated and submitted as a unit. Data and detail drawings shall be coordinated and included in a single submission. Multiple submissions for the same equipment or system are not acceptable except where prior approval has been obtained from the Contracting Officer. In such cases, a list of data to be submitted later shall be included with the first submission. Detail drawings and manufacturers' data shall consist of the following:

a. Detail drawings showing physical arrangement, construction details, connections, finishes, materials used in fabrication, provisions for conduit or busway entrance, access requirements for installation and maintenance, physical size, electrical characteristics, foundation and support details, and equipment weight. Drawings shall be drawn to scale and/or dimensioned. Catalog cuts and published materials may be included to supplement drawings. All optional items shall be clearly identified as included or excluded.

b. Internal wiring diagrams of equipment showing wiring as actually furnished for this project. External wiring connections shall be clearly identified."

Detail drawings shall be submitted for the following items and such other items as the Contracting Officer may direct:

(1) Integral transformer load centers.

(2) Secondary unit substations.

(3) Street-lighting luminaires, and mounting brackets.

(4) Transformers, 200 kVA and larger, and pad-mounted type.

If departures from the contract drawings are deemed necessary by the Contractor, complete details of such departures, including changes in related portions of the project and the reasons therefore, shall be submitted with the detail drawings. Approved departures shall be made at no additional cost to the Government.

The Contractor shall submit drawings as required to supplement contract drawings, manufacturer's data and drawings, and Contractor's data to demonstrate compliance with applicable contract requirements. Drawings shall be dimensioned or scaled to show the relative arrangement and mounting details of the equipment or equipment assemblies.

SD-42, Material, Equipment, and Fixture Lists

A complete itemized listing of equipment and materials proposed for incorporation into the work shall be submitted. Each such itemization shall include an item number, the quantity of items proposed, and the name of the manufacturer of each such item.

SD-70, Test Reports

Certified factory test reports shall be submitted when manufacturers perform routine factory tests normally performed by the manufacturer, including tests required by standards listed in paragraph "REFERENCES." Additional certification is required to verify each transformer has passed a production line impulse test consisting of one reduced-wave and one full-wave lightning impulse test on each fully-insulated high-voltage terminal.

Field tests shall be made and test reports shall be written and certified by the Contractor to the Contracting Officer. Field tests shall include cable, operational, and resistance-to-ground tests.

SD-76, Certificates of Compliance

Where materials or equipment are specified to conform to the standards or publications, and requirements of AASHTO, ANSI, ASTM, AEIC, FM, IEEE, IES, NEMA, NFPA, or UL, or to conform to a FS, the Contractor shall submit proof that the items furnished under this section of the specifications conform to the specified requirements. The label or listing in UL-03 or in FM-01 or the manufacturer's certification or published catalog specification data statement that the items comply with applicable specifications, standards, or publications and with the manufacturer's standards will be acceptable evidence of such compliance.

Certificates shall be prepared by the manufacturers when the manufacturer's published data or drawings do not indicate conformance with other requirements of these specifications.

SD-80, Operation and Maintenance Manuals

Six copies of instruction manuals shall be furnished within 7 calendar days following the completion of factory tests and shall include assembly, installation, operation and maintenance manuals, spare parts data which provides supplier name, current cost, catalog order number, and a recommended list of spare parts to be stocked as well as all documents previously submitted and approved. Manuals shall also include data outlining step-by-step procedures for system startup and operation, and a troubleshooting guide which lists possible operational problems and corrective action to be taken. A brief description of all equipment and their basic operating features shall also be included. Documents shall be bound in a suitable binder adequately marked or identified on the spine and front cover. A table of contents page shall be included and marked with pertinent contract information contents of the manual. Tabs shall be provided to separate different types of documents, such as catalog ordering information, drawings, instructions, and spare parts data. Index sheets shall be provided for each section of the manual when warranted by the quantity of documents included under separate tabs or dividers. Three additional copies of the instruction manuals shall be submitted within 30 calendar days following the approval of the manuals.

PART 2. - PRODUCTS

2.1 MATERIALS

Materials shall conform to the following requirements:

2.1.1 Busways

NEMA BU 1 and UL 857.

2.1.1.1 Primary Sectionalizers

Provide three each 3 position, 5 kV class, loadbreak junction assemblies mounted in a padlockable, padmounted, steel enclosure as shown on drawings. Provide each junction with two parking stands and ground lug. Elastimold Catalog No. 163J3, Blackburn Catalog No. JJB10C3, or Contracting Officer approved equivalent. Provide separable elbow connectors for cables and 5 kV insulated caps for unused positions by same manufacturer as junction assembly.

Furnish padmounted designed to provide protection for 5 kV class electrical equipment subject to the following service conditions:

a. Ambient temperature: -18°C to 40°C.
b. Altitude: 3,000 to 7,000 feet above MSL.
c. Service location: Non-hazardous location.
d. Seismic zone: 2.
e. Environment: Outdoors in direct sunlight with full exposure to the weather. Occasional wind-blown rain, snow, sand, and dust.

2.1.2 Cables

Cables shall be of annealed copper. Conductors equivalent to THWN/THHN will be acceptable. Intermixing of copper and aluminum conductors is not permitted, except at connections to conductors not provided under this contract. Design is based on copper conductors. Cables shall be single-conductor type, except as otherwise noted. Aluminum cable are not acceptable.

2.1.2.1 Low-Voltage Power Cables

Cables AWG #8 and smaller shall be THWN/THHN, THW/THH or RHW/RHH. Cables AWG #6 and larger shall be USE/RHW/RHH.

2.1.2.2 Control Cable

Meet NEC 318, 340, 501, 725 and 760, UL listed 600V insulated type TC, suitable for direct burial; flame, moisture and sunlight resistant. Meet IEEE 383 flame test at 210 KBTU, 90° C. dry location, 75°. wet locations. Stranded, soft annealed copper conductors with PVC insulation and a 5 mil nylon jacket; with an overall PVC outer jacket. Conductors AWG #10 and smaller shall be identified per ICEA table K-2, methods 1 and 4 (fully color coded and numbered insulation). Conductors AWG #8 and larger shall be identified per ICEA method 4.

Damage to the jacket or sheath of cables to the extent that underlying insulation in exposed shall require correction of the cause of damage and replacement of the cables.

2.1.3 Cable Joints, Terminations, and Connectors

2.1.4 Cast Iron

ASTM A 48, Class 30B, minimum.

2.1.5 Concrete

Concrete shall be as specified in SECTION: 03300 - CONCRETE FOR BUILDING CONSTRUCTION. Duct encasement shall be of monolithic construction. Where a connection is made to an existing duct line, the concrete encasement shall be well bonded or doweled to the existing encasement.

2.1.6 Conduit and Fittings, Steel

2.1.7 Duct and Conduit Caulking Compound

Compounds for sealing ducts and conduit shall have a putty-like consistency workable with the hands at temperatures as low as 35 degrees F, shall neither slump at a temperature of 300 degrees F, nor harden materially when exposed to the air. Compounds shall adhere to clean surfaces of fiber, or plastic ducts; metallic conduits or conduit coatings; concrete, masonry, or lead; any cable sheaths, jackets, covers, or insulation materials; and the common metals. Compounds shall form a seal without dissolving, noticeably changing characteristics, or removing any of the ingredients. Compounds shall have no injurious effect upon the hands of workmen or upon materials.

Wall thicknesses and fittings shall be suitable for the application. Ducts shall be single, round-bore type. Ducts shall be of the same material when used for applications requiring the same type of wall thickness.

2.2 COMPONENTS

2.2.1 Luminaires, Floodlighting

UL 1572.

2.2.2 Nameplates

Nameplates shall be made of corrosion-resistant metal with not less than 1/4-inch tall raised or engraved characters. The nameplate shall be mounted on the front of the enclosure.

2.2.3 Padlocks

Padlocks shall conform to FS FF-P-101, Type EPB, Size 1-3/4-inch with 6 pins.

2.2.4 Poles

2.2.5 Protective Apparatus and Metering Devices

2.2.6 Surge Arresters

NEMA LA 1 of the zinc-oxide type.

2.2.7 Transformer Stations

ANSI C12.11, ANSI C57.12.10, ANSI C57.12.13, ANSI C57.12.27, ANSI C57.12.50, ANSI C57.12.51, ANSI C57.12.52, ANSI C57.12.70, and IEEE C57.12.00, IEEE C57.12.01, IEEE C57.12.80, IEEE C57.12.90, IEEE C57.12.91, IEEE C57.13, IEEE C57.15, IEEE C57.94, IEEE C57.98, IEEE C57.100, and IEEE C57.105 as applicable.

2.2.8 Metering

a. Multifunction Kilowatt/kWH Meter
   1. Microprocessor based meter with minimum 6 digit display and membrane type selector switches.
   2. Measures true RMS to 31st harmonic for parameters listed below.
   3. Programmable internal data logging capability.
   4. Voltage input:
      a. Ranges of 120 V up to 575 V plus. For this project: 120/208 V.
      b. impedance: 2 megohms.
   5. Current input:
      a. Ranges of 1 A and 5 A with overload capacity of 15 A continuous, 300 A for 1 second. For this project: 5 A.
      b. Maximum burden: .05 VA.
   6. Control Power: 96 to 154 VAC, maximum .2 A, 60 Hertz nominal.
   7. Voltage, current, control power inputs:
      a. Pass 2000 V for one minute hipot test.
      b. Pass ANSI/IEEE C37.90A - 1989 surge withstand and fast transient test or IEC 801-1 and 801-5.
   8. Accuracy, resolution, and meter range:

Parameter	Accuracy	Resolution	Meter Range
Volts	1%	.1%	0 - 1,000,000
Amps	1%	.1%	0 - 30,000
kW	2%	.1%	0 - 1,000,000
kVAR	2%	.1%	0 - 1,000,000
Power Factor	4%	1%	1 to +/- .6
Frequency	.5%	.1 Hz	40 to 450
kW Demand	2%	.1%	0 - 1,000,000
kWH Forward	.4%	1 kWH	0 - 1,000,000,000

   9. Control relays:
      a. Provide at least three, each with minimum SPDT contact rated to make 3400 VA, break 360 VA at 240 VAC inductive.
      b. Provide contact outputs for the following functions:
         1. Relay One: emulate a conventional kWH meter KYZ pulse. Set ratios as required by the City for each project.
         2. Relay Two: function as a reverse and open phase protective relay by analysis of negative sequence components: 4% normal, 6% trip. Trip delay: 5 seconds. Open for poor voltage conditions. Close with satisfactory voltage after reset delay of 10 minutes, but close instantaneously with satisfactory voltage and the presence of an input on the programmed status input.
         3. Relay three: function the same as relay two.
   10. Status inputs: minimum two; 120 VAC; 49 kOhm impedance.
   11. User-programmable set-points.
   12. Factory perform all programming before the MCC is shipped.
   13. UL listed or CSA certified.
   14. Square D, Westinghouse, or Engineer approved equivalent.

2.2.9 Warning Signs, High-Voltage

Porcelain enameled steel or approved equal.

2.3 FACTORY COATING

Equipment and component items, including but not limited to transformer stations and ferrous metal luminaires not hot-dip galvanized or porcelain enamel finished, shall be provided with corrosion-resistant finishes which shall withstand 125 hours of exposure to the salt spray test specified in ASTM B 117 without loss of paint or release of adhesion of the paint primer coat to the metal surface in excess of 1/16-inch from the test mark. The scribed test mark and test evaluation shall be in accordance with ASTM D 1654 with a rating of not less than 7 in accordance with TABLE 1, (Procedure A). Cut edges or otherwise damaged surfaces of hot-dip galvanized sheet steel or mill galvanized sheet steel shall be coated with a zinc rich paint.

PART 3. - EXECUTION

3.1 GENERAL INSTALLATION REQUIREMENTS

Steel conduits installed underground shall be installed and protected from corrosion in conformance with the requirements of SECTION: 16415 - ELECTRICAL WORK, INTERIOR. Except as covered herein, excavation, trenching, and backfilling shall conform to the requirements of SECTION: 02222 - EXCAVATION, TRENCHING, AND BACKFILLING FOR UTILITIES SYSTEMS. Concrete work shall conform to the requirements of SECTION: 03300 - CONCRETE FOR BUILDING CONSTRUCTION.

3.2 CABLES, GENERAL REQUIREMENTS

The type of installation, size and number of cables shall be as indicated. Conductors larger than No. 8 AWG shall be stranded. Each circuit shall be identified by means of fiber, laminated plastic, or nonferrous-metal tags, or approved equal, in each manhole, each handhole, each junction box, and at each terminal. Loads shall be divided as evenly as practicable on the various phases of the system. Manufacturer's written recommendations shall be furnished for each type of splice and medium-voltage cable joint and termination, and for fireproofing application methods, and shall be approved before any work is done. Medium-voltage cable joints and terminations shall be the standard product of a manufacturer and shall be either of the factory preformed type or of the kit type containing tapes and other required parts. Medium-voltage cable joints shall be made by qualified cable splicers. Compounds and tapes shall be electrical grade suitable for the cable insulation provided and shall use design materials and techniques recommended by the manufacturer. Maximum length of cable pull and cable pulling tensions shall not exceed the cable manufacturer's recommendations.

3.2.1 Duct Line Installation

Medium-voltage cables and Low-voltage cables shall be installed in duct lines where indicated. Cable splices in low-voltage cables shall be made in manholes and handholes only, except as otherwise noted.Neutral ~~(~~and ground~~)~~ conductors shall be installed in the same duct with their associated phase conductors. All medium voltage cable will be installed in concrete encased duct banks.

3.2.2 Connection to Buildings

Cables shall be extended into the various buildings as indicated, and shall be properly connected to the first applicable termination point in each building. Interfacing with building interior conduit systems shall be at conduit stubouts terminating 5 feet outside of a building and 2 feet below finished grade as specified and provided under SECTION: 16415 -

ELECTRICAL WORK, INTERIOR. After installation of cables, conduits shall be sealed with caulking compound to prevent entrance of moisture or gases into buildings.

3.3 MEDIUM-VOLTAGE CABLES

Medium-voltage cables shall be suitable for a rated circuit voltage of 15 kV. Other parts of the cable system such as joints and terminations shall have ratings not less than the rating of the cables on which they are installed. Separable insulated connectors shall have nominal voltage ratings coordinated to associated apparatus ratings rather than cable ratings when used to connect cable to apparatus. Cables shall be provided with 133 percent insulation level Neutral conductors of grounded neutral systems shall be of the same insulation material as phase conductors, except that a 600-volt insulation rating is acceptable.

3.3.1 Cable Joints

Shields shall be applied as required to continue the shielding system through each entire cable joint. Shields may be integrally molded parts of preformed joints. Shields shall be grounded at each joint.

3.3.2 Terminations

Terminations shall be IEEE Std 48, Class 1 or Class 2; of the molded elastomer, wet-process porcelain, pre-stretched elastomer, heat-shrinkable elastomer, or taped type. Acceptable elastomers are track-resistant silicone rubber or track-resistant ethylene propylene compounds, such as ethylene propylene rubber or ethylene propylene diene monomer. Separable insulated connectors may be used for apparatus terminations, when such apparatus is provided with suitable bushings. Terminations shall be of the outdoor type, except that where installed inside outdoor equipment housings which are sealed against normal infiltration of moisture and outside air, indoor, Class 2 terminations are acceptable. Class 3 terminations are not acceptable. Terminations, where required, shall be provided with mounting brackets suitable for the intended installation and with grounding provisions for the cable shielding, metallic sheath, and armor.

3.4 LOW-VOLTAGE CABLES

Cable shall be rated 600 volts. Other parts of cable systems such as splices and terminations shall be rated at not less than 600 Volts. Splices in wires No. 10 AWG and smaller shall be made with an insulated, solderless, pressure type connector, Type I, Class 1, Grade B, Style G, or Type II, Class 1 of FS W-S-610 and conforming to the applicable requirements of UL 486A. Splices in wires No. 8 AWG and larger shall be made with non-insulated, solderless, pressure type connector, Type II, Class 2 of FS W-S-610, conforming to the applicable requirements of UL 486A and UL 486B. They shall then be covered with an insulation and jacket material equivalent to the conductor insulation and jacket. All splices below grade or in wet locations shall be sealed type conforming to ANSI C119.1 or shall be waterproofed by a sealant-filled, thick wall, heat shrinkable, thermosetting tubing or by pouring a thermosetting resin into a mold that surrounds the joined conductors.

3.4.1 Fuses

The Contractor shall furnish a complete set of fuses for all switches as required. Time-current-tripping characteristics of fuses serving motors or connected in series with circuit breakers shall be coordinated for the proper operation. Fuses shall have a voltage rating not less than the circuit voltage.

3.5 DUCT LINES

Duct lines shall be concrete-encased, thin-wall type.

3.5.1 Requirements

Numbers and sizes of ducts shall be as indicated. Duct lines shall be laid with a minimum slope of 4 inches per 100 feet. Depending on the contour of the finished grade, the high-point may be at a terminal, a manhole, a handhole, or between manholes or handholes. Manufactured 90-degree duct bends may be used only for pole or equipment risers, unless specifically indicated as acceptable. The minimum manufactured bend radius shall be 18 inches for ducts of less than 3-inch diameter, and 36 inches for ducts 3 inches or greater in diameter. Otherwise, long sweep bends having a minimum radius of 25 feet shall be used for a change of direction of more than 5 degrees, either horizontally or vertically. Both curved and straight sections may be used to form long sweep bends as required, but the maximum curve used shall be 30 degrees and manufactured bends shall be used. Ducts shall be provided with end bells whenever duct lines terminate in manholes or handholes. ┼Duct line markers shall be provided as indicated at the ends of long duct line stubouts or for other ducts whose locations are indeterminate because of duct curvature or terminations at completely below-grade structures. In lieu of markers, a 5-mil brightly colored plastic tape not less than 3 inches in width and suitably inscribed at not more than 10 feet on centers with a continuous metallic backing and a corrosion-resistant 1-mil metallic foil core to permit easy location of the duct line, shall be placed approximately 12 inches below finished grade levels of such lines.┼

3.5.2 Treatment

Ducts shall be kept clean of concrete, dirt, or foreign substances during construction. Field cuts requiring tapers shall be made with proper tools and match factory tapers. After a duct line is completed, a standard flexible mandrel shall be used for cleaning followed by a brush with stiff bristles. Mandrels shall be at least 12 inches long and have diameters 1/4-inch less than the inside diameter of the duct being cleaned. Pneumatic rodding may be used to draw in lead wires. A coupling recommended by the duct manufacturer shall be used whenever an existing duct is connected to a duct of different material or shape. Ducts shall be stored to avoid warping and deterioration with ends sufficiently plugged to prevent entry of any water or solid substances. Ducts shall be thoroughly cleaned before being laid. Plastic ducts shall be stored on a flat surface and protected from the direct rays of the sun.

3.5.3 Concrete Encasement

Each single duct shall be completely encased in concrete with a minimum of 3 inches of concrete around each duct, except that only 2 inches of concrete are required between adjacent electric power or adjacent communication ducts, and 4 inches of concrete shall be provided between adjacent electric power and communication ducts. Duct line encasements shall be monolithic construction. Where a connection is made to a previously poured encasement, the new encasement shall be well bonded or doweled to the existing encasement. At any point, except railroad crossings, tops of concrete encasements shall be not less than 18 inches below finished grade or paving. At railroad crossings, duct lines shall be encased with concrete, reinforced as indicated. Tops of concrete encasements shall be not less than 5 feet below tops of rails, unless otherwise indicated. Separators or spacing blocks shall be made of steel, concrete, plastic, or a combination of these materials placed not further apart than 4 feet on centers. Ducts shall be securely anchored to prevent movement during the placement of concrete and joints shall be staggered at least 6 inches vertically.

3.5.4 Nonencased Direct-Burial

Top of duct lines shall be below frost line but not less than 24 inches below finished grade. Ducts shall be buried below frost line but in the earth and shall be installed with a minimum of 3 inches of earth around each duct, except that between adjacent electric power and communication ducts, 12 inches of earth is required. Bottoms of trenches shall be graded toward manholes or handholes and shall be smooth and free of stones, soft spots, and sharp objects. Where bottoms of trenches comprise materials other than sand or stone-free earth, 3-inch layers of sand or stone-free earth shall be laid first and compacted to approximate densities of surrounding firm soil before installing ducts in direct-contact tiered fashion. Joints in adjacent tiers of duct shall be vertically staggered at least 6 inches. The first 4-inch layer of backfill cover shall be sand or stone-free earth compacted as previously specified. Duct banks may be held in alignment with earth. However, high-tiered banks shall use a wooden frame or equivalent form to hold ducts in alignment prior to backfilling. Selected earth at duct banks shall be thoroughly tamped in 4- to 6-inch layers.

3.5.5 Installation of Couplings

Joints in each type of duct shall be made up in accordance with the manufacturer's recommendations for the particular type of duct and coupling selected and as approved. In the absence of specific recommendations, various types of duct joint couplings shall be made watertight as specified.

3.6 TRANSFORMER STATIONS

Transformer stations shall be of the outdoor type having the ratings and arrangements indicated. Medium-voltage ratings of cable terminations for use on primary systems shall be 15 kV between phases for 133 percent insulation level. The voltage rating of protective devices for use on primary or secondary systems shall be not less than the nominal voltage of the system to which they are connected. Transformer stations shall be provided with integral intermediate class surge arrester protection.

3.6.1 Pad-Mounted Tamperproof Compartmental Transformer Stations

Pad-mounted tamperproof compartmental transformer stations shall be of the dead-front radial type. The high voltage bushing wells shall be furnished with feed-through inserts with one set of high-voltage bushings used for cable feed and the other set of high-voltage bushings available for surge protection devices. Protective devices shall have ratings compatible with the associated transformer rating. Transformer stations shall be assembled and coordinated by one manufacturer and each transformer station shall be shipped as a complete unit so that field installation requirements are limited to mounting each unit on a concrete pad and connecting it to primary and secondary lines. Transformer stations shall be provided with a corrosion-resistant finish in accordance with paragraph "FACTORY COATING" and "FINISHING". Stainless steel pins and hinges shall be provided. Barriers are required between high and low-voltage compartments. High-voltage compartment doors shall be interlocked with low-voltage compartment doors to prevent access to any high-voltage section unless its associated low-voltage section door has first been opened. Compartments shall be sized to meet the specific dimensional requirements of ANSI C57.12.26. Pentahead locking bolts shall be provided.

High-voltage compartments shall be dead-front construction. Primary protection shall include load-bread switching, drawout dry-well-mounted current-limiting fuses, and medium-voltage separable connectors. Switches shall be of the group-operated type. Switches shall be mounted inside transformer tanks with switch operating handles located in high-voltage compartments and equipped with metal loops for hook stick operation.

Fuses shall be interlocked with switches so that fuses can be removed only when the associated switch is in the "OFF" position. Adjacent to medium-voltage cable connections, a nameplate or equivalent stencilled inscription shall be provided inscribed "Do not open cable connectors unless switch is off." Adjacent to switches, nameplates shall identify switch operating handles and "ON" and "OFF" positions. Surge protection shall be provided consisting of combined dead-front molded-rubber separable connectors and zinc-oxide gapless varistor surge protectors. Combination units shall meet the applicable requirements of IEEE Std 386 and NEMA LA 1.

3.6.2 Installation

Transformer stations shall be anchored with a minimum of 4 anchor bolts not less than 1/2-inch diameter embedded in concrete pads. Units shall be carefully installed so as not to scratch finishes. After installation, finished surfaces shall be inspected and scratches touched up with a finish furnished by the manufacturer especially for this purpose.

3.6.3 Surge Protection

Surge protection shall be provided where indicated and shall be rated 12 kV. Surge arresters shall be of the distribution-valve class. Arresters shall be equipped with suitable mounting brackets for the applicable method of mounting.

3.6.4 Busways

Busways shall be of the voltage, phase, and continuous current ratings indicated. Neutrals shall be full size. Busways shall have short-circuit ratings not less than the maximum short-circuit currents of associated transformers, assuming primary sources of infinite capacity. Busways shall be feeder type and of outdoor or indoor service construction as suitable to the location. Busways shall be complete with elbows, fittings, flanges, end-closures, tees, crosses, cable-tap boxes, accessories, and other devices required for the indicated installation, and shall be coordinated for connection to the indicated equipment. Busways penetrating walls shall have wall flanges installed on both surfaces of walls. Wall openings shall be approximately 1/4-inch larger than the busway on each of the four busway sides, and openings shall be properly sealed with a suitable compound. Busways shall be supported at intervals not exceeding 10 feet and shall be properly braced to prevent lateral movement. Detail drawings submitted for busway supports and bracing shall indicate that busways are adequately supported for the seismic zone in which they are installed.

3.6.5 Seismic Requirements

The following anchoring or support requirements shall be utilized in addition to requirements hereinbefore specified or indicated on the drawings.

3.7 LIGHTING

3.7.1 Vandal-Resistant Construction

Where indicated, luminaires shall be provided with vandal-resistant construction. Exposed diffusers, reflectors, or refractors shall be of a polycarbonate resin, except that other material may be used if protected by a polycarbonate resin shield or cast metal guard. Luminaires mounted 15 feet and less above grade shall have exposed screws of the tamper-resistant type.

3.7.2 Photo-Control

Where indicated, luminaires shall be individually controlled by a photo-control element mounted on the luminaire. Each photo-control element shall have an adjustable operating range of approximately 0.5 to 5.0 footcandles and shall be mounted in a replaceable, weatherproof, plug-in or twist-lock assembly.3.7.3 Poles

Lighting poles shall be a nominal length as shown on the Drawings. Poles shall be suitable for use with underground supply conductors. Poles shall be designed for a wind velocity of 80 mph at the base of the pole, for a wind gust factor of 1.3, and for the height and drag factors recommended by AASHTO LTS-2. The effective projected area of luminaires and other pole-mounted devices shall be taken into account in pole design. Poles shall have grounding provisions. Bases shall be of the anchor-bolt-mounted type. The type of pole shaft material provided shall not be mixed on any project.

3.8 CONCRETE PULLBOXES

Concrete pullboxes shall consist of precast reinforced concrete boxes, extensions, bases, and covers. Concrete reinforcing shall be that which is regularly used in the standard products of the manufacturer. Pullbox tops shall be flush with sidewalks or curbs or placed 1/2-inch above surrounding grades when remote from curbed roadways or sidewalks. Covers shall be marked "Low-Voltage" and provided with two lifting eyes and two hold-down bolts. Each box shall have a suitable opening for a ground rod. Conduit, cable, ground rod entrances, and unused openings shall be sealed with mortar.

3.9 CONNECTIONS BETWEEN MEDIUM-VOLTAGE AERIAL AND UNDERGROUND SYSTEMS

Where indicated, connections between medium-voltage underground and aerial systems shall be made as shown. Underground cables shall be extended up poles in conduit to medium-voltage cable terminations. Conduits shall be secured to wood poles by two-hole galvanized steel pipe straps spaced not more than 10 feet apart and with one strap not more than 3 feet from any outlet or termination.

3.10 GROUNDING

Neutral conductors, cable shields, metallic cable sheaths and armor, metallic conduits, cable terminations, junction boxes, poles, surge arresters, fencing enclosing electrical equipment, and other non-current-carrying metallic parts of equipment shall be grounded.

3.10.1 General Requirements

A resistance of not greater than 25 ohms shall be provided, unless otherwise specified. Ground resistances shall be measured in normally dry conditions not less than 48 hours after rainfall. Resistances of systems requiring separate ground rods, rather than a counterpoise, shall be measured separately before bonding below grade. The combined ground resistance of separate systems bonded together below grade may be used to meet the specified ground resistance, but the minimum number of rods indicated must still be provided.

3.10.2 Neutral Grounding

Neutral conductors shall be grounded where indicated. Ground wires shall be not less than No. 1/0 AWG, except that where the rated phase current exceeds 400 amperes, the size of neutral ground wires shall be increased to not less than one-half the size of the cross-sectional area of the individual phase conductors. Neutral ground wires shall be protected by conduit where such wires run exposed above grade in non-fence-enclosed areas or are run through concrete construction. Where concrete

penetration is necessary, nonmetallic conduit shall be cast flush with the points of concrete entrance and exit so as to provide an opening for the ground wire and the opening shall be sealed with a suitable compound after installation of the ground wire. Bends greater than 45 degrees in ground wire connections to the ground rods or counterpoises are not permitted.

3.10.3 Equipment Grounding

Equipment frames of metal-enclosed equipment, medium-voltage cable shields at cable joints and terminations, metal splice boxes, chain-link fencing, and other non-current-carrying metal items, shall be grounded as required by the National Electric Code unless otherwise indicated.

3.10.4 Surge Arrester Grounding

Surge arresters shall be grounded. Resistance to ground for intermediate-class arresters shall be not more than 10 ohms and for distribution-class arresters shall be not more than 25 ohms. Ground wire connections shall be not less than No. 4 AWG for distribution arresters and No. 1/0 AWG for intermediate arresters. Connections to earth shall be made in the same manner as required for neutral conductors. Surge arrester grounds may use the same ground wires provided for equipment operating at more than 750 volts. Surge arrester and secondary neutral grounds shall be separate from and independent of each other but both grounds shall be bonded together below grade at the ground rods or may utilize a common counterpoise.

3.10.5 Lighting Pole Grounding

Bases of lighting poles shall be connected to an adjacent ground rod by means of a No. 6 AWG wire. A ground connection from poles back to neutral ground points shall also be provided utilizing either metal raceways or ground wires.

3.10.6 Manhole, Handhole, or Concrete Pullbox Grounding

Ground rods installed in electrical-distribution-system manholes, handholes, or concrete pullboxes shall be properly connected to the cable shielding, metallic sheath, and armor at each cable joint or splice by means of No. 4 AWG or equivalent braided tinned copper wire. Connections to metallic cable sheaths shall be by means of tinned terminals soldered to ground wires and to cable sheaths. Care shall be taken in soldering not to damage metallic cable sheaths or shields. Ground rods shall be protected with a double wrapping of pressure-sensitive plastic tape for a distance of 2 inches above and 6 inches below concrete penetrations. Ground wires shall be neatly and firmly attached to manhole or handhole walls and the amount of exposed bare wire shall be held to a minimum.

3.10.7 Metal Splice Box Grounding

Metal splice boxes for medium-voltage direct-burial cable shall be grounded by connection to a ground rod located within 2 feet of each splice box using a ground wire having a current-carrying capacity of at least 20 percent of the individual phase conductors in the associated splice box, but not less than No. 6 AWG.

3.11 TESTS

3.11.1 Operating Test

After the installation is completed, the Contractor shall conduct an operating test for approval. Equipment shall be demonstrated to operate in accordance with the requirements herein. Tests shall be performed in the presence of the Contracting Officer. The Contractor shall furnish instruments and personnel required for the test. Utilities for testing shall be provided as specified in the SPECIAL CLAUSES.

3.11.2 Ground-Resistance Measurements

Ground-resistance measurements of each ground rod shall be taken and certified by the Contractor to the Contracting Officer. No part of the electrical distribution system shall be energized prior to the resistance testing of that system's ground rods and grounding system and submission of test results to the Contracting Officer. Test reports shall indicate the location of the ground rod and grounding system and the resistance and the soil conditions at the time the test was performed. When the building water service is used as a ground or part of the grounding system, ground-resistance measurements shall also be made of this connection. Ground-resistance measurements shall be made in normally dry weather, not less than 24 hours after and with the ground under test isolated from other grounds. The resistance to ground shall be measured using the fall-of-potential method described in IEEE Std 142.

3.11.3 Cable Tests

Immediately after the primary cables have been installed and terminated but prior to connection to equipment or existing circuits, d-c voltage and insulation resistance tests shall be conducted in accordance with NEMA standard WC7 or WC8 as "applicable for type of cable installed." Voltage tests shall be as required for "Voltage Tests After Installation." Direct-current voltage shall be applied on each phase conductor of the system by connecting conductors as one terminal and connecting grounds or metallic shieldings or sheaths of the cable as the other terminal for each test. Characteristics of the test shall not exceed the recommendations of IEEE No. 404 for cable joints unless the cable and accessory manufacturers indicate higher voltages are acceptable for testing. Insulation Resistance tests shall be performed before and after voltage test. A continuity check shall be made prior to first insulation resistance test. Tests shall be performed by a qualified cable test engineer. Certified copies of test results along with remarks, in triplicate, shall be furnished to the Contracting Officer immediately following the tests, and shall indicate acceptability of the tested cable.

3.12 FINISHING

Painting required for surfaces not otherwise specified and finish painting of items only primed at the factory, shall be as specified in SECTION: 09900 - PAINTING, GENERAL.

- - o 0 o - -

SECTION 16415

ELECTRICAL WORK, INTERIOR

PART 1 GENERAL

1.1 REFERENCES

The publications listed below form a part of this specification to the extent referenced. The publications are referred to in the text by basic designation only.

AMERICAN NATIONAL STANDARDS INSTITUTE (ANSI)

ANSI C12.1	(1988) Code for Electricity Metering
ANSI C12.4	(1984; R 1990) Mechanical Demand Registers
ANSI C12.10	(1987) Electromechanical Watthour Meters
ANSI C12.11	(1987) Instrument Transformers for Revenue Metering, 10 kV BIL through 350 kV (0.6 kV NSV through 69 kV NSV)
ANSI C37.16	(1988) Switchgear - Low-Voltage Power Circuit Breakers and AC Power Circuit Protectors - Preferred Ratings, Related Requirements, and Application Recommendations
ANSI C39.1	(1981) Electrical Analog Indicating Instruments
ANSI C57.12.10	(1988) Transformers - 230 kV and Below 833/958 through 8333/10 417 kVA, Single-Phase, and 750/862 through 60 000/80 000/100 000 kVA, Three-Phase without Load Tap Changing; and 3750/4687 through 60 000/80 000/100 000 kVA with Load Tap Changing - Safety Requirements
ANSI C57.12.13	(1982) Conformance Requirements for Liquid-Filled Transformers Used in Unit Installations, Including Unit Substations
ANSI C57.12.27	(1982) Conformance Requirements for Liquid-Filled Distribution Transformers Used in Pad-Mounted Installations, Including Unit Substations
ANSI C57.12.50	(1981; R 1989) Ventilated Dry-Type Distribution Transformers, 1 to 500 kVA, Single-Phase, and 15 to 500 kVA, Three-Phase, with High-Voltage 601 to 34 500 Volts, Low-Voltage 120 to 600 Volts
ANSI C57.12.51	(1981; R 1989) Ventilated Dry-Type Power Transformers, 501 kVA and Larger, Three-Phase, with High-Voltage 601 to 34 500 Volts, Low-Voltage 208Y/120 to 4160 Volts
ANSI C57.12.52	(1981; R 1989) Sealed Dry-Type Power Transformers, 501 kVA and Larger, Three-Phase, with High-Voltage 601 to 34 500 Volts, Low-Voltage 208Y/120 to 4160 Volts
ANSI C57.12.70	(1978; R 1987) Terminal Markings and Connections for Distribution and Power Transformers
ANSI C80.5	(1990) Rigid Aluminum Conduit
ANSI C82.1	(1985; C82.1a; C82.1b; C82.1c) Ballasts for Fluorescent Lamps

ANSI C82.4	(1985; C82.4a) Ballasts for High-Intensity-Discharge and Low-Pressure Sodium Lamps (Multiple-Supply Type)
ANSI C135.30	(1988) Zinc-Coated Ferrous Ground Rods for Overhead or Underground Line Construction

CODE OF FEDERAL REGULATIONS (CFR)

47 CFR 18	Rules and Regulations: Industrial, Scientific, and Medical Equipment
47 CFR 68	Connection of Terminal Equipment to the Telephone Network

FEDERAL SPECIFICATIONS (FS)

FS L-C-530	(Rev C) Coating, Pipe, Thermoplastic Resin
FS L-P-387	(Rev A; Am 1, Int Am 2) Plastic Sheet, Laminated, Thermosetting (for Designation Plates)

INSTITUTE OF ELECTRICAL AND ELECTRONICS ENGINEERS (IEEE)

IEEE C37.13	(1990) Low-Voltage AC Power Circuit Breakers Used in Enclosures
IEEE C37.20.1	(1987) Metal-Enclosed Low-Voltage Power Circuit-Breaker Switchgear
IEEE C57.12.00	(1993) Liquid-Immersed Distribution, Power, and Regulating Transformers
IEEE C57.12.01	(1989) Dry-Type Distribution and Power Transformers Including Those With Solid Cast and/or Resin - Encapsulated Windings
IEEE C57.12.80	(1978; R 1992) Terminology for Power and Distribution Transformers
IEEE C57.12.90	(1993) Test Code for Liquid-Immersed Distribution, Power, and Regulating Transformers and Guide for Short-Circuit Testing of Distribution and Power Transformers
IEEE C57.12.91	(1979) Test Code for Dry Type Distribution and Power Transformers
IEEE C57.13	(1993) Instrument Transformers
IEEE C57.94	(1982; R 1987) Installation, Application, Operation and Maintenance of Dry-Type General Purpose Distribution and Power Transformers
IEEE C57.98	(1986) Guide for Transformer Impulse Tests - Appendix to C57.12.90
IEEE C57.100	(1986) Test Procedure for Thermal Evaluation of Oil-Immersed Distribution Transformers
IEEE C57.105	(1978; R 1987) Transformers Connections in Three Phase Distribution Systems
IEEE C62.41	(1991) Surge Voltages in Low-Voltage AC Power Circuits
IEEE Std 81	(1983) Guide for Measuring Earth Resistivity, Ground Impedance, and Earth Surface Potentials of a Ground System

INSULATED CABLE ENGINEERS ASSOCIATION (ICEA)

ICEA S-80-576	(1988) Communications Wire and Cable for Wiring of Premises

NATIONAL ELECTRICAL MANUFACTURERS ASSOCIATION (NEMA)

NEMA 250	(1991) Enclosures for Electrical Equipment (1000 Volts Maximum)
NEMA AB 1	(1986; Rev 1) Molded Case Circuit Breakers and Molded Case Switches
NEMA BU 1	(1988; BU 1.1-1986) Busways
NEMA FU 1	(1986) Low Voltage Cartridge Fuses
NEMA ICS 1	(1988; Rev 1, 2 & 3) Industrial Controls and Systems
NEMA ICS 2	(1988; Rev 1) Industrial Control Devices, Controllers and Assemblies
NEMA ICS 3	(1988; Rev 1) Industrial Systems
NEMA ICS 6	(1988; Rev 1) Enclosures for Industrial Control and Systems
NEMA LE 4	(1987) Recessed Luminaires, Ceiling Compatibility
NEMA MG 1	(1993) Motors and Generators
NEMA MG 10	(1983; R 1988) Energy Management Guide for Selection and Use of Polyphase Motors
NEMA OS 1	(1989) Sheet Steel Outlet Boxes, Device Boxes, Covers, and Box Supports
NEMA OS 2	(1986; Errata 1986; R 1991) Nonmetallic Outlet Boxes, Device Boxes, Covers and Box Supports
NEMA PB 1	(1990) Panelboards
NEMA PB 2	(1989) Deadfront Distribution Switchboards
NEMA PE 5	(1985; R 1991) Utility Type Battery Chargers
NEMA PE 7	(1985; R 1991) Communication Type Battery Chargers
NEMA RN 1	(1989) Polyvinyl-Chloride (PVC) Externally Coated Galvanized Rigid Steel Conduit and Intermediate Metal Conduit
NEMA ST 20	(1992) Dry-Type Transformers for General Applications
NEMA TC 2	(1990) Electrical Polyvinyl Chloride (PVC) Tubing (EPT) and Conduit (EPC-40 and EPC-80)
NEMA TC 13	(1986) Electrical Nonmetallic Tubing (ENT)
NEMA WD 1	(1983; R 1989) General Requirements for Wiring Devices
NEMA WD 6	(1988) Wiring Devices - Dimensional Requirements

NATIONAL FIRE PROTECTION ASSOCIATION (NFPA)

NFPA 70	(1993) National Electrical Code

NFPA 101	(1994) Safety to Life from Fire in Buildings and Structures

RURAL ELECTRIFICATION ADMINISTRATION (REA)

REA TE&CM 823	(1980) Electrical Protection by Use of Gas Tube Arresters

UNDERWRITERS LABORATORIES (UL)

UL-03	(1993; Supple) Electrical Construction Materials Directory
UL 1	(1985; Rev thru Aug 1993) Flexible Metal Conduit
UL 5	(1985; Rev thru Sep 1990) Surface Metal Raceways and Fittings
UL 6	(1993) Rigid Metal Conduit
UL 20	(1986; Rev thru Jul 1993) General-Use Snap Switches
UL 44	(1991; Rev thru Feb 1994) Rubber-Insulated Wires and Cables
UL 50	(1992; Rev thru Feb 1994) Enclosures for Electrical Equipment
UL 67	(1988; Rev thru Feb 1993) Panelboards
UL 83	(1991; Rev thru Jul 1993) Thermoplastic-Insulated Wires and Cables
UL 94	(1991; Rev May 1993) Tests for Flammability of Plastic Materials for Parts in Devices and Appliances
UL 98	(1987; Rev thru Apr 1990) Enclosed and Dead-Front Switches
UL 198B	(1988; Rev Jan 1988) Class H Fuses
UL 198C	(1986; Rev thru Jun 1993) High-Interrupting-Capacity Fuses, Current-Limiting Types
UL 198D	(1988; Rev Jul 1988) Class K Fuses
UL 198E	(1988; Rev Jul 1988) Class R Fuses
UL 198F	(1988) Plug Fuses
UL 198G	(1988; Rev May 1988) Fuses for Supplementary Overcurrent Protection
UL 198H	(1988; Rev thru Nov 1993) Class T Fuses
UL 198L	(1988; Rev Mar 1988) D-C Fuses for Industrial Use
UL 360	(1986; Rev thru Jan 1993) Liquid-Tight Flexible Steel Conduit
UL 467	(1984; Rev thru Nov 1986) Grounding and Bonding Equipment
UL 486A	(1991; Rev Oct 1991) Wire Connectors and Soldering Lugs for Use with Copper Conductors

UL 486B	(1991; Rev thru Apr 1992) Wire Connectors for Use with Aluminum Conductors
UL 486C	(1991; Rev thru Sep 1992) Splicing Wire Connectors
UL 489	(1991; Rev thru Aug 1993) Molded-Case Circuit Breakers and Circuit-Breaker Enclosures
UL 497	(1991; Rev Sep 1992) Protectors for Paired Conductor Communication Circuits
UL 498	(1991; Rev thru Dec 1993) Attachment Plugs and Receptacles
UL 506	(1989; Rev Sep 1993) Specialty Transformers
UL 508	(1993) Industrial Control Equipment
UL 510	(1986; Rev Oct 1986) Insulating Tape
UL 512	(1993) Fuseholders
UL 514A	(1991) Metallic Outlet Boxes
UL 514B	(1992; Rev thru Mar 1993) Fittings for Conduit and Outlet Boxes
UL 514C	(1988; Rev Jun 1989) Nonmetallic Outlet Boxes, Flush-Device Boxes, and Covers
UL 542	(1985; Rev thru Oct 1993) Lampholders, Starters, and Starter Holders for Fluorescent Lamps
UL 651	(1989; Rev thru Dec 1989) Schedule 40 and 80 Rigid PVC Conduit
UL 651A	(1989; Rev thru Dec 1989) Type EB and A Rigid PVC Conduit and HDPE Conduit
UL 674	(1989) Electric Motors and Generators for Use in Hazardous (Classified) Locations
UL 698	(1991; Rev thru May 1993) Industrial Control Equipment for Use in Hazardous (Classified) Locations
UL 719	(1985; Rev thru Apr 1993) Nonmetallic-Sheathed Cables
UL 797	(1993) Electrical Metallic Tubing
UL 817	(1986; Rev thru Jul 1993) Cord Sets and Power-Supply Cords
UL 844	(1990; Rev thru Dec 1993) Electric Lighting Fixtures for Use in Hazardous (Classified) Locations
UL 845	(1988; Rev thru Jul 1993) Motor Control Centers
UL 857	(1990; Errata Apr 1990; Rev thru Jan 1994) Busways and Associated Fittings
UL 869A	(1993) Reference Standard for Service Equipment
UL 877	(1993) Circuit Breakers and Circuit-Breaker Enclosures for Use in Hazardous (Classified) Locations
UL 886	(1994; Rev thru Feb 1994) Outlet Boxes and Fittings for Use in Hazardous (Classified) Locations

UL 891	(1994) Dead-Front Switchboards
UL 924	(1990; Rev thru Nov 1993) Emergency Lighting and Power Equipment
UL 935	(1993; Rev Feb 1993) Fluorescent-Lamp Ballasts
UL 943	(1993) Ground-Fault Circuit Interrupters
UL 1004	(1989; Rev thru Mar 1993) Electric Motors
UL 1010	(1991; Rev thru Feb 1994) Receptical-Plug Combinations for Use in Hazardous (Classified) Locations
UL 1022	(1979; Rev thru Jun 1984, Errata Nov 1985) Line Isolation Monitors
UL 1029	(1986; Rev thru Jul 1993) High-Intensity-Discharge Lamp Ballasts
UL 1047	(1990; Errata May 1991) Isolated Power Systems Equipment
UL 1236	(1992; Rev thru Mar 1994) Battery Chargers for Charging Engine-Starter Batteries
UL 1242	(1983; Rev thru Jul 1993) Intermediate Metal Conduit
UL 1561	(1986; Rev thru Jul 1992) Dry-Type General Purpose and Power Transformers
UL 1564	(1993) Industrial Battery Chargers
UL 1570	(1988; Rev thru Mar 1994) Fluorescent Lighting Fixtures
UL 1571	(1991; Rev thru Mar 1994) Incandescent Lighting Fixtures
UL 1572	(1991; Rev thru Mar 1994) High Intensity Discharge Lighting Fixtures
UL 1660	(1987) Liquid-Tight Flexible Nonmetallic Conduit

1.2 GENERAL

1.2.1 Rules

The installation shall conform to the requirements of NFPA 70 and NFPA 101, unless more stringent requirements are indicated herein or shown.

1.2.2 Coordination

The drawings indicate the extent and the general location and arrangement of equipment, conduit, and wiring. The Contractor shall become familiar with all details of the work and verify all dimensions in the field so that the outlets and equipment shall be properly located and readily accessible.

Lighting fixtures, outlets, and other equipment and materials shall be located to avoid interference with mechanical or structural features; otherwise, lighting fixtures shall be symmetrically located according to the room arrangement when uniform illumination is required, or asymmetrically located to suit conditions fixed by design and shown. Raceways, junction and outlet boxes, and lighting fixtures shall not be supported from sheet metal roof decks. If any conflicts occur necessitating departures from the drawings, details of and reasons for departures shall be submitted and approved prior to implementing any change. The Electrical Contractor shall coordinate the electrical work with HVAC and electrical

drawings and provide all power related wiring even if they are not shown on electrical drawings.

1.2.3 Hazardous Locations

Wiring in locations indicated shall conform to the NFPA 70 for Class I, Division 1 hazardous locations. Equipment shall be suitable for Group D operating temperature of 32 degrees C (90 degrees F). Wiring and equipment in locations indicated shall be of the classes, groups, divisions, and suitable for the operating temperature; all as indicated.

1.2.4 Standard Products

Material and equipment shall be a standard product of a manufacturer regularly engaged in the manufacture of the product and shall essentially duplicate items that have been in satisfactory use for at least 2 years prior to bid opening.

1.2.5 Identification Nameplates

Major items of electrical equipment and major components shall be permanently marked with an identification name to identify the equipment by type or function and specific unit number as indicated. Designation of motors shall coincide with their designation in the motor control center or panel. Unless otherwise specified, all identification nameplates shall be made of laminated plastic in accordance with FS L-P-387 with black outer layers and a white core. Edges shall be chamfered. Plates shall be fastened with black-finished round-head drive screws, except motors, or approved nonadhesive metal fasteners. When the nameplate is to be installed on an irregular-shaped object, the Contractor shall devise an approved support suitable for the application and ensure the proper installation of the supports and nameplates. In all instances, the nameplate shall be installed in a conspicuous location. At the option of the Contractor, the equipment manufacturer's standard embossed nameplate material with black paint-filled letters may be furnished in lieu of laminated plastic. The front of each panelboard, motor control center, switchgear, and switchboard shall have a nameplate to indicate the phase letter, corresponding color and arrangement of the phase conductors. The following equipment, as a minimum, shall be provided with identification nameplates:

Minimum 6.4 mm High Letters	Minimum 3.2 mm High Letters
Panelboards	Control Power Transformers
Starters	Control Devices
Safety Switches	Instrument Transformers
Motor Control Centers	
Transformers	
Equipment Enclosures	
Switchgear	
Switchboards	
Motors	

Minimum 1/4 inch High Letters	Minimum 1/8 inch High Letters
Panelboards	Control Power Transformers
Starters	Control Devices
Safety Switches	Instrument Transformers
Motor Control Centers	
Transformers	
Equipment Enclosures	
Switchgear	
Switchboards	
Motors	

Each panel, section, or unit in motor control centers, switchgear or similar assemblies shall be provided with a nameplate in addition to nameplates listed above, which shall be provided for individual compartments in the respective assembly, including nameplates which identify "future," "spare," and "dedicated" or "equipped spaces."

1.2.6 As Built Drawings

Following the project completion or turnover, within 30 days the Contractor shall furnish two sets of as built drawings to the Contracting Officer.

1.3 SUBMITTALS

The following shall be submitted in accordance with Section 01300 SUBMITTAL DESCRIPTIONS:

SD-04 Drawings

Electrical Work.

Detail drawings for all materials and equipment specified. Detail drawings shall consist of a complete list of equipment and materials, including manufacturer's descriptive and technical data; catalog cuts; and any special installation instructions that may be required. Drawings shall show applicable schematic diagrams; and equipment layout and anchorage and conduit and cable tray runs, anchorage, and support. Telephone system drawings showing actual layout, including locations, type any gauge of cables, and terminal assignment of wiring, after installation.

SD-09 Reports

Materials and Equipment.

The label or listing of the Underwriters Laboratories, Inc., shall be accepted as evidence that the materials or equipment conform to the applicable standards of that agency. In lieu of this label or listing, a statement from a nationally recognized, adequately equipped testing agency indicating that the items have been tested in accordance with required procedures and that the materials and equipment comply with all contract requirements will be accepted. However, materials and equipment installed in hazardous locations must bear the UL label unless the data submitted from other testing agency is specifically approved in writing by the Contracting Officer. Materials and equipment shall be approved based on the manufacturer's published data.

For other than equipment and materials specified to conform to UL publications, a manufacturer's statement indicating complete compliance with the applicable Federal Specification, or standard of the American Society for Testing and Materials, National Electrical Manufacturers Association, or other commercial standard, is acceptable.

SD-13 Certificates

Telephone Installer.

Qualifications of the telephone installer.

1.4 WORKMANSHIP

Materials and equipment shall be installed in accordance with recommendations of the manufacturer and as shown.

PART 2 PRODUCTS

2.1 MATERIALS AND EQUIPMENT

Materials and equipment shall conform to the respective publications and other requirements specified below. Materials and equipment not listed below shall be as specified elsewhere in this section.

2.1.1 Cables and Wires

Conductors in cables shall be annealed copper. Design is based on copper conductors. Cables shall be single-conductor type, unless otherwise indicated. Cables and wires shall conform to UL 44 for rubber-insulated type; UL 83 for the thermoplastic-insulated type THHN.

2.1.1.1 Low-Voltage Power Cables

Cables AWG No. 8 and smaller shall be THWN/THHN, THW/THH or RHW/RHH. Cables AWG No. 6 and larger shall be USE/RHW/RHH.

2.1.1.2 Service Entrance Cable

Type USE.

2.1.1.3 Grounding Cables

Grounding cables shall be bare or shall have green low-voltage insulation.

2.1.1.4 Cord Sets and Power-Supply Cords

UL 817.

2.1.1.5 Telephone Cables

ICEA S-80-576.

2.1.2 Cabinets for Communications

UL 50. Cabinets shall have boxes constructed of zinc-coated sheet steel. Cabinets shall be constructed with interior dimensions not less than those indicated. Trim shall be fitted with hinged door and flush catch. Doors shall provide maximum-size openings to the box interiors. Boxes shall be provided with a 15 mm (5/8 inch) plywood back board having a two-coat insulating varnish finish.

2.1.3 Connector Blocks

Connector blocks shall be type 66 equipped with punch down clips.

2.1.4 Telephone Backboards

Backboards shall be 15 mm (5/8 inch) plywood having a two-coat insulating varnish finish.

2.1.5 Chargers, Battery

NEMA PE 5, NEMA PE 7, UL 1236, and UL 1564. Battery chargers shall be general purpose, continuous current output, with solid state rectifiers. Means shall be provided to regulate and to adjust the dc output voltage. Chargers shall have continuous current ratings of 10 to 15 percent higher than battery current outputs based upon an 8-hour discharge.

2.1.6 Circuit Breakers

Circuit breakers shall have voltage, current and interrupting ratings as indicated. Fully rated circuit breakers or series rated circuit breakers in combinations approved for series applications by UL shall be provided as indicated, for specific pieces of distribution equipment, to obtain the specified interrupting rating. The fully rated circuit breakers will be acceptable where the series rated is specified. Panelboards or individual enclosures containing series rated circuit breakers shall be appropriately marked for use with the specified breakers at the designated short circuit level.

2.1.6.1 Molded-Case and Insulated-Case Circuit Breakers

NEMA AB 1 and UL 489 for circuit breakers, and UL 877 for circuit breakers and circuit breaker enclosures in hazardous (classified) locations.

a. Molded-Case Circuit Breakers: Single-pole breakers shall be full module size; two poles shall not be installed in a single module. Multipole breakers shall be of the common-trip type having a single operating handle, but for sizes of 100 amperes or less may consist of single-pole breakers permanently factory assembled into a multipole unit having an internal, mechanical, nontamperable common-trip mechanism and external handle ties. Breakers coordinated with current-limiting fuses shall have a combined interrupting capacity of 100,000 symmetrical amperes. All poles of associated breakers shall open if any fuse blows.

b. Insulated-Case, Systems-Type Circuit Breakers: Breakers shall have continuous, short time withstand, and interrupting current ratings and frame sizes as indicated. Breakers shall have adjustable long time ground fault solid state trip elements as indicated. Breakers shall be stored energy, electrically operated type.

2.1.6.2 Low-Voltage-Power

IEEE C37.13 and ANSI C37.16. Breakers shall have continuous, short time withstand, and interrupting current ratings and frame sizes as indicated. Breakers shall have adjustable, long time ground fault solid state trip elements as indicated. Breakers shall be stored energy, electrically operated, except solenoid operated breakers are permitted in 600 amperes frame or smaller electrically operated breakers.

2.1.6.3 Ground Fault Circuit Interrupters

UL 943. Breakers equipped with ground fault interrupters shall have ground fault class, interrupting capacity, and voltage and current ratings as indicated.

2.1.7 Conduit and Tubing

2.1.7.1 Electrical, Zinc-Coated Steel Metallic Tubing (EMT)

UL 797.

2.1.7.2 Electrical Plastic Tubing and Conduit

NEMA TC 2.

2.1.7.3 Flexible Conduit, Steel and Plastic

General-purpose type, UL 1; liquid tight, UL 360, and UL 1660

2.1.7.4 Intermediate Metal Conduit

UL 1242.

2.1.7.5 PVC Coated Rigid Steel Conduit

NEMA RN 1.

2.1.7.6 Rigid Metal Conduit

UL 6.

2.1.7.7 Rigid Plastic

NEMA TC 2, UL 651 and UL 651A.

2.1.7.8 Surface Metal Electrical Raceways and Fittings

UL 5.

2.1.8 Conduit and Device Boxes and Fittings

2.1.8.1 Boxes, Metallic Outlet

NEMA OS 1 and UL 514A.

2.1.8.2 Boxes, Nonmetallic, Outlet and Flush-Device Boxes and Covers

NEMA OS 2 and UL 514C.

2.1.8.3 Boxes, Outlet for Use in Hazardous (Classified) Locations

UL 886.

2.1.8.4 Boxes, Switch (Enclosed), Surface-Mounted

UL 98.

2.1.8.5 Fittings for Conduit and Outlet Boxes

UL 514B.

2.1.8.6 Fittings for Use in Hazardous (Classified) Locations

UL 886.

2.1.8.7 Fittings, PVC, for Use with Rigid PVC Conduit and Tubing

UL 514B.

2.1.9 Conduit Coatings Plastic Resin System

FS L-C-530 or NEMA RN 1, Type A-40.

2.1.10 Connectors, Wire Pressure

2.1.10.1 Copper Conductors

UL 486A.

2.1.11 Electrical Grounding and Bonding Equipment

UL 467.

2.1.11.1 Ground Rods

Ground rods shall be of copper-clad steel conforming to UL 467 not less than 19.1 mm (3/4 inch) in diameter by 3.1 meter (10 feet)in length of the sectional type driven full length into the earth.

2.1.11.2 Ground Bus

The ground bus shall be bare conductor or flat copper in one piece, if practicable.

2.1.12 Enclosures

NEMA ICS 6 or NEMA 250 or UL 698 for use in hazardous (classified) locations, unless otherwise specified.

2.1.12.1 Cabinets and Boxes

UL 50.

2.1.12.2 Circuit Breaker

UL 489.

2.1.13 Fixtures, Lighting and Fixture Accessories/Components

Standard Drawing 40-06-04 sheets referenced hereinafter and enclosed as an integral part of these specifications, and additional fixtures shown on contract drawings. Fixtures, accessories and components, including ballasts, lampholders, lamps, starters and starter holders, shall conform to industry standards specified below.

2.1.13.1 Fixture, Auxiliary or Emergency

UL 924.

2.1.13.2 Incandescent Fixture

NEMA LE 4 for ceiling compatibility of recessed fixtures and UL 1571.

2.1.13.3 Fluorescent

a. Fixture: NEMA LE 4 for ceiling compatibility of recessed fixtures and UL 1570. Fixtures shall be plainly marked for proper lamp and ballast type to identify lamp diameter, wattage, color and start type. Marking shall be readily visible to service personnel, but not visible from normal viewing angles.

1. Electronic Ballast. Electronic ballasts shall consist of a rectifier, high frequency inverter, and power control and regulation circuitry. The ballasts shall be UL listed, Class P, with a Class A sound rating and shall contain no PCBs. Ballasts shall meet 47 CFR 18 for electromagnetic interference and shall not interfere with the operation of other electrical equipment. Design shall withstand line transients per IEEE C62.41, Category A. Unless otherwise indicated, the minimum number of ballasts shall be used to serve each individual fixture, using one, two, three or four lamp ballasts. A single ballast may be used to serve multiple fixtures if they are continuous mounted, factory manufactured for that installation with an integral wireway and are identically controlled.
   (a) Light output regulation shall be +/- 10%.
   (b) Voltage input regulation shall be +/- 10%.
   (c) Lamp current crest factor shall be no more than 1.7.
   (d) Ballast factor shall be not less than 85% nor more than 100%, unless otherwise indicated.
   (e) A 60 Hz filter shall be provided. Flicker shall be no more than 15% with any lamp suitable for the ballast.
   (f) Ballast case temperature shall not exceed 25 degree Celsius rise above 40 degree Celsius ambient, when tested in accordance with UL 935.
   (g) Input current third harmonic shall not exceed 32 percent total harmonic distortion or 27.5 percent of the third triplens.
   (h) Power factor shall not be less than 0.9.
   (i) Ballasts shall operate at a frequency of 20 KHz or more.
   (j) Operating filament voltage shall be 2.5 to 4.5 volts.
   (k) Warranty. Three year full warranty including a $10 labor allowance.
   (l) Ballast Efficacy Factor (BEF) shall be in accordance with the following table. Ballasts and lamps shall be matching rapid start or instant start as indicated on the following table. If 32W-F32-T8 lamps and ballasts are used, they must be either all rapid start or all instant start.

ELECTRONIC FLUORESCENT BALLAST EFFICACY FACTORS

LAMP TYPE	TYPE OF STARTER & LAMP	NOMINAL OPERATIONAL INPUT VOLTAGE	NUMBER OF LAMPS	MIN. BALLAST EFFICACY FACTOR
32W F32 T8	rapid or instant start	120 or 277 V	1	2.4
			2	1.4
			3	1.0
			4	0.8

*For ballasts not specifically designed for use with dimming controls
The BEF is calculated using the formula:
BEF = Ballast Factor (in percent) / Power Input
Where Power Input = Total Wattage of Combined Lamps and Ballasts.

b. Lampholders, Starters, and Starter Holders: UL 542.

2.1.13.4 High-Intensity-Discharge

a. Fixture: NEMA LE 4 for ceiling compatibility of recessed fixtures and UL 1572.

b. Ballasts: ANSI C82.4 for multiple supply types and UL 1029.

2.1.14 Fuses and Fuseholders

2.1.14.1 Fuses, Low Voltage Cartridge Type

NEMA FU 1.

2.1.14.2 Fuses, High-Interrupting-Capacity, Current-Limiting Type

UL 198C.

2.1.14.3 Fuses, Class K, High-Interrupting-Capacity Type

UL 198D.

2.1.14.4 Fuses, Class H

UL 198B.

2.1.14.5 Fuses, Class R

UL 198E.

2.1.14.6 Fuses, Class T

UL 198H.

2.1.14.7 Fuses, Plug Type

UL 198F.

2.1.14.8 Fuses for Supplementary Overcurrent Protection

UL 198G.

2.1.14.9 Fuseholders

UL 512.

2.1.15 Instruments, Electrical Indicating

ANSI C39.1.

2.1.16 Motors, ac, Fractional and Integral Kilowatt (Horsepower)

Motors, ac, fractional and integral kilowatt, (horsepower,) 373.0 kW (500 hp) and smaller shall conform to NEMA MG 1 and UL 1004 for motors; NEMA MG 10 for energy management selection of polyphase motors.

2.1.16.1 Kilowatt (Horsepower) Rating

The kilowatt (horsepower) rating of motors should be limited to no more than 125 percent of the maximum load being served unless a NEMA standard size does not fall within this range. In this case, the next larger NEMA standard motor size should be used.

2.1.16.2 Motor Efficiencies

All permanently wired polyphase motors of 746 W (1 hp) or more shall meet the minimum full-load efficiencies as indicated in the following table, and as specified in this specification. Motors of 746 W (1 hp) or more with open, dripproof or totally enclosed fan cooled enclosures shall be high efficiency type, unless otherwise indicated. Motors provided as an integral part of motor driven equipment are excluded from this requirement if a minimum seasonal or overall efficiency requirement is indicated for that equipment by the provisions of another section.

Minimum Motor Efficiencies

kW	Std. Efficiency	High Efficiency
0.746 (1 hp)	77.0	85.5
1.12 (1.5 hp)	78.5	85.5
1.49 (2 hp)	78.5	85.5
2.24 (3 hp)	78.5	88.5
3.73 (5 hp)	82.5	88.5
5.60 (7.5 hp)	84.0	90.0
7.46 (10 hp)	85.5	90.0
11.2 (15 hp)	85.5	91.0
14.9 (20 hp)	87.5	92.0
18.7 (25 hp)	88.5	92.0
22.4 (30 hp)	88.5	92.0
29.8 (40 hp)	88.5	92.0
37.3 (50 hp)	89.0	92.5
44.8 (60 hp)	89.0	92.5
56.9 (75 hp)	89.0	95.5

2.1.17 Motor Controls and Motor Control Centers

NEMA ICS 1, NEMA ICS 2, NEMA ICS 3 and NEMA ICS 6, and UL 508 and UL 845.

2.1.18 Panelboards

Dead-front construction, NEMA PB 1 and UL 67.

2.1.19 Receptacles

2.1.19.1 Hospital Grade

UL 498.

2.1.19.2 Ground Fault Interrupters

UL 943, Class A or B.

2.1.19.3 Hazardous (Classified) Locations

UL 1010.

2.1.20 Service Equipment

UL 869A.

2.1.21 Splice, Conductor

UL 486C.

2.1.22 Switchboard, Dead Front Distribution

NEMA PB 2 and UL 891.

2.1.23 Switchgear Assemblies, Power

IEEE C37.20.1.

2.1.24 Snap Switches

UL 20.

2.1.25 Tapes

2.1.25.1 Plastic Tape

UL 510.

2.1.28.2 Rubber Tape

UL 510.

2.1.26 Transformers

2.1.26.1 Conventional Dry-Type

IEEE C57.12.01, ANSI C57.12.10, IEEE C57.12.80, IEEE C57.12.91, IEEE C57.94, IEEE C57.98, IEEE C57.105 and UL 1561 in addition to the specific standards referenced below.

a. Distribution: Ventilated, 1 to 500 kVA, single-phase, and 15 to 500 kVA, three-phase with high-voltage 601 to 34500 volts, low-voltage 120-600 volts: ANSI C57.12.50.

b. Specialty or General Applications: NEMA ST 20 and UL 506 unless otherwise shown or specified.

c. Instrument: ANSI C12.11 and IEEE C57.13 with current ratio or voltage ratings shown or specified.

2.1.27 Isolated Power System Equipment

UL 1047, with monitor UL 1022.

2.1.28 Watthour Meters

Watthour meters shall conform to ANSI C12.1 and ANSI C12.10, except numbered terminal wiring sequence and case size may be the manufacturer's standard. Watthour meters shall be of the drawout switchboard type having a 15-minute, cumulative form, demand register meeting ANSI C12.4 and provided with not less than two and one-half stators. Watthour demand meters shall have factory-installed electronic pulse initiators meeting the requirements of ANSI C12.1. Pulse initiators shall be solid-state devices incorporating light-emitting diodes, phototransistors, and power transistors, except that mercury-wetted output contacts are acceptable. Initiators shall be totally contained within watthour demand meter enclosures, shall be capable of operating up to speeds of 500 pulses per minute with no false pulses, and shall require no field adjustments. Initiators shall be calibrated for a pulse rate output of one pulse per 1/4 disc revolution of the associated meter and shall be compatible with the indicated equipment.

2.1.29 Wiring Devices

NEMA WD 1 for general-purpose wiring devices, and NEMA WD 6 for dimensional requirements of wiring devices.

2.1.30 Telephone Jacks

47 CFR 68, plastic shall be class VO in accordance with UL 94.

PART 3 EXECUTION

3.1 GROUNDING

Grounding shall be in conformance with NFPA 70, the contract drawings, and the following specifications.

3.1.1 Ground Rods

The resistance to ground shall be measured using the fall-of-potential method described in IEEE Std 81. The maximum resistance of a driven ground shall not exceed 25 ohms under normally dry conditions. If this resistance cannot be obtained with a single rod, additional sections may be coupled and driven with the first rod. In high-ground-resistance, UL listed chemically charged ground rods may be used. If the resultant resistance exceeds 25 ohms measured not less than 48 hours after rainfall, the Contracting Officer shall be notified immediately. Connections below grade shall be fusion welded. Connections above grade shall be fusion welded or shall use UL 467 approved connectors.

3.1.2 Ground Bus

Ground bus shall be provided in the electrical equipment rooms as indicated. Noncurrent-carrying metal parts of transformer neutrals and other electrical equipment shall be effectively grounded by bonding to the bus. The ground bus shall be bonded to both the entrance ground, and to a ground rod or rods as specified above having the upper ends terminating approximately 100 mm (4 inches) above the floor. Connections and splices shall be of the brazed, welded, bolted, or pressure-connector type, except that pressure connectors or bolted connections shall be used for connections to removable equipment.

3.1.3 Grounding Conductors

A green ground wire shall be furnished regardless of the type of conduit. All equipment grounding conductors, including metallic raceway systems used as such, shall be bonded or joined together in each wiring box or equipment enclosure. Metallic raceways and grounding conductors shall be checked to assure that they are wired or bonded into a common junction. Metallic boxes and enclosures, if used, shall also be bonded to these grounding conductors by an approved means per NFPA 70. When boxes for receptacles, switches, or other utilization devices are installed, any designated grounding terminal on these devices shall also be bonded to the equipment grounding conductor junction with a short jumper.

3.2 WIRING METHODS

3.2.1 General Requirements

Unless otherwise indicated, wiring shall consist of insulated conductors installed in rigid aluminum or rigid zinc-coated steel conduit, rigid plastic conduit, electrical metallic and/or nonmetallic tubing, or intermediate metal conduit.

3.2.2 Conduit and Tubing Systems

Conduit and tubing systems shall be installed as indicated. Conduit sizes shown are based on use of copper conductors with insulation types as described in paragraph WIRING METHODS. Minimum size of raceways shall be 15 mm (1/2 inch). Only metal conduits will be permitted when conduits are required for shielding or other special purposes indicated, or when required by conformance to NFPA 70. Nonmetallic conduit and tubing may be used in damp, wet or corrosive locations when permitted by NFPA 70 and the conduit or tubing system is provided with appropriate boxes, covers, clamps, screws or other appropriate type of fittings. Electrical metallic

tubing may be installed only within buildings. Electrical metallic tubing installed in concrete or grout shall be provided with concrete tight fittings. EMT shall not be installed in damp or wet locations, or the air space of exterior masonry cavity walls. Bushings, manufactured fittings or boxes providing equivalent means of protection shall be installed on the ends of all conduits and shall be of the insulating type, where required by NFPA 70. Only UL listed adapters shall be used to connect EMT to rigid metal conduit, cast boxes, and conduit bodies. Aluminum conduit may be used only where installed exposed in dry locations. Non-aluminum sleeves shall be used where aluminum conduit passes through concrete floors and firewalls. Penetrations of above grade floor slabs, time-rated partitions and fire walls shall be firestopped in accordance with Section 07270 FIRESTOPPING. Except as otherwise specified, IMC may be used as an option for rigid steel conduit in areas as permitted by NFPA 70. Raceways shall not be installed under the firepits of boilers and furnaces and shall be kept 150 mm (6 inches) away from parallel runs of flues, steam pipes and hot-water pipes. Raceways shall be concealed within finished walls, ceilings, and floors unless otherwise shown. Raceways crossing structural expansion joints shall be provided with suitable expansion fittings or other suitable means to compensate for the building expansion and contraction and to provide for continuity of grounding.

3.2.2.1 Below Slab-on-Grade or in the Ground

Electrical wiring below slab-on-grade shall be protected by a conduit system. Conduit passing vertically through slabs-on-grade shall be rigid steel or IMC. Rigid steel or IMC conduits installed below slab-on-grade or in the earth shall be field wrapped with 0.254 mm (0.010 inch) thick pipe-wrapping plastic tape applied with a 50 percent overlay, or shall have a factory-applied polyvinyl chloride, plastic resin, or epoxy coating system.

3.2.2.2 Installing in Slabs Including Slabs on Grade

Conduits shall be installed as close to the middle of concrete slabs as practicable without disturbing the reinforcement. Outside diameter shall not exceed 1/3 of the slab thickness and conduits shall be spaced not closer than 3 diameters on centers except at cabinet locations where the slab thickness shall be increased as approved by the Contracting Officer.

3.2.2.3 Exposed Raceways

Exposed raceways shall be installed parallel or perpendicular to walls, structural members, or intersections of vertical planes and ceilings. Raceways under raised floors and above accessible ceilings shall be considered as exposed installations in accordance with NFPA 70 definitions.

3.2.2.4 Changes in Direction of Runs

Changes in direction of runs shall be made with symmetrical bends or cast-metal fittings. Field-made bends and offsets shall be made with an approved hickey or conduit-bending machine. Crushed or deformed raceways shall not be installed. Trapped raceways in damp and wet locations shall be avoided where possible. Care shall be taken to prevent the lodgment of plaster, dirt, or trash in raceways, boxes, fittings and equipment during the course of construction. Clogged raceways shall be entirely freed of obstructions or shall be replaced.

3.2.2.5 Supports

Metallic conduits and tubing shall be securely and rigidly fastened in place at intervals of not more than 3 meters (10 feet) and within 900 mm (3 feet) of boxes, cabinets, and fittings, with approved pipe straps, wall brackets, conduit clamps, conduit hangers, threaded C-clamps, or ceiling trapeze. C-clamps or beam clamps shall have strap or rod-type retainers. Rigid plastic conduits (if permitted as a wiring method) shall be supported as indicated above, except that they will be supported at intervals as indicated in NFPA 70. Loads and supports shall be coordinated with supporting structure to prevent damage or deformation to the structures,

but no load shall be applied to joist bridging. Fastenings shall be by toggle bolts on hollow masonry units; by expansion bolts on concrete or brick; by machine screws, welded threaded studs, heat-treated or spring-steel-tension clamps on steel work. Nail-type nylon anchors or threaded studs driven in by a powder charge and provided with lock washers and nuts may be used in lieu of expansion bolts or machine screws. Raceways or pipe straps shall not be welded to steel structures. Holes cut to a depth of more than 40 mm (1-1/2 inches) in reinforced concrete beams or to a depth of more than 20 mm (3/4 inch) in concrete joists shall avoid cutting the main reinforcing bars. Holes not used shall be filled. In partitions of light steel construction, sheet-metal screws may be used. Conduit shall not be supported using wire or nylon ties. Raceways shall be installed as a complete system and be independently supported from the structure. Upper raceways shall not be the support of lower raceways. Supporting means will not be shared between electrical raceways and mechanical piping or ducts and shall not be fastened to hung ceiling supports. Conduits shall be fastened to all sheet-metal boxes and cabinets with two locknuts where required by the NFPA 70, where insulating bushings are used, and where bushings cannot be brought into firm contact with the box; otherwise, a single locknut and bushing may be used. Threadless fittings for electrical metallic tubing shall be of a type approved for the conditions encountered.

A pull wire shall be inserted in each empty raceway in which wiring is to be installed by others if the raceway is more than 15 meters (50 feet) in length and contains more than the equivalent of two 90-degree bends, or where the raceway is more than 45 meters (150 feet) in length. The pull wire shall be of No. 14 AWG zinc-coated steel, or of plastic having not less than 1.4 MPa (200 psi) tensile strength. Not less than 254 mm (10 inches) of slack shall be left at each end of the pull wire. Additional support for horizontal runs is not required when EMT rests on steel stud cutouts.

3.2.2.6 Communications Raceways

Communications raceways indicated shall be installed in accordance with the previous requirements for conduit and tubing and with the additional requirements that no length of run shall exceed 15 meters (50 feet) for 15 mm (1/2 inch) and 20 mm (3/4 inch) sizes, and 30 meters (100 feet) for 25 mm (1 inch) or larger sizes, and shall not contain more than two 90-degree bends or the equivalent. Additional pull or junction boxes shall be installed to comply with these limitations whether or not indicated. Inside radii of bends in conduits of 25 mm (1 inch) size or larger shall be not less than ten times the nominal diameter.

3.2.3 Cable Systems

Cables shall be installed concealed behind ceiling or wall finish where practicable. Cables shall be threaded through holes bored on the approximate centerline of wood members; notching of surfaces will not be permitted. Sleeves shall be provided through bond beams of masonry-block walls for threading cables through hollow spaces. Exposed cables shall be installed parallel or at right angles to walls or structural members. In rooms or areas not provided with ceiling or wall finish, cables and outlets shall be installed so that a room finish may be applied in the future without disturbing the cables or resetting the boxes. Exposed nonmetallic-sheathed cables less than 1.2 meters (4 feet) above floors shall be protected from mechanical injury by installation in conduit or tubing.

3.2.4 Cables and Conductors

Wire connectors of insulating material or solderless pressure connectors properly taped shall be utilized for all splices. Aluminum contact surfaces of conductors and connectors shall be cleaned and covered with antioxidant compound prior to making of connections.

3.2.4.1 Sizes

All sizes are based on copper conductors, unless otherwise indicated. Sizes shall be not less than indicated. Branch-circuit conductors shall be not smaller than No. 12 AWG. Conductors for branch circuits of 120 volts more than 30 meters (100 feet) long and of 277 volts more than 70 meters (230 feet) long, from panel to load center, shall be no smaller than No. 10 AWG. Class 1 remote control and signal circuit conductors shall be not less than No. 14 AWG. Class 2 remote control and signal circuit conductors shall be not less than No. 16 AWG.

The conductor sizes are based on the use of TW insulation for conductors smaller than No. 1/0 AWG and THW insulation for conductors No. 1/0 and larger, except where otherwise indicated.

Higher temperature rated conductors will be permitted to be used, if the UL tested temperature ratings for which the equipment in the circuit is marked are not exceeded.

Conductor sizes for nonlinear loads shall be based on the use of minimum 75 degrees C insulated conductors for branch circuits and feeders.

3.2.4.2 Power Conductor Identification

Phase conductors shall be identified by color coding. The color of the insulation on phases A, B, and C respectively (for three phase) or phases A and B respectively (for single phase) of different voltage systems shall be as follows:

120/208 volt, 3-phase: Black, red, and blue.
277/480 volt, 3-phase: Brown, orange, and yellow.

Conductor phase and voltage identification shall be made by color-coded insulation for all conductors smaller than No. 6 AWG. For conductors No. 6 AWG and larger, identification shall be made by color-coded insulation, or conductors with black insulation may be furnished and identified by the use of half-lapped bands of colored electrical tape wrapped around the insulation for a minimum of 75 mm (3 inches) of length near the end, or other method as submitted by the Contractor and approved by the Contracting Officer. Conductor identification shall be provided within each enclosure where a tap, splice, or termination is made. Phase identification by a particular color shall be maintained continuously for the length of a circuit, including junctions.

3.2.4.3 Control Conductor Identification

Control circuit conductor identification shall be made by color-coded insulated conductors, plastic-coated self-sticking printed markers, permanently attached stamped metal foil markers, or equivalent means as approved. Control circuit terminals of equipment shall be properly identified. Terminal and conductor identification shall match that shown on approved detail drawings. Hand lettering or marking is not acceptable.

3.3 BOXES AND SUPPORTS

Boxes shall be provided in the wiring or raceway systems wherever required for pulling of wires, making connections, and mounting of devices or fixtures. Boxes for metallic raceways, 101.6 by 101.6 mm (4 in. by 4 in.) nominal size and smaller, shall be of the cast-metal hub type when located in normally wet locations, when flush and surface mounted on outside of exterior surfaces, or when located in hazardous areas. Large size boxes shall be NEMA 1, 3R, or as shown. Boxes in other locations shall be sheet steel except that aluminum boxes may be used with aluminum conduit, and nonmetallic boxes may be used with nonmetallic conduit and tubing or nonmetallic sheathed cable system, when permitted by NFPA 70. In partitions of light steel construction bar hangers with 25 mm (1 inch) long studs, mounted between metal wall studs or metal stud "C" brackets snapped on and tab-locked to metal wall studs, shall be used to secure boxes to the building structure. When "C" brackets are used, additional box support

shall be provided on the side of the box opposite the brackets. The edges of boxes for electrical devices shall be flush with the finished surfaces in gypsum and plasterboard installations. Boxes for mounting lighting fixtures shall be not less than 101.6 mm (4 inches) square except smaller boxes may be installed as required by fixture configuration, as approved. Boxes installed for concealed wiring shall be provided with suitable extension rings or plaster covers, as required. The bottom of boxes installed in masonry-block walls for concealed wiring shall be flush with the top of a block to minimize cutting of blocks, and boxes shall be located horizontally to avoid cutting webs of block. Indicated elevations are approximate, except where minimum mounting heights for hazardous areas are required by NFPA 70. Unless otherwise indicated, boxes for wall switches shall be mounted 1.2 meters (48 inches) above finished floors. Switch and outlet boxes on opposite sides of fire rated walls shall be separated by a minimum horizontal distance of 600 mm. (24 inches.) Cast-metal boxes installed in wet locations and boxes installed flush with the outside of exterior surfaces shall be gasketed.

Separate boxes shall be provided for flush or recessed fixtures when required by the fixture terminal operating temperature, and fixtures shall be readily removable for access to the boxes unless ceiling access panels are provided. Boxes and supports shall be fastened to wood with wood screws or screw-type nails of equal holding strength, with bolts and metal expansion shields on concrete or brick, with toggle bolts on hollow masonry units, and with machine screws or welded studs on steel work. Threaded studs driven in by powder charge and provided with lockwashers and nuts, or nail-type nylon anchors may be used in lieu of expansion shields, or machine screws. In open overhead spaces, cast-metal boxes threaded to raceways need not be separately supported except where used for fixture support; cast-metal boxes having threadless connectors and sheet metal boxes shall be supported directly from the building structure or by bar hangers. Hangers shall not be fastened to or supported from joist bridging. Cast-metal boxes with 2.4 mm (3/32 in.) wall thickness are acceptable. Where bar hangers are used, the bar shall be attached to raceways on opposite sides of the box and the raceway shall be supported with an approved type fastener not more than 600 mm (24 inches) from the box. Penetration of more than 38.1 mm (1-1/2 in.) into reinforced-concrete beams or more than 19.1 mm (3/4 in.) into reinforced-concrete joists shall avoid cutting any main reinforcing steel.

3.3.1 Boxes for Use with Raceway Systems

Boxes for use with raceway systems shall be not less than 38.1 mm (1-1/2 in.) deep except where shallower boxes required by structural conditions are approved. Sheet metal boxes for other than lighting fixtures shall be not less than 101.6 mm (4 in.) square except that 101.6 by 50.8 mm (4 by 2 inch) boxes may be used where only one raceway enters the outlet. Contractor shall size the telephone outlet boxes as required by the number, size and type of outlets specified and as required by the outlets furnished by the Contractor.

3.3.2 Pull Boxes

Pull boxes of not less than the minimum size required by NFPA 70 shall be constructed of aluminum or galvanized sheet steel, except where cast-metal boxes are required in locations specified above. Boxes shall be furnished with screw-fastened covers. Where several feeders pass through a common pull box, the feeders shall be tagged to indicate clearly the electrical characteristics, circuit number, and panel designation.

3.3.3 Clock Outlet

Clock outlet, for use in other than a wired clock system, shall consist of an outlet box, a plaster cover where required, and a single receptacle with clock-outlet plate. The receptacle shall be recessed sufficiently within the box to allow the complete insertion of a standard cap, flush with the plate. A suitable clip or support for hanging the clock shall be secured to the top of the plate. Material and finish of the plate shall be as specified in paragraph DEVICE PLATES.

3.3.4 Floor Outlets

Floor outlets shall be adjustable and each outlet shall consist of a cast-metal body with threaded openings for conduits, adjustable ring, and cover plate with 15 mm (1/2 in.) or 20 mm (3/4 in.) threaded flush plug. Each telephone outlet shall consist of a horizontal cast housing with a 25 mm (1 inch) bushed side opening. Each receptacle outlet shall consist of a horizontal cast housing with a receptacle as specified. Gaskets shall be used where necessary to ensure a watertight installation. Plugs with installation instructions shall be delivered to the Contracting Officer at the job site for capping outlets upon removal of service fittings.

3.3.5 Conduit Stub-Ups

Conduits stubbed up through concrete floors for connections to freestanding equipment shall be provided with a short elbow and an adjustable top or coupling threaded inside for plugs, set flush with the finished floor. Wiring shall be extended in rigid threaded conduit to equipment, except that where required, flexible conduit may be used 150 mm (6 inches) above the floor. Screwdriver-operated threaded flush plugs shall be installed in conduits from which no equipment connections are made to suit the devices installed.

3.4 DEVICE PLATES

One-piece type device plates shall be provided for all outlets and fittings. Plates on unfinished walls and on fittings shall be of zinc-coated sheet steel, cast-metal, or impact resistant plastic having rounded or beveled edges. Plates on finished walls shall be of satin finish corrosion resistant steel or satin finish chromium plated brass. Screws shall be of metal with countersunk heads, in a color to match the finish of the plate. Plates shall be installed with all four edges in continuous contact with finished wall surfaces without the use of mats or similar devices. Plaster fillings will not be permitted. Plates shall be installed with an alignment tolerance of 1.6 mm (1/16 inch). The use of sectional-type device plates will not be permitted. Plates installed in wet locations shall be gasketed and provided with a hinged, gasketed cover, unless otherwise specified.

3.5 RECEPTACLES

3.5.1 Single and Duplex

Single and duplex receptacles shall be rated 20 amperes, 125 volts, two-pole, three-wire, grounding type with polarized parallel slots. Bodies shall be ivory and supported by mounting strap having plaster ears. Contact arrangement shall be such that contact is made on two sides of an inserted blade. Receptacle shall be side- or back-wired with two screws per terminal. The third grounding pole shall be connected to the metal mounting yoke. Switched receptacles shall be the same as other receptacles specified except that the ungrounded pole of each suitable receptacle shall be provided with a separate terminal. Only the top receptacle of a duplex receptacle shall be wired for switching application. Receptacles with ground fault circuit interrupters shall have the current rating as indicated, and shall be UL Class A type unless otherwise shown. Ground fault circuit protection shall be provided as required by NFPA 70 and as indicated on the drawings.

3.5.2 Weatherproof

Weatherproof receptacles shown shall be mounted in a box with a gasketed, weatherproof cast-metal cover plate.

3.5.3 Receptacles, 15-Ampere, 250-Volt

Receptacles, 15-ampere, 250-volt, shall be single two-pole, three-wire, grounding type with bodies of ivory phenolic compound supported by mounting yoke having plaster ears. The third grounding pole shall be connected to

the metal yoke. Each receptacle shall be provided with a mating cord-grip plug.

3.5.4 Receptacles, 20-Ampere, 250-Volt

Receptacles, single, 20-ampere, 250-volt, shall be molded plastic, two-pole, three-wire or three-pole, four-wire, grounding type complete with appropriate mating cord-grip plug.

3.5.5 Special-Purpose or Heavy-Duty Receptacles

Special-purpose or heavy-duty receptacles shall be of the type and of ratings and number of poles indicated or required for the anticipated purpose. Contact surfaces may be either round or rectangular. One appropriate straight or angle-type plug shall be furnished with each receptacle. Locking of receptacles, indicated to be the locking type, shall be accomplished by the rotation of the plug.

3.6 WALL SWITCHES

Wall switches shall be of the totally enclosed tumbler type. The wall switch handle and switch plate color shall harmonize with the color of the respective wall. Wiring terminals shall be of the screw type or of the solderless pressure type having suitable conductor-release arrangement. Not more than one switch shall be installed in a single-gang position. Switches shall be rated 20-ampere 120 or 277-volt for use on alternating current only. Pilot lights indicated shall consist of yoke-mounted candelabra-base sockets rated at 75 watts, 125 volts, and fitted with glass or plastic jewels. A clear 6-watt lamp shall be furnished and installed in each pilot switch. Jewels for use with switches controlling motors shall be green, and jewels for other purposes shall be red.

3.7 SERVICE EQUIPMENT

Service-disconnecting means shall be of the fusible safety switch type as indicated with external handle for manual operation. When service disconnecting means is a part of an assembly, the assembly shall be listed as suitable for service entrance equipment. Enclosures shall be sheet metal with hinged cover for surface mounting unless otherwise indicated.

3.8 PANELBOARDS AND LOADCENTERS

Circuit breakers and switches used as a motor disconnecting means, and not in sight of the motor and the driven machinery location, shall be capable of being locked in the open position. Door locks shall be keyed alike. Nameplates shall be as approved. Directories shall be typed to indicate loads served by each circuit and mounted in a holder behind a clear protective covering. Busses shall be copper or aluminum.

3.8.1 Loadcenters

Loadcenters shall be circuit breaker equipped.

3.8.2 Panelboards

Panelboards shall be circuit breaker. Switches serving as motor disconnect means shall be horsepower rated in conformance with UL 98.

3.9 POWER-SWITCHGEAR AND DEAD FRONT DISTRIBUTION SWITCHBOARDS

Assemblies shall be metal-enclosed, freestanding general-purpose ventilated type and shall be installed to provide front access. Busses shall be copper. Assembly shall be approximately 2.3 meters (90 inches) high; arrangement of circuit breakers shall be as indicated. The Ampere Interrupting Capacity (A.I.C.) rating of the switchgear, switchboards and circuit breakers, fuses shall be based on the maximum fault current available.

3.9.1 Circuit Breakers

Circuit breakers shall be stationary, low-voltage power circuit breakers molded-case circuit breakers molded-case circuit breakers coordinated with current-limiting fuses.

3.9.2 Auxiliary Equipment

3.9.2.1 Instruments

Instruments shall be long scale, 172.7 mm (6.8 in.) minimum, semiflush rectangular, indicating or digital switchboard type, mounted at eye level.

a. Ammeter, range 0 to 1,200 amperes, complete with selector switch having off position and positions to read each phase current.

b. Voltmeter, range 0 to 480 volts, complete with selector switch having off position and positions to read each phase to phase voltage.

3.9.2.2 Instrument Transformers

a. Potential transformers shall be rated 480 to 120 volts.

b. Current transformers shall be rated 1,200 to 5 amperes.

3.9.2.3 Control Switch

A control switch with indicating lights shall be provided for each electrically operated breaker.

3.10 FUSES

Equipment provided under this contract shall be provided with a complete set of properly rated fuses when the equipment manufacturer utilize fuses in the manufacture of the equipment, or if current-limiting fuses are required to be installed to limit the ampere-interrupting capacity of circuit breakers or equipment to less than the maximum available fault current at the location of the equipment to be installed. Fuses shall have a voltage rating of not less than the phase-to-phase circuit voltage, and shall have the time-current characteristics required for effective power system coordination.

3.10.1 Plug Fuses

Plug fuses shall be of the nonrenewable time-delay type and shall be used for circuits rated 125 volts or less and 30 amperes or less.

3.10.2 Cartridge Fuses; Noncurrent-Limiting Type

Cartridge fuses of the noncurrent-limiting type shall be Class H, nonrenewable, dual element, time lag type and shall have interrupting capacity of 10,000 amperes. At 500 percent current, cartridge fuses shall not blow in less than 10 seconds. Cartridge fuses shall be used for circuits rated in excess of 30 amperes, 125 volts, except where current-limiting fuses are indicated.

3.10.3 Cartridge Fuses; Current-Limiting Type

Cartridge fuses, current-limiting type, Class RK1 shall have tested interrupting capacity not less than 200,000 amperes. Fuse holders shall be the type that will reject all Class H fuses.

3.11 UNDERGROUND-SERVICE CONDUITS

Empty conduits for underground telephone cable shall be installed as indicated. Except where otherwise indicated, conduits shall terminate approximately 1.5 meter (5 feet) beyond the building wall and 600 mm (2

feet) below finished grade, with the outside ends bushed and plugged or capped.

3.12 MOTORS

Motors shall be as specified in paragraph Motors, ac, Fractional and Integral Kilowatt, (Horsepower,) whether or not motors are separately provided or included in equipment assemblies specified in other sections of these specifications. Each motor shall conform to the kW (hp) and voltage ratings indicated, and shall have a service factor and other characteristics that are essential to the proper application and performance of the motors under conditions shown or specified. Three-phase motors for use on 3-phase 480-volt systems shall have a nameplate rating of 460 volts. Unless otherwise specified, all motors shall have open frames, and continuous-duty classification based on a 40 degree C ambient temperature reference. Polyphase motors shall be squirrel-cage type, having normal-starting-torque and low-starting-current characteristics, unless other characteristics are specified in other sections of these specifications or shown on contract drawings. The Contractor shall be responsible for selecting the actual kilowatt (horsepower) ratings and other motor requirements necessary for the applications indicated. When electrically driven equipment furnished under other sections of these specifications materially differs from the design, the Contractor shall make the necessary adjustments to the wiring, disconnect devices and branch-circuit protection to accommodate the equipment actually installed.

3.13 MOTOR CONTROL

Each motor or group of motors requiring a single control and not controlled from a motor-control center shall be provided under other sections of these specifications with a suitable controller and devices that will perform the functions as specified for the respective motors. Each motor of 93 W (1/8 hp) or larger shall be provided with thermal-overload protection. Polyphase motors shall have overload protection in each ungrounded conductor. The overload-protection device shall be provided either integral with the motor or controller, or shall be mounted in a separate enclosure. Unless otherwise specified, the protective device shall be of the manually reset type. Single or double pole tumbler switches specifically designed for alternating-current operation only may be used as manual controllers for single-phase motors having a current rating not in excess of 80 percent of the switch rating. Automatic control devices such as thermostats, float or pressure switches may control the starting and stopping of motors directly, provided the devices used are designed for that purpose and have an adequate kilowatt (horsepower) rating. When the automatic-control device does not have such a rating, a magnetic starter shall be used, with the automatic-control device actuating the pilot-control circuit. When combination manual and automatic control is specified and the automatic-control device operates the motor directly, a double-throw, three-position tumbler or rotary switch shall be provided for the manual control; when the automatic-control device actuates the pilot control circuit of a magnetic starter, the latter shall be provided with a three-position selector switch marked MANUAL-OFF-AUTOMATIC. Connections to the selector switch shall be such that only the normal automatic regulatory control devices will be bypassed when the switch is in the Manual position; all safety control devices, such as low- or high-pressure cutouts, high-temperature cutouts, and motor-overload protective devices, shall be connected in the motor-control circuit in both the Manual and the Automatic positions of the selector switch. Control circuit connections to any MANUAL-OFF-AUTOMATIC switch or to more than one automatic regulatory control device shall be made in accordance with wiring diagram approved by the Contracting Officer unless such diagram is included on the drawings. All controls shall be 120 volts or less unless otherwise indicated.

3.13.1 Motor Control Centers

Control centers shall be indoor type and shall contain combination starters and other equipment as indicated. Control centers shall be NEMA ICS 2, Class 1, Type B. Each control center shall be mounted on floor sills or mounting channels. Each circuit shall have a suitable metal or laminated

plastic nameplate with white cut letters. Combination starters shall be provided with circuit breakers or fusible switches, switches equipped with high-interrupting-capacity current-limiting fuses. Motor control centers shall be provided with a full-length ground bus bar.

3.13.2 Contacts

Contacts in miscellaneous control devices such as float switches, pressure switches, and auxiliary relays shall have current and voltage ratings in accordance with NEMA ICS 2 for rating designation B300.

3.14 MOTOR-DISCONNECT MEANS

Each motor shall be provided with a disconnecting means when required by NFPA 70 even though not indicated. For single-phase motors, a single or double pole toggle switch, rated only for alternating current, will be acceptable for capacities less than 30 amperes, provided the ampere rating of the switch is at least 125 percent of the motor rating. Switches shall disconnect all ungrounded conductors.

3.15 TRANSFORMERS

Only single- and three-phase transformers having two windings per phase will be approved. Full-capacity standard NEMA taps shall be provided in the primary windings of transformers having a primary rating in excess of 600 volts. Three-phase transformers shall be connected only in a delta-wye or wye-delta configuration, as indicated except isolation transformers having a one-to-one turns ratio. "T" connections may be used for transformers rated at 15 kVA or below. The insulation on transformer windings may be the manufacturer's standard for transformers rated for operation in a 40-degree Celsius ambient temperature unless a higher-temperature insulation is shown, specified or required by the application indicated. Single kVA ratings shown are based on self-cooled operation. The basic impulse level (BIL) of individual transformers shall be as stated in the following paragraphs. The conventional dry-type transformer shown located within 1.5 meters (5 feet) of the exterior wall shall be provided in a weatherproof enclosure. Transformers to be located within the building may be provided in the manufacturer's standard, ventilated indoor enclosure designed for use in a 40-degree Celsius ambient temperature, unless otherwise specified or shown. The average sound level in decibels (dB) of transformers shall not exceed the following dB level for the applicable kVA rating range listed:

kVA RANGE	dB SOUND LEVEL
1-50	50

3.15.1 Conventional Dry-Type Transformers

Transformers having the primary or higher-voltage winding rated at 600 volts or less and a secondary or lower-voltage winding rated at 240 volts or less may be manufacturer's standard ventilated or enclosed, self-cooled type of transformer unless otherwise shown, specified or required for proper and safe application. Transformers shown with primary ratings in excess of 600 volts shall have the NEMA 220 degree C insulation and shall be rated for a temperature rise of 80 degrees C above ambient. Similarly, transformers having primary windings rated at 480 volts or less and a kVA rating of 150 or larger shall have Class H insulation and be suitable for an 80 degree C temperature rise above ambient.

3.16 LAMPS AND LIGHTING FIXTURES

Ballasted fixtures shall have ballasts which are compatible with the specific type and rating of lamps indicated and shall comply with the applicable provisions of the publications referenced.

3.16.1 Lamps

Lamps of the type, wattage, and voltage rating indicated shall be delivered to the project in the original cartons and installed in the fixtures just prior to the completion of the project.

3.16.1.1 Incandescent

Incandescent lamps shall be for 125-volt operation unless otherwise indicated.

3.16.1.2 Fluorescent

Lamps shall be of the rapid-start type unless otherwise shown or approved. Fluorescent lamps for electronic ballasts shall be as indicated.

3.16.1.3 High-Intensity-Discharge

High-intensity-discharge lamps shall be the high-pressure sodium type unless otherwise indicated, shown, or approved.

3.16.2 Fixtures

Fixtures shall be as shown and shall conform to the following specifications and shall be as detailed on Standard Drawing No. 40-06-04, Sheet Nos. 20,38,40,56, and 67, which accompany and form a part of this specification for the types indicated. Illustrations shown on these sheets are indicative of the general type desired and are not intended to restrict selection to fixtures of any particular manufacturer. Fixtures of similar designs and equivalent energy efficiency, light distribution and brightness characteristics, and of equal finish and quality will be accept able if approved. In suspended acoustical ceilings with fluorescent fixtures, the fluorescent emergency light fixtures shall be furnished with self-contained battery packs.

3.16.2.1 Accessories

Accessories such as straps, mounting plates, nipples, or brackets shall be provided for proper installation.

3.16.2.2 Suspended Fixtures

Suspended fixtures shall be provided with swivel hangers in order to ensure a plumb installation. Pendants, rods, or chains 1.2 meters (4 feet) or longer excluding fixture, shall be braced to limit swinging. Bracing shall be 3 directional, 120 degrees apart. Single unit suspended fluorescent fixtures shall have twin-stem hangers. Multiple unit or continuous-row fluorescent units shall have a tubing or stem for wiring at one point, and a tubing or rod suspension provided for each length of chassis including one at each end. Maximum distance between adjacent tubing or stems shall be 3.1 meters. (10 feet.) Rods shall be of not less than 4.8 mm (3/16 in.) diameter. Flexible raceway shall be installed to each fixture from an overhead junction box. Fixture to fixture wiring installation is allowed only when fixtures are installed end to end in a continuous run.

3.16.2.3 Ceiling Fixtures

Ceiling fixtures shall be coordinated with and suitable for installation in, on, or from the suspended ceiling provided under other sections of these specifications. Installation and support of fixtures shall be in accordance with the NFPA 70 and manufacturer's recommendations. Where seismic requirements are specified herein, fixtures shall be supported as shown or specified. Recessed fixtures shall have adjustable fittings to permit alignment with ceiling panels. Recessed fixtures installed in fire-resistive type of suspended ceiling construction shall have the same fire rating as the ceiling or shall be provided with fireproofing boxes having materials of the same fire rating as the ceiling panels, in conformance with UL-03. Surface-mounted fixtures shall be suitable for fastening to the structural support for ceiling panels.

3.16.2.4 Sockets

Sockets of industrial, strip, and other open type fluorescent fixtures shall be of the type requiring a forced movement along the longitudinal axis of the lamp for insertion and removal of the lamp.

3.16.3 Emergency Light Sets

Emergency light sets shall conform to UL 924 with the number of heads as indicated. Sets shall be permanently connected to the wiring system by conductors installed in short lengths of flexible conduit.

3.17 BATTERY CHARGERS

Battery chargers shall be installed in conformance with NFPA 70.

3.18 EQUIPMENT CONNECTIONS

All wiring not furnished and installed under other sections of the specifications for the connection of electrical equipment as indicated on the drawings shall be furnished and installed under this section of the specifications. Connections shall comply with the applicable requirements of paragraph WIRING METHODS. Flexible conduits 6 feet or less in length shall be provided to all electrical equipment subject to periodic removal, vibration, or movement and for all motors. All motors shall be provided with separate grounding conductors. Liquid-tight conduits shall be used in damp or wet locations.

3.18.1 Motors and Motor Control

Control equipment furnished under this section of the specifications, and shown on the drawings, shall be connected under this section of the specifications unless shown or specified otherwise. Except as otherwise specifically noted, automatic-control wiring, signaling, and protective devices are not included in this section of the specifications, but shall be furnished and installed under other sections of the specifications. Control wiring not shown on the drawings shall be furnished under the other sections of the specifications.

3.18.2 Installation of Government-Furnished Equipment

Wiring shall be extended to the equipment, and proper connections made thereto.

3.19 COORDINATED POWER SYSTEM PROTECTION

A fault-impedance diagram, a load flow analysis or study, a short-circuit analysis or study, and a power system coordination study shall be prepared to demonstrate that protective system after devices have been properly calibrated, adjusted, set and tested. These data, including complete descriptive and technical data of all protective devices, diagrams, and studies as required to ensure complete coordination, shall be prepared in conformance with industry practices, standards, or with other technical data approved by the Contracting Officer, and shall be submitted for approval of the Contracting Officer in accordance with submittal SD-04, Drawings.

3.19.1 Determination of Facts

The Contractor shall coordinate with the commercial power company for short circuit current availability at the site.

3.19.2 Fault-Impedance Diagram

The diagram shall be prepared to reflect the system impedance of power sources available to supply the building or facility, and the impedance of the new power system components for the facility.

3.19.3 Power System Coordination Study

The study shall include all data related to existing and new protective devices proposed as such data relates to the nameplate data, time-current characteristics, and the fixed or adjustable features of the existing or new protective devices. These data shall include:

a. The time-current characteristic curves published by the manufacturer of the protective devices or equipment having adjustable time-current characteristics.

b. Data published by the manufacturer of circuit breakers or protective relays which contain installation, operation and maintenance instructions for calibration, adjustment, setting, and testing of the specific protective device.

c. Composite time-current characteristic curves for primary, secondary and other related devices, as required to ensure coordinated power system protection between existing and new protective devices or equipment.

3.19.4 Circuit Protective Devices

The Contractor shall calibrate, adjust, set and test each new adjustable circuit protective device to ensure that they will function properly prior to the initial energization of the new power system under actual operating conditions.

3.20 TELEPHONE WIRING SYSTEM

The telephone wiring system shall be complete and functional.

3.20.1 Telephone Cables

Each telephone outlet will be serviced with 24-gauge solid copper station-type color coded cable, vinyl insulated with an overall vinyl jacket. Cable shall be continuous from each telephone outlet to backboard indicated on the drawings. Splicing of individual cables shall not be permitted. At each outlet, four-pair cable shall be terminated on the modular jack assembly, using color code provided by the Contracting Officer. 25-pair cable shall terminate with a 25-pair female half connector including body, strain relief, and cover. At the backboard, terminate the cable on cross-connect terminal blocks and mark with the appropriate outlet number.

3.20.2 Telephone Outlets

Modular telephone outlets shall comply with FCC Rules and Regulations, Part 68, Subpart F. Each modular outlet shall have three modular jacks. Each eight-position jack in the modular outlet shall contain screw terminals or approved quick connect terminals for each conductor in the cable. The flush mounted cover shall be ivory. Each outlet shall be numbered for easy identification of type and location. The telephone outlet shall consist of multiple gang outlet box, device cover, satin finished steel or brushed aluminum cover plate with beveled edges and rubber grommet.

3.20.3 Crossconnect Blocks

Punch down 66 type connecting blocks shall be provided to terminate all subscriber lines. The blocks shall be attached to right side of the plywood telephone backboard in vertical rows.

3.20.4 Telephone Backboards

Telephone backboards shall be installed at locations shown on the drawings.

The backboards shall be 18 mm (3/4 inch) plywood having a two-coat insulating varnish finish and shall be sized as shown on the drawings.

3.20.5 Building Entry Protection Modules

Building Entry Protection Modules shall be provided to terminate the building feeder cable. The modules shall be attached to the left side of the telephone backboard.

3.20.6 Auxiliary Devices

All auxiliary devices such as tie bars, cable rings, etc. which are not shown but are required for a high grade installation shall be provided.

3.20.7 Qualifications of Installer

The system shall be installed by an experienced installer regularly engaged in the installation of telephone systems. The Contracting Officer may reject any proposed installer who can not show evidence of such qualifications.

3.21 PAINTING AND FINISHING

Field-applied paint on exposed surfaces shall be provided under Section 09900 PAINTING, GENERAL.

3.22 REPAIR OF EXISTING WORK

The work shall be carefully laid out in advance, and where cutting, channeling, chasing, or drilling of floors, walls, partitions, ceiling, or other surfaces is necessary for the proper installation, support, or anchorage of the conduit, raceways, or other electrical work, this work shall be carefully done, and any damage to building, piping, or equipment shall be repaired by skilled mechanics of the trades involved, at no additional cost to the Government.

3.23 TESTS

After the interior-wiring-system installation is completed, and at such time as the Contracting Officer may direct, the Contractor shall conduct an operating test for approval. The equipment shall be demonstrated to operate in accordance with the requirements of this specification. Continuity test shall be conducted on the telephone wiring system. The test shall be performed in the presence of the Contracting Officer. The Contractor shall furnish all instruments and personnel required for the tests, and the Government will furnish the necessary electric power. No part of the electrical distribution system shall be energized prior to the resistance testing of that system's ground rods and submission of test results to the Contracting Officer. Test reports shall indicate the location of the rod and the resistance and the soil conditions at the time the test was performed.

3.24 ONE-LINE DIAGRAM

A one-line diagram with main transformer, building disconnect means, and feeder breakers/switches to building panels located at the building disconnect shall be provided. Diagram shall be mounted under glass or shall be plastic laminated. The breaker/switch identification on the diagram shall match nameplate on the installed equipment.

-- o O o --

TYPE 605
Exit Light, Stencil Face

First Suffix	Second Suffix	Third Suffix	Description
A			Single Face
B			Double Face
	1		Incandescent
	2		Fluorescent
		A	End Mounted
		B	Top Mounted
		C	Back Mounted
		D	Stem Mounted

Incandescent fixtures shall conform to UL 924, UL 1571, and NFPA 101. Fluorescent fixture shall conform to UL 924, UL 1570, and NFPA 101. Unit shall conform to UL 924, and shall meet or exceed the NFPA 70 time and voltage requirements. The unit shall be rated to operate on the lighting circuit voltage. Following sustained loss of the normal power supply, the unit shall be capable of automatically and instantaneously illuminating the two 6-Volt lighting fixtures for a period of not less than 90 minutes at a battery voltage in excess of 87.5 percent of the nominal voltage rating. The rating shall be the nickel-cadmium, pocket plate type designed to be maintenance free during the expected battery life, and shall be field replaceable without requiring removal of other components. The battery charger shall be the solid-state type and shall provide a continuous, variable, current limited, filtered and regulated charge rate. The battery and charger shall be contained in a steel cabinet not less than 18 gauge thickness with an enamel finish, unless otherwise approved, which shall be equipped with a push-to-test switch and a meter to indicate battery voltage when the switch is closed. Mounting brackets or shelf shall be provided, complete with all mounting hardware, all with a finish to match the finish or color of the cabinet. Fixture shall be prewired, with wiring concealed in the illuminated portion of the fixture housing.

Fixture type indicated on this sheet shall also conform to requirements specified and indicated in the contract documents.

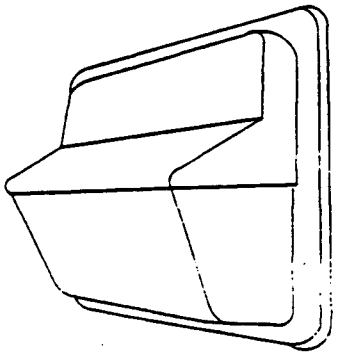

TYPE 501

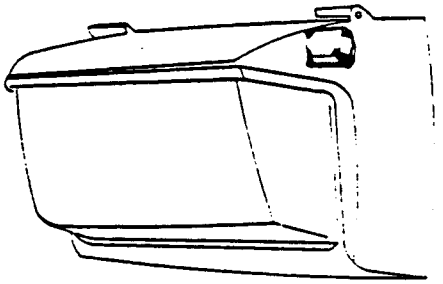

TYPE 502

High Intensity Discharge Fixture for Exterior Wall Mounting, Medium Output

Suffix	Description
	Rated for:
A	50 watt high pressure sodium lamp
B	70 watt high pressure sodium lamp
C	100 watt high pressure sodium lamp
D	150 watt high pressure sodium lamp
E	175 watt metal halide lamp

Fixture shall conform to UL 1572 and shall be rated for use in wet locations. The fixture housing, door assembly, and backplate shall be die-cast aluminum. The door assembly shall have integral cast aluminum hinges. The door assembly shall be held securely to the fixture housing with a stainless steel safety strap when the door is in the open position. The door assembly shall be held firmly against a sealing gasket between the fixture door and housing by stainless steel latches or with stainless steel or brass captive screws when the fixture door is closed. The refractor shall be prismatic borosilicate glass or polycarbonate resin. The refractor shall be gasketed and securely held in the door frame, but shall be easily removed for replacement with a common tool. The reflector shall be aluminum with the manufacturer's standard commercial product finish suitable for the type and rating of the lamp. The fixture shall have manufacturers standard protective coating. Cast knockouts shall be provided in the backplate for recessed outlet box mounting. Ballast shall be of the high power factor type. Ballast shall be of the lead-peak autotransformer type metal halide for lamps and the regulating type for high pressure sodium lamps. Ballast shall be capable of starting and operating the lamp at ambient temperatures from minus 20 degrees F to 105 degrees F. The fixture shall be prewired, and shall have a field adjustable, mogul base glazed porcelain lampholder.

Fixture types indicated on this sheet shall also conform to requirements specified and indicated in the contract documents.

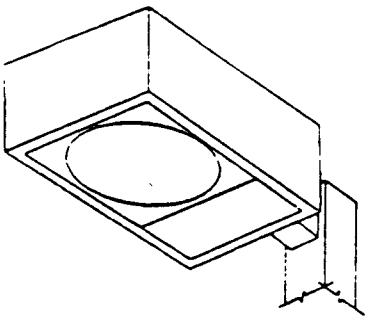

TYPE 401

Enclosed, Integrally Ballasted, Rectangular Shaped,
Side Mounted, High Intensity Discharge Lighting Fixture

First Suffix	Second Suffix	Description
A		Rated for mercury vapor lamp
B		Rated for metal halide lamp
C		Rated for high pressure sodium lamp
	1	IES type II medium light distribution
	2	IES type III medium light distribution
	3	IES type V medium light distribution.

Fixture shall conform to UL 1572. Fixture housing shall have sides and doorframe of one-piece extruded aluminum with welded joints and top of crowned sheet aluminum. The top shall be spot welded and sealed watertight. The housing shall be rigidly attached to a square shaped mounting arm of extruded aluminum. The fixture door shall have a flat heat and impact resistant lens of 3/16-inch nominal, tempered glass, and shall be hinged and held in place with captive screws of the same finish as the door. The lens and door shall enclose the lamp compartment. The reflector shall be aluminum of the manufacturer's standard commercial product finish suitable for the lamp type and rating. The ballast shall be of the high power factor type. The ballast and power components shall be mounted on a single bracket and shall be removable. The fixture, including the mounting arm, shall be gasketed to allow air movement but prevent the entry of dust and insects. Ballast shall be of the constant wattage autotransformer type for mercury vapor lamps, lead-peak autotransformer type for metal halide lamps, and regulating type for high pressure sodium lamps. Ballast shall be capable of starting and operating the lamp at ambient temperatures ranging from minus 20 degrees F to 105 degrees F. A square extruded aluminum pole including anchor type base, anchor bolts and mounting hardware shall be provided by the fixture manufacturer and shall be the manufacturer's standard commercial product for the number of fixtures and wind load indicated or specified. The fixture housing mounting arm shall have a dark duranodic bronze finish. The fixture shall be prewired and shall have a mogul base glazed porcelain lampholder.

Fixture type indicated on this sheet shall also conform to requirements specified and indicated in the contract documents.

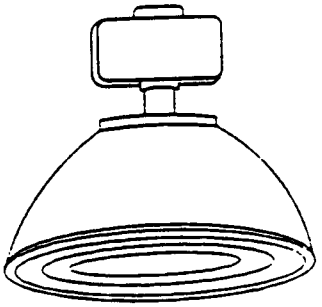

TYPE 301
High Bay

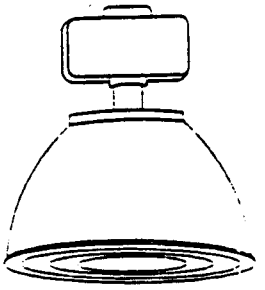

TYPE 302
Low Bay

Enclosed, Pendant, Integrally Ballasted, Industrial,
High Intensity Discharge Fixture

First Suffix	Second Suffix	Description
A		Rated for metal halide lamp
B		Rated for high pressure sodium lamp
	1	Type 300 emergency quartz standby

Fixture shall conform to UL 1572. The ballast housing and structural parts, including the mounting devices, shall be of cast aluminum. The optical assembly shall be enclosed, gasketed, and locked to the ballast housing by a positive vibration-proof means. An optical assembly filter to permit the passage of air during heating and cooling cycles shall be provided. All exposed cast aluminum parts shall have a baked enamel paint finish. The lens shall be heat and impact resistant glass mounted in a gasketed, hinged aluminum door frame. Ballast shall be of the high power factor type. Fixture shall be prewired. Ballast shall start and operate the lamp in an ambient temperature range of minus 20 degrees F to 105 degrees F. Metal halide fixture shall use a lead-peaked autotransformer ballast. High pressure sodium fixture shall use a regulated type ballast. Reflector shall be constructed of aluminum and contoured or formed to provide high lighting efficiency. The exterior of the reflector shall have a clear acrylic lacquer protective coating. The interior of the reflector shall be the manufacturer's standard commercial product finish suitable for light source provided. The fixture shall have a mogul base glazed porcelain lampholder, adjustable for varying the spacing-to-mounting-height ratio in the field. The fixture shall have separate, removable mounting components that can be easily removed and assembled to the structural or mounting hardware before mounting the remainder of the fixture.

Fixture types indicated on this sheet shall also conform to requirements specified and indicated in the contract documents.

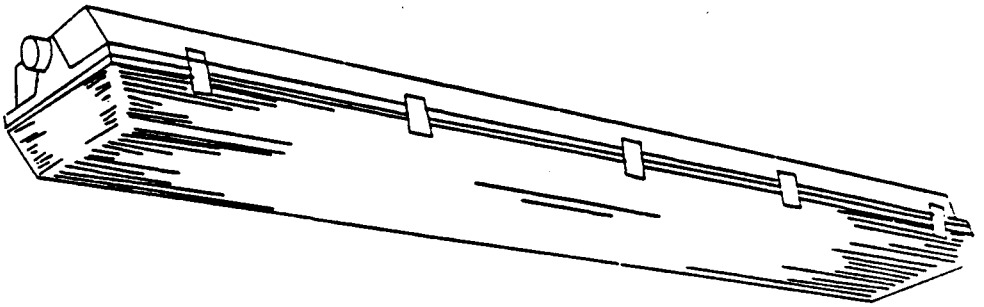

TYPE 232
4-Foot Fixture Length

TYPE 233
8-Foot Fixture Length

Enclosed and Gasketed, Vapor-Tight Fluorescent Fixture
For Surface or Pendant Mounting

Fixture shall conform to UL 1570 and shall be vapor-tight and suitable for use in wet locations. Fixture shall have one-piece housing of molded high-impact plastic or reinforced fiberglass. Housing body shall have an internal, die-formed, cold-rolled steel channel with cover to provide fixture rigidity and to contain electric components. The metal channel and cover shall receive a rust inhibitive coating before application of the finish coat, which shall consist of baked white enamel or porcelain enamel. The lens shall be one piece, of high-impact-resistant acrylic, and shall have smooth exterior surface and stippled or pebbled interior surface. The lens shall be secured to the housing with captive molded plastic or stainless steel spring latches. A continuous gasket shall be provided to form a vapor seal between the lens and the fixture body. All openings in the housing for mounting, conduit, etc., shall be capable of forming a vapor-tight seal. Ballast(s) shall be cold weather type for starting temperatures down to minus 20 degrees F. Standard ballast(s) shall be the Class P, high power factor type approved for the application by the Certified Ballast Manufacturers. Fixture shall be prewired, and provided with lamps that are properly mated to the ballast operating characteristics.

Fixture types indicated on this sheet shall also conform to requirements specified and indicated in the contract documents.

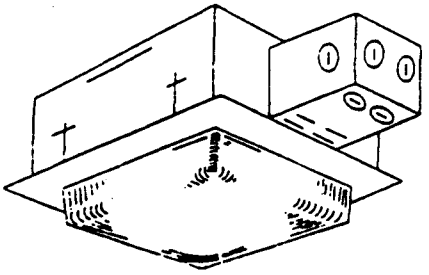

TYPE 126
Square

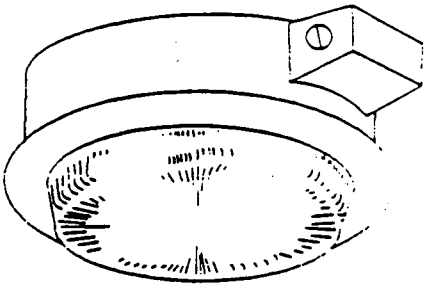

TYPE 127
Round

Weathertight, Insect-proof, Recessed Incandescent Fixture

First Suffix	Second Suffix	Description
A		Drop white opal glass lens
B		Flat prismatic glass lens
	1	Suspended plaster installation
	2	Concrete pour installation

Fixture shall conform to UL 1571 for use in wet locations and shall be enclosed and gasketed. Fixture shall be suitable for installation in outdoor soffitts. The housing shall be 18 gage hot-dipped galvanized steel and shall have sealed seam construction. The housing for suspended plaster installation shall be provided with hot-dipped galvanized steel sheet metal splice compartment and plaster frame. The housing for concrete pour installation shall be provided with a cast aluminum splice compartment. The interior surfaces of the housing shall be finished with baked white enamel. The reflector shall be one piece specular aluminum. The lampholder shall be medium base glazed porcelain. The lens frame shall be one piece cast aluminum with a 1/8-inch minimum wall thickness. The lens frame shall have a brushed satin aluminum finish and be provided with a clear acrylic lacquer protective coating. The lens frame shall be held securely to the fixture housing with a hinge and self-centering captive screws or with a chain-hinge and four self-centering captive screws. A round neoprene factory installed gasket shall be provided between the lens frame and the ceiling. A flat gasket shall be provided between the lens frame and the glass diffuser. The glass lens shall have a minimum thickness of 1/4 inch. The lens shall be held securely to the lens frame and gasket with steel clips and screws. Fixture shall be prewired. Fixture shall be rated for a 150 watt lamp.

Fixture types indicated on this sheet shall also conform to requirements specified and indicated in the contract documents.

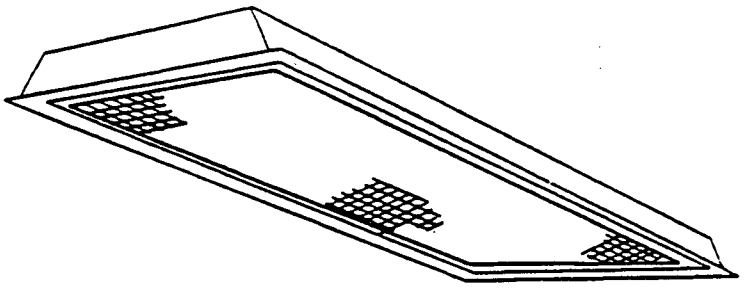

TYPE 206
Static Troffer

TYPE 207
Air Handling Troffer

Recessed Fluorescent Fixture, 2-foot by 4-foot

First Suffix	Second Suffix	Third Suffix	Description
A			Two lamps
B			Three lamps
C			Four lamps
	1		Prismatic acrylic lens
	2		1/2- by 1/2- by 1/2-inch cube louver
	3		1/2- by 1/2- by 1/2-inch polystyrene cube louver
		A	Type 200 emergency unit

Fixture shall conform to UL 1570. Housing shall be complete with integral side trim flanges and shall be suitable for mounting in continuous rows. Housing and trim flanges shall be cold-rolled steel. The lens or louver shall be installed in a manner that will prevent it from coming loose due to vibration. The ballasts and wiring shall be enclosed in a wireway that is continuous throughout the length of the fixture and which forms a wireway for circuits through the fixture. All metal parts shall receive a rust inhibitive coating before application of the finish coat. The finish coat shall be baked enamel. Lenses and acrylic cube louvers shall be 100 percent virgin acrylic plastic. The lens or louver shall be four feet in length. Acrylic lens shall be flat, 0.125 inch nominal thickness, low brightness, with smooth top surface and a lower surface having a regular array of prismatic elements. Two-lamp ballasts shall be used for individually mounted two-lamp fixtures. Standard ballast(s) shall be the Class P, high power factor type which has been approved for the application by the Certified Ballast Manufacturers. Fixture shall be prewired.

Fixture types indicated on this sheet shall also conform to requirements specified and indicated in the contract documents.

SECTION 16421 - LOW VOLTAGE SURGE ARRESTERS

PART 1 - GENERAL

1.1 GENERAL REQUIREMENTS

1.1.1 Standard Product

Material and equipment shall be a standard product of a manufacturer regularly engaged in the manufacture of the product and shall essentially duplicate items that have been in satisfactory use for at least 2 years prior to bid opening. The experience use shall include applications of equipment and materials under similar circumstances and of the same design and rating as the equipment specified. Equipment items shall be capable of being serviced by an organization that is, in the opinion of the Contracting Officer, reasonably convenient to the site.

PART 2 - PRODUCTS

2.1 600V, 3 PHASE ARRESTERS

Silicon Oxide Varistor type with no spark gap, no current limiting resistor. Conductivity equal for positive or negative potential.

2.1.1 Ratings:

a. Sparkover voltage: 1000V.

b. Peak current: 60,000A.

c. Dissipate 1500 Joule.

d. With 8 by 20 microsecond wave, voltage crest at stated current shall not exceed 800V at 1500A, 1000V at 5000A, 1300V at 10000A, 5000V at 25000A.

e. 4 wire.

2.2 300V, 3 PHASE ARRESTERS

Silicon Oxide Varistor type with no spark gap, no current limiting resistor. Conductivity equal for positive or negative potential.

2.2.1 Ratings:

a. Sparkover voltage: 800 volts.

b. Peak current: 60,000A.

c. Dissipate 750 Joule.

d. With 8 by 20 microsecond wave, voltage crest at stated current shall not exceed 400V at 15000A, 800V at 5000A, 1300V at 10000A, 5000V at 25000A.

e. 4 wire.

2.3 300V SINGLE PHASE ARRESTERS

Silicon Oxide Varistor type with no spark gap, no current limiting resistor. Conductivity equal for positive or negative potential.

2.3.1 Ratings:

a. Sparkover voltage: 800V.

b. Peak current: 60,000A.

c. Dissipate 750 Joule.

d. With 8 by 20 microsecond wave, voltage crest at stated current shall not exceed 400V at 15000A, 800V at 5000A, 1300V at 10000A, 5000V at 25000A.

e. 3 wire.

PART 3 - EXECUTION

(NOT USED)

- - o O o - -

SECTION 16422 - TRANSIENT SUPPRESSORS

PART 1 - GENERAL

1.1 REFERENCES

The publications listed below form a part of this specification to the extent referenced. The publications are referred to in the text by basic designation only.

INSTITUTE OF ELECTRICAL AND ELECTRONICS ENGINEERS (IEEE)

IEEE 587 (1980) Guide for Surge Voltages in Low-Voltage AC Power Circuits.

IEEE C62.41 (1990) Category A and B Suppression Response.

UNDERWRITERS LABORATORIES (UL)

UL 1449 (1990) Transient Voltage Surge Suppressors.

1.2 SUBMITTALS

The following shall be submitted in accordance with Section 01300 - SUBMITTALS:

SD-01, Data

Manufacturer's literature, including rating information.

Submit only for those types called for in the Schedule, on the Drawings, or in other Sections.

SD-19, Operation and Maintenance Manual

Operation and Maintenance Manual

List of suppressors used on this project with manufacturer's name, part (catalog) number, and (for each part so provided) serial number. The use of a generic or typical part number will not be acceptable. Provide the part number which was used to order the part with all choices and options included. If a part number is given on a nameplate on the actual part, then that number shall be included on this list. If the ordering number and the nameplate number differ, include both numbers and explain the difference.

Manufacturer's literature for each unit.

1.3 EXTRA MATERIALS

Provide as scheduled.

PART 2 - PRODUCTS

2.1 TRANSIENT VOLTAGE SURGE SUPPRESSORS: DISTRIBUTION PANEL MOUNT

High performance, staged, hybrid suppression circuitry with built-in redundancy shall provide continuous protection even after module damage. System shall meet IEEE C62.41, and comply with UL 1449.

Protection modules shall be plug-in replaceable. Diagnostic module shall monitor system and sound a local alarm upon trouble.

Enclosure: lockable, hinged door, NEMA 12.

Meet the following rating requirements. Test waveforms shall comply with IEEE 587. 50, 60, or 400 Hertz. Suitable for use on 3000A and smaller panels. Fused at 30A in each phase. Provide Normal Mode (L-N) and Common Mode (L+N-G) protection.

Voltage Single 10X1000 microsecond Pulse-Rating:
Rated Joules:

120/208V wye	700
240V delta	1600
277/480V wye	2200
480V delta	3500

Maximum single pulse Transient Current (8X20 microsecond): 50,000A peak.

Voltage Minimum Noise Rejection (dB) @ 50-150 Rating:
Ohms from 5KHz to 5MHz:

120/208V wye	-20
240V delta	N/A
277/480V wye	-20
480V delta	N/A

Voltage Maximum Clamp Voltage at 0.3KA,
Rating: 8X20 microsecond wave:

120/208V wye	320
240V delta	640
277/480V wye	1000
480V delta	1500

Voltage Clamp Voltage (Vpeak)
Rating: Category B ANSI C62.51

120/208V wye	450
240V delta	800
277/480V wye	1350
480V delta	1750

Operating Temperature Range: -40 to +85 degrees Centigrade.

Provide remote alarm module where scheduled. Leviton TVSS 57000 Series, or Engineer approved equivalent.

2.2 TRANSIENT VOLTAGE SURGE SUPPRESSORS: BRANCH PANEL MOUNT (400A)

High performance, staged, hybrid suppression circuitry with diagnostic LED in each removable module to indicate that the module is active and functioning properly. System shall meet IEEE C62.41 and comply with UL 1449. Protection modules shall be plug-in replaceable. System shall perform Sine Wave Tracking. Enclosure shall be hinged door, NEMA 12.

Meet the following rating requirements. Test waveforms shall comply with IEEE 587. 50, 60, or 400 Hertz. Suitable for use on 400A and smaller panels.

Protected by branch circuit breaker in panelboard.

Provide Normal Mode (L-N) and Common Mode (L+N-G) protection.

Voltage Single 10X1000 microsecond Pulse- Rating:
Rated Joules:

120/208V wye	350
240V delta	800
277/480V wye	1100
480V delta	1750

Maximum single pulse Transient Current (8X20 microsecond): 25,000A peak.

Voltage Minimum Noise Rejection (dB) @ 50-150 Rating:
Ohms from 5KHz to 5MHz:

120/208V wye	-20
240V delta	N/A
277/480V wye	-20
480V delta	N/A

Voltage Maximum Clamp Voltage at 0.3KA,

Rating: 8X20 microsecond wave:
120/208V wye 320
240V delta 640
277/480V wye 1000
480V delta 1500

Voltage Clamp Voltage (Vpeak)
Rating: Category B ANSI C62.51
120/208V wye 450
240V delta 800
277/480V wye 1350
480V delta 1750

Operating Temperature Range: -40 to +85 degrees Centigrade.

2.2.1 Provide remote alarm module where scheduled.

2.2.2 Leviton TVSS 52000 Series, or equal.

2.3 TRANSIENT VOLTAGE SURGE SUPPRESSORS: BRANCH PANEL MOUNT (225A)

Similar to 2.02. Leviton TVSS 51000 Series, or equivalent.

2.4 TRANSIENT VOLTAGE SURGE SUPPRESSORS: BRANCH CIRCUIT

Similar to 2.02. Leviton TVSS 51020/51010-WM, or equivalent.

2.5 TRANSIENT VOLTAGE SURGE SUPPRESSOR POWER STRIPS

Power strip with 6-foot 14-3 line cord, circuit breaker, separate switch at opposite end from line cords, fuses, suppressor, and six U-ground outlets. 15A, 120V 60 Hertz with Sine Wave Tracking feature. Strip shall meet IEEE C62.41 and comply with UL 1449.

2.5.1 Meet the following rating requirements. Test waveforms shall comply with IEEE 587. Provide Normal Mode (L-N) and Common Mode (L+N-G) protection, plus filtering.

Voltage Single 10X1000 microsecond Pulse- Rating:
Rated Joules:
120V 250

Maximum single pulse Transient Current (8X20 microsecond): 21,000A peak.

Voltage Minimum Noise Rejection (dB) @ 50-150
Rating: Ohms from 5KHz to 5MHz:
120V -30 Normal Mode
120V -10 Common Mode

Voltage Maximum Clamp Voltage at 3KA,
Rating: 8X20 microsecond wave (UL 1449):
120V 400 Normal & Common Mode

Voltage Clamp Voltage (Vpeak)
Rating: ANSI C62.41 Category A Ringwave
120V 300 Normal Mode
120V 360 Common Mode

Voltage Clamp Voltage (Vpeak)
Rating: ANSI C62.41 Category B Ringwave
120V 370 Normal Mode
120V 380 Common Mode

Operating Temperature Range: -40 to +85 degrees Centigrade.

Diagnostic and power on LED's. Leviton TVSS 5200PS Series, or equivalent.

2.6 DATA AND TELECOMMUNICATIONS TRANSIENT SUPPRESSOR

2.6.1 Protection:

Tip to ring, tip to ground, and ring to ground.

2.6.2 Telephone unit error factor from 0 to 256 K bytes:

None

2.6.3 Balances

As required by IEEE 455-1.

2.6.4 Voltage protection level:

Coordinate with signalling equipment.

2.6.5 Comply with 2.02 B. through I.

2.6.6 Number of Pairs:

See Drawings

2.6.7 Advanced Protection Technologies TE3100, 3006, 4100, 5100, 5412, 5512, or 7000 series (depending on physical configuration), or equivalent.

2.7 LOW VOLTAGE 4 WIRE TRANSIENT SUPPRESSOR

Designed for use on 4-20mA current loop metallic lines having 24V DC nominal (28V DC maximum) open circuit voltage and no switching. Eight captive screw terminals plus grounding terminations. Two 3 element gas tube arresters, four 15 ohm (nominal: resistance value shall be coordinated with gas tube and diode ratings by suppressor manufacturer) resistors, and four 30V silicon avalanche diodes. Edco, Inc. (1-904-732-3029) Series PC642C030, or equivalent.

2.8 LOW VOLTAGE MULTI-LINE SUPPRESSOR

Designed for use on 4-20mA current loop metallic lines having 24V DC nominal (28V DC maximum) open circuit voltage and no switching. 50 pin punch-down type, designed for connection of signal plus, signal common (tip to ring, tip & ring to ground) and shield for 16 pairs. Comply with 2.01 B. through I. Advanced Protection Technologies, similar to model TE/3025 BLOCK, or equivalent.

2.9 COMMUNICATIONS LINE TRANSIENT SUPPRESSOR

Designed for use on dual communication lines connected to plus or minus 12V (typical) DC drivers (such as for lines connecting a PLC to its remote I/O racks, not for telephone lines). Eight captive screw terminals plus grounding termination. Three-element gas tube arrester, 10 ohm (typical) resistor (2), and 20V (typical) silicon avalanche diodes (2) for each pair. Coordinate resistor and voltage ratings with requirements of drivers actually supplied. Edco, Inc., PRS-232-4 (for ratings shown above), or equivalent.

PART 3 - EXECUTION

3.1 SCHEDULE

3.1.1 Suppressors Required:

2.1, 2.3, 2.5, 2.6, 2.7.

- - o O o - -

SECTION 16610

UNINTERRUPTIBLE POWER SUPPLY (UPS) SYSTEM

PART 1 GENERAL

1.1 REFERENCES

The publications listed below form a part of this specification to the extent referenced. The publications are referred to in the text by basic designation only.

INTERNATIONAL CONFERENCE OF BUILDING OFFICIALS (ICBO)

ICBO-01	(1994) Uniform Building Code

NATIONAL ELECTRICAL MANUFACTURERS ASSOCIATION

NEMA PE 1	(1993) Uninterruptible Power Systems

NATIONAL FIRE PROTECTION ASSOCIATION (NFPA)

NFPA 70	(1993) National Electrical Code

1.2 SYSTEM DESCRIPTION

The UPS system shall consist of UPS module, battery system, battery protective device, static bypass transfer switch, controls and monitoring. Input ac power shall be connected to the normal source ac input of the UPS module. The battery shall be connected to the dc input of the UPS module through the battery protective device. The ac output of the UPS system shall be connected to the critical loads.

1.2.1 UPS Module and Battery System

UPS module shall contain required input isolation transformer, rectifier/charger unit, inverter unit and controls, battery protective device, and any other specified equipment/devices. Battery system shall contain the battery cells, racks, battery disconnect, battery monitor and cabinet, if required.

1.2.2 Cabinet, Static Bypass Transfer Switch, Control and Monitoring

The UPS system shall include the system cabinet, static bypass transfer switch, system protective devices, monitoring and controls, means of isolating the system from the critical load, and remote monitoring interfaces.

1.2.3 Design Requirements

1.2.3.1 Parts and Materials

Parts and materials comprising the UPS system shall be new, of current manufacture, of a high grade and free of defects and imperfections, and shall not have been in prior service except as required during aging and factory testing.

1.2.3.2 Components

Active electronic devices shall be solid state. Semiconductor devices shall be sealed. Relays shall be dust-tight.

1.2.3.3 Semiconductor Fusing

Power semiconductors shall be fused to prevent cascaded or sequential semiconductor failures. Indicator lamp denoting blown fuse conditions shall be readily observable by the operator without removing panels or opening cabinet doors.

1.2.3.4 Interchangeability

The subassemblies in one UPS module shall be interchangeable with the corresponding modules within the same UPS.

1.2.3.5 EMI/RFI Protection

The components and the system shall be designed to minimize the emission of electromagnetic waves that may cause interference with other equipment.

1.2.3.6 Wiring

Wiring practices, materials, and coding shall be in accordance with the requirements of NFPA 70 and other applicable standards.

1.2.3.7 Terminations

Terminals shall be supplied for making power connections.

1.2.3.8 Internal Assembly

The subassemblies shall be mounted in pull-out and/or swing-out trays where feasible. Cable connections to the trays shall be sufficiently long to allow easy access to all components. Where not feasible to mount subassemblies in pull-out or swing-out trays, they shall be firmly mounted inside the enclosure. Test points or logic indicators shall be labeled and located on the front edge of the control logic cards, if used.

1.2.3.9 Cabinet Structure

UPS system shall be installed in cabinet of heavy-duty structure meeting the NEMA PE 1 standards for floor mounting. UPS module cabinet shall have hinged and lockable doors on the front only, with assemblies and components accessible from the front. Doors shall be key lockable. Operating controls shall be located outside the locked doors.

1.2.3.10 Cabinet Finish

Equipment cabinet shall be cleaned, primed and painted in the manufacturer's standard colors, in accordance with accepted industry standards.

1.2.3.11 Safety

UPS shall be equipped with instruction plates including warnings and cautions, suitably located, describing any special or important procedures to be followed in operating and servicing the equipment.

1.2.4 Performance Requirements

1.2.4.1 Normal Operation

The UPS module rectifier/charger shall convert the incoming ac input power to dc power for the inverter and for float charging the battery. The inverter shall supply ac power continuously. Inverter output shall be synchronized with the bypass ac power source, provided that the bypass ac power source is within the specified frequency range. The UPS system shall supply ac power to the critical loads.

1.2.4.2 Loss of ac Input Power

The battery shall supply dc power to the inverter so that there is no interruption of ac power to the critical load whenever the ac input power source deviates from the specified tolerances or fails completely. The battery shall continue to supply power to the inverter for the specified protection time. At the same time, an alarm shall sound to alert operating personnel, allowing startup of a secondary power source or orderly shutdown of the critical load.

1.2.4.3 Return of ac Input Power Source

The rectifier/charger shall start and assume the dc load from the battery when the ac input power source returns. The rectifier/charger shall then simultaneously supply the inverter with dc power and recharge the battery. This shall be an automatic function and shall cause no disturbance to the critical load.

1.2.4.4 Failure of ac Input Power to Return

Should the ac input power fail to return before the battery voltage reaches the discharge limit, the UPS system shall disconnect from the critical load to safeguard the battery.

1.2.4.5 Retransfer to Inverter

The static bypass switch shall be capable of automatically retransferring the load back to the inverter output after the inverter output has returned to normal conditions. Retransfer shall not occur if the two sources are not synchronized.

1.2.4.6 UPS System Maintenance

Manual closure of the maintenance bypass switch shall transfer the critical load from the inverter output to the bypass ac power source without disturbing the critical load bus. UPS module shall be capable of manual return to normal operation after completion of maintenance.

1.2.4.7 Battery Maintenance

The battery protective device shall provide the means of disconnecting the battery from the rectifier/charger and inverter for maintenance. The UPS module shall continue to function and meet the performance criteria specified except for the battery function.

1.3 SUBMITTALS

The following shall be submitted in accordance with Section 01300 SUBMITTAL PROCEDURES:

SD-01 Data

UPS System Performance Data Sheets.

Pertinent performance data for the UPS system, using a copy of the data sheets supplied with this specification. Data sheets shall be certified by a responsible officer of the UPS manufacturer.

SD-04 Drawings

UPS System.

Detail drawings consisting of a complete list of equipment and materials, manufacturer's descriptive and technical literature, battery sizing calculations per IEEE Std 485, installation instructions, single-line diagrams, ladder-type schematic diagrams, elevations, layout drawings, and details required to demonstrate that the system has been coordinated and will function properly as a unit.

SD-19 Operation and Maintenance Manuals

UPS System.

Six complete copies of operation manuals outlining the step-by-step procedures required for system startup, operation and shutdown. The instructions shall include the manufacturer's name, equipment model number, service manual, parts list, and brief description of equipment and its basic operational features. Six complete copies of maintenance manuals listing routine maintenance procedures, possible breakdowns and repairs,

and troubleshooting guides. Corrective maintenance procedures shall identify the most probable failures and the appropriate repairs. Test measurement levels shall be referenced to specific test points on the installed equipment. Operation and maintenance manuals may be either combined or separate.

Lesson Plans and Training Manuals.

Lesson plans and training manuals for the training phases, including type of training to be provided and proposed dates, with a list of reference materials.

1.4 DELIVERY AND STORAGE

Equipment placed in storage shall be protected from humidity and temperature variations, dirt, dust, or other contaminants.

1.5 PROJECT/SITE CONDITIONS

1.5.1 Environmental Conditions

The UPS and battery system shall be capable of withstanding any combination of the following external environmental conditions without mechanical or electrical damage or degradation of operating characteristics.

a. Operating altitude: Sea level to 1,200 meters (4,000 ft.)

b. Operating ambient temperature range: 0 to 40 degrees C. (32 to 104 degrees F.)

c. Non-operating and storage ambient temperature range: Minus 20 to plus 60 degrees C. (Minus 4 to plus 140 degrees F.)

d. Operating relative humidity: 0 to 95 percent, without condensation.

1.5.2 Verification of Dimensions

The Contractor shall become familiar with details of the work, verify dimensions in the field, and shall advise the Contracting Officer of any discrepancy before performing the work.

1.6 NAME PLATES

Each major item of equipment shall have the manufacturer's name, address, type or style, model or serial number, and catalog number on a plate secured to the item of equipment.

1.7 SPECIAL TOOLS

One set of special tools, calibration devices, and instruments required for operation, calibration, and maintenance of the equipment shall be provided.

PART 2 PRODUCTS

2.1 STANDARD PRODUCTS

Materials and equipment shall be the standard products of a manufacturer regularly engaged in the manufacture of such products and shall essentially duplicate items that have been in satisfactory use for at least 2 years prior to bid opening. Equipment shall be supported by a service organization that is, in the opinion of the Contracting Officer, reasonably convenient to the site.

2.2 LOAD PROFILE

The UPS system shall be compatible with the load characteristics defined in the LOAD PROFILE TABLE below and load configuration shown.

LOAD PROFILE TABLE

Type of load: Personal computer.

Size of load: 1,000 VA.

2.3 UPS SYSTEM RATINGS

Unless stated otherwise, the parameters listed are under full output load at 0.9 power factor, with batteries fully charged and floating on the dc bus and with nominal input voltage.

2.3.1 System Capacity

Overall 1,000 kVA, non redundant, at 40 degrees C.

2.3.2 Module Capacity

1,000 kVA.

2.3.3 Battery Capacity

Discharge time to end voltage: 15 minutes, at 25 degrees C. (77 degrees F.) Battery shall be capable of delivering 125 percent of full rated UPS load at initial start-up.

2.3.4 ac Input

a. Voltage 120 volts line-to-ground.

b. Number of phases: Single-phase, plus ground.

c. Voltage Range: Plus 10 percent, minus 15 percent, without affecting battery float voltage or output voltage.

d. Frequency: 60 Hz, plus or minus 5 percent.

e. Power walk-in: 20 percent to 100 percent over 15 to 24 seconds.

f. Total harmonic current distortion (THD) reflected into the primary line: 5 percent maximum.

g. Transformer sub-cycle inrush: 4 to 8 times full load rating.

2.3.5 ac Output

a. Voltage 120 volts line-to-neutral.

b. Number of phases: Single-phase, plus ground.

c. Voltage regulation:

1. Balanced load: Plus or minus 1.0 percent.

2. 50 percent load imbalance, phase-to-phase: Plus or minus 2 percent.

3. No-load voltage modulation: Plus or minus 1 percent.

4. Voltage drift: Plus or minus 1 percent over any 30 day interval (or length of test) at stated ambient conditions.

d. Voltage adjustment: Plus or minus 5 percent manually.

e. Frequency: 60 Hz.

f. Frequency regulation: Plus or minus 0.1 percent.

g. Frequency drift: Plus or minus 0.1 percent over any 24 hour interval (or length of test) at stated ambient conditions when on internal oscillator.

h. Harmonic content (RMS voltage): 3 percent single harmonic, maximum; 5 percent total maximum with linear load. Voltage THD shall be less than 7 percent with up to 50 percent nonlinear load and a crest factor of less than 3 to 1.

i. Load power factor operating range: 1.0 to 0.8 lagging.

j. Phase displacement:

1. Balanced load: Plus or minus 1 degree of bypass input.

2. 50 percent load imbalance phase-to-phase: Plus or minus 3 degrees of bypass input.

k. Wave-form deviation factor: 5 percent at no load.

l. Overload capability (at full voltage) (excluding battery):

1. 125 percent load for 10 minutes.

2. 150 percent load for 30 seconds.

3. 300 percent load for one cycle after which it shall be current limited to 150 percent until fault is cleared or UPS goes to bypass.

m. Load sharing of parallel modules: Plus or minus 5 percent of average load per module.

2.3.6 Transient Response

2.3.6.1 Voltage Transients

a. 50 percent load step/0 percent to 50 percent load: Plus or minus 8 percent.

b. 50 percent load step/50 percent to 100 percent load: Plus or minus 8 percent.

c. Loss or return of ac input: Plus or minus 1 percent.

d. Loss or return of redundant module:

1. Manually: Plus or minus 8 percent.

2. Automatically: Plus or minus 8 percent.

e. Automatic transfer of load from UPS to bypass: Plus or minus 4 percent.

f. Manual retransfer of load from bypass to UPS: Plus or minus 4 percent.

g. Response time: Recovery to 99 percent steady-state condition within 50 milliseconds after any of the above transients.

2.3.6.2 Frequency

a. Transients: Plus or minus 0.5 Hz maximum.

b. Slew Rate: 1.0 Hz maximum per second.

2.3.7 Efficiency

a. Minimum Single-Module Efficiency: 90 percent at full load.

b. Minimum System Efficiency: 89 percent at full system load.

2.4 UPS MODULE

2.4.1 General Description

UPS module shall consist of a rectifier/charger unit and a single-phase inverter unit with their associated transformer, synchronizing equipment, protective devices and accessories as required for operation.

2.4.2 Rectifier/Charger Unit

Rectifier/charger unit shall be solid state and shall provide direct current to the dc bus.

2.4.2.1 Sizing

Rectifier/charger unit shall be sized for the following two simultaneous operating conditions:

a. Supplying the full rated load current to the inverter.

b. Recharging a fully-discharged battery to 95 percent of rated ampere-hour capacity within ten times the discharge time after normal ac power is restored, with the input protective device closed.

2.4.2.2 Battery Charging Current

Primary current limiting: Battery-charging current shall be voltage regulated and current limited. The battery-charging current limit shall be separately adjustable from 2 percent to 25 percent of the maximum discharge current. After the battery is recharged, the rectifier/charger unit shall maintain the battery at full float charge until the next operation under input power failure. Battery charger shall be capable of providing equalizing charge to the battery.

2.4.2.3 Output Filter

Rectifier/charger unit shall have an output filter to minimize ripple current supplied to the battery; the ripple current into the battery shall not exceed 3 percent RMS.

2.4.2.4 dc Voltage Adjustment

Rectifier/charger unit shall have manual means for adjusting dc voltage for battery equalization, to provide voltage within plus 10 percent of nominal float voltage.

2.4.2.5 Battery Isolation Protective Device

Module shall have a dc protective device to isolate the module from the battery system. The protective device size and interrupting rating shall be as required by system capacity and shall incorporate a shunt trip as required by circuit design. The protective device shall have provision for locking in the "off" position.

2.4.3 Inverter Unit

Inverter unit shall be a solid-state device capable of accepting power from the dc bus and providing ac power within specified limits.

2.4.3.1 Output Overload

The inverter shall be able to sustain an overload as specified across its output terminals. The inverter shall not shut off, but shall continue to operate within rated parameters, with inverse-time overload shutdown protection.

2.4.3.2 Synchronism

The inverter shall normally operate in phase-lock and synchronism with the bypass source. Should the bypass source frequency deviate beyond 60 Hz by more than 0.5 Hz, the internal frequency oscillators contained in the power module shall be used to derive the new frequency reference. Upon restoration of the bypass source within the required tolerance, the inverter shall resynchronize with that source at a slew rate not exceeding the specified rate. The oscillator shall be temperature compensated and shall be manually adjustable. The design of the oscillator and synchronizing circuits shall be such that failure of any associated component, connector pin, terminal lead wire or dc power source in either the open or shorted mode shall affect only one inverter leg. Such failure shall not cause transient disturbance of the critical load in excess of the stated limits.

2.4.3.3 Phase Balance

Electronic controls shall be incorporated to provide individual phase voltage compensation to obtain phase balance.

2.4.3.4 Modular Construction

Each control logic printed circuit board shall be electrically and physically packaged on an individual plug-in module with separate indication and adjustments.

2.4.3.5 Output Protective Device

The output protective device shall be capable of shunt tripping and shall have interrupting capacity as specified. Protective device shall have provision for locking in the "off" position.

2.4.3.6 Output Transformer

The inverter output transformer shall be similar to the input transformer and shall be capable of handling up to K-13 nonlinear loads as described in IEEE C57.110.

2.4.4 External Protection

UPS module shall have built-in self-protection against undervoltage, overvoltage, overcurrent and surges introduced on the ac input source and/or the bypass source. The UPS system shall sustain input surges without damage in accordance with IEEE C62.41. The UPS shall also have built-in self-protection against overvoltage and voltage surges introduced at the output terminals by paralleled sources, load switching, or circuit breaker operation in the critical load distribution system.

2.4.5 Internal Protection

UPS module shall be self-protected against overcurrent, sudden changes in output load and short circuits at the output terminals. UPS module shall be provided with output reverse power detection which shall cause that module to be disconnected from the critical load bus when output reverse power is present. UPS module shall have built-in protection against permanent damage to itself and the connected load for predictable types of failure within itself and the connected load. At the end of battery discharge limit, the module shall shut down without damage to internal components.

2.5 STATIC BYPASS TRANSFER SWITCH

A static bypass transfer switch shall be provided as an integral part of the UPS and shall consist of a static switch and a bypass protective device or bypass switch. The control logic shall contain an automatic transfer circuit that senses the status of the inverter logic signals and alarm conditions and provides an uninterrupted transfer of the load to the bypass ac power source, without exceeding the transient limits specified herein, when a malfunction occurs in the UPS or when an external overload condition occurs. The power section of the static bypass transfer switch shall be provided as a plug-in type assembly to facilitate maintenance. The static bypass transfer switch shall be used to connect the bypass ac power source or the UPS inverter output to the critical load when required, and shall have the following features:

2.5.1 Uninterrupted Transfer

The static bypass transfer switch shall automatically cause the bypass ac power source to assume the critical load without interruption when the bypass control logic senses one of the following conditions and the UPS inverter output is synchronized to the bypass ac power source:

a. Inverter overload exceeds unit's rating.

b. Battery protection period is expired and bypass is available.

c. Inverter failure.

2.5.2 Interrupted Transfer

If an overload occurs and the UPS inverter output is not synchronized to the bypass ac power source, the UPS inverter output shall current-limit for 200 milliseconds minimum. The inverter shall then turn off and an interrupted transfer to the bypass ac power source shall be made. If the bypass ac power source is beyond the conditions stated below, an interrupted transfer shall be made upon detection of a fault condition:

a. Bypass voltage greater than plus or minus 10 percent from the UPS rated output voltage.

b. Bypass frequency greater than plus or minus 0.5 Hz from the UPS rated output frequency.

c. Phase differential of ac bypass voltage to UPS output voltage greater than plus or minus 3 degrees.

2.5.3 Manual Transfer

It shall be possible to make a manually-initiated static transfer from the system status and control panel by turning the UPS inverter off.

2.5.4 Automatic Uninterrupted Forward Transfer

The static bypass transfer switch shall automatically forward transfer, without interruption after the UPS inverter is turned "on", or after an instantaneous overload-induced reverse transfer has occurred and the load current has returned to less than the unit's 100 percent rating.

2.5.5 Forced Transfer

The control logic circuitry shall provide the means of making a forced or reverse transfer of the static bypass transfer switch on an interrupted basis. Minimum interruption shall be 200 milliseconds when the UPS inverter is not synchronized to the bypass ac power source.

2.5.6 Overload Ratings

The static bypass transfer switch shall withstand the following overload conditions:

a. 2000 percent of UPS output rating for two cycles.

b. 200 percent of UPS output rating for 5 minutes.

c. 125 percent of UPS output rating for 10 minutes.

2.5.7 Static Switch Disconnect

A static switch disconnect shall be incorporated to isolate the static bypass transfer switch assembly so it can be removed for servicing. The switch shall be equipped with auxiliary contacts and provision for padlocking in either the "on" or "off" position.

2.6 MAINTENANCE BYPASS SWITCH

2.6.1 General

A maintenance bypass switch shall be provided as an integral part of the UPS and located within the UPS module. The maintenance bypass switch shall provide the capability to continuously support the critical load from the bypass ac power source while the UPS is isolated for maintenance. The maintenance bypass switch shall be housed in an isolated compartment inside the UPS cabinet in such a way that service personnel will not be exposed to electrically live parts while maintaining the unit. Switch shall contain a maintenance bypass protective device and a module isolation protective device.

2.6.2 Load Transfer

The maintenance bypass switch shall provide the capability of transferring the critical load from the UPS static bypass transfer switch to maintenance bypass and then back to the UPS static bypass transfer switch with no interruption to the critical load.

2.7 MODULE CONTROL PANEL

The UPS module shall be provided with a control/indicator panel. The panel shall be on the front of the UPS module. Controls, meters, alarms and indicators for operation of the UPS module shall be on this panel.

2.7.1 Module Meters

2.7.1.1 Monitored Functions

The following functions shall be monitored and displayed:

a. Input voltage.

b. Input current.

c. Input frequency.

d. Battery voltage.

e. Battery current (charge/discharge).

f. Output voltage.

2.7.2 Module Controls

Module shall have the following controls:

a. Lamp test/reset pushbutton.

b. Alarm test/reset pushbutton.

c. Module input protective device trip pushbutton, with guard.

d. Module output protective device trip pushbutton, with guard.

e. Battery protective device trip pushbutton, with guard.

f. Emergency off pushbutton, with guard.

g. dc voltage adjustment potentiometer, with locking guard.

h. Control power off switch.

i. UPS/bypass transfer selector switch.

j. Static bypass transfer switch enable/disable selector switch.

2.7.3 Module Alarm Indicators

Module shall have indicators for the following alarm items. Any one of these conditions shall turn on an audible alarm and the appropriate summary indicator. Each new alarm shall register without affecting any previous alarm.

a. Input ac power source failure.

b. Input protective device open.

c. Output protective device open.

d. Overload.

e. Overload shutdown.

f. Low battery.

g. UPS on battery.

h. Critical load on static bypass.

2.8 TEMPERATURE CONTROL

2.8.1 General

Cabinet and enclosure ventilation shall be adequate to ensure that components are operated within their ratings. Forced-air cooled rectifier, inverter, and control unit will be acceptable. The cooling fans shall continue operation if UPS input power is lost. Redundancy shall be provided so that failure of one fan or associated circuit breaker will not cause an overheat condition. Cooling air shall enter the lower front of the cabinets and exhaust at the top. Blower power failure shall be indicated as a visual and audible alarm on the control panel. Air inlets shall have filters that can be replaced without opening the cabinet doors.

2.8.2 Blower Power Source

Blower power source shall be internally derived from the input and output sides of UPS module, with automatic transfer arrangement.

2.8.3 Temperature Sensors

Temperature sensors shall be provided to monitor the air temperature. Separate sensors shall monitor the temperature of rectifier and inverter heat sinks. Separate sensors shall also monitor the transformer temperature. Critical equipment overtemperature indication shall start a timer that shall shut down the UPS system if the temperature does not return below the setpoint level.

2.9 BATTERY SYSTEM

2.9.1 General

A storage battery with sufficient ampere-hour rating to maintain UPS output at full capacity for the specified duration shall be provided for each UPS module. The battery shall be of heavy-duty, industrial design suitable for UPS service. The cells shall be provided with flame arrestor vents, intercell connectors and cables, cell-lifting straps, cell-numbering sets, and terminal grease. Intercell connectors shall be sized to maintain terminal voltage within voltage window limits when supplying full load under power failure conditions. Cell and connector hardware shall be stainless steel of a type capable of resisting corrosion from the electrolyte used.

2.9.2 Battery Construction

The battery shall be of the sealed, non-gassing, recombinant type.

2.10 FACTORY TESTING

2.10.1 General

The UPS system shall be factory tested to meet the requirements specified using a test battery (not the battery to be supplied with the system). UPS module shall be factory load tested as an independent assembly with 3-phase ac input power and with battery power for a minimum of 8 hours, with meter readings taken every 30 minutes. Load shall be balanced at rated kVA and rated power factor. Factory tests for the UPS module shall be run under full load, and will be witnessed by the Government. Should a malfunction occur, the problem shall be corrected and the test shall be repeated. As a minimum, the factory tests shall include the parameters described in paragraphs ac Input, ac Output, Transient Response and Efficiency. The tests shall encompass all aspects of operation, such as module failure, static bypass operation, battery failure, input power failure and overload ratings. The Government shall be notified in writing at least 2 weeks before testing. Factory-test time shall not be used for system debugging and/or checkout. Such work shall be done prior to notifying the Government that the system is ready for testing. Factory tests shall be performed during normal business hours. The system shall be interconnected and tested for an additional 8 hours to ensure proper wiring and performance.

2.10.2 Transient Tests

Transient tests shall be conducted using high-speed oscillograph type recorders to demonstrate the operation of the components to the satisfaction of the Government. These tests shall include 50 percent to 100 percent load changes, manual transfer, manual retransfer, low dc bus initiated transfer and low ac output bus transfer. A recording instrument equipped with an event marker shall be used.

2.10.3 Efficiency Tests

Testing for efficiency shall be performed at zero output up to 100 percent of stated kVA output in 25 percent steps, 0.9 power factor, with battery fully charged and floating on the dc bus, with nominal input voltage, and with modules connected to the system to represent actual operating conditions.

2.11 INSPECTION

Inspection before shipment is required. The manufacturer shall notify the Government at least 2 weeks before shipping date so that an inspection can be made.

PART 3 EXECUTION

3.1 INSTALLATION

The UPS system shall be set in place, wired and connected in accordance with the approved shop drawings and manufacturer's instructions. The UPS battery shall be shipped to the site dry.

3.2 FIELD SUPERVISION, STARTUP AND TESTING

3.2.1 Field Tests

As a minimum, the startup and field test procedures shall include the following:

a. Ensure that shipping members have been removed.

b. Check for damage (dents, scratches, frame misalignment, damage to panel devices, etc).

c. Ensure that interiors are free of foreign materials, tools and dirt.

d. Check doors for proper alignment and operation.

e. Check and test each protective device for proper mechanical and electrical operation.

f. Check protective device overcurrent trip settings.

g. Check and test indicating lights for proper operation and color.

h. Perform onsite field test procedures.

i. Demonstrate to the Government that the specified functions and interlocks have been implemented.

- - o 0 o - -

SECTION 16686 - POWER SUPPLIES

PART 1 - GENERAL

1.1 GENERAL REQUIREMENTS

1.1.1 Standard Product

Material and equipment shall be a standard product of a manufacturer regularly engaged in the manufacture of the product and shall essentially duplicate items that have been in satisfactory use for at least 2 years prior to bid opening. The experience use shall include applications of equipment and materials under similar circumstances and of the same design and rating as the equipment being serviced by an organization that is, in the opinion of the Contracting Officer, reasonably convenient to the site.

1.2 SUBMITTALS

The following shall be submitted in accordance with Section 01300 - SUBMITTALS:

SD-01, Data

Manufacturer's Catalog Cuts

Complete manufacturer's catalog cuts.

Operations and Maintenance Data

Complete manufacturer's catalog cuts.

1.3 EXTRA MATERIALS

As specified in Section 16006 EXTRA MATERIALS.

PART 2 - PRODUCTS

2.1 OPEN-CHASSIS POWER SUPPLIES

Voltage input shall be 95 to 132 VAC, 47 to 440 Hertz. Voltage output shall be as scheduled, plus or minus 5 percent, screwdriver adjustable. Current rating shall be as scheduled. Regulated voltage as follows:

a. Line regulation: 0.1 percent over input range.

b. Load regulation: 0.1 percent.

c. Ripple and noise: 20 mV peak-to-peak.

d. Temperature coefficient: 0.03 percent per degree C.

Efficiency shall be 70 percent, minimum. Provide overload and overvoltage protection. Power supply output shall not overshoot on turn-on, turn-off, or power failure. Temperature ratings shall be 0 to 60 degrees C.

PART 3 - EXECUTION

3.1 SCHEDULE

3.1.1 24 Vdc for Analog Loops at PLC:

0.8 amperes at 40 degrees C, 0.4 amperes at 60 degrees C.

3.1.2 24 Vdc for Digital Outputs at PLC:

20 amperes at 40 degrees C, 10 amperes at 60 degrees C.

- - o O o - -

SECTION 16721

FIRE DETECTION AND ALARM SYSTEM

PART 1 GENERAL

1.1 REFERENCES

The publications listed below form a part of this specification to the extent referenced. The publications are referred to in the text by basic designation only.

AMERICAN NATIONAL STANDARDS INSTITUTE (ANSI)

ANSI C135.30	(1988) Zinc-Coated Ferrous Ground Rods for Overhead or Underground Line Construction

FACTORY MUTUAL ENGINEERING AND RESEARCH (FM)

FM P7825	(1994; Supple 1) Approval Guide

INSTITUTE OF ELECTRICAL AND ELECTRONICS ENGINEERS (IEEE)

IEEE C62.41	(1991) Surge Voltages in Low-Voltage AC Power Circuits

NATIONAL FIRE PROTECTION ASSOCIATION (NFPA)

NFPA 70	(1993) National Electrical Code
NFPA 72	(1993) National Fire Alarm Code
NFPA 90A	(1993) Installation of Air Conditioning and Ventilating Systems

UNDERWRITERS LABORATORIES (UL)

UL-04	(1994) Fire Protection Equipment Directory
UL 6	(1993) Rigid Metal Conduit
UL 38	(1994; Rev Jan 1994) Manually Actuated Signaling Boxes for Use with Fire-Protective Signaling Systems
UL 228	(1993) Door Closers-Holders, with or without Integral Smoke Detectors
UL 268	(1989; Rev May 1989) Smoke Detectors for Fire Protective Signaling Systems
UL 464	(1990) Audible Signal Appliances
UL 467	(1993) Grounding and Bonding Equipment
UL 521	(1993) Heat Detectors for Fire Protective Signaling Systems
UL 797	(1993) Electrical Metallic Tubing
UL 864	(1991; Rev thru May 1994) Control Units for Fire-Protective Signaling Systems
UL 1242	(1983; Rev thru Jul 1993) Intermediate Metal Conduit

1.2 GENERAL REQUIREMENTS

1.2.1 Standard Products

Material and equipment shall be the standard products of a manufacturer regularly engaged in the manufacture of the products and shall be items that have been in satisfactory use for at least 10 years prior to bid opening. Equipment shall be supported by a service organization that can provide service within 24 hours.

1.2.2 Nameplates

Major components of equipment shall have the manufacturer's name, address, type or style, voltage and current rating, and catalog number on a noncorrosive and nonheat-sensitive plate which is securely attached to the equipment.

1.2.3 Keys and Locks

Locks shall be keyed alike.

1.2.4 Tags

Tags with stamped identification number shall be furnished for keys and locks.

1.2.5 Verification of Dimensions

The Contractor shall become familiar with all details of the work, verify all dimensions in the field, and shall advise the Contracting Officer of any discrepancy before performing the work.

1.2.6 Compliance

The fire detection and internal alarm system and the central reporting system shall be configured in accordance with NFPA 72. The equipment furnished shall be compatible and be UL listed or FM approved or approved or listed by a nationally recognized testing laboratory in accordance with the applicable NFPA standards.

1.2.7 Manufacturer's Services

Services of a manufacturer's representative who is experienced in the installation, adjustment, testing, and operation of the equipment specified shall be provided. The representative shall supervise the installation, adjustment, and testing of the equipment.

1.3 SYSTEM DESIGN

1.3.1 Operation

The fire alarm and detection system shall be a complete, supervised fire alarm system. The system shall be activated into the alarm mode by actuation of any alarm initiating device. The system shall remain in the alarm mode until initiating device is reset and the fire alarm control panel is reset and restored to normal. Alarm initiating devices shall be connected to initiating device circuits (IDC), Style D, or to signal line circuits (SLC), Style 6, in accordance with NFPA 72. Alarm indicating appliances shall be connected to indicating appliance circuits (IAC), Style Z in accordance with NFPA 72. A two-loop conduit system shall be provided so that if any one conduit and all conductors contained in that conduit are severed all IDC, IAC, or SLC on that circuit shall remain functional. A two-loop system is not applicable to the central fire alarm communication center from the local panels. All textual, audible, and visual appliances and systems shall comply with NFPA 72.

Addressable system shall be microcomputer (microprocessor or microcontroller) based with a minimum word size of eight bits.

a. Sufficient memory shall be provided to perform as specified and as shown for addressable system.

b. Individual identity of each addressable device shall be provided for the following conditions:
   1. Alarm.
   2. Trouble.
   3. Open.
   4. Short.
   5. Appliances missing/failed.
   6. Remote detector - sensitivity adjustment from the panel for smoke detectors.

c. All addressable devices shall have the capability of individually being disabled or enabled from the panel.

1.3.2 Operational Features

The system shall have the following operating features:

a. Electrical supervision of alarm IDC, SLC, and IAC. Smoke detectors shall have combined alarm initiating and power circuits.

b. Electrical supervision of the primary power (ac) supply, battery voltage, placement of alarm zone module (card, PC board) within the control panel, and transmitter tripping circuit integrity.

c. Trouble buzzer and trouble lamp (light emitting diode or neon light) to activate upon a single break, open, or ground fault condition which prevents the required normal operation of the system. The trouble signal shall also operate upon loss of primary power (ac) supply, low battery voltage, removal of alarm zone module (card, PC board), and disconnection of the circuit used for transmitting alarm signals off-premises. A trouble alarm silence switch shall be provided which will silence the trouble buzzer, but will not extinguish the trouble indicator lamp. After the system returns to normal operating conditions, the trouble buzzer shall again sound until the silencing switch returns to normal position, unless automatic trouble reset is provided.

d. Transmitter disconnect switch to allow testing and maintenance of the system without activating the transmitter but shall provide a trouble signal when disconnected and a restoration signal when reconnected. One person test mode - Activating an initiating device in this mode will activate an alarm for a short period of time, then automatically reset the alarm, without activating the transmitter during the entire process.

e. Evacuation alarm silencing switch or switches which, when activated, will silence alarm devices, but will not affect the zone indicating lamp nor the operation of the transmitter. This switch shall be over-ridden upon activation of a subsequent alarm from an unalarmed zone and the alarm devices will be activated.

f. Electrical supervision of circuits used for supervisory signal services. Supervision shall detect any open, short, or ground.

g. Confirmation or verification modules used on smoke detection initiating circuits. The modules shall interrupt the transmission of an alarm signal to the system control panel for a factory set period. This interruption period shall be adjustable from 1 to 60 seconds and be factory set at 20 seconds. Immediately following the interruption period, a confirmation period shall be in effect during which time an alarm signal if present will be sent immediately to the control panel. All fire alarm devices other than smoke detectors shall be prohibited on circuits controlled by confirmation or verification modules.

h. Zones for alarm IDC or SLC shall be arranged as indicated on the contract drawings.

1.3.3 Alarm Functions

An alarm condition on a circuit shall automatically initiate the following functions:

a. Transmission of signals over the station radio fire reporting system. The signals shall be different for each zone.

b. Visual indications of the alarmed zones on the fire alarm control panel annunciator.

c. Continuous sounding of alarm notification appliances only in designated areas.

d. Operation of the smoke control system.

e. Deactivation of the air handling units in the alarmed zone.

1.3.4 Primary Power

Operating power shall be provided as required by paragraph Power Supply for the System. Transfer from normal to emergency power or restoration from emergency to normal power shall be fully automatic and not cause transmission of a false alarm. Loss of ac power shall not prevent transmission of a signal via the fire reporting system upon operation of any initiating circuit.

1.3.5 Battery Backup Power

Battery backup power shall be through use of rechargeable, sealed-type storage batteries and battery charger.

1.4 SUBMITTALS

The following shall be submitted in accordance with Section 01300 SUBMITTAL PROCEDURES:

SD-01 Data

Battery.

Substantiating battery calculations for supervisory and alarm power requirements. Ampere-hour requirements for each system component and each panel component, and the battery recharging period shall be included.

Voltage Drop.

Voltage drop calculations for signaling appliance circuits to indicate that sufficient voltage is available for proper appliance operation.

Spare Parts.

Spare parts data for each different item of material and equipment specified, not later than 2 months prior to the date of beneficial occupancy. Data shall include a complete list of parts and supplies with the current unit prices and source of supply and a list of the parts recommended by the manufacturer to be replaced after 1 year of service.

Qualifications.

Qualifications, with verification of experience and license number, of a Registered Professional Engineer with at least 4 years of current experience in the design of the fire protection and detection systems. This engineer must perform the various specification items required by this section to be performed by a registered Professional Engineer.

SD-04 Drawings

Fire Alarm Reporting System.

Detail drawings, signed by the Registered Professional Engineer, consisting of a complete list of equipment and material, including manufacturer's descriptive and technical literature, catalog cuts, and installation instructions. Note that the contract drawings show layouts based on typical detectors. The contractor shall check the layout based on the actual detectors to be installed and make any necessary revisions in the detail drawings. The detail drawings shall also contain complete wiring and schematic diagrams for the equipment furnished, equipment layout, and any other details required to demonstrate that the system has been coordinated and will properly function as a unit.

Detailed point-to-point wiring diagram, signed by the Registered Professional Engineer, showing all points of connection. Diagram shall include connections between system devices, appliances, control panels, supervised devices, and all equipment that is activated or controlled by the panel.

SD-06 Instructions

Fire Alarm Reporting System.

Six copies of operating instructions outlining step-by-step procedures required for system startup, operation, and shutdown. The instructions shall include the manufacturer's name, model number, service manual, parts list, and brief description of all equipment and their basic operating features. Six copies of maintenance instructions listing routine maintenance procedures, possible breakdowns and repairs, and troubleshooting guide. The instructions shall include conduit layout, equipment layout and simplified wiring, and control diagrams of the system as installed. Instructions shall be approved prior to training.

Training.

Lesson plans and training data, in manual format, for the training courses.

SD-08 Statements

Test Procedures.

Detailed test procedures, signed by the Registered Professional Engineer, for the fire detection and alarm system 60 days prior to performing system tests.

SD-09 Reports

Testing.

Test reports in booklet form showing all field tests performed to prove compliance with the specified performance criteria, upon completion and testing of the installed system. Each test report shall document all readings, test results and indicate the final position of controls.

SD-13 Certificates

Equipment.

Certified copies of current approvals or listings issued by UL, FM or other nationally recognized testing laboratory, showing compliance with specified NFPA standards.

Installer.

The Contractor shall provide documentation demonstrating that its fire detection and alarm system installer has been regularly engaged in the installation of fire detection and alarm systems meeting NFPA standards for

a minimum of three years immediately preceding commencement of this contract. Such documentation shall specifically include proof of satisfactory performance on at least three projects similar to that required by these specifications, including the names and telephone numbers of using agency points of contact for each of these projects. Documentation shall indicate the type of each system installed and include a written certificate that each system has performed satisfactorily in the manner specified for a period of not less than 12 months following completion. All such data shall be submitted 30 days prior to commencement of installation for approval of the Contracting Officer. Listing of the installer under "Protective Signaling Services - Local, Auxiliary, Remote Station Proprietary (UUJS)" of UL-04 shall be accepted as equivalent proof of compliance with the foregoing experience requirements.

1.5 DELIVERY AND STORAGE

All equipment delivered and placed in storage shall be stored with protection from the weather, humidity and temperature variation, dirt and dust, and any other contaminants.

PART 2 PRODUCTS

2.1 CONTROL PANEL

Control Panel shall comply with all the applicable requirements of UL 864. Panel shall be modular, installed in a semi-flush mounted steel cabinet with hinged door and cylinder lock. Control panel shall be a clean, uncluttered, and orderly assembled panel containing all components and equipment required to provide the specified operating and supervisory functions of the system. The panel shall have prominent rigid plastic, phenolic or metal identification plates for all lamps, zones, controls, meters, fuses, and switches. Nameplates for fuses shall also include ampere rating. Separate alarm and trouble lamp shall be provided for each zone alarm located on exterior of cabinet door or be visible through the cabinet door. Control panel switches shall be within the locked cabinet. A suitable means shall be provided for testing the control panel visual indicating devices (meters or lamps). Meters and lamps shall be plainly visible when the cabinet door is closed. Signals shall be provided to indicate by zone any alarm, supervisory or trouble condition on the system. Each IDC and SLC initiating circuit shall be powered and supervised so that a signal on one zone does not prevent the receipt of signals from other zones. Loss of power, including any or all batteries, shall not require the reloading of a program. Upon restoration of power, startup shall be automatic, and shall not require any manual operation. The loss of primary power or the sequence of applying primary or emergency power shall not affect the transmission of alarm, supervisory or trouble signals.

2.1.1 Visual Annunciators

Visual annunciators shall be provided for each active zone and spare zone. Two spare zones shall be provided. Each lamp shall provide specific identification of the zone by means of a permanently attached rigid plastic, phenolic or metal sign with either raised or engraved letters. Zone identification shall consist of word description of the zone.

2.1.2 Cabinets

Cabinets shall be provided with ample gutter space to allow proper clearance between the cabinet and live parts of the panel equipment. If more than one modular unit is required to form a control panel, the units shall be installed in a single cabinet large enough to accommodate all units. Cabinets shall have manufacturer's standard finish and color.

2.1.3 Circuit Connections

Circuit conductors entering or leaving the panel shall be connected to screw-type terminals with each terminal marked for identification.

2.2 STORAGE BATTERIES

Storage Batteries shall be provided and shall be the sealed, lead-calcium type requiring no additional water. The batteries shall have ample capacity, with primary power disconnected, to operate the fire alarm system for a period of 48 hours. Following this period of operation via batteries, the batteries shall have ample capacity to operate all components of the system, including all alarm signaling devices in the total alarm mode for a minimum period of 15 minutes. Batteries shall be sized to deliver 50 percent more ampere/hours based on a 48 hour discharged rate than required for the calculated capacities. Battery cabinet shall be a separate compartment within the control panel. Batteries in the control panel shall be located at the bottom of the panel. Battery shall be provided with overcurrent protection in accordance with NFPA 72.

2.3 BATTERY CHARGER

Battery charger shall be completely automatic, with high/low charging rate, capable of restoring the batteries from full discharge to full charge within 12 hours. A separate ammeter shall be provided for indicating rate of charge. A separate voltmeter shall be provided to indicate the state of the battery charge. A pilot light indicating when batteries are manually placed on a high rate of charge shall be provided as part of the unit assembly if a high rate switch is provided. Charger shall be located in control panel or battery cabinet.

2.4 MANUAL FIRE ALARM STATIONS

Manual fire alarm stations shall conform to the applicable requirements of UL 38. Manual stations shall be connected into alarm-initiating circuits. Stations shall be installed on semi-flush mounted outlet boxes. Stations shall be double action type. Stations shall be finished in red, with raised letter operating instructions of contrasting color. Stations requiring the breaking of glass or plastic panels for operation are not acceptable. Stations employing glass rods are not acceptable. The use of a key or wrench shall be required to reset the station. Gravity or mercury switches are not acceptable. Switches and contacts shall be rated for the voltage and current upon which they operate. Stations shall have a separate screw terminal for each conductor. Surface mounted boxes shall be painted the same color as the fire alarm manual stations. Addressable pull stations shall be capable of being field programmed, shall latch upon operation and remain latched until manually reset.

2.5 FIRE DETECTING DEVICES

Fire detecting devices shall comply with the applicable requirements of NFPA 72, NFPA 90A, UL 268, and UL 521. The detectors shall be provided as indicated. Detector base shall have screw terminals for making connections. No solder connections will be allowed. Detectors shall be connected into alarm initiating circuits. Detectors located in concealed locations (above ceiling, etc.) shall have a remote visible indicator lamp. Installed devices shall conform to the classification of the area. Addressable fire detecting devices except flame detectors shall be dynamically supervised and uniquely identified in the control panel.

2.5.1 Heat Detectors

Heat detectors shall be designed for detection of fire by fixed temperature or combination fixed temperature and rate-of-rise principle. Heat detectors shall be rated for a minimum of 15.2 m (50 foot) spacing (smooth-ceiling rated) in accordance with UL 521. Detectors located in areas subject to moisture, exterior atmospheric conditions or hazardous locations as defined by NFPA 70, shall be types approved for such locations. Heat detectors located in attic spaces or similar concealed spaces below the roof shall be intermediate temperature rated.

2.5.1.1 Combination Fixed-Temperature and Rate-of-Rise Detectors

Detectors shall be designed for semi-flush outlet box mounting and supported independently of wiring connections. Contacts shall be self-resetting after response to rate-of-rise principle. Under fixed temperature actuation, the detector shall have a permanent external indication which is readily visible. Detector units located in boiler rooms, showers, or other areas subject to abnormal temperature changes shall operate on fixed temperature principle only. Rating for fixed temperature portion shall be 135 degrees F) in temperature conditioned spaces.

2.5.1.2 Fixed Temperature Detectors

Detectors shall be designed for surface outlet box mounting and supported independently of wiring connections. Detectors are designed to detect high heat. The detectors shall have a specific temperature setting 190 degrees F.

2.5.2 Smoke Detectors

Detectors shall be designed for detection of abnormal smoke densities. Smoke detectors shall be photoelectric type. Detectors shall contain a visible indicator lamp that shows when the unit is in alarm condition. Detectors shall not be adversely affected by vibration or pressure. Detectors shall be the plug-in type in which the detector base contains terminals for making all wiring connections. Detectors that are in concealed (above false ceilings, etc.) locations shall have a remote visible indicator lamp.

2.5.2.1 Photoelectric Detectors

Detectors shall operate on a light scattering concept using an LED light source. Failure of the LED shall not cause an alarm condition. Detectors shall be factory set for sensitivity and shall require no field adjustments of any kind. Detectors shall have an obscuration rating between 1.9 and 2.4 percent per foot when tested in accordance with UL 268.

2.5.2.2 Duct Detectors

Duct detectors are provided under Section 15950 Heating, Ventilation, and Air Conditioning HVAC Control Systems.

2.5.3 Addressable Interface Module (AIM)

Provide AIMs for interfacing normally open, direct-contact devices to addressable signaling line circuit. Mounting shall be surface or flush, standard electric outlet box with cover plates. Power shall be 24 volts dc from separate, 2-wire pairs running from fire alarm control panel.

Monitor AIM:

a. Use: For conventional 2-wire smoke detector and/or contact device monitoring with Class A (NFPA-72 initiating device circuit) wiring supervision.

b. Addressable device module shall provide power to and monitor status of zone consisting of conventional N/O contact devices.

c. Supervision of initiating device circuit wiring: Class A.

d. Unit shall communicate zone status (normal, alarm, trouble) to control panel.

AIM shall be supervised and identified by address at control panel at Control Building. If AIM becomes nonoperational, tampered with, or removed, discrete trouble signal, unique to device, shall be transmitted to, and annunciated at, control panel.

AIM shall be capable of being programmed for its "address" location on addressable device. AIM shall be compatible with addressable manual stations and addressable detectors on same addressable circuit.

AIM failure will not hinder operation of other system devices.

2.6 NOTIFICATION APPLIANCES

Audible appliances shall be heavy duty and conform to the applicable requirements of UL 464. Devices shall be connected into alarm indicating circuits \&and shall have a separate screw terminal for each conductor. Devices shall have manufacturer's standard finish and color.

2.6.1 Alarm Horns

Horns shall be surface mounted, with the matching mounting back box surface mounted or recessed grill and vibrating type suitable for use in an electrically supervised circuit. Horns shall produce a minimum sound rating of at least 85 dBA at 3.048 m (10 feet). Horns used in exterior locations shall be specifically listed or approved for outdoor use and be provided with metal housing and protective grills.

2.6.2 Visual Notification Appliances

Visual notification appliances shall have high intensity optic lens and flash tubes. Strobes shall flash at approximately 1 flash per second and a minimum of 15 candela (8,000 peak candle power). Strobe shall be surface or semi-flush mounted.

2.6.3 Combination Audible/Visual Notification Appliances

Combination audible/visual notification appliances shall provide the same requirements as individual units except they shall mount as a unit in standard backboxes. All units shall be factory assembled. Any other audible indicating appliance employed in the fire alarm systems shall be approved by the authority having jurisdiction.

2.7 FIRE DETECTION AND ALARM SYSTEM PERIPHERAL EQUIPMENT

2.7.1 Ground Rods

Ground rods shall be of copper clad steel conforming to UL 467 not less than 3/4 inch) in diameter by 10 feet in length of the sectional type.

2.7.2 Conduit

Conduit and fittings shall comply with UL 6, UL 1242 and UL 797.

2.7.3 Wiring

Wiring for 120V ac power shall be No. 12 AWG minimum. Wiring for low voltage dc circuits shall be No. 14 AWG minimum. Power wiring (over 28 volts) and control wiring shall be isolated. All wiring shall conform to NFPA 70. System field wiring shall be solid copper and installed in metallic conduit or electrical metallic tubing, except rigid plastic conduit may be used under slab-on-grade. All conductors shall be color coded. Conductors used for the same functions shall be similarly color coded. Wiring code color shall remain uniform throughout the circuit. Pigtail or T-tap connections to alarm initiating, supervisory circuits, and alarm indicating circuits are prohibited. T-tapping using screw terminal blocks is allowed for addressable systems.

2.7.4 Special Tools and Spare Parts

Special tools necessary for the maintenance of the equipment shall be furnished. Two spare fuses of each type and size required and five spare lamps and LED's of each type shall be furnished. Two percent of the total number of each different type of detector, but no less than two each, shall be furnished. Fuses and lamps shall be mounted in the fire alarm panel.

2.8 FIRE ALARM TRANSCEIVER

Transceiver shall be model BT2-4 as manufactured by Monoco to be compatible with the existing base fire alarm receiving system.

PART 3 EXECUTION

3.1 INSTALLATION

All work shall be installed as shown and in accordance with the manufacturer's diagrams and recommendations, unless otherwise specified. Smoke detectors shall not be installed until the building has been thoroughly cleaned.

3.1.1 Power Supply for the System

A single dedicated circuit connection for supplying power to each building fire alarm system shall be provided. The primary power shall be supplied as shown on the drawings. The power supply shall be equipped with a locking mechanism and marked "FIRE ALARM CIRCUIT CONTROL".

3.1.2 Wiring

Conduit size for wiring shall be in accordance with NFPA 70. Wiring for the fire alarm system shall not be installed in conduits, junction boxes, or outlet boxes with conductors of lighting and power systems. No more than one conductor shall be installed under any screw terminal. All circuit conductors entering or leaving any mounting box, outlet box enclosure or cabinet shall be connected to screw terminals with each terminal marked in accordance with the wiring diagram. Connections and splices shall be made using screw terminal blocks. The use of wire nut type connectors are prohibited in the system. Wiring within any control equipment shall be readily accessible without removing any component parts. The fire alarm equipment manufacturer's representative shall be present for the connection of wiring to the control panel.

3.1.3 Control Panel

The control panel and its assorted components shall be mounted so that no part of the enclosing cabinet is less than 300 mm (12 inches) nor more than 2 m (78 inches) above the finished floor. All manually operable controls shall be between 900 mm (36 inches) to 1.1 m (42 inches) above the finished floor. Panel shall be installed to comply with the requirements of UL 864.

3.1.4 Detectors

Detectors shall be installed in accordance with NFPA 72. Detectors shall be at least 300 mm (12 inches) from any part of any lighting fixture. Detectors shall be located at least 900 mm (3 feet) from diffusers of air handling systems. Each detector shall be provided with appropriate mounting hardware as required by its mounting location. Detectors which mount in free space shall be mounted directly to the end of the stubbed down rigid conduit drop. Conduit drops shall be firmly secured to minimize detector sway. Where length of conduit drop from ceiling or wall surface exceeds 900 mm, (3 feet,) sway bracing shall be provided.

3.1.5 Notification Appliances

Notification appliances shall be mounted a minimum of 2.4 m (8 feet) above the finished floor unless limited by ceiling height or otherwise indicated.

3.2 OVERVOLTAGE AND SURGE PROTECTION

All equipment connected to alternating current circuits shall be protected from surges per IEEE C62.41 and NFPA 70. All cables and conductors which serve as communications links, except fiber optics, shall have surge protection circuits installed at each end. Fuses shall not be used for surge protection.

3.3 GROUNDING

Grounding shall be provided to building ground or ground rods shall be driven. Maximum impedance to ground shall be 25 ohms.

3.4 TESTING

The Contractor shall notify the Contracting Officer 30 days before the preliminary and acceptance tests are to be conducted. The tests shall be performed in accordance with the approved test procedures in the presence of the Contracting Officer. The control panel manufacturer's representative shall be present to supervise all tests. The Contractor shall furnish all instruments and personnel required for the tests.

3.4.1 Preliminary Tests

Upon completion of the installation, the system shall be subjected to functional and operational performance tests including tests of each installed initiating and notification appliance. Tests shall include the meggering of all system conductors to determine that the system is free from grounded, shorted, or open circuits. The megger test shall be conducted prior to the installation of fire alarm equipment. If deficiencies are found, corrections shall be made and the system shall be retested to assure that it is functional.

3.4.2 Acceptance Test

Testing shall be in accordance with NFPA 72. The recommended tests in NFPA 72 shall be considered mandatory and shall verify that all previous deficiencies have been corrected. The test shall include the following:

a. Test of each function of the control panel.

b. Test of each circuit in both trouble and normal modes.

c. Tests of alarm initiating devices in both normal and trouble conditions.

d. Tests of each control circuit and device.

e. Tests of each alarm notification appliance.

f. Tests of the battery charger and batteries.

g. Complete operational tests under emergency power supply.

h. Visual inspection of all wiring connections.

i. Opening the circuit at each alarm initiating device and notification appliance to test the wiring supervisory feature.

j. Ground fault.

k. Short circuit faults.

l. Stray voltage.

m. Loop resistance.

3.5 TRAINING

Training course shall be provided for the operations and maintenance staff. The course shall be conducted in the building where the system is installed or as designated by the Contracting Officer. The training period shall consist of 3 training days (8 hours per day) and shall start after the system is functionally completed but prior to final acceptance tests. The instructions shall cover all of the items contained in the operating and maintenance instructions.

- - o 0 o - -

SECTION 16742 - AUTOMATIC DIALERS

PART 1 - GENERAL

1.1 GENERAL REQUIREMENTS

1.1.1 Standard Product

Material and equipment shall be a standard product of a manufacturer regularly engaged in the manufacture of the product and shall essentially duplicate items that have been in satisfactory use for at least 2 years prior to bid opening. The experience use shall include applications of equipment and materials under similar circumstances and of the same design and rating as the equipment specified. Equipment items shall be capable of being serviced by an organization that is, in the opinion of the Contracting Officer, reasonably convenient to the site.

1.2 SUBMITTALS

The following shall be submitted in accordance with Section 01300 - SUBMITTALS:

SD-01, Data

Manufacturer's Catalog Cuts

Complete manufacturer's catalog cuts.

Connection diagram with terminal board layout.

Operations and Maintenance Data

Copies of final, corrected submittals including:

a. Manufacturer's literature

b. Connection diagram with terminal board layout

c. Instructions for Dialer.

d. Manufacturer's standard O & M Manuals for Dialer.

e. Complete manufacturer's catalog cuts.

1.3 EXTRA MATERIALS

As specified in Section 16006 EXTRA MATERIALS.

PART 2 - PRODUCTS

2.1 AUTOMATIC DIALER

2.1.1 8-channel dialer.

2.1.2 Environmental:

a. Temperature: Minus 10 degrees F to plus 130 degrees F.

b. Humidity: 90 percent relative humidity, non-condensing.

c. EMI/RFI: Per FCC part 15C.

2.1.3 Electrical:

a. Power Requirements: 120VAC, 50/60 Hertz, 15W.

b. Fault sensing current: 10mA per channel.

c. Battery backup: 4 hours.

d. Power outage detection time: 60 seconds.

2.1.4 Physical:

a. Mounting: 4-point flange.

b. Enclosure: NEMA 12.

2.1.5 Telephone System:

a. FCC registered for direct interconnect.

b. Built-in speaker phone: Front keypad selectable for speaker phone operation mode, for answering and originating calls, and for alarm message interrupt.

c. Dialing Capacity: 8 numbers, 16 digits each, maximum.

d. Dialing Format: Loop disconnect, 10pps nominal, or tone, user selectable.

e. Answer Delay: 2 or 8 rings, programmable.

f. Acknowledged Intercall Delay: 1 to 99 hours, programmable.

g. Acknowledgment: Tone (push *) or callback, mixable.

h. Unacknowledged Intercall Delay: 1 minute.

2.1.6 Operational:

a. Fault Channel Inputs: Eight.

b. Fault Detection Method: Normally open or closed, field selectable.

c. Fault Integration Time Constant: 1 to 60 seconds.

d. Station Identification: Synthesized voice, user selectable lexicon, user programmable messages, 100 word internal vocabulary, water specific.

e. Message Repetitions: 1 to 20, user programmable.

f. Data Retention: Nonvolatile EEPROM.

2.1.7 Programming: Local keyboard entry.

2.1.8 Remote: Via touch-tone phone or tone generator:

a. Add, modify or delete phone numbers.

b. Read all identification and alarm messages.

c. Change the intercall delay.

d. Execute a call forwarding or call back command.

2.1.9 System Diagnostics:

2.1.9.1 Audible indicators:

a. Line monitor.

b. Local status of all data, fault conditions and system parameters.

2.1.9.2 Visual indicators:

a. Fault channels.

b. Call in progress.

c. Incoming call.

d. Power on.

e. Battery condition.

f. Intercall delay in progress.

g. Successful acknowledgement.

2.1.10 System shall call phone numbers in sequence until acknowledged.

2.1.11 Audio Monitoring: Entered by keystroke sequence on a touch-tone phone or tone generator; after dialing unit or alarm acknowledgement.

2.1.12 Pushbuttons for Halt and Run.

2.2 PROGRAMMER

Designed for use with auto dialer above.

PART 3 - EXECUTION

3.1 PROGRAMMING

Contractor shall perform the initial programming and messages. Phone numbers and message texts shall be provided by the Government.

3.2 TESTS

Confirm that the telephone lines are installed, connected and operating. Test programming by shutting or opening inputs (as required by PLC logic) and verifying that proper numbers are dialed and that proper messages are transmitted.

3.3 TRAINING

Contractor shall provide O&M training to government personnel as follows:

Class Room Training:

Provide course outline, class room materials and a qualified instructor to insure that government personnel acquire sufficient theoretical knowlegde. Video tape class room presentations.

- - o O o - -

SECTION 16745 - OPERATOR INTERFACE SYSTEM

PART 1 GENERAL

1.1 SYSTEM DESCRIPTION

Operator Interface System shall be located in Administration/Control/ Laboratory Building. Operator Interface System hardware shall consist of one Operator Interface Unit (OIU) and one alarm/event printer. Operator Interface Software shall consist of development package to modify any and all software and/or graphics as described in PART 2 and site specific plant graphics and Operator interface.

1.2 SUBMITTALS

The following shall be submitted in accordance with Section 01300 - SUBMITTALS:

SD-01, Data

Manufacturer's literature for hardware.

Manufacturer's literature for Operator Interface Software PLC Interface. Furnish a demonstration package (disks, user's manual, and tutorial) for review. Package will be returned at end of project.

Listing of Operator Interface System software tags. As a minimum, use format of location abbreviation followed by function followed by tag number, such as INFLOFI131B, BSCFNRYA141. Additionally, tags shall be as descriptive as possible within the constraints of the OIU software.

Graphics, reports, and logs for Operator Interface Unit.

List of text for alarms:
- a. For graphics.
- b. For printer.

List of text for events:
- a. For graphics.
- b. For printer.

Operation and Maintenance Data

Programmer's reference manual for Operator Interface Software.

Two original sets of computer operations manuals and DOS manuals.

Four sets of Operator Interface Software:
- a. Listings of graphics, reports, and logs.
- b. List of all interface points between OIU and PLC.
- c. Updated listings of text messages.

Software:
- a. Furnish one complete set of original publisher's copies of Operator Interface, and DOS software on diskettes.
- b. Furnish clearly labeled backup diskettes of all software.
- c. Furnish one complete set of each set of software on the hard disk.
- d. Furnish one clearly labeled set of diskettes containing all of the custom software for this project. Furnish another set of backups, labeled as such. Place date on each label.
- e. Furnish all custom software on hard disk or in PLC (Section 16903) memory as appropriate.

Complete, concise, written, step-by-step instructions for re-booting system. Assume all files, including DOS, config.sys, autoexec.bat, and command.com have been erased from the hard drive.

1.3 EXTRA MATERIALS

Provide the following extra materials:

a. One box of paper for each printer.

b. Two sets ribbons and cartridges for printers.

c. Ten of each type of diskette used in the system, formatted.

PART 2 - PRODUCTS

2.1 OPERATOR INTERFACE UNIT (OIU)

2.1.1 Desk Top Computer (minimum requirements):

2.1.1.1 Central Processing Unit (CPU)

80486, 12MB RAM, 212MB hard disk drive (fully formattable in a maximum of two partitions with the furnished DOS), 33MHz clock speed, built-in time and date clock (including day of week), IBM compatible SVGA video board, multifunction card as required for software, one port for connection to printer, one port for connection to mouse, one communications port for connection to Programmable Logic Controller, one spare serial port, one spare parallel port, and all other accessories and boards needed for complete system operation.

a. Floppy Disk Drives:

1) 1.2MB 5.25-inch drive which will also read/write 360KB and 720KB diskettes.

2) 1.4MB 3.5-inch drive.

b. Disk Operating System: Latest version of MS-DOS or other DOS which can fully and properly format the hard disk in a maximum of two partitions.

c. BIOS: 100 percent IBM compatible.

d. Completely compatible with and completely equipped to run the Operator Interface Software and to communicate with the PLC.

2.1.2 Monitor:

1024x768 pixels, SVGA color display with 13 inch screen.

2.1.3 Keyboard and Accessories:

2.1.3.1 Keyboard:

Positive feel, 101-key, enhanced. Keytronics, or Engineer approved equivalent.

2.1.3.2 Dust Cover:

Form-fitted to cover each individual key and compatible with keyboard provided.

2.1.4 Mouse:

Microsoft serial compatible, 3 button. Logitech or Engineer approved equivalent.

2.2 PRINTERS

24-pin dot matrix with built-in push tractor for 9-1/2 x 11 inch tractor paper; rated at minimum 220 CPS; tested on actual mixed text and demonstrated to print a true 150 CPS. Provide minimum 16K hardware spooler in each printer. Quantity: One shall function as alarm/event printer. Epson LQ870 or Engineer approved equivalent.

2.3 OPERATOR INTERFACE SOFTWARE

2.3.1 PLC Interface:

2.3.1.1 Menus:

Pull-down.

2.3.1.2 Major functions:

a. To DOS: Two methods shall be available by which the user can exit from the OIS environment, thus returning to DOS. The first method shall allow the OIS to continue monitoring the plant process while the computer is free to run other third-party software. This capability is referred to as "backgrounding." The second method shall close all files and reboot the system.

b. Run Mode: Screens created in the report editing and graphic editing environments shall run with real-time communication updates. Actual updates shall include date, time, and tags. The user shall be able to acknowledge alarms, force values, print reports, and view assignments.

c. Report Editing: This environment shall provide the user with a text editor designed to allow the use of the standard ASCII character set in conjunction with foreground and background colors, allow access to real-time data, and print hard copy based on time, interval or tag status, and to set and delete tags.

d. Graphic Editing: This environment shall allow the user to design a graphic representation of the plant or process. The graphics editor shall provide several types of tools which range from rubber-banding boxes and circles to establishing trending symbols for real-time update.

e. Utilities: This environment shall provide functions such as: set passwords, control the network, recall standard archived files or trending archived files, direct PLC read/writes, or utilize the electronic mailbox.

f. Help: Help menus shall be available at the stroke of a key in all areas of the system.

2.3.1.3 System Features:

a. Archiving (logging): Save on disk selected data for later reporting, comparison and analysis.

b. Backgrounding: Performs other tasks while the system continues to monitor, force, alarm, and collect information on designated data points.

c. Color Printer Support: Both black and white and color printers are supported for hard-copy generation.

d. Graphics: 16 high resolution colors for easily-understood displays and reports.

e. Help Menus: On-screen directions on how to operate the package available at all stages of screen development.

f. Keystroking: Minimum keystroking for altering screens or moving from one environment to any other environment.

g. Multiple PLCs Per Page: View data from multiple programmable logic controllers of the same manufacturer on a single screen.

h. Password Security: Several levels of passwords guard against unauthorized system use.

i. Printer Buffers: Two independent buffers shall be supported. Each buffer is assigned a parallel port and a sequence of archived files. A parallel port can be redirected to a serial port thereby allowing dumb terminals or other computers to receive the contents of these buffers in real time.

j. Programmable Logic Controller Linking: Link a symbol or tag to a PLC through menu prompts for tag name, PLC type, station number, data address and scaling quantities.

k. Power Failure Recovery: Return the system to an on-line condition after power interruption with no operator action.

l. Report Generation: Automatically produce reports based on time, interval or event.

m. Scaling: PLC data and measurements shall be converted to engineering units for quick comprehension in commonly-understood terms.

n. Tag Values: Selectable display format of 8 or 12 digits, decimal point, engineering units, sign, decimal or scientific notation and precision.

o. Tagging: For quick comprehension, data points shall be labeled in common English terms rather than machine or computer language.

p. File Format: Interface to spreadsheet via "DIF" file.

2.3.1.4 Software:

Furnish software on non-copy-protected diskettes. Software shall be compatible with the Operator Interface Unit and have communication drivers furnished for interface to the PLC furnished.

2.4 CUSTOM SOFTWARE

The following custom software shall be created, implemented, and furnished to the Owner as a minimum.

2.4.1 Graphic Screens:

2.4.1.1 Indicator colors:

The following colors shall apply to all graphic screens:

a. Red: Motor Off, Valve Closed.

b. Green: Motor On, Valve Open.

c. Yellow: Alarm.

2.4.1.2 Screen 1:

a. Background: Influent Pump Station.

b. Indicators:
1) Lead Pump: "Not Auto"
2) Lead Pump Status: "Run"
3) Lead Pump: "Called-for-not-run"
4) Lag Pump: "Not Auto"
5) Lag Pump: "Run"
6) Lag Pump: "Called-for-not-run"

2.4.1.3 Screen 2:

a. Background: Entrance Works.

b. Indicators:
1) Bar Screen: "Not Auto"
2) Bar Screen Status: "Run"
3) Bar Screen: "Called-for-not-run"

2.4.1.4 Screen 3:

a. Background: SBR #1 and #2

b. Indicators:
1) SBR #1 Mixer: "Not Auto"
2) SBR #1 Status: "Run"
3) SBR #1 Mixer: "Called-For-Not-Run"
4) SBR #1 Decant Valve: "Not-Auto"
5) SBR #1 Influent Valve: "Not-Auto"
6) SBR #1 Air Valve: "Not-Auto"
8) SBR #1 Decant Weir Valve: "Not-Auto"
9) SBR #1 Sludge Pump: "Called-For-Not-Run"
10) SBR #1 Sludge Pump: "Not Auto"
11) SBR #2 Mixer: "Not Auto"
12) SBR #2 Status: "Run"
13) SBR #2 Mixer: "Called-For-Not-Run"
14) SBR #2 Decant Valve: "Not-Auto"
15) SBR #2 Influent Valve: "Not-Auto"
16) SBR #2 Air Valve: "Not-Auto"
18) SBR #2 Decant Weir Valve: "Not-Auto"
19) SBR #2 Sludge Pump: "Called-For-Not-Run"
20) SBR #2 Sludge Pump: "Not Auto"

2.4.1.5 Screen 4:

a. Background: Aerobic Digester

b. Indicators:
1) Aerobic Digester Mixer: "Not Auto"
2) Aerobic Digester Mixer: "Called-For-Not-Run"
3) Aerobic Digester Mixer Status: "Run"
4) Aerobic Digester Sump Pump: "Not Auto"
5) Aerobic Digester Sump Pump: "Called-For-Not-Run"
6) Aerobic Digester Sump Pump Status: "Run"

2.4.1.6 Screen 5:

a. Background: Blower Building and Generator

b. Indicators:

1) East Aerobic Digester Aeration Blower Status: "Run"
2) East Aerobic Digester Aeration Blower: "Called-For-Not-Run"
3) East Aerobic Digester Aeration Blower: "Not Auto"
4) West Aerobic Digester Aeration Blower Status: "Run"
5) West Aerobic Digester Aeration Blower: "Called-For-Not-Run"
6) West Aerobic Digester Aeration Blower: "Not Auto"
7) East SBR Aeration Blower Status: "Run"
8) East SBR Aeration Blower: "Called-For-Not-Run"
9) East SBR Aeration Blower: "Not Auto"
10) Center SBR Aeration Blower Status: "Run"
11) Center SBR Aeration Blower: "Called-For-Not-Run"
12) Center SBR Aeration Blower: "Not Auto"
13) West SBR Aeration Blower Status: "Run"
14) West SBR Aeration Blower: "Called-For-Not-Run"
15) West SBR Aeration Blower: "Not Auto"

2.4.1.7 Screen 6:

a. Background: Chlorinatin/Dechlorination Processes

b. Indicators:

1) East Washwater Pump Status: "Run"
2) East Washwater Pump: "Not Auto"
3) East Washwater Pump" "Called-For-Not-Run"
4) West Washwater Pump Status: "Run"
5) West Washwater Pump: "Not Auto"
6) West Washwater Pump" "Called-For-Not-Run"
7) West Sodium Hypochlorite Pump Status: "Run"
8) West Sodium Hypochlorite Pump: "Not Auto"
9) Center Sodium Hypochlorite Pump Status: "Run"
10) Center Sodium Hypochlorite Pump: "Not Auto"
11) East Sodium Hypochlorite Pump Status: "Run"
12) East Sodium Hypochlorite Pump: "Not Auto"
13) North Sodium Bisufite Pump Status: "Run"
14) North Sodium Bisufite Pump: "Not Auto"
15) South Sodium Bisufite Pump Status: "Run"
16) South Sodium Bisufite Pump: "Not Auto"

2.4.1.8 Screen 7:

a. Background: Chlorine Contact Basin

b. Indicators:

1) Chlorination Mixer Status: "Run"
2) Chlorination Mixer: "Not Auto"
3) Chlorination Mixer: "Called-For-Not-Run"
4) Dechlorination Mixer Status: "Run"
5) Dechlorination Mixer: "Not Auto"
6) Dechlorination Mixer: "Called-For-Not-Run"
7) Chlorine Contact Basin Alarm: "Level High"

2.4.2 Entry Tables:

2.4.2.1 Entry Table 1:

a. Entry Table 1 shall have the following format:

	SBR 1 Mixer		SBR 2 Mixer	
Cycle 1	Start Time: * min	Run Time: 134 min	Start Time: **288 min	Run Time: 134 min.
Cycle 2	Start Time: * min	Run Time: 134 min	Start Time: **288 min	Run Time: 134 min.
Cycle 3	Start Time: * min	Run Time: 134 min	Start Time: **288 min	Run Time: 134 min.
Cycle 4	Start Time: * min	Run Time: 134 min	Start Time: **288 min	Run Time: 134 min.
Cycle 5	Start Time: * min	Run Time: 134 min	Start Time: **288 min	Run Time: 134 min.

	SBR 1 Blower		SBR 2 Blower	
Cycle 1	Start Time: ** min	Run Time: 104 min	Start Time: **+288 min	Run Time: 104 min.
Cycle 2	Start Time: ** min	Run Time: 104 min	Start Time: **+288 min	Run Time: 104 min.
Cycle 3	Start Time: ** min	Run Time: 104 min	Start Time: **+288 min	Run Time: 104 min.
Cycle 4	Start Time: ** min	Run Time: 104 min	Start Time: **+288 min	Run Time: 104 min.
Cycle 5	Start Time: ** min	Run Time: 104 min	Start Time: **+288 min	Run Time: 104 min.

* SBR level 14.56' (45 min after commencing static fill)
** SBR level 15.6'

2.4.3 Archiving:

2.4.3.1 Plant Influent Flow Rate:

a. OIU shall log hourly averages of plant influent flow rate each day for a total of three months.

b. OIU shall average matching days of week and time across three month log (i.e.: average all Monday 8 am readings to get a typical Monday 8am flow rate). Result shall be a Typical Week of hourly flow rates.

c. If PLC receives plant influent flow "Transmitter Failure" alarm, OIU shall match the day of week of the failure with the same day of week in the archived Typical Week records and download that day's remaining hourly flow averages from the archived records into the PLC average flow registers. At midnight, OIU shall download the next day's average flow rates from archived Typical Week records into the PLC. Continue this process until "Transmitter Failure" alarm has been cleared.

2.4.4 Printing:

Print every alarm from each location, with date and time stamp when Operator Interface Software is in "foreground" or "background" mode. Print Last 50 Operations Log on demand, refer to Section 16917 SEQUENCE OF OPERATION.

PART 3 - EXECUTION

3.1 START-UP SERVICES AND SYSTEM DEMONSTRATION

Provide the services of a field service representative of the Programmable Logic Controller System Supplier who is thoroughly familiar with this system. Representative shall assist with field installation problems and with start-up of the PLC system, Operator Interface System, and software. Field installation assistance shall be a minimum two day trip.

Start-up Schedule: Minimum four-day trip, but sufficient time to do all start-up. Start-up includes all plant systems that have input to or output from the PLC, not just the PLC, OIS, and software.

Representative demonstrate to Owner that PC systems, Operator Interface System and all software function as specified. Set levels, timers, etc., to new values as required. Document settings. Service representative shall provide a written report certifying that all equipment is properly installed, fully functional, and ready for use.

3.2 INSTRUCTION TO OWNER'S PERSONNEL

3.2.1 Operator Training:

Two duplicate sessions for operators, each for a minimum of two hours. Demonstrate normal and emergency operations and man-machine interface. Assist operators in actual operations. Demonstrate re-booting of system by exactly following step-by-step instructions included in O&M manual. If required, modify instructions based on demonstration comments and questions.

3.2.2 Maintenance Training:

Two duplicate sessions for maintenance personnel, each for a minimum of four hours. Cover preventive and corrective maintenance, troubleshooting, and testing methods. Assist personnel in performing actual preventive and corrective operations.

3.2.3 Schedule:

Contractor propose for approval.

- - o 0 o - -

SECTION 16902 - ELECTRIC CONTROLS AND RELAYS

PART 1 - GENERAL

1.1 GENERAL REQUIREMENTS

1.2 Standard Product

Material and equipment shall be a standard product of a manufacturer regularly engaged in the manufacture of the product and shall essentially duplicate items that have been in satisfactory use for at least 2 years prior to bid opening. The experience use shall include applications of equipment and materials under similar circumstances and of the same design and rating as the equipment specified. Equipment items shall be capable of being serviced by an organization that is, in the opinion of the Contracting Officer, reasonably convenient to the site.

1.3 SYSTEM DESCRIPTION

If a component is shown on the Drawings but is not fully identified,and it is reasonable to use one of the components below, then submit as such. If no description is applicable, submit a first class product of a reputable manufacturer. Components of certain equipment are specified under the specification for that equipment and shall be supplied as required.

1.4 SUBMITTALS

The following shall be submitted in accordance with Section 01300 - SUBMITTALS:

SD-01, Data

Manufacturer's Catalog Cuts

Duplicate submittals of cuts for different applications are not required.

Full parts list cross-referencing each application to a manufacturer and specific catalog number.

Operation and Maintenance Data

Catalog cuts.

PART 2 - PRODUCTS

2.1 SEALED CONTACT SWITCHES AND PUSHBUTTONS

2.1.1 Contacts:

Hermetically sealed glass reed with NEMA B600 and P300 ratings.

2.1.2 Enclosures, operators, contact blocks, legend plates, engraved nameplates, hardware and accessories:

Corrosion resistant.

2.1.3 Stop Pushbuttons

Lockout type.

2.1.4 Enclosures:

As shown on Drawings.

2.1.4.1 Class I, Division 1, Class I, Division 2, and Process areas:

NEMA 4X.

2.1.4.2 Non-Process Indoor Areas:

NEMA 12.

2.1.5 Operators:

NEMA 4X where mounted in NEMA 4X enclosures; NEMA 13 where mounted in NEMA 12 enclosures or control panels.

2.2 SWITCHES AND PUSHBUTTONS - CONVENTIONAL

2.2.1 Contacts:

Double-break silver with NEMA A600 and P600 ratings.

2.2.2 Stop pushbuttons:

Lockout type.

2.2.3 Enclosures:

As shown on Drawings.

2.2.3.1 Class I, Division 1 and Class I, Division 2 areas:

Copper-free, cast aluminum, NEMA 7.

2.2.3.2 Process areas:

NEMA 4X.

2.2.3.3 Non-Process Indoor areas:

NEMA 12.

2.2.4 Operators:

NEMA 7 where mounted in NEMA 7 enclosures. NEMA 4X where mounted in NEMA 4X enclosures. NEMA 12 where mounted in NEMA 12 enclosures.

2.3 SEALED CONTACT RELAYS

Industrial type, electrically held with coil voltage as shown on Drawings. Contacts shall be hermetically sealed in a glass envelope mounted in interchangeable plastic cartridge. Conversion: NO to NC or NC to NO. Minimum contact rating shall be 15A make, 3A break, 5A continuous at 120VAC. Contact arrangement shall be as shown on Drawings, but minimum of one NO per relay, expandable to 4 contacts per relay. Mounting strip shall have captive screws for securing relay. Surge suppressor shall be designed for use with DC relays supplied.

2.4 600V CONTROL RELAYS

Industrial type. Contacts shall be field convertible by inverting plug-in contact module with captive terminal clamp screws. Minimum contact rating shall be 7200 VA make, 720 VA break, 10A continuous. Contact arrangements shall be as shown on the Drawings.

2.5 PLUG-IN CONTROL RELAYS

Relay in plug-in case with clear polycarbonate cover. Contacts rated 10A, 120VAC, nominal. Coils draw: Maximum 6VA on AC or DC. Coil voltage: 120VAC or as shown on the Drawings and available for 24, 115, and 230VAC and 12, 24, 48, 125VDC. Ambient operating temperature: 0 degrees to 50 degrees C. Mechanical life expectancy: 20,000,000 operations. Contacts shall be 4PDT. Socket shall have high pressure plated contacts. Wiring shall be front accessible, screw connected. It shall not be possible to insert the relay in the socket with the relay improperly oriented. The relay shall be positively retained in the socket in any mounting position without the use of spring or clip over the top of the relay. Where called for on Drawings for DC relays, provide 200 PRV 2A diodes across coils for surge suppression.

2.6 SOLID-STATE ALTERNATOR RELAY

2.6.1 Control power:

120VAC, 0.5 watts.

2.6.2 Transient protection:

2500V RMS for 10 mS.

2.6.3 Output contacts:

4 SPST. 240VA at 120VAC or 28VDC.

2.6.4 Input contact:

1 mA at 12VDC.

2.6.5 Operation:

Field adjustable for operation of one pump or alternation of 2, 3, or4 pumps.

2.6.6 Ambient temperature:

Minus 40 to plus 60 degrees C.

2.6.7 TimeMark Corporation Model 471, or Engineer approved equivalent.

2.7 PLUG-IN SEQUENCING RELAYS

Relay in plug-in case with clear polycarbonate cover. Contacts: DPDT, rated 5A, 120VAC or 24VDC. Coil Voltage: 120VAC or as shown on the drawings and available for 24, 115, 230VAC and 12, 24, 48, 125VDC. Ambient operating temperature range: -10 degrees to 60 degrees C. Mechanical Life Expectancy: 5 million mechanical operations. Contacts to transfer on each impulse. Models to be available with contacts transferring either when the coil is energized or when the coil is de-energized. Socket to have high pressure plated contacts. Wiring: front acces-sible, screw connected. It shall not be possible to insert the relay in the socket with the relay improperly oriented. The relay shall be positively retained in the socket in any mounting position without the use of spring or clip over the top of the relay.

2.8 PHOTOCELLS

2.8.1 Base:

Molded phenolic, 3 inch skirt.

2.8.2 Dome:

Aluminum color (unpainted) translucent tenite butyrate.

2.8.3 Contacts:

NC, 1500 W.

2.8.4 Cadmium Sulfide Cell:

1 inch diameter hermetically sealed glass to steel, dissipation power greater than twice demand.

2.8.5 Surge Protection:

60 degrees C. sparkover - 1500V rms. Critical impulse sparkover: voltage discharge: 10,000A, 1-1/2 to 40 ms wave 2,000V.

2.8.6 Time Delay:

15 seconds or more.

2.8.7 Temperature Range:

Minus 50 to plus 60 degrees C.

2.8.8 Operational Level:

Factory preset for 3 footcandles. ON/OFF ratio: 1:2.

2.8.9 Low profile.

PART 3 - EXECUTION

3.1 MOUNTING AND MARKING

3.1.1 Switches and Pilot Lights:

a. On control panel where shown on detail.

b. On wall if sufficiently close to controlled equipment or control point.

c. On unistrut bolted to floor or bolted to side of pump base.

d. Location subject to approval of Engineer.

e. Support enclosure independent of conduit.

3.1.2 Relays:

Furnished engraved nameplate on top of or adjacent to each relay to identify its function as shown on the schematics.

3.1.3 Photocells:

As shown on Drawings.

3.2 SURGE SUPPRESSOR

Install one on each 24VDC relay coil. Suppressors are not shown on the Drawings.

- - o O o - -

SECTION 16903 - PROGRAMMABLE LOGIC CONTROLLER SYSTEMS

PART 1 - GENERAL

1.1 GENERAL REQUIREMENTS

1.1.1 Standard Product

Material and equipment shall be a standard product of a manufacturer regularly engaged in the manufacture of the product and shall essentially duplicate items that have been in satisfactory use for at least 2 years prior to bid opening. The experience use shall include applications of equipment and materials under similar circumstances and of the same design and rating as the equipment specified. Equipment items shall be capable of being serviced by an organization that is, in the opinion of the Contracting Officer, reasonably convenient to the site.

Complete PLC system shall operate at 60 degrees C ambient.

1.2 SYSTEM DESCRIPTION

Contractor will furnish a complete Programmable Logic Controller with a Main I/O (PLC) and a Sequencing Batch Reactor (SBR) PLC located in the Blower Building electrical room. A single enclosure will house the SBR processor and associated I/O and the Main processor and its associated I/O that will be used for all other functions of the plant. The SBR processor will communicate I/O information to the main PLC for use in the Operator Interface Unit.
The SBR manufacturer will provide all information for Operator Interface to the Controls Contractor two weeks after award of the project. The SBR manufacturer will provide to the Controls Contractor the processor and I/O requirements, the programming taglist, and all pertinent information for the SBR system and the Controls Contractor will supply and integrate this equipment into the PLC enclosure. This system also includes the communication links between the processors as well as the link to the Operator Interface Unit located in the Administration Building.
Supply complete, integrated system that functions properly from the standpoint of the PLC system hardware and software, as well as interfaces properly with the Operator Interface Unit hardware and software, and with other equipment.

Provide identical processors for each processor described above. Provide identical cards for each type of input and output card required by system. The SBR manufacturer will be required to provide software for either an Allen-Bradley or Siemens PLC. Therefore the Controls Contractor will standardize on one of these types of PLC's and coordinate the system.

PART 2 PRODUCTS refers to Allen-Bradley components. Other manufacturer's may be accepted providing proposed system complies with 1.2 and is approved by the ENGINEER.

Provide a PLC register for each time delay, analog setting, and all other setpoints described in Section 16745 required for Operator interface.

Provide all programming of all PLCs, as required by Section 16917.

1.3 SUBMITTALS

The following shall be submitted in accordance with Section 01300 - SUBMITTALS:

SD-01, Data

Manufacturer's complete catalog cuts.

Software

Furnish software submittal to ENGINEER after approval of Hardware Submittal, but before submission of Operation and Maintenance Data.

Tables showing all PLC inputs and outputs.

PLC ladder diagrams.

Operation and Maintenance Data

Record version (updated to reflect installed condition) PLC ladder diagram, fully annotated to relate coil numbers and other addresses to real world and internal functions.

Tables showing all PLC inputs and outputs, updated to reflect actual construction.

Register list:

Include each register that is used as an input, output, timer preset, timer accumulator, analog value, analog set point, alarm point, time of day, date, etc. List registers in left column, then description of use, then start-up setting (if any), then limits (if any).

PLC Operator's Manuals and Repair Manuals.

One original and one copy of PLC Programmer's Manual. Complete, concise, written, step-by-step instructions for reloading each PLC ladder program. Assume CPU memory has been erased.

1.4 EXTRA MATERIALS

One of each type of input and output card used in system, except analog input.

One fiber network link module.

PART 2 - PRODUCTS

2.1 8K RAM PROCESSORS

2.1.1 Environmental:

0 to 60 degrees C., 5 to 95 percent relative humidity, non-condensing.

2.1.2 I/O points:

Up to 4,000.

2.1.3 Memory:

8K RAM, minimum. If larger capacity required to implement control algorithms described in Section 16917, provide larger processor at no additional charge to OWNER.

2.1.4 Memory backup:

Self-contained battery for up to 1 year.

2.1.5 Real-time clock.

2.1.6 Processor functions:

a. Contacts.

b. Coils.

c. Internal relays.

d. Latch/unlatch relays.

e. Transitional coils.

f. Master control relays.

g. Timers: Range 0 to 9999, time bases 0.01 second, 0.1 second, o.1 minute.

h. Counters: 0 to 9999, up, down, and up/down.

i. Drum sequencer.

j. Bit shift register.

k. FIFO load.

l. Data comparisons: Equal to, not equal to, greater than or equal to, and less than.

m. Data transfer.

n. Binary to BCD, BCD to binary conversions.

o. Add, subtract, multiply, divide, square root, and absolute value.

p. Floating point math.

q. Sine, cosine.

r. Logarithms.

s. Advanced math and trig operations.

t. Statistical operations.

u. PID computations.

v. Accumulator manipulations.

w. ASCII input/output capabilities.

x. AND, OR, and XOR functions.

y. Random number generator.

z. Scan control: GOTO, subroutine, and timed interrupt capabilities.

aa. Matrix and array manipulation.

bb. Immediate I/O and communication update.

2.1.7 Scan speed:

2.9 milliseconds per K of memory.

2.1.8 Key-operated mode selector switch with Disable Outputs, Halt, Run, and Run/Program switch positions.

2.1.9 Self-diagnostics:

Module LED indicators: Run, Halt, Memory, Force, I/O, Write Protect, and Battery Low.

2.1.10 Communication:

Two RS-422 ports.

2.2 POWER SUPPLIES

2.2.1 12A External Power Supplies:

2.2.1.1 Electrical:

a. Input voltage: 120VAC.

b. Output voltage: 5VDC.

c. Output current: 12A at 40 degrees C., 7A at 60 degrees C.

2.2.1.2 Protection:

Overvoltage, overcurrent

2.2.1.3 Self-diagnostics, module LED indicators:

Battery Low, and DC OK.

2.2.2 21A External Power Supplies:

2.2.2.1 Electrical:

a. Input voltage: 120VAC.

b. Output voltage: 5VDC.

c. Output current: 23A at 40 degrees C., 17.4A at 60 degrees C.

2.2.2.2 Protection:

Overvoltage, overcurrent.

2.2.2.3 Self-diagnostics, module LED indicators:

Battery Low, DC OK, and overvoltage.

2.3 COMMUNICATION MODULES

2.3.1 Local Interface Modules:

2.3.1.1 I/O points:

512.

2.3.1.2 Communication:

Two channels.

2.3.1.3 Self-diagnostics, module LED indicators:

Run, Halt, and Error for each communication channel and Module Error.

2.3.1.4 Module shall be compatible with Remote Interface Module.

2.3.2 Remote Interface Modules:

2.3.2.1 Self-diagnostics, module LED indicators:

Run, Halt, Channel Error, I/O Error, and Module Error.

2.3.2.2 Module shall be compatible with Local Interface Module.

2.3.3 Fiber Optic Interface Modules:

2.3.3.1 Module shall convert processor differential RS-422 communication to optical communication.

2.3.3.2 Distance between Fiber Optic Interface Modules:

5 miles, maximum.

2.4 LOCAL AREA NETWORK MODULES

2.4.1 Network Interface Module:

2.4.1.1 Network protocol:

HDLC.

2.4.1.2 Communications:

Two serial ports.

2.4.1.3 Baud rate:

User selectable.

2.4.1.4 Application mode:

User selectable between Sy/Max devices and ASCII devices.

2.4.1.5 Self-diagnostics:

Module LED indicators: Received Data and Transmitted Data for each communication port, Network Activity, Network Receive Error, Network Transmission Error, and Power.

2.4.1.6 Module shall be compatible with Remote Network Interface Modules.

2.4.2 Network Interface Module:

2.4.2.1 Communications:

Two RS-422 ports

2.4.2.2 Application mode:

User selectable between Model 50 processors, Sy/Max devices, and network devices.

2.4.2.3 Self-diagnostics:

Module LED indicators: Received Data and Transmitted Data for each communication port, Network Activity, Network Receive Error, Network Transmission Error, and Power.

2.4.2.4 Module shall be compatible with Remote Network Interface Units.

2.4.3 Remote Network Interface Module:

2.4.3.1 Network protocol:

HDLC.

2.4.3.2 Communications:

Two ports.

2.4.3.3 Self-diagnostics:

Module LED indicators: Received Data and Transmitted Data for each communication port, Network Activity, Network Receive Error, Network Transmission Error, and Power.

2.4.3.4 Module shall be compatible with Network Interface Module.

2.4.4 Remote Network Interface Units:

2.4.4.1 Electrical:

0 to 60 degrees C., 30 to 95 percent relative humidity, non-condensing

2.4.4.2 Voltage:

12VDC, plus or minus 10 percent. Supplied by Model 50 processor.

2.4.4.3 Communications:

One connector for Model 50 processor, one terminal strip for radio

2.4.4.4 Self-diagnostics:

Module LED indicators: Network activity

2.4.4.5 Module shall be compatible with Network Interface Module.

2.5 CONVERTER MODULES

Dual Interface Converter Module: Module shall convert from RS-422 communications to RS-232 communications.

2.6 LOW DENSITY AC DIGITAL INPUT MODULES

2.6.1 Inputs per module:

Eight.

2.6.2 Electrical:

85 to 132VAC.

2.6.3 Module LED indicators:

Status indicators for each input.

2.7 HIGH DENSITY AC DIGITAL INPUT MODULES

2.7.1 Inputs per module:

Sixteen.

2.7.2 Electrical:

90 to 138VAC.

2.7.3 Module LED indicators:

Status indicators for each input.

2.8 HIGH DENSITY DC DIGITAL INPUT MODULES

2.8.1 Inputs per module:

Sixteen.

2.8.2 Electrical:

10 to 30VDC.

2.8.3 Module LED indicators:

Status indicators for each input.

2.9 SINGLE ANALOG INPUT MODULES

2.9.1 Inputs per module:

One.

2.9.2 External input voltage:

21.6 to 26.4VDC.

2.9.3 Input current:

4 to 20mA.

2.9.4 Resolution:

8 bits.

2.9.5 Accuracy:

Plus or minus 1 percent of full scale.

2.10 LOW DENSITY ANALOG INPUT MODULES

2.10.1 Inputs per module:

Four.

2.10.2 Input voltage:

Selectable from 1 to 5VDC, 0 to 10VDC, or minus 10 to plus 10VDC.

2.10.3 Input current:

4 to 20mA.

2.10.4 Resolution:

1 part in 2,000

2.10.5 Accuracy:

Plus or minus 0.5 percent.

2.10.6 Automatic calibration of zero and span.

2.10.7 Real time sampling.

2.10.8 Module LED indicators:

Run.

2.11 HIGH DENSITY ANALOG INPUT MODULES

2.11.1 Inputs per module:

Sixteen.

2.11.2 Input voltage:

Selectable from 0 to 5VDC, 1 to 5VDC, 0 to 10VDC, minus 5 to plus 5VDC, or minus 10 to plus 10VDC.

2.11.3 Input current:

Selectable from 0 to 20mA or 4 to 20mA.

2.11.4 Resolution:

3-1/2 digits.

2.11.5 Accuracy:

Plus or minus 0.5 percent.

2.11.6 Automatic calibration of zero and span.

2.11.7 Real time sampling.

2.11.8 Module LED indicators:

Run.

2.12 HIGH DENSITY DIGITAL OUTPUT MODULES

2.12.1 Outputs per module:

Thirty-two.

2.12.2 Electrical:

21 to 29VDC.

2.12.3 Module LED indicators:

Status indicators for each output.

2.13 LOW DENSITY RELAY OUTPUT MODULES

2.13.1 Outputs per module:

8 independent, normally open.

2.13.2 Voltage rating:

120VAC.

2.13.3 Current rating:

4.5A.

2.13.4 Module LED indicators:

Status indicators for each output.

2.14 HIGH DENSITY RELAY OUTPUT MODULES

2.14.1 Outputs per module:

16 isolated, individually fused.

2.14.2 Electrical:

0 to 60 degrees C., 5 to 95 percent humidity, non-condensing.

2.14.3 Isolation rating:

2500VAC rms.

2.14.4 Output fuse:

2.5A.

2.14.5 Voltage ratings:

240VAC, 120VDC maximum output.

2.14.6 Maximum switching load per output:

a. 5 to 130VAC, 5 to 30VDC: 2A.

b. 131 to 240VAC: 1A.

c. 31 to 60VDC: 0.4A.

d. 61 to 120VDC: 0.1A.

2.14.7 Module LED indicators:

Status indicators for each output.

2.15 ANALOG OUTPUT MODULES

2.15.1 Outputs per module:

Four.

2.15.2 Output voltage:

Selectable from 1 to 5VDC, 0 to 10VDC, or minus 10 to plus 10VDC.

2.15.3 Output current:

4 to 20mA.

2.15.4 Module LED indicators:

Run.

2.16 FIBER NETWORK LINKS

2.16.1 Electrical:

90 to 127VAC, 0 to 60 degrees C.

2.16.2 Power consumption:

Less than 5W.

2.16.3 Data rate:

500 Kbaud.

2.16.4 Optical Attenuation:

22 dB, maximum.

2.16.5 Output power:

60 microWatts, minimum.

2.16.6 Receiver sensitivity:

400 nanoWatts.

2.16.7 Pulse width distortion:

Less than 50 nanoseconds.

2.16.8 Indicators:

Transmit and Receive.

2.16.9 Connectors:

2.16.9.1 Fiber optic:

SMA compatible.

2.16.9.2 Data, power:

Screw terminals.

2.16.10 Mounting:

Keyhole slots.

2.16.11 Distance between Fiber Network Modules:

10,000 feet, maximum.

2.17 LADDER PROGRAMMING SOFTWARE AND INTERFACE EQUIPMENT

Provide ladder software for programming each type of processor. Provide capability to program all of the functions required under paragraph PROCESSOR FUNCTIONS and all functions required to implement software required in Section 16917 SEQUENCE OF OPERATION. Provide complete documentation and printing capabilities:

a. Cross reference to show location of each occurrence of contacts, timers, coils, registers, etc., in ladder.

b. Print all registers and their use in the system.

c. Add annotation anywhere in ladder and print well formatted ladder with annotation.

d. Other features needed to produce custom software required in Section 16917 SEQUENCE OF OPERATION and for complete annotation and tables.

Provide ability to search listing for all types of elements and perform inserts, deletes, replacements, and similar editing functions. Software shall run properly on Operator Interface Unit (OIU) provided in Section 16745 OPERATOR INTERFACE SYSTEMS.

Furnish one copy of complete, original manufacturer's documentation for ladder software. Furnish one complete set of ladder software on OIU hard disk. Ladder software and its documentation may be furnished with the Project Record Documents.

2.17.1 Interface Board

If the ladder programming software furnished requires an interface or other special board in the OIU other than a standard series or parallel port in order to properly communicate with and interface with the PLC furnished, then furnish one such board.

Provide communications port in PLC for connection of OIU. Provide cable for connection between PLC and OIU.

2.18 FACTORY TEST

CONTRACTOR shall perform a factory test on complete control system including control, operator interface and telemetry systems prior to field installation of system.

2.18.1 Factory test:

Test complete hardware system. Verify all system inputs and outputs, control hardware and telemetry hardware function properly. Test all software, especially alarm and abnormal conditions. Verify all software functions as described in Section 16745 OPERATOR INTERFACE SYSTEM and Section 16917 SEQUENCE OF OPERATION. Record test results and provide two (2) copies to Contracting Officer at least two weeks prior to System Test.

PART 3 - EXECUTION

3.1 INSTALLATION

Install Programmable Logic Controllers in Control Panels as shown on Drawings. The enclosure shown on the Drawings will house both the Main PLC and the SBR PLC. The enclosure will be provided by the SBR manufacturer

3.2 TESTS

Demonstrate proper operation of complete hardware system.

3.3 MANUFACTURER'S FIELD SERVICE

Furnish the services of a Field Service Representative for a minimum of two full days for final field connections, system start-up, and sequence modifications.

3.3.1 Operator Training:

Demonstrate reloading of PLC program by exactly following step-by-step instructions in O&M manual. If required, modify instructions based on demonstration comments and questions.

- - o O o - -

SECTION 16904 - LIQUID LEVEL SENSORS

PART 1 - GENERAL

1.1 GENERAL REQUIREMENTS

1.1.1 Standard Product

Material and equipment shall be a standard product of a manufacturer regularly engaged in the manufacture of the product and shall essentially duplicate items that have been in satisfactory use for at least 2 years prior to bid opening. The experience use shall include applications of equipment and materials under similar circumstances and of the same design and rating as the equipment specified. Equipment items shall be capable of being serviced by an organization that is, in the opinion of the Contracting Officer, reasonably convenient to the site.

1.2 SUBMITTALS

The following shall be submitted in accordance with Section 01300 - SUBMITTALS:

SD-01, Data

Manufacturer's literature.

Dimension drawings.

Operation and Maintenance Data

Copies of final corrected submittals including:

Manufacturer's literature
Dimension drawings
Manufacturer's complete operation and maintenance manuals.

PART 2 - PRODUCTS

2.1 FLOAT SWITCHES

2.1.1 Switch:

SPDT, 8A 250VAC mercury in eccentrically weighted hermetically sealed pear-shaped float with plastic jacketed cable.

2.1.2 Operating Point Rising:

30 degrees from vertical.

2.1.3 Operating Point Descending:

10 degrees from vertical.

2.1.4 Maximum angular displacement fully immersed:

60 degrees from vertical.

2.1.5 Switch shall not float.

2.2 LEVEL PROBES

2.2.1 Control Relay:

Induction type relay designed to operate on 115 VAC primary voltage. Secondary coil voltage shall be as scheduled. All coils precision wound. Insulation blocks of thermosetting plastic. Double break contacts made of silver alloy. Contacts rated at 1 HP, single phase, 115VAC or 230VAC or standard duty pilot rating up to 600VAC. Contact arrangement as shown on Drawings. Enclosure shall be as schedule.

2.2.2 Electrode Holder:

Pressure tight electrode holder, external pipe threaded, outdoor, watertight, and heavy duty. Holder and pipe thread shall mate with pipe fitting provided on tanks or vessels. Holder material shall be as scheduled. Temperature rating shall be 200 degrees F. Pressure rating: Brass, cast iron: 50 psi; Type 316 Stainless Steel: 2,000 psi. Holder shall have mounting provisions for minimum of scheduled number of electrodes. Holder shall have watertight protection for the conduit or cable entrance.

2.2.3 Electrode Plugs:

One pressure tight electrode plug shall be provided for each electrode. Electrode plug shall be of stainless steel construction with ceramic and gloss insulation. Electrode plug construction materials shall be compatible with scheduled electrode holder material.

2.2.4 Electrode Wire Connector:

Wire Suspension Electrodes: Each electrode shall be fitted with a wire connector.

2.2.5 Electrodes:

As scheduled. Length of electrodes: As scheduled or as shown on Drawings. Confirm lengths with Contracting Officer prior to field cutting.

PART 3 - EXECUTION

3.1 INSTALLATION

Install liquid level sensors as shown on Drawings and in accordance with manufacturer's recommendations.

3.1.1 Float Switches:

Set level as scheduled, as shown on Drawings, or as directed by ENGINEER in field. Conduit sizes for float cables are based on a maximum of 0.38 inch outside diameter cable. Increase conduit size if required for larger cable.

3.2 SCHEDULE

3.2.1 Liquid level sensors required for this project: 2.1.

3.2.2 Level Switches:

3.2.2.1 LSH-200A; Set switch level at 18'.

3.2.2.2 LSH-200B; Set switch level at 15.6'.

3.2.2.3 LSH-200C; Set switch level at 13'.

3.2.2.4 LSL-280; Set swtich level at 18'.

3.2.2.5 LSL-280B; Set switch level at 15.6'.

3.2.2.6 LSLL-280C; Set switch level at 13'.

3.2.2.7 LSHH-300; Set switch level at 18'.

3.2.2.8 LSLL-300; Set switch level at 1'.

- - o O o - -

SECTION 16905 - FLOW SWITCHES

PART 1 - GENERAL

1.1 GENERAL REQUIREMENTS

1.1.1 Standard Product

Material and equipment shall be a standard product of a manufacturer regularly engaged in the manufacture of the product and shall essentially duplicate items that have been in satisfactory use for at least 2 years prior to bid opening. The experience use shall include applications of equipment and materials under similar circumstances and of the same design and rating as the equipment specified. Equipment items shall be capable of being serviced by an organization that is, in the opinion of the Contracting Officer, reasonably convenient to the site.

1.2 SUBMITTALS

The following shall be submitted in accordance with Section 01300 - SUBMITTALS:

SD-01, Data

Complete manufacturer's catalog cuts.

PART 2 - PRODUCTS

2.1 THERMAL DISPERSION FLOW SWITCHES

2.1.1 Probe Element:

Type 316 stainless steel probe assembly.

2.1.2 Maximum Operating Pressure:

150 psig, 250 degrees F.

2.1.3 Maximum Flow:

Approximately 280 gpm.

2.1.4 Contacts:

DPDT, 2A at 24 VAC.

2.1.5 Wetted surfaces:

Type 316 stainless steel with Nickel-base braze.

2.1.6 Complete assembly with 2" full port ball valve.

2.2 DIFFERENTIAL PRESSURE TYPE FLOW SWITCHES

2.2.1 Rated pressure:

300 psig applied to one or both ports. Differential equal to rated pressure shall not damage gage or switch.

2.2.2 Ambient temperature rating:

Minus 65 degrees F. to plus 200 degrees F.

2.2.3 Gage:

4.5 inch diameter face. Accuracy of plus or minus 2 percent of full scale at 70 degrees F.

2.2.4 Switch output:

SPDT reed contact, magnetically linked to the pressure sensing element. Provide one SPDT reed contact except provide 2 where scheduled.

2.2.4.1 Set point:

Field adjustable from 5 percent to 95 percent of the scale range.

2.2.4.2 Repeat accuracy:

One percent of full scale.

2.2.4.3 On-Off switching differential:

Five percent of full scale.

2.2.4.4 Electrical rating:

0.25A, 4W at 200VAC, continuous.

2.2.5 Relay output:

Provide where scheduled. Driven by switch output. Electrical rating: 10A, 1000W or 1/2 HP at 120VAC, continuous.

2.2.6 Materials of construction:

2.2.6.1 Body:

40 percent glass-filled polysulfone.

2.2.6.2 Seals and diaphragm:

Buna N.

2.2.6.3 Magnet:

Ceramic.

2.2.6.4 Guide bushings:

Acetal.

2.2.6.5 Internal metal parts:

Type 316 stainless steel.

2.2.6.6 Pressure connections:

Type 316 stainless steel, 1/4 inch FNPT.

2.2.7 Scale range:

0 to 25 inches water column except where scheduled otherwise.

2.2.8 Enclosure:

a. NEMA 1.

b. NEMA 4X with clear cover where scheduled.

c. Cast aluminum with viewing window, rated NEMA 7 and NEMA 9 where scheduled.

2.3 PROBE TYPE FLOW SWITCHES

2.3.1 Control Relay:

Induction type relay designed to operate on 115VAC primary voltage. Secondary coil voltage as scheduled. All coils precision wound. Insulation blocks of thermosetting plastic. Double break contacts made of silver alloy. Contacts rated at 1 HP, single phase, 115VAC or 230VAC or standard duty pilot rating up to 600VAC. Contact arrangement as shown on Drawings. Enclosure as scheduled.

2.3.2 Electrode Holder:

Pressure tight electrode, external pipe threaded, outdoor, watertight, and heavy duty. Holder and pipe thread shall mate with pipe fitting provided on tanks or vessels. Holder material as scheduled. Temperature rating shall be 200 degrees F. Pressure Rating: Brass, cast iron: 500 psi; Type 316 Stainless Steel: 2,000 psi. Holder shall have mounting provisions for one electrode. Holder shall have watertight protection for the conduit or cable entrance.

2.3.3 Electrode Plug:

Electrode plug shall be of stainless steel construction with ceramic and glass insulation. Electrode plug construction materials shall be compatible with scheduled electrode holder material.

2.3.4 Electrode:

Solid rod. Length of electrode: As scheduled or as shown on Drawings. Confirm lengths with Contracting Officer prior to field cutting.

PART 3 - EXECUTION

3.1 INSTALLATION

Install flow switches as shown on Drawings and in accordance with manufacturer's recommendations.

3.2 SCHEDULE

3.2.1 Flow switches required: 2.1.

3.2.2 Flow Switch FS - 410.

- - o O o - -

SECTION 16906 - PRESSURE SWITCHES

PART 1 - GENERAL

1.1 GENERAL REQUIREMENTS

1.1.1 Standard Product

Material and equipment shall be a standard product of a manufacturer regularly engaged in the manufacture of the product and shall essentially duplicate items that have been in satisfactory use for at least 2 years prior to bid opening. The experience use shall include applications of equipment and materials under similar circumstances and of the same design and rating as the switches specified. Equipment items shall be capable of being serviced by an organization that is, in the opinion of the Contracting Officer, reasonably convenient to the site.

1.2 SUBMITTALS

The following shall be submitted in accordance with Section 01300 - SUBMITTALS:

SD-01, Data

Complete manufacturer's catalog cuts.

Instrument specification data forms completed by Contractor and to include all pertinent data for each instrument.

PART 2 - PRODUCTS

2.1 PRESSURE SWITCHES

2.1.1 Differential:

Fully adjustable over operating range.

2.1.2 Adjustments:

Individual external high and low pressure operating point adjustments.

2.1.3 Enclosure:

NEMA 1 with visible operation unless scheduled otherwise.

2.1.4 Bourdon tube:

Brass, unless scheduled otherwise.

2.1.5 Switch:

Mercury tube.

2.1.6 Contacts:

SPDT rated 4A at 120VAC.

2.1.7 Operating range:

As scheduled.

2.1.8 Mercoid Corporation Series D or equivalent.

PART 3 - EXECUTION

3.1 INSTALLATION

Install pressure switches as shown on Drawings and in accordance with manufacturer's recommendations.

- - o O o - -

SECTION 16911 - CONTROL PANELS

PART 1 - GENERAL

1.1 GENERAL REQUIREMENTS

1.1.1 Standard Product

Material and equipment shall be a standard product of a manufacturer regularly engaged in the manufacture of the product and shall essentially duplicate items that have been in satisfactory use for at least 2 years prior to bid opening. The experience use shall include applications of equipment and materials under similar circumstances and of the same design and rating as the equipment specified. Equipment items shall be capable of being serviced by an organization that is, in the opinion of the Contracting Officer, reasonably convenient to the site.

1.2 SUBMITTALS

The following shall be submitted in accordance with Section 01300 - SUBMITTALS:

SD-01, Data

Manufacturer's standard literature for all control devices, panel front devices, indicators, terminal boards, etc.

Dimensioned front views showing devices, legend plates, and nameplates.

Dimensioned interior views showing components (relays, timers, contactors, etc.), terminal boards, and nameplates.

Back views of doors showing switches, pilots, etc., and nameplates.

Engraving list for legend plates and nameplates.

Internal connection diagrams.

SD-04, Drawings

Schematic Drawings.

Schematic drawings shall be required for all electrically controlled systems and equipment included in this contract whether or not control schematics for the equipment have been shown on construction drawings.

Equipment for which schematics shall be required include, but is not limited to, pump motor controls, valve motor operators, lighting controls, environmental control equipment, and other equipment with packaged controls.

This set of schematic drawings requires coordination of all submittals containing electrical control information.

Schematics for equipment with packaged control systems may not be shown in construction drawings. CONTRACTOR shall be required to obtain schematics from suppliers of all such equipment and coordinate with drawings required by this section.

Text height for full-size schematic drawings shall be 1/8 inch, minimum.

Loop diagrams for all electrical instrumentation systems included in this contract.

Drawings size shall be 24 inches by 36 inches.

Drawing format shall be the same as for loop diagrams provided by ENGINEER in this contract.

Label all terminal blocks and terminal points.

Identify terminal blocks by mnemonic label that represents control panel and by loop number (i.e., ICP-7101).

Identify terminal points with letter/number combination that identifies field instrument.

Text height for full-size loop diagrams shall be 1/8 inch, minimum.

Operation and Maintenance Data.

Corrected, final, "record" submittals including:

Manufacturer's standard literature for all control devices, panel front devices, indicators, terminal boards, etc.

Dimensioned front views showing devices, legend plates, and nameplates.

Dimensioned interior views showing components (relays, timers, contactors, etc.), terminal boards, and nameplates.

Back views of doors showing switches, pilots, etc., and nameplates.

Engraving list for legend plates and nameplates.

Folded blue-line copies of:

a. Internal connection diagrams.
b. External connection diagrams.
c. Schematic diagrams.
d. Loop diagrams.

1.3 PROJECT RECORD DOCUMENTS

1.3.1 Reversed mylar sepias of field corrected and factory drafted:

1.3.1.1 Internal connection diagrams.

1.3.1.2 External connection diagrams:

a. Combine with internal connection diagrams.

b. Schematic diagrams.

c. Loop diagrams.

1.4 EXTRA MATERIALS

1.4.1 Fuses: 10 percent of furnished, 10 minimum.

1.4.2 Lamps: 20 percent of furnished, 30 minimum.

1.4.3 Relays: 2 of each type.

PART 2 - PRODUCTS

2.1 ENCLOSURE

As scheduled, as shown on Drawings, or as individual sections.

2.2 CABINET COOLERS

Where scheduled, install at least one (or more, if required) cabinet cooler which utilizes a heat-pipe design and two fans in order to preserve the NEMA rating of the cabinet and sized to dissipate waste heat produced in the cabinet for a maximum 36 degree F rise over scheduled ambient.

2.3 BUS BAR

Provide copper bus bar, totally insulated from enclosure and all other grounds. Connect DC instrumentation cable shields to bus bar. Connect bus bar to isolated ground shown on Drawings.

2.4 PANEL ALARM HORN

Provide steady-tone piezoelectric alarm horn in control panels as shown on Drawings.

2.5 SWITCHES, PUSHBUTTONS, PILOT LIGHTS

As specified in Section 16902 ELECTRIC CONTROLS AND RELAYS

2.6 RECORDERS, INDICATORS

As specified in Section 16942 RECORDING AND INDICATING DEVICES

2.7 LEGEND PLATES

Provide for switches, pushbuttons, and pilot lights as required on the Drawings.

2.8 CONTROL COMPONENTS

As specified in Section 16902 ELECTRIC CONTROLS AND RELAYS and as shown on Drawings.

2.9 NAMEPLATES

2.9.1 Furnish the following nameplates (NP): As shown on Drawings.

2.9.1.1 Main NP:

Black with 1/2" white letters. Text as on Drawings.

2.9.1.2 Component and device NP (internal):

Adjacent to each terminal board, switch, pushbutton, pilot light, control component, and the like. Black with 1/8" white letters. Text shall be same as on schematic.

2.9.1.3 Warning NP:

On panel front. Red with 1/4" white letters. Text shall read: WARNING. THERE MAY BE POTENTIAL IN THIS PANEL FROM MORE THAN ONE SOURCE.

2.9.1.4 Panel front indicating and display devices:

Provide for each panel front mounted meter, recorder, and the like. Black with 1/4" white letters. Text shall be same as on Drawings.

2.10 WIRING

2.10.1 Color Coding:

a. Neutral: white. Ground: green.

b. 480V phases: brown, orange, yellow (A,B,C, respectively).

c. 120/240V that is controlled by the panel: black, blue.

d. 120/208V that is controlled by the panel: black, blue, violet (A,B,C, respectively).

2.10.2 120V that is used in control circuits:

Where derived from a control power transformer in the panel whose primary is disconnected by an overcurrent device handle on the panel that is interlocked with the door: red. Foreign source: yellow.

2.10.3 24VDC:

TWSH as required and shown on Drawings.

Provide plug-in strips with integral circuit breakers for AC power to all devices requiring AC power where such devices are furnished with a line cord and plug by the manufacturer of the device. For other AC power, route wire such that removing a device does not interrupt HOT or NEUTRAL to any other device. No splices. All field connections to panels shall be to terminal boards, not to devices. Provide 25 percent spare terminals. Label each terminal board. Mark each terminal board (TB) point. Use numbering as shown on Drawings. Where not shown on Drawings, assign a logical number, submit to Contracting Officer for review. All numbering shall be shown on submittals.

2.10.4 Mark each wire end as follows. Show all wire numbering on submittals:

2.10.4.1 Control conductors associated with MCC:

Mark each conductor with tag number appended with MCC terminal point (i.e., M7101-X2).

2.10.4.2 Control conductors not associated with MCC:

Mark each conductor with tag number and terminal board number. If conductor is routed between two devices without going to a terminal board, mark wire with tag number and an arbitrary number not used on terminal block.

2.10.4.3 Instrumentation (all ends of complete run of all digital and analog inputs and outputs to/from PLC whether in PLC, integrated control panels, termination panels, MCC, local control panels or field device):

Tag number. Also use black wire for + (plus) polarity and white for - (minus).

Install wiring in plastic wiring duct. Route DC wiring separately from AC wiring. Route analog wiring separately from all other wiring except Digital Inputs (DI). Where wiring crosses a hinge or other flex point, bundle wires with plastic spiral wrap so bundles twist in a direction roughly parallel to hinge pin rather than folding or flexing perpendicular to hinged panel or door.

2.11 POWER STRIPS

As specified in Section 16422 TRANSIENT SUPPERESSORS. Where scheduled, provide sufficient quantity of power strips to connect all AC devices. Power strips may not be shown on Drawings. Show on record drawings.

2.12 SBR CONTROL PANEL WITHOUT MOTOR STARTERS

A complete control system shall be provided as described in the following.

The control system shall include control 115 volt circuit breaker, microprocessor control, operator interface display indicator lights, and HAND-OFF-AUTOMATIC selector switches.

The incoming service of the control system shall be 115 volt, 60 hertz, single-phase.

Controls and Elapse Time Meters (ETM's) as indicated by * for the following equipment shall be included within the SBR control panel:

SBR Equipment		Aerobic Digester Equipment	
Qty	Description	Qty	Description
* 2	Mixers	*1	Mixer
* 3	Blowers	*1	Sludge Pump
3	Blower Enclosure Fans	*2	Blowers
2	Influent Valves	2	Blower Enclosure Fans
2	Decanter Actuators	2	Level Sensors
2	Decanter Valves		
* 2	Sludge Pumps		
6	Level Sensors		
2	Air Control Valves		

2.12.1 **Enclosure:**

Free standing NEMA 12 steel enclosure - leg mounted.

Steel surfaces shall be cleaned, phosphate etched, and primed with a zinc rich enamel paint.

Finish paint shall be applied after all openings are completed and the surface is sanded and re-primed.

The exterior of the enclosure shall be painted Aqua Blue with an acrylic enamel.

The interior of the enclosure shall be painted with acrylic white enamel. The interior of the door shall be painted "Safety Orange".

Lifting points shall be provided as required for convenient handling of the complete control enclosure.

The completed control panel shall meet NEMA 12 rating.

All seams shall be continuously welded and ground smooth.

All gasketing shall be oil resistant and securely held in place.

Dual door panels shall have a keyed handle operated three point latching mechanism with roller latch rods (two keys shall be provided).

Doors shall be mounted using continuous heavy gauge piano hinge.

Door and enclosure stiffeners shall be welded into the enclosure as required to maintain flat smooth surfaces.

One print pocket shall be provided on the control panel door. One complete set of electrical control drawings shall be provided in the pocket.

2.12.2 **Control Panel Wiring Components**

All wires entering or leaving the control panel shall attach to the terminal strip.

All control panel wire shall be 14 AWG multi-strand machine tool wire minimum.

Insulation shall be MTW.

Wiring color continuation shall be:

120 VAC control power	-	RED
Neutral	-	WHITE
Ground	-	GREEN
power from remote source	-	YELLOW
24 volt DC (+)	-	BLUE
24 volt DC (-)	-	BLUE W/WHITE STRIPE

All wires shall have wire numbers attached to each end in accordance with the wiring schematic.

All terminals shall be strip mounted.

Voltage rating 600 volts.
Amperage rating 25 amps.
All terminals shall be numbered per the wiring schematic.
Wire terminations shall be tubular compression.

2.12.3 Switches/Pilot lights.

Selector switches shall be used on all automatic controlled equipment.

Selector switches shall be rated NEMA 4X with contacts rated at 60 amp make, 6 amp break, 10 amp continuous.

Pilot lights shall be 120/6 volt transformer type rated NEMA 4X.

All switches and lights shall be clearly labeled with white plastic legend plates with black lettering.

2.13 PROGRAMMABLE LOGIC CONTROLLER

Allen Bradley SLC 5/03

2.13.1 CPU POWER SUPPLY

5 amp capacity at 5VDC to backplane. 0.96 amp capacity at 24VDC to backplane.

200 ma 24 volt DC power for external equipment supply.

2.13.2 BASE UNIT

4, 7, 10 and 13 slot base units available to accept the CPU power supply, CPU, input and out modules.

Each base unit is provided with an expansion port to add additional bases and input/output modules.

2.13.3 CPU (Central Processing Unit)

The CPU physical hardware includes:

Machine interface port DH-485.
EEPROM memory module 12 K program capacity.
RAM back-up battery.
Keyed switch, run/program.
Diagnostic lights:
- PC Run
- Communications
- CPU fault

Battery low
Forced I/O

An EEPROM is supplied to back up the System RAM (Random Access Memory) of the CPU.

A DH-485 communication port is provided to communicate with the operator interface panel (located on the control panel door).

960 input/output capacity (discrete digital and analog I/O) is provided.

2.13.4 DIGITAL INPUT MODULE (16 POINT MODULE)

Input voltage 120 Volt (nominal)
85 - 132 VAC
47 - 63 Hertz
Switching response 35 ms on
45 ms off

16 status light indicators.

Removable wiring terminal strip.

UL and CSA approved.

2.13.5 DIGITAL OUTPUT MODULE (16 POINT)

16 relay outputs rated at 1.5 amps.

Load voltage 1800 VA make
180 VA break

No leakage current in the open state.

16 status light indicators

UL and CSA approved

2.13.6 OPERATOR INTERFACE DISPLAY

Kessler Ellis Products (K.E.P.) Zoid 2SLC

Display: Vacuum florescent display 2 lines of 20 characters each.

Direct serial communication to the CPU.

Serial RS-232 C printer port.

Bezel rated - NEMA 4X.

Screens programmed.

Process cycle phase with time remaining in the phase.

Phase time preset.

Aeration cycle time preset.

Alarm condition annunciator.

Auxiliary timer preset.

Pass word security lock out.

Real time clock with 10 year battery life.

Serial programming port.

CPU repeater programming port.

2.13.7 **SOFTWARE**

The PLC function is to control, sequence, and monitor the SBR.

PHASE CONTROL: The regulation of the process cycles of the SBR up to the maximum daily flow of the plant.

AERATION CONTROL: The regulation of the aeration and mixing systems to achieve optimum process control.

COMPONENT MONITORING: The monitoring of components for fault conditions and the orderly alarming and logging of the fault.

PART 3 - EXECUTION

3.1 EQUIPMENT INSTALLATION

All equipment furnished by the SBR manufacturer shall be installed as indicated and in accordance with the manufacturer's written instructions. Installation of the equipment shall be the responsibility of the installing Contractor and will be in accordance with requirements of the contract documents.

3.1.1 Adjusting

Field adjustments shall be made as required for proper operation of the equipment.

3.1.2 Testing

Testing shall be in accordance with equipment manufacturer's recommendations.

3.2 MANUFACTURER'S SERVICES

Services of a manufacturer's representative who is experience in the installation, adjustment, and operation of the equipment specified shall be provided. The representative shall supervise the installation, adjustment, and testing of the equipment. Twelve (12), 8-hour days shall be furnished in not more than three (3) separate trips to monitor equipment installation, initial operation of equipment, and to instruct Owner's personnel in Operation and Maintenance. Two (2) additional 8-hour days shall be furnished in a single trip for technical assistance with treatment process after plant start-up.

PART 4 - EXECUTION

4.1 COLOR CODING AND MARKING

Color code field wire same as internal wire if possible. Mark each field wire end except on twisted, shielded pairs, mark jacket, not individual wires. Text: As shown on submittals.

4.2 TESTS

Demonstrate all functions. Verify calibration of each analog indicator.

4.3 SCHEDULE

This section applies to Main Programmable Logic Controller (PLC); Remote PLC Cabinet; and Field Panels such as the BPCP, WPCP and similar panels for which connection diagrams are shown on the Drawings, or are required by the specifications.

4.3.1 Ambient Temperature:

80 degrees F.

4.3.2 Power strips required in:

a. Main Programmable Logic Controller (PLC) located in the Blower Building electrical room.

4.3.3 Cabinet coolers required in:

a. Programmable Logic Controller (PLC) located in the Blower Building electrical room.

- - o O o - -

SECTION 16917 - SEQUENCE OF OPERATION

PART 1 - GENERAL

1.1 INFLUENT PUMP STATION

Influent pump station is existing and controlled by an existing controller.

1.2 HEAD WORKS LOGIC DESCRIPTION

1.2.1 Bar Screen

1.2.1.1 Manual Control

Mechanical bar screen will be a HOA switch placed in the "hand" position.

1.2.1.2 Automatic Control

a. Field HOA Switches in "Automatic."

b. Mechanical bar screens shall operate from signal of level switch in head works chamber. Mechanical bar screen will then operate for a determined length of time as set by the time switch in the mechanical bar screen unit control panel, adjacent to the head works chamber.

1.2.1.3 Shutdown

Mechanical bar screen will shutdown from a high torque switch on the screen assembly or from a high temperature switch on the motor.

1.2.1.4 Alarm Conditions

The following alarm conditions will be reported to an existing RTU located that the power control panel, adjacent to the head works.

a. Level Alarm High

b. Torque Alarm High

c. Temp Alarm High

1.3 SEQUENTIAL BATCH REACTORS (SBR) #1 AND #2

1.3.1 SBRs are operated alternately in an identical fashion - only the sequence for one SBR (SBR #1) will be described.

1.3.1.1 Manual Control: All valves, mixers and blowers associated with the SBR can be actuated manually in an emergency, however, normal operation will be automatic via the PLC.

1.3.1.2 SBR equipment will be controlled automatically by the PLC. Each SBR is designed to operate on a 5 cycle per day basis. Each cycle has a duration of 288 minutes. The first 144 minutes waste water is being pumped into the basin. The last 144 minutes of the cycle is when treatment operations are occuring and waste water is being pumped into the other SBR tank.

The cycle consists of the following phases:

STATIC FILL (45 min)

a. Decant valve 285 - open

b. influent valve 286 - open

c. decant weir valve 288 closed

d. air valve 287 closed (blowers off)

e. mixer 281 - off

f. sludge pump 291 - off

MIXED FILL (30 min)

a. mixer 281 - on

REACT FILL/REACT (104 min)

a. influent valve 286 - closed

b. air valve 287 - open (blowers on)

SETTLE (40 min)

a. air valve 287 - closed (blowers off)

b. mixer 281 - off

DECANT (54 min for MGD = 1.13, 40 min for MGD = 0.75

a. decant weir valve 288 - open

SLUDGE WASTE (15 min)

a. sludge pump 291 - on

IDLE TIME (0 min for MGD=1.13, 14 min for MGD=0.75

a. alternate SBR (0 min for MGD = 1.13, 14 min for MGD =0.75)

Fill status of SBR basins indicated by float switch 280

1.4 AEROBIC DIGESTER

1.4.1 Aerobic Digester Mixer (M311), Aerobic Digester Sludge Pump (M321) and Aerobic Digester blowers (M361 and M371)

1.4.1.1 Manual Control: Field HOA switch in "Hand" position and "Start" pushbuttons for the mixer, sludge pump and blowers.

1.4.1.2 Automatic Control: With field HOA switches in the "Automatic" position, control of the Aerobic Digester mixer, sludge pump and blowers is by PLC. The digester float switch (LSH-300 and LSL-300) will provide information to the PLC to control the mixer and blower. LSL-300 off; LSH-300 off - Mixer (M311) and one blower on. LSH-300 on - Mixer (M311), Aerobic Digester blower and SBR sludge pumps off.

1.5 BLOWER BUILDING AND GENERATOR

1.5.1 Aeration Blowers

1.5.1.1 Manual Control:

Field Start pushbutton pressed, aeration blower runs. Field Stop pushbutton pressed stops the aeration blower.

1.5.1.2 Automatic Control:

a. Field HOA switches in "Automatic"

b. PLC will record run time of the aeration blowers.

c. Plant operating on commercial power. ATS switch 1 and ATS switch 2 in "Normal."
   1) Only two SBR aeration blowers (251 west and 261 center) and one Aerobic Digester blower (361 west or 371 east) shall be allowed to run at any time.
   2) Field panel HOA in "Auto." PLC energizes stop output of third SBR (271 east) and second Aerobic Digester blower when Operator starts two other SBR blowers and the Aerobic Digester blower.

d. Plant operating on commercial power. ATS switch 1 in "Normal" and ATS switch 2 in "Emergency."
   1) Only two SBR aeration blowers (251 west and 261 center) and one Aerobic Digester blower (361 west or 371 east) shall be allowed to run at any time.
   2) Field panel HOA in "Auto." PLC energizes stop output of third SBR (271 east) and second Aerobic Digester blower when Operator starts two other SBR blowers and the Aerobic Digester blower.

e. Plant operating on commercial power. ATS switch 1 in "Emergency" and ATS switch 2 in "Normal."
   1) Only two SBR aeration blowers (251 west and 261 center) and one Aerobic Digester blower (361 west or 371 east) shall be allowed to run at any time.
   2) Field panel HOA in "Auto." PLC energizes stop output of third SBR (271 east) and second Aerobic Digester blower when Operator starts two other SBR blowers and the Aerobic Digester blower.

f. Plant operating on standby power. ATS switch 1 in "Emergency" and ATS switch 2 in "Emergency."
   1) One SBR Blower on MCC-A and one SBR Blower on MCC-B and either of the Aerobic Digester Blowers can be allowed to run.
   2) Field panel HOA in "Auto." PLC energizes stop output of the alternate Aerobic Digester blower when Operator starts the primary Aerobic Digester blower.
   3) When plant resumes operation on commercial power after power failure, PLC resumes control described in section a, b, or c above.

a. Controls, Indications, and Alarms:

(1) Local:
   1) Aeration blower Start pushbutton.
   2) Aeration blower Stop pushbutton.

(2) At OIU: 16745.

1.6 CHLORINATION/DECHLORINATION PROCESS

1.6.1 Chlorine Contact Basin Mixers and Chemical Pumps

1.6.1.1 Manual Control: All chemical pumps in the Chlorination building and basin mixers can be operated manually by placing their respective Run-Off-Auto switch in the "Run" position.

1.6.1.2 Automatic Control: With the Run-Off-Auto switch in the "Auto" position, control in by the PLC as follows:

When level indicator signal from LT-600 (located at the chlorine contact basin inlet) shows a rising level, two of three (511, 512, 513) Sodium Hypochlorite pumps, one of two (521, 522) Sodium Bisulfite pumps, and both mixers (621, 631) are turned on.

These devices remain on as long as level indication warrants chlorination/dechlorination.

1.6.1.3 Alarm Conditions:

a. "Not Auto" alarm if any HOA swith is not in the "Auto" position

b. "Called-For-Not-Run" alarm: Alarm and shutdown if starter auxiliary contact closure for the mixer is not received within feedback delay period or if it fails for more than the delay period while running. Initial feedback delay period setting: 3 seconds

1.6.1.4 Controls, Indications, and Alarms:

a. local: HOA switches for all pumps and mixers

b. at OIU: 16745

1.7 WASHWATER PUMPS

1.7.1 Washwater Pumps M411 and M421

1.7.1.1 Manual Control:

Field HOA switch in "Hand" and field "Start" pushbutton pressed, washwater pump runs. Field HOA switch in "Off," washwater pump stops.

1.7.1.2 Automatic Control:

a. Washwater field HOA switch in "Auto." Washwater pressure switch "Low" for more than 3 seconds PLC starts washwater pump.

b. Washwater field HOA switch in "Auto." Washwater flow switch "High" for more than 2 seconds PLC starts washwater pump.

1.7.1.3 Alternation:

a. When either washwater pump stops.

b. When selected washwater pump "Not Auto" alarm occurs.

c. When selected washwater pump "Called-For-Not-Run" alarm occurs.

1.7.1.4 Shutdown:

Washwater field HOA switch in "Auto." Washwater pressure switch "High" and Washwater flow switch "Low." PLC starts an adjustable time delay. Initial time delay setting: 7 seconds. If pressure still "Normal" and flow still "Normal" after time delay times out, PLC stops washwater pump.

1.7.1.5 Alarm Conditions:

a. Washwater pump "Not Auto" alarm: If washwater pump HOA switch not "Auto," alarm.

b. Washwater pump "Called-For-Not-Run" alarm: Alarm and shutdown if starter auxiliary contact closure is not received within feedback delay period or if it fails for more than the delay period while running. Initial feedback delay period setting: 3 seconds.

1.7.1.6 Controls, Indications, and Alarms:

a. Local:
   1) Washwater pump HOA switch.
   2) Washwater pump Start pushbutton.

b. At OIU: 16745.

1.8 EFFLUENT PUMP STATION

1.8.1 Controls

1.8.1.1 Manual Control

Manual control of effluent pumps M801 and M802 will be a HOA switch for each starter placed in the "Hand" position.

1.8.1.2 Automatic Control

a. Field HOA switches in "Automatic"

b. PLC will control effluent pumps on signal from level Pressure Transmitter PI800 located at the chlorination building hydropneumatic tank. Pumps are to operate until desired level in tank has returned. PLC to be programmed to alternate pump M801 and M802 operation.

1.8.1.3 Shutdown

Effluent pumps will be shutdown upon following conditions:

a. Motor winding temperature high

b. Internal motor moisture trip

c. Station Low-Low level

1.8.1.4 Alarm conditions

a. "Not Auto" alarm if any HOA switch is not in the "Auto" position

b. Winding Temp Trip

c. Internal Moisture

d. Station Low-Low level

1.8.1.5 Controls, Indications, and Alarms

a. HOA switches for pumps

b. Section 16745 Operator Interface Unit

1.9 FLOODWATER PUMP STATION

1.9.1 Controls

1.9.1.1 Manual Control

Manual control of floodwater pumps will be a HOA switch for each starter placed in the "Hand" position.

1.9.1.2 Automatic Control

a. Field HOA switches in "Automatic"

b. Sealed mercury level switches will control floodwater pumps. A pump is to operate when level in station reaches level switch set at elevation 4259 ft. The pump will remain on until the level in the station returns to level switch at elevation 4258 ft. Duplex controller to be programmed to alternate pump operation.

1.9.1.3 Shutdown

Floodwater pumps will be shutdown upon following conditions;

a. Motor winding temperature high

b. Internal motor moisture trip

1.9.1.4 Alarm conditions

a. "Not Auto" alarm if any HOA switch is not in the "Auto" position

b. Winding Temp Trip

c. Internal Moisture

1.9.1.5 Controls, Indications, and Alarms

a. HOA switches for pumps

b. Section 16745 Operator Interface Unit

c. The PLC will not receive have any control, indications or alarms from floodwater pump station.

d. Red beacon will be provided on duplex controller for indication of an alarm condition.

1.10 POWER FAILURE AND RETURN LOGIC DESCRIPTION

1.10.1 Generator:

1.10.1.1 Automatic Control:

1.10.1.2 Alarm Conditions:

Generator "Called-For-Not-Run" alarm: Alarm and shutdown if run status contact closure is not received within feedback delay period or if it fails for more than the delay period while running. Initial feedback delay period setting: 10 seconds.

1.10.1.3 Controls, Indications, and Alarms:

Section 16745 - Operator Interface Unit

1.10.2 Power Failure:

1.10.2.1 Automatic Control:

a. Both emergency Automatic Transfer Switches 1 and 2 "Emergency", PLC power failure relay output to "Emergency" and stops all motors controlled by PLC.

b. PLC starts Cl2/SO2 water pump as called for by Chlorination/Dechlorination Water Pump Logic Description.

1.10.2.2 Alarm Conditions:

"Emergency Power" alarm: Emergency Automatic Transfer Switches 1 and 2 in "Emergency," alarm.

1.10.2.3 Controls, Indications, and Alarms:

a. Section 16745 - Operator Interface Unit

1.10.3 Power Return:

1.10.3.1 Automatic Control:

Upon return of normal power and Emergency Automatic Transfer Switch "Normal, PLC shall sequentially enable restart of motors (if starts are required by their respective logic descriptions) based on the following:

a. SBR Blowers.

b. Delay 10 seconds, then start one Aerobic Digester Blower.

c. Delay 2 minutes.

d. Delay 10 seconds between each of the following enable commands:
   1) One Mixer.
   2) Washwater pump.

e. Delay 3 seconds before each of the following start commands:
   1) All remaining motors sequentially by loop number.

1.11 ALARM LOGIC DESCRIPTION

Unless otherwise noted, each alarm shall latch. The term "in alarm" refers to the condition of an alarm having occurred and not having been cleared. Acknowledge shall be accomplished from any of the "Acknowledge" pushbuttons. Acknowledge pushbuttons shall be located on the Remote Panel and on the Main PLC. After an alarm has been acknowledged, it can be cleared in one of two ways:

a. Alarms which are not latched shall clear when the condition is corrected.

b. Alarms which are latched and require a reset shall clear when the condition is corrected and a "Reset" is pressed. Reset pushbuttons shall be located on the Remote Panel and on the Main PLC.

1.11.1 Plant Alarm Horn:

Between 7 am and 7 pm, alarms shall activate the plant alarm horn in one of two ways:

a. Each high priority alarm shall activate the horn contact producing a steady tone until acknowledged.

b. Each low priority alarm shall pulse the horn contact producing an intermittent tone until acknowledged.

Between 7 pm and 7 am, the plant horn shall not be activated.

1.11.2 Panel Alarm Horn:

Upon receipt of any alarm, PLC shall energize the panel alarm horn output. Pressing the "Acknowledge" pushbutton shall de-energize the output until another alarm is received.

1.11.3 Automatic Dialer:

When horn is enabled:

a. Any of the following high priority alarms shall activate dialer channel 1 after a 5 minute time delay.
   1) SBR basin high alarm
   2) Aerobic digester basin high alarm
   3) Power failure
   4) Blowers called-for-not-run alarm
   5) Chemical feed pumps called-for-not-run alarm
   6) SBR mixer called-for-not-run alarm
   7) Golf course irrigation pump called-for-not-run alarm

1.11.4 Last 50 Operations Log:

Store the date, time, and a unique code in a first-in, first-out register for 50 events. Events include non-PLC starting and stopping of each motor. Transmit register contents to Operator Interface Unit on demand for printing.

PART 2 - PRODUCTS

(NOT USED)

PART 3 - EXECUTION

3.1 INSTALLATION

Contractor shall install control logic in programmable logic controller.

- - o 0 o - -

SECTION 16941 - ELECTROMAGNETIC FLOWMETERS

PART 1 - GENERAL

1.1 GENERAL REQUIREMENTS

1.1.1 Standard Product

Material and equipment shall be a standard product of a manufacturer regularly engaged in the manufacture of the product and shall essentially duplicate items that have been in satisfactory use for at least 2 years prior to bid opening. The experience use shall include applications of equipment and materials under similar circumstances and of the same design and rating as the equipment specified. Equipment items shall be capable of being serviced by an organization that is, in the opinion of the Contracting Officer, reasonably convenient to the site.

1.2 SUBMITTALS

The following shall be submitted in accordance with Section 01300 - SUBMITTALS:

SD-01, Data

Manufacturer's literature.

Instrument specification data forms completed by Contractor and to include all pertinent data for each instrument. Sample data form provided at end of section for reference.

I.S.A. instrument specification data forms completed by Contractor and to include all pertinent data for each instrument.

Operation and Maintenance Data.

Manufacturer's literature.

Corrected instrument specification data forms completed by Contractor and to include all pertinent data for each instrument. Sample data form at end of section for reference.

Manufacturer's complete operations and maintenance manuals, including the following items as a minimum. If the standard manuals do not specifically include this information, then prepare it specifically for this project.

a. Operating Instructions.
b. Maintenance Instructions.
c. Calibrating Instructions.
d. Guide to Troubleshooting.
e. List of Available Spare Parts.

PART 2 - PRODUCTS

2.1 ELECTROMAGNETIC FLOWMETERS

2.1.1 System Accuracy Requirements:

2.1.1.1 Overall:

Plus or minus 0.5% of rate from 50% to 100% of scale; plus or minus (1-rate/100) % from 10% to 50% of scale; plus or minus 0.1% of span from 12% to 10% of scale.

2.1.1.2 Repeatability:

Better than 0.1% of rate.

2.1.1.3 Linearity:

Less than 0.1% of rate.

2.1.1.4 Temperature error:

Less than plus or minus 0.05% per degree F.

2.1.2 Environmental Requirements:

2.1.2.1 Temperature:

15 to 130 degrees F.

2.1.2.2 Humidity:

0 to 100%.

2.1.3 Flowtube:

2.1.3.1 Body:

321 stainless steel.

2.1.3.2 Liner:

Bonded Neoprene.

2.1.3.3 Electrodes:

316 stainless steel.

2.1.3.4 Grounding rings:

2 each.

2.1.3.5 Flanges:

Carbon steel with minimum 300 psi flanged to noted pipe.

2.1.4 Transmitter:

Separately mounted from flowtube. Capable of being calibrated in engineering units in the field by use of switches and jumpers. Digital indicator shall be readable with cover closed.

2.1.4.1 Enclosure:

NEMA 4X

2.1.4.2 Input power:

115 VAC plus or minus 10%.

2.1.4.3 Process signal output:

4 to 20 mA into 0 to 900 ohms, completely isolated from power and ground.

2.1.4.4 Magnetic coil signal:

Pulsed DC with high initial pulse so electrode reading is taken under steady state conditions.

2.1.4.5 Automatic zeroing:

Circuit shall self-zero each time the coil signal is off (approximately 2 times per second).

2.1.4.6 Input impedance of electrode voltage amplifier:

Minimum one teraohm. If amplifier has a lower impedance, then provide as part of the flowtube a manually operated, externally accessible cleaner for each electrode.

2.1.4.7 Dynamic response time:

2 to 64 seconds zero to full scale or full scale to zero, field adjustable.

2.1.5 Cable

Manufacturer of flowmeter provide cable for connection from transmitter to flowtube.

PART 3 - EXECUTION

3.1 INSTALLATION

Install in accordance with manufacturer's recommendations.

3.2 FIELD SERVICE REPRESENTATIVE

Furnish the services of a field service representative to:

a. Calibrate transmitter and submit test report.

b. Conduct four-hour training session in repair and calibration of transmitter.

c. Service representative shall provide a written report certifying that all equipment is properly installed, fully functional, and ready for use.

3.3 SCHEDULE

Structure	Transmitter	Span GPM
Aerobic Digesters	FT-301	0 - 150 GPM
Effluent Pump Station	FT-600	0 - 1000 GPM

- - o O o - -

SECTION 16946 - LEVEL TRANSMITTERS

PART 1 - GENERAL

1.1 GENERAL REQUIREMENTS

1.1.1 Standard Product

Material and equipment shall be a standard product of a manufacturer regularly engaged in the manufacture of the product and shall essentially duplicate items that have been in satisfactory use for at least 2 years prior to bid opening. The experience use shall include applications of equipment and materials under similar circumstances and of the same design and rating as the equipment specified. Equipment items shall be capable of being serviced by an organization that is, in the opinion of the Contracting Officer, reasonably convenient to the site.

1.2 SYSTEM RESPONSIBILITY

Purchase from a single manufacturer the electronic transmitters, sensing elements, interconnecting cable, and calibration unit.

1.3 SUBMITTALS

The following shall be submitted in accordance with SECTION: 01300 - SUBMITTALS:

SD-01 Data

Manufacturer's catalog cuts, descriptive data, technical data, and ratings.

Connection diagrams.

Instrument specification data forms completed by Contractor and to include all pertinent data for each instrument. Sample data form provided at end of Section for reference.

Operation and Maintenance Data.

Additional copies of final corrected submittals.

Manufacturer's standard O&M Manual.

1.4 EXTRA MATERIALS

One complete transmitter.

PART 2 - PRODUCTS

2.1 ADMITTANCE LEVEL TRANSMITTERS

2.1.1 Transmitter:

4-20 mA output shall represent 0 to 100 percent level to within plus or minus 1 percent, including control power variation effect, temperature effects, and long term drift. Control power: Loop powered. Digital output meter shall read in feet. Meter accuracy: plus or minus 1 percent. Meter visible through viewing window without opening door. Output isolated from ground. 4000VDC test breakdown voltage. Noninteracting zero control and span control. Operate properly from -40 degrees F. to +160 degrees F. Transmitter shall generate an RF signal up to 15kHZ which is impressed on the sensing element, measure the admittance of the sensing element circuit by comparing the sensing

element current with a standard supply current across a wide range bridge circuit, and convert the admittance to a 4-20mA output signal. Changes in water level will change the admittance, and thus the output signal. Transmitter shall include circuitry to enable the system to ignore grease, foam or other buildup or debris on the sensing element. Transmitter shall include a 0 to 30 second adjustable delay to suppress the effects of turbulence. Provide heavy duty transient suppression on power, RF signal and 4-20mA output. Power to sensing element shall comply with NEC requirements for intrinsically safe circuits. Provide RF filtering so hand-held radio transmitters do not affect the transmitter output. Equipment employing a battery in the circuitry will not be acceptable. Enclosure: NEMA 4 outdoors. NEMA 12 indoors.

2.1.2 Sensing Element:

Flexible sensing element, 3/16 inch diameter stainless steel braided cable with polypropylene insulation and integral weight assembly. Suitable ofr use in raw sewage application. Provide appropriate number of spacers for length of gauge line. Intrinsically safe. Mount through 6-inch station stilling well.

2.1.3 Interconnecting Cable:

Coaxial cable with shield and electrically separate, physically integral insulated ground wire. Potted to sensing element at one end, factory terminated at other end. Provide long cable kit for each installation that requires more than the standard cable length.

2.1.4 Calibration System:

Capacitance box provided as part of system. Fixed capacitance valves for zero and span level simulation to be factory installed to represent sensing element provided.

2.1.5 Drexelbrook Engineering Company, or equivalent.

2.2 CAPACITANCE LEVEL TRANSMITTERS

Diaphragm-actuated, low hysteresis, pipe or bracket mount design with two-wire solid-state electronic DC current output. Transmitter shall produce output signal of 4-20mA DC. Output shall be capable of driving 600 ohm load when supplied power from 24VDC power supply.

2.2.1 Accuracy Requirements:

Maximum measurement error shall not exceed plus or minus 0.25 percent of span, includes combined effects of linearity, hysteresis, and repeatability. Zero shift shall not exceed plus or minus 0.5 percent of span for temperature shift of 100 degrees F.

2.2.2 Ambient:

Suitable for installation in areas with ambient temperature between minus 20 degrees F. and plus 200 degrees F., and relative humidity of 0 percent to 100 percent.

2.2.3 Differential pressure range:

Factory calibrated as scheduled.

2.2.4 Body Bolts:

Cadmium-plated carbon steel.

2.2.5 Electronics:

Solid-state with linear output and plug-in circuit boards.

2.2.6 Materials of Construction:

Type 316 stainless steel diaphragm and trim. Flanges shall be cadmium-plated carbon steel.

2.2.7 Transmitter electronic housing:

NEMA 4X

Factory tag as scheduled. Rosemount Model 1151DP Alphaline, or equivalent.

2.3 STRAIN GAGE LEVEL TRANSMITTERS

Diaphragm-actuated, low hysteresis, pipe or bracket mount design with two-wire solid-state electronic DC current output. ansmitter shall produce output signal of 4-20mA DC. Minimum output signal shall be equal to 0 percent of span and maximum output signal shall be equal to 100 percent of span. Output shall be capable of driving 1000 ohm load when supplied power from 24VDC power supply, and be isolated from power and ground.

2.3.1 Accuracy Requirements:

Maximum measurement error shall not exceed plus or minus 0.5 percent of span, includes combined effects of linearity, hysteresis, and deadband. Zero shift shall not exceed plus or minus 0.5 percent of upper range limit for temperature shift of 100 degrees F.

2.3.2 Ambient:

Suitable for installation in areas with ambient temperature between 20 degrees F. and 140 degrees F., and relative humidity of 10 percent to 95 percent.

2.3.3 Differential pressure range:

0 inch to 400 inches water column, unless scheduled otherwise.

2.3.4 Span turndown:

400:1, unless scheduled otherwise.

2.3.5 Body Bolts:

Stainless steel.

2.3.6 Electronics:

Microprocessor based with linear or square root output, user selectable. Self-diagnostics for all operating functions including meter body-sensor, memory, and microprocessor, providing an output alarm signal. Constant test current available regardless of pressure. Output on overrange: 21mA. Output on alarm: greater than 21mA. Digital communication of specific alarm condition to Communicator.

2.3.7 Capable of receiving a superimposed digital signal on the 4-20mA loop wiring from a Communicator to allow performance of remote configuration and diagnostics.

2.3.8 Capable of being reranged without calibration pressure being applied.

2.3.9 Supply transmitter with internal prewired plug-in test connector and precision resistor or other means to permit checking transmitter output signal without interrupting loop operation.

2.3.10 Materials of Construction:

Type 316 stainless steel diaphragm and trim. Flanges shall be Type 316 stainless steel.

2.3.11 Transmitter electronic housing:

NEMA 4X and NEMA 7.

2.3.12 Communicator:

Furnish a smart communicator with rechargeable batteries, battery charger, and other accessories. Communicator shall be capable of being connected to the signal loop for entering offset, zero, and span calibration, and for diagnostic testing.

2.3.13 Honeywell ST 3000, Bailey BC Smart Transmitter, or equivalent.

2.4 SUBMERSIBLE STRAIN GAGE LEVEL TRANSMITTERS

2.4.1 Transmitter:

24VDC input, 2 wire.

2.4.1.1 Full Scale Output (FSO):

4 to 20mA.

2.4.1.2 Pressure Range:

0 to 60 inches water column.

2.4.1.3 Zero Offset Adjustment:

0 to 100 percent of FSO.

2.4.1.4 Calibration Switch:

Self-calibrating at 25 percent and 85 percent points. Calibrate as specified by Contracting Officer at time of submittal review.

2.4.1.5 Span Adjustment:

25 percent to 100 percent of FSO.

2.4.1.6 Linearity:

0.25 percent of FSO.

2.4.1.7 Hysteresis:

Less than plus or minus 0.25 percent of FSO.

2.4.1.8 Repeatability:

Less than plus or minus 0.1 percent of FSO.

2.4.1.9 Load Impedance:

1100 ohms maximum at 36VDC.

2.4.1.10 Operating Temperature:

30 degrees F. to 250 degrees F.

2.4.1.11 Temperature Effect on Span:

Less than 1.5 percent per 100 degrees F.

2.4.1.12 Temperature Effect on Zero:

Less than 1.5 percent per 100 degrees F.

2.4.1.13 Proof pressure:

150 inches.

2.4.1.14 Long-Term Stability:

Better than plus or minus 0.25 percent over six months.

2.4.1.15 Enclosure:

NEMA 12, separate from transducer.

2.4.2 Transducer:

Solid state strain gage type. Range: 0 to 60 inches water column. Enclosure: Submersible, stainless steel. Mounting: Any position. Effect on zero adjusted out after installation. Electrical Connection: Sealed integral cable. Cable shall be enclosed in flexible, submersible conduit with a breather tube, supplied as a complete assembly.

2.4.2.1 Support Cable:

Stainless steel. No portion of the electronics, except the strain gage itself, shall be mounted within the transducer.

2.4.3 Viatran, or equivalent.

PART 3 - EXECUTION

3.1 CALIBRATION

3.1.1 Calibrate to zero and to maximum level as directed by Engineer in field.

3.2 INSTALLATION

Install as shown on Drawings and in accordance with manufacturer's recommendations. Instruments shall be mounted so that they are rigidly supported, level and plumb, and in such a manner as to provide accessibility; protection from damage; isolation from heat, shock and vibration; and freedom from interference with other equipment, piping, and electrical work. Instruments, cabinets, and panels will not be installed until heavy construction work adjacent to instruments has been completed to extent that damage

will be unlikely to installation by such construction work. Manufacturer's recommendations referred to herein shall be as stated in manufacturer's instruction books and/or by manufacturer's service representative. Final interpretation of "installation requirements" will be by Contracting Officer. Instrumentation equipment shall be mounted to building steel, concrete floors, or walls using pipe mounting stands or field-fabricated mounting brackets. Instrumentation equipment mounting bracket shall be secured to building steel by welding and to concrete or masonry building structure by expansion-type anchors. No instrumentation equipment shall be mounted to exterior removable panels. If vibration-free location is not available for instrument mounting, appropriate vibration shock mounting shall be provided by use of rubber grommets or other vibration dampeners designed for vibration absorption subject to Contracting Officer's review.

3.2.1 Instrument Accessibility

Following general rules shall be adhered to, unless limited by other requirements in design of system. Instrument process connections shall be located for maximum convenience in operation and servicing of instrument. Connections shall be oriented so that instruments or piping will not obstruct aisles, platforms, or ladders. Field-mounted instruments shall be installed so that they are accessible from grade, platform, or permanent ladder. Instruments requiring adjustment or inspection shall be accessible for servicing from grade, walkway, platform, or permanent ladder.

3.2.2 Cable Lengths:

Contractor shall coordinate required cable lengths with actual field routing of cable. Do not splice cable. Provide continuous length of cable from level sensor to level transmitter.

3.3 SCHEDULE

Level transmitters required for this project: 2.1

Chlorine Contact Basin Level:

a. Tag Number: LE-600, LT-600

b. Fluid: Raw Sewage.

c. Pressure: Atmospheric.

- - o O o - -

APPENDIX A
TAG LIST

PLC CABINET

Tag	Loop	Description	Origin	Destination	Zero	Span	Eng Units	Signal Range	PLC Type	GRACK	RSOLPU	MOTOT	MOD+	MOD-	MOD C	Comments
LSH	-200A	SBR #2 END REACT FILL LEVEL SWITCH HIGH	FIELD	PLC	NORMAL	HIGH		120VAC	DI							
LSH	-200B	SBR #2 END MIX FILL LEVEL SWITCH HIGH	FIELD	PLC	NORMAL	HIGH		120VAC	DI							
LSH	-200C	SBR #2 END DECANT FILL LEVEL SWITCH HIGH	FIELD	PLC	NORMAL	HIGH		120VAC	DI							
HS	-211A	SBR #2 MIXER HOA SWITCH-AUTO	FIELD	PLC	NTAUTO	AUTO		120VAC	DI							
HS	-211B	SBR #2 MIXER START PUSHBUTTON	FIELD			START										
HS	-211C	SBR #2 MIXER VALVE ACTUATOR OPEN-CLOSE-AUTO SWITCH	FIELD	PLC	NTAUTO	AUTO		120VAC	DI							
M	-211	SBR #2 MIXER	FIELD	MCCC												
SV	-211	SBR #2 MIXER VALVE ACTUATOR	FIELD		CLOSED	OPEN										
YA	-211	SBR #2 MIXER OIU CALLED-FOR-NOT-RUN ALARM	PLC	OIU		ALARM										
YL	-211A	SBR #2 MIXER MCC RUN PILOT LIGHT	MCCC		OFF	ON										
YL	-211B	SBR #2 MIXER OIU RUN LIGHT	PLC	OIU	OFF	ON										
YS	-211A	SBR #2 MIXER START COMMAND	PLC	MCCC		START		24VDC	DO							
YS	-211B	SBR #2 MIXER RUN STATUS	MCCC	PLC	OFF	ON		120VAC	DI							
ZA	-211	SBR #2 MIXER OIU NOT AUTO ALARM	PLC	OIU		ALARM										
HS	-215	SBR #2 DECANT VALVE OFF-OPEN-CLOSE-AUTO SWITCH	FIELD	PLC	NTAUTO	AUTO		120VAC	DI							
VM	-215	SBR #2 DECANT VALVE	FIELD													
YS	-215A	SBR #2 DECANT VALVE OPEN COMMAND	PLC	FIELD		OPEN		24VDC	DO							
YS	-215B	SBR #2 DECANT VALVE CLOSE COMMAND	PLC	FIELD	CLOSE			24VDC	DO							
YS	-215C	SBR #2 DECANT VALVE OIU OPEN STATUS	PLC	OIU		OPEN										
YS	-215D	SBR #2 DECANT VALVE OIU CLOSED STATUS	PLC	OIU	CLOSED											
ZA	-215	SBR #2 DECANT VALVE OIU NOT AUTO ALARM	PLC	OIU		ALARM										
ZSC	-215	SBR #2 DECANT VALVE POSITION SWITCH OPEN	FIELD	PLC		OPEN		120VAC	DI							
ZSO	-215	SBR #2 DECANT VALVE POSITION SWITCH CLOSED	FIELD	PLC	CLOSED			120VAC	DI							
HS	-216	SBR #2 INFLUENT VALVE OFF-OPEN-CLOSE-AUTO SWITCH	FIELD	PLC	NTAUTO	AUTO		120VAC	DI							
VM	-216	SBR #2 INFLUENT VALVE	FIELD													
YS	-216A	SBR #2 INFLUENT VALVE OPEN COMMAND	PLC	FIELD		OPEN		24VDC	DO							
YS	-216B	SBR #2 INFLUENT VALVE CLOSE COMMAND	PLC	FIELD	CLOSE			24VDC	DO							
YS	-216C	SBR #2 INFLUENT VALVE OIU OPEN STATUS	PLC	OIU		OPEN										

PLC CABINET

Tag	Loop	Description	Origin	Destination	Zero	Span	Eng Units	Signal Range	PLC Type	GRACK	RSOLPU	MOTO+	MOD-	MODC	Comments
YS	-216D	SBR #2 INFLUENT VALVE OIU CLOSED STATUS	PLC	OIU	CLOSED										
ZA	-216	SBR #2 INFLUENT VALVE OIU NOT AUTO ALARM	PLC	OIU		ALARM									
ZSC	-216	SBR #2 INFLUENT VALVE POSITION SWITCH OPEN	FIELD	PLC		OPEN		120VAC	DI						
ZSO	-216	SBR #2 INFLUENT VALVE POSITION SWITCH CLOSED	FIELD	PLC	CLOSED			120VAC	DI						
HS	-217	SBR #2 AIR VALVE OFF-OPEN-CLOSE-AUTO SWITCH	FIELD	PLC	NTAUTO	AUTO		120VAC	DI						
VM	-217	SBR #2 AIR VALVE	FIELD												
YS	-217A	SBR #2 AIR VALVE OPEN COMMAND	PLC	FIELD		OPEN		24VDC	DO						
YS	-217B	SBR #2 AIR VALVE CLOSE COMMAND	PLC	FIELD	CLOSE			24VDC	DO						
YS	-217C	SBR #2 AIR VALVE OIU OPEN STATUS	PLC	OIU		OPEN									
YS	-217D	SBR #2 AIR VALVE OIU CLOSED STATUS	PLC	OIU	CLOSED										
ZA	-217	SBR #2 AIR VALVE OIU NOT AUTO ALARM	PLC	OIU		ALARM									
ZSC	-217	SBR #2 AIR VALVE POSITION SWITCH OPEN	FIELD	PLC		OPEN		120VAC	DI						
ZSO	-217	SBR #2 AIR VALVE POSITION SWITCH CLOSED	FIELD	PLC	CLOSED			120VAC	DI						
HS	-218	SBR #2 DECANT WEIR VALVE OFF-OPEN-CLOSE-AUTO SWITCH	FIELD	PLC	NTAUTO	AUTO		120VAC	DI						
VM	-218	SBR #2 DECANT WEIR VALVE	FIELD												
YS	-218A	SBR #2 DECANT WEIR VALVE OPEN COMMAND	PLC	FIELD		OPEN		24VDC	DO						
YS	-218B	SBR #2 DECANT WEIR VALVE CLOSE COMMAND	PLC	FIELD	CLOSE			24VDC	DO						
YS	-218C	SBR #2 DECANT WEIR VALVE OIU OPEN STATUS	PLC	OIU		OPEN									
YS	-218D	SBR #2 DECANT WEIR VALVE OIU CLOSED STATUS	PLC	OIU	CLOSED										
ZA	-218	SBR #2 DECANT WEIR VALVE OIU NOT AUTO ALARM	PLC	OIU		ALARM									
ZSC	-218	SBR #2 DECANT WEIR VALVE POSITION SWITCH OPEN	FIELD	PLC		OPEN		120VAC	DI						
ZSO	-218	SBR #2 DECANT WEIR VALVE POSITION SWITCH CLOSED	FIELD	PLC	CLOSED			120VAC	DI						
HS	-221A	SBR #2 SLUDGE PUMP HAND-OFF-AUTO SWITCH	FIELD	PLC	NTAUTO	AUTO		120VAC	DI						
HS	-221B	SBR #2 SLUDGE PUMP START PUSHBUTTON	FIELD			START									
M	-221	SBR #2 SLUDGE PUMP	FIELD	MCCB											
TSH	-221	SBR #2 SLUDGE PUMP TEMPERATURE SWITCH HIGH	FIELD	PLC	HIGH	NORMAL		120VAC	DI						
YL	-221A	SBR #2 SLUDGE PUMP MCC RUN PILOT LIGHT	MCCB		OFF	ON									
YL	-221B	SBR #2 SLUDGE PUMP OIU RUN LIGHT	PLC	OIU	OFF	ON									

PLC CABINET

Tag	Loop	Description	Origin	Destination	Zero	Span	Eng Units	Signal Range	PLC Type	GRACK	RSOUP	LOPT	MODO+	MOD-	MODC	Comments
YS	-221A	SBR #2 SLUDGE PUMP START COMMAND	PLC	MCCA		START		24VDC	DO							
YS	-221B	SBR #2 SLUDGE PUMP RUN STATUS	MCCB	PLC	OFF	ON		120VAC	DI							
ZA	-221	SBR #2 SLUDGE PUMP OIU NOT AUTO ALARM	PLC	OIU		ALARM										
HS	-251A	EAST SBR BLOWER HOA SWITCH	FIELD	MCCA	NTAUTO	AUTO		120VAC	DI							
HS	-251B	EAST SBR BLOWER START PUSHBUTTON	FIELD			START										
M	-251	EAST SBR BLOWER	FIELD	MCCA												
YL	-251A	EAST SBR BLOWER MCC RUN PILOT LIGHT	MCCA		OFF	ON										
YL	-251B	EAST SBR BLOWER OIU RUN LIGHT	PLC	OIU	OFF	ON										
YS	-251A	EAST SBR BLOWER STOP COMMAND	PLC	MCCA	STOP			24VDC	DO							
YS	-251B	EAST SBR BLOWER RUN STATUS	MCCA	PLC	OFF	ON		120VAC	DI							
YS	-251C	EAST SBR BLOWER START COMMAND	PLC	MCCA	START	ON		24VDC	DO							
ZA	-251	EAST SBR BLOWER OIU NOT AUTO ALARM	PLC	OUI		ALARM										
HS	-261A	CENTER SBR BLOWER HOA SWITCH	FIELD	MCCC	NTAUTO	AUTO		120VAC	DI							
HS	-261B	CENTER SBR BLOWER START PUSHBUTTON	FIELD			START										
M	-261	CENTER SBR BLOWER	FIELD	MCCC												
YA	-261	CENTER SBR BLOWER OIU CALLED-FOR-NOT-RUN ALARM	PLC	OIU		ALARM										
YL	-261A	CENTER SBR BLOWER MCC RUN PILOT LIGHT	MCCC		OFF	ON										
YL	-261B	CENTER SBR BLOWER OIU RUN LIGHT	PLC	OIU	OFF	ON										
YS	-261A	CENTER SBR BLOWER STOP COMMAND	PLC	MCCC	STOP			24VDC	DO							
YS	-261B	CENTER SBR BLOWER RUN STATUS	MCCC	PLC	OFF	ON		120VAC	DI							
YS	-261C	CENTER SBR BLOWER START COMMAND	MCCC	PLC		START		24VDC	DO							
ZA	-261	CENTER SBR BLOWER OIU NOT AUTO ALARM	MCCC	PLC		ALARM										
HS	-271A	WEST SBR BLOWER HOA SWITCH	FIELD	MCCB	NTAUTO	AUTO		120VAC	DI							
HS	-271B	WEST SBR BLOWER START PUSHBUTTON	FIELD	MCCB		START										
M	-271	WEST SBR BLOWER	FIELD	MCCB												
YA	-271	WEST SBR BLOWER OIU CALLED-FOR-NOT-RUN ALARM	PLC	OIU		ALARM										
YL	-271A	WEST SBR BLOWER MCC RUN PILOT LIGHT	MCCB		OFF	ON										
YL	-271B	WEST SBR BLOWER OIU RUN LIGHT	PLC	OIU	OFF	ON										

PLC CABINET

Tag	Loop	Description	Origin	Destination	Zero	Span	Eng Units	Signal Range	PLC Type	GRACK	RSOLPU	MOOT+	MOD-	MODC	Comments
YS	-271A	WEST SBR BLOWER STOP COMMAND	PLC	MCCB	STOP			24VDC	DO						
YS	-271B	WEST SBR BLOWER RUN STATUS	MCCB	PLC	OFF	ON		120VAC	DI						
YS	-271C	WEST SBR BLOWER START COMMAND	MCCB	PLC		START		24VDC	DO						
ZA	-271	WEST SBR BLOWER OIU NOT AUTO ALARM	PLC	OIU		ALARM									
LSH	-280A	SBR #1 END REACT FILL LEVEL SWITCH HIGH	FIELD	PLC	NORMAL	HIGH		120VAC	DI						
LSH	-280B	SBR #1 END MIX FILL LEVEL SWITCH HIGH	FIELD	PLC	NORMAL	HIGH		120VAC	DI						
LSH	-280C	SBR #1 END DECANT LEVEL SWITCH HIGH	FIELD	PLC	NORMAL	HIGH		120VAC	DI						
HS	-281A	SBR #1 MIXER HAND-OFF-AUTO SWITCH	FIELD	PLC	NTAUTO	AUTO		120VAC	DI						
HS	-281B	SBR #1 MIXER START PUSHBUTTON	FIELD			START									
HS	-281C	SBR #1 MIXER VALVE ACTUATOR OPEN-CLOSE-AUTO SWITCH	FIELD	PLC	NTAUTO	AUTO		120VAC	DI						
M	-281	SBR #1 MIXER	FIELD	MCCA											
SV	-281	SBR #1 MIXER VALVE ACTUATOR	FIELD		CLOSED	OPEN									
YA	-281	SBR #1 MIXER OIU CALLED-FOR-NOT-RUN ALARM	PLC	OIU		ALARM									
YL	-281A	SBR #1 MIXER MCC RUN PILOT LIGHT	MCCA		OFF	ON									
YL	-281B	SBR #1 MIXER OIU RUN LIGHT	PLC	OIU	OFF	ON									
YS	-281A	SBR #1 MIXER START COMMAND	PLC	MCCA		START		24VDC	DO						
YS	-281B	SBR #1 MIXER RUN STATUS	MCCA	PLC	OFF	ON		120VAC	DI						
ZA	-281	SBR #1 MIXER OIU NOT AUTO ALARM	PLC	OIU		ALARM									
HS	-285	SBR #1 DECANT VALVE OFF-OPEN-CLOSE-AUTO SWITCH	FIELD	PLC	NTAUTO	AUTO		120VAC	DI						
VM	-285	SBR #1 DECANT VALVE	FIELD												
YS	-285A	SBR #1 DECANT VALVE OPEN COMMAND	PLC	FIELD		OPEN		24VDC	DO						
YS	-285B	SBR #1 DECANT VALVE CLOSE COMMAND	PLC	FIELD	CLOSE			24VDC	DO						
YS	-285C	SBR #1 DECANT VALVE OIU OPEN STATUS	PLC	OIU		OPEN									
YS	-285D	SBR #1 DECANT VALVE OIU CLOSED STATUS	PLC	OIU	CLOSED										
ZA	-285	SBR #1 DECANT VALVE OIU NOT AUTO ALARM	PLC	OIU		ALARM									
ZSC	-285	SBR #1 DECANT VALVE POSITION SWITCH OPEN	FIELD	PLC		OPEN		120VAC	DI						
ZSO	-285	SBR #1 DECANT VALVE POSITION SWITCH CLOSED	FIELD	PLC	CLOSED			120VAC	DI						

PLC CABINET

Tag	Loop	Description	Origin	Destination	Zero	Span	Eng Units	Signal Range	PLC Type	GRACK	RSOLUP	MOOT	MOD+	MOD-	MOD C	Comments
HS	-286	SBR #1 INFLUENT VALVE OFF-OPEN-CLOSE-AUTO SWITCH	FIELD	PLC	NTAUTO	AUTO		120VAC	DI							
VM	-286	SBR #1 INFLUENT VALVE	FIELD													
YS	-286A	SBR #1 INFLUENT VALVE OPEN COMMAND	PLC	FIELD		OPEN		24VDC	DO							
YS	-286B	SBR #1 INFLUENT VALVE CLOSE COMMAND	PLC	FIELD	CLOSE			24VDC	DO							
YS	-286C	SBR #1 INFLUENT VALVE OIU OPEN STATUS	PLC	OIU		OPEN										
YS	-286D	SBR #1 INFLUENT VALVE OIU CLOSED STATUS	PLC	OIU	CLOSED											
ZA	-286	SBR #1 INFLUENT VALVE OIU NOT AUTO ALARM	PLC	OIU		ALARM										
ZSC	-286	SBR #1 INFLUENT VALVE POSITION SWITCH OPEN	FIELD	PLC		OPEN		120VAC	DI							
ZSO	-286	SBR #1 INFLUENT VALVE POSITION SWITCH CLOSED	FIELD	PLC	CLOSED			120VAC	DI							
HS	-287	SBR #1 AIR VALVE OFF-OPEN-CLOSE-AUTO SWITCH	FIELD	PLC	NTAUTO	AUTO		120VAC	DI							
VM	-287	SBR #1 AIR VALVE	FIELD													
YS	-287A	SBR #1 AIR VALVE OPEN COMMAND	PLC	FIELD		OPEN		24VDC	DO							
YS	-287B	SBR #1 AIR VALVE CLOSE COMMAND	PLC	FIELD	CLOSE			24VDC	DO							
YS	-287C	SBR #1 AIR VALVE OIU OPEN STATUS	PLC	OIU		OPEN										
YS	-287D	SBR #1 AIR VALVE OIU CLOSED STATUS	PLC	OIU	CLOSED											
ZA	-287	SBR #1 AIR VALVE OIU NOT AUTO ALARM	PLC	OIU		ALARM										
ZSC	-287	SBR #1 AIR VALVE POSITION SWITCH OPEN	FIELD	PLC		OPEN		120VAC	DI							
ZSO	-287	SBR #1 AIR VALVE POSITION SWITCH CLOSED	FIELD	PLC	CLOSED			120VAC	DI							
HS	-288	SBR #1 DECANT WEIR VALVE OFF-OPEN-CLOSE-AUTO SWITCH	FIELD	PLC	NTAUTO	AUTO		120VAC	DI							
VM	-288	SBR #1 DECANT WEIR VALVE	FIELD													
YS	-288A	SBR #1 DECANT WEIR VALVE OPEN COMMAND	PLC	FIELD		OPEN		24VDC	DO							
YS	-288B	SBR #1 DECANT WEIR VALVE CLOSE COMMAND	PLC	FIELD	CLOSE			24VDC	DO							
YS	-288C	SBR #1 DECANT WEIR VALVE OIU OPEN STATUS	PLC	OIU		OPEN										
YS	-288D	SBR #1 DECANT WEIR VALVE OIU CLOSED STATUS	PLC	OIU	CLOSED											
ZA	-288	SBR #1 DECANT WEIR VALVE OIU NOT AUTO ALARM	PLC	OIU		ALARM										
ZSC	-288	SBR #1 DECANT WEIR VALVE POSITION SWITCH OPEN	FIELD	PLC		OPEN		120VAC	DI							
ZSO	-288	SBR #1 DECANT WEIR VALVE POSITION SWITCH CLOSED	FIELD	PLC	CLOSED			120VAC	DI							
HS	-291A	SBR #1 SLUDGE PUMP HAND-OFF-AUTO SWITCH	FIELD	PLC	NTAUTO	AUTO		120VAC	DI							

PLC CABINET

Tag	Loop	Description	Origin	Destination	Zero	Span	Eng Units	Signal Range	PLC Type	GRACK	RSOLUPT	MOD+	MOD-	MOD C	Comments
HS	-291B	SBR #1 SLUDGE PUMP START PUSHBUTTON	FIELD			START									
M	-291	SBR #1 SLUDGE PUMP	FIELD	MCCA											
TSH	-291	SBR #1 SLUDGE PUMP TEMPERATURE SWITCH HIGH	FIELD	PLC	HIGH	NORMAL		120VAC	DI						
YA	-291	SBR #1 SLUDGE PUMP OIU CALLED-FOR-NOT-RUN ALARM	PLC	OIU		ALARM									
YL	-291A	SBR #1 SLUDGE PUMP MCC RUN PILOT LIGHT	MCCA		OFF	ON									
YL	-291B	SBR #1 SLUDGE PUMP OIU RUN LIGHT	PLC	OIU	OFF	ON									
YS	-291A	SBR #1 SLUDGE PUMP START COMMAND	MCCA	PLC		START		24VDC	DO						
YS	-291B	SBR #1 SLUDGE PUMP RUN STATUS	MCCA	PLC	OFF	ON		120VAC	DI						
ZA	-291	SBR #1 SLUDGE PUMP OIU NOT AUTO ALARM	PLC	OIU		ALARM									
LSH	-300	AEROBIC DIGESTER HIGH LEVEL SWITCH ALARM	FIELD	PLC	NORMAL	HIGH		120VAC	DI						
LSL	-300	AEROBIC DIGESTER LOW LEVEL SWITCH ALARM	FIELD	PLC	NORMAL	LOW		120VAC	DI						
FE	-301	AEROBIC DIGESTER SLUDGE FLOW ELEMENT													
FT	-301	AEROBIC DIGESTER SLUDGE FLOW TRANSMITTER	FIELD	PLC	0	150	GPM	4-20mA	AI						
HS	-311A	AEROBIC DIGESTER MIXER HOA SWITCH	FIELD	MCCC	NTAUOT	AUTO		120VAC	DI						
HS	-311B	AEROBIC DIGESTER MIXER START PUSHBUTTON	FIELD			START									
M	-311	AEROBIC DIGESTER MIXER	FIELD	MCCC											
YA	-311	AEROBIC DIGESTER MIXER OIU CALLED-FOR-NOT-RUN ALARM	PLC	OIU		ALARM									
YL	-311A	AEROBIC DIGESTER MIXER MCC RUN PILOT LIGHT	MCCC		OFF	ON									
YL	-311B	AEROBIC DIGESTER MIXER OIU RUN LIGHT	PLC	OIU	OFF	ON									
YS	-311A	AEROBIC DIGESTER MIXER STOP COMMAND	MCCC	PLC	STOP			24VDC	DO						
YS	-311B	AEROBIC DIGESTER MIXER RUN STATUS	MCCC	PLC	OFF	ON		120VAC	DI						
YS	-311C	AEROBIC DIGESTER MIXER START COMMAND	MCCC	PLC		START		24VDC	DO						
ZA	-311	AEROBIC DIGESTER MIXER OIU NOT AUTO ALARM				ALARM									
HS	-321A	AEROBIC DIGESTER SUMP PUMP HOA SWITCH	FIELD	MCCC	NTAUTO	AUTO		120VAC	DI						
HS	-321B	AEROBIC DIGESTER SUMP PUMP START PUSHBUTTON	FIELD			START									
M	-321	AEROBIC DIGESTER SUMP PUMP	FIELD	MCCC											
TSH	-321	AEROBIC DIGESTER SUMP PUMP TEMPERATURE SWITCH HIGH	FIELD	PLC	HIGH	NORMAL		120VAC	DI						

PLC CABINET

Tag	Loop	Description	Origin	Destination	Zero	Span	Eng Units	Signal Range	PLC Type	GRACK	RSOLUPT	MOD+	MOD-	MODC	Comments
YL	-321	AEROBIC DIGESTER SUMP PUMP MCC RUN PILOT LIGHT	MCCC		OFF	ON									
YS	-321A	AEROBIC DIGESTER SUMP PUMP START COMMAND	MCCC	PLC		START		24VDC	DO						
ZA	-321	AEROBIC DIGESTER SUMP PUMP OIU NOT AUTO ALARM				ALARM									
HS	-361A	EAST AERATION BLOWER HOA SWITCH	FIELD	MCCA	NTAUTO	AUTO		120VAC	DI						
HS	-361B	EAST AERATION BLOWER START PUSHBUTTON	FIELD			START									
M	-361	EAST AERATION BLOWER	FIELD	MCCA											
YL	-361A	EAST AERATION BLOWER MCC RUN PILOT LIGHT	MCCA		OFF	ON									
YL	-361B	EAST AERATION BLOWER OIU RUN LIGHT	PLC	OIU	OFF	ON									
YS	-361	EAST AERATION BLOWER STOP COMMAND	MCCA	PLC	STOP			24VDC	DO						
YS	-361B	EAST AERATION BLOWER RUN STATUS	MCCA	PLC	OFF	ON		120VAC	DI						
YS	-361C	EAST AERATION BLOWER START COMMAND	MCCA	PLC		START		24VDC	DO						
ZA	-361	EAST AERATION BLOWER OIU NOT AUTO ALARM				ALARM									
HS	-371A	WEST AERATION BLOWER HOA SWITCH	FIELD	MCCB	NTAUTO	AUTO		120VAC	DI						
HS	-371B	WEST AERATION BLOWER START PUSHBUTTON	FIELD			START									
M	-371	WEST AERATION BLOWER	FIELD	MCCB											
YL	-371A	WEST AERATION BLOWER MCC RUN PILOT LIGHT	MCCB		OFF	ON									
YL	-371B	WEST AERATION BLOWER OIU RUN LIGHT	PLC	OIU	OFF	ON									
YS	-371	WEST AERATION BLOWER STOP COMMAND	MCCB	PLC	STOP			24VDC	DO						
YS	-371B	WEST AERATION BLOWER RUN STATUS	MCCB	PLC	OFF	ON		120VAC	DI						
YS	-371C	WEST AERATION BLOWER START COMMAND	MCCB	PLC		START		24VDC	DO						
ZA	-371	WEST AERATION BLOWER OIU NOT AUTO ALARM	PLC	OIU		ALARM									
FSH	-410	WASHWATER FLOW SWITCH HIGH	FIELD	PLC	HIGH	NORMAL		120VAC	DI						
PSL	-410	WASHWATER PRESSURE SWITCH LOW	FIELD	PLC	LOW	NORMAL		120VAC	DI						
HS	-411A	EAST WASHWATER PUMP HOA SWITCH-AUTO	FIELD	PLC	NTAUTO	AUTO		120VAC	DI						
HS	-411B	EAST WASHWATER PUMP START PUSHBUTTON	FIELD			START									
M	-411	EAST WASHWATER PUMP	FIELD	MCCA											
YA	-411	EAST WASHWATER PUMP OIU CALLED-FOR-NOT-RUN ALARM	PLC	OIU		ALARM									

PLC CABINET

Tag	Loop	Description	Origin	Destination	Zero	Span	Eng Units	Signal Range	PLC Type	RACK	RSOLUP	GOOD	MOD+	MOD-	MOD C	Comments
YL	-411A	EAST WASHWATER PUMP MCC RUN PILOT LIGHT	MCCA		OFF	ON										
YL	-411B	EAST WASHWATER PUMP OIU RUN LIGHT	PLC	OIU	OFF	ON										
YS	-411A	EAST WASHWATER PUMP START COMMAND	MCCA	PLC		START		24VDC	DO							
YS	-411B	EAST WASHWATER PUMP RUN STATUS	MCCA	PLC	OFF	ON		120VAC	DI							
ZA	-411	EAST WASHWATER PUMP OIU NOT AUTO ALARM	PLC	OIU		ALARM										
HS	-421A	WEST WASHWATER PUMP HOA SWITCH-AUTO	FIELD	PLC	NTAUTO	AUTO		120VAC	DI							
HS	-421B	WEST WASHWATER PUMP START PUSHBUTTON	FIELD			START										
M	-421	WEST WASHWATER PUMP	FIELD	MCCB												
YA	-421	WEST WASHWATER PUMP OIU CALLED-FOR-NOT RUN ALARM	PLC	OIU		ALARM										
YL	-421A	WEST WASHWATER PUMP MCC RUN PILOT LIGHT	MCCB		OFF	ON										
YL	-421B	WEST WASHWATER PUMP OIU RUN LIGHT	PLC	OIU	OFF	ON										
YS	-421A	WEST WASHWATER PUMP START COMMAND	MCCB	PLC		START		24 VDC	DI							
YS	-421B	WEST WASHWATER PUMP RUN STATUS	MCCB	PLC	OFF	ON		120VAC	DI							
ZA	-421	WEST WASHWATER PUMP OIU NOT AUTO ALARM	PLC	OIU		ALARM										
HS	-511	WEST SODIUM HYPOCHLORITE PUMP RUN-OFF-AUTO SWITCH	FIELD		NTAUTO	AUTO		120VAC	DI							
M	-511	WEST SODIUM HYPOCHLORITE PUMP	FIELD	LP2												
YS	-511	WEST SODIUM HYPOCHLORITE PUMP START COMMAND	PLC	FIELD		START		24VDC	DO							
ZA	-511	WEST SODIUM HYPOCHLORITE PUMP OIU NOT AUTO ALARM	PLC	OIU		ALARM										
HS	-512	CENTER SODIUM HYPOCHLORITE PUMP RUN-OFF-AUTO SWITCH	FIELD		NTAUTO	AUTO		120VAC	DI							
M	-512	CENTER SODIUM HYPOCHLORITE PUMP	FIELD	LP2												
YS	-512	CENTER SODIUM HYPOCHLORITE PUMP START COMMAND	PLC	FIELD		START		24VDC	DO							
ZA	-512	CENTER SODIUM HYPOCHLORITE PUMP OIU NOT AUTO ALARM	PLC	OIU		ALARM										
HS	-513	EAST SODIUM HYPOCHLORITE PUMP RUN-OFF-AUTO SWITCH	FIELD		NTAUTO	AUTO		120VAC	DI							
M	-513	EAST SODIUM HYPOCHLORITE PUMP	FIELD	LP2												
YS	-513	EAST SODIUM HYPOCHLORITE PUMP START COMMAND	PLC	FIELD		START		24VDC	DO							
ZA	-513	EAST SODIUM HYPOCHLORITE PUMP OIU NOT AUTO ALARM	PLC	OIU		ALARM										

PLC CABINET

Tag	Loop	Description	Origin	Destination	Zero	Span	Eng Units	Signal Range	PLC Type	GRACK	RUP	SOLOT	MOD+	MOD-	MOD C	Comments
HS	-521	NORTH SODIUM BISULFITE PUMP RUN-OFF-AUTO SWITCH	FIELD		NTAUTO	AUTO		120VAC	DI							
M	-521	NORTH SODIUM BISULFITE PUMP	FIELD	LP2												
YS	-521	NORTH SODIUM BISULFITE PUMP START COMMAND	PLC	FIELD		START		24VDC	DO							
ZA	-521	NORTH SODIUM BISULFITE PUMP OIU NOT AUTO ALARM	PLC	OIU		ALARM										
HS	-522	SOUTH SODIUM BISULFITE PUMP RUN-OFF-AUTO SWITCH	FIELD		NTAUTO	AUTO		120VAC	DI							
M	-522	SOUTH SODIUM BISULFITE PUMP	FIELD	LP2												
YS	-522	SOUTH SODIUM BISULFITE PUMP START COMMAND	PLC	FIELD		START		24VDC	DO							
ZA	-522	SOUTH SODIUM BISULFITE PUMP OIU NOT AUTO ALARM	PLC	OIU		ALARM										
HS	-523	CENTER SODIUM BISULFITE PUMP RUN-OFF-AUTO SWITCH	FIELD													
M	-523	CENTER SODIUM BISULFITE PUMP	FIELD	LP2												
YS	-523	CENTER SODIUM BISULFITE PUMP START COMMAND	PLC	FIELD	OFF	ON		24VDC	DO							
ZA	-523	CENTER SODIUM BISULFITE PUMP NOT AUTO ALARM	FIELD	PLC		ALARM		120VAC	DI							
FE	-600	EFFLUENT PUMP STATION FLOW ELEMENT	FIELD	FIELD												
FT	-600	EFFLUENT PUMP STATION FLOW TRANSMITTER	FIELD	PLC	0	1000	GPM	4-20mA	AI							
FE	-610	CL2 BASIN INLET FLOW ELEMENT	FIELD	FIELD												
FT	-610	CL2 BASIN INLET FLOW TRANSMITTER	FIELD	PLC	0	5.0	MGD	4-20mA	AI							
HS	-621A	CL2 CONTACT BASIN MIXER HOA SWITCH - AUTO	FIELD	PLC	NTAUTO	AUTO		120VAC	DI							
HS	-621B	CL2 CONTACT BASIN MIXER START PUSHBUTTON	FIELD													
M	-621	CL2 CONTACT BASIN MIXER CHLORINE MIXER MOTOR														
YS	-621A	CL2 CONTACT BASIN MIXER START COMMAND	MCC	PLC		START		24VDC	DO							
YS	-621B	CL2 CONTACT BASIN MIXER OIU NOT AUTO ALARM	PLC	OIU		ALARM										
ZA	-621	CL2 CONTACT BASIN MIXER OIU NOT AUTO ALARM	PLC	OIU		ALARM										
HS	-631A	CL2 CONTACT BASIN MIXER HOA SWITCH - AUTO	FIELD	PLC	NTAUTO	AUTO		120VAC	DI							
HS	-631B	CL2 CONTACT BASIN MIXER START PUSHBUTTON	FIELD													
M	-631	CL2 CONTACT BASIN MIXER DE-CHLORINATION MIXER MOTOR														

PLC CABINET

Tag	Loop	Description	Origin	Destination	Zero	Span	Eng Units	Signal Range	PLC Type	GRACK	RSOLPU	MOTOR+	MOD-	MODC	Comments
YS	-631	CL2 CONTACT BASIN MIXER RUN STATUS	MCCC	PLC	OFF	ON		120VAC	DI						
FE	-800	EFFLUENT FLOW ELEMENT	FIELD												
FIRQ	-800	EFFLUENT FLOW INDICATOR/RECORDER/TOTALIZER	PLC	FIELD	0	5.0	MGD	4-20mA	AO						
FIT	-800	EFFLUENT FLOW INDICATOR/TRANSMITTER	FIELD	PLC	0	5.0	MGD	4-20mA	AI						
LSH	-900	GENERATOR FUEL STORAGE TANK HIGH LEVEL SWITCH-ALARM	FIELD	PLC	HIGH	NORMAL		120VAC	DI						
LSL	-900	GENERATOR FUEL STORAGE TANK LOW LEVEL SWITCH-ALARM	FIELD	PLC	NORMAL	LOW		120VAC	DI						
YA	-900	GENERATOR PREALARM	FIELD	PLC	HIGH	NORMAL		120VAC	DI						
YS	-900	GENERATOR RUN STATUS	FIELD	PLC	OFF	ON		120VAC	DI						
AA	-990A	MAIN PLC ALARM HORN	FIELD												
HS	-990A	MAIN PLC ACKNOWLEDGE PUSHBUTTON	PLC			ACK		120VAC	DI						
HS	-990B	MAIN PLC RESET PUSHBUTTON	PLC			RESET		120VAC	DI						

	AI	AO	RTD	DI(120VAC)	DI(24VDC)	DO	DO/ISO
DEDICATED I/O POINTS:	4	1	0	0	79	0	41
20% SPARE I/O POINTS:	1	0	0	16	0	8	0
TOTAL I/O POINTS FOR PLC CABINET :	5	1	0	95	0	49	0

NEW MEXICO

PLANS FOR

WASTEWATER TREATMENT PLANT

PROJECT NO. CZQZ-930255

SOLICITATION NO. : XXXX##-##-X-####

DATED : MAY 9, 1996

FINAL DESIGN

United States Army
Corps of Engineers
...Serving the Army
...Serving the Nation

ALBUQUERQUE DISTRICT

SIGNATURE AFFIXED BELOW INDICATE OFFICIAL RECOMMENDATION AND APPROVED OF ALL DRAWINGS IN THIS SET AS INDEXED ON THIS SHEET.		
SUBMITTED: CHIEF, DESIGN BRANCH	APPROVED: CHIEF, ENGINEERING & PLANNING DIVISION	PLATE 1

MOLZEN-CORBIN
STANLEY CONSULTANTS
A JOINT VENTURE

TO VIEW THE MAP AND/OR MAPS WITH THIS DOCUMENT, PLEASE CALL THE HAZARDOUS WASTE BUREAU AT 505-476-6000 TO MAKE AN APPOINTMENT