FOSTER WHEELER ENVIRONMENTAL CORPORATION

May 28, 1997
TERC-011.001-97X-044

JUN 1997 RECEIVED

Mr. Mark Mercier
U.S. Army Corps of Engineers
Omaha District
ATTN: CEMRO-ED-EA, 10th Floor
2 Central Park Plaza
222 South 15th Street
Omaha, NE 68102-4978

Subject: TERC Contract DACW45-94-D-0003, DO 11, WAD 1
Submittal of the Final Operation and Maintenance Manual for the SWMU 136 Bioventing System, Holloman AFB, New Mexico

Dear Mr. Mercier:

Enclosed are five copies of the Final Operation and Maintenance Manual for the SWMU 136 Bioventing System. Additional submittals are indicated in the distribution below.

If you have any questions, please contact me at (303) 980-3598.

Sincerely,
Foster Wheeler Environmental Corporation

Sina Sayedian

For Ronald E. Versaw, P.E.
Delivery Order Manager - Holloman AFB

REV/bw
Enclosures

cc: Warren Neff USAF, Holloman AFB - 4 copies
Rick Macfarlane USACE, Holloman AFB - 2 copies
Dan Holmquist FWENC, Holloman AFB - 1 copy
Program File

143 UNION BOULEVARD, SUITE 1010, LAKEWOOD, CO 80228-1824
TEL: 303-988-2202 FAX: 303-980-3539

LIBRARY COPY

Headquarters, Air Combat Command
Langley Air Force Base,
Virginia

FINAL OPERATION AND MAINTENANCE MANUAL FOR THE SWMU 136 BIOVENTING SYSTEM

HOLLOMAN AFB
ALAMOGORDO, NM

MAY 1997

---

49 CES/CEV
Holloman Air Force Base
New Mexico

Foster Wheeler Environmental Corporation responses to comments on the Draft Operation and Maintenance Manual for the SWMU 136 Bioventing System, Holloman AFB, New Mexico

Comment	Response
From: Nancy L. Pridal	
1. General. Many of these comments are similar to my comments for the Draft T-38 O&M Manual. Also, some of my comments address issues carried over from the SWMU 136 Draft Final Construction Work Plan. I received FW response to my comments from the Final Construction Work Plan and revised some of the following comments in light of the FW response.	No response required.
2. General. Include equipment catalog cuts, blower curves, etc. for all equipment, valves, meters, etc.	These will be included as an additional appendix in the final O&M manual.
3. General. Include a P&ID drawing which includes valve numbers.	A P&ID drawing will be included as an additional appendix in the final O&M manual.
4. General. Include a general equipment arrangement drawing.	A general equipment arrangement drawing will be included as an additional appendix in the final O&M manual.
5. 2.4, page 2-3. Include information on correcting the flowmeter reading when actual conditions vary from the calibration.	The flow correction formula has been added at the end of Section 2.
6. 2.4, page 2-3. The 0 to 10 psi range for a pressure gauge was in question during the review of the Draft Final Construction Work Plan. With a predicted target pressure range of 0.75 to 1.25 psi, a pressure gauge with a 0 to 3 psi range would be more appropriate for accurate gauge response. Will a pressure gauge with a 0 to 6 psi range have enough sensitivity for the measurements required? The cost difference between the two gauges should be negligible.	Per the changes in the Draft Final Construction Work Plan for SWMU 136, the pressure gauge has been changed to 0 to 6 psi with an accuracy of ±2% full scale. The text has been changed to be consistent with the Draft Final Construction Work Plan.
7. 3.2, page 3-5. The second paragraph states that pressure and flow data will be logged daily. Paragraph 3.3.1 states that the parameters will be logged at startup and at weekly intervals. Paragraph 3.4 states that data collection will be conducted daily, but as experience is gained, data collection will occur weekly or less frequently. Paragraph 4.1.1 states that the flow rate and pressure will be collected daily. Be consistent with the requirement for collecting data in all areas of the text.	All references to pressure and flow data collection have been changed to daily.

JUN 1997 RECEIVED

Foster Wheeler Environmental Corporation responses to comments on the Draft Operation and Maintenance Manual for the SWMU 136 Bioventing System, Holloman AFB, New Mexico

Comment	Response
8. 3.2, page 3-5. Include in the text a reference to Sections 4.1 and 4.2 for detailed operating procedures.	The following text has been added to the end of the first paragraph of Section 3.2: "Operational inspections and maintenance procedures are detailed in Sections 4.1 and 4.2, respectively."
9. 3.5.2, page 3-9. Is there a history of bioventing injection air drying the subsurface soil at Holloman? Is there information from other bioventing sites at the base that may be included in this section that will make it more site specific?	Specific information on the effect of bioventing on subsurface soil moisture at Holloman AFB is not available at this time. The paragraph has been revised as follows: "Bioventing injection air tends to dry subsurface soil. Local soils generally contain greater than 4 percent moisture; however, there is little moisture recharge in this arid setting. The sensitivity of biological activity at SWMU 136 to moisture is unknown at this time. Theoretically, the reduction in soil moisture due to bioventing will be approximately 2 percent per year; however, as little as 1 inch of infiltration per year is sufficient to replace this lost soil moisture (Leeson and Hinchee 1995). On average, Holloman AFB receives approximately 8 to 10 inches of rainfall per year which will result in an infiltration rate of more than 1 inch per year. However, if it is determined that low moisture content is detrimentally affecting bioventing performance, surface addition of water through irrigation or humidification of injected air can be performed to supply additional moisture. An engineering evaluation of the best moisture addition technique will be performed."
10. 3.6.1, page 3-10. Are the control systems in a shed? Please clarify.	The paragraph has been revised as follows: "Operational problems with control systems are usually caused by electrical problems in the controller, which requires a service call to the equipment supplier. The SWMU 136 bioventing system does not contain any solenoid or actuating valves that could be affected by extreme weather."

Foster Wheeler Environmental Corporation responses to comments on the Draft Operation and Maintenance Manual for the SWMU 136 Bioventing System, Holloman AFB, New Mexico

Comment	Response
11. 3.6.2, page 3-11. Include the necessary corrective actions for overheating of the blower and no-flow conditions.	The paragraph has been changed as follows: "Events that may trigger a blower shutdown include a power failure, overheating of the blower, or a no-flow condition caused by flow blockages. Determine the cause of the blower shutdown and perform the necessary corrective action. Section 3.6.4 contains specific information about power loss. If power failure is not the cause of the shutdown, check the system for flow blockages, including the air filter, piping, and bioventing well. If flow blockages are found, remove the blockages. If no flow blockages are found in the air filter, piping, or bioventing well, use a surge block to clean the well screen. Also check the blower motor for bearing failure by turning the motor and noting any unusual noises or resistance to turning. If the motor bearings have failed, replace the bearings. After the necessary corrective actions have been performed, the system can be restarted."
12. 4.2.1, page 4-2. Expand the weekly routine maintenance to include blower, motor and venting well maintenance.	The blower, motor, and venting well are virtually maintenance free. The blower manufacturer recommends changing the motor bearings every 15,000 to 20,000 hours which is included in Section 4.1.1. The venting well only needs to be cleaned if flow blockages occur which is covered in Section 3.6.2. No text changes have been made concerning this comment.
13. 4.3.1, page 4-3. Include closing the flow control valve as a bullet item.	The following bullet item has been added: "Check that the flow control valve is fully closed."
14. Table 4-1. Include flow control valve fully closed as a checklist item.	The following checklist item has been added - "Flow control valve fully closed."
15. 7.1, page 7-1. Indicate who will be notified if approval for modification needs to be obtained.	The text has been changed as follows: "If a system modification is determined to be necessary, then the problem should be documented, an analysis conducted to determine the solution, and approval for modification obtained from the on-site System Engineer, Dino Bonaldo. The on-site System Engineer will also have access to the FWENC home office support staff to aid in determining what modifications are needed."

Foster Wheeler Environmental Corporation responses to comments on the Draft Operation and Maintenance Manual for the SWMU 136 Bioventing System, Holloman AFB, New Mexico

Comment	Response
16. 8.3.1, page 8-1. See comment #11 for cause of shutdown.	Section 8.3.1 has been revised as follows: "If the system is automatically shut down, it should be carefully checked before being returned to operation to determine the cause of the shutdown. The system should be inspected for broken/failed equipment, upgradient or downgradient blockages, and electrical power failure. Sections 3.6.2 and 3.6.4 contain specific information on determining the cause of a blower shutdown. After all necessary corrective actions have been taken, the system can be restarted but should be monitored for problems."
From: Judith Strawhecker on Chapter 6	
1. 9.6.1, 9-15 & Table 9-3. There is nothing in the table concerning benzene. I recommend inserting procedures for checking benzene: When the PID registers **sustained** readings between 0.5-5 ppm, pull detector tubes for benzene. If positive, the action required would be to upgrade to Level C. Level C continues until 50 ppm (because of the protection of the respirator) and at that point stop work and contact PHSM. For the other constituents: > 1 ppm - screen for benzene, ≥ 10 ppm - Level C PPE, ≥ 100 ppm - Stop work and consult with PHSM.	Table 9-3 has been revised to include the following action levels and actions for "System Maintenance – Section 4.0. Measuring gases in monitoring wells and collecting soil samples" - TRPH >1 ppm Screen for benzene ≥10 ppm Upgrade to Level C ≥100 ppm Stop work and contact PHSM Benzene ≥0.5 ppm Upgrade to Level C ≥10 ppm Stop work and contact PHSM
2. Table 9-4. First Aid Procedures for Insect and Snake Bites. I would not recommend applying a constricting band in response to any type of bite. Such care could result in deteriorating the patient's condition which would make your company liable for damages - (In other words the employee is going to sue you not the spider). Foster Wheeler should provide medical support only and get the employee to medical help as quickly as possible.	Reference to applying a constricting band has been removed.
3. 9.12.4, 9-24. Medical Treatment Facilities. After mobilization, I'm requesting handwritten details to be written on the hospital map on the most efficient way to get to the base hospital or main gate from SWMU 136. This page is to be kept in the SSHP and a copy faxed to me.	Figure 9-1 has been changed to include SWMU 136 location, most efficient route arrows on the map, and detailed written instructions to both hospitals.
4. 9.14, 9-26. Signature page. Please sign and date before final.	The signature page has been signed and dated.

Foster Wheeler Environmental Corporation responses to comments on the Draft Operation and Maintenance Manual for the SWMU 136 Bioventing System, Holloman AFB, New Mexico

Comment	Response
5. 10.0, 10-1. References. The USACE Safety and Health Requirements Manual, EM 385-1-1, has been updated - **3 September 1996**. Please change your reference text on page 9-15 as well.	The reference and text has been changed to September 1996.
6. Table 9-2. Required PPE column, under Routine Maintenance, potential contact with contaminated liquids, etc. Typo - **Equiped**.	Equiped has been changed to equipped.
7 9.2.2.6, 9-10. First paragraph. Typo - **weare**.	Weare has been changed to wear.
8. Table 9-4. Insect Bites. Typo - **scorpians**.	Scorpians has been changed to scorpions.

FINAL OPERATION AND MAINTENANCE MANUAL FOR THE SWMU 136 BIOVENTING SYSTEM HOLLOMAN AIR FORCE BASE, NEW MEXICO

Prepared for:

49 CES/CEVR

Holloman Air Force Base, NM

and

HQ ACC/CEVC

Langley Air Force Base, VA

Prepared by:

Foster Wheeler Environmental Corporation

143 Union Boulevard, Suite 1010

Lakewood, Colorado 80228-1824

Under Contract No. DACW45-94-D-0003

Delivery Order 11, Work Authorization Directive 1

U.S. Army Corps of Engineers

Omaha District

Omaha, Nebraska

May 1997

TABLE OF CONTENTS

LIST OF APPENDICES v
LIST OF TABLES vi
LIST OF FIGURES vii
LIST OF ACRONYMS viii

1.0 INTRODUCTION 1-1
1.1 PURPOSE 1-1
1.2 SITE LOCATION 1-1
1.3 SITE HISTORY 1-4

2.0 SYSTEM DESCRIPTION 2-1
2.1 MONITORING/INJECTION WELL CONFIGURATION 2-1
2.2 BLOWER 2-1
2.3 SYSTEM PIPING 2-2
2.4 INSTRUMENTATION AND CONTROLS 2-2

3.0 SYSTEM STARTUP AND OPERATIONAL STRATEGY 3-1
3.1 SYSTEM STARTUP 3-1
3.1.1 Equipment Checkout 3-1
3.1.2 Prestartup Testing 3-2
3.1.3 Startup 3-4
3.2 ROUTINE OPERATING PROCEDURES 3-5
3.3 SYSTEM MONITORING 3-5
3.3.1 Physical Parameters 3-5
3.3.2 Chemical Parameters 3-5
3.3.3 Biological Parameters 3-6
3.4 SYSTEM BALANCING 3-7
3.5 NUTRIENT AND MOISTURE ADDITION 3-7
3.5.1 Nutrients 3-8
3.5.2 Moisture 3-9
3.6 TROUBLESHOOTING GUIDE 3-10
3.6.1 Control Systems 3-10
3.6.2 Blower Shutdown 3-10
3.6.3 Limited Biological Activity 3-11
3.6.4 Power Loss 3-11

4.0 SYSTEM MAINTENANCE 4-1
4.1 OPERATIONAL INSPECTIONS 4-1
4.1.1 Site Visitation Log 4-1
4.2 ROUTINE MAINTENANCE PROCEDURES 4-2
4.2.1 Weekly Routine Maintenance 4-2

4.3 STARTUP AND TROUBLESHOOTING 4-2
4.3.1 Prestartup Checklist 4-2
4.3.2 Troubleshooting 4-4
4.4 CONSUMABLES AND SPARE PARTS INVENTORY 4-5

5.0 SAMPLING, ANALYSIS, AND REPORTING DOCUMENTATION 5-1
5.1 REMEDIATION GOALS 5-1
5.2 SAMPLING AND ANALYSIS SCHEDULE 5-1
5.3 DATA MANAGEMENT 5-2
5.3.1 Field Data Record 5-4
5.3.2 Field Data 5-4
5.3.3 Laboratory Data 5-5
5.3.4 Project Files 5-5
5.3.5 Status Reports 5-5
5.4 REPORTING 5-6
5.5 QUALITY ASSURANCE 5-6
5.6 QUALITY OBJECTIVES 5-7
5.6.1 Data Quality Objectives (DQOs) 5-7
5.6.2 Analytical Support Levels 5-7
5.6.3 Data Quality Indicators 5-7
5.6.4 Level of Field Quality Control Effort 5-7
5.7 SPECIAL VALIDATION 5-8

6.0 WASTE MANAGEMENT PROCEDURES 6-1
6.1 WASTE CHARACTERIZATION REQUIREMENTS 6-1
6.1.1 Regulatory Requirements 6-1
6.1.2 Anticipated Waste Streams 6-3
6.1.3 Waste Descriptions 6-4
6.1.4 Waste Characterization/Classification 6-7
6.1.5 Hazardous Waste Management 6-8
6.1.6 Waste Containerization and Storage 6-8
6.1.7 Documentation 6-10
6.2 TRAINING/CERTIFICATION REQUIREMENTS 6-11

7.0 CONTINGENCY PLAN 7-1
7.1 SYSTEM MODIFICATIONS 7-1
7.2 CRITERIA FOR TRIGGERING CORRECTIVE ACTIONS 7-1

8.0 SYSTEM SHUTDOWN AND CONFIRMATION OF CLEANUP 8-1
8.1 SHUTDOWN STRATEGY 8-1
8.2 CONFIRMATION SAMPLING REQUIREMENTS 8-1
8.3 SYSTEM SHUTDOWN CHECKLIST 8-1
8.3.1 Emergency Shutdown 8-1
8.3.2 Maintenance Shutdown 8-2
8.3.3 Remediation Shutdown 8-2
8.4 CLOSURE REPORT 8-2

9.0 SITE HEALTH AND SAFETY REQUIREMENTS FOR O&M ACTIVITIES 9-1
9.1 PERSONNEL AND RESPONSIBILITIES 9-1
9.1.1 Roles and Responsibilities 9-1
9.2 HAZARD ANALYSIS 9-1
9.2.1 Chemical Hazards 9-6
9.2.2 Physical Hazards 9-7
9.3 SITE WORK ZONES AND PERSONAL PROTECTIVE EQUIPMENT 9-13
9.3.1 Site Work Zones 9-13
9.3.2 Personal Protective Equipment 9-14
9.4 DECONTAMINATION 9-14
9.4.1 Personnel Decontamination 9-14
9.4.2 Equipment Decontamination 9-14
9.5 MEDICAL SURVEILLANCE 9-14
9.6 AIR MONITORING 9-15
9.6.1 Personal Exposure Monitoring 9-15
9.7 RESPIRATORY PROTECTION PROGRAM 9-15
9.8 TRAINING AND COMMUNICATION 9-15
9.8.1 General Training Requirements 9-15
9.8.2 On-Site Communications 9-17
9.8.3 Notification of Activities 9-17
9.8.4 Safety Orientation and Tailgate Meetings 9-17
9.9 GENERAL SAFETY RULES 9-18
9.10 FIRST AID PLAN 9-20
9.11 VISITOR REQUIREMENTS 9-20
9.12 EMERGENCY RESPONSE PLAN 9-23
9.12.1 General Requirements 9-23
9.12.2 Emergency Telephone Numbers 9-23
9.12.3 Incident Reporting Procedures 9-23
9.12.4 Medical Treatment Facilities 9-24
9.13 DANGEROUS WEATHER RESPONSE PLAN 9-24
9.14 APPROVALS 9-26

10.0 REFERENCES 10-1

LIST OF APPENDICES

Appendix A Standard Operating Procedures
Appendix B Reporting Forms
Appendix C Laboratory Precision and Accuracy Data
Appendix D Project Record Drawings and Vendor Information

LIST OF TABLES

TABLE	TITLE	PAGE
3-1	Equipment Checkout Checklist	3-2
3-2	Functional Performance Checklist	3-3
4-1	Prestartup Checklist	4-3
4-2	Troubleshooting Checklist	4-4
5-1	Sample Requirements	5-3
6-1	Groundwater Discharge Standards at Holloman AFB	6-2
6-2	Waste Management Requirements	6-5
9-1	Job Safety Analysis	9-2
9-2	PPE Requirements	9-5
9-3	Air Monitoring Requirements and Action Levels	9-16
9-4	Emergency First Aid Procedures	9-21

LIST OF FIGURES

FIGURE	TITLE	PAGE
1-1	Vicinity Map	1-2
1-2	SWMU 136 Site Map	1-3
9-1	Location Map for Hospitals	9-25

LIST OF ACRONYMS

AFB	Air Force Base
ANSI	American National Standards Institute
ASTM	American Society for Testing and Materials
BEC	Base Environmental Coordinator
BTEX	Benzene, Toluene, Ethylbenzene, and Xylene
CERCLA	Comprehensive Environmental Response, Compensation, and Liability Act
CFR	Code of Federal Regulations
CGI	Combustible Gas Indicator
CIH	Certified Industrial Hygienist
COC	Chain-of-Custody
CMC	Corporate Medical Consultant
CPR	Cardiopulmonary Resuscitation
CPVC	Chlorinated Polyvinyl Chloride
DO	Delivery Order
DOT	Department of Transportation
DPT	Direct Push Technology
DQCRs	Daily Quality Control Reports
DQO	Data Quality Objective
DRMO	Defense Reutilization and Marketing Office
DPT	Direct Push Technology
EMS	Emergency Medical Services
^{o}F	Degrees Fahrenheit
FID	Flame-Ionization Detector
FNPT	Female National Pipe Thread
fpm	Feet Per Minute
FTA	Fire Training Area
FWENC	Foster Wheeler Environmental Corporation
GFCI	Ground Fault Circuit Interrupter
HEPA	High Efficiency Particulate Air
HWMR	Hazardous Waste Management Regulations
IDW	Investigation-Derived Waste
IRP	Installation Restoration Program
IRPIMS	Installation Restoration Program Information Management System
JSA	Job Safety Analysis
LDR	Land Disposal Restriction
LEL	Lower Explosive Limit
LIMS	Laboratory Information Management System
LNAPL	Light Nonaqueous Phase Liquid
LTO	Long-Term Operations

mg/kg	Milligrams Per Kilogram
MNPT	Male National Pipe Thread
NMED	New Mexico Environmental Department
MSDS	Material Safety Data Sheet
NOI	Notice of Intent
O&M	Operation and Maintenance
OSHA	Occupational Safety and Health Administration
OVA	Organic Vapor Analyzer
O/WS	Oil/Water Separator
PCS	Petroleum Contaminated Soil
PEL	Permissible Exposure Limit
PHSM	Project Health and Safety Manager
P & I	Piping and Instrumentation
PID	Photoionization Detector
POC	Point of Contact
PPE	Personal Protective Equipment
psig	Pounds Per Square Inch Gauge
PVC	Polyvinyl Chloride
QA/QC	Quality Assurance/Quality Control
RAA	Regulatory Affairs Advisor
RCRA	Resource Conservation and Recovery Act
RFI	RCRA Facility Investigation
rpm	Revolutions Per Minute
SAP	Sample Analysis Plan
scfm	Standard Cubic Feet Per Minute
SHSO	Site Health and Safety Officer
SOP	Standard Operating Procedures
SSHP	Site Safety and Health Plan
SWMR	Solid Waste Management Regulations
SWMU	Solid Waste Management Unit
TERC	Total Environmental Restoration Contract
TCLP	Toxicity Characteristic Leaching Procedure
TLV	Threshold Limit Value
TKN	Total Kjeldahl Nitrogen
TRPH	Total Recoverable Petroleum Hydrocarbons
TSDF	Treatment, Storage, and Disposal Facility
UEL	Upper Explosive Limit
USACE	United States Army Corps of Engineers
USEPA	United States Environmental Protection Agency
VOC	Volatile Organic Compound
WAD	Work Authorization Directive
WOT	Waste Oil Tank
WWTF	Wastewater Treatment Facility

1.0 INTRODUCTION

Foster Wheeler Environmental Corporation (FWENC) was retained by the United States Army Corps of Engineers (USACE)-Omaha District to furnish operation and maintenance (O&M) manual preparation services for the Building 1119 Washrack Drainage Pit, which is designated as Solid Waste Management Unit (SWMU) 136, at Holloman Air Force Base (AFB) in New Mexico. These services involve the preparation of a manual for the O&M procedures for the SWMU 136 bioventing system.

This O&M manual is written to meet the requirements stipulated within the Total Environmental Restoration Contract (TERC) No. DACW45-94-D-0003, Delivery Order (DO) No. 11, Work Authorization Directive (WAD) 1. This manual provides a system description, operational strategy, system maintenance requirements, system shutdown and closure sampling guidance, waste management and contingency plans, and sampling, analysis, and reporting procedures for the SWMU 136 bioventing system.

1.1 PURPOSE

The purpose of this document is to provide guidance for the initial startup, daily operation, periodic maintenance, and system monitoring and shutdown of the SWMU 136 bioventing system. This guidance will ensure that the system is operated efficiently and for the shortest duration possible to effectively remediate the SWMU 136 plume.

1.2 SITE LOCATION

Holloman AFB is located in the Tularosa Basin in Otero County in southern New Mexico. It is located immediately southwest of the City of Alamogordo. Building 1119 is located at the northwest corner of Douglas Road and Kelly Road, as identified on the vicinity map shown in Figure 1-1. The abandoned washrack pad is located within the fenced yard area of Building 1119 and approximately 75 feet west-southwest of the building (Figure 1-2). The SWMU 136 area is defined by a 7-foot by 12-foot area immediately adjacent to the south end of the concrete washrack pad.

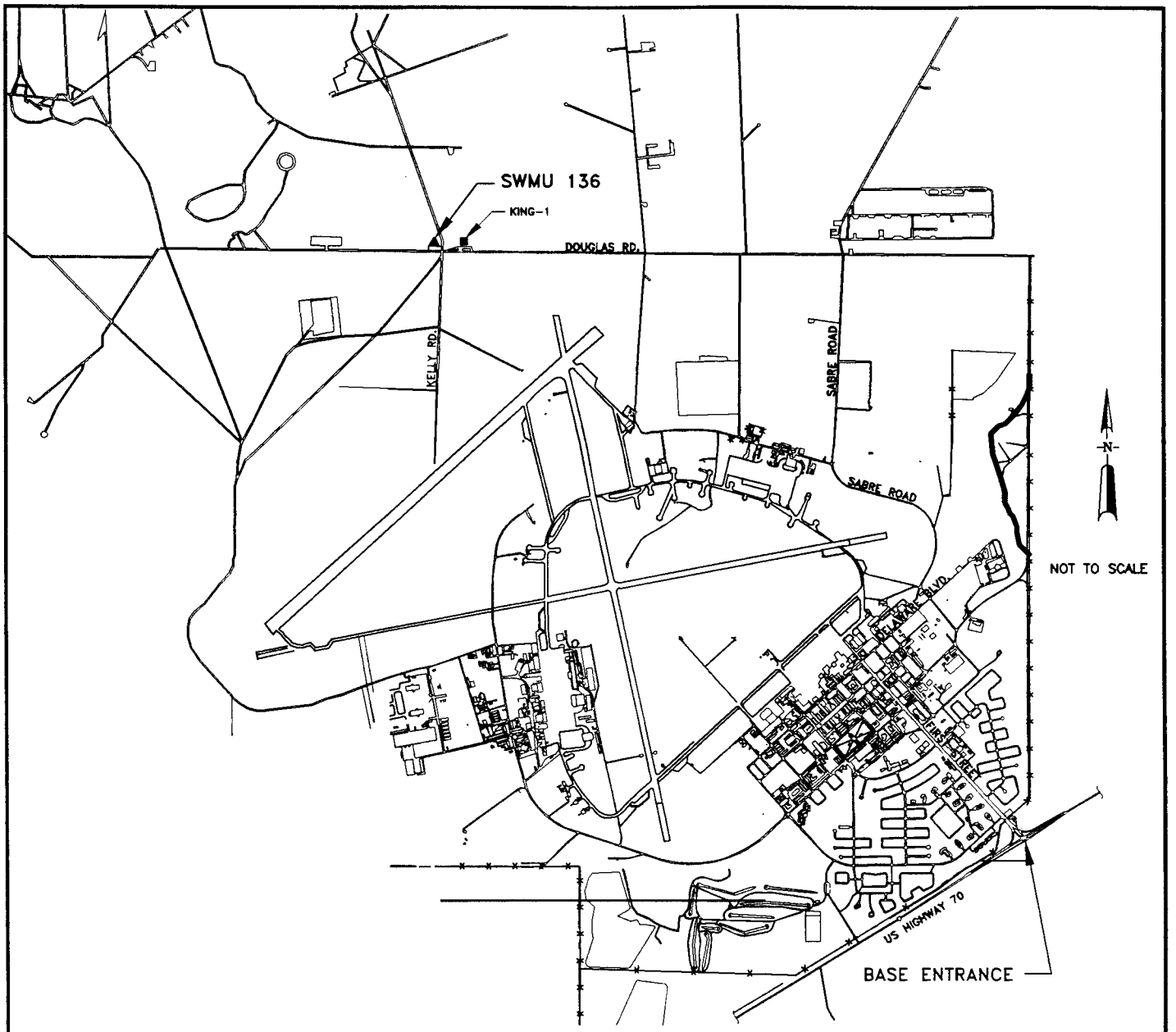

VICINITY MAP

Prepared for:
U.S. Army Corps of Engineers
for Holloman A.F.B.
Prepared May 1997

FIGURE 1-1
Vicinity Map

Holloman A.F.B., New Mexico
Prepared by:
Foster Wheeler Environmental Corporation

cwc c:\Projects\Holloman\swmu136\136-loc.DWG

Figure 1-2

SWMU 136 Site Map

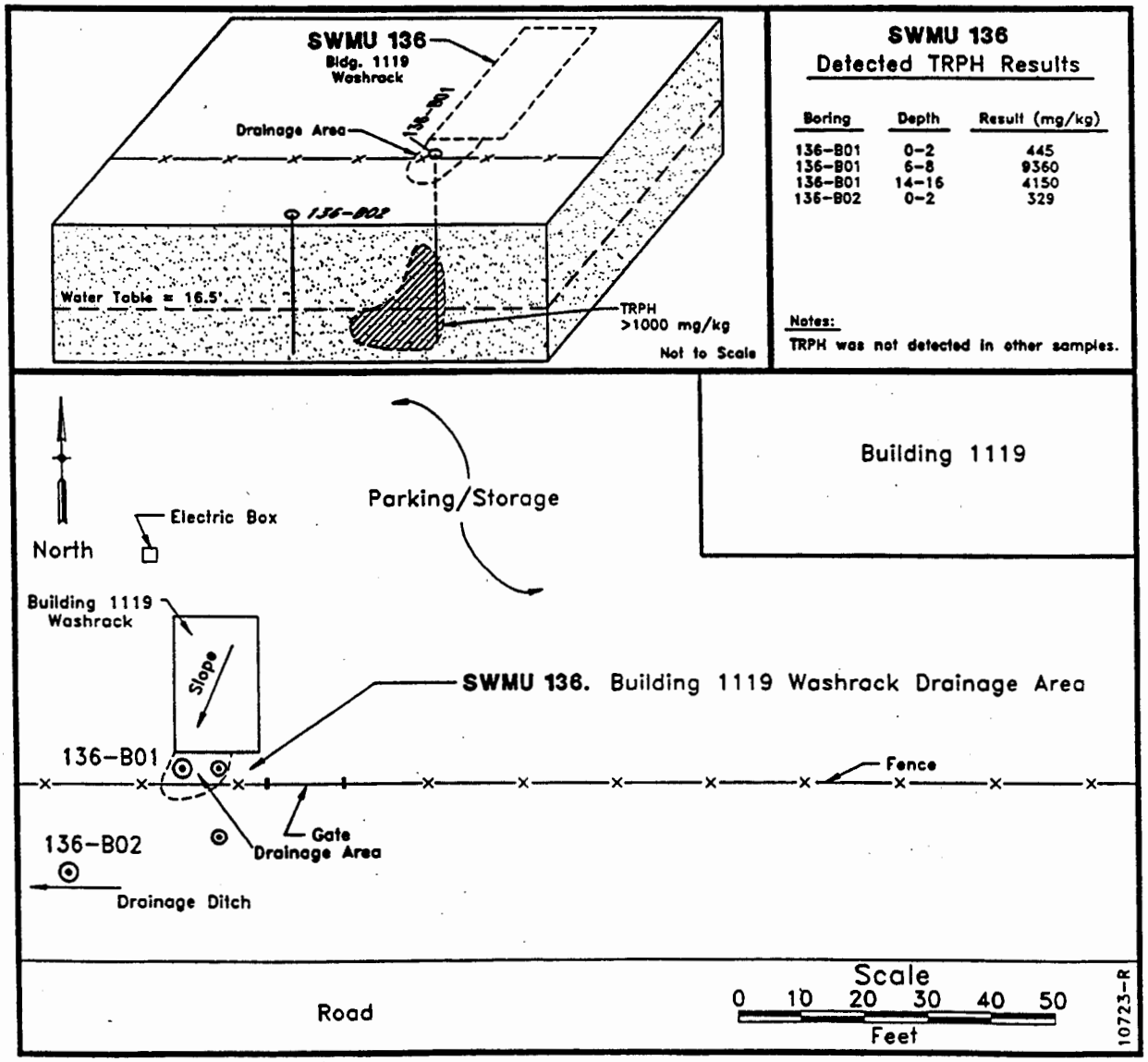

1.3 SITE HISTORY

The Building 1119 washrack was reportedly used from 1980 to 1990 for rinsing trucks and generators at the site. The rinsate from the washrack was allowed to drain to an area considered to be a drainage pit located to the south of the washrack pad. The drainage pit was covered with gravel to facilitate infiltration during washrack operations. The rinsate contained primarily waste fuel and oil. When use of the washrack was discontinued, the soil surrounding the pad was excavated to a depth of 8 feet, inspected for visible contamination, and then placed back in the excavation.

Soils at SWMU 136 consist primarily of sand and silty sand interbedded with clay lenses. Groundwater occurs at approximately 20 feet below ground level. Groundwater at this part of the Base generally flows to the west. The contamination present at SWMU 136 consists primarily of petroleum-contaminated soils that contain adsorbed-phase petroleum. Maximum concentrations of total recoverable petroleum hydrocarbons (TRPH) have been measured up to 9,360 milligrams per kilogram (mg/kg) in soil. No listed hazardous wastes have been identified at the site.

2.0 SYSTEM DESCRIPTION

Remediation of contamination at SWMU 136 will be accomplished by a bioventing system. The bioventing system is comprised of a regenerative blower, one bioventing well, and the appurtenances necessary to monitor and control the injection of pressurized air into subsurface soils. The injection of pressurized air will accelerate the biodegradation rate of subsurface contamination by supplying oxygen to the naturally occurring organisms.

2.1 MONITORING/ INJECTION WELL CONFIGURATION

One bioventing well was installed at SWMU 136. This well will be used for both air injection and monitoring. The bioventing well was constructed of 4-inch-diameter, schedule 40 polyvinyl chloride (PVC) pipe and screen placed inside of a 10-inch diameter borehole. The well was screened with 0.040-slot schedule 40 PVC from 9 to 21.5 feet below grade. The filter pack material used for packing the well casing has a 10–20 gradation. The well was sealed with a minimum 6-foot length of bentonite pellets to prevent short circuiting (escape) of the injected air via the well annulus. The bioventing well was secured with 2 feet of concrete/bentonite mixture extending from the top of the bentonite layer to the ground surface.

When monitoring is required, the air flow will first be reversed to remove approximately five well volumes from the bioventing well. Respirometry testing will then be performed using the bioventing well.

2.2 BLOWER

An EG&G Rotron DR 353 regenerative blower has been tentatively selected for the SWMU 136 bioventing system. This blower is capable of providing 50 to 70 standard cubic feet per minute (scfm) at the target discharge pressure which ranges from 0.75 to 1.25 pounds per square inch gauge (psig). An air relief valve will be needed to discharge excess air flow to the atmosphere and deliver the target air flow (0.6 to 1.0 scfm) to the bioventing well. A silencer will be installed on the excess air discharge to minimize noise.

The blower will be operated at no more than 75 percent of the manufacturer's published design capacity and will not operate at speeds exceeding 80 percent of the maximum speed. The blower will operate at no more than 3,500 revolutions per minute (rpm). The blower will be equipped with an outlet silencer and an oversized inlet filter, which will remove particles from the influent air stream that could clog or damage mechanical equipment. A manually adjustable air relief valve will also be provided on the outlet side of the blower to discharge excess air flow and adjust the air flow rate to the bioventing well.

2.3 SYSTEM PIPING

System piping will be installed abovegrade and fabricated for pressurized air service. System piping will be comprised of schedule 40 galvanized carbon steel and PVC pipe. The galvanized carbon steel pipe will be used for the short length of outlet pipe from the blower to the pressure gauge for ease of joining the valves, flowmeter, and pressure gauge. Galvanized steel pipe manufactured in accordance with American Society for Testing and Materials (ASTM) A-53 will be used for these locations. The galvanized steel piping will have male national pipe thread (MNPT) threaded ends and be joined using female national pipe thread (FNPT) coupler fittings. PVC pipe will be used for the remainder of the air distribution system. PVC pipe will extend from the blower outlet pressure gauge to the bioventing well.

2.4 INSTRUMENTATION AND CONTROLS

The blower system has instrumentation and controls that monitor the inlet filter differential pressure, system pressure, and flow rate. The blower control panels have "BLOWER RUN" and "BLOWER STOP" indicator lights. The inlet air filter has a pressure gauge (PI-100) to measure the air filter differential pressure. This gauge will be used to indicate air filter condition and to determine when the filter needs to be cleaned or changed.

The blower motor will be fitted with a run time indicator. The resulting run time information will be used to schedule and perform maintenance activities such as adding or changing filters,

lubricating oil, and bearing grease. The run time information will also be used to indicate total operational time of the bioventing system.

An air relief valve will be installed on the outlet side of the blower to vent excess air flow to the atmosphere. This is required because the blower outlet air flow will be higher than the flow rates needed for one bioventing well at the anticipated discharge pressure. The downstream flowmeter will measure the flow rate being distributed to the bioventing well. The flowmeter will be a float-type meter with an accuracy of ±5 percent of full scale. The flowmeter will be factory calibrated for the flow ranges, process temperatures, and pressure under which it is expected to operate. A flow control valve will be installed downstream of the air relief valve to adjust the air flow to the bioventing well. Two shutoff valves will also be installed to allow air flow to be stopped without having to adjust the the air relief valve or the flow control valve.

A pressure gauge (PI-102) will be also be provided at the bioventing well. The pressure gauge will be a general-duty, low-pressure, bronze-diaphragm gauge with a 4-inch diameter dial. The pressure gauge will indicate pressure from 0 to 6 pounds per square inch gauge (psig) with an accuracy of ±2% full scale.

Air flow measurements will require correction when operating conditions vary from the values for which the flow meter is calibrated. Use the following formula to correct flow meter readings:

$$\text{Corrected Flow} = \text{Scale Reading} \times \frac{\sqrt{\dfrac{(460 + T_1) \times SG_1}{12.6 + P_1}}}{\sqrt{\dfrac{(460 + T_2) \times SG_2}{12.6 + P_2}}}$$

Where: SG_1 = Scale specific gravity
SG_2 = New specific gravity
P_1 = Scale operating pressure (psig)
P_2 = New operating pressure (psig)
T_1 = Scale operating temperature (°F)
T_2 = New operating temperature (°F)

3.0 SYSTEM STARTUP AND OPERATIONAL STRATEGY

This section presents an overall startup and operational strategy for the SWMU 136 bioventing system. Monitoring of the system's physical, chemical, and biological parameters, system balancing, nutrient and moisture addition, and troubleshooting are also discussed. The intent is to provide a description of and general guidelines for successful system operation that gives the operator flexibility in operational strategy, not inflexible stepwise "how-to" instructions.

3.1 SYSTEM STARTUP

System startup consists of three steps: equipment checkout, prestartup testing, and actual startup. These steps are discussed briefly below.

3.1.1 Equipment Checkout

This is an inspection to verify that all system equipment has been properly installed. First, all equipment is checked, using engineering drawings, as-built drawings, statements of work, and manufacturer's installation instructions as references, to ensure it is in place and correctly connected. Piping and instrumentation (P&I) diagrams and electrical one-line diagrams are invaluable for verifying piping and wiring connections. Protective covers should be in place, grounding wires should be connected, and initial lubrication of the blower and motor should have been performed (if required). All piping and electrical connections are inspected to verify that connections are secure. Table 3-1 provides an equipment checkout checklist to be used.

Particular attention is paid to inspection of equipment lockouts, safety valves, pressure relief devices, and other site safety and security devices. The health and safety requirements specified in the Standard Operating Procedures (SOPs), Appendix A, and Section 4.0, System Maintenance, are implemented to ensure that all safety systems are installed and their proper operation understood.

Table 3-1. Equipment Checkout Checklist

Checklist Item	Responsible	Initials	Date
Subsurface			
Well installed per specification			
Pressure gauges/flow indicator installed			
Piping Installation			
Piping complete			
Piping cleaned			
Filters installed/cleaned			
Valves installed and operation verified			
Gauges installed on piping			
Pressure test complete			
Blower			
Pipe connections installed/tested			
Pumps and seals intact (no leaks)			
Electrical			
Grounding installed/checked			
Lighting functional			
Lockouts/covers/panels in place			
Pump rotation verified			
Disconnects in sight of unit being controlled			
Controls/alarms and interlocks functional			
Power connected to monitoring instruments			
Subsystems			
Instruments calibrated			
Safety interlocks functional			

3.1.2 Prestartup Testing

Prestartup testing entails verifying proper operation of the equipment and control systems. Control and safety systems are tested first to ensure their operation meets design and plan specifications. Table 3-2 is a functional performance checklist to be used for prestartup testing. The following paragraphs describe the testing procedure.

Table 3-2. Functional Performance Checklist

Checklist Item	Responsible	Initials	Date
Subsurface			
No piping/well air leaks			
Pressures and flow rates within expected ranges			
Blower			
Start/stop from all control mechanisms			
Operating points match pump curve specifications Flow rate vs. pressure through startup			
Current draw and voltage balance match specifications for all phases			
Support systems operate within specifications			
No excessive vibration/noise/temperature rise			
Systems			
Safety shutdown system functional			
Monitoring system/instruments hold calibration			

Prestartup testing should be performed with the air relief valve initially fully open and the flow control valve fully closed. During prestartup testing it is very important not to inject excessive air flows or pressures into the subsurface, thus avoiding soil rupture and subsequent air short circuiting. Verify proper operation of all associated blower electrical equipment and the inlet filter. Verify that all piping connections are not leaking. Make sure the air relief valve and silencer function properly. Check the inlet filter differential pressure to verify that the filter is operating properly. Check the air flowmeter and adjust the air relief valve and flow control valve until the minimum air flow is being delivered to the bioventing well. Check the well head pressure gauge to verify that the pressure is within expected ranges.

Carefully check all fittings for air leaks. If leaks are found, mark the affected area and then tighten or secure connections to eliminate the air leak. Retest the affected area after securing the connection. Verify the operation of the flow indicator and the pressure gauges. The air flow indicator and pressure gauges are factory calibrated and typically require no field calibration. However, note the response of each and, if the response seems unusual, replace the indicator or gauge.

3.1.3 Startup

Startup is the process of bringing the well head into operation and balancing the air flow and pressure to the bioventing well. Verify that the air relief valve is initially fully open and the flow control valve is fully closed. During startup it is very important not to inject excessive air flows or pressures into the subsurface, thus avoiding soil rupture and subsequent air short circuiting.

Once the blower is started and operating, the system air flow must be balanced. This is accomplished by slowly opening the flow control valve until the target flow rate (0.6–1.0 scfm) is being delivered to the bioventing well. Then, the system is allowed to equilibrate and the flow control valve is readjusted, if necessary. The blower will be selected to deliver the proper pressure at the well head. Verify that the pressure is within the target well head pressure (0.75–1.25 psig) by checking the pressure gauge on the well head.

Do not inject excessive air flow rates into the subsurface. Additional air flows above the recommended maximum of 1.0 scfm will not increase the rate of bioremediation because at this flow rate the soil will be completely oxygenated. In addition, excessive air flows may cause soil rupture and short circuiting or may unnecessarily reduce the moisture available in the subsurface soil.

It is also important that the flow control valve is never inadvertently thrown wide open, as this may result in excessive air flow into the well and subsequent soil rupturing and short circuiting.

Subsurface conditions may be slow to respond to air flow valve adjustments. Recheck air flow rate and well head pressure gauge daily. Record the flows and pressures in the Site Visitation Log (Appendix B).

Note any unusual flow or pressure values. Unusual values may be indicative of unknown subsurface flow barriers or short circuits. If unusual values are detected, consult with the design engineer for corrective action.

3.2 ROUTINE OPERATING PROCEDURES

Once the bioventing system equipment is running and the air flow rates are balanced, there are few operating requirements other than routine checks and maintenance. Operational inspections and maintenance procedures are detailed in Sections 4.1 and 4.2, respectively.

The inlet air filter should be checked daily during maintenance inspections per the manufacturer's specifications to ensure efficient blower operation. Flow and pressure data should also be logged daily on the Site Visitation Log (Appendix B). As this data is collected, make a visual check around the well head. Note and correct any deficiencies. Minor valve adjustments to maintain a balanced flow are not likely to be necessary but may be needed. If valve adjustments to maintain air balance are frequent or are significant, consult with the design engineer.

Visually inspect all equipment on the blower pad on a periodic basis. Note and correct any deficiencies. Good housekeeping will help equipment run free of trouble. Clear dust, dirt, and debris as required from the blower pad.

3.3 SYSTEM MONITORING

3.3.1 Physical Parameters

Physical parameters that will be monitored include ambient temperature, blower discharge pressure, well head air pressure, air flow rate, and differential air filter pressure. This data will be recorded daily on the Site Visitation Log (Appendix B) along with the date and time of measurement. This will provide a tracking mechanism for assistance in the interpretation of system upsets.

3.3.2 Chemical Parameters

Oxygen, carbon dioxide, methane, and hydrocarbon concentrations will be measured during respirometry tests. Respirometry will be tested monthly and measurements recorded on the Site Visitation Log (Appendix B). If bioventing continues beyond the first year, sampling may be

conducted on a quarterly or biannual cycle until it can be confirmed that cleanup goals have been achieved. The respirometry data will be used to characterize the progress of the cleanup and to determine any limitation to biological activity. See Section 3.3.3 and SOP A6, Appendix A, for additional discussion of respirometry testing.

3.3.3 Biological Parameters

The progress of the remediation will be tracked by performing monthly respirometry tests. The Site Manager will oversee the performance of the respirometry tests. The inlet and outlet connections to the blower will first be reversed and approximately five well volumes of air will be withdrawn from the well (approximately 10–15 minutes of reverse operation). The blower will then be shut down and respirometry testing will be performed using the bioventing well. The rate of oxygen decline (consumption) will be measured over a period of 1 to 5 days. The rate of oxygen decline will be used by the Project Engineer to estimate a biodegradation rate. The biodegradation rate gives a current estimate of biological activity. As the cleanup progresses and less TRPH is available for biological consumption, the biodegradation rate will decrease. This indicates cleanup progress. By comparing several biodegradation rate measurements collected over a period of time, the Project Engineer will calculate an estimate of the overall cleanup time. At the conclusion of the respirometry test, the air injection flow will be started again.

Monthly estimates of biodegradation rates will be used by the Project Engineer to estimate a cumulative quantity of degraded TRPH. This cumulative amount will be compared to the historical (initial contamination quantity) estimate of TRPH degradation. This will provide an estimate of the progress of remediation. The results of the data evaluation will be documented in the Quarterly Progress Reports (see Section 5.4).

If the measured biodegradation rate drops precipitously from one monitoring period to the next and the cumulative quantity of TRPH degraded does not match the historical estimate it is possible that the subsurface may have become deficient in biological nutrients. The Project Engineer should give careful consideration to the operating data and soil analytical results to

determine the correct course of action. Nutrient addition is not typically required at bioventing sites and is not anticipated to be necessary for SWMU 136 (Leeson and Hinchee 1995). However, in the event that the Project Engineer deems this activity necessary, Section 3.5 provides a discussion of nutrient addition.

3.4 SYSTEM BALANCING

The bioventing well at SWMU 136 will be supplied with injection air from a regenerative blower. If the measured air flow to the bioventing well deviates by more than 20 percent from the target air flow rate, system balancing will need to be performed. System balancing consists of adjusting the flow control valve when necessary to maintain the target air flow rate. At startup, system balancing will need to be performed daily until a steady state condition is achieved. After steady state is achieved, system balancing will be required less frequently.

3.5 NUTRIENT AND MOISTURE ADDITION

As discussed in Section 3.3.3, the addition of nutrients and moisture is not commonly required for bioventing systems (Leeson and Hinchee 1995). In addition, it is not anticipated that nutrients will be depleted or subsurface soils will desiccate to the point of affecting biodegradation at SWMU 136. The need for moisture addition is even more unlikely because the groundwater level at SWMU 136 is just below the bioventing soil zone. The Project Engineer will track the progress of bioventing through evaluation of the data collected during the monthly respirometry tests (see Section 3.3.3). If biodegradation drops precipitously from one month to the next and the cumulative quantity of TRPH degraded does not match the historical estimate, the Project Engineer will evaluate the necessity for addition of nutrients or moisture. Successfully adding these components to the subsurface soils (20 feet below ground surface for SWMU 136) is a complex process. Therefore, before a decision is made to add nutrients or moisture, analyses for soil moisture and nutrient content should be conducted. If these analyses show reduced levels, then the Project Engineer will develop a detailed procedure for addition of the required components, including method of introduction to the subsurface, chemicals, quantities, application rates, and duration/frequency of application. These procedures cannot be

prepared at this time because they are highly dependent upon the peculiar characteristics of the site and the results of the data collected from the respirometry tests and soil analyses. The following sections describe options for nutrient and moisture addition.

3.5.1 Nutrients

A key nutrient that may possibly limit biological activity at SWMU 136 is nitrogen. Oxygen utilization and bioremediation performance may potentially be limited by a lack of nitrogen. Nitrogen nutrient addition may be required to achieve cleanup goals.

Two possible nitrogen nutrient addition options would be gaseous injection of ammonia into the injected air stream or application of a liquid nitrogenous fertilizer to the surface. If it is determined that the biodegradation process is nitrogen deficient, an engineering evaluation of the best nutrient addition scheme will be performed.

The simplest method for nutrient addition is through application of a liquid nitrogenous fertilizer to the surface. The quantity and concentration of the fertilizer solution should be determined by the Project Engineer depending upon the nutrient depletion, quantity of nutrient needed to raise the concentration to desired levels, and the site soil transport characteristics. At the next monthly respirometry test, the biodegradation rate will be evaluated to determine the success of the nutrient addition. Additional periods of irrigation may be necessary to obtain the desired soil nutrient content. The Project Engineer will determine the quantity, application rate, duration, and frequency of application required.

The second possible method for introduction of nutrient to the subsurface is through gaseous injection of ammonia into the bioventing system air supply. This method is much more involved and would require addition of ammonia injection equipment to the system blower. In addition, this method introduces worker health and safety concerns because of the use of a hazardous substance (i.e., gaseous ammonia). If the surface irrigation method is found to be inadequate in establishing the soil nutrient level needed for biodegradation, then the Project Engineer will

evaluate the use of gaseous ammonia injection, including design specifications, feed rates, and frequency.

If analytical data indicate a deficiency in nutrients, both the liquid nitrogenous fertilizer and ammonia gas application methods will be evaluated to determine the best alternative. This evaluation will be performed by the Project Engineer.

3.5.2 Moisture

Bioventing injection air tends to dry subsurface soil. Local soils generally contain greater than 4 percent moisture; however, there is little moisture recharge in this arid setting. The sensitivity of biological activity at SWMU 136 to moisture is unknown at this time. Theoretically, the reduction in soil moisture due to bioventing will be approximately 2 percent per year; however, as little as 1 inch of infiltration per year is sufficient to replace this lost soil moisture (Leeson and Hinchee 1995). On average, Holloman AFB receives approximately 8 to 10 inches of rainfall per year which will result in an infiltration rate of more than 1 inch per year. However, if it is determined that low moisture content is detrimentally affecting bioventing performance, surface addition of water through irrigation or humidification of injected air can be performed to supply additional moisture. An engineering evaluation of the best moisture addition technique will be performed.

The simplest method for moisture addition is through application of water to the surface. Water has been added by this method at other bioventing sites in arid climates (Leeson and Hinchee 1995). In these instances, irrigation was performed for a period of 1 week, followed by 1 month of air injection. The level of surface soil saturation at SWMU 136 should be evaluated, taking into consideration evaporation of applied water to the atmosphere. At the next monthly respirometry test, the biodegradation rate will be evaluated to determine the success of the moisture addition. Additional periods of irrigation may be necessary to obtain the desired soil moisture content. The Project Engineer will determine the quantity, application rate, duration, and frequency of application required.

The second possible method for introduction of moisture to the subsurface is through injection of water into the bioventing system air supply (i.e., humidified air). This method is much more involved and would require addition of equipment to the system blower. If the surface irrigation method is found to be inadequate in establishing the soil moisture level needed for biodegradation, then the Project Engineer will evaluate the use of humidified air injection, including design specifications, feed rates, and frequency. If this method is used, the condensation of moisture downstream in the piping as it enters the lower temperature soil depths should be considered.

3.6 TROUBLESHOOTING GUIDE

Failure of mechanical components, inefficiency in the biological consumption process, and occurrence of external events (e.g., power outage) can result in system inoperation or inefficiency. The following discussions describe some of the possible problems that may require troubleshooting during system startup and operation.

3.6.1 Control Systems

Operational problems with control systems are usually caused by electrical problems in the controller, which requires a service call to the equipment supplier. The SWMU 136 bioventing system does not contain any solenoid or actuating valves that could be affected by extreme weather.

3.6.2 Blower Shutdown

Events that may trigger a blower shutdown include a power failure, overheating of the blower, or a no-flow condition caused by flow blockages. Determine the cause of the blower shutdown and perform the necessary corrective action. Section 3.6.4 contains specific information about power loss. If power failure is not the cause of the shutdown, check the system for flow blockages, including the air filter, piping, and bioventing well. If flow blockages are found, remove the blockages. If no flow blockages are found in the air filter, piping, or bioventing well, use a surge

block to clean the well screen. Also check the blower motor for bearing failure by turning the motor and noting any unusual noises or resistance to turning. If the motor bearings have failed, replace the bearings. After the necessary corrective actions have been performed, the system can be restarted.

3.6.3 Limited Biological Activity

As described in Section 3.5, biological activity at SWMU 136 may be limited by deficiencies in nitrogen or moisture. If this occurs, ammonia or water may need to be added to increase biological activity.

3.6.4 Power Loss

Power loss may be caused by many external circumstances, including power outage, inclement weather, and power line interruptions. If a power loss occurs, the blower and other electrically operated equipment will shut down and the bioventing process will be interrupted. All electrically operated equipment should be checked to ensure they are in operation following the correction of any electrical interruption. A short-term power interruption, up to several days, will not seriously affect the subsurface biodegradation. Although it is desirable to restart the system as soon as possible, a power outage should not be considered an emergency situation.

4.0 SYSTEM MAINTENANCE

Routine system O&M activities will consist of specific daily, weekly, and monthly baseline procedures that are to be followed. During the course of O&M, it is expected that other unscheduled tasks will also need to be conducted to maintain the operation of the equipment. Therefore, routine O&M procedures can be augmented by a change order prepared by the Site Manager. Routine activities are discussed in detail in the following three subsections and Appendix D, Project Record Drawings and Vendor Information.

4.1 OPERATIONAL INSPECTIONS

4.1.1 Site Visitation Log

Site visits will be conducted by an on-site technician. The primary purpose of the daily visits is to identify if the system is operating properly and to check the air filter, which, due to high amounts of airborne particulates, may require frequent cleaning. Specific daily tasks are detailed on the Site Visitation Log (Appendix B) and include the following:

- Check overall system operation and check for and remove any sand or debris from the equipment.
- Check the blower operation and collect operational data, including hours of operation, ambient air temperature, air flow rate to the bioventing well, air filter differential pressure, and blower discharge pressure.
- Check the well head and record well head pressure.
- Conduct a visual inspection to make sure that the air filter is not plugged.
- Clean or change the air filter as necessary.
- Record any parts or equipment used on the system in the comment section of the visitation log.

All data collected, including any additional comments, should be recorded on the Site Visitation Log (Appendix B). These sheets should be copied daily and added to the document files as described in Section 5.3, Data Management.

Additional O&M and/or sampling activities are scheduled for the project on a monthly or biannual basis. The purpose of the monthly visits includes conducting routine and periodic

maintenance of various components of the remediation system, and measuring gases in the monitoring wells. The purpose of the biannual site visits includes collecting soil samples for nutrient and contaminant analysis. The monthly and biannual activities are conducted in addition to the standard daily activities detailed above. Specific monthly and biannual tasks are detailed on the Site Visitation Log (Appendix B) and include the following:

- Monthly - sample oxygen, carbon dioxide, and methane gases in the bioventing well with a GA-90 gas analyzer.
- Monthly - sample hydrocarbons in the bioventing well with a Century organic vapor analyzer (OVA) model 128 or equivalent flame-ionization detector (FID) calibrated for hexane.
- Biannually - collect soil samples with a direct push technology (DPT) rig for analysis of ammonia-nitrogen, nitrate/nitrite-nitrogen, total Kjeldahl nitrogen (TKN), total iron, total phosphorous, and TRPH.

The O&M activities at other intervals include the following:

- Change motor bearings every 15,000 to 20,000 hours.

4.2 ROUTINE MAINTENANCE PROCEDURES

General system operational procedures are detailed below. Note that these procedures should only be conducted by qualified, trained personnel.

4.2.1 Weekly Routine Maintenance

- Inspect bolt tightness and tighten as necessary.

4.3 STARTUP AND TROUBLESHOOTING

This section discusses the procedures for startup and troubleshooting of the blower. Following these procedures will prevent unnecessary wear on the components of the blower and reduce maintenance costs.

4.3.1 Prestartup Checklist

The prestartup checklist (Table 4-1) is as follows:

- Check leveling and bolt tensions.

- Be certain that no bolts, tools, rags, or dirt have been left in the blower air chamber.
- Be certain that inlet piping is free of debris.
- Check drive alignment if installation is not recent.
- Turn drive shaft by hand to make sure impellers rotate without bumping or rubbing at any point.
- Be sure that power is available to the motor and that electrical overload devices are installed and functional.
- Open the air relief valve in the discharge air line. If a valve is located in the inlet piping, be sure it is open.
- Check that the flow control valve is fully closed.
- Bump blower a few revolutions with driver to check that direction of rotation is correct and that the unit coasts freely to a stop.

Table 4-1. Prestartup Checklist

Item Checked	Approved by	Date
System level		
Bolts tightened		
Blower air chamber cleared of debris		
Air filter installed		
Drive alignment		
Impeller clearance		
Electrical installation		
Impeller rotation direction		
Air relief valve open		
Flow control valve fully closed		

The no-load trial operation is to be performed as follows:

- Check that the air relief valve is fully open and the flow control valve is fully closed. This will insure that the blower is operating in a no-load condition.
- Start blower, let it accelerate to full speed, then shut off. Listen for knocking sounds, both with power on and as speed slows down.

- Repeat above procedure but let blower run 2 or 3 minutes. Check for noises and vibrations of 5 millimeters or greater.

Operate blower for about 10 minutes unloaded. Feel cylinder and headplate surfaces for development of spots too hot to touch, indicating impeller rubs. Be aware of any noticeable increase in vibration.

Procedures for the 1-hour test run under normal operating conditions are as follows:

- After blower is restarted, gradually open the flow control valve to apply working pressure and air flow to the bioventing well within the target ranges.
- Measure discharge pressure to make sure the blower is operating within its specified rating limits.
- If excessive noise or local heating develops, shut down immediately and perform troubleshooting to determine the cause.

4.3.2 Troubleshooting

The following table presents a checklist for troubleshooting the EG&G Rotron DR 353 blower.

Table 4-2. Troubleshooting Checklist

Problem	Possible Cause	Remedy*
Impeller does not turn and there is a humming sound	One phase of power line not connected One phase of stator winding open Bearings defective Impeller jammed by foreign material Impeller jammed against housing or cover	Connect Rewind or buy new motor Change bearings Clean Adjust impeller
Impeller does not turn and no sound	Two phases of power line not connected Two phases of stator winding open	Connect Rewind or buy new motor
Impeller turns and there is a blown fuse	Insufficient fuse capacity Short circuit	Use time delay fuse or proper rating Repair
Impeller turns and motor overheats or protector trips	High or low voltage Operating in single phase condition Bearings defective Impeller rubbing against housing or cover Impeller or air passage clogged by foreign material Unit operating beyond performance range Capacitor shorted One phase of stator winding short circuited	Check input voltage Check connections Change bearings Adjust Clean and add filter Reduce system pressure/vacuum Change capacitor Rewind or buy new motor
Impeller turns and there is abnormal sound	Impeller rubbing against housing or cover Impeller or air passage clogged by foreign material Bearings defective	Adjust Clean and add filter Change bearings
Impeller turns and performance is below standard	Leak in piping Piping and air passages clogged Impeller rotation reversed Leak in blower Low voltage	Tighten Clean Check wiring Tighten cover, flange Check input voltage

* Disassembly and repair of new blowers or motors will void the warranty. Factory should be contacted prior to any attempt to field repair an in-warranty unit.

4.4 CONSUMABLES AND SPARE PARTS INVENTORY

The SWMU 136 bioventing system is a simplified unit and requires minimal spare parts and consumables. The blower bearings are sealed and do not require greasing. Air filters should be on hand for general maintenance and repairs.

5.0 SAMPLING, ANALYSIS, AND REPORTING DOCUMENTATION

This section provides guidance for remediation goals, reporting, documentation, and sampling. Remediation goals for the bioventing system include the target level for remediation of TRPH at Holloman AFB (1,000 mg/kg). The sampling and analysis schedule indicates the frequency and types of sample collection. The subsection on data management and reporting provides a description of the types and formats of information to be recorded. Quality assurance (QA) procedures include the tasks to be performed to ensure the accuracy, completeness, and validity of information and data.

5.1 REMEDIATION GOALS

The Base cleanup level of 1,000 mg/kg TRPH is the remediation goal for the SWMU 136 bioventing system. The duration of system operation is dependent on nutrient and oxygen levels, which significantly affect the contaminant degradation rate. The nutrient, oxygen, and contaminant levels will be monitored through real-time monitoring of gases in the well and collection of soil samples for laboratory analysis.

5.2 SAMPLING AND ANALYSIS SCHEDULE

Sampling will include the field screening of well gases and laboratory analysis of soil samples. During respirometry testing, the bioventing well will be field screened for oxygen, carbon dioxide, and methane gases with a GA-90 gas analyzer. A Century OVA model 128 or equivalent FID calibrated for hexane will be used to monitor levels of hydrocarbons in the well for respirometry data collection. Respirometry testing will initially be performed monthly and decreased in frequency depending on variation in results. Shortly after system startup, baseline soil samples will be collected for nutrients by DPT. During long-term operation of the bioventing system, soil samples will be collected by DPT biannually, depending on system performance. These soil samples will be analyzed for nutrients and contaminants. Nutrient parameters consist of ammonia-nitrogen, nitrate/nitrite-nitrogen, TKN, iron and phosphorus. TRPH is the only contaminant and will be analyzed for each sampling event. The nutrient parameters to be analyzed will be based on the results of the previous test. Only nutrients that

may potentially be limiting biological activity will be analyzed. Decontamination water will be analyzed for volatile organic compounds (VOCs).

Ammonia-nitrogen, nitrate/nitrite-nitrogen, TKN, and phosphorus will be analyzed in accordance with the United States Environmental Protection Agency (USEPA) Methods for Chemical Analysis of Water and Wastes, methods 350.1, 353.2, 351.2, and 365.2 (USEPA 1983). Iron, VOCs, and TRPH will be analyzed in accordance with USEPA SW 846 Test Methods for Evaluating Solid Waste (USEPA 1986) methods 6010, 8260A, and 418.1, respectively. The frequency of sampling may be reduced on the basis of variation in sample results.

Table 5-1 presents the analytical method, container type (sample quantity), preservation, and holding time for the various soil and water parameters. SOP A3 (Appendix A) discusses sample depths and locations for DPT soil collection.

Procedures for calibration of instrumentation and respirometry testing are included in SOPs A5 and A6 (Appendix A), respectively.

5.3 DATA MANAGEMENT

This section provides a comprehensive guide for the management of all data generated during O&M activities. This includes analytical data, field notebooks, project files, and progress reports. This section describes how collected data will be properly handled and documented for future use. To track and document project data, the contractor will use a field notebook; daily, weekly, and monthly site visitation logs; chain-of-custody (COC) forms; sample inventories; and laboratory log books. The contractor will establish a data management plan to meet all data deliverables, which for this project does not include the requirements of the Installation Restoration Program Information Management System (IRPIMS).

Table 5-1. Sample Requirements

Matrix	Parameter	Method	Container	Preservation	Holding Time
Water	Volatile Organic Compounds	8260A	3 x 40 ml G Septa Vial	HCl to pH<2 Ice to 4°C	14d
Soil	Total Recoverable Petroleum Hydrocarbons	9071/418.1	1 x 4 oz G	Ice to 4°C	28d
Soil	Total Phosphorus	365.2	1 x 8 oz G [1]	Ice to 4°C	28d
Soil	Total Iron	6010	----------	Ice to 4°C	180d
Soil	Ammonia-Nitrogen	350.1	----------	Ice to 4°C	28d
Soil	Total Kjeldahl Nitrogen	351.2	----------	Ice to 4°C	28d
Soil	Nitrate/Nitrite-Nitrogen	353.2	----------	Ice to 4°C	28d

ml milliliter
G glass
°C degrees centigrade
d days
oz ounce
HCL hydrochloric acid

1) All inorganics are composited in one 8-oz glass jar.

There are five goals for the data management task:

- Archive project data and procedures to substantiate conclusions and recommendations drawn from the O&M activities.
- Provide timely access to an organized body of data to facilitate analysis and decision making throughout the investigation.
- Provide a useful centralized index of project information.
- Present project information in tabular and graphic form.
- Provide convenient and efficient access to project data for potential future investigation or remediation activities, if warranted.

The data management process is discussed below and addresses data and reporting requirements for O&M activities. There are multiple data streams and multiple possible end users of the data associated with the O&M of the SWMU 136 bioventing system. The data management system implemented by the contractor will be capable of accurately and quickly tracking all pertinent information associated with the O&M activities. In particular, once the contractor receives the

laboratory results and performs necessary data loading and data validation procedures, the Base will be notified within 5 working days of the nature and extent of contamination.

5.3.1 Field Data Record

A bound field notebook will be used to permanently record all field activities and general observations. All pages of the field notebook will be signed and dated by the supervising field scientist who is entering the data. Also, the names and affiliations of all visitors on site will be entered in the notebook as well as general notes on project progress, problems encountered, and deviations from plans with rationale.

Data collected during the O&M activities will be recorded on individual forms provided in Appendix B. These forms, in addition to any site maps that are generated on graph paper, will be kept in a three-ring binder. Site visitation forms will be completed during each site visit. In addition, Daily Quality Control Reports (DQCRs) will be completed and submitted daily (Appendix B).

COC records (Appendix B) will be completed to document the chain of possession and track the samples throughout shipping, handling, and analysis (SOP A1, Appendix A).

5.3.2 Field Data

Field data will include the data record (log books, site visitations, etc.) and results of field screening data. Field screening data (including results, duplicates, blanks, standards, etc.) should be recorded in a laboratory log book (similar to the field notebook) and on the site-specific data sheets provided in the appendices.

The contractor will maintain field records sufficient to recreate all sampling and measurement activities.

5.3.3 Laboratory Data

The laboratory will maintain the project-specific analytical data in hardcopy format and in electronic data files generated from instrumentation outputs. These data will include permanent records of laboratory documentation including analytical results, detection limits, analytical methods, sample preparation logs, instrument run logs, calibration data, and other related data. Both electronic and hardcopy logs will be required as part of routine data transfer. Analytical turn around time will not exceed 14 days. In addition, the contractor will provide USACE with copies of the laboratory data packages for Quality Assurance/Quality Control (QA/QC) evaluation.

5.3.4 Project Files

The contractor will maintain a project file at a single location in which copies of all project data and written communications are stored. Contents of the project file will include progress reports, field data, laboratory data, copies of maps, and all other facility description data. Copies of these data will also be provided to the Base Environmental Coordinator (BEC), as required.

The BEC will maintain a project file at Holloman AFB that contains all information and data reports regarding O&M. The contractor will provide the Base with copies of all files and documents discussed below. A subject file index will be maintained such that documents in the file may be found easily The project file will be maintained for a minimum of 5 years after the completion of the SWMU 136 bioventing system O&M.

5.3.5 Status Reports

System status reports detailing the O&M activities and results will be prepared quarterly. The quarterly status report will contain the following:

- Review of system performance data
- Calculation of monthly and cumulative contaminant removal (Metrix Report)
- Operational summary of monthly and cumulative totals of total operation time (hours)
- Maintenance summary

- Field logs, visitation logs, and DQCRs
- Summary discussion on the effectiveness of the previous month's system enhancements
- Recommendations for future system enhancement

5.4 REPORTING

Reporting will include the submittal of DQCRs and site visitation logs on a daily basis, metrix and system operation summary reports on a monthly basis, and project status reports on a quarterly basis. The metrix report will present actual accumulative costs, monthly analytical data, monthly expenditures, and monthly operational hours for each system in table format and total daily operation hours for each system in graphical format. If information is unavailable for a particular data point, this data point will be left blank; therefore, no interpolated data point will be added in lieu of actual data. The monthly system operation summary report will include field measurements, analytical results, and field notes for each system. The quarterly project status reports will be prepared to parallel the FWENC format used for previously submitted Long-Term Operations (LTO) reports. The previously submitted LTO reports contain a summary of system operations, recommended modifications, operational difficulties, and analytical results. The information from DQCRs and site visitation logs will be summarized in the project status report in lieu of including these items as appendices. In addition, the weekly LTO meeting minutes and monthly system operation summary reports will be included as appendices to the quarterly project status report.

5.5 QUALITY ASSURANCE

Quality assurance will be performed to ensure the validity, completeness, and accuracy of reporting data. The reporting data, which include analytical results, DQCRs, site visitation logs, and log book entries, will be reviewed for correct formatting and completeness. Laboratory reports will be reviewed for accuracy and validity of analytical data. An evaluation of the quality control data associated with the project-specific data will be performed to ensure laboratory and method precision and data completeness.

5.6 QUALITY OBJECTIVES

5.6.1 Data Quality Objectives (DQOs)

Sampling and analysis will be conducted to evaluate the effectiveness of the bioventing system and to determine the proper disposal options for decontamination water generated during remedial activities.

5.6.2 Analytical Support Levels

The analytical support levels for the SWMU 136 bioventing system will include screening level and definitive data as determined by the project DQOs. Screening level data will be generated from the on-site screening of well gases using a GA-90 and Century OVA model 128 for determination of TRPH and respirometry. Definitive data will be generated by the off-site analytical laboratory for the analysis of soil for TRPH and nutrients and for the VOC analysis of the decontamination water.

5.6.3 Data Quality Indicators

Laboratory precision and accuracy data and reporting limits are provided in Appendix C.

5.6.4 Level of Field Quality Control Effort

One soil sample per sampling event will be collected and sent to the off-site laboratory as a field duplicate to assess sampling and analytical precision. Decontamination water samples will be packaged together and shipped to the off-site laboratory with one trip blank to be analyzed for VOCs.

One soil sample per sampling event will be collected and sent to the Missouri River Division laboratory as a quality assurance replicate. The sample will be analyzed for TRPH and the nutrient parameters listed in Table 5-1. The Laboratory Information Management System (LIMS) number will be written on all COC forms accompanying samples being shipped to the Missouri River Division laboratory.

5.7 SPECIAL VALIDATION

Laucks Testing is validated by USACE - Missouri River Division to perform the analytical procedures delineated in this project. All contact with Laucks will be made to the following address:

Laucks Testing Laboratories, Inc.
940 S. Harney Street
Seattle, WA 98108
Phone: (206) 767-5060
Attn: Ms. Karen Kotz

6.0 WASTE MANAGEMENT PROCEDURES

Investigation-derived waste (IDW) generated during the O&M field activities will be handled in accordance with applicable New Mexico and federal regulations as discussed in Section 6.1, Waste Characterization Requirements.

6.1 WASTE CHARACTERIZATION REQUIREMENTS

The waste streams expected to be generated during the O&M activities will consist of decontamination water, personal protective equipment (PPE), TRPH-contaminated soil, and used equipment. Waste minimization techniques will be employed where possible to reduce the quantity of waste generated. Waste characterization will primarily be based on documented process knowledge. Deconamination water will be directly sampled and analyzed to ensure that it meets discharge standards.

6.1.1 Regulatory Requirements

Project activities are expected to generate nonhazardous wastes. Hazardous wastes are not expected to be generated at the site based on results of previous analytical data (FWENC and Radian 1994). However, if hazardous constituents are identified in the decontamination water samples, waste streams will be managed accordingly. The following federal and state regulations must be complied with during implementation of planned project activities:

- 40 Code of Federal Regulations (CFR) Parts 190–256 USEPA Regulations for Solid Waste
- 40 CFR Parts 260–299 USEPA Regulations for Identification and Management of Hazardous Waste
- 49 CFR Parts 100–178 Department of Transportation (DOT) Rules For Hazardous Materials Transport
- New Mexico Solid Waste Management Regulations (SWMR)
- New Mexico Water Quality Control Commission Regulations

As previously indicated, the purpose of this project is to achieve site closure objectives through bioventing of subsurface soils to reduce petroleum contamination to required levels while minimizing air emissions in a timely and cost-effective fashion. The following information is

provided in reference to management and disposal of waste streams generated as part of the O&M during remedial activities.

Holloman AFB has reached an agreement with New Mexico Environmental Department (NMED) that NMED groundwater standards are applicable to any discharge of water to the ground and a Notice of Intent (NOI) to discharge is not required provided that the water discharged meets the NMED groundwater discharge standards.

Table 6-1 summarizes the NMED groundwater discharge standards applicable to discharges of water at Holloman AFB.

Table 6-1. Groundwater Discharge Standards at Holloman AFB

METHOD	PARAMETER	WATER CONCENTRATION (mg/L) (1)
USEPA Method 8260A: Volatile Organic Compounds	Benzene	0.01(2)
	Toluene	0.75
	Carbon Tetrachloride	0.01
	1,2 - Dichloroethane	0.01
	Ethylbenzene	0.75
	Total Xylenes	0.62
	Methylene Chloride	0.1
	Chloroform	0.1
	1,1 - Dichloroethane	0.025
	1,1 - Trichloroethane	0.06
	1,1,2 - Trichloroethane	0.01
	1,1,2,2 - Tetrachloroethane	0.01
	Vinyl Chloride	0.001

(1) Mew Mexico discharge standards (2) Toxicity characteristic regulatory level for Benzene is 0.5 mg/L
mg/L milligrams per liter

New Mexico Special Waste Regulations (EIB/SWMR-4) apply to solid wastes that have unique handling, transportation, or disposal requirements to ensure protection of the environment and

the public's health and safety, e.g., contaminated soils. New Mexico defines petroleum contaminated soils as Special Waste if the sum of benzene, toluene, ethylbenzene, and xylene (BTEX) isomer concentrations is greater than 500 mg/kg, with benzene individually greater than 25 mg/kg, and a TRPH concentration greater than 1,000 mg/kg. Based on previous analytical results for soil samples, the BTEX and benzene concentrations are expected to be below those noted above. However, TRPH has been found in the soil samples at concentrations higher than 1,000 mg/kg. Also, based on previous analytical results, the contaminated soils are not expected to be classified as a hazardous waste.

Special Waste must comply with the following requirements:

- Special Wastes must either be treated prior to disposal and/or isolated in their disposal to ensure a minimum of exposure to the public.
- All Special Waste must be disposed only at solid waste facilities permitted for disposal of Special Waste.
- All Special Wastes must be manifested in accordance with Sections 702c and 712 of the New Mexico Special Waste Requirements Regulations.
- Storage of Special Waste will occur only at an approved Special Waste storage area.
- Special Waste will be stored for no longer than 45 days, unless approved in advance by NMED.
- All containers of Special Waste to be stored or disposed will be clearly labeled, indicating the contents and potential health, safety, and environmental hazards associated with the waste.
- The physical and chemical characteristics of all Special Wastes will be documented prior to storage, transportation, or disposal, by means of the following:
  - Records of the results of analysis performed in accordance with Section 704, as applicable, or the use of detailed process knowledge.
  - Detailed descriptions of the generator's knowledge of specific wastes.
  - Transporters of any type of waste must be registered.

6.1.2 Anticipated Waste Streams

The anticipated waste streams associated with SWMU 136 bioventing system O&M activities can be categorized as follows:

- Used equipment
- Decontamination water used to decontaminate field equipment
- PPE

- TRPH-contaminated soil

In addition to the waste descriptions below, Table 6-2 presents detailed waste management, transportation, and disposal requirements for each waste category.

6.1.3 Waste Descriptions

The following descriptions pertain to used equipment, decontamination water, and disposable PPE.

6.1.3.1 Used Equipment

There is one filter mounted on the blower intake. This filter is used to prevent damaging airborne particulates from entering the blower through the air intake. Because of the high quantity of airborne particulates in the area, cleaning of the filter will be frequently required. Filters will be disposed when they become unsuitable for reuse.

Spent filters will be placed in sealed plastic trash bags (double bagged) and disposed as nonhazardous solid waste. The filters will be placed in a dumpster designated by Base personnel.

6.1.3.2 Decontamination Water

Equipment will be decontaminated as described in this SOP A2, Appendix A. Decontamination water will be containerized in drums or tanks and will be sampled, analyzed, and characterized prior to disposal. If decontamination water analysis indicates that no hazardous waste is present and the water meets NMED groundwater discharge standards, it can be discharged to the ground. If the analysis indicates that constituent levels are above NMED groundwater standards and that the

Table 6-2. Waste Management Requirements

Waste Types	Characterization Requirements	Applicable Regulations	Allowable Containment	Storage Requirements	Transportation Requirements	Disposal Requirements
Soil	Use laboratory results on DPT soil samples to determine whether DPT soil cuttings are a NMED Special Waste.	40 CFR 268.48 - Land Disposal Restriction (LDR) - Universal Treatment STDs (UTS) 40 CFR 262 - Generator STDs. EIB/SWMR-4 Part VII - "Special Waste Requirements" Sections 701, 702, 703, 704, 708, and 712. Petroleum-contaminated soil (PCS).	Can be stored temporarily on-site in a bermed area on an impermeable liner, then covered in a manner that will not contaminate environmental media, i.e., air, soil, groundwater, and surface water.	Maximum on site storage allowed is 45 days for PCS. Storage clock starts from the date that waste is first put into the container.	PCS shipped off site must be accompanied by a NMED Special Waste manifest. Containers must be labeled indicating contents and the potential health, safety, and environmental hazards associated with the waste. Transporter must be registered to haul PCS.	PCS can only be disposed at an approved solid waste facility authorized for Special Wastes. PCS containing free liquid cannot be sent to a landfill. PCS must pass the paint filter test before it can be landfilled.
Used Equipment	Used equipment such as filters and piping will be handled as a solid waste (SW) with no analysis required.	EIB/SWMR - 4 "Solid Waste Management Regulations." 40 CFR 262 - Generator Standards.	Used equipment such as filters will be double bagged. Piping will be cut to manageable lengths and put in Base-designated dumpsters.	Used equipment such as filters will be disposed on the day of accumulation.	None.	If not a HW, dispose of filters and piping in a designated Base dumpster.
Decon Water	Need to determine whether decontamination water is a hazardous waste (HW) and if it meets NMED groundwater discharge standards. Run a VOC analysis using EPA 8260A.	EIB/HWMR-7 Part II.201 and Part III.301 - "Identification & Listing of Hazardous Waste" and "Stds. Applicable to Generators of Hazardous Waste."	DOT-approved 55-gal. (bunghole-type) metal drums (1A1) or DOT-approved portable tanks (DOT 51,52, 53, 56, 57, and 60). Drums must be sealed when not being filled/unloaded.	90-day storage limit if determined to be a HW. Must be labeled with a completed HW label. Storage clock starts from the date that waste is first put into the container if it is a HW.	HW manifest DOT placarding if determined to be a HW. Must use an USEPA-permitted transporter. Must also have LDR certifications as necessary. Individuals involved in overseeing or shipping hazardous materials must meet HM-181 & HM-126F training requirements.	If meets NMED discharge standards, may discharge to ground. If not a HW, may dispose of into Base's WWTF or to a designated wastewater treatment unit, i.e., an O/WS approved in advance by Base personnel. If a HW, must be disposed at an approved RCRA TSDF having been approved CERCLA off-site waste. RAA must approve TSDF and transporter prior to shipment of waste.

Table 6-2. Waste Management Requirements

Waste Types	Characterization Requirements	Applicable Regulations	Allowable Containment	Storage Requirements	Transportation Requirements	Disposal Requirements
PPE	Will be decontaminated and handled as a SW with no analysis required.	EIB/SWMR - 4 "Solid Waste Management Regulations."	Double plastic bags.	Once bagged, keep separate from other waste.	None	If not a HW, dispose at approved landfill.

Note: See List of Acronyms for definitions.

decontamination water is not a hazardous waste, it will be discharged to the Base wastewater treatment facility (WWTF). An alternate disposal method would be to discharge the decontamination water at a designated oil/water separator (O/WS) or to the Holloman AFB wastewater treatment facility if the system is on line and the discharge is approved by Base personnel. Although not anticipated, wastewater that is characterized as a hazardous waste will be disposed at an approved off-site, fully permitted Resource Conservation and Recovery Act (RCRA) Subtitle C Treatment, Storage, and Disposal Facility (TSDF).

6.1.3.3 Personal Protective Equipment

Protective clothing and sampling equipment is typically collected on a daily basis in plastic garbage bags and disposed in a drum or storage container dedicated for this type of waste. PPE worn by observers or other site personnel who do not come into any contact with contaminated media can be disposed as domestic waste. PPE, clothing, and/or miscellaneous sampling equipment will be properly decontaminated and managed as nonhazardous waste.

6.1.3.4 Contaminated Soil

Contaminated soil will consist of soil cuttings from DPT samples. Any extra soil from DPT sampling will be stored temporarily on site on an impermeable liner and covered in a manner that will not contaminate environmental media, i.e., air, soil, groundwater, and surface water. If laboratory analysis results indicate that the soil contains more than 1,000 mg/kg TRPH, the soil will be disposed of at a disposal facility approved for Special Waste disposal.

6.1.4 Waste Characterization/Classification

To determine proper waste management requirements for waste generated during remedial activities, hazardous waste characterization is necessary. Wastes are determined to be characteristically hazardous on the basis of their chemical constituents or physical properties. Listed wastes are specifically identified in 40 CFR 261 Subpart D. Based on process knowledge and existing supporting data, as established in the SWMU 136 RCRA Facility Investigation (RFI), no hazardous constituents have been identified in soil in excess of site screening levels or

established background levels with the exception of TRPH contamination (FWENC and Radian 1994).

The RFI data indicate that there are no potentially hazardous analytes of concern present at SWMU 136. An analysis performed according to USEPA method 8260A for VOC constituents will be used to characterize decontamination water to determine whether the water can be discharged on site or whether it has to go to theWWTF.

Waste testing necessary to characterize and manage wastes generated during remedial activities has been reduced by using RFI- and construction-generated analytical data. Consequently, testing requirements for hazardous waste and Special Waste classification have been established to include the following testing protocols:

- VOCs - for decontamination water (USEPA Method 8260A for VOC constituents)

Documentation of all proposed waste classifications will be provided to Holloman AFB.

6.1.5 Hazardous Waste Management

As discussed previously, hazardous wastes are not anticipated to be generated at SWMU 136. If hazardous wastes, suspicious odors, color, etc. are noted, wastes will be managed in accordance with federal and New Mexico Hazardous Waste Management Regulations (HWMR).

6.1.6 Waste Containerization and Storage

Container selection will be performed by DOT-trained personnel and will be based on type and quantity of waste to be generated. Containers may include either DOT-specification drums or rolloffs for regulated hazardous material.

Prior to starting remedial activities, the FWENC Site Manager will, in conjunction with Holloman AFB personnel, select areas for the temporary staging and storage of decontamination water.

Waste material must be classified according to USEPA and DOT criteria prior to affixing labels. Upon classification, the regulatory specialist will direct the application of appropriate hazardous/nonhazardous waste and DOT labels, complete with proper information specific to each waste stream. Each container will be marked and labeled as required by USEPA and DOT, if applicable. All DOT functions will be conducted by trained personnel as required by 49 CFR 172 Subpart H.

At the time of generation, all waste containers will be labeled, using indelible ink, with the following information:

- Source and location
- Contents and quantity of material in the container
- Potential health, safety, and environmental hazards
- Accumulation start date (the date the first drop of material was placed in the container)
- Date container sampled
- Parameters analyzed for
- "ANALYSIS PENDING"

Containers determined to contain hazardous waste will immediately be labeled with a completed commercial USEPA "HAZARDOUS WASTE" label, which will include the accumulation start date and other requested information.

All hazardous waste will be stored on wooden pallets in DOT-approved containers at the Holloman AFB 90-day storage facility or the Defense Reutilization and Marketing Office (DRMO). The area will be secured with a standard Holloman AFB chain link fence, and signs reading "DANGER-UNAUTHORIZED PERSONNEL KEEP OUT" will be posted at the entrance and on all sides of the enclosure. An inventory of waste containers will be maintained for later submittal to and inspection by the USACE and Holloman AFB.

Containers of hazardous waste will be inspected and logged weekly while the field work is in progress. Inspection will encompass evaluation of proper labeling, secure closure, the condition of each container, number of containers, and the condition of the storage area. Any signs of

deterioration, leaking, or dents will be noted, and containers will be immediately overpacked, if necessary. Standing water will be removed from the containment area as necessary. Inspection results will be provided to the USACE and Holloman AFB. The containers will be transferred over to Holloman AFB after waste characterization, as defined in this section.

All containers will be checked to ensure labels and markings are in good condition. DOT information for hazardous materials, including proper shipping descriptions and hazard class labels, will be added prior to shipping.

Hazardous waste will be disposed by sending it to either the Holloman AFB 90-day storage area or the DRMO RCRA storage facility or to an off-site TSDF that has been approved by the Base and USACE.

6.1.7 Documentation

The information contained in this section applies to all waste managed during environmental data collection activities. Field records will be kept of all disposal activities. The logs and records will include the following information as required for the type of waste generated:

- Description of generating activities
- Location of generation (including depth, if applicable)
- Type of waste
- Date and time of generation
- Date and time of disposal of each type
- Disposal location of each type
- Disposal method and description of any waste sampling, including:
  - Type of test
  - Laboratory where sample is to be sent
  - Sampling method
  - Name of sampler
- Name of person recording information
- Name of field manager at time of generation and at time of disposal

- Test results
- Inspection logs
- Waste documentation, including:
  - — Waste profile sheets
  - — Land Disposal Restriction (LDR) certification
  - — Hazardous waste manifest
  - — Trip tickets or bills of lading
  - — Copies of any state or local permits or approvals

Transportation

Transportation documentation will comply with DOT regulations (49 CFR 100-178) and will be prepared by personnel trained according to the requirements of HM-181 and HM-126F (DOT 1982, 1992).

Containers will be marked, labeled, and/or placarded prior to off-site transport. TSDF waste profile sheets, LDR notifications, waste manifests, and shipping documents will be prepared, if necessary, for Holloman AFB officials to review and sign.

All waste transporters used for Holloman AFB projects will be registered with NMED and approved in accordance with FWENC procedures for TSDF and transporter approval.

6.2 TRAINING/CERTIFICATION REQUIREMENTS

This section presents the DOT training and certification requirements for personnel involved in the remediation project. In addition, all employees will be trained in FWENC's Compliance Policies and Procedures to ensure that they are familiar with the program. These policies and procedures meet Department of Justice requirements for a sound environmental management program. Occupational Safety and Health Administration (OSHA) training and certification requirements are detailed in Section 9.8, Training and Communication.

All personnel who perform or oversee DOT-related activities must be DOT trained. DOT training records will be maintained in project files on site. A copy of the DOT training records should also be sent to the compliance officer for the regulatory compliance files.

7.0 CONTINGENCY PLAN

7.1 SYSTEM MODIFICATIONS

Most bioventing system modifications are made because air movement is not occurring at the target level or the equipment is not functioning as designed. In addition, if respirometry testing shows limited biological activity, nutrients may be added or modifications to the flow rate may be necessary. Flow rates may be modified by partially closing the flow control valve. If a system modification is determined to be necessary, then the problem should be documented, an analysis conducted to determine the solution, and approval for modification obtained from the on-site System Engineer, Dino Bonaldo. The on-site System Engineer will also have access to the FWENC home office support staff to aid in determining what modifications are needed.

7.2 CRITERIA FOR TRIGGERING CORRECTIVE ACTIONS

If determined to be necessary, nutrients (nitrogen and phosphorous) may be added at the sites to facilitate microbial growth to promote biodegradation. Nutrients may be added via surface liquid application or gaseous subsurface injection using the blower. Specific requirements for nutrient addition and sampling are addressed in Section 3.5. One criterion for making this decision is a dramatic decrease in biodegradation rates that is not the result of depleted petroleum.

8.0 SYSTEM SHUTDOWN AND CONFIRMATION OF CLEANUP

8.1 SHUTDOWN STRATEGY

After 1 year of operation, subsurface soil test samples will be collected to document in situ remediation progress and assess continued operational requirements. If bioventing continues beyond the first year, sampling may be conducted on a quarterly or biannual cycle until it can be confirmed that cleanup goals have been achieved (Section 4.0, FWENC 1996). The cleanup goal for SWMU 136 is 1,000 mg/kg residual TRPH.

8.2 CONFIRMATION SAMPLING REQUIREMENTS

To verify that cleanup criteria have been achieved, confirmatory soil sampling will be performed. The sampling will follow the procedures described in Section 5.0 and Appendix A. Soil samples will be collected by DPT. The samples will be analyzed for nutrients and TRPH using the analytical methods specified in the Section 5.0 and results will be verified using the contract standard QA/QC procedures. The results of the sampling analyses will be compared to the cleanup criteria (1,000 mg/kg residual TRPH) to determine if remediation has been achieved.

8.3 SYSTEM SHUTDOWN CHECKLIST

There are three ways the system may be shut down: (1) emergency, which may result from power loss or equipment failure; (2) maintenance shutdown; and (3) remediation shutdown. When the system is shut down, it is important to check the systems to minimize hazards, to ensure proper operation, and to aid in future decontamination of equipment and remediation areas. The steps that should be taken for each of the three types of shutdown are described below.

8.3.1 Emergency Shutdown

If the system is automatically shut down, it should be carefully checked before being returned to operation to determine the cause of the shutdown. The system should be inspected for broken/failed equipment, upgradient or downgradient blockages, and electrical power failure. Sections 3.6.2 and 3.6.4 contain specific information on determining the cause of a blower

shutdown. After all necessary corrective actions have been taken, the system can be restarted but should be monitored for problems.

8.3.2 Maintenance Shutdown

If the system is intentionally shutdown, subsystems should be checked. Decontamination of the system can lessen exposure problems during maintenance and dismantling of equipment. Steps include the following:

- Shutting down blower
- Closing isolation valves
- Disconnecting electrical power to equipment
- Logging the event in the field log book

Once the system has been safely shut down, maintenance activities, as described in Section 4.0, can be conducted.

8.3.3 Remediation Shutdown

If the SWMU 136 area is determined to meet the cleanup goal and remediation is completed, final shutdown may begin. The well can be fitted with a well head valve. Final shutdown of the system should follow the same procedures as those stipulated for maintenance shutdown and should include system decontamination prior to removal of system equipment.

8.4 CLOSURE REPORT

Once remediation has been completed, a closure report will be prepared to verify and document the activities and results of the remediation at SWMU 136. The report should contain the following:

- Review of system performance data
- Calculation of cumulative contaminant removal
- Documentation of the cleanup, including results of the respirometry testing and confirmatory soil sample analyses
- Recommendation for closure

9.0 SITE HEALTH AND SAFETY REQUIREMENTS FOR O&M ACTIVITIES

9.1 PERSONNEL AND RESPONSIBILITIES

On-site Personnel:

Team	Project Title/Assigned Role	Phone Numbers
Dan Holmquist	Site Manager	(505) 479-2668
Dave Rizzuto	Task Supervisor	(505) 479-2668
Dave Rizzuto	Site Safety and Health Officer	(505) 479-2668

Other Project Personnel:

Name	Project Title/Assigned Role	Phone Numbers
Sina Seyedian	Project Manager	(303) 988-2202
Andrew Strickland, CIH	Project Health and Safety Manager	(303) 988-2202 or (800) 549-9389 (pager)
Ron Versaw	Delivery Order Manager	(303) 988-2202

9.1.1 Roles and Responsibilities

The roles and responsibilities of site and home office personnel are addressed in the Final Basewide Health and Safety Plan (EBASCO 1995).

9.2 HAZARD ANALYSIS

Job safety analysis (JSA) is used to identify hazards associated with job tasks. The Basewide Health and Safety Plan has several JSAs applicable to the tasks associated with long-term operations for the O&M of the SWMU 136 bioventing system (EBASCO 1995).

The Site Safety and Health Plan (SSHP) contains JSAs (Table 9-1) for potential hazards that may be encountered while engaging in site-specific tasks for this project that are not addressed by the Basewide Health and Safety Plan. The Site Health and Safety Officer (SHSO) will inspect the site to ensure that all of the tasks conducted at the site are performed according to the JSAs. Additional JSAs can be added in the future as an amendment to this document to address any unexpected or unforeseeable hazards. The minimum PPE required for job tasks is work clothes; however, upgrades may be necessary based on dermal or inhalation exposure potential (Table 9-2). The site and safety requirements of this document will be periodically reviewed by the Project Manager, SHSO, and the Project Health and Safety Manager (PHSM) to determine if

Table 9-1. Job Safety Analysis

Activity	Potential Hazards	Recommended Control Measures
Routine Maintenance, Operation, or Repair -- No contact with contaminated liquids, solids, or other hazardous chemicals.	Improper lifting	Controls include: • Design of work flow to minimize manual lifting and minimize distances load area carried. • Lift heavy or awkward loads using a mechanical lifting device or ask other individuals for help. • Provide training in proper lifting technique.
	Struck by equipment	Controls include: • Use a spotter to direct equipment movement.
	Slips, trips, and falls	Controls include: • Keep work area clean and orderly at all times. Regularly dispose of all debris. • Use guard rails or other appropriate fall-protection systems for all work activities that take place 6 feet or more above the next working surface.
	End running or rotating nip or pinch points	Controls include: • Only use equipment for which machine guarding is provided for all belts, pulleys, fly wheels, or other potential end running or rotating nip or pinch points.
	Electrical	Controls include: • Adequately cover all electrical contacts. • Before exposing or working on electrical systems, de-energize and lock out in accordance with HS 6-5[1]. • Do not perform maintenance procedures requiring voltage or amperage measurements of live systems unless you are a Competent Person. Currently, only Dave Rizzuto is approved to perform this work. • De-energize and lock out all equipment in accordance with HS 6-5[1] prior to removing the machine guards for any purpose.

Table 9-1. Job Safety Analysis

Activity	Potential Hazards	Recommended Control Measures
	Noise	Controls include: • Use hearing protection when performing work activities inside the fenced areas.
	Heat Stress	Controls include: • Training in hazards of heat stress. • Provide adequate supplies of cool drinking water or electrolyte drinks. • Implement buddy system. • Take breaks in shaded areas as necessary.
	Fire	Controls include: • NEC/NFPA-approved electrical and mechanical components as required by the design specifications. • Complete training in the use of fire extinguishers. • Use fire extinguishers on small fires. • Coordinate emergency response procedures with the Fire Department. • Store all flammable liquids in accordance with 29 CFR 1910.106. • Only use bonded and grounded containers to transfer flammable liquids. • Only use UL- or FM-approved fuel storage cans used for gasoline or diesel.
	Cuts, abrasions, contusions or burns	Controls include: • Use hand tools for the job they were designed. • Wear leather gloves as appropriate. • Be aware of and avoid hot surfaces.

Table 9-1. Job Safety Analysis

Activity	Potential Hazards	Recommended Control Measures
Routine Maintenance, Operation, or Repair -- Potential for contact with hazardous liquids or solids	All Potential Hazards addressed above are applicable	Controls include: • See control measures for all hazards above.
	Exposure to contaminated groundwater	Controls include: • PPE as required by Table 9-2 • Air monitoring as required by Table 9-3. • Decontamination as required by Section 9.4.
	Exposure to TRPH	Controls include: • PPE as required by Table 9-2. • Air monitoring as required by Table 9-3. • Decontamination as required by Section 9.4.
	Exposure to oils, lubricants or greases	Controls include: • PPE as required by Table 9-2. • Air monitoring as required by Table 9-3 • Decontamination as required by Section 9.4.

1 - Procedure contained in Foster Wheeler Environmental Corporation's Health and Safety Program Manual (FWENC 1995)

Table 9-2 PPE Requirements

Activity	Required PPE
Routine maintenance, operation, or repair activities: no contact with contaminated liquids or solids.	• Work clothing (sleeved shirts, long pants) • Hard hat • Safety glasses • Steel-toed work boots • Hearing protection in identified high noise area when systems are operating • Leather or cotton gloves optional
Routine maintenance, operation, or repair activities: potential contact with contaminated liquids or solids and soil-sampling activities.	• Work clothing (sleeved shirts, long pants) • Hard hat • Safety glasses • Steel-toed work boots • Hearing protection (see above) • Nitrite gloves • Respirator equipped with combination organic vapor/HEPA cartridge in accordance with Table 9-3 – Level C • Tyvek coveralls if contact extends to areas of the body–Level C

changes are needed. If any of these changes are due to a change in the scope of work of this project and/or site conditions, this section will be amended in writing on the Field Change Request Form, provided in the Basewide Health and Safety Plan and approved by the PHSM.

9.2.1 Chemical Hazards

The only waste contaminant identified in groundwater or soils at the site is TRPH. The toxicological information regarding this compound is provided in subsequent text.

Exposure to TRPH may produce irritation of the upper respiratory tract, skin, eyes, and mucous membranes. Overexposure may also result in the depression of the central nervous system. Symptoms of such exposure include drowsiness, nausea, headache, fatigue, and drunken-like behavior. Some constituents of TRPH, such as benzene, have been determined to be carcinogenic, targeting blood-forming organs and bone marrow.

It is unlikely that site activities will generate significant quantities of airborne vapors in open or well ventilated spaces. Therefore, the inhalation exposure potential is expected to be less than the OSHA Permissible Exposure Limit (PEL) or the American Conference of Governmental Industrial Hygienist threshold limit values (TLV) for TRPH constituents.

Repeated skin contact with the contaminants or contaminated soils can cause skin and mucous membrane irritation and dermatitis depending on duration of exposure and the employee's personal hygiene habits. Employees will be provided chemical protective gloves as necessary and encouraged to follow good personal hygiene habits while performing O&M activities at SWMU 136.

9.2.2 Physical Hazards

A Competent Person must perform frequent and regular inspections of the site, materials, and equipment in accordance with 29 CFR 1926.20 to identify site hazards. All personnel on site should be provided with the information and training necessary to avoid accidental injury. This includes assuring that the site is maintained in such a way that slip, trip, and fall hazards are recognized and eliminated or controlled. Basic PPE (steel-toed boots, hardhats, and safety eyewear) must be available and its use enforced.

9.2.2.1 Electrical

Electrical work will not be performed on or near energized lines or equipment without prior client approval. All electrical work will be performed in compliance with EM 385-1-1 (USACE 1996).

OSHA and USACE (EM 385-1-1) regulations require that employees who may be exposed to electrical equipment be trained to recognize the associated hazards and the appropriate control methods. All extension cords used for portable tools or other equipment must be designed for hard or extra usage and be (three-wire) grounded.

All 120-volt, single-phase 15- and 20-ampere receptacle outlets on construction sites and other locations where moisture/water contact may occur must be equipped with ground fault circuit interrupters (GFCI) units. GFCI units must be attached directly to or as close as possible to the receptacle because only the wiring plugged into the GFCI and outward will be protected by the GFCI.

Whenever conducting maintenance on electrical equipment, lockout/tagout procedures to isolate the unit and all associated equipment must be used. Site-specific lockout/tagout procedures are presented in the Basewide Health and Safety Plan, and in Foster Wheeler Environmental Corporation Health and Safety Procedure HS 6-5 (FWENC 1995).

All temporary lighting lamps for general illumination must be protected from accidental breakage. Metal case sockets must be grounded.

All electrical equipment (tools, lights, extension cords, etc.) must be visually inspected prior to use. Equipment which could expose personnel to electric shock must be removed from service.

9.2.2.2 Fire and Explosion

The possibility of flammable materials being encountered during field activities must be recognized and the appropriate steps necessary to minimize fire and explosion must be observed. This includes situations where excessive organic vapors (sustained readings 500 units on a photoionization detector [PID] or FID) or free product are encountered. When this occurs, monitoring with a combustible gas indicator (CGI) is required.

If vapor concentrations are likely to be in the flammable ($\geq$ lower explosive limit [LEL] $\leq$ upper explosive limit [UEL]) range the following requirements apply:

- If forced (mechanical) ventilation is used, all such equipment must be approved for Class I, Division I hazardous atmospheres. The blower must be positioned to blow across the source so that gases and vapors may be diluted as they exist. Do not attempt to suck out the gases or vapors. Blowers, all other mechanical equipment, and tools which could release sparks or static electricity must be bonded and grounded.
- The atmosphere surrounding the source must be frequently monitored using direct reading instruments approved for Class I, Division I hazardous atmospheres. Monitoring should be conducted within 1 to 2 feet of the source.
- If combustible gas levels equal or exceed 10 percent of the LEL, when monitored as described above, operations should be immediately shut down and the area evacuated until appropriate control measures have been implemented and levels have been resampled and verified safe for reentry.
- Regardless of actual instrument readings, if all sources of ignition cannot be controlled, operations should be immediately shut down and the area evacuated until ignition sources have been eliminated. Ignition sources include, but are not limited to: smoking, static electricity, lighting, open flames, spontaneously ignitable substances, frictional heat or sparks, hot surfaces, radiant heat, electrical sparks, stray currents, cutting and welding, and ovens, furnaces and heating equipment.

- In situations where flammable solvents are used for O&M activities, the following precautions must be observed: Keep flammable and combustible materials away from heat, sparks and open flames. Do not smoke around flammable or combustible materials. Keep all flammable and combustible liquids in approved and properly labeled safety containers.
- At least one 10-pound ABC fire extinguisher must be located within 100 feet of each work area.

9.2.2.3 Heat and Cold Stress

Overexposure to temperature extremes can represent significant risks to personnel if simple precautions are not observed. Typical control measures designed to prevent heat stress include dressing properly, drinking plenty of the right fluids, and establishing an appropriate work/break regimen. Typical control measures designed to prevent cold stress also include dressing properly, and establishing an appropriate work/break regimen. The Project Manager must assure that the appropriate measures are observed. Refer to the Basewide Health and Safety Plan for more information.

9.2.2.4 Traffic Safety

All project staff operating a vehicle on site must follow all Base traffic regulations. The use of seat belt is required when vehicles are in motion.

9.2.2.5 Pedestrian Traffic

The uncontrolled presence of pedestrians at SWMU 136 can be hazardous to both pedestrians and site workers. Prior to the initiation of site activities, the site should be surveyed to determine when and where pedestrians may gain access. This includes walkways, gates, and doorways. If work activities are subject to pedestrian traffic, barriers or caution tape should be used to exclude all non-work related pedestrian traffic.

9.2.2.6 Noise

The mechanical equipment for SWMU 136 bioventing system is a potential source of high noise exposure. If high noise exposure (>85 decibels [dBA]) is suspected when mechanical equipment

is in operation, a noise survey will be performed. If noise survey results show exposure greater than 85 dBA, the area will be posted with high noise area caution signs and personnel will be required to wear hearing protection (ear plugs or ear muffs). If the 8-hour time weighted average exposure level of 85 dBA is exceeded, personnel are required to participate in the FWENC program as described in Section 4.4 of the Corporate Health and Safety Program Manual.

9.2.2.7 Thermal Hazards

Whenever possible, all hot surfaces in the SWMU 136 bioventing system will be insulated to protect personnel working in the area. Hot surfaces that cannot be insulated (i.e., control valves) are posted with warning signs.

9.2.2.8 Manual Lifting and Material Handling

Always bend at the knees when lifting heavy objects such as hand tools and equipment. Keep the weight close to your body. Do not twist or turn the body while lifting. Get help or use a mechanical lifting or carrying device when moving awkward-shaped objects or objects too heavy to comfortably lift alone.

9.2.2.9 Poisonous Plants

Cactus spines can inflict painful injuries to unwary site personnel. Avoidance procedures include the following:

- Visually survey each area of site where cacti may grow prior to walking across.
- Be particularly alert to cacti which are low to the ground.
- Avoid stepping on or scraping up against cactus plants.
- Be aware that spines may not always be readily apparent to the casual observer.

Emergency first aid procedures for cactus injuries are provided in Table 9-4 following Section 9.10.

9.2.2.10 Insects

Stinging insects, primarily spiders, scorpions, bees, and wasps, are prevalent in the area of the sites during the warmer months. Spiders are routinely found under all the well heads. Field personnel should be careful to avoid contact by always looking ahead to where they are walking, standing, sitting, or leaning. Emergency first aid procedures for insect bites are given in Table 9-4 following Section 9.10.

Persons who have experienced serious reactions from previous insect bites should be urged to secure any possible immunization or have an antidote readily available to prevent more serious reactions from future insect bites and stings.

The signs and symptoms of insect bites and stings are as follows:

- The stings of bees and the bites of mosquitoes, ticks, fleas, and bedbugs usually cause only local irritation and pain in the region stung or bitten.
- Moderate swelling and redness may occur and some itching, burning, and pain may be present.

The effect of stings and bites of spiders, centipedes, tarantulas, and scorpions in some instances are much more severe than those of the insects previously mentioned. They may cause alarming symptoms.

The signs and symptoms of these bites are as follows:

- Generally, the bite consists of two small pinpoint punctures of the skin and produce local swelling and redness with a smarting, burning pain.
- Exhaustion, sweating, and nausea may appear.
- Pain or cramping may develop in the back, shoulders, chest, and limbs.
- In some instances the symptoms are mild and subside within 6 to 12 hours, but occasionally they are severe and can cause a state of collapse.

The black widow spider is a moderately large, glossy black spider with very fine hairs over the body, which give it a silky appearance. On the abdomen is a characteristic red or crimson

marking in the form of an hourglass. Only the female is poisonous; the male, which is smaller, is harmless.

The brown recluse spider injects a venom which causes a limited destruction of red blood cells and certain other blood changes. The victim may develop chills, fever, joint pains, nausea, and vomiting. A rash may also develop within 24 to 48 hours.

Tarantulas are hairy spiders. Those found in the southwestern United States are not poisonous, but occasionally a victim will have an allergic reaction to the injected venom. Tarantulas coming into the country in imported fruit may be poisonous. Their bites may cause marked pain and local redness with swelling. Death is extremely rare.

Most species of scorpions in this country do not inject a toxin that is generally harmful to humans. The sting may result in local swelling and discoloration, similar to a wasp sting, and may sometimes cause allergic reactions. The sting of the more dangerous species of scorpions causes little or no swelling or discoloration, but locally there will be a tingling or burning sensation. Considerable discomfort may ensue. Death, although unlikely, occurs occasionally in infants and young children and might conceivably occur in older persons. The poison acts mainly on the nervous system.

Immediate medical attention is required for personnel suspecting a black widow, brown recluse, or scorpion bite or sting.

9.2.2.11 Rattlesnakes

Rattlesnakes could be encountered during site activities. Employees are advised to be alert to this danger. Snake bites can be painful and lead to serious illness if not treated immediately. If bitten, employees must seek medical attention immediately. The best thing to do, however, is to avoid contact. Wear sturdy leather boots. Avoid walking in areas where snakes may hide. Use extreme

caution when moving or lifting objects which could be used by snakes as cover. Never reach under or behind such objects or into other areas where snakes may hide.

The signs and symptoms of a snake bite are as follows:

- A sharp, stinging pain with one or more puncture marks in the area.
- Swelling, discoloration, and pain in the bitten area.

As the poison goes through the body, other symptoms develop such as:

- Weakness
- Nausea and vomiting
- Weak and rapid pulse
- Respiratory distress
- Shock

Emergency first aid procedures for snake bites are provided in Table 9-4 following Section 9.10.

9.2.2.12 Confined Space

The scope of work does not require personnel to enter a confined space. Personnel are strictly prohibited from entering such spaces.

9.3 SITE WORK ZONES AND PERSONAL PROTECTIVE EQUIPMENT

9.3.1 Site Work Zones

The exclusion zone and contamination reduction zone for the SWMU 136 bioventing system is the entire system area including all pumps, wells, and piping. All personnel entering these areas must have the appropriate training, medical qualifications, and PPE to conduct work activities. Untrained visitors may enter the area if escorted by a trained worker.

All areas outside the SWMU 136 bioventing system are not access controlled and are considered a part of the support zone. Activities conducted in the support zone will be considered unregulated.

9.3.2 Personal Protective Equipment

PPE will be required based on the activities covered by this plan. Based on the nature of the work activities, standard work clothing (long pants, sleeved shirts, hard hat, safety glasses, and steel-toed boots) will be worn. Some activities as described in this section will require additional PPE. The PHSM will make the determination as to PPE selection and use. Table 9-2 defines the minimum PPE required for site activities.

9.4 DECONTAMINATION

9.4.1 Personnel Decontamination

Personnel decontamination will be accomplished by following a systematic procedure of cleaning and removal of PPE. Disposable gloves or Tyvek will be rinsed free of gross contamination and disposed of as general refuse. Respirators will be cleaned after each use and will be stored in plastic bags after cleaning. General refuse will be placed in plastic bags and then into an on-site dumpster.

Personnel are required to wash their hands and face following all maintenance, operation, monitoring, or repair activities to minimize the potential for ingestion of contaminants.

9.4.2 Equipment Decontamination

All equipment used to perform maintenance, operation, monitoring, or repair activities for the long-term treatment systems shall be decontaminated. Decontamination of equipment will be performed with a surfactant wash and rinse or by proper disposal methods.

9.5 MEDICAL SURVEILLANCE

Personnel covered by this SSHP are active participants in FWENC or similar medical surveillance program which complies with OSHA 29 CFR 1910.120(f), American National Standards Institute (ANSI) Z88.2 and the USACE Safety and Health Requirements Manual EM 385-1-1, Appendix K (USACE 1996). Each individual has completed an annual surveillance

examination and/or an initial baseline examination within the last year prior to performing any work on this site covered by this SSHP.

9.6 AIR MONITORING

Air monitoring will be conducted during activities in which the potential for exposure to vapors exist. The activities and air monitoring requirements are addressed in Table 9-3.

9.6.1 Personal Exposure Monitoring

According to OSHA 29 CFR 1910.120, personal exposure monitoring for the purpose of determining individual time-weighted average exposures is required during certain site cleanup or other remedial activities. Determinations regarding individual exposure potentials will be based on the work area monitoring described above. Personal air sampling is not anticipated at this time. If the PHSM identifies higher than expected total organic vapor or benzene concentrations during work activities, the need to collect personal samples will be re-evaluated.

9.7 RESPIRATORY PROTECTION PROGRAM

If required (based on air monitoring results), Level C respiratory protection will be worn, consisting of full-face air purifying respirator with the appropriate cartridges selected for contaminants. Use and selection of respirators will be in accordance with FWENC's Respiratory Protection Program, HS 5-2.

9.8 TRAINING AND COMMUNICATION

9.8.1 General Training Requirements

Personnel covered by this SSHP must be active participants in the FWENC Hazardous Waste Operations and Health and Safety Training Program, which complies with OSHA 29 CFR 1910.120(e), OSHA 29 CFR 1926.20, and the USACE Safety and Health Requirements Manual EM 385-1-1 (Section 28.D) (USACE 1996) or equivalent.

Table 9-3 Air Monitoring Requirements and Action Levels

Contaminant	Activity	Instrument	Action Levels*	Action
TRPH	Routine Operating Procedures -- Section 3.0, System Startup and Operational Strategy	None required	None required	None
	System Maintenance -- Section 4.0 Measuring gases in monitoring wells and collecting soil samples	PID	>1 ppm	Screen for benzene
			≥10 ppm	Upgrade to Level C
			≥100 ppm	Stop work and contact PHSM
	Routine Maintenance -- Section 4.2, Routine Maintenance Procedures	None required	None required	None
Benzene	System Maintenance – Section 4.0, Measuring gases in monitoring wells and collecting soil samples when total organic vapor breathing zone concentrations are > 1 ppm.	Detector Tubes	≥0.5 ppm	Upgrade to Level C
			≥10 ppm	Stop work and contact PHSM

ppm - parts per million

Individuals who plan to work in the active/designated exclusion zones and/or contamination reduction zones where the potential for exposure to safety or health hazards exists must have completed an annual 8-hour refresher training course and/or initial (40-hour classroom and 3-day on-site supervised) training course prior to performing any such work.

Individuals assigned to perform first aid and Cardiopulmonary Resuscitation (CPR) must hold current American Red Cross or equivalent training certification. All FWENC personnel located on site are trained in First Aid and CPR.

9.8.2 On-Site Communications

Verbal communication at the sites may be impeded by on-site background noise or on-going activities, or the use of PPE. Hand signals may be used between personnel and will be reviewed during daily safety/pre-shift meetings. The use of the "Buddy System" will ensure that any information is communicated between all workers on site. Visual contact must be maintained between pairs when respiratory protection is used.

External communications between on-site personnel will be conducted through the use of cellular telephones. Exact locations of the site facility telephones and emergency telephone numbers will be obtained before site activities begin and will be communicated to all site personnel.

9.8.3 Notification of Activities

Prior to starting work at the site, the Holloman AFB fire department and hospital will be contacted by the SHSO regarding the scope of work, potential hazards at the site, and to confirm that the emergency services are capable of handling an emergency situation.

9.8.4 Safety Orientation and Tailgate Meetings

A tailgate safety meeting will be provided to the workers daily by the SHSO to review the chemical, physical, and toxicological properties of the contaminants that may be present at the site. Proper and safe work practices will be reviewed. Contingency plans for potential

emergency situations and location(s) of available safety equipment (i.e., eyewash, first aid kit, and fire extinguisher located behind the seat of every FWENC vehicle) will be addressed at this meeting. The SHSO shall inspect the site to ensure that the SSHP is being properly implemented. The SSHP will be periodically reviewed to ensure that all physical and chemical hazards encountered during field activities are recognized and addressed by the SSHP.

9.9 GENERAL SAFETY RULES

1. All site personnel must attend each day's Health and Safety Briefing.
2. Any individual taking prescribed drugs shall inform the SHSO of the type of medication. The SHSO will review the matter with the PHSM and the Corporate Medical Consultant (CMC), who will decide if the employee can safely work on site while taking medication.
3. The PPE specified by the SHSO and this document shall be worn by all site personnel. This includes hard hats and safety glasses which must be worn at all times in active work areas.
4. Facial hair (beards, long sideburns, or mustaches) which may interfere with a satisfactory fit of a respiratory mask is not allowed on any person who may be required to wear a respirator.
5. Personnel must follow proper decontamination procedures.
6. Eating, drinking, chewing tobacco or gum, smoking, and any other practice that may increase the possibility of hand-to-mouth contact is prohibited in the exclusion zone or the contamination reduction zone. (Exceptions may be permitted by the PHSM to allow fluid intake during heat stress conditions.)
7. All lighters, matches, cigarettes, and other forms of tobacco are prohibited in the exclusion zone.
8. All signs and demarcations shall be followed. Such signs and demarcation shall not be removed except as authorized by the SHSO.
9. All personnel must follow Hot Work Permits as issued.
10. All personnel must use the Buddy System in the exclusion zone.
11. All personnel must follow the work-rest regimens and other practices required by the heat stress program.
12. All personnel must follow lockout/tagout procedures when working on equipment involving moving parts or hazardous energy sources.

13. No person shall operate equipment unless trained and authorized.

14. Ladders and scaffolds shall be solidly constructed, in good working condition, and inspected prior to use. No one may use defective ladders or scaffolds.

15. Fall protection or fall arrest systems must be in place when working at elevations greater than six feet for temporary working surfaces and four feet for fixed platforms.

16. Safety belts, harnesses, and lanyards must be selected by your Supervisor. The user must inspect the equipment prior to use. No defective personal fall protection equipment shall be used. Personal fall protection that has been shock loaded must be discarded.

17. Hand and portable power tools must be inspected prior to use. Defective tools and equipment shall not be used.

18. GFCIs shall be used for cord and plug equipment used outdoors or in damp locations. Electrical cords shall be kept out walkways and puddles unless protected and rated for service.

19. Improper use, mishandling, or tampering with health and safety equipment and samples is prohibited.

20. Horseplay of any kind is prohibited.

21. Possession or use of alcoholic beverages, controlled substances, or firearms on any site is forbidden.

22. All accidents, no matter how minor must be reported immediately to your Supervisor.

All personnel shall be familiar with the Emergency Response Plan, Section 9.12.

9.10 FIRST AID PLAN

The following general guidelines will apply first aid services:

1. Survey the situation. Do not endanger your own life. Do not enter a confined space to rescue someone who has been overcome unless properly equipped and a standby person is present.

2. Call the fire department immediately. Phone numbers for the Base fire department are 475-1117 or 479-6117. Explain the physical injury, chemical exposure, fire, or release.

3. Decontaminate the victim without delaying life-saving procedures.

4. If the victim's condition appears to be noncritical, but seems to be more severe than minor cuts, he/she should be transported to the nearest hospital by trained Emergency Medical Services (EMS) personnel. The attending physician has the responsibility for determining the severity of the injury.

5. When transporting an injured person to a hospital, bring the Basewide Health and Safety Plan to assist medical personnel with diagnosis and treatment. In all cases of chemical overexposure, follow standard procedures as outlined for poison management, first aid, and, if applicable, CPR.

6. Notify the Project Manager and the SSHO. Complete the FWENC Incident Report and Investigation Form, (found in the Basewide Health and Safety Plan) and the USACE Accident Investigation Report (Appendix B).

7. Material Safety Data Sheets (MSDSs) will be provided to the medical facility at the beginning of the project.

Additional information is provided in Table 9-4.

9.11 VISITOR REQUIREMENTS

Visitors to the site will be required to participate in a site safety orientation briefing. In accordance with the contract requirements, four sets of protective equipment (excluding respirators, prescription glasses, and safety shoes) specified in this section will be continuously maintained on site for government representatives. All visitors are required to sign the Daily Briefing sign-in sheet.

Table 9-4 Emergency First Aid Procedures **Page 1 of 2**

Emergency	Procedure
Stopping Bleeding	1. Give medical statement, that you are trained in first aid/CPR. 2. Assure airway, breathing, circulation 3. Use DIRECT PRESSURE over the wound with clean dressing or your hand (use nonpermeable gloves). Direct pressure will control most bleeding. 4. Bleeding from an artery or several injury sites may require DIRECT PRESSURE on a PRESSURE POINT. Use pressure points for 30-60 seconds to help control severe bleeding. 5. Continue primary care and seek medical aid as needed.
Cardiopulmonary Resuscitation (CPR)	1. Give medical statement, that you are trained in first aid/CPR. 2. Arousal: Check for consciousness. 3. Open airway with chin-lift. 4. Look, listen, and feel for breathing. 5. If breathing is absent, give 2 slow, full rescue breaths. 6. Check the pulse for 5 to 10 seconds.
Contact with Poisonous Plants	1. Contaminated clothing and jewelry should be removed. 2. Wash area with soap and water. 3. A lotion may be applied to ease the victim's discomfort, if the rash is mild. 4. If a severe reaction appears, seek medical help.
Insect Bites	The first aid for insect bites and stings includes: 1. The sting area should be inspected to determine whether the stinger is still left in the body. If it is, remove it in order to prevent further injection of toxin. The stinger should be carefully scraped off the skin, rather than grasped with tweezers, so as not to squeeze toxin into the body. 2. Application of ice or ice water to the bite helps to slow absorption of toxin into the blood stream. A paste of baking soda and water can also be applied to the bite. 3. The victim should be observed for signs of an allergic reaction. For people who are allergic, maintain an open airway and get the victim to medical help as quickly as possible. 4. Bites from black widow or brown recluse spiders and scorpions require immediate medical attention.

Table 9-4 Emergency First Aid Procedures **Page 2 of 2**

Emergency	Procedure
Insect Bites (continued)	The first aid for an allergic reaction to bites and stings of bees, wasps, spiders, centipedes, tarantulas, and scorpions includes: 1. Apply a cold pack on the area. 2. Get the victim to medical help as quickly as possible.
Snake Bites	1. Begin care at once. 2. Keep the victim lying down and quiet with the injured part immobile and lower than the rest of the body. 3. Remove all rings, watches, and bracelets from the extremity. 4. Treat for shock. 5. Apply an ice pack to the wound only if the poison control center or a physician advises to do so. Do not cut into the bite and suction or squeeze unless you are directed to do so by a physician. NEVER suck the venom from the wound using your mouth. 6. Do not give the victim anything by mouth. 7. Identify the snake if possible. If the snake can be killed, take it to the hospital with the victim. 8. Monitor vital signs while transporting victim to a medical facility. 9. For persons who frequent regions infested with poisonous snakes, it is recommended that a snakebite kit be carried.

9.12 EMERGENCY RESPONSE PLAN

9.12.1 General Requirements

OSHA defines emergency response as any "response effort by employees from outside the immediate release area or by other designated responders (i.e., mutual-aid groups, local fire departments, etc.) to an occurrence which results, or is likely to result in an uncontrolled release of a hazardous substance." Personnel covered by this section are not expected to participate in an emergency response where there are potential safety or health hazards (i.e., fire, explosion, or chemical exposure).

9.12.2 Emergency Telephone Numbers

Name	Project Title/Assigned Role	Phone Number
Ambulance (Base)		9-911
Fire Dept. (Base)		(505) 475-1117 or 479-6117
Base Hospital	49th Medical Group Hospital	(505) 475-3111
Poison Control		(800) 432-6866
USEPA (info line)		(800) 424-9346
Nat. Response Center		(800) 424-8802
Chemtrec		(800) 424-9300
Civilian Hospital	Gerald Champion Memorial Hospital	(505) 439-2100
Sina Seyedian	Project Manager	(303) 988-2202
Daniel Holmquist	Site Manager	(505) 479-2668
Dave Rizzuto	Site Health & Safety Supervisor	(505) 479-2668
Andrew Strickland, CIH	PHSM	(303) 988-2202
Ron Versaw	DO Manager	(303) 980-3598
Mark Mercier	Technical Mgr.	(402) 221-7666
Warren Neff	Base POC	(505) 479-5395

9.12.3 Incident Reporting Procedures

In the event of an accident or incident, the FWENC Incident Report and Investigation Form (found in the Basewide Health and Safety Plan) and the USACE Accident Investigation Report (Appendix B) must be completed. Depending upon the nature of the incident, additional agencies or individuals that may need to be notified include the USEPA, NMED, OSHA, Base

Point of Contact (POC). Unless otherwise mandated by law, no outside agency may be contacted without explicit approval by the Air Force.

All incidents resulting in injury, illness or property damage requires an accident investigation and report. The investigation should be initiated as soon as emergency conditions are under control. The purpose of this investigation is not to attribute blame but to determine the pertinent facts so that repeat or similar occurrences can be avoided.

The investigation should begin while details are still fresh in the mind of anyone involved. The person administering first aid may be able to start the fact gathering process if the injured are able to speak. Pertinent facts must be determined. Questions beginning with who, what, when, where, and how are usually most effective to discover ways to improve job performance in terms of efficiency and quality of work, as well as safety and health concerns.

9.12.4 Medical Treatment Facilities

The routes to the Holloman AFB Hospital and to Gerald Champion Memorial Hospital in Alamogordo are shown in Figure 9-1.

9.13 DANGEROUS WEATHER RESPONSE PLAN

Work will not be permitted during severe weather conditions or if there is an imminent threat of severe weather conditions which threaten the health and safety of on-site workers. Additionally site workers are advised to:

1. Stop work during electrical storms and other extreme weather conditions such as extreme heat or cold temperatures.
2. Take cover indoors or in vehicle.
3. Listen to local forecasts for warnings about specific weather hazards such as tornadoes, flash floods, or electrical storms.
4. Take frequent work breaks during extreme heat or cold conditions.

FIGURE 9-1

LOCATION MAP FOR HOSPITALS

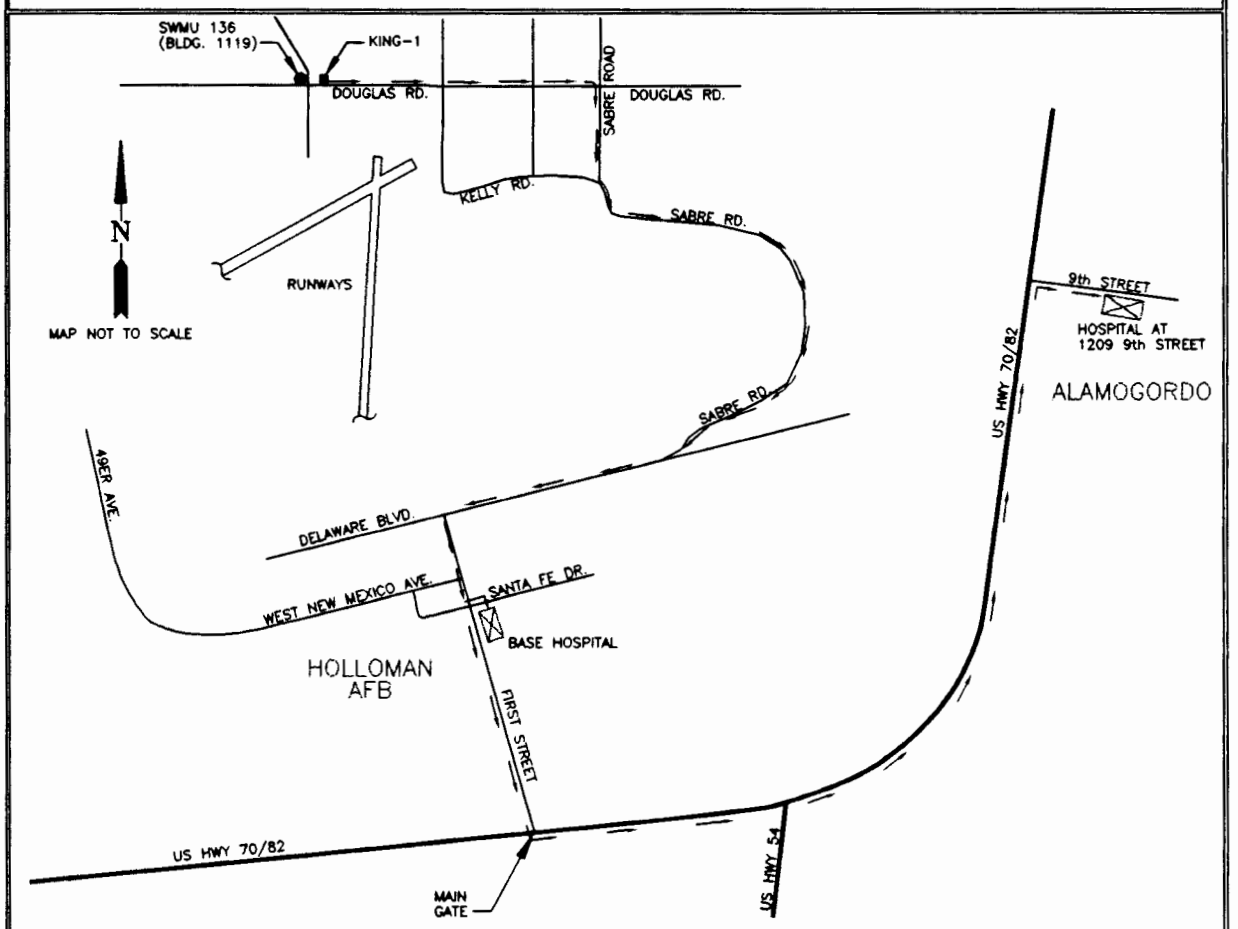

Holloman Air Force Base Hospital:

Name: Holloman AFB Hospital
Address: Intersection of First Street and Santa Fe Drive
City, State: Holloman AFB, NM
Phone: (505) 475-3111

HOSPITAL DIRECTIONS FROM SWMU-136:

Proceed east on Douglas Road. Turn south onto Sabre Road. Proceed on Sabre Road and continue west onto Delaware Blvd. Turn south onto First Street. Hospital is located at southeast quadrant of intersection of First Street and Santa Fe Drive

Alamogordo Hospital:

Name: Gerald Champion Memorial Hospital
Address: 1209 9th Street
City, State: Alamogordo, NM
Phone: (505) 439-2170 (Emergency Room)

HOSPITAL DIRECTIONS FROM BASE MAIN GATE:

Turn right onto US Highway 70/82. Proceed to Alamogordo. Turn right onto 9th Street. Proceed to the Hospital at 1209 9th Street.

9.14 APPROVALS

The following individuals have reviewed this plan and have determined that it adequately addresses the site hazards and control measures and meets the requirements of the FWENC Health and Safety Program HS 3-2.

NAME AND TITLE	SIGNATURE AND DATE
Sina Seyedian, Project Manager	
Ron Versaw, Delivery Order Manager	
Daniel Holmquist, Site Manager	
Andrew Strickland, Project H&S Manager	

10.0 REFERENCES

Battelle Memorial Institute (A. Leeson and R. Hinchee)
1995 Principles and Practices of Bioventing, Volumes I and II, September.

DOT (Department of Transportation)
1992 Hazardous Materials Regulations Amendments, Docket HM-126F.

1982 Hazardous Materials Regulations Amendments, Docket HM-181, April.

EBASCO (Ebasco Services Inc.)
1995 Final Basewide Health and Safety Plan for Holloman AFB, December.

FWENC (Foster Wheeler Environmental Corporation)
1996 Draft Final Construction Workplan for SWMU 136, Building 1119 Washrack Drainage Pit Soil Bioventing System, Holloman AFB, December.

1995 Health and Safety Manual, February.

FWENC and Radian Corporation
1994 Phase I Resource Conservation and Recovery Act Facility Investigation Report, Table 2 Solid Waste Management Units, July.

USEPA (United States Environmental Protection Agency)
1986 SW 846 - Test Methods for Evaluating Solid Waste, Third Edition.

1983 Methods for Chemical Analysis of Water and Wastes, USEPA-600/4-79-020.

USACE (United States Army Corps of Engineers)
1996 Safety and Health Requirements Manual, EM 385-1-1, September.

APPENDIX A

STANDARD OPERATING PROCEDURES

LIST OF STANDARD OPERATING PROCEDURES

SOP A1	SAMPLE HANDLING AND DOCUMENTATION
SOP A2	EQUIPMENT DECONTAMINATION
SOP A3	SUBSURFACE SOIL SAMPLING
SOP A4	DRUM SAMPLING
SOP A5	CALIBRATION PROCEDURES FOR FIELD EQUIPMENT
SOP A6	RESPIROMETRY TESTING
SOP A7	BOREHOLE AND SAMPLE LOGGING

SOP A1 SAMPLE HANDLING AND DOCUMENTATION

A1.1 PURPOSE

Sample handling and documentation procedures will be used to ensure the integrity of the sample from sample collection to receipt at the laboratory. Documentation of sample handling will be completed to ensure the traceability and integrity of the sample.

A1.2 PROCEDURE

Labeling

All sample containers will be labeled. Labels may be partially completed prior to sample collection. The date, time, and sampler's name should **NOT** be completed until the time of sample collection. Preprinted, self-adhesive sample labels containing all appropriate sample information including sample identification, field sample number, sample type, and analyses requested will be used. Sample labels will be completed with waterproof ink and should be completed and attached prior to sample collection for soil samples collected in jars and all decontamination samples collected in bottles.

At a minimum, each numbered label will contain the following information:

- Project/facility
- Sample type (e.g., grab, composite)
- Sampler's company affiliation
- Date and time of sample collection
- Analyses required
- Preservation used
- Sampler's initials
- Missouri River (MR) identified if sample is collected for the United States Army Corps of Engineers (USACE) laboratory
- Sample identification (see below)
- MR Laboratory Information Management System (LIMS) number

Sampling Containers

Certified, commercially clean sample containers will be obtained from the contract analytical laboratory. If appropriate, the bottles will be labeled by the laboratory to indicate the type of sample to be collected. Surface soil samples will typically be in collected wide-mouth sample jars or in stainless steel liners.

Sample Preservation

All samples will be stored on ice in an insulated cooler immediately following sample collection. Soil samples do not require additional preservation. Sample containers for aqueous samples will be supplied by the laboratory and will contain the appropriate preservatives.

Sample Handling And Shipping

Sample containers will be placed in recloseable plastic storage bags and wrapped in protective packing material (if appropriate). Ice (double bagged using plastic trash bags) will be placed on top of the samples in a cooler for shipment to the laboratory. The drain on the cooler will be taped shut. Samples collected in glass containers will be packed in foam liners and bubble packing or styrofoam peanuts to ensure that no breakage occurs during shipment. Samples will be shipped by overnight express carrier for delivery to the analytical laboratory and to the MR laboratory. The MR laboratory will be notified prior to the arrival of the first shipment, after the final shipment, and prior to any Saturday delivery.

A completed chain-of-custody (COC) form for each cooler will be placed in a ziplock bag and taped to the inside of the cooler lid. Coolers will be wrapped with strapping tape at two locations to secure lids. Signed custody seals will be placed on the outside of each cooler. In addition, "Fragile" labels and "This Side Up" labels will be placed on the outside of each cooler containing glass bottles. "This Side Up" labels will be placed on all four sides and "Fragile" labels on at least two sides. Note that each cooler cannot exceed the weight limit set by the shipper.

Holding Times and Analyses

The holding time is specified as the maximum allowable time between sample collection and analysis and/or extraction and is, based on the analyte of interest, stability factors, and preservation methods. The allowable holding time for ammonia nitrogen, nitrate/nitrite, and TKN is 28 days. The allowable holding times for TRPH and BTEX are 28 and 14 days, respectively. Samples should be sent by overnight courier service to the laboratory daily after collection.

Sample Documentation and Tracking

This section describes documentation required in the field notes, Daily Quality Control Reports (DQCRs), and sample COC requirements.

Field Notes

Documentation of observations and data acquired in the field will provide information on the acquisition of samples and will also provide a permanent record of field activities. The observations and data will be recorded with waterproof ink in a permanently bound weatherproof field book with consecutively numbered pages and, if applicable, on field sampling data sheets.

The information in the field book will include the following at a minimum. Additional information is included in the specific Standard Operating Procedures (SOPs) regarding the appropriate data sheets:

- Project name
- Location of sample
- Sampler's signature
- Date and time of sample collection
- Sample identification numbers
- Description of samples (matrix sampled), composite or grab sample
- Analysis to be performed
- Number and volume of samples
- Description of Quality Assurance/Quality Control (QA/QC) samples
- Sample methods or reference to the appropriate SOP

- Sample handling as appropriate for samples
- Field observations
- Personnel present

Changes or deletions in the field book should be crossed out with a single strike mark, initialed, and dated by person making change and must be legible. Sufficient information should be recorded to allow the sampling event to be reconstructed without relying on the collector's memory.

Each page of the field book will be signed by the person making the entry. Anyone making entries in another person's field book will sign and date those entries.

Daily Quality Control Report

To supplement the information recorded in the field book, DQCRs will also be maintained to document daily field activities and will note any nonconformances and corrective actions taken at every sampling location. DQCRs will be maintained by each field sampling team and cross-checked for completeness at the end of each day by a sampling team member and/or the field operations leader. They will be signed and dated by the individual making entries and initialed by the reviewer upon completion. Copies of the DQCR will be forwarded to the USACE resident engineer by noon of the following day. Copies of the DQCR will be forwarded to the Foster Wheeler Environmental Corporation (FWENC) QA officer for review on a weekly basis.

Sample Chain-of-Custody

During field sampling activities, the path of the sample must be able to be traced from the time the samples are collected until laboratory data are issued. Information on the custody, transfer, handling, and shipping of samples will be recorded on a COC form. COCs will include site identification, field sample number, sample type, and analysis requested.

The sample handler will be responsible for completing the COC form. The COC will be signed by the sampler when the sampler relinquishes the samples to anyone else. It is not necessary for Federal Express to sign the COC; however, the airbill will be retained by the sample handler for

tracking purposes. A COC form will be completed for each set of samples collected daily and will contain the following information:

- Sampler's signature and affiliation
- Project number
- Date and time of collection
- Sample identification number
- Sample type/matrix
- Grab or composite sample
- Preservative used
- Analyses requested
- Number of containers
- Signature of persons relinquishing custody, dates, and times
- Signature of persons accepting custody, dates, and times (laboratory)
- Method of shipment (i.e., Federal Express)

The person responsible for delivery of the samples to the air carrier will sign the COC form, retain the last copy of the three-part COC form, document the method of shipment, and send the original and the second copy of the COC form with the sample (taped in a ziplock bag to inner cooler lid). Upon receipt at the laboratory, the person receiving the samples will sign the COC form and return the second copy to the project manager. Copies of the COC forms and all custody documentation will be received and kept in the central files. The original COC forms will remain with the samples until final disposition of the samples by the laboratory. The analytical laboratory will dispose of the samples in an appropriate manner 60 to 90 days after data reporting. After sample disposal, a copy of the original COC will be sent to the project manager by the analytical laboratory to be incorporated into the central files.

SOP A2 EQUIPMENT DECONTAMINATION

A2.1 PURPOSE

The purpose of this SOP is to provide guidance for the decontamination of equipment and sampling materials.

A2.2 PROCEDURE

Decontamination of Large Equipment

The following procedure will be used to decontaminate large pieces of equipment such as casings, auger flights, pipe and rods, and those portions of the drill rig that may stand directly over a boring or well location or that come into contact with casings, auger flights, pipes, or rods:

1. Wash the external surfaces of equipment with high-pressure hot water and Alconox or equivalent nonphosphate, laboratory-grade detergent. If necessary, scrub until all visible dirt, grime, grease, oil, loose paint, rust flakes, etc., have been removed. The inside surfaces of the casing, drill rod, and auger flights will also be washed as described above. Specific decontamination instructions will be included in the project-specific addenda.
2. Rinse with potable water.
3. This decontamination procedure will be performed before equipment is used and between each well or other sampling locations.

Decontamination of Sampling Equipment

The following procedure will be used to decontaminate devices such as split-spoons, bailers, and augers that come into direct contact with the samples:

1. Wash and scrub with Alconox or equivalent nonphosphate, laboratory-grade detergent.
2. Rinse with potable water.
3. Rinse with deionized, analyte-free water.
4. Rinse with methanol (may be omitted if samples will not undergo organic chemical analyses).
5. Rinse with deionized, analyte-free water.
6. Air dry.

Solvents used (methanol and hexane) will be pesticide grade or better. Decontamination of sampling equipment will be kept to a minimum in the field, and, whenever possible, dedicated sampling equipment will be used. Decontamination fluids will be disposed as specified in

Section 5.0, Waste Management. Personnel directly involved in equipment decontamination will wear appropriate personal protective equipment as specified in the Site Safety and Health Plan (SSHP).

SOP A3 SUBSURFACE SOIL SAMPLING

A3.1 PURPOSE

The purpose of this SOP is to provide guidance for the collection of soil samples, which will be analyzed for nutrients and contaminants.

A3.2 PROCEDURE

The following elements regarding soil borings should be considered when developing project-specific plans:

- All drilling will conform to state and local regulations. Permits, applications, and other documents required by state and local authorities will be obtained.
- The locations of all borings will be approved in writing by the Base before drilling commences.
- The drill rig and all equipment that enters a borehole will be decontaminated in accordance with SOP A2.
- The drill rig will not leak any fluids that may enter the hole or contaminate equipment that is placed in the hole. The use of rags or diapers to absorb leaking fluids is unacceptable. All leaking fluids will be caught in a proper container until the leak is repaired. If sample integrity could be compromised by leaking drill rig fluids, then sample operation may be shut down until the leak is repaired.
- No fluids will be used to advance soil borings.
- Surface water and extraneous materials will not enter the boring.
- Boreholes will be abandoned by grouting.
- All trash will be disposed as solid waste in a designated dumpster.
- Drill cuttings will be stored on and covered with plastic until laboratory analytical data is received for characterization and disposal.
- If analytical results are less than 1,000 milligrams per kilogram (mg/kg) total recoverable petroleum hydrocarbons (TRPH), drill cuttings will be disposed on site by evenly spreading.

Before digging begins, a digging permit, "Base Civil Engineering Work Clearance Request" form, needs to be completed and approved by the chief of operations or chief of engineering and environmental planning at the Base. The work clearance request is processed immediately prior to the start of work. If delays are encountered and the conditions at the job site change (or may

have to be changed), this work clearance request must be reprocessed. The type of information that must accompany this permit includes the following:

- Location
- Work order/job number
- Contract number
- If the area has been staked/clearly marked or not
- Sketch of the excavation
- Type of facility work involved, i.e., pavements, drainage systems, railroad tracks, overhead or underground utility or communications, aircraft or vehicular traffic flow, security, etc.
- Date clearance requested and terminated
- Requesting official, phone number, and organization

Direct Push Sampling for Soil and Groundwater

Direct push technology (DPT) will be used to rapidly collect soil and water samples whenever possible. This technique provides for collection of undisturbed samples and does not generate soil cuttings. This section discusses DPT methodology only.

The contractor will need a copy of the DPT subcontractor work plan, waste containers, and appropriate health and safety gear. All additional equipment and materials will be provided by the DPT subcontractor. The DPT subcontractor should be equipped with a rig capable of pushing 30 feet and collecting soil and groundwater samples from any interval within that depth. Equipment should include at minimum the following items:

- Hydraulic ram with hammer assembly
- 1- to 1.5-inch diameter drill rods
- Stainless steel piston-type, split-spoon, or equivalent soil sampling device that allows for lithologic characterization and retrieval of at least 400 milliliters of sample volume
- Geoprobe®, Hydrocone®, bailer, Teflon® tubing and peristaltic pump or equivalent water sampling device
- Small diameter polyvinyl chloride (PVC) riser and screen to make temporary wells if recovery is too slow
- Decontamination equipment

- Health and safety equipment

If a situation arises in which the groundwater recharge is too slow to allow for efficient sampling, a temporary PVC well can be installed for sampling at a later time. This well, however, must be installed according to the following specifications:

- The well will be narrower in diameter than the DPT borehole, leaving annular space around the casing.
- The well will be installed between 2 and 5 feet into the water table.
- New PVC casing and screen will be used, decontaminated with a stream cleaner, and rinsed with copious quantities of deionized water.
- Installation of well will occur using decontaminated gloves.
- The well will be sampled and removed within 48 hours of installation.
- If left unattended or overnight, the well should be fitted with locking well caps or a seal should be used that indicates tampering.
- One volume of the sampling device will be purged prior to sampling.

General Methodology

- Verify that the subcontractor has the necessary drilling and sampling equipment as well as proper decontamination supplies.
- Confirm that sampling locations are staked and that the clearances from all on-Base and off-Base utilities have been obtained. Do not begin the sampling until proper digging permits have been obtained and all of the utility lines have been marked.
- Locate the sample location and position the DPT rig. If the sample point is on thick asphalt or concrete, the DPT subcontractor will use a hammer-drill or equivalent to drill a hole through the pavement.
- Verify that the sampling tip has been properly decontaminated, as specified in SOP A2.2, before beginning penetration.

Soil Sampling Methodology

- For soil sampling, hydraulically advance the sampler to above the target sample interval, unlock the piston point, and advance the sampling device through the sampling interval.
  - — Pull the rods using the hydraulic apparatus and remove the sample insert or split spoon.
  - — Log the soil and collect the required samples as specified in the project-specific addendum and SOP A7.

- Continue sampling at additional depth intervals or abandon the borehole, as appropriate for the location.
- Abandon DPT borehole by grouting or hydrating pellets in maximum lifts of 2 ft to avoid bridging and system short circuiting.

Comments

- If a buried object impedes the DPT sampler or if an insufficient sample volume is recovered, reposition the rig in a location to satisfy the intent of the original sample point and try again. Note this on the borehole logging form.
- If the total recovered sample volume is insufficient for both screening and laboratory analysis, a second hole will be pushed as close as possible to the original hole and an additional sample will be taken from the same depth interval. The two samples will be composited prior to sampling for chemical analysis. Samples to be analyzed for BTEX will not be composited.
- Samples will be collected directly above the smear zone from each of the three plumes. The exact location of DPT drilling will be determined in the field by the site geologist. Future samples will be collected within a 10 foot radius of previously collected samples.

SOP A4 DRUM SAMPLING

A4.1 PURPOSE

The purpose of this SOP is to provide guidance for the sampling of drums containing decontamination water. The laboratory analysis results for these samples will be used in determining the method of disposal.

A4.2 PROCEDURE

Field sampling procedures for the collection of drum contents using a glass pipette are as follows:

NOTE: If drum is bulging, leaking, or indicates a potential to rupture, the drum will not be approached. Only remote opening and sampling will be performed in this case.

- After opening the drum, a liquid phase sample will be collected using a glass pipette, 3 to 4 feet in length. The sample will be transferred to a sample bottle via the pipette. Care is to be taken not to spill any of the sample onto the ground surface.
- Upon completion of sampling, the pipette is to be properly disposed.
- After sampling is complete, the opening on the drum cover will be closed by replacing the bung cap. If no bung cap was present, the hole will be closed using a fiberglass epoxy mix. Red flagging tape will then be tied around the drum indicating that the drum was sampled. The drum will be marked with an indelible marker such as a paint marker to indicate additional details such as sample/drum number, date, etc.
- At the completion of the drum sampling program, all of the drums will be moved to a designated storage area.
- Place analytical samples with preservative (if applicable) in cooler and chill to 4 degrees Celsius (°C). Samples will be shipped within 24 hours to a laboratory.
- Fill out field notebook, sample log sheet, custody seals, labels, and COC forms.

Drums found in a deteriorated condition such that a potential for release is evident will be packed in a salvage drum or in an overpack drum, the latter being preferred. Drums with openings sealed with a fiberglass epoxy mixture will be overpacked.

SOP A5 CALIBRATION PROCEDURES FOR FIELD EQUIPMENT

GA-90 GAS ANALYZER CALIBRATION PROCEDURE

Chapter 3-Field Calibration

Overview

Field Calibration is menu-guided and can be completed in about ten minutes. The pump does not have to be running to pass calibration gas through instrument. Using the pump will consume more gas than necessary. The GA-90 contains a calibration map which is accessed by its microprocessor for baseline reference data. This reference data was programmed into the GA-90 during the factory calibration using various gas mixtures in an environmental chamber. At any time, the GA-90 can be reset by returning to the "factory settings." This clears the GA-90 of any user calibration settings and restores the GA-90 to its original factory calibration.

Factory calibration has been designed to give the best possible results over a wide range of conditions. However, the instrument's accuracy can be improved in specific operating ranges by performing a "field calibration." Most field instruments are calibrated or adjusted prior to taking a series of gas or pressure readings. They may also be checked for calibration during the reading and after readings are taken in order to verify the accuracy of the data collected.

It is important to field calibrate the GA-90 on-site after the instrument has stabilized at working temperature. For this reason, a GA-90 that was calibrated in the cool of the morning may not read as accurately at the hottest part of the day.

Note: Field calibration of the GA-90 will improve the data collected in the range of the calibration gases used. Less accurate readings of concentrations outside the calibrated range may occur. For example, a GA-90 field-calibrated using 50% CH4 and 35% CO2 will give improved readings for the higher methane concentrations, but may provide less accurate readings at very low methane concentrations (which are not common in LFG). Recommended gas mixtures for reading landfill wells and probes are 15% methane, 15% carbon dioxide with balance nitrogen; and 4.5% oxygen with balance nitrogen.

Calibration Gas/Span Gases

Field calibration requires two calibration gas mixtures. One gas mixture is used to span oxygen and zero methane. The other is used to span methane, carbon dioxide and zero oxygen. The oxygen has two curves, 0-5% and 0-25%. The zero point is the same for both curves however the span is different. The user need only to span the instrument using calibration gas below 5% for the 0-5% range or calibration gas below 25% for the 5-25% range. Regardless of the ranges used the instrument **must** be zeroed. Various calibration gas mixtures are available from LANDTEC.

Zero Methane

Calibration of the GA-90 starts by establishing the bottom point of the methane gas curve. The methane (CH4) is zeroed prior to taking readings at the start of each day. This is done by providing the GA-90 a sample that is known to have zero methane — often air is used. This establishes a zero point. This significantly improves the GA-90's CH4 accuracy over the entire range. **It is essential that the gas analyzer is clear of any CH4 at the time of zeroing.** Care must be taken if the GA-90 is to be zeroed on a landfill site. There are situations where methane, which is odorless and colorless, could be in the atmosphere.

After the Zero methane function is performed, the GA-90 recalculates 16 methane calibration points on its methane gas curve and stores the revised data in its memory. The GA-90 does not need to have the CH4 zeroed every time it is switched on because the most recent calibration data is stored in protected memory.

Span Methane

A field calibration spans the methane range prior to taking readings at the start of each day. The best results are obtained after the instrument has stabilized at its working temperature. The procedure alters the methane calibration at all concentrations and stores the revised data in protected memory.

Note: The Zero Methane should be set before setting the Methane Span.

© 1994 Landfill Control Technologies, Corporate Headquarters 6055 E. Washington Blvd., Commerce, CA 94110 U.S.A. GA-90 is a product trademark.

Span Carbon Dioxide (OPTIONAL FEATURE)

Field calibration spans the CO2. It should be spanned prior to taking readings at the start of each day after the instrument has stabilized at its working temperature. The procedure alters the calibration at all concentrations and stores the revised data in protected memory.

Zero Oxygen (OPTIONAL FEATURE)

This function is essential where low concentrations of oxygen are expected (below 5%). Normally there is very little oxygen in LFG. This establishes the zero point of an oxygen curve that is stored in the GA-90's permanent memory.

Span Oxygen (OPTIONAL FEATURE)

The oxygen calibration map contains two span curves, one for oxygen below 5% and one for oxygen above 5%. The proper curve is automatically selected. If a calibration gas with less than 5% oxygen is used, the lower span curve is set. If the calibration gas has more than 5% oxygen, the higher calibration curve is set. Due to the resolution of the GA-90 processor at higher concentrations, the GA-90 may not display the exact concentration entered. This effect can be reduced by altering the entered value so that the displayed value is as close to the actual value as possible.

Note: The Oxygen Zero must be set before setting the Oxygen Span.

Equipment

To perform a field calibration, the following items are required.

1. Cylinder of methane and carbon dioxide span gas
2. Cylinder of 4/96 (4% O2 and 96% N2) calibration gas
3. Pressure regulators for the above cylinders capable of regulating in the range of 0 - 5 psig fitted with connectors suitable for 1/4" Tygon tubing.
4. LANDTEC's regulator, which is set to deliver the required flow, or a regulator and flowmeter capable of delivering 300-500 cc per minute at 2-5 psig. (See Figure 3.1.a)
5. Interconnecting lengths of 1/4" Tygon tubing.

All this equipment is available from LANDTEC. Other types of tubing can be used but the connections **must** be gas tight and secure. The calibration equipment set up is shown in Figures 3.1.a and 3.1.b.

© 1994 Landfill Control Technologies, Corporate Headquarters 6055 E. Washington Blvd., Commerce, CA 94110 U.S.A. GA-90 is a product trademark.

Figure 3.1.a

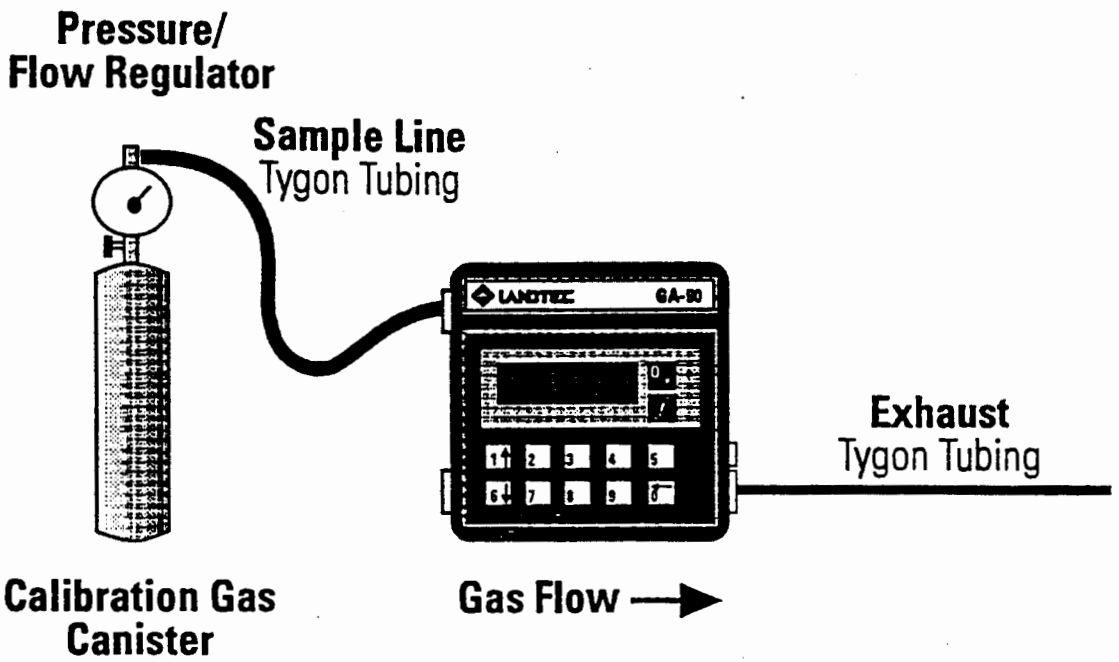

Figure 3.1.b

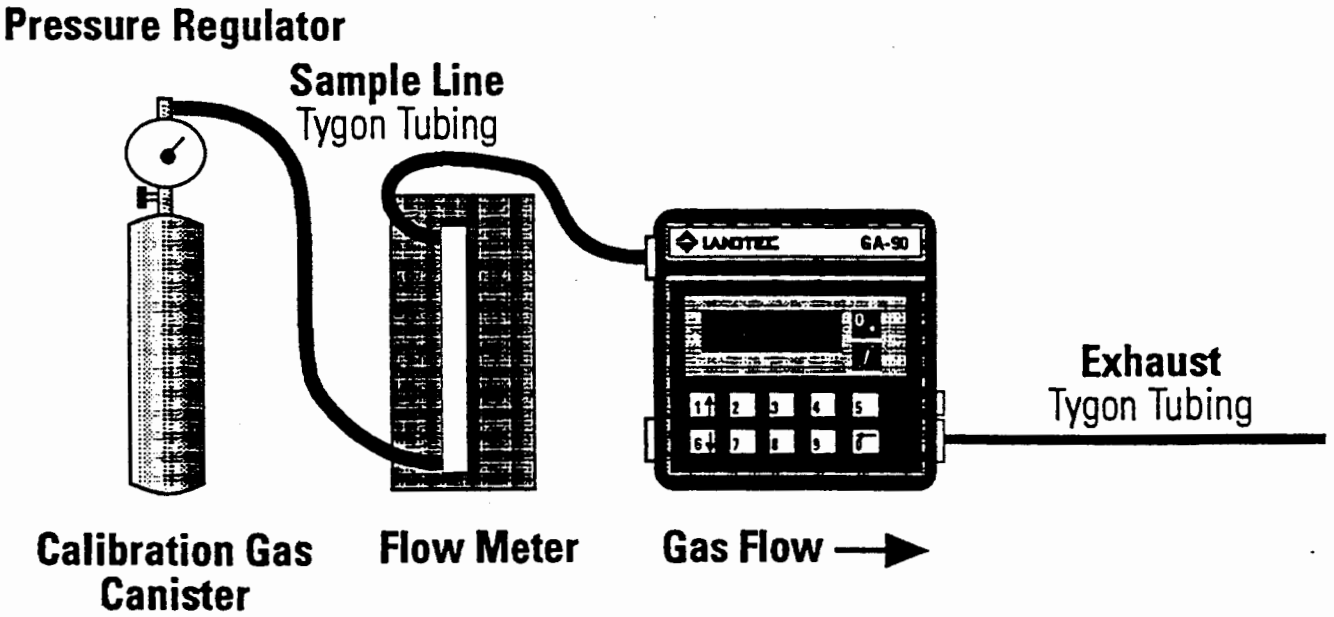

© 1994 Landfill Control Technologies, Corporate Headquarters 6055 E. Washington Blvd., Commerce, CA 94110 U.S.A. GA-90 is a product trademark.

Setting Up the Equipment

As described and shown in the Equipment Section, begin assembly of the GA-90:

1. Connect calibration gas cylinder to the pressure regulator.
2. Connect sample input line.
3. Connect second 24" of 1/4" Tygon tubing to the exhaust nozzle of the GA-90. Direct exhaust away from you and out of the immediate area.
4. Turn the calibration gas cylinder valve two turns.
5. If using a LANDTEC regulator, no flow meter is required. Turn off cylinder valve.
6. If **not** using the LANDTEC regulator, adjust the regulator discharge pressure to 2 psig and the flow meter to 300 cc per minute. Pinch the gas supply hose that will attach to the GA-90. The regulator discharge pressure should not climb to over 5 psig. Turn off the cylinder valve.

Note: This procedure will be duplicated for the second span gas when Oxygen is calibrated. The Oxygen/Carbon Dioxide calibration gas cylinder will be substituted for the Methane/Carbon Dioxide calibration gas.

Recommended Calibration Gases

Zero Gases:	Air to zero methane (in non-methane environment) 4.5% oxygen balance nitrogen to zero methane in methane environment
Span Gases:	15% methane, 15% carbon dioxide, balance nitrogen (span gas) 4.5% oxygen, balance nitrogen (span gas)

Recommended Calibration Method

1. Zero methane
2. Connect methane/carbon dioxide mixture
3. Span methane and carbon dioxide
4. Zero oxygen using methane/carbon dioxide mixture
5. Disconnect methane/carbon dioxide mixture
6. Connect 4.5% oxygen mixture
7. Span oxygen
8. Disconnect oxygen mixture

© 1994 Landfill Control Technologies, Corporate Headquarters 6055 E. Washington Blvd., Commerce, CA 94110 U.S.A. GA-90 is a product trademark.

General Utilities 5 - Gas Calibration

The GA-90 is factory calibrated. To improve accuracy, all standard landfill gas instruments are field calibrated, zeroed or in other ways adjusted prior to every use . This function is done from the General Utilities Menu of the GA-90 which is explained in Chapter 2. Because of the importance of Gas Calibration, this function has been made a separate section. To get to the General Utilities Screen on the GA-90, see Chapter 2, Using the Menu Screens.

1. Press **KEY 1-General Utilities** at the Main Menu Screen (See Figure 3.2.).

Figure 3.2

```
1-General Utilities
2-Read Gas Levels
3-View/Print Data
4-Download Data
```

2. The General Utilities Screen appears as shown in Figure 3.3.

Figure 3.3

```
1-Check Time/Date
2-USA/Metric Units
3-Gas Alarms
9-More          0-Exit
```

3. The gas calibration function is not on the first General Utilities Screen. To reach this screen, press **KEY 9-More** and **KEY 5-Gas Calibration** (Figure 3.4). You could also select **KEY 5** while at the first General Utilities Screen and proceed directly to the gas calibration screen.

Figure 3.4

```
4-Memory
5-Calibration
6-ID Maintenance
9-Back          0-Exit
```

© 1994 Landfill Control Technologies, Corporate Headquarters 6055 E. Washington Blvd., Commerce, CA 94110 U.S.A. GA-90 is a product trademark.

4. After selecting **KEY 5-Gas Calibration** on the General Utilities Sub-Menu Screen, the first Gas Calibration Screen appears as shown in Figure 3.5.

Figure 3.5

```
1-CH4 Calibration
2-CO2 Calibration
3-O2 Calibration
4-Factory Settings
```

5. There are four possible choices. The first allows a field calibration to be performed on the GA-90 for methane. The second choice calibrates carbon dioxide. The third choice calibrates oxygen. The fourth choice returns the GA-90 from a field calibration established by the user to the original factory settings.

6. Each of these calibration options will now be reviewed in order.

Methane (CH4) Calibration

Zero Methane

1. Pressing **KEY 1-CH4 Calibration** on the Calibration Screen brings up the Methane Calibration Screen (Figure 3.6).

Figure 3.6

```
1-Zero CH4
2-Calibrate CH4 Span
0-Previous Menu
```

2. Pressing **KEY 1-Zero CH4** brings up the Zero Methane Screen (Figure 3.7). A methane percentage will not display until the IR Bench warms up. A plus or negative sign may appear on the far left of the display. This symbol can be ignored.

Figure 3.7

```
                  1-Zero
                    Level
+00.2% CH4 Gas    5-Pump
                  0-Exit
```

Note: Do not perform this procedure in the presence of methane.

© 1994 Landfill Control Technologies, Corporate Headquarters 6055 E. Washington Blvd., Commerce, CA 94110 U.S.A. GA-90 is a product trademark.

3. If using oxygen calibration gas to zero methane, see steps 3-6 in the Span Methane section then return to step of this section.

4. If using air to zero methane, press **KEY 5-Pump** to turn on the GA-90 sample pump. There should be no calibration gas hoses attached to the GA-90 during this procedure. The GA-90 will be drawing in a sample of normal air—**which must be free of methane.** Allow the pump to run for two minutes or until gas reading stabilizes.

5. Press **KEY 1 - Zero level** and one of the following screens (Figure 3.8 or Figure 3.9) will be displayed for three seconds before returning to the Zero Methane Screen shown in Figure 3.7.

Figure 3.8

CH_4 Not Zeroed

Figure 3.9

CH_4 Zeroed

6. If the CH4 Not Zeroed Screen (Figure 3.8) was displayed, return to the Gas Calibration Screen by pressing **KEY 0-Exit.** Recheck that no methane was present and re-zero the methane. If problem continues, proceed to instructions contained in this section for Factory Settings.

7. If the CH4 Zeroed OK Screen (Figure 3.9) appeared, press **KEY 0-Exit** to return to the Methane Calibration Screen (Figure 3.10). Press **KEY 2-Calibrate CH4 Span** and proceed to the next section.

Figure 3.10

1-Zero CH_4
2-Calibrate CH_4 Span
0-Previous Menu

© 1994 Landfill Control Technologies, Corporate Headquarters 6055 E. Washington Blvd., Commerce, CA 94110 U.S.A. GA-90 is a product trademark.

Span Methane

1. Read following warning below before proceeding with the next steps.

> **WARNING: The GA-90 is not certified as intrinsically safe. The following procedure MUST NOT be done in a confined area (such as well vaults, underground and indoors) or where there is any chance of sparking or ignition. No smoking, exposed lighting, or other sources of ignition should be in the area. On the GA-90, ensure that exhaust gas is safe, not blocked and properly vented away from you. Ensure that no leaks are present. Unless all above conditions are maintained, an explosion could occur resulting in serious injury or death.**

2. After selecting **KEY 2-Calibrate CH4 Span** on the Methane Calibration Screen, the following CH4 Span Screen appears (Figure 3.11).

Figure 3.11

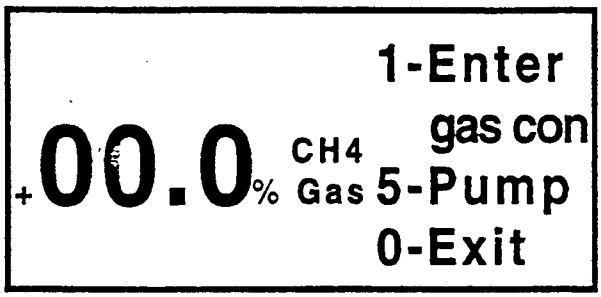

3. Connect the 1/4" Tygon tubing from the calibration gas regulator/flow meter to the GA-90 gas sample port (Figure 1.1). Attach, if not already attached, the Tygon tubing to the exhaust port of the GA-90. Direct the exhaust away from you and out of the immediate area.

4. Turn on the calibration gas mixture of methane and carbon dioxide. **Pump does not have to be on and will consume more gas than necessary if used.**

5. If not using LANDTEC supplied regulator, check the calibration gas flow at 300cc and pressure no greater than 2 psig.

6. Allow the calibration gas to flow into the GA-90 for one minute or until instrument gas reading stabilizes.

7. After one minute, read the methane Gas Concentration on the screen. It should be stable and not changing more than a few tenths of one percent at the 15% gas level, 2% at the higher gas level.

8. Press **KEY 1-Enter Gas Con** and input the methane concentration of the calibration gas from the keyboard of the GA-90 (Figure 3.12). Enter the percentage as three digits XX.X%. 15% methane would be input as 150. The GA-90 will automatically place a decimal point in the proper position. After the percentage is entered, press KEY 0-Exit.

© 1994 Landfill Control Technologies, Corporate Headquarters 6055 E. Washington Blvd., Commerce, CA 94110 U.S.A. GA-90 is a product trademark.

Figure 3.12

```
Enter Concentration
of Calibration Gas
CH4 ?-.-%
                0-Exit
```

9. The next screen is the Caution Re-Calibrate Screen (Figure 3.13).

Figure 3.13

```
Caution  Re-calibrate
Are you sure?

1-Yes            2-No
```

10. Press **KEY 1-Yes** and one of two messages will appear (Figure 3.14 or Figure 3.15).

Figure 3.14

```
Calibration gas NOT
accepted.  Retry?

1-Yes            2-No
```

© 1994 Landfill Control Technologies, Corporate Headquarters 6055 E. Washington Blvd., Commerce, CA 94110 U.S.A. GA-90 is a product trademark.

Figure 3.15

Re-calibrated OK

11. If the Calibration OK Screen flashed (Figure 3.15), proceed to step 13.

12. If the Calibration Gas Not Accepted Screen appears (Figure 3.14) press **Key 1-Yes** and re-enter methane percentage. If Calibration Gas Not Accepted Screen still appears, press **KEY 0-No** and start procedure again from zero methane. If problem persists, proceed to Factory Settings later in this chapter.

13. If no further calibration is required go to step 15.

14. If CO2 is to be calibrated, press **KEY 0** twice. The Gas Calibration Screen (Figure 3.16) should appear. Follow CO2 calibration instructions on next page.

15. Turn off calibration gas cylinder. Remove gas hose attached to gas sample port. Leave exhaust port hose connnected. Turn on pump and purge instrument with air for 60 seconds (CH4 concentration should read 00.0%). You have successfully completed a CH4 field calibration. Press Key 0 to return to Main Menu Screen. If instrument has CO2 option, press **KEY 0** twice to return to Gas Calibration screen.

Carbon Dioxide (CO2) Calibration (OPTIONAL FEATURE)

1. Because the carbon dioxide used in this calibration contains methane, the following warning must be adhered to before proceeding with the steps below.

   WARNING: The GA-90 is not certified as intrinsically safe. The following procedure MUST NOT be done in a confined area (such as well vaults, underground and indoors) or where there is any chance of sparking or ignition. No smoking, exposed lighting, or other sources of ignition should be in the area . On the GA-90, ensure that exhaust gas is safe, not blocked and properly vented away from you. Ensure that no leaks are present. Unless all above conditions are maintained, an explosion could occur resulting in serious injury or death.

2. Press **Key 2 - CO2 Calibration** on the Gas Calibration Screen (Figure 3.16).

Figure 3.16

1-CH_4 Calibration
2-CO_2 Calibration
3-O_2 Calibration
4-Factory Settings

© 1994 Landfill Control Technologies, Corporate Headquarters 6055 E. Washington Blvd., Commerce, CA 94110 U.S.A. GA-90 is a product trademark.

3. There is no Zero CO2 function as there is in the methane or oxygen calibration procedures. The following CO2 Span Screen will appear (Figure 3.17).

Figure 3.17

```
                    1-Enter
                     gas con
+00.0% CO2 Gas 5-Pump
                    0-Exit
```

4. Press **KEY 1-Enter Gas Con** and the Enter Concentration Screen shown in Figure 3.18 appears. Input the carbon dioxide concentration of the calibration gas from the keyboard of the GA-90 (Figure 3.18). Enter the percentage as three digits XX.X%. 15% carbon dioxide would be input as 150. The GA-90 will automatically place a decimal point in the proper position. After the percentage is entered, press **KEY 0 - Exit.**

Figure 3.18

```
Enter Concentration
of Calibration Gas
CO2 ?-.-%
                0-Exit
```

5. The next screen, Figure 3.19, is the Caution Re-Calibrate Screen.

Figure 3.19

```
Caution Re-calibrate
Are you sure?

1-Yes          2-No
```

6. Press **KEY 1-Yes** and one of two messages will appear (Figure 3.20 or Figure 3.21).

© 1994 Landfill Control Technologies, Corporate Headquarters 6055 E. Washington Blvd., Commerce, CA 94110 U.S.A. GA-90 is a product trademark.

Figure 3.20

```
Calibration gas NOT
accepted.  Retry?

1-Yes          2-No
```

Figure 3.21

```
Re-calibrated OK
```

7. If the Calibration OK Screen (Figure 3.21) flashed, proceed to step 9.

8. If the Calibration Gas Not Accepted Screen appears (Figure 3.20) press **Key 1-Yes** and re-enter methane percentage. If Calibration Gas Not Accepted Screen still appears, press **KEY 0-No** and start procedure again. If problem persists, proceed to Factory Settings later in this chapter.

9. If no further calibration is required go to step 11.

10. If oxygen **(OPTIONAL)** is to be calibrated, press **KEY 0.** The Gas Calibration Screen (Figure 3.16) should appear. Perform following O2 calibration instructions.

11. Turn off calibration gas cylinder. Remove gas hose attached to gas sample port. Leave exhaust port hose connnected. Turn on pump and purge instrument with air for 60 seconds (CO2 concentration should read 0.00%). You have successfully completed a CO2 field calibration. Press **KEY 0** twice to return to Main Menu Screen.

OXYGEN (O2) CALIBRATION (OPTIONAL FEATURE)

Zero Oxygen

1. There are two calibration gas mixtures used for the calibration of oxygen. The methane/carbon dioxide calibration gas previously used to calibrate the methane and carbon dioxide is used to Zero oxygen because there is no oxygen in the mixture. A second calibration gas with a mixture of oxygen and nitrogen will be used to set the oxygen level in the next section. Because the calibration gas used in this calibration contains methane, the warning below must be followed before proceeding with the following procedure.

© 1994 Landfill Control Technologies, Corporate Headquarters 6055 E. Washington Blvd., Commerce, CA 94110 U.S.A. GA-90 is a product trademark.

WARNING: The GA-90 is not certified as intrinsically safe. The following procedure MUST NOT be done in a confined area (such as well vaults, underground and indoors) or where there is any chance of sparking or ignition. No smoking, exposed lighting, or other sources of ignition should be in the area. On the GA-90, ensure that exhaust gas is safe, not blocked and properly vented away from you. Ensure that no leaks are present. Unless all above conditions are maintained, an explosion could occur resulting in serious injury or death.

2. Press **Key 3-O2 Calibration** on the Gas Calibration Screen (Figure 3.22).

Figure 3.22

```
1-CH4 Calibration
2-CO2 Calibration
3-O2 Calibration
4-Factory Settings
```

3. The Oxygen Calibration Screen will appear (Figure 3.23).

Figure 3.23

```
1-Zero O2
2-Calibrate O2 Span
0-Previous Menu
```

4. Pressing **KEY 1-Zero O2** will bring up the Zero Oxygen Screen (Figure 3.24).

Figure 3.24

```
                    1-Zero
                      Level
+00.2% O2 Gas       5-Pump
                    0-Exit
```

5. Read the oxygen Gas Concentration on the screen. It should be very near 00.0 % and not changing more than a few tenths of one percent.

Note: Even if the screen displays 00.0% oxygen, proceed with step 6 below, the Oxygen must be zeroed anyway.

© 1994 Landfill Control Technologies, Corporate Headquarters 6055 E. Washington Blvd., Commerce, CA 94110 U.S.A. GA-90 is a product trademark.

6. Press **KEY 1-Zero level** and the one of following screens (Figure 3.25 or Figure 3.26) are displayed for three seconds before returning to the Zero Oxygen Screen shown above. If the O2 Zeroed Screen was displayed proceed to step 9 below.

Figure 3.25

```
Level NOT Zeroed
Please refer to
Operating Manual
```

Figure 3.26

O_2 Zeroed

7. If the Oxygen NOT Zeroed Screen was displayed, return to the Oxygen Calibration Screen. Recheck hose for air leaks and that the calibration gas contains no oxygen. The gas used must be oxygen free. Connect the correct gas (if necessary) and re-zero the oxygen. If the problem continues, proceed to instructions contained in this section for Factory Settings.

8. If the Oxygen Zeroed OK Screen flashed, turn off the calibration gas.

9. Remove the hose to the GA-90 from the flow regulator.

10. Press **KEY 0-Exit** to return to the Oxygen Calibration Screen Shown in Figure 3.27 and proceed to the next section.

Span Oxygen (OPTIONAL FEATURE)

1. From the O2 Calibration Screen (Figure 3.27), press **KEY 2-Calibrate O2 Span** and the Oxygen Calibration Screen (Figure 3.28) will appear.

Figure 3.27

1-Zero O_2
2-Calibrate O_2 Span
0-Previous Menu

© 1994 Landfill Control Technologies, Corporate Headquarters 6055 E. Washington Blvd., Commerce, CA 94110 U.S.A. GA-90 is a product trademark.

Figure 3.28

```
                    1-Enter
                      gas con
+00.0% O2 Gas       5-Pump
                    0-Exit
```

2. Change the Calibration Gas mixture to Oxygen/Nitrogen. Install the regulator/flow meter on the new Calibration Gas mixture as directed previously in the section Setting Up the Equipment.
3. Connect the 1/4" Tygon tubing from the calibration gas regulator/flowmeter to the GA-90 gas sample port (Figure 1.1). Attach, if not already attached, the Tygon tubing to the exhaust port of the GA-90. Direct the exhaust away from you and out of the immediate area.
4. Turn on the calibration gas mixture of oxygen and nitrogen.
5. Check the calibration gas flow (300 cc) and pressure (2 psig) if not using the LANDTEC regulator.
6. Allow the calibration gas to flow into the GA-90 for two minutes or until O2 reading stablizes.
7. After two minutes, read the oxygen Gas Concentration on the screen. It should be stable and not changing more than a few tenths of one percent.
8. Press **KEY 1-Enter Gas Con** and input the oxygen concentration of the CALIBRATION GAS from the keyboard of the GA-90 (Figure 3.29). Enter the percentage as three digits XX.X%. 4% oxygen would be input as 040. The GA-90 will automatically place a decimal point in the proper position. After the percentage is entered, press **KEY 0-Exit**.

Figure 3.29

```
Enter Concentration
of Calibration Gas
O2 ?-.-%
                0-Exit
```

9. The next screen to appear, Figure 3.30, is the Caution Re-Calibrate Screen.

© 1994 Landfill Control Technologies, Corporate Headquarters 6055 E. Washington Blvd., Commerce, CA 94110 U.S.A. GA-90 is a product trademark.

Figure 3.30

```
Caution Re-calibrate
Are you sure?

1-Yes          2-No
```

10. Press **KEY 1-Yes** and one of two screens will appear (Figure 3.31 or Figure 3.32). If the Calibration OK Screen flashed, proceed to step 14.

Figure 3.31

```
Calibration gas NOT
accepted.  Retry?

1-Yes          2-No
```

Figure 3.32

```
Re-Calibrated OK
```

11. If the Calibration gas NOT Accepted Screen appears, several things could have happened. Press **KEY 1-Yes** and enter the percentage of oxygen in the Calibration Gas. It is possible the wrong percentage was input. If on a second attempt this has not worked, press **KEY 0-No** and return to the oxygen Calibration Menu. Start the procedure over again — Zero oxygen and then calibrate oxygen. If there are still problems, proceed to the Factory Settings section in this section.

12. Press **KEY 0-Exit** and return to the Oxygen Calibration Screen shown on the following page.

13. Turn off the Calibration Gas. Remove the Calibration Gas hose attached to the gas sample port. Leave the exhaust port hose connected. Press **KEY 5-Pump** to purge instrument with air for 60 seconds.

14. Optional Step Upper O2 Scale Calibration- The GA-90 was just calibrated on 0-5% oxygen scale. The 5-21% scale can be calibrated using normal air. While on the Oxygen Calibration Screen press **KEY 5-Pump** and enter an O2 concentration of 21.0% even though the screen will seldom reach more than 20.7%. You have just calibrated the upper oxygen scale.

© 1994 Landfill Control Technologies, Corporate Headquarters 6055 E. Washington Blvd., Commerce, CA 94110 U.S.A. GA-90 is a product trademark.

Figure 3.33

```
                    1-Zero
                     Level
+20.6% O2 Gas       5-Pump
                    0-Exit
```

15. To exit, press **KEY 0** until the main menu appears. You have successfully completed an oxygen Field Calibration.

Factory Settings Calibration

As previously mentioned, the GA-90 can be returned to its original Factory Settings Calibration. This procedure eliminates the field calibration done in the above procedures. It is sometimes necessary to bring the GA-90 back to factory settings before trying to field calibrate the unit.

1. From the Gas Calibration Screen, Figure 3.34, press **KEY 4-Factory Settings.**

Figure 3.34

```
1-CH4 Calibration
2-CO2 Calibration
3-O2 Calibration
4-Factory Settings
```

2. The Caution Screen, Figure 3.35, shown below will be displayed. If **KEY 0 - No** is pressed, screen represented in Figure 3.36 will appear for two seconds and the Gas Calibration Screen will return.

Figure 3.35

```
CAUTION Return to
Factory Setting of
Calibration & Zero
1-Yes        2-No
```

© 1994 Landfill Control Technologies, Corporate Headquarters 6055 E. Washington Blvd., Commerce, CA 94110 U.S.A. GA-90 is a product trademark.

Figure 3.36

Factory Setting NOT Set

3. Press **KEY 1-Yes** and the screen shown in Figure 3.37 is displayed for three seconds before returning to the Gas Calibration Screen shown in step 1.

Figure 3.37

Factory Setting Set OK

4. After loading the factory setting, the methane and oxygen calibration **must be rezeroed prior to use.**

After Completing Gas Calibrations

Additional General Utilities functions should be addressed after the GA-90 is field calibrated. These functions are available from the General Utilities Menu and include:

KEY 1-Check Time/Date—to make sure the data collected is properly date stamped.

KEY 4-Check Memory—to see if there is enough space in the GA-90 for the reading you plan to do. Otherwise the memory will have to be cleared.

KEY 3-Set Gas Alarms—if you wish to have the GA-90 alert you to unusual gas conditions or turn alarms off.

After completing the gas calibrations, you can begin to read gas levels. Go to Chapter 5-Read Gas Levels, of this manual.

© 1994 Landfill Control Technologies, Corporate Headquarters 6055 E. Washington Blvd., Commerce, CA 94110 U.S.A. GA-90 is a product trademark.

MODEL 128 ORGANIC VAPOR ANALYZER CALIBRATION PROCEDURE

FOXBORO # 1-800-321-0322

Instruction

MI
611-132
December 1985

Model OVA 128
CENTURY Organic Vapor Analyzer

FIGURE 1
PORTABLE ORGANIC VAPOR ANALYZER

INTRODUCTION 1

GENERAL DESCRIPTION 2
Major Features 3
Standard Accessories 4
Particulate Filters 4
Specifications 4

FOXBORO®

© 1985 by the Foxboro Company

® Registered Trademark

CALIBRATION

Recalibration to Various Organic Vapors

The OVA 128 is capable of responding to nearly all organic compounds. At the time of manufacture, the analyzer is calibrated to mixtures of methane in air. For precise analysis it is necessary to recalibrate with the specific compound of interest. The GAS SELECT control is used to set the electronic gain for a particular compound.

The instrument is recalibrated using a mixture of a specific vapor in air, with known concentration. After the instrument is in operation and the normal background is zeroed, draw a sample of the calibration gas into the instrument. The GAS SELECT Knob on the panel is then used to set the readout meter indication to correspond to the concentration of the calibation gas mixture.

The instrument has now been calibrated to the vapor mixture being used. After this adjustment, the setting on the "digidial" should be recorded for that particular organic vapor compound. This exercise can be performed for a large variety of compounds, thereby generating a "library" which can be used for future reference without need for additional calibration standards.

To read a particular compound, the GAS SELECT control is turned to the predetermined setting for the compound. Calibration on any one range automatically calibrates the other two ranges.

Using Empirical Data

Relative response data can be used to estimate the concentration of a vapor without need to recalibrate the analyzer. With the instrument calibrated to methane, obtain the concentration reading for a calibration sample of the test vapor. The response factor (R) in percent, for that vapor is:

$$R = \frac{\text{Actual Concentration}}{\text{Measured Concentration}}$$

To determine the concentration of an unknown sample of that vapor, multiply the measured concentration by R.

Calibration Standards

Commercial Standards

Commercially available standard samples offer the most convenience and are recommended for the most precise analyses. Always remember to obtain the desired vapor in an air background. Samples should be drawn from the cylinder into a collapsed sample bag, then drawn from the bag by the instrument to prevent a pressure or vacuum at the sample inlet.

Preparation of Standards

The following procedure is for generating calibration standards as an alternative to using commercial mixtures.

Obtain a five (5) gallon glass bottle and determine its volume by measuring the volume of water needed to fill it (use of a 1000 mL graduated cylinder is convenient). Another approach is to weigh the empty bottle, fill it with water and weigh again. The difference between the two values is the weight of water. By multiplying the weight of water in pounds by 0.455, obtain the volume of the bottle in liters. Empty the water and allow the bottle to dry. Place a one-foot piece of Teflon tubing in the flask to aid in mixing the vapors uniformly with the air. The volume of such a bottle should be about 20 liters, which is 20,000 mL. If the volume were 20,000 mL, then a 2 mL sample of a gas would be equivalent to 200 mL per 2 million mL or 100 ppm (V/V). Use of a gas tight Syringe, readable in 0.01 mL, allows the preparation of mixtures in the 1-2 ppm range, which are sufficient for the quantitative estimation of concentrations. A plastic stopper is loosely fitted to the tip of the bottle. The needle of the syringe is placed inside the jug neck and the stopper squeezed against the needle to decrease leakage during sample introduction. Inject the sample into the bottle and withdraw the needle without removing the stopper. Tighten the stopper and shake the bottle for a few minutes with sufficient vigor that the plastic tubing in the bottle moves around to ensure good mixture of the vapors with the air.

Calculations

$$\text{Injection} = \frac{\text{Volume Concentration X Molecular Weight X System Volume}}{\text{Density X Molar Volume at STP*}}$$

$$= \frac{(C)\ (MW)\ (V)}{(D)\ (V)}$$

Using the Ideal Gas Law, PV=RT, the molar volume of any gas at STP (25°C and 1 atm) is:

$$V = \frac{RT}{P} = \frac{\text{Universal Gas Constant x Temperature}}{\text{Pressure}}$$

$$= \frac{\left[(0.08206\ \frac{\text{litre atm}}{\text{mol K}})\right](298.15\ \text{K})}{1\ \text{atm}}$$

$$= (24.47\ \text{L})\ (\text{mol}^{-1})$$

Therefore, the injection volume necessary to prepare 1 liter of a 100 ppm sample of hexane would be:

$$\text{Injection Volume} = \frac{(100\ \text{ppm})\ [(86.18\ \text{g})\ (\text{mol}^{-1})]\ (1\ \text{liter})}{[(0.659\ \text{g})\ (\text{mL}^{-1})]\ [(24.47\ \text{L})\ (\text{mol}^{-1})]\ [(1000\ \text{mL})\ (\text{l}^{-1})]}$$

$$= 0.534\ \mu\text{L}$$

* STP - Standard Temperature and Pressure

Primary Calibration for Methane

Internal electronic adjustments are provided to calibrate and align the circuits. After initial factory calibration, it should not be necessary to repeat the calibration unless the analyzer undergoes repairs which affect calibration. If the OVA 128 will be extensively used for analysis of a sample other than methane, recalibration of the electronics (after resetting the GAS SELECT CONTROL) may result in better accuracy. See Recalibration to Various Organic Vapors above.

Primary calibration of this instrument is accomplished at the factory using methane-in-air, sample gases.

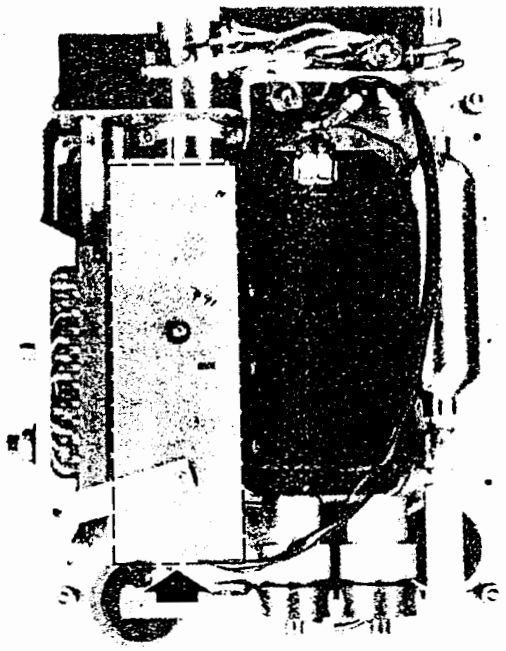

R-31 R-32 R-33 R-38

FIGURE 4
LOCATION OF ELECTRONIC ADJUSTMENTS

Calibration Using Known Samples for Each Range *(Refer to Figure 4)*

The accuracy stated under Specifications is obtained when the instrument is calibrated with known concentrations for each range. Prepare separate samples of methane-in-air in these concentration ranges: 7 to 10 ppm, 90 to 100 ppm, and 900 to 1000 ppm. Calibrate the instrument as follows:

a) Place the instrument in normal operation and allow a minimum of 15 minutes for warm-up and stabilization.

b) Set the GAS SELECT control to 300.

c) Set the CALIBRATE Switch to X1.

d) Set the CALIBRATE ADJUST (Zero) Knob so that the meter reads zero.

e) Check that the meter reads zero on the X10 and X100 ranges.

f) Set the CALIBRATE Switch to X1 and introduce the sample with known concentration in the 7 to 10 ppm range.

g) Adjust R31 so that the meter reading corresponds to the sample concentration.

h) Set the CALIBRATE Switch to X10 and introduce the sample with known concentration in the 90 to 100 ppm range.

i) Adjust R32 so that the meter reading corresponds to the sample concentration.

j) Set the CALIBRATE Switch to X100 and introduce the sample with known concentration in the 900 to 1000 ppm range.

k) Adjust R33 so that the meter reading corresponds to the sample concentration.

l) The instrument is now calibrated for methane and ready for service.

Calibration Using a Single Sample Calibration *(Refer to Figure 4)*

Calibration may be accomplished using a single known sample of methane in air in the range of 90 to 100 ppm. This may not provide the accuracy stated under specifications but is adequate for field survey work.

a) Place instrument in normal operation with CALIBRATE Switch set to X10 and GAS SELECT control set to 300.

b) Use the CALIBRATE ADJUST (zero Knob to adjust the meter reading to zero.

c) Introduce a methane sample of a known concentration (between 90 and 100 ppm not to exceed 100 ppm) and adjust trimpot R-32 so the meter reading corresponds to the known sample.

d) This sets the instrument gain for methane with the panel mounted gain adjustment (GAS SELECT) set at a reference number of 300.

e) Turn off HYDROGEN SUPPLY VALVE to put out flame.

f) Leave CALIBRATE Switch on X10 position and use CALIBRATE ADJUST (zero) Knob to adjust meter reading to 4 ppm.

g) Place CALIBRATE Switch in X1 position and using trimpot R-31 adjust meter reading to 4 ppm.

h) Move CALIBRATE Switch to X10 position again. Use CALIBRATE ADJUST (zero) Knob to adjust meter to a reading of 40 ppm.

i) Move CALIBRATE Switch to X100 position and use trimpot R-33 to adjust meter reading to 40 ppm.

j) Move CALIBRATE ADJUST (zero) Knob to adjust meter reading to zero.

k) Unit is now balanced from range to range, calibrated to methane, and ready to be placed in normal service.

SOP A6 RESPIROMETRY TESTING

The document Principles and Practices of Bioventing will be used as guidance for performing respirometry testing (Leeson and Hinchee 1995).

A6.1 PURPOSE

Respirometry testing will be conducted in order to monitor the performance of the SWMU 136 bioventing system.

A6.2 PROCEDURE

Oxygen, carbon dioxide, and methane gases and hydrocarbon concentrations will be monitored at the bioventing well. A Century OVA model 128 or equivalent flame-ionization detector will be used to measure hydrocarbon concentrations and a Land Control Technologies GA-90 will be used to measure the remaining gases.

Before a reading is taken, approximately 5 well volumes are removed from the well by reversing the blower and running for 10 to 15 minutes. The probe is then purged for a few minutes until the gas levels are stable. Initial readings are taken every 2 hours and then progressively over 4- to 8-hour intervals. If oxygen uptake is rapid, more frequent monitoring may be required. If it is slower, less frequent readings may be acceptable. The experiment usually is terminated when the soil gas oxygen concentration is approximately 5% (Leeson and Hinchee 1995).

A6.2.1 Interpretation of Respirometry Test Results

Oxygen utilization rates are determined from data obtained during the respirometry test. The rates are calculated as the zero order relationship between percent oxygen and time. Typically, a rapid linear decrease in oxygen is observed, followed by a lag period once oxygen concentrations drop below approximately 5%. To calculate oxygen utilization rates, only the first linear portion of the data is used because this represents oxygen utilization when oxygen is not limiting, as is the case during active bioventing (Leeson and Hinchee 1995).

To estimate hydrocarbon biodegradation rates from the oxygen utilization rates, a stoichiometric relationship for the oxidation of the contaminant is used. For hydrocarbons, hexane is used as the representative hydrocarbon. The stoichiometric relationship used to determine petroleum degradation rates is (Leeson and Hinchee 1995):

$$C_6H_{14} + 9.5O_2 \rightarrow 6CO_2 + 7H_2O$$

Based on the utilization rates (% oxygen per day), the biodegradation rate in terms of mg hexane-equivalent per kg of soil per day is estimated using the following equation (Leeson and Hinchee 1995):

$$k_B = \frac{-k_o \, \Theta_a \, p_{O2} \, C \, (0.01)}{p_k}$$

Where: k_B = biodegradtion rate (mg/kg-day)

k_o = oxygen utilization rate (%/day)

Θ_a = gas-filled pore space (m^3 gas/cm^3 soil)

p_{O2} = density of oxygen (mg/L)

C = mass ratio of hydrocarbons to oxygen

p_k = soil bulk density (g/cm3)

These terms may be derived through either direct measurement or calculation. The oxygen utilization rate, k_o, is directly measured with the GA-90 during the respirometry test. The ratio of hydrocarbons to oxygen required for mineralization, C, is calculated to be 0.29 based on the stoichiometry for hexane. This neglects any conversion to biomass, which probably is small and difficult, if not impossible, to measure. The density of oxygen, p_{O2}, is assumed to be 1,331 mg/L. This assumption is based on a vadose zone air temperature of 68°F, which will not vary with seasonal changes. The bulk density of soil, p_k, is assumed to be 1.36 dry g/cm^3, which is the density for wind deposited silt. The gas-filled porosity, Θ_a, is calibrated with the following equations (Leeson and Hinchee 1995):

$$\Theta_a = \Theta - \Theta_w$$

Where: $\Theta = 1 - p_k / 2.65\ g/cm^3 = 1 - 1.36\ g\ dry\ soil/cm^3 / 2.65\ g/cm^3 = 0.49$

$\Theta_w = M\ (p_k / 2.65\ g/cm^3)$

Where: M = soil moisture (g moisture/g soil); assume M of contaminated zone is 0.40 g/g

$\Theta_w = 0.40\ (1.36\ g\ dry\ soil/cm^3 / 2.65\ g/cm^3) = 0.21$

Therefore: $\Theta_a = 0.49 - 0.21 = 0.28$

Therefore: $k_B = \dfrac{-k_o\ (0.28)\ (1{,}331 mg/L)\ (0.29)\ (0.01)}{1.36\ g\ dry\ soil/cm^3} = -0.79\ k_o$

A6.2.2 Field Instrumentation and Measurement

A Century OVA model 128 or equivalent flame-ionization detector and Land Control Technologies GA-90 will be used to measure hydrocarbon concentrations and gas levels, respectively. After each instrument is connected to the well head, they will purge for a few minutes until the readings stabilized. After the readings have stabilized, they will be recorded on the appropriate site visitation form, Appendix B.

Oxygen, Carbon Dioxide, and Methane

The GA-90 will be calibrated each day prior to performing respirometry testing. The calibration and maintenance of the GA-90 will be performed in accordance with SOP A5, Calibration Procedures for Field Equipment.

Hydrocarbon Concentration

The Century OVA model 128 or equivalent with range settings of 100, 1,000, and 10,000 ppm will be used to measure hydrocarbon concentrations. The analyzer will be calibrated each day in accordance with SOP A5, Calibration Procedures for Field Equipment, prior to performing respirometry testing against two hexane calibration gases (500 ppm and 4,400 ppm). The

calibration will require mylar bags and at least 10% oxygen concentration. When the oxygen drops below 10%, a dilution fitting must be added to provide adequate oxygen for analysis. The Trace-Techtor has a dilution fitting that can be used to calibrate the instrument in the low-concentration range.

SOP A7 BOREHOLE AND SAMPLE LOGGING

A7.1 PURPOSE

This SOP discusses the procedures for logging soil samples. Soil samples will be logged on the Borehole and Sample Log, Figure A7-1, to determine if contamination is confined to specific geologic sections. The vertical log scale will be 1 in. equals 2 ft.

A7.2 PROCEDURE

Drilling Logs and Documentation

Each boring will be fully described on a boring log similar or equivalent to that shown in Figure A7-1. The rig geologist will log the boring as it is being drilled by recording relevant data, listed below, on either the appropriate boring log or in a bound field notebook. Boring log forms may be transcribed from a field notebook, but must be completed at a minimum on a daily basis. Data which will be included in the logs, when applicable, are:

- Identifying number and location of each boring.
- Depths in feet and tenths of feet.
- Soil classifications in accordance with the USCS. These classifications will be prepared in the field by the geologist and will be subject to revision based on laboratory tests or subsequent review.
- Rock classifications in accordance with the procedures and guidelines described in the below section on Rock Classification.
- A full description of soil samples. The description will include but not be limited to the USCS two-letter classification, plus a more complete verbal description of color, consistency, grain size and size distribution.
- A general description of the drilling equipment used. This description, including such information as rod size, bit type, pump type, rig manufacturer, and model, may be provided in a general legend.
- Dates and times of start and completion of boring.
- Names of Contractor, driller and rig geologist.
- Size and length of casing or auger used in each borehole.
- Observations of visible contamination for each sample or from cuttings that appear contaminated.
- Field instrument readings.

Foster Wheeler Environmental Corporation
143 Union Blvd., Suite 1010
Lakewood, Colorado 80228

Borehole and Sample Log

Project **Holloman AFB** Site Hole No.

Company name Drilling subcontractor

Location Name of driller

Manufacturer's designation of drill

Sizes and types of drilling and sampling equipment

Hole location Surface elevation

Date started Date completed

Overburden thickness Depth groundwater encountered

Depth drilled into rock Depth to water and elapsed time after drilling completed

Total depth of hole Other water level measurements (specify)

Geotechnical samples
- Disturbed
- Undisturbed

Total number of core boxes

Samples for chemical analysis
- VOCs
- Metals
- Other (specify)
- Other(specify
- Other (specify)

Total core recovery %

Disposition of hole
- Backfilled
- Monitoring well
- Other (specify)

Signature of inspector

Elevation	Depth (ft)	Description of Materials	Field Screening Results	Geotech Sample or Core Box No.	Analytical Sample No.	Blow Counts	Remarks
	0						
	2						
	4						
	6						
	8						

Figure A7-1 Borehole and Sample Log

Foster Wheeler Environmental Corporation
143 Union Blvd., Suite 1010
Lakewood, Colorado 80228

Borehole and Sample Log

Project **Holloman AFB** Site Hole No. Inspector

Elevation	Depth (ft)	Description of Materials	Field Screening Results	Geotech Sample or Core Box No.	Analytical Sample No.	Blow Counts	Remarks
	8						
	10						
	12						
	14						
	16						
	18						
	20						
	22						
	24						
	26						

Figure A7-1 Borehole and Sample Log

As the boring is drilled, the rig geologist will evaluate the drill cuttings, drill performance, etc., to determine appropriate stratigraphic definitions or distinctions within the soil column. Such contacts or breaks between strata must be determined by the rig geologist and indicated on the boring log. In general, a stratigraphic unit contains only similar soils which can be classified within the same two-letter USCS classification category symbol. In some cases, significant differences in soil color, grain size distribution, strength, etc., would be sufficient to classify soils having the same two-letter USCS classification category symbol into two or more distinct strata.

After the rig geologist has indicated the appropriate stratigraphic breaks on the log, he/she should develop and record an appropriate description for each defined stratigraphic unit. Each description should contain information about the color, grain size distribution, consistency, moisture, and the appropriate two-letter USCS classification category symbol.

Classification of Soils

All classification data should be written directly on the boring log (if there is enough space) or in a field notebook. The method of deriving the classification should be described, or reference to this guideline or other manuals should be made. Handling of samples during soil classification should be coordinated with chemical sampling activities, if appropriate.

USCS Classification

Soils are to be classified according to the USCS. This method of classification is detailed in Figure A7-2. This method of classification identifies soil types on the basis of grain size and liquid limits, and categorizes them by two-letter symbols.

In the USCS system, fine-grained soils, or fines, are classified as those which will pass through a No. 200 U.S. standard sieve (0.074 mm) and are of two types: silt (M) and clay (C). Some classification systems define size ranges for these soil particles, but for field classification purposes, they are identified by their respective behaviors only. Organic material (O) is common component of soil but has no size range, and is recognized by its composition.

Classification of Soils for Engineering Purposes
ASTM Designation D–2487

Major Divisions			Group Symbols	Typical Names	Classification Criteria	
Coarse-Grained Soils More than 50% retained on No. 200 sieve	Gravels 50% or more of coarse fraction retained on No. 4 sieve	Clean Gravels	*GW*	Well-graded gravels and gravel-sand mixtures, little or no fines	$C_u = D_{60}/D_{10}$ Greater than 4; $C_z = \frac{(D_{30})^2}{D_{10} \times D_{60}}$ Between 1 and 3	
			GP	Poorly graded gravels and gravel-sand mixtures, little or no fines	Not meeting both criteria for *GW*	
		Gravels with Fines	*GM*	Silty gravels, gravel-sand-silt mixtures	Atterberg limits plot below "*A*" line or plasticity index less than 4	Atterberg limits plotting in hatched area are borderline classifications requiring use of dual symbols
			GC	Clayey gravels, gravel-sand-clay mixtures	Atterberg limits plot above "*A*" line and plasticity index greater than 7	
	Sands More than 50% of coarse fraction passes No. 4 sieve	Clean Sands	*SW*	Well-graded sands and gravelly sands, little or no fines	$C_u = D_{60}/D_{10}$ Greater than 6; $C_z = \frac{(D_{30})^2}{D_{10} \times D_{60}}$ Between 1 and 3	
			SP	Poorly graded sands and gravelly sands, little or no fines	Not meeting both criteria for *SW*	
		Sands with Fines	*SM*	Silty sands, sand-silt mixtures	Atterberg limits plot below "*A*" line or plasticity index less than 4	Atterberg limits plotting in hatched area are borderline classifications requiring use of dual symbols
			SC	Clayey sands, sand-clay mixtures	Atterberg limits plot above "*A*" line and plasticity index greater than 7	
Fine-Grained Soils 50% or more passes No. 200 sieve	Silts and Clays Liquid limit 50% or less		*ML*	Inorganic silts, very fine sands, rock flour, silty or clayey fine sands		
			CL	Inorganic clays of low to medium plasticity, gravelly clays, sandy clays, silty clays, lean clays		
			OL	Organic silts and organic silty clays of low plasticity		
	Silts and Clays Liquid limit greater than 50%		*MH*	Inorganic silts, micaceous or diatomaceous fine sands or silts, elastic silts		
			CH	Inorganic clays of high plasticity, fat clays		
			OH	Organic clays of medium to high plasticity		
Highly organic soils			*Pt*	Peat, muck and other highly organic soils	Visual-manual identification	

Classification on basis of percentage of fines
Less than 5% Pass No. 200 sieve: *GW, GP, SW, SP*
More than 12% Pass No. 200 sieve: *GM, GC, SM, SC*
5% to 12% Pass No. 200 sieve: Borderline classification requiring use of dual symbols

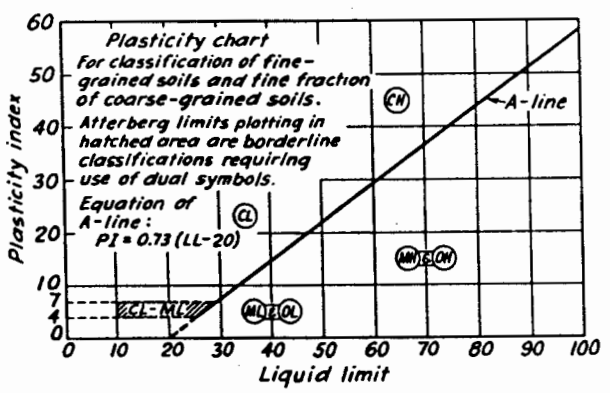

Figure A7-2 Unified Soil Classification System

Gravely soils are identified by a (G) as the first letter in the two-letter symbol, whereas sandy soils are identified with an (S). The term "rock fragments" should be used to indicate granular materials resulting from the breakup of rock. These materials are normally angular, indicating little or no transport from their source. When the term "rock fragments" is used it should be followed by a size designation, such as "1/4" - "1/2" diameter" or "coarse-sand size" either immediately after the entry or in the remarks column. The USCS classification would not be affected by this variation in terms.

The second letter in the two-letter USCS symbol provides information about the grain size distribution of granular soils, or the plasticity characteristics of fine-grained soils. These second-letter modifiers are (P) well sorted, (W) well graded/poorly sorted, (C) clayey, (M) silty, (L) low plasticity, or (H) high plasticity. Note that the term "poorly graded" implies a uniform grain size distribution and is the same as "well sorted."

Color

Soil colors should be described utilizing a single color descriptor preceded, when necessary, by a modifier to denote variations in shade or color mixtures. A soil could therefore be referred to as "gray" or "light gray" or "blue-gray." Since color can be utilized in correlating units between sampling locations, it is important that color descriptions be kept consistent throughout field operations.

Colors must be described while the sample is still moist. Soil samples should be broken or split vertically to describe colors. Soil sampling devices tend to smear the sample surface creating color differences between the sample interior and exterior. Munsell Color Charts or equivalent must be used.

Relative Density and Consistency

To classify the relative density and/or consistency of a soil, the geologist must first identify the soil type. Granular soils contain predominantly sands and gravels and are generally noncohesive (particles do not adhere well when compressed). Finer grained soils (silts and clays) are cohesive (particles will adhere together when compressed).

The density of noncohesive, granular soils is classified according to standard penetration resistances obtained from split-spoon sampling methods. These designations are:

Designation	Standard Penetration Resistance (blows per foot)
Very loose	0 to 4
Loose	5 to 10
Medium dense	11 to 30
Dense	31 to 50
Very dense	Over 50

Standard penetration resistance is the number of blows required to drive a split-barrel sampler with a 2-in. outside diameter 12 in. into the material using a 140-lb. hammer falling freely through 30 in. The sampler is driven through an 18- or 24-in. sample interval and number of blows is recorded for each 6-in. increment. The density designation of granular soils is obtained by adding the number of blows required to penetrate the second and third 6-in. of each sample interval. It is important to note that if gravel or rock fragments are broken by the sampler or if rock fragments are logged in the tip, the resulting blow count will be erroneously high, reflecting a higher density than actually exists. This should be noted on the log and referenced to the sample number.

The consistency of cohesive soils is determined either by blow counts or most accurately by a pocket penetrometer or field Torvane device in accordance with ASTM D2573-72 - Method for Field Vane Sheer Text in Cohesive Soil. The Standard Penetration Resistance can be applied to cohesive soils as follows:

Designation	SPT (blows/foot)
Very soft	<2
Soft	2-4
Medium soft	4-8
Stiff	8-15
Hard	>30

The pocket penetrometer method is conducted on a selected sample of the soil, preferably the lowest 0.5 ft of the sample in the split-spoon sampler. The sample should be broken in half and the penetrometer pushed into the end of the sample to determine the consistency. Do not determine consistency by attempting to penetrate a rock fragment. If the sample is decomposed rock, it is classified as a soft, decomposed rock fragment rather than a hard soil. The pocket penetrometer or Torvane may be used in the conjunction with blow counts to determine cohesive soil consistency.

Soil Component

In nature, soils are comprised of particles of varying size and shape and are combinations of the various soil types. Figure A7-2 lists grain size classifications to be used in describing soils or rocks. The following terms are useful in the description of soil components:

The Identifying Proportion of the Component	Defining Range of Percentages by Weight
trace	0 - 10%
little	11 - 20%
some	21 - 35%
"and"	36 - 50%

Moisture

Moisture content is estimated in the field according to four categories: dry, moist, wet, and saturated. In dry soil, there appears to be little or no water. Saturated samples obviously have all the water they can hold. Moist and wet classifications are somewhat subjective and often are determined by the individual's judgment. A suggested parameter for judging this in a fine-grained soil would be calling a soil wet if rolling it in the hand or on a porous surface liberates

water, i.e., dirties or muddies the surface. Whatever method is adopted for describing moisture, it is important that the method used by an individual remains consistent throughout an entire drilling job.

Laboratory or field tests for water content should be performed if the natural water content is important.

Stratification

Stratification can only be determined after the split-spoon sampler is opened. The stratification or bedding thickness for soil and rock is dependent on grain size and composition. The classification to be used for stratification description is described below:

Thickness (Metric)	Approximate English Equivalent	Classification
>1 meter	> 3.3 feet	Very thick
30 cm - 1 meter	1.0 ft - 3.3 ft	Thick Bedded
10 cm - 30 cm	4.0 in - 1.0 ft	Medium Bedded
3 cm - 10 cm	1.0 in - 4 in	Thin Bedded
1 cm - 3 cm	2/5 in - 1 in	Very Thin Bedded
3 mm - 1 cm	1/8 in - 2/5 in	Laminated
1 mm - 3 mm	1/32 in - 1/8 in	Thinly Laminated
<1 mm	<1/32 in	Micro Laminated

Classification of Rocks

Rocks are grouped into three main divisions: sedimentary, igneous and metamorphic. Sedimentary rocks are by far the most predominant type exposed at the earth's surface. The following basic names are applied to the type of rocks found in sedimentary sequences:

- Sandstone - Made up predominantly of granular materials ranging between 1/16- and 2-in. diameter.
- Siltstone - Made up of granular materials less than 1/16 in. diameter. Fractures irregularly.
- Claystone - Very fine grained rock made up of clay and silt-size materials. Fractures irregularly. Very smooth to touch. Generally has irregularly spaced pitting on surface of drilled cores.

- Shale - A fissile, very fine-grained rock. Fractures along bedding planes.
- Limestone - Rock made up predominantly of calcite ($CaCO_3$). Effervesces upon the application of hydrochloric acid.
- Coal - Rock consisting mainly of organic remains.
- Others - Numerous other rock types are present in the geologic section. Their overall abundance is dependent upon the geographical locations.

In classifying a sedimentary rock the following characteristics should be noted:

- Rock Type
- Color
- Bedding Thickness
- Hardness
- Fracturing
- Weathering
- Mineralogy (if discernible)
- Other Characteristics

All classification data should be written directly on the boring log or in a field notebook. The method of deriving the classification should be described or reference to this guideline or other manuals used should be included.

Rock Type

As described previously, there are numerous names for sedimentary rocks. In most cases a rock will be combination of several rock types, therefore a modifier such as sandy siltstone or a silty sandstone can be used. The modifier indicates that a significant portion of the rock type is composed of the modifier. Other modifiers can include carbonaceous, calcareous, siliceous, etc.

Grain diameters are used for the classification of classic sedimentary rock. The following is the Udden - Wenworth classification that will be assigned to sedimentary rocks. The individual boundaries are slightly different than the USCS subdivision for soil classification. For field

determination of grain sizes, a scale can be used for the coarse grained rocks.

Particle Name	Grain Size Diameter
Cobbles	> 64 mm
Pebbles	4 - 64 mm
Granules	2 - 4 mm
Very Coarse Sand	1 - 2 mm
Coarse Sand	0.5 - 1 mm
Medium Sand	0.25 - 0.5 mm
Fine Sand	0.125 - 02.5 mm
Very Fine Sand	0.0625 - 0.125 mm
Silt	0.0039 - 0.0625 mm
Clay	< 0.0625 mm

Color

The color of a rock can be determined in the same manner as for soil samples. Rock core samples should be classified while wet, when possible, and air-cored samples should be scraped clean of cuttings prior to color classifications. Munsell Color Charts or equivalent must be used.

Stratification

The bedding thickness designations applied to soil classification will also be used for rock classification.

Hardness

The hardness of a rock is a function of the compaction, cementation, and mineralogical composition of the rock. A relative scale for sedimentary rock hardness is as follows:

- Soft - Weathered, considerable erosion of core, easily gouged by screwdriver, scratched by fingernail. Soft rock crushes or deforms under pressure of a pressed hammer. This term is always used for the hardness of the saprolite (decomposed rock which occupies the zone between the lowest soil horizon and firm bedrock).
- Medium soft - Slight erosion of core, slightly gouged by screwdriver, or breaks with crumbly edges from single hammer blow.
- Medium hard - No core erosion, easily scratched by screwdriver or breaks with sharp edges from single hammer blow.

Note the difference in usage here of the words "scratch" and "gouge." A scratch should be considered a slight depression in the rock (do not mistake the scraping off of rock flour from drilling with a scratch in the rock itself), while a gouge is much deeper.

Fracturing

The degree of fracturing of a rock is described by measuring the fractures of joint spacing. After eliminating drilling breaks, the average spacing is calculated and the fracturing is described by the following terms:

- Very broken (V. BR.) - Less than 2 in.
- Broke (BR.) - 2 in. to 1 ft.
- Blocky (BL.) - 1 to 3 ft.
- Massive (M.) - 3 to 10 ft.

Artificial breaks can be distinguished from natural partings by several criteria. Drilling breaks are generally relatively sharp edged and the newly exposed rock surfaces are invariably fresher in appearance (less weathered) than natural breaks. Core pieces on each side of a drilling break usually fit perfectly back together, whereas natural breaks may exhibit gaps and clay films or seams, oxidation stains, or mineralization. Do not confuse drill cuttings or drilling mud on a fractured surface with a natural clay film or seam.

The structural integrity of the rock can be approximated by calculating the Rock Quality Designation (RQD) of cores recovered. The RQD is determined by adding the total lengths of all pieces exceeding 4 in. and dividing by the total length of the coring run, to obtain a percentage:

$$RQD = (r/1) \times 100$$

where:

r = Total length of all pieces of the lithologic unit being measured, which are greater than 4 in. in length, and have resulted from natural breaks. Natural breaks include slickensides, joints, compaction slicks, bedding plane partings (not caused by drilling),

friable zones, etc., and

1 = Total length of the coring run.

Weathering

The degree of weathering is a significant parameter that is important in determining weathering profiles and is also useful in engineering designs. The following terms can be applied to distinguish the degree of weathering:

- Fresh - Rock shows little or no weathering effect. Fractures or joints have little or no staining and rock has a bright appearance.
- Slight - Rock has some staining (i.e., discoloration along joints, cracks or exposed surfaces) which may penetrate several centimeters into the rock. Clay filling of joints may occur. Feldspar grains may show some alteration.
- Moderate - Most of the rock, with exception of quartz grains, is stained. Rock is weakened due to weathering and can be easily broken with hammer.
- Severe - All rock, including quartz grains, is stained. Some of the rock is weathered to the extent of becoming a soil. The rock is very weak and crumbly.

Other Characteristics

The following items should be included in the rock description:

- Description of contacts between two rock units. These can be sharp or gradational.
- Description of any cavities or bugs, including fillings, if present.
- Description of any joints or fractures.
- Notation of joints or fractures with depth, any unusual staining (not weathering), approximate angle from horizontal, any mineral filling or coating, degree of weathering and interpretive, relative degree of groundwater movement through the fracture.

As an attachment to the log, additional information should be provided, including an estimation of the degree of cementation and type of cement for granular sedimentary rocks; a description of the texture and fabric of the rock (i.e., the shape and relationship of component particles or crystals); and the structure of macroscopic features of the rock mass. Generally, rock structure is best seen in the outcrop rather than the hand specimen, but some indication of structure (e.g., horizontal or dipping beds, open joints) can be obtained from core samples.

Numerous classification schemes for igneous and metamorphic rocks are available. Compton, 1962 "Manual of Field Geology", John Wiley & Sons, Inc. New York and "Classification of Rocks", Quarterly of the Colorado School of Mines, Volume 50, Number 1, January 1955 are preferred. Igneous and metamorphic rocks that may be encountered at Holloman AFB will be classified according to the procedures outlined in "Classification of Rocks."

Igneous rock classification is based on texture and mineralogy. The distinction between intrusive and extrusive (volcanic) igneous rocks is not specifically addressed by rock classification schemes but is indicated by texture, which is a function of cooling history, and is determined by field relationships. Metamorphic rock classification is based primarily on structure and mineralogy. Directional or nondirectional structure is and important attribute in determining nomenclatures. Because metamorphic rocks derive from preexisting igneous or sedimentary rocks which have undergone a chemical or physical change after their original metamorphic rocks are divided into two groups: (1) those formed by regional metamorphism, and (2) those formed by contact metamorphism (Hurlbut, 1971, "Dana's Manual of Mineralogy, 18th Edition, John Wiley & Sons, Inc.).

Igneous rock will be classified based on granularity or the absence of visible grains, the relationship between grains, the proportions of essential rock-forming minerals, color, and the presence and type of visible accessory minerals.

Metamorphic rocks will be classified on the basis of directional or nondirectional structure, the type of directional structure if any, mineralogy, and color.

In addition to standard classification of igneous and metamorphic rocks, other features will be described, Physical features of crystalline rocks that may contribute to groundwater or contaminant migration will be described and characterized. Joints or fractures will be mapped, widths measure, and their aspect and degree of interconnections described. Fracture-filling

minerals will be described and sampled if necessary to determine potential interactions between these minerals and potential contaminants.

APPENDIX B

REPORTING FORMS

LIST OF FORMS

DAILY QUALITY CONTROL REPORT
SITE VISITATION LOG
USACE ACCIDENT INVESTIGATION REPORT
CHAIN-OF-CUSTODY RECORD
HOLLOMAN LTM/LTO SAMPLE TEMPLATE

DAILY QUALITY CONTROL REPORT

_____

(Firm Name)

DAILY QUALITY CONTROL REPORT

Daily Report No: _____ Date: _____

Contract No. _____

Project Title & Location: _____

Weather: _____ Precipitation: _____ in. ____ Temp.: Min. ____ Max.. ____

1. Contract/Subcontractors and Area of Responsibility:

NUMBER	TRADE	HOURS	EMPLOYER	LOCATION/DESCRIPTION OF WORK

2. Operating Plant or Equipment: (Excluding hand tools)

Plant/Equipment	Date of Arrival/Departure	Date of Safety Check	Hours Used	Hours Idle	Hours Repair

3. Work Performed Today: (Indicate location and description of work performed by prime and/or subcontractors. When network analysis is used, identify work by NAS activity number)

4. Control Activities Performed:
Preparatory Inspections: (Identify feature of work and attach minutes)
Initial Inspections: (Identify feature of work and attach minutes)
Follow-Up Inspections: (List inspections performed, results of inspection compared to specification requirements, and corrective actions taken when deficiencies are noted)

5. Tests Performed and Test Results: (Identify test requirement by paragraph number in specifications and/or sheet number in plans)

6. Material Received: (Note inspection results and storage provided)

7. Submittals Reviewed:

Submittal No.	Spec./Plan Reference	By Whom	Action

8. Off-site Surveillance Activities, Including Action Taken:

_____

_____

_____

_____

_____

_____

9. Job Safety: (List items checked, results, instructions, and corrective actions taken)

_____

_____

_____

_____

_____

_____

10. Remarks: (List instructions received or given, conflict(s) in plans and/or specifications, delays encountered, etc.)

_____

_____

_____

_____

_____

_____

Contractor's Verification: On behalf of the Contractor, I certify this report is complete and correct, and all materials and equipment used and work performed during this reporting period are in compliance with the contract plans and specifications, to the best of my knowledge, except as may be noted above.

_____
Construction Quality Control System Manager Date

SITE VISITATION LOG

HOLLOMAN AFB
SWMU 136
SITE VISITATION LOG
PAGE 1 OF 2

DATE:	NAME:	
OVERALL SYSTEM OPERATING?	YES	NO
CAUSE OF SHUTDOWN:_____		

OPERATION DATA (DAILY):		
Hours of Operation (hrs):		
Ambient Air Temperature (^{o}F):		
Air Flow to Well BV-01 (scfm):		
Discharge Air Pressure (psig):		
Well Head Air Pressure (psig):		
MAINTENANCE (DAILY):		
Diff. Air Filter Pressure (psig):		
Filter Cleaned?	Yes:	No:
Filter Changed?	Yes:	No:
Sand/Debris Removed?	Yes:	No:

Additional Activities Performed: _____

Equipment/Materials Used: _____

HOLLOMAN AFB

SWMU 136

SITE VISITATION LOG

PAGE 2 OF 2

RESPIROMETRY MEASUREMENTS AT BV-01 (MONTHLY)

Time (min)	Oxygen (%)	Carbon Dioxide (%)	Methane (%)	Hydrocarbons (ppm)

DPT SAMPLES (BIANNUALLY)

Sample No.	Location	TRPH	NH_4-N	NO_2/NO_3	TKN	Fe	TP

MAINTENANCE

15,000-20,000 Hours - Bearings Changed?	Yes:	No:

Comments: _____

_____

_____

_____

TP = Total Phosphorous TKN=Total Kjeldahl Nitrogen

USACE ACCIDENT INVESTIGATION REPORT

(For Safety Staff only)	REPORT NO.	EROC CODE	UNITED STATES ARMY CORPS OF ENGINEERS ACCIDENT INVESTIGATION REPORT (For Use of this Form See Attached Instructions and USACE Suppl to AR 385-40)	REQUIREMENT CONTROL SYMBOL: CEEC-S-8(R2)

1. ACCIDENT CLASSIFICATION

PERSONNEL CLASSIFICATION	INJURY/ILLNESS/FATAL	PROPERTY DAMAGE	MOTOR VEHICLE INVOLVED	DIVING
GOVERNMENT ☐ CIVILIAN ☐ MILITARY	☐	☐ FIRE INVOLVED ☐ OTHER	☐	☐
☐ CONTRACTOR	☐	☐ FIRE INVOLVED ☐ OTHER	☐	☐
☐ PUBLIC	☐ FATAL ☐ OTHER		☐	

2. PERSONAL DATA

a. NAME (Last,First,MI)	b. AGE	c. SEX	d. SOCIAL SECURITY NUMBER	e. GRADE
		☐ MALE ☐ FEMALE	___ ___ ___ / ___ ___ / ___ ___ ___ ___	

f. JOB SERIES/TITLE	g. DUTY STATUS AT TIME OF ACCIDENT	h. EMPLOYMENT STATUS AT TIME OF ACCIDENT
	☐ ON DUTY ☐ TDY ☐ OFF DUTY	☐ ARMY ACTIVE ☐ ARMY RESERVE ☐ VOLUNTEER ☐ PERMANENT ☐ FOREIGN NATIONAL ☐ SEASONAL ☐ TEMPORARY ☐ STUDENT ☐ OTHER (Specify)

3. GENERAL INFORMATION

a. DATE OF ACCIDENT (month/day/year)	b. TIME OF ACCIDENT (Military time))	c. EXACT LOCATION OF ACCIDENT	d. CONTRACTOR'S NAME
/ /			(1) PRIME:

e. CONTRACT NUMBER	f. TYPE OF CONTRACT	g. HAZARDOUS/TOXIC WASTE ACTIVITY	(2) SUBCONTRACTOR:
☐ CIVIL WORKS ☐ MILITARY ☐ OTHER (Specify)	☐ CONSTRUCTION. ☐ SERVICE ☐ A/E ☐ DREDGE ☐ OTHER (Specify)	☐ SUPERFUND ☐ DERP ☐ IRP ☐ OTHER (Specify)	

4. CONSTRUCTION ACTIVITIES ONLY *(Fill in line and corresponding code number in box from list - see instructions)*

a. CONSTRUCTION ACTIVITY	(CODE)	b. TYPE OF CONSTRUCTION EQUIPMENT	(CODE)
	#		#

5. INJURY / ILLNESS INFORMATION *(Include name on line and corresponding code number in box for items e, f & g - see instructions)*

a. SEVERITY OF ILLNESS / INJURY	(CODE)	b. ESTIMATED DAYS LOST	c. ESTIMATED DAYS HOSPITALIZED	d. ESTIMATED DAYS RESTRICTED DUTY
	#			

e. BODY PART AFFECTED	(CODE)	g. TYPE AND SOURCE OF INJURY/ILLNESS	(CODE)
PRIMARY	#	TYPE	#
SECONDARY	#	SOURCE	#
f. NATURE OF ILLNESS / INJURY	#		

6. PUBLIC FATALITY *(Fill in line and corresponding code number in box - see instructions)*

a. ACTIVITY AT TIME OF ACCIDENT	(CODE)	b. PERSONAL FLOATATION DEVICE USED?
	#	☐ YES ☐ NO ☐ N/A

7. MOTOR VEHICLE ACCIDENT

a. TYPE OF VEHICLE	b. TYPE OF COLLISION	c. SEAT BELTS	USED	NOT USED	NOT AVAILABLE
☐ PICKUP/VAN ☐ AUTOMOBILE ☐ TRUCK ☐ OTHER (Specify)	☐ SIDE SWIPE ☐ HEAD ON ☐ REAR END ☐ BROADSIDE ☐ ROLL OVER ☐ BACKING ☐ OTHER (Specify)	(1) FRONT SEAT			
		(2) REAR SEAT			

8. PROPERTY/MATERIAL INVOLVED

a. NAME OF ITEM	b. OWNERSHIP	c. $ AMOUNT OF DAMAGE
(1)		
(2)		
(3)		

9. VESSEL / FLOATING PLANT ACCIDENT *(Fill in line and corresponding code number in box from list - see instructions)*

a. TYPE OF VESSEL/FLOATING PLANT	(CODE)	b. TYPE OF COLLISON/MISHAP	(CODE)
	#		#

10. ACCIDENT DESCRIPTION *(Use additional paper, if necessary)*

11. CAUSAL FACTOR(S) *(Read Instruction Before Completing)*

a. *(Explain YES answers in item 13)*	YES	NO
DESIGN: Was design of facility,workplace or equipment a factor?	☐	☐
INSPECTION/MAINTENANCE: Were inspection & maintenance procedures a factor?	☐	☐
PERSON'S PHYSICAL CONDITION: In your opinion, was the physical condition of the person a factor?	☐	☐
OPERATING PROCEDURES: Were operating procedures a factor?	☐	☐
JOB PRACTICES: Were any job safety/health practices not followed when the accident occurred?	☐	☐
HUMAN FACTORS: Did any human factors such as, size or strength of person, etc.,contribute to accident?	☐	☐
ENVIRONMENTAL FACTORS: Did heat, cold, dust, sun, glare, etc., contribute to the accident?	☐	☐

a. *(CONTINUED)*	YES	NO
CHEMICAL AND PHYSICAL AGENT FACTORS: Did exposure to chemical agents, such as dust,fumes,mists,vapors or physical agents, such as, noise,radiation,etc.,contribute to accident?	☐	☐
OFFICE FACTORS: Did office setting such as, lifting office furniture,carrying,stooping,etc.,contribute to the accident?	☐	☐
SUPPORT FACTORS: Were inappropriate tools/resources provided to properly perform the activity/task?	☐	☐
PERSONAL PROTECTIVE EQUIPMENT: Did the improper selection, use or maintenance of personal protective equipment contribute to the accident?	☐	☐
DRUGS/ALCOHOL: In your opinion,was drugs or alcohol a factor to the accident?	☐	☐

b. WAS A WRITTEN JOB/ACTIVITY HAZARD ANALYSIS COMPLETED FOR TASK BEING PERFORMED AT TIME OF ACCIDENT?

☐ YES *(If yes, attach a copy.)* ☐ NO

12. TRAINING

a. WAS PERSON TRAINED TO PERFORM ACTIVITY/TASK?	b. TYPE OF TRAINING.	c. DATE OF MOST RECENT FORMAL TRAINING.
☐ YES ☐ NO	☐ CLASSROOM ☐ ON JOB	/ / *(Month) (Day) (Year)*

13. FULLY EXPLAIN WHAT ALLOWED OR CAUSED THE ACCIDENT; INCLUDE DIRECT AND INDIRECT CAUSES *(See instruction for definition of direct and indirect causes.) (Use additional paper, if necessary)*

a. DIRECT CAUSE

b. INDIRECT CAUSE(S)

14. ACTION(S) TAKEN, ANTICIPATED OR RECOMMENDED TO ELIMINATE CAUSE(S).

DESCRIBE FULLY:

15. DATES FOR ACTIONS IDENTIFIED IN BLOCK 14.

a. BEGINNING *(Month/Day/Year)* / / b. ANTICIPATED COMPLETION *(Month/Day/Year)* / /

c. SIGNATURE AND TITLE OF SUPERVISOR COMPLETING REPORT	d. DATE *(Mo/Da/Yr)*	e. ORGANIZATION IDENTIFIER *(Div, Br, Sect)*	f. OFFICE SYMBOL
CORPS _____	___ / ___ / ___		
CONTRACTOR _____	___ / ___ / ___		

16. MANAGEMENT REVIEW *(1st).*

a. ☐ CONCUR b. ☐ NON CONCUR c. COMMENTS

SIGNATURE	TITLE	DATE

17. MANAGEMENT REVIEW *(2nd - Chief Operations, Construction, Engineering, etc.)*

a. ☐ CONCUR b. ☐ NON CONCUR c. COMMENTS

SIGNATURE	TITLE	DATE

18. SAFETY AND OCCUPATIONAL HEALTH OFFICE REVIEW

a. ☐ CONCUR b. ☐ NON CONCUR c. ADDITIONAL ACTIONS/COMMENTS:

SIGNATURE	TITLE	DATE

19 COMMAND APPROVAL

COMMENTS

COMMANDER SIGNATURE	DATE

☆ U.S.G.P.O.: 1989- 626-113

GENERAL. Complete a separate report for each person who was *injured, caused,* or *contributed* to the accident (excluding uninjured personnel and witnesses). Use of this form for reporting USACE employee first-aid type injuries not submitted to the Office of Workers' Compensation Programs (OWCP) shall be at the descretion of the FOA commander. Please type or print legibly. Appropriate items shall be marked with an "X" in box(es). If additional space is needed, provide the information on a separate sheet and attach to the completed form. Ensure that these instructions are forwarded with the completed report to the designated management reviewers indicated in sections 16. and 17.

INSTRUCTIONS FOR SECTION 1— ACCIDENT CLASSIFICATION. *(Mark All Boxes That Are Applicable.)*

a. GOVERNMENT. Mark "CIVILIAN" box if accident involved government civilian employee; mark "MILITARY" box if accident involved U.S. military personnel.

(1) INJURY/ILLNESS/FATALITY—Mark if accident resulted in any government civilian employee injury, illness, or fatality that requires the submission of OWCP Forms CA-1 (injury), CA-2 (illness), or CA-6 (fatality) to OWCP; mark if accident resulted in military personnel lost-time or fatal injury or illness.

(2) PROPERTY DAMAGE—Mark the appropriate box if accident resulted in any damage of $1000 or more to government property (including motor vehicles).

(3) VEHICLE INVOLVED—Mark if accident involved a motor vehicle, *regardless* of whether "INJURY/ILLNESS/FATALITY" or "PROPERTY DAMAGE" are marked.

(4) DIVING ACTIVITY—Mark if the accident involved an in-house USACE diving activity.

b. CONTRACTOR.

(1) INJURY/ILLNESS/FATALITY—Mark if accident resulted in any contractor lost-time injury/illness or fatality.

(2) PROPERTY DAMAGE—Mark the appropriate box if accident resulted in any damage of $1000 or more to contractor property (including motor vehicles).

(3) VEHICLE INVOLVED—Mark if accident involved a motor vehicle, *regardless* of whether "INJURY/ILLNESS/FATALITY" or "PROPERTY DAMAGE" are marked.

(4) DIVING ACTIVITY—Mark if the accident involved a USACE Contractor diving activity.

c. PUBLIC.

(1) INJURY/ILLNESS/FATALITY—Mark if accident resulted in public fatality or permanent total disability. (The "OTHER" box will be marked when requested by the FOA to report an unusual non-fatal public accident that could result in claims against the government or as otherwise directed by the FOA Commander).

(2) VOID SPACE—Make no entry.

(3) VEHICLE INVOLVED—Mark if accident resulted in a fatality to a member of the public and involved a motor vehicle, *regardless* of whether "INJURY/ILLNESS/FATALITY" is marked.

(4) VOID SPACE—Make no entry.

INSTRUCTIONS FOR SECTION 2—PERSONAL DATA

a. NAME—(MANDATORY FOR GOVERNMENT ACCIDENTS. OPTIONAL AT THE DISCRETION OF THE FOA COMMANDER FOR CONTRACTOR AND PUBLIC ACCIDENTS). Enter last name, first name, middle initial of person involved.

b. AGE—Enter age.

c. SEX—Mark appropriate box.

d. SOCIAL SECURITY NUMBER—(FOR GOVERNMENT PERSONNEL ONLY) Enter the social security number (or other personal identification number if no social security number issued).

e. GRADE—(FOR GOVERNMENT PERSONNEL ONLY) Enter pay grade. Example: O-6; E-7; WG-8; WS-12; GS-11; etc.

f. JOB SERIES/TITLE—For *government civilian employees* enter the pay plan, full series number, and job title, e.g. GS-0810/Civil Engineer. For *military personnel* enter the primary military occupational specialty (PMOS), e.g., 15A30 or 11G50. For *contractor employees* enter the job title assigned to the injured person, e.g. carpenter, laborer, surveyor, etc.,

g. DUTY STATUS—Mark the appropriate box.

(1) ON DUTY—Person was at duty station during duty hours or person was away from duty station during duty hours but on official business at time of the accident.

(2) TDY - Person was on official business, away from the duty station and with travel orders at time of accident. Line-of-duty investigation required.

(3) OFF DUTY - Person was not on official business at time of accident

h. EMPLOYMENT STATUS—(FOR GOVERNMENT PERSONNEL ONLY) Mark the most appropriate box. If "OTHER" is marked, specify the employment status of the person.

INSTRUCTION FOR SECTION 3—GENERAL INFORMATION

a. DATE OF ACCIDENT—Enter the month, day, and year of accident.

b. TIME OF ACCIDENT—Enter the local time of accident in military time. Example: 1430 hrs (not 2:30 p.m.).

c. EXACT LOCATION OF ACCIDENT—Enter facts needed to locate the accident scene: (installation/project name, building number, street, direction and distance from closest landmark, etc.,).

d. CONTRACTOR NAME

(1) PRIME—Enter the exact name (title of firm) of the prime contractor.

(2) SUBCONTRACTOR—Enter the name of any subcontractor involved in the accident.

e. CONTRACT NUMBER—Mark the appropriate box to identify if contract is civil works, military, or other: If "OTHER" is marked, specify contract appropriation on line provided. Enter complete contract number of prime contract, e.g., DACW 09-85-C-0100.

f. TYPE OF CONTRACT—Mark appropriate box. A/E means architect/engineer. If "OTHER" is marked, specify type of contract on line provided.

g. HAZARDOUS/TOXIC WASTE ACTIVITY (HTW)—Mark the box to identify the HTW activity being performed at the time of the accident. For Superfund, DERP, and Installation Restoration Program (IRP) HTW activities include accidents that occurred during inventory, predesign, design, and construction. For the purpose of accident reporting, DERP Formerly Used DoD Site (FUDS) activities and IRP activities will be treated separately. For Civil Works O&M HTW activities mark the "OTHER" box.

INSTRUCTIONS FOR SECTION 4—CONSTRUCTION ACTIVITIES

a. CONSTRUCTION ACTIVITY—Select the *most appropriate* construction activity being performed at time of accident from the list below. Enter the activity name and place the corresponding code number identified in the box.

CONSTRUCTION ACTIVITY LIST

1. MOBILIZATION
2. SITE PREPARATION
3. EXCAVATION/TRENCHING
4. GRADING (EARTHWORK)
5. PIPING/UTILITIES
6. FOUNDATION
7. FORMING
8. CONCRETE PLACEMENT
9. STEEL ERECTION
10. ROOFING
11. FRAMING
12. MASONRY
13. CARPENTRY
14. ELECTRICAL
15. SCAFFOLDING/ACCESS
16. MECHANICAL
17. PAINTING
18. EQUIPMENT/MAINTENANCE
19. TUNNELING
20. WAREHOUSING/STORAGE
21. PAVING
22. FENCING
23. SIGNING
24. LANDSCAPING/IRRIGATION
25. INSULATION
26. DEMOLITION

b. TYPE OF CONSTRUCTION EQUIPMENT—Select the equipment involved in the accident from the list below. Enter the name and place the corresponding code number identified in the box. If equipment is not included below, use code 24, "OTHER", and write in specific type of equipment.

CONSTRUCTION EQUIPMENT

1. GRADER
2. DRAGLINE
3. CRANE (ON VESSEL/BARGE)
4. CRANE (TRACKED)
5. CRANE (RUBBER TIRE)
6. CRANE (VEHICLE MOUNTED)
7. CRANE (TOWER)
8. SHOVEL
9. SCRAPER
10. PUMP TRUCK (CONCRETE)
11. TRUCK (CONCRETE/TRANSIT MIXER)
12. DUMP TRUCK (HIGHWAY)
13. DUMP TRUCK (OFF HIGHWAY)
14. TRUCK (OTHER)
15. FORKLIFT
16. BACKHOE
17. FRONT-END LOADER
18. PILE DRIVER
19. TRACTOR (UTILITY)
20. MANLIFT
21. DOZER
22. DRILL RIG
23. COMPACTOR/VIBRATORY ROLLER
24. OTHER

INSTRUCTIONS FOR SECTION 5—INJURY/ILLNESS INFORMATION

a. SEVERITY OF INJURY / ILLNESS - Reference para 2-10 of USACE Suppl 1 to AR 385-40 and enter code and description from list below..

NOI NO INJURY
FAT FATALITY
PTL PERMANENT TOTAL DISABILITY
PPR PERMANENT PARTIAL DISABILITY
LWD LOST WORKDAY CASE INVOLVING DAYS AWAY FROM WORK
NLW RECORDABLE CASE WITHOUT LOST WORKDAYS
RFA RECORDABLE FIRST AID CASE
NRI NON-RECORDABLE INJURY

b. ESTIMATED DAYS LOST—Enter the estimated number of workdays the person will lose from work.

c. ESTIMATED DAYS HOSPITALIZED—Enter the estimated number of workdays the person will be hospitalized.

d. ESTIMATED DAYS RESTRICTED DUTY—Enter the estimated number of workdays the person, as a result of the accident, will not be able to perform all of their regular duties.

e. BODY PART AFFECTED—Select the most appropriate primary and when applicable, secondary body part affected from the list below. Enter body part name on line and place the corresponding code letters identifying that body part in the box.

GENERAL BODY AREA	CODE	BODY PART NAME
ARM/WRIST	AB	ARM AND WRIST
	AS	ARM OR WRIST
TRUNK, EXTERNAL MUSCULATURE	B1	SINGLE BREAST
	B2	BOTH BREASTS
	B3	SINGLE TESTICLE
	B4	BOTH TESTICLES
	BA	ABDOMEN
	BC	CHEST
	BL	LOWER BACK
	BP	PENIS
	BS	SIDE
	BU	UPPER BACK
	BW	WAIST
	BZ	TRUNK OTHER
HEAD, INTERNAL	C1	SINGLE EAR INTERNAL
	C2	BOTH EARS INTERNAL
	C3	SINGLE EYE INTERNAL
	C4	BOTH EYES INTERNAL
	CB	BRAIN
	CC	CRANIAL BONES
	CD	TEETH
	CJ	JAW
	CL	THROAT, LARYNX
	CM	MOUTH
	CN	NOSE
	CR	THROAT, OTHER
	CT	TONGUE
	CZ	HEAD OTHER INTERNAL
ELBOW	EB	BOTH ELBOWS
	ES	SINGLE ELBOW
FINGER	F1	FIRST FINGER
	F2	BOTH FIRST FINGERS
	F3	SECOND FINGER
	F4	BOTH SECOND FINGERS
	F5	THIRD FINGER
	F6	BOTH THIRD FINGERS
	F7	FOURTH FINGER
	F8	BOTH FOURTH FINGERS
TOE	G1	GREAT TOE
	G2	BOTH GREAT TOES
	G3	TOE OTHER
	G4	TOES OTHER
HEAD, EXTERNAL	H1	EYE EXTERNAL
	H2	BOTH EYES EXTERNAL
	H3	EAR EXTERNAL
	H4	BOTH EARS EXTERNAL
	HC	CHIN
	HF	FACE
	HK	NECK/THROAT
	HM	MOUTH/LIPS
	HN	NOSE
	HS	SCALP
KNEE	KB	BOTH KNEES
	KS	KNEE
LEG, HIP, ANKLE, BUTTOCK	LB	BOTH LEGS/HIPS/ ANKLES/BUTTOCKS
	LS	SINGLE LEG/HIP ANKLE/BUTTOCK
HAND	MB	BOTH HANDS
	MS	SINGLE HAND
FOOT	PB	BOTH FEET
	PS	SINGLE FOOT
TRUNK, BONES	R1	SINGLE COLLAR BONE
	R2	BOTH COLLAR BONES
	R3	SHOULDER BLADE
	R4	BOTH SHOULDER BLADES
	RB	RIB
	RS	STERNUM (BREAST BONE)
	RV	VERTEBRAE (SPINE; DISC)
	RZ	TRUNK BONES OTHER
SHOULDER	SB	BOTH SHOULDERS
	SS	SINGLE SHOULDER
THUMB	TB	BOTH THUMBS
	TS	SINGLE THUMB
TRUNK, INTERNAL ORGANS	V1	LUNG, SINGLE
	V2	LUNGS, BOTH
	V3	KIDNEY, SINGLE
	V4	KIDNEYS, BOTH
	VH	HEART
	VL	LIVER
	VR	REPRODUCTIVE ORGANS
	VS	STOMACH
	VV	INTESTINES
	VZ	TRUNK, INTERNAL; OTHER

f. NATURE OF INJURY/ILLNESS - Select the most appropriate nature of injury / illness from the list below. This nature of injury / illness shall correspond to the primary body part selected in 5e, above. Enter the nature of injury / illness name on the line and place the corresponding CODE letters in the box provided.

* The injury or condition selected below must be caused by a specific incident or event which occurred during a single work day or shift.

GENERAL NATURE CATEGORY	CODE	NATURE OF INJURY NAME
*TRAUMATIC INJURY OR DISABILITY	TA	AMPUTATION
	TB	BACK STRAIN.
	TC	CONTUSION; BRUISE; ABRASION
	TD	DISLOCATION
	TF	FRACTURE
	TH	HERNIA
	TK	CONCUSSION
	TL	LACERATION, CUT
	TP	PUNCTURE
	TS	STRAIN, MULTIPLE
	TU	BURN, SCALD, SUNBURN
	TI	TRAUMATIC SKIN DISEASES/ CONDITIONS INCLUDING DERMATITIS
	TR	TRAUMATIC RESPIRATORY DISEASE
	TQ	TRAUMATIC FOOD POISONING
	TW	TRAUMATIC TUBERCULOSIS
	TX	TRAUMATIC VIROLOGICAL/ INFECTIVE/PARASITIC DISEASE
	T1	TRAUMATIC CEREBRAL VASCULAR CONDITION/STROKE
	T2	TRAUMATIC HEARING LOSS
	T3	TRAUMATIC HEART CONDITION
	T4	TRAUMATIC MENTAL DISORDER; STRESS; NERVOUS CONDITION
	T8	TRAUMATIC INJURY — OTHER (EXCEPT DISEASE, ILLNESS)

**A nontraumatic physiological harm or loss of capacity produced by systemic infection; continued or repeated stress or strain; exposure to toxins, poisons, fumes, etc.; or other continued and repeated exposures to conditions of the work environment over a long period of time. For practical purposes, an occupational illness/disease or disability is any reported condition which doses not meet the definition of traumatic injury or disability as described above.

GENERAL NATURE CATEGORY	CODE	NATURE OF INJURY NAME
**NON-TRAUMATIC ILLNESS/DISEASE OR DISABILITY		
RESPIRATORY DISEASE	RA	ASBESTOSIS
	RB	BRONCHITIS
	RE	EMPHYSEMA
	RP	PNEUMOCONIOSIS
	RS	SILICOSIS
	R9	RESPIRATORY DISEASE, OTHER
VIROLOGICAL, INFECTIVE & PARASITIC DISEASES	VB	BRUCELLOSIS
	VC	COCCIDIOMYCOSIS
	VF	FOOD POISONING
	VH	HEPATITIS
	VM	MALARIA
	VS	STAPHYLOCOCCUS
	VT	TUBERCULOSIS
	V9	VIROLOGICAL/INFECTIVE/ PARASITIC — OTHER
DISABILITY, OCCUPATIONAL	DA	ARTHRITIS, BURSITIS
	DB	BACK STRAIN, BACK SPRAIN
	DC	CEREBRAL VASCULAR CONDITION; STROKE
	DD	ENDEMIC DISEASE (OTHER THAN CODE TYPES R&S)
	DE	EFFECT OF ENVIRONMENTAL CONDITION
	DH	HEARING LOSS
	DK	HEART CONDITION
	DM	MENTAL DISORDER, EMOTIONAL STRESS NERVOUS CONDITION
	DR	RADIATION
	DS	STRAIN, MULTIPLE
	DU	ULCER
	DV	OTHER VASCULAR CONDITIONS
	D9	DISABILITY, OTHER
SKIN DISEASE OR CONDITION	S8	BIOLOGICAL
	SC	CHEMICAL
	S9	DERMATITIS, UNCLASSIFIED

g. TYPE AND SOURCE OF INJURY/ILLNESS (CAUSE) - Type and Source Codes are used to describe what caused the incident. The Type Code stands for an ACTION and the Source Code for an OBJECT or SUBSTANCE. Together, they form a brief description of how the incident occurred. Where there are two different sources, code the initiating source of the incident (see example 1, below). Examples:

(1) An employee tripped on carpet and struck his head on a desk.
TYPE: 210 (fell on same level) SOURCE: 0110 (walking/working surface)

NOTE: This example would NOT be coded 120 (struck against) and 0140 (furniture).

(2) A Park Ranger contracted dermatitis from contact with poison ivy/ oak.
TYPE: 510 (contact) SOURCE: 0920 (plant)

(3) A lock and dam mechanic punctured his finger with a metal sliver while grinding a turbine blade.
TYPE: 410 (punctured by) SOURCE: 0830 (metal)

(4) An employee was driving a government vehicle when it was struck by another vehicle..
TYPE: 800 (traveling in) SOURCE: 0421 (government-owned vehicle, as driver)

NOTE: The Type Code 800, "Traveling In" is different from the other type codes in that its function is not to identify factors contributing to the injury or fatality, but rather to collect data on the type of vehicle the employee was operating or traveling in at the time of the incident.

Select the most appropriate TYPE and SOURCE identifier from the list below and enter the name on the line and the corresponding code in the appropriate box.

CODE	TYPE OF INJURY NAME
	STRUCK
0110	STRUCK BY
0111	STRUCK BY FALLING OBJECT
0120	STRUCK AGAINST
	FELL, SLIPPED, TRIPPED
0210	FELL ON SAME LEVEL
0220	FELL ON DIFFERENT LEVEL
0230	SLIPPED, TRIPPED (NO FALL)
	CAUGHT
0310	CAUGHT ON
0320	CAUGHT IN
0330	CAUGHT BETWEEN
	PUNCTURED, LACERATED
0410	PUNCTURED BY
0420	CUT BY
0430	STUNG BY
0440	BITTEN BY
	CONTACTED
0510	CONTACTED WITH (INJURED PERSON MOVING)
0520	CONTACTED BY (OBJECT WAS MOVING)
	EXERTED
0610	LIFTED, STRAINED BY (SINGLE ACTION)
0620	STRESSED BY (REPEATED ACTION)
	EXPOSED
0710	INHALED
0720	INGESTED
0730	ABSORBED
0740	EXPOSED TO
0800	TRAVELING IN

CODE	SOURCE OF INJURY NAME
0100	BUILDING OR WORKING AREA
0110	WALKING/WORKING SURFACE (FLOOR, STREET, SIDEWALKS, ETC)
0120	STAIRS, STEPS
0130	LADDER
0140	FURNITURE, FURNISHINGS, OFFICE EQUIPMENT
0150	BOILER, PRESSURE VESSEL
0160	EQUIPMENT LAYOUT (ERGONOMIC)
0170	WINDOWS, DOORS
0180	ELECTRICITY

* U.S. GOVERNMENT PRINTING OFFICE 1993–758-900

CODE	SOURCE OF INJURY NAME
0200	ENVIRONMENTAL CONDITION
0210	TEMPERATURE EXTREME (INDOOR)
0220	WEATHER (ICE, RAIN, HEAT, ETC.)
0230	FIRE, FLAME, SMOKE (NOT TOBACCO)
0240	NOISE
0250	RADIATION
0260	LIGHT
0270	VENTILATION
0271	TOBACCO SMOKE
0280	STRESS (EMOTIONAL)
0290	CONFINED SPACE
0300	MACHINE OR TOOL
0310	HAND TOOL (POWERED: SAW, GRINDER, ETC.)
0320	HAND TOOL (NONPOWERED)
0330	MECHANICAL POWER TRANSMISSION APPARATUS
0340	GUARD, SHIELD (FIXED, MOVEABLE, INTERLOCK)
0350	VIDEO DISPLAY TERMINAL
0360	PUMP, COMPRESSOR, AIR PRESSURE TOOL
0370	HEATING EQUIPMENT
0380	WELDING EQUIPMENT
0400	VEHICLE
0411	AS DRIVER OF PRIVATELY OWNED/RENTAL VEHICLE
0412	AS PASSENGER OF PRIVATELY OWNED/RENTAL VEHICLE
0421	DRIVER OF GOVERNMENT VEHICLE
0422	PASSENGER OF GOVERNMENT VEHICLE
0430	COMMON CARRIER (AIRLINE, BUS, ETC.)
0440	AIRCRAFT (NOT COMMERCIAL)
0450	BOAT, SHIP, BARGE
0500	MATERIAL HANDLING EQUIPMENT
0510	EARTHMOVER (TRACTOR, BACKHOE, ETC.)
0520	CONVEYOR (FOR MATERIAL AND EQUIPMENT)
0530	ELEVATOR, ESCALATOR, PERSONNEL HOIST
0540	HOIST, SLING CHAIN, JACK
0550	CRANE
0551	FORKLIFT
0560	HANDTRUCK, DOLLY
0600	DUST, VAPOR, ETC.
0610	DUST (SILICA, COAL, ETC.)
0620	FIBERS
0621	ASBESTOS
0630	GASES
0631	CARBON MONOXIDE
0640	MIST, STEAM, VAPOR, FUME
0641	WELDING FUMES
0650	PARTICLES (UNIDENTIFIED)
0700	CHEMICAL, PLASTIC, ETC.
0711	DRY CHEMICAL—CORROSIVE
0712	DRY CHEMICAL—TOXIC
0713	DRY CHEMICAL—EXPLOSIVE
0714	DRY CHEMICAL—FLAMMABLE
0721	LIQUID CHEMICAL—CORROSIVE
0722	LIQUID CHEMICAL—TOXIC
0723	LIQUID CHEMICAL—EXPLOSIVE
0724	LIQUID CHEMICAL—FLAMMABLE
0730	PLASTIC
0740	WATER
0750	MEDICINE
0800	INANIMATE OBJECT
0810	BOX, BARREL, ETC.
0820	PAPER
0830	METAL ITEM, MINERAL
0831	NEEDLE
0840	GLASS
0850	SCRAP, TRASH
0860	WOOD
0870	FOOD
0880	CLOTHING, APPAREL, SHOES
0900	ANIMATE OBJECT
0911	DOG
0912	OTHER ANIMAL
0920	PLANT
0930	INSECT
0940	HUMAN (VIOLENCE)
0950	HUMAN (COMMUNICABLE DISEASE)
0960	BACTERIA, VIRUS (NOT HUMAN CONTACT)

CODE	SOURCE OF INJURY NAME
1000	PERSONAL PROTECTIVE EQUIPMENT
1010	PROTECTIVE CLOTHING, SHOES, GLASSES, GOGGLES
1020	RESPIRATOR, MASK
1021	DIVING EQUIPMENT
1030	SAFETY BELT, HARNESS
1040	PARACHUTE

INSTRUCTIONS FOR SECTION 6 — PUBLIC FATALITY

a. ACTIVITY AT TIME OF ACCIDENT—Select the activity being performed at the time of the accident from the list below. Enter the activity name on the line and the corresponding number in the box. If the activity performed is not identified on the list, select from the *most* appropriate primary activity area (water related, non-water related or other activity), the code number for "Other", and write in the activity being performed at the time of the accident.

WATER RELATED RECREATION

1. Sailing
2. Boating—powered
3. Boating—unpowered
4. Water skiing
5. Fishing from boat
6. Fishing from bank dock or pier
7. Fishing while wading
8. Swimming/supervised area
9. Swimming/designated area
10. Swimming/other area
11. Underwater activities (skin diving, scuba, etc.)
12. Wading
13. Attempted rescue
14. Hunting from boat
15. Other

NON-WATER RELATED RECREATION

16. Hiking and walking
17. Climbing (general)
18. Camping/picnicking authorized area
19. Camping/picnicking unauthorized area
20. Guided tours
21. Hunting
22. Playground equipment
23. Sports/summer (baseball, football, etc.)
24. Sports/winter (skiing, sledding, snowmobiling etc.)
25. Cycling (bicycle, motorcycle, scooter)
26. Gliding
27. Parachuting
28. Other non-water related

OTHER ACTIVITIES

29. Unlawful acts (fights, riots, vandalism, etc.)
30. Food preparation/serving
31. Food consumption
32. Housekeeping
33. Sleeping
34. Pedestrian struck by vehicle
35. Pedestrian other acts
36. Suicide
37. "Other" activities

b. PERSONAL FLOTATION DEVICE USED—If fatality was water-related was the victim wearing a person flotation device? Mark the appropriate box.

INSTRUCTIONS FOR SECTION 7—MOTOR VEHICLE ACCIDENT

a. TYPE OF VEHICLE—Mark appropriate box for each vehicle involved. If more than one vehicle of the same type is involved, mark both halves of the appropriate box. USACE vehicle(s) involved shall be marked in left half of appropriate box.

b. TYPE OF COLLISION—Mark appropriate box.

c. SEAT BELT—Mark appropriate box.

INSTRUCTIONS FOR SECTION 8—PROPERTY/ MATERIAL INVOLVED

a. NAME OF ITEM—Describe all property involved in accident. Property/material involved means material which is damaged or whose use or misuse contributed to the accident. Include the name, type, model; also include the National Stock Number (NSN) whenever applicable.

b. OWNERSHIP—Enter ownership for each item listed. (Enter one of the following: *USACE; OTHER GOVERNMENT; CONTRACTOR; PRIVATE)*

c. $ AMOUNT OF DAMAGE—Enter the total estimated dollar amount of damage (parts and labor), if any.

INSTRUCTIONS FOR SECTION 9—VESSEL/ FLOATING PLANT ACCIDENT

a. TYPE OF VESSEL/FLOATING PLANT—Select the most appropriate vessel/floating plant from list below. Enter name and place corresponding number in box. If item is not listed below, enter item number for "OTHER" and write in specific type of vessel/ floating plant.

VESSEL/FLOATING PLANTS

1. ROW BOAT
2. SAIL BOAT
3. MOTOR BOAT
4. BARGE
5. DREDGE/HOPPER
6. DREDGE/SIDE CASTING
7. DREDGE/DIPPER
8. DREDGE/CLAMSHELL BUCKET
9. DREDGE/PIPE LINE
10. DREDGE/DUST PAN
11. TUG BOAT
12. OTHER

b. COLLISION/MISHAP—Select from the list below the object(s) that contributed to the accident or were damaged in the accident.

COLLISION/MISHAP

1. COLLISION W/OTHER VESSEL
2. UPPER GUIDE WALL
3. UPPER LOCK GATES
4. LOCK WALL
5. LOWER LOCK GATES
6. LOWER GUIDE WALL
7. HAULAGE UNIT
8. BREAKING TOW
9. TOW BREAKING UP
10. SWEPT DOWN ON DAM
11. BUOY/DOLPHIN/CELL
12. WHARF OR DOCK
13. OTHER

INSTRUCTIONS FOR SECTION 10—ACCIDENT DESCRIPTION

DESCRIBE ACCIDENT—Fully describe the accident. Give the sequence of events that describe what happened leading up to and including the accident. Fully identify personnel and equipment involved and their role(s) in the accident. Ensure that relationships between personnel and equipment are clearly specified. Continue on blank sheets if necessary and attach to this report.

INSTRUCTIONS FOR SECTION 11—CAUSAL FACTORS

a. Review thoroughly. Answer each question by marking the appropriate block. If any answer is yes, explain in item 13 below. Consider, as a minimum, the following:

(1) DESIGN—Did inadequacies associated with the building or work site play a role? Would an improved design or layout of the equipment or facilities reduce the likelihood of similar accidents? Were the tools or other equipment designed and intended for the task at hand?

(2) INSPECTION/MAINTENANCE—Did inadequately or improperly maintained equipment, tools, workplace, etc. create or worsen any hazards that contributed to the accident? Would better equipment, facility, work site or work activity inspections have helped avoid the accident?

(3) PERSON'S PHYSICAL CONDITION—Do you feel that the accident would probably not have occurred if the employee was in "good" physical condition? If the person involved in the accident had been in better physical condition, would the accident have been less severe or avoided altogether? Was over exertion a factor?

(4) OPERATING PROCEDURES—Did a lack of or inadequacy within established operating procedures contribute to the accident? Did any aspect of the procedures introduce any hazard to, or increase the risk associated with the work process? Would establishment or improvement of operating procedures reduce the likelihood of similar accidents?

(5) JOB PRACTICES—Were any of the provisions of the Safety and Health Requirements Manual (EM 385-1-1) violated? Was the task being accomplished in a manner which was not in compliance with an established job hazard analysis or activity hazard analysis? Did any established job practice (including EM 385-1-1) fail to adequately address the task or work process? Would better job practices improve the safety of the task?

(6) HUMAN FACTORS—Was the person under undue stress (either internal or external to the job)? Did the task tend toward overloading the capabilities of the person; i.e., did the job require tracking and reacting to many external inputs such as displays, alarms, or signals? Did the arrangement of the workplace tend to interfere with efficient task performance? Did the task require reach, strength, endurance, agility, etc., at or beyond the capabilities of the employee? Was the work environment ill-adapted to the person? Did the person need more training, experience, or practice in doing the task? Was the person inadequately rested to perform safely?

(7) ENVIRONMENTAL FACTORS—Did any factors such as moisture, humidity, rain, snow, sleet, hail, ice, fog, cold, heat, sun, temperature changes, wind, tides, floods, currents, dust, mud, glare, pressure changes, lightning, etc., play a part in the accident?

(8) CHEMICAL AND PHYSICAL AGENT FACTORS—Did exposure to chemical agents (either single shift exposure or long-term exposure) such as dusts, fibers (asbestos, etc.), silica, gases (carbon monoxide, chlorine, etc.,), mists, steam, vapors, fumes, smoke, other particulates, liquid or dry chemicals that are corrosive, toxic, explosive or flammable, by-products of combustion or physical agents such as noise, ionizing radiation, non-ionizing radiation (UV radiation created during welding, etc.) contribute to the accident/incident?

(9) OFFICE FACTORS—Did the fact that the accident occurred in an office setting or to an office worker have a bearing on its cause? For example, office workers tend to have less experience and training in performing tasks such as lifting office furniture. Did physical hazards within the office environment contribute to the hazard?

(10) SUPPORT FACTORS—Was the person using an improper tool for the job? Was inadequate time available or utilized to safely accomplish the task? Were less than adequate personnel resources (in terms of employee skills, number of workers, and adequate supervision) available to get the job done properly? Was funding available, utilized, and adequate to provide proper tools, equipment, personnel, site preparation, etc?

(11) PERSONAL PROTECTIVE EQUIPMENT—Did the person fail to use appropriate personal protective equipment (gloves, eye protection, hard-toed shoes, respirator, etc.) for the task or environment? Did protective equipment provided or worn fail to provide adequate protection from the hazard(s)? Did lack of or inadequate maintenance of protective gear contribute to the accident?

(12) DRUGS/ALCOHOL—Is there any reason to believe the person's mental or physical capabilities, judgement, etc., were impaired or altered by the use of drugs or alcohol? Consider the effects of prescription medicine and over the counter medications as well as illicit drug use. Consider the effect of drug or alcohol induced "hangovers".

b. WRITTEN JOB/ACTIVITY HAZARD ANALYSIS—Was a written Job/Activity Hazard Analysis completed for the task being performed at the time of the accident? Mark the appropriate box. *If one was performed, attach a copy of the analysis to the report.*

INSTRUCTIONS FOR SECTION 12—TRAINING

a. WAS PERSON TRAINED TO PERFORM ACTIVITY/TASK?—For the purpose of this section "trained" means the person has been provided the necessary information (either formal and/or on-the-job (OJT) training) to competently perform the activity/task in a safe and healthful manner.

b. TYPE OF TRAINING—Mark the appropriate box that best indicates the type of training: (classroom or on-the-job) that the injured person received before the accident happened.

c. DATE OF MOST RECENT TRAINING—Enter the month, day, and year of the last *formal* training completed that covered the activity-task being performed at the time of the accident.

INSTRUCTIONS FOR SECTION 13—CAUSES

a. DIRECT CAUSES—The direct cause is that single factor which most directly lead to the accident. See examples below.

b. INDIRECT CAUSES—Indirect causes are those factors which contributed to but did not directly initiate the occurrence of the accident.

Examples for section 13:

a. Employee was dismantling scaffold and fell 12 feet from unguarded opening.
Direct cause: failure to provide fall protection at elevation.
Indirect causes: failure to enforce USACE safety requirements; improper training/motivation of employee (possibility that employee was not knowledgeable of USACE fall protection requirements or was lax in his attitude towards safety); failure to ensure provision of positive fall protection whenever elevated; failure to address fall protection during scaffold dismantling in phase hazard analysis.

b. Private citizen had stopped his vehicle at intersection for red light when vehicle was struck in rear by USACE vehicle. (note USACE vehicle was in proper/safe working condition).
Direct cause: failure of USACE driver to maintain control of and stop USACE vehicle within safe distance.
Indirect cause: Failure of employee to pay attention to driving (defensive driving).

INSTRUCTIONS FOR SECTION 14—ACTION TO ELIMINATE CAUSE(S)

DESCRIPTION—Fully describe all the actions taken, anticipated, and recommended to eliminate the cause(s) and prevent reoccurrence of similar accidents/illnesses. Continue on blank sheets of paper if necessary to fully explain and attach to the completed report form.

INSTRUCTIONS FOR SECTION 15—DATES FOR ACTION

a. BEGIN DATE—Enter the date when the corrective action(s) identified in Section 14 will begin.

b. COMPLETE DATE—Enter the date when the corrective action(s) identified in Section 14 will be completed.

c. TITLE AND SIGNATURE—Enter the title and signature of supervisor completing the accident report. For a GOVERNMENT employee accident/illness the immediate supervisor will complete and sign the report. For PUBLIC accidents the USACE Project Manager/Area Engineer responsible for the USACE property where the accident happened shall complete and sign the report. For CONTRACTOR accidents the Contractor's project manager shall complete and sign the report and provide to the USACE supervisor responsible for oversight of that contractor activity. This USACE Supervisor shall also sign the report. Upon entering the information required in 15.d, 15.e and 15.f below, the responsible USACE supervisor shall forward the report for management review as indicated in Section 16.

d. DATE SIGNED—Enter the month, day, and year that the report was signed by the responsible supervisor.

e. ORGANIZATION NAME—For GOVERNMENT employee accidents enter the USACE organization name (Division, Branch, Section, etc.) of the injured employee. For PUBLIC accidents enter the USACE organization name for the person identified in block 15.c. For CONTRACTOR accidents enter the USACE organization name for the USACE office responsible for providing contract administration oversight.

f. OFFICE SYMBOL—Enter the latest complete USACE Office Symbol for the USACE organization identified in block 15.e.

INSTRUCTIONS FOR SECTION 16—MANAGEMENT REVIEW (1st)

1ST REVIEW—Each USACE FOA shall determine who will provide 1st management review. The responsible USACE supervisor in section 15.c shall forward the completed report to the USACE office designated as the 1st Reviewer by the FOA. Upon receipt, the Chief of the Office shall review the completed report, mark the appropriate box, provide substantive comments, sign, date, and forward to the FOA Staff Chief (2nd review) for review and comment.

INSTRUCTIONS FOR SECTION 17—MANAGEMENT REVIEW (2nd)

2ND REVIEW—The FOA Staff Chief (i.e., FOA Chief of Construction, Operations, Engineering, Planning, etc.) shall mark the appropriate box, review the completed report, provide substantive comments, sign, date, and return to the FOA Safety and Occupational Health Office.

INSTRUCTIONS FOR SECTION 18—SAFETY AND OCCUPATIONAL HEALTH REVIEW

3RD REVIEW—The FOA Safety and Occupational Health Office shall review the completed report, mark the appropriate box, ensure that any inadequacies, discrepancies, etc, are rectified by the responsible supervisor and management reviewers, provide substantive comments, sign, date and forward to the FOA Commander for review, comment, and signature.

INSTRUCTION FOR SECTION 19—COMMAND APPROVAL

4TH REVIEW—The FOA Commander shall (to include the person designated Acting Commander in his absence) review the completed report, comment if required, sign, date, and forward the report to the FOA Safety and Occupational Health Office. Signature authority shall not be delegated.

CHAIN-OF-CUSTUDY RECORD

Foste Wheeler
Environmental Corporation

Chain-of-Custody Record

Project No.:	Project Name:	Sample Date:

Chain-of-Custody No.:	Samplers:

Site Type	Site Identification	Time (Military Standard)	Sample Depth (feet)	Preservative: HNO_3	H_2SO_4	NaOH	ZnAcetate/NaOH	Sampling Method	No. of Containers	Analysis Required: BTEX	TRPH	VOCs	Ammonia N	NO_2+NO_3	TKN	Phosphorous	Iron	TPH Jet Fuel	TPH Gas	TPH Diesel	TNMOC									Sample Tag Number

Relinquished by: *(Signature)*	Date/Time	Received by: *(Signature)*	Date/Time
Relinquished by: *(Signature)*	Date/Time	Received by: *(Signature)*	Date/Time
Relinquished by: *(Signature)*	Date/Time	Received by: *(Signature)*	Date/Time

Remarks:
LIMS # : 4327
FEDERAL EXPRESS # :

MATRIX :
LABCODE :
LOGCODE :

LABORATORY USE ONLY	Y	N
Package Received / Custody Seals Intact		
Sample Labels / COCs Agree		
Temperature within Specification _____C°		
Corrected Copy Attached		
Problems or Discrepancies		

HOLLOMAN LTM/LTO SAMPLE TEMPLATE

HOLLOMAN LTM/LTO SAMPLE TEMPLATE

AFIID HOLMN

LOCID _____

LTCCODE _____

ECOORD _____

NCOORD _____

ELEV _____

DEPTH _____

(use top of depth interval, and round to whole number)

APPENDIX C

LABORATORY PRECISION AND ACCURACY DATA

Method**		MDL*	Reporting Limit*	
	Dibromochloromethane	0.3	3	ug/L
	Chlorobenzene	0.4	3	
	Ethylbenzene	0.5	3	
	Bromoform	0.4	3	
	1,1,2,2-Tetrachloroethane	0.5	3	
	Acrolein	3	3	
	Acetone	2	5	
	Acrylonitrile	2	3	
	Vinyl acetate	0.5	3	
	2-Butanone	0.7	5	
	4-Methyl-2-pentanone	2	5	
	2-Hexanone	2	5	
	m,p-Xylenes	0.4	3	
	o-Xylene	0.4	3	
	Styrene	0.4	3	
	Carbon disulfide	0.4	3	
	Dichlorodifluoromethane	0.6	3	
8260A	**Volatile Organics by GC/MS**			
	Dichlorodifluoromethane	0.2	0.5	ug/L
	Chloromethane	0.2	0.5	
	Vinyl chloride	0.2	0.5	
	Bromomethane	0.1	0.5	
	Chloroethane	0.1	0.5	
	Trichlorofluoromethane	0.2	0.5	
	1,1-Dichloroethene	0.2	0.5	
	Methylene chloride	0.2	0.5	
	trans-1,2-Dichloroethene	0.2	0.5	
	1,1-Dichloroethane	0.2	0.5	
	2,2-Dichloropropane	0.2	0.5	
	cis-1,2-Dichloroethene	0.1	0.5	
	Bromochloromethane	0.1	0.5	

*Detection and reporting limits for solid samples are calculated based on the assumption of 100% total solids. Actual values will be adjusted upwards by the percent total solids. Limits for all samples will also be adjusted for any dilutions or matrix interferences.

**The method lists provided represent the entire target analyte list for which Laucks currently has MDL studies. The reported project specific target analytes may vary from this list.

Method**	MDL*	Reporting Limit*	
Chloroform	0.2	0.5	ug/L
1,1,1-Trichloroethane	0.1	0.5	
Carbon tetrachloride	0.1	0.5	
1,1-Dichloropropene	0.1	0.5	
Benzene	0.1	0.5	
1,2-Dichloroethane	0.1	0.5	
Trichloroethene	0.1	0.5	
1,2-Dichloropropane	0.1	0.5	
Dibromomethane	0.1	0.5	
Bromodichloromethane	0.1	0.5	
cis-1,3-Dichloropropene	0.2	0.5	
Toluene	0.2	0.5	
trans-1,3-Dichloropropene	0.2	0.5	
1,1,2-Trichloroethane	0.1	0.5	
Tetrachloroethene	0.2	0.5	
1,3-Dichloropropane	0.2	0.5	
Chlorodibromomethane	0.2	0.5	
1,2-Dibromoethane	0.2	0.5	
Chlorobenzene	0.1	0.5	
1,1,1,2-Tetrachloroethane	0.2	0.5	
Ethylbenzene	0.1	0.5	
m,p-Xylenes	0.2	0.5	
o-Xylene	0.1	0.5	
Styrene	0.1	0.5	
Bromoform	0.1	0.5	
Isopropylbenzene	0.1	0.5	
Bromobenzene	0.1	0.5	
1,2,3-Trichloropropane	0.2	0.5	
1,1,2,2-Tetrachloroethane	0.1	0.5	
n-Propylbenzene	0.1	0.5	
2-Chlorotoluene	0.1	0.5	

*Detection and reporting limits for solid samples are calculated based on the assumption of 100% total solids. Actual values will be adjusted upwards by the percent total solids. Limits for all samples will also be adjusted for any dilutions or matrix interferences.

**The method lists provided represent the entire target analyte list for which Laucks currently has MDL studies. The reported project specific target analytes may vary from this list.

Method**		MDL*	Reporting Limit*	
	4-Chlorotoluene	0.1	0.5	ug/L
	1,3,5-Trimethylbenzene	0.1	0.5	
	tert-Butylbenzene	0.1	0.5	
	1,2,4-Trimethylbenzene	0.1	0.5	
	sec-Butylbenzene	0.1	0.5	
	1,3-Dichlorobenzene	0.1	0.5	
	1,4-Dichlorobenzene	0.1	0.5	
	Isopropyltoluene	0.1	0.5	
	1,2-Dichlorobenzene	0.1	0.5	
	n-Butylbenzene	0.1	0.5	
	1,2-Dibromo-3-chloropropane	0.2	0.5	
	1,2,4-Trichlorobenzene	0.2	0.5	
	Naphthalene	0.2	0.5	
	Hexachlorobutadiene	0.2	0.5	
	1,2,3-Trichlorobenzene	0.2	0.5	
	Acetone	1.7	1.7	
	2-Butanone	1.2	1.2	
	4-Methyl-2-pentanone	0.6	1	
	2-Hexanone	0.8	1	
	Carbon disulfide	0.2	0.5	
	Vinyl acetate	0.5	0.5	
	Iodomethane	0.2	0.5	
	trans-1,4-Dichloro-2-butene	1.5	5	
	Allyl chloride	0.2	0.5	
	Chloroprene	0.2	0.5	
	2-Chloroethyl vinyl ether	0.1	0.5	
8270A	**Semivolatile Organics by GC/MS**			
	Phenol	25	130	ug/kg DB
	Bis(2-chloroethyl)ether	27	140	
	2-Chlorophenol	22	110	
	1,3-Dichlorobenzene	14	70	

*Detection and reporting limits for solid samples are calculated based on the assumption of 100% total solids. Actual values will be adjusted upwards by the percent total solids. Limits for all samples will also be adjusted for any dilutions or matrix interferences.

**The method lists provided represent the entire target analyte list for which Laucks currently has MDL studies. The reported project specific target analytes may vary from this list.

Method**		MDL*	Reporting Limit*	
	trans-1,3-Dichloropropene	0.03	0.15	ug/L
	1,1,2-Trichloroethane	0.05	0.25	
	Tetrachloroethene	0.1	0.5	
	Dibromochloromethane	0.08	0.4	
	Chlorobenzene	0.1	0.5	
	1,1,1,2-Tetrachloroethane	0.07	0.35	
	Bromoform	0.08	0.4	
	Bromobenzene	0.35	1.7	
	1,1,2,2-Tetrachloroethane	0.19	0.95	
	1,2,3-Trichloropropane	0.22	1.1	
	1,3-Dichlorobenzene	0.08	0.4	
	1,4-Dichlorobenzene	0.06	0.3	
	Benzyl chloride	0.2	1	
	1,2-Dichlorobenzene	0.12	0.6	
8020A	**Aromatic Volatile Organics by GC**			
	Benzene	0.18	0.9	ug/kg DB
	Toluene	0.22	1.1	
	Chlorobenzene	0.16	0.8	
	Ethylbenzene	0.2	1	
	m,p-Xylenes	0.58	2.9	
	o-Xylene	0.24	1.2	
	1,3-Dichlorobenzene	0.24	1.2	
	1,4-Dichlorobenzene	0.24	1.2	
	1,2-Dichlorobenzene	0.36	1.8	
	Total xylenes	0.58	2.9	
	Benzene	0.09	0.45	ug/L
	Toluene	0.11	0.55	
	Chlorobenzene	0.08	0.4	
	Ethylbenzene	0.1	0.5	
	m,p-Xylenes	0.29	1.4	
	o-Xylene	0.12	0.6	

*Detection and reporting limits for solid samples are calculated based on the assumption of 100% total solids. Actual values will be adjusted upwards by the percent total solids. Limits for all samples will also be adjusted for any dilutions or matrix interferences.

**The method lists provided represent the entire target analyte list for which Laucks currently has MDL studies. The reported project specific target analytes may vary from this list.

Method**		MDL*	Reporting Limit*	
415.2	**Total Organic Carbon, UV, persulfate oxidation**			
	Total Organic Carbon	0.3	1	mg/L
418.1	**Total Recoverable Petroleum Hydrocarbons**			
	TPH-418.1	5	20	mg/kg DB
	TPH-418.1	0.2	0.5	mg/L
420.1	**Phenolics, total recoverable, automated 4AAP**			
	Phenolics, Total Recoverable	0.001	0.005	mg/L
425.1	**Methylene Blue Active Substances (MBAS)**			
	Methylene Blue Active Substances		0.02	mg/L
504	**EDB & DBCP by Microextraction and GC**			
	1,2-Dibromoethane	0.01	0.05	ug/L
	1,2-Dibromo-3-chloropropane	0.01	0.05	
508	**Chlorinated Pesticides by GC with ECD**			
	Hexachlorocyclopentadiene	0.001	0.005	ug/L
	Hexachlorobenzene	0.001	0.005	
	gamma-BHC (Lindane)	0.001	0.005	
	Heptachlor	0.001	0.005	
	Aldrin	0.001	0.005	
	Heptachlor Epoxide	0.001	0.005	
	Dieldrin	0.001	0.005	
	Endrin	0.001	0.005	
	4,4'-DDE	0.001	0.005	
	4,4'-DDD	0.001	0.005	
	4,4'-DDT	0.001	0.005	
	Methoxychlor	0.002	0.01	
	Alachlor	0.004	0.02	
	Atrazine	0.046	0.23	
	Simazine	0.123	0.62	

*Detection and reporting limits for solid samples are calculated based on the assumption of 100% total solids. Actual values will be adjusted upwards by the percent total solids. Limits for all samples will also be adjusted for any dilutions or matrix interferences.

**The method lists provided represent the entire target analyte list for which Laucks currently has MDL studies. The reported project specific target analytes may vary from this list.

Laucks Testing Laboratories, Inc. **Detection Limit Summary Report**

06-Dec-95

Method**		MDL*	Reporting Limit*	
340.2	**Fluoride, Ion Selective Electrode**			
	Fluoride in water		0.2	mg/L
350.1	**Ammonia, automated phenate**			
	Ammonia as N in water	0.005	0.01	mg/L
			0.01	mg/kg
351.1	**Total Kjeldahl Nitrogen, automated phenate**			
	Total Kjeldahl Nitrogen as N in water	0.2	0.2	mg/L
			0.2	mg/kg
353.2	**Nitrate/Nitrite, automated cadmium reduction**			
	Nitrate/Nitrite in water	0.01	0.01	mg/L
			0.01	mg/kg
354.1	**Nitrite, spectrophotometric**			
	Nitrites in water	0.002	0.005	mg/L
365.2	**Total Phosphorus**			
	Phosphorus in water	0.01	0.01	mg/L
	in soil	0.25	0.5	mg/kg
376.1	**Sulfide**			
	Sulfide in water		0.2	mg/L
376.2	**Sulfide**			
	Sulfide in water	0.04	0.04	mg/L
405.1	**Biochemical Oxygen Demand (BOD)**			
	Biochemical Oxygen Demand in water		5	mg/L
410.4	**Chemical Oxygen Demand, manual colorimetric**			
	Chemical Oxygen Demand in water		10	mg/L
413.1	**Total Recoverable Oil & Grease, gravimetric**			
	Oil and Grease in water		5	mg/L
413.2	**Total Recoverable Oil & Grease, infrared**			
	Oil and Grease in soil/sediment		20	mg/kg DB
	Oil and Grease in water	0.8	1	mg/L

*Detection and reporting limits for solid samples are calculated based on the assumption of 100% total solids. Actual values will be adjusted upwards by the percent total solids. Limits for all samples will also be adjusted for any dilutions or matrix interferences.

**The method lists provided represent the entire target analyte list for which Laucks currently has MDL studies. The reported project specific target analytes may vary from this list.

OAR 12-6-95

Laucks Testing Laboratories, Inc. **Detection Limit Summary Report**

10-Nov-95

Method**		MDL*	Reporting Limit*	
	trans-1,3-Dichloropropene	0.03	0.15	ug/L
	cis-1,3-Dichloropropene	0.03	0.15	
	1,1,2-Trichloroethane	0.05	0.25	
	1,1,2,2-Tetrachloroethane	0.19	0.95	
	Chlorodibromomethane	0.08	0.4	
	Chlorobenzene	0.11	0.55	
	Bromoform	0.08	0.4	
	Tetrachloroethene	0.1	0.5	
	1,3-Dichlorobenzene	0.08	0.4	
	1,4-Dichlorobenzene	0.07	0.35	
	1,2-Dichlorobenzene	0.12	0.6	
	2-Chloroethyl vinyl ether	1.4	7	
6010A	**Metals by ICP**			
	Aluminum	26	50	mg/kg DB
	Arsenic	2	10	
	Barium	15	50	
	Beryllium	0.3	1	
	Cadmium	0.4	1	
	Calcium	83	100	
	Chromium	2	5	
	Cobalt	3	10	
	Copper	2	5	
	Iron	5	10	
	Lead	2	10	
	Magnesium	36	100	
	Manganese	2	5	
	Mercury	3	20	
	Antimony	4	6	
	Nickel	3	5	
	Potassium	69	100	
	Selenium	5	20	

SOIL

*Detection and reporting limits for solid samples are calculated based on the assumption of 100% total solids. Actual values will be adjusted upwards by the percent total solids. Limits for all samples will also be adjusted for any dilutions or matrix interferences.

**The method lists provided represent the entire target analyte list for which Laucks currently has MDL studies. The reported project specific target analytes may vary from this list.

VOA-
KEYS
HEA-PEST
THM
TKN
TKN_BD
TL-GF
TNT-MS-SOIL
TOC
TOX
TOX_9076
TP
TPH
TPH_GRAV
VAP-MITC
VOA-390-LOW
VOA-390-MED
VOA-524-2
VOA-524-2-02
VOA-8260
VOA-BECHTEL

MS/MSD Database Configuration

Record name: VOA-8260 Created: 01/31/95
QC Fraction: MVO No: 5 Updated: 05/17/96
Description: INHOUSE VOLATILES

	Def Size	Def Vol	Conc Units
Water	25.0	25.0	ug/L
Soil			

Analyte		Spike Added	Control Limits LCL	UCL	RPD
1,1-Dichloroethene	W	4.00	64	124	20
	S		70	130	20
Trichloroethene	W	4.00	60	120	20
	S		70	130	20
Benzene	W	4.00	67	127	20
	S		70	130	20
Toluene	W	4.00	72	132	21
	S		70	130	20
Chlorobenzene	W	4.00	68	128	20
	S		70	130	20

5=QC fractions 6=print F10=More Shft-Fn=Fn Help

8020
KEYS
04
04_1
552
8010
8015
8015_MOD
8020
8080SC
8140
8141
8150-2
8310
8310-HAW
8310-HC
8330
8330_GTI
8330_MED
8330_OHM
A8015

MS/MSD Database Configuration

Record name: 8020 Created: 05/15/91
QC Fraction: GVO No: 9 Updated: 08/07/96
Description: Purgeable Aromatic Compounds

	Def Size	Def Vol	Conc Units
Water	10.0	10.0	ug/L
Soil	5.00	10.0	ug/kg

Analyte		Spike Added	Control Limits LCL	UCL	RPD
Benzene	W	20.0	76	113	12
	S	20.0	39	136	31
Toluene	W	20.0	72	113	15
	S	20.0	46	132	29
Chlorobenzene	W	20.0	80	113	11
	S	20.0	70	130	50
Ethylbenzene	W	20.0	73	113	14
	S	20.0	32	129	34
m+p-Xylene	W	20.0	73	111	14
	S	20.0	20	139	50
	S	20.0	20	127	31
1,3-Dichlorobenzene	W	20.0	73	113	18
	S	20.0	70	130	50
1,4-Dichlorobenzene	W	20.0	69	115	19
	S	20.0	70	130	50
1,2-Dichlorobenzene	W	20.0	72	118	20
	S	20.0	70	130	50
	W				
	S				
	W				
	S				
	W				
	S				
	W				
	S				
	W				
	S				
	W				
	S				
	W				
	S				
	W				
	S				
	W				
	S				
	W				
	S				
	W				
	S				
	W				
	S				
	W				

F7=Del,/n,Name 8=Write,/n,In_use 9=Print,Db_enter?,Keys? 10=More,Help,Key

P

KEYS
NO2
NO3-NO2
OG
OG_9071
OG_GRAV
ORG_AMM_NH3
P-CHLOROPHEN
P2O5
PB_MISC
PCB
PCB_OIL
PH
PHENOL-4AAP
PIC-PSNS
PO4_O
PO4_T
PROXIMATE
PULP_METALS
PYRIDINE

MS/Duplicate Configuration

Record name: PO4_T
QC Fraction: TP No: 1
Description: Total phosphorus

Created: 08/06/92
Updated: 11/28/94

Analyte		Units	Recov LCL	Recov UCL	RPD LLD	RPD >5xLLD
Total Phosphorus	W	MG/L	54	129	0.010	27
	S	MG/KG	50	150	0.50	30
	W					
	S					
	W					
	S					
	W					
	S				

MS/Duplicate Configuration

KEYS
HG_CV_AA
HG_ICP
HH
HYDRIDE
ICP
ICP_MS
ICP_TCLP
ICP_UMA
ICP_UMATILLA
MBAS
MTDRO
MTGRO
NH3
NO2
NO3-NO2
OG
OG_9071
OG_GRAV
ORG_AMM_NH3

Record name: ICP Created: 02/12/93
QC Fraction: ICP No: 25 Updated: 03/12/93
Description: ICP metals, LTL control limits

Analyte		Units	Recov LCL	Recov UCL	RPD LLD	RPD >5xLLD
Silver	W	UG/L	50	133	1.0	16
	S	MG/KG	58	132	1.0	30
Aluminum	W	UG/L	50	147	20	27
	S	MG/KG	50	150	20	30
Arsenic	W	UG/L	82	122	20	11
	S	MG/KG	70	127	20	30
Barium	W	UG/L	76	112	2.0	16
	S	MG/KG	61	127	2.0	20
Beryllium	W	UG/L	79	132	1.0	10
	S	MG/KG	84	122	0.10	10
Calcium	W	UG/L	50	150	5000	30
	S	MG/KG	50	150	250	30
		RPD/L	70	127	1.0	14
	S	MG/KG	60	138	0.50	21
Cobalt	W	UG/L	81	115	2.0	16
Chromium	W	UG/L	75	117	1.0	21
	S	MG/KG	60	134	1.0	30
Copper	W	UG/L	77	116	1.0	10
	S	MG/KG	50	150	1.0	30
Iron	W	UG/L	80	120	10	20
	S	MG/KG				
Mercury	W	UG/L	64	115	20	13
	S	MG/KG	56	110	20	10
Potassium	W	UG/L	75	123	5000	12
	S	MG/KG	50	150	250	30
Magnesium	W	UG/L	50	150	5000	22
	S	MG/KG	50	150	250	30
Manganese	W	UG/L	59	131	1.0	30
	S	MG/KG	50	150	1.0	30
Sodium	W	UG/L	50	150	5000	29
	S	MG/KG	50	150	250	30
Nickel	W	UG/L	77	115	2.0	10
	S	MG/KG	69	124	2.0	21
Lead	W	UG/L	69	127	5.0	18
	S	MG/KG	50	148	5.0	30
Antimony	W	UG/L	71	131	60	29
	S	MG/KG	30	94	10	30
Selenium	W	UG/L	74	137	20	24
	S	MG/KG	67	129	20	10
Thallium	W	UG/L	72	113	50	10
	S	MG/KG	68	116	50	10
Vanadium	W	UG/L	84	115	5.0	17
	S	MG/KG	68	125	5.0	22
Zinc	W	UG/L	68	131	1.0	20
	S	MG/KG	50	150	1.0	30
Boron	W	UG/L	50	150	1000	30
	S	MG/KG	50	150	100	30
Molybdenum	W	UG/L	50	150	50	30
	S	MG/KG	50	150	5.0	30
	W					
	S					

CLLD=analyte LLD, >5xLLD=percent

F7=Del,,Name 8=Write,,In_use 9=Print,Help menu,PrtSc 10=More,Help,Key

NH

KEYS

C8015
KC8260
MALATHION
MBAS
MMAN
MS_ORD
MS_TIN
MTBE_GC
MTDRO
MTGRO
NH3
NO2
NO3-NO2
OG
OG_GRAV
OP
ORD-DEG-LC
ORDNANCE_GC
ORDNANCE_LC

MS/MSD Database Configuration

Record name: NH3 Created: 03/01/91
QC Fraction: NH3 No: 1 Updated: 03/15/93
Description: Ammonia, Lachat phenate method

	Def Size	Def Vol	Conc Units
Water			mg/L
Soil			mg/kg DB

Analyte		Spike Added	Control Limits LCL	UCL	RPD
Ammonia as N (EPA 350.1)	W	0.500	53	120	10
	S		50	128	30
	W				
	S				
	W				
	S				
	W				
	S				
	W				
	S				
	W				
	S				
	W				
	S				
	W				
	S				
	W				
	S				
	W				
	S				
	W				
	S				
	W				
	S				
	W				
	S				
	W				
	S				
	W				
	S				
	W				
	S				
	W				
	S				
	W				
	S				
	W				
	S				
	W				
	S				
	W				
	S				
	W				
	S				
	W				
	S				
	W				

5=QC fractions 6=print F10=More Shft-Fn=Fn Help

TKN
KEYS
CLP-ICP
TCLP-MSVOA
TCLP-PEST
TCLP-PYRIDIN
THEA-PEST
THM
TKN
TKN_BD
TL-GF
TNT-MS-SOIL
TOC
TOX
TOX_9076
TP
TPH
TPH_GRAV
VAP-MITC
VOA-390-LOW
VOA-390-MED

MS/MSD Database Configuration

Record name: TKN
QC Fraction: TKN No: 1
Description: Total Kjeldahl Nitrogen

Created: 03/06/91
Updated: 03/15/93

	Def Size	Def Vol	Conc Units
Water			mg/L
Soil			mg/kg DB

Analyte		Spike Added	Control Limits LCL	UCL	RPD
Total Kjeldahl Nitrogen	W		61	142	19
	S		50	150	30
	W				
	S				
	W				
	S				
	W				
	S			

NO
KEYS
BAS
MAN
MS_ORD
MS_TIN
MTBE_GC
MTDRO
MTGRO
NH3
NO2
NO3-NO2
OG
OG_GRAV
OP
ORD-DEG-LC
ORDNANCE_GC
ORDNANCE_LC
P-CL-PHENOL
PB-GF
PB_MISC

MS/MSD Database Configuration

Record name: NO3-NO2 Created: 02/26/91
QC Fraction: NN No: 1 Updated: 03/15/93
Description: NO3/NO2, Lachat, Cd reduction

	Def Size	Def Vol	Conc Units
Water			mg/L
Soil			mg/kg DB

Analyte		Spike Added	Control Limits LCL	UCL	RPD
Nitrate/Nitrite (EPA 353.2)	W	0.500	68	122	10
	S		57	109	18
	W				
	S				
	W				
	S				
	W				
	S			

MS/MSD Database Configuration

Record name: WTPH
QC Fraction: GVO No: 3
Description: Total Petroleum Hydrocarbons

	Def Size	Def Vol	Conc Units
Water	400	2.00	ug/L
Soil	20.0	10.0	mg/kg

Analyte	Spike Added	Control Limits LCL	UCL	RPD	Reporting Limit
Gasoline		20	160	50	.250 mg/L
		20	160	50	
Diesel		20	160	50	2 mg/L
		20	160	50	
Heavy Oil		20	160	50	100 mg/L
		20	160	50	

MS/MSD Database Configuration

Record name: JP4
QC Fraction: GSV No: 1
Description: JP-4

	Def Size	Def Vol	Conc Units
Water	400	2.00	mg/L
Soil	20.0	10.0	mg/kg

Analyte	Spike Added	Control Limits LCL	UCL	RPD	Reporting Limit
JP-4		20	160	50	0.250 mg/L
		20	160	50	

MS/MSD Database Configuration

Record name: JP8
QC Fraction: GSV No: 1
Description: JP-8

	Def Size	Def Vol	Conc Units
Water	400	2.00	mg/L
Soil			

Analyte	Spike Added	Control Limits LCL	UCL	RPD	Reporting Lim
JP-8		20	160	50	0.250 mg/L

MS/MSD Database Configuration

Record name: TPH
QC Fraction: OG No: 1
Description: TPH Oil and Grease by IR

	Def Size	Def Vol	Conc Units
Water			mg/L
Soil			mg/kg DB

Analyte	Spike Added	Control Limits LCL	UCL	RPD
TPH Oil and Grease (IR)		71	119	15
		51	122	26

Reporting Limit = 5.0 mg/kg

APPENDIX D

PROJECT RECORD DRAWINGS AND VENDOR INFORMATION

U.S. ARMY ENGINEER DISTRICT
CORPS OF ENGINEERS
OMAHA, NEBRASKA

Soil Bioventing System
SWMU 136 - Building 1119 Washrack Drainage Pit
100% Design Submittal

Holloman Air Force Base
Alamogordo, New Mexico

CONTRACT: DACW45-94D-0003
DELIVERY ORDER NO. 11, WORK AUTHORIZATION DIRECTIVE NO. 1

THIS DRAWING HAS BEEN REDUCED FROM THE ORIGINAL 40" x 28" SIZE.

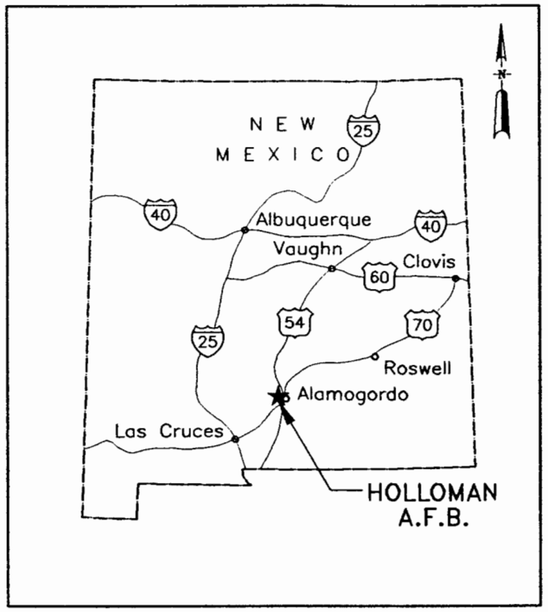

VICINITY MAP

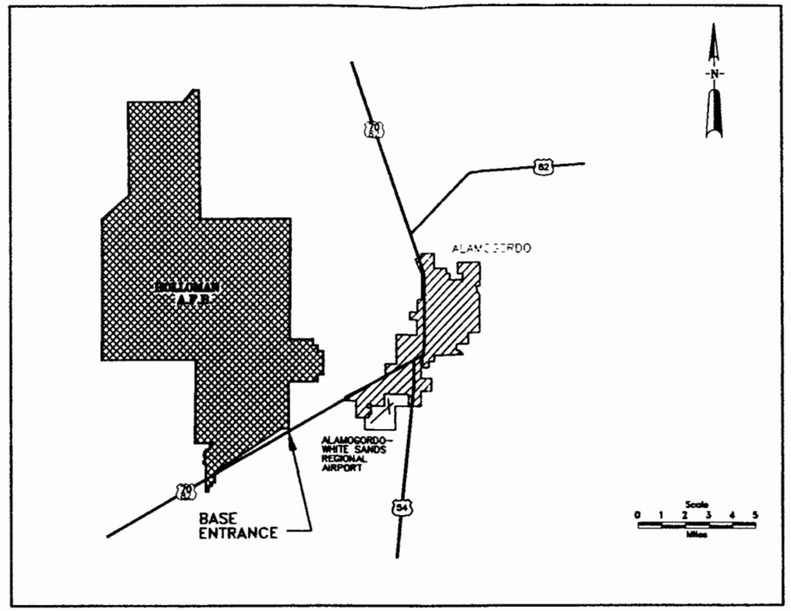

BASE LOCATION PLAN

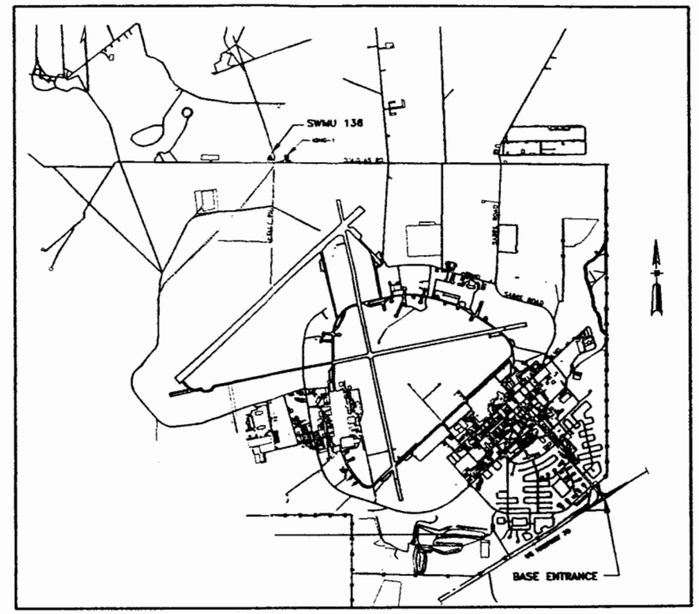

LOCATION MAP

DRAWING INDEX

SHEET NO.	FILE REF.	REVISION	TITLE
1	136-COV.DWG	B	COVER SHEET
2	136-MAP.DWG	B	VICINITY MAP, LOCATION PLAN, DRAWING INDEX
3	136-SS1.DWG	B	EXISTING SITE PLAN AND NEW GENERAL ARRANGEMENT
4	136-DE1.DWG	B	WELL SCHEMATIC
5	136-EL1.DWG	B	PIPING & INSTRUMENTATION DIAGRAM
6	136-DE2.DWG	B	AIR PIPING DETAILS
7	136-ONE.DWG	B	ELECTRICAL SCHEMATIC AND ONE-LINE DIAGRAM
8	136-LAY.DWG	B	ELECTRICAL CONTROL PANEL AND DISTRIBUTION LAYOUT

LEGEND

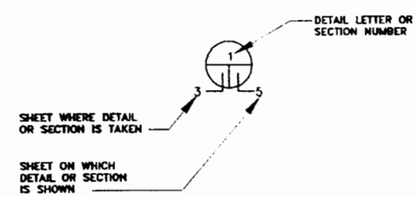

THIS DRAWING HAS BEEN REDUCED FROM THE ORIGINAL 40" x 28" SIZE.

$$ – THINK VALUE ENGINEERING – $$

REVISIONS

SYMBOL	DESCRIPTIONS	DATE	APPROVED
B	100% DESIGN SUBMITTAL	16-DEC-96	R. BORREGO
A	70% DESIGN SUBMITTAL FOR REVIEW	23-AUG-96	R. BORREGO

FOSTER WHEELER
ENVIRONMENTAL CORP.
DENVER, COLO.

U.S. ARMY ENGINEER DISTRICT
CORPS OF ENGINEERS
OMAHA, NEBRASKA

DESIGNED BY: R. BATTALORA
DRAWN BY: C. CONFER
CHECKED BY: R. BORREGO
REVIEWED BY: R. BORREGO
SUBMITTED BY: R. VERSAW

HOLLOMAN AFB, NEW MEXICO
SWMU 136, BUILDING 1119
SOIL BIOVENTING SYSTEM

VICINITY MAP, LOCATION PLAN, DRAWING INDEX

DESIGN FILE: 136-MAP.DWG
DATE: 23-AUG-96
SHEET NUMBER: 2
CONTRACT NO.: DACW45-94D-0003
REVISION: B

GENERAL NOTES:

1. EXISTING SITE PLAN PREPARED FROM SURVEY DATA PROVIDED BY SOUTHWEST ENGINEERING, INC., LAS CRUCES, NM. FIELD SURVEY PERFORMED ON JULY 2, 1996 AND JULY 17, 1996.
2. ALL SURVEY DATA COORDINATES AND COORDINATE GRID VALUES BASED ON NEW MEXICO STATE PLANE COORDINATE SYSTEM (CENTRAL ZONE). COORDINATE VALUES ARE IN UNITS OF FEET. ELEVATIONS BASED ON NATIONAL GEODETIC VERTICAL DATUM OF 1929, AND REFERRED TO AS FEET ABOVE MEAN SEA LEVEL (FT MSL).
3. ALL ITEMS ARE EXISTING UNLESS OTHERWISE NOTED.
4. DO NOT SCALE DISTRIBUTION PIPELINE LOCATIONS. EXACT LOCATION OF DISTRIBUTION PIPELINES TO BE SET BY THE CONSTRUCTION STAFF IN GENERAL CONFORMANCE WITH THIS PLAN.
5. LIMITS OF WORK AREA DEFINE THE AREA WHERE WORK WILL BE PERFORMED AND WHERE STORAGE AND STOCKPILING SHALL OCCUR.

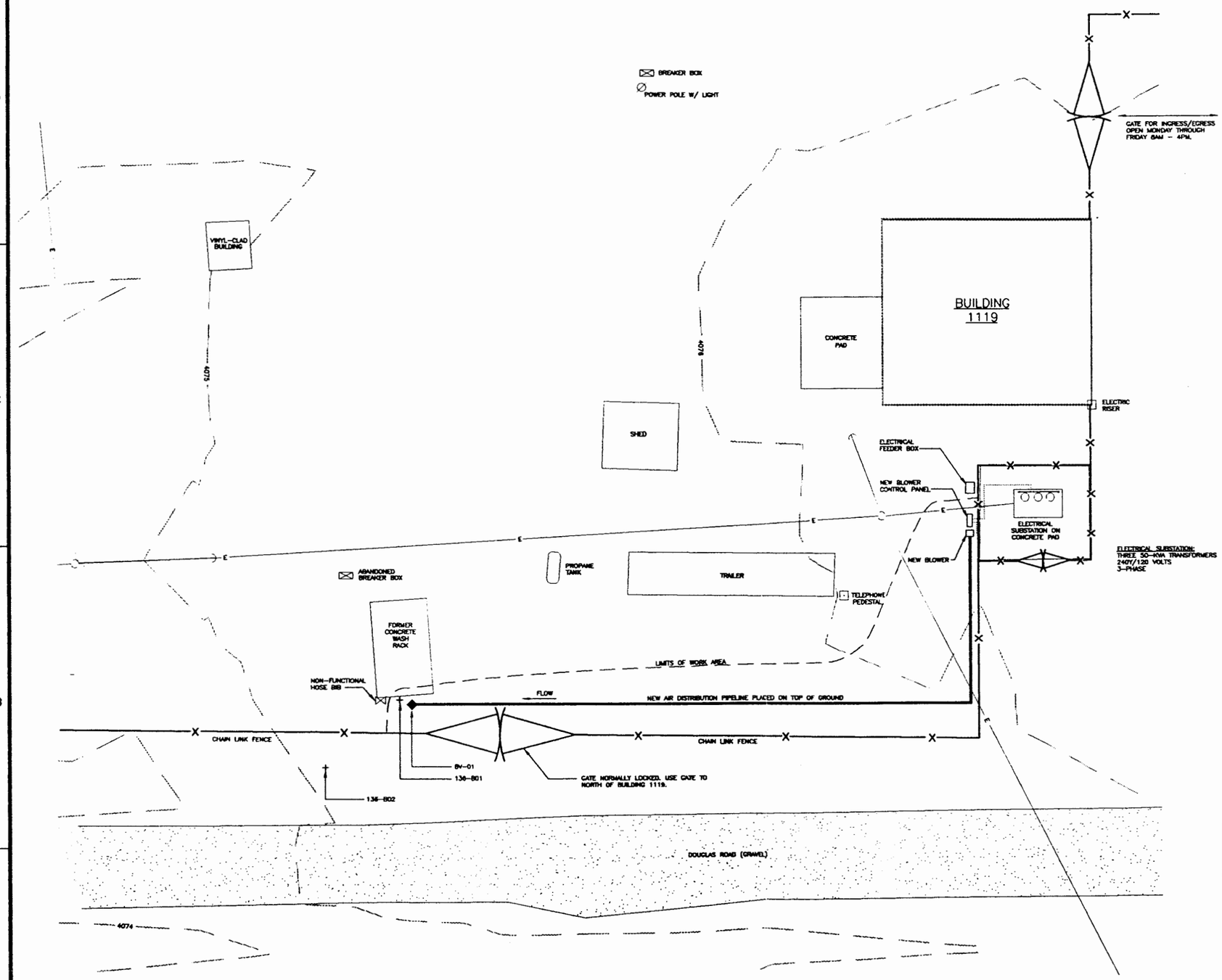

LEGEND:

—E—	OVERHEAD ELECTRICAL LINE
	POWER POLE
—X—X—	FENCE
····4075····	CONTOUR LINE (FT MSL)
◆BV-01	BIOVENT WELL
+136-801	SOIL BORING
▬▬▬	NEW DISTRIBUTION PIPELINE PLACED ON TOP OF GROUND CONNECTING NEW BLOWER STATION TO BIOVENT WELL
·····	NEW CONDUIT AND WIRING
— —	LIMITS OF WORK AREA

N

0 5 10 20 40

GRAPHIC SCALE (FEET)

SURVEYED COORDINATES

ID	DESCRIPTION	NORTHING (FT)	EASTING (FT)
136-801	SOIL BORING DRILLED 04-NOV-93	881,561.47	540,348.73
136-802	SOIL BORING DRILLED 04-NOV-93	881,335.18	540,330.54
BV-01	BIOVENT WELL INSTALLED 22-JUL-96	881,580.34	540,351.89

THIS DRAWING HAS BEEN REDUCED FROM THE ORIGINAL 40" x 28" SIZE.

$$ – THINK VALUE ENGINEERING – $$

REVISIONS

SYMBOL	DESCRIPTIONS	DATE	APPROVED
B	100% DESIGN SUBMITTAL	16-DEC-96	R. BORREGO
A	70% DESIGN SUBMITTAL FOR REVIEW	23-AUG-96	R. BORREGO

FOSTER WHEELER ENVIRONMENTAL CORP. DENVER, COLO.

U.S. ARMY ENGINEER DISTRICT CORPS OF ENGINEERS OMAHA, NEBRASKA

HOLLOMAN AFB, NEW MEXICO
SWMU 136, BUILDING 1119
SOIL BIOVENTING SYSTEM

EXISTING SITE PLAN AND NEW GENERAL ARRANGEMENT

DESIGNED BY: R. BATTALORA
DRAWN BY: C. CONFER
CHECKED BY: R. BORREGO
REVIEWED BY: R. BORREGO
SUBMITTED BY: R. VERSAW

DESIGN FILE: 136-SS1.DWG
DATE: 23-AUG-96
SHEET NUMBER: 3
CONTRACT NO.: DACW45-94D-0003
REVISION: B

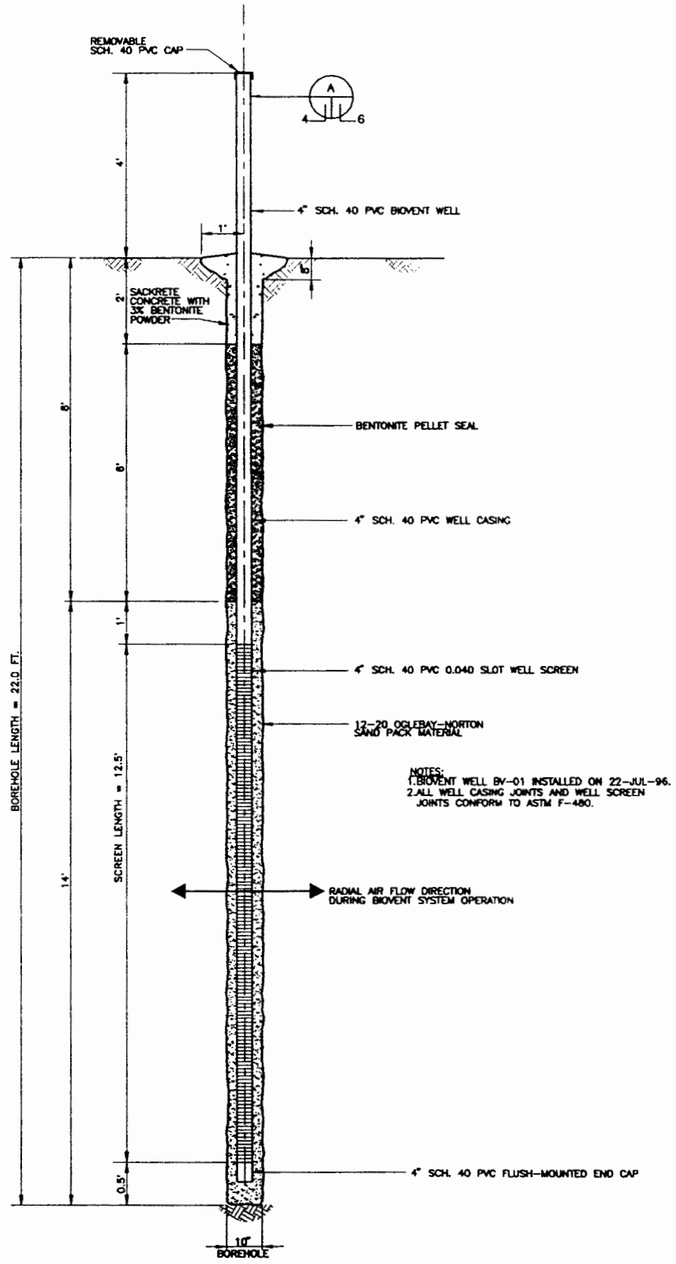

NOTES:
1.BIOVENT WELL BV-01 INSTALLED ON 22-JUL-96.
2.ALL WELL CASING JOINTS AND WELL SCREEN JOINTS CONFORM TO ASTM F-480.

EXISTING BIOVENT WELL BV-01 SCHEMATIC
NOT TO SCALE

THIS DRAWING HAS BEEN REDUCED FROM THE ORIGINAL 40" x 28" SIZE.

$$ - THINK VALUE ENGINEERING - $$

REVISIONS

SYMBOL	DESCRIPTIONS	DATE	APPROVED
B	100% DESIGN SUBMITTAL	16-DEC-96	R. BORREGO
A	70% DESIGN SUBMITTAL FOR REVIEW	23-AUG-96	R. BORREGO

FOSTER WHEELER ENVIRONMENTAL CORP.
DENVER, COLO.

U.S. ARMY ENGINEER DISTRICT
CORPS OF ENGINEERS
OMAHA, NEBRASKA

DESIGNED BY: R. BATTALORA
DRAWN BY: C .CONFER
CHECKED BY: R .BORREGO
REVIEWED BY: R. BORREGO
SUBMITTED BY: R. VERSAW

HOLLOMAN AFB, NEW MEXICO
SWMU 136, BUILDING 1119
SOIL BIOVENTING SYSTEM

WELL SCHEMATIC

DESIGN FILE: 136-DE1.DWG
DATE: 23-AUG-96
SHEET NUMBER: 4
CONTRACT NO.: DACW45-94D-0003
REVISION: B

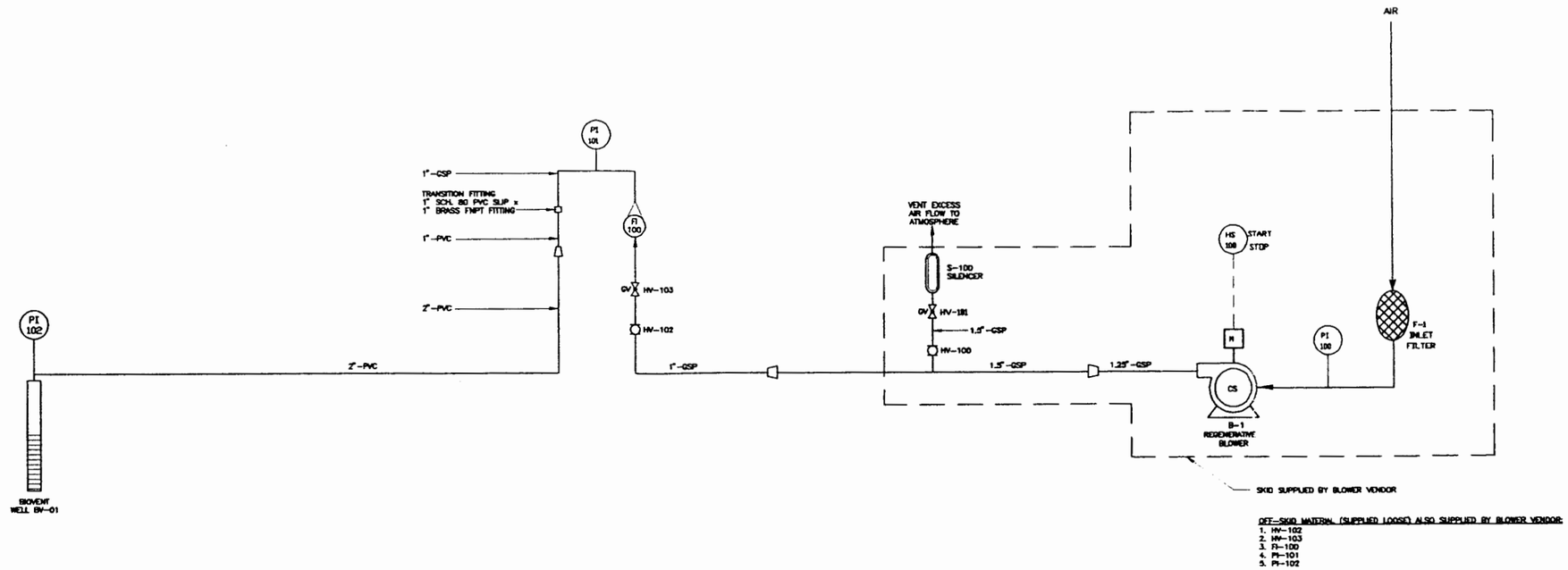

OFF-SKID MATERIAL (SUPPLIED LOOSE) ALSO SUPPLIED BY BLOWER VENDOR:
1. HV-102
2. HV-103
3. FI-100
4. PI-101
5. PI-102

PIPING & INSTRUMENTATION DIAGRAM

NOT TO SCALE

LEGEND

▷	REDUCER
□	TRANSITION
	BALL VALVE
GV	GLOBE VALVE
GSP	GALVANIZED STEEL PIPE
PVC	POLYVINYL CHLORIDE

$$ – THINK VALUE ENGINEERING – $$

REVISIONS

SYMBOL	DESCRIPTIONS	DATE	APPROVED
B	100% DESIGN SUBMITTAL	18-DEC-96	R. BORREGO
A	70% DESIGN SUBMITTAL FOR REVIEW	23-AUG-96	R. BORREGO

FOSTER WHEELER ENVIRONMENTAL CORP.
DENVER, COLO.

U.S. ARMY ENGINEER DISTRICT
CORPS OF ENGINEERS
OMAHA, NEBRASKA

HOLLOMAN AFB, NEW MEXICO
SWMU 136, BUILDING 1119
SOIL BIOVENTING SYSTEM

PIPING & INSTRUMENTATION DIAGRAM

DESIGNED BY: C. ANDERSON/ R. BATTALORA
DRAWN BY: C. CONFER
CHECKED BY: R. BORREGO
REVIEWED BY: R. BORREGO
SUBMITTED BY: R. VERSAW

DESIGN FILE: 136-EL1.DWG
DATE: 23-AUG-96
CONTRACT NO.: DACW45-940-0003
SHEET NUMBER: 5
REVISION: B

THIS DRAWING HAS BEEN REDUCED FROM THE ORIGINAL 40" x 28" SIZE.

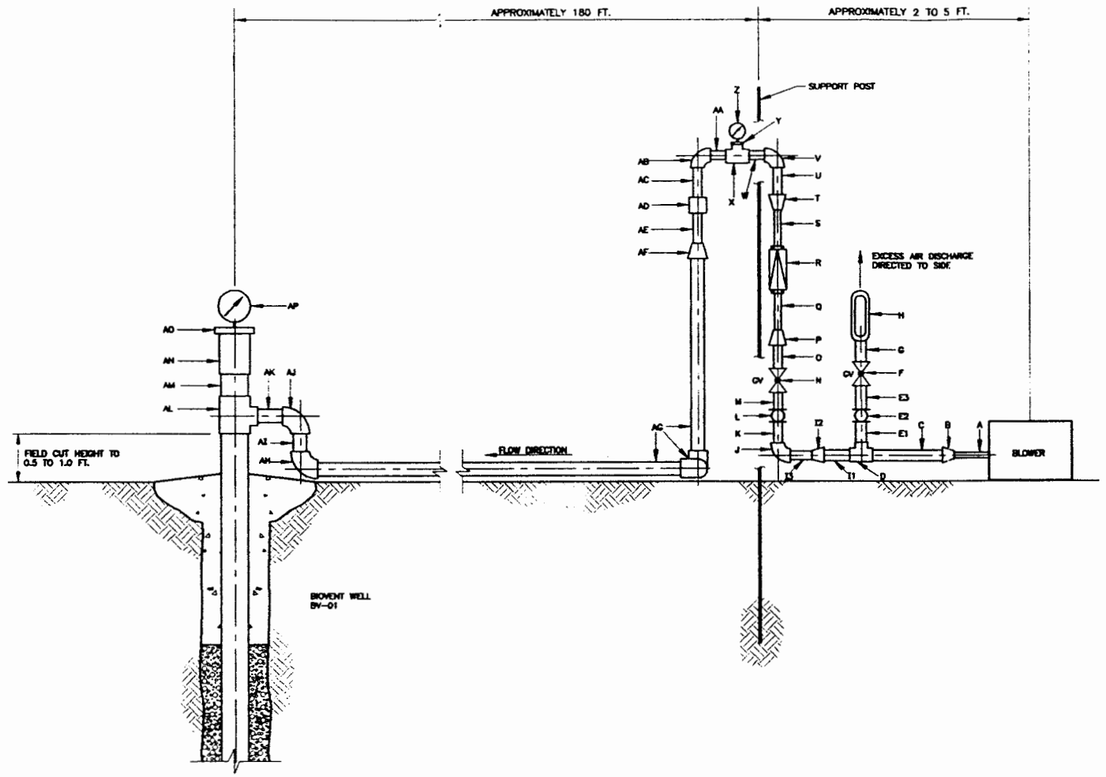

DETAIL
BIOVENT WELL AND AIR DISTRIBUTION PIPE CONNECTION
NOT TO SCALE

SCHEDULE OF PIPE, VALVES, AND FITTINGS

ITEM	MATERIAL	DESCRIPTION
A	GALV. STEEL	1.25" NIPPLE x 4" LENGTH
B	GALV. STEEL	1.5" x 1.25" REDUCER
C	GALV. STEEL	1.5" NIPPLE x 4" LENGTH
D	GALV. STEEL	1.5" TEE
E1	GALV. STEEL	1.5" NIPPLE x 4" LENGTH
E2	BRONZE	1.5" BALL VALVE (FNPT CONNECTIONS)
E3	GALV. STEEL	1.5" NIPPLE x 4" LENGTH
F	BRONZE	1.5" GLOBE VALVE (FNPT CONNECTIONS)
G	GALV. STEEL	1.5" NIPPLE x 4" LENGTH
H	METAL	SILENCER W/ 1.5" FNPT END
I1	GALV. STEEL	1.5" NIPPLE x 4" LENGTH
I2	GALV. STEEL	1.5" x 1" REDUCER
I3	GALV. STEEL	1" NIPPLE x 4" LENGTH
J	GALV. STEEL	1" ELBOW
K	GALV. STEEL	1" NIPPLE x 4" LENGTH
L	BRONZE	1" BALL VALVE (FNPT CONNECTIONS)
M	GALV. STEEL	1" NIPPLE x 4" LENGTH
N	BRONZE	1" GLOBE VALVE (FNPT CONNECTIONS)
O	GALV. STEEL	1" NIPPLE x 4" LENGTH
P	GALV. STEEL	1" X 0.5" REDUCER
Q	GALV. STEEL	0.5" PIPE (LENGTH AS REQUIRED BY FLOWMETER MANUFACTURER) (APPROX. LENGTH = 12")
R	METAL BODY	IN-LINE FLOWMETER W/ 0.5" FNPT METAL CONNECTIONS
S	GALV. STEEL	0.5" PIPE (LENGTH AS REQUIRED BY FLOWMETER MANUFACTURER) (APPROX. LENGTH = 6")
T	GALV. STEEL	1" X 0.5" REDUCER
U	GALV. STEEL	1" NIPPLE x 4" LENGTH
V	GALV. STEEL	1" ELBOW
W	GALV. STEEL	1" NIPPLE x 4" LENGTH
X	GALV. STEEL	1" TEE
Y	BRASS	1" MNPT x 0.25" FNPT HEX BUSHING
Z	METAL	SIDE-MOUNTED PRESSURE GAUGE W/ 0.25" MNPT CONNECTION
AA	GALV. STEEL	1" NIPPLE x 4" LENGTH
AB	GALV. STEEL	1" ELBOW
AC	GALV. STEEL	1" NIPPLE x 4" LENGTH
AD	PVC/BRASS	1" SCH. 80 PVC SLIP x 1" FNPT BRASS FEMALE ADAPTER
AE	PVC	1" SCH. 40 NIPPLE x 4" LENGTH
AF	PVC	1" X 2" SCH. 40 REDUCER
AG	PVC	2" SCH. 40 PIPE AND ELBOWS AS REQUIRED
AH	PVC	2" SCH. 40 ELBOW
AI	PVC	2" SCH. 40 PIPE
AJ	PVC	2" SCH. 40 ELBOW
AK	PVC	2" SCH. 40 PIPE
AL	PVC	4" x 4" X 2" SCH. 40 REDUCING TEE (ALL SLIP CONNECTIONS)
AM	PVC	4" SCH. 40 NIPPLE x 12" LENGTH
AN	PVC	PVC 4" SCH. 40 FEMALE ADAPTER (BOTTOM SLIP x TOP FNPT)
AO	PVC	4" SCH. 40 PLUG (BOTTOM MNPT) (TAP TOP W/ 0.25" FNPT) – REMOVE PLUG FOR INTERNAL WELL ACCESS
AP	METAL	SIDE MOUNTED PRESSURE GAUGE W/ 0.25" MNPT CONNECTION

NOTES:
1. WRAP ALL MNPT PIPE THREADS WITH TEFLON TAPE BEFORE CONNECTING.

LEGEND

- REDUCER
- TRANSITION
- BALL VALVE
- GLOBE VALVE
- GSP — GALVANIZED STEEL PIPE
- PVC — POLYVINYL CHLORIDE

THIS DRAWING HAS BEEN REDUCED FROM THE ORIGINAL 40" x 28" SIZE.

$$ – THINK VALUE ENGINEERING – $$

REVISIONS

SYMBOL	DESCRIPTIONS	DATE	APPROVED
B	100% DESIGN SUBMITTAL	18-DEC-96	R. BORREGO
A	70% DESIGN SUBMITTAL FOR REVIEW	23-AUG-96	R. BORREGO

FOSTER WHEELER ENVIRONMENTAL CORP.
DENVER, COLO.

U.S. ARMY ENGINEER DISTRICT
CORPS OF ENGINEERS
OMAHA, NEBRASKA

HOLLOMAN AFB, NEW MEXICO
SWMU 136, BUILDING 1119
SOIL BIOVENTING SYSTEM

AIR PIPING DETAILS

DESIGNED BY: R. BATTALORA
DRAWN BY: C .CONFER
CHECKED BY: R. BORREGO
REVIEWED BY: R. BORREGO
SUBMITTED BY: R. VERSAW

DESIGN FILE: 136-DE2.DWG
DATE: 23-AUG-96
SHEET NUMBER: 6
CONTRACT NO.: DACW45-94D-0003
REVISION: B

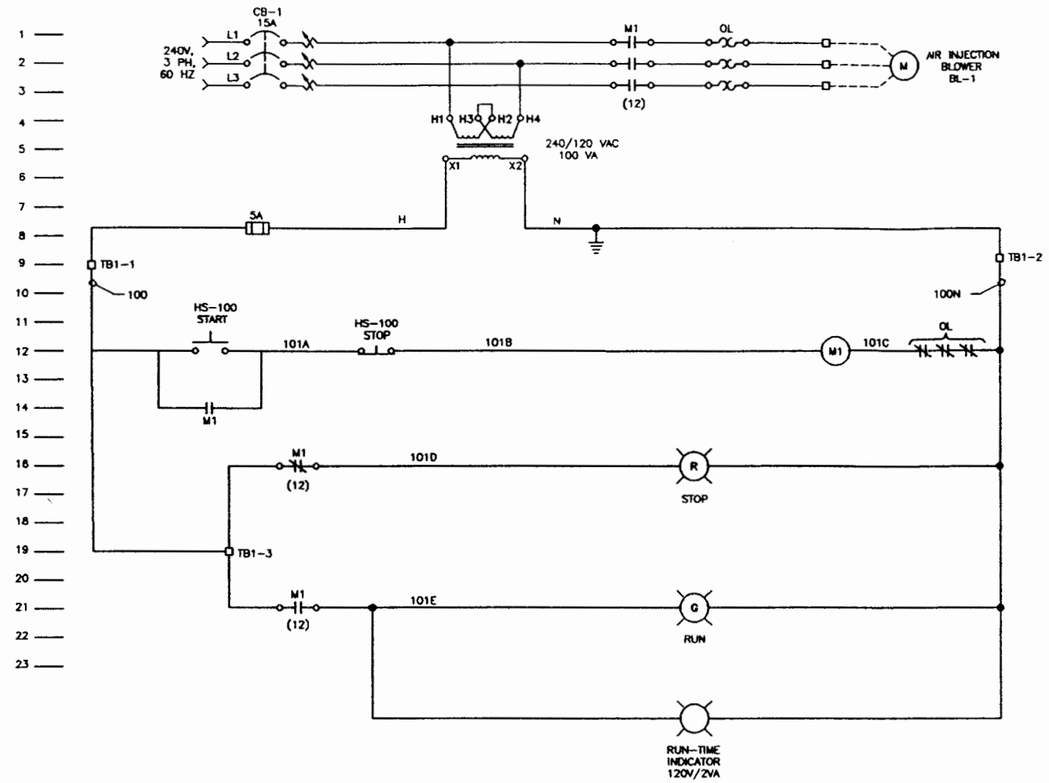

ELECTRICAL SCHEMATIC

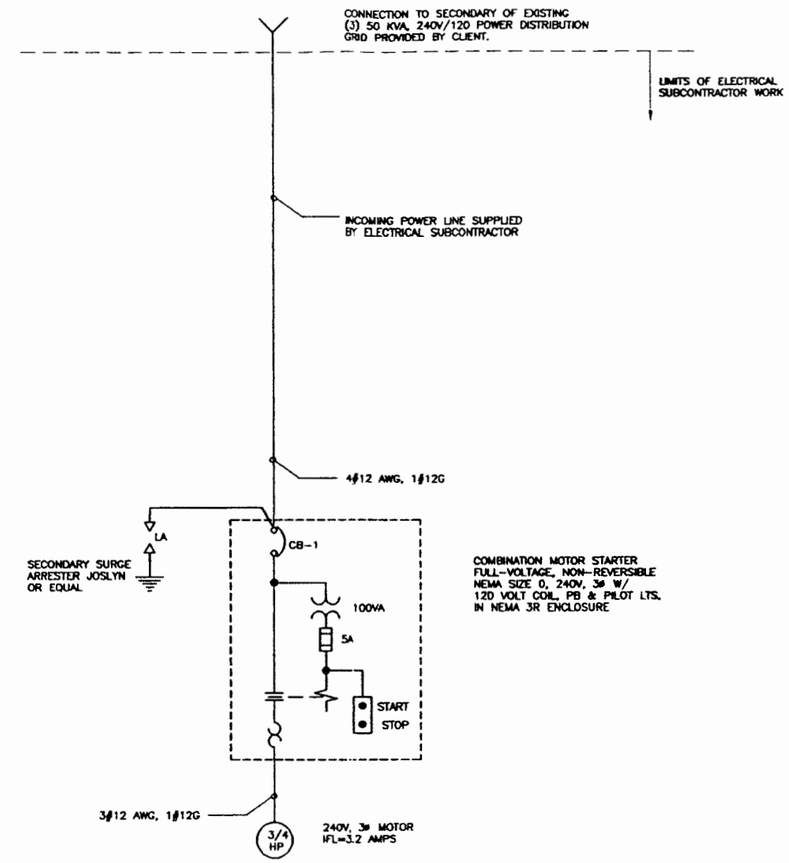

ONE-LINE DIAGRAM

THIS DRAWING HAS BEEN REDUCED FROM THE ORIGINAL 40" x 28" SIZE.

$$ - THINK VALUE ENGINEERING - $$

REVISIONS

SYMBOL	DESCRIPTIONS	DATE	APPROVED
B	100% DESIGN SUBMITTAL	16-DEC-96	J. EDWARDS
A	70% DESIGN SUBMITTAL FOR REVIEW	23-AUG-96	J. EDWARDS

FOSTER WHEELER
ENVIRONMENTAL CORP.
DENVER, COLO.

U.S. ARMY ENGINEER DISTRICT
CORPS OF ENGINEERS
OMAHA, NEBRASKA

DESIGNED BY: C. ANDERSON
DRAWN BY: C. CONFER
CHECKED BY: J. EDWARDS
REVIEWED BY: J. EDWARDS
SUBMITTED BY: R. VERSAW

HOLLOMAN AFB, NEW MEXICO
SWMU 136, BUILDING 1119
SOIL BIOVENTING SYSTEM

ELECTRICAL SCHEMATIC
AND ONE-LINE DIAGRAM

DESIGN FILE: 136-ONE.DWG
DATE: 23-AUG-96
SHEET NUMBER: 7
CONTRACT NO.: DACW45-94D-0003
REVISION: B

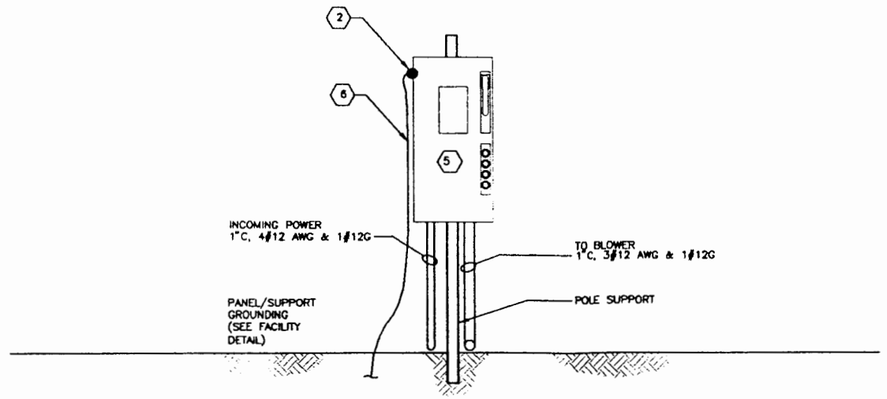

ELECTRICAL PANEL LAYOUT

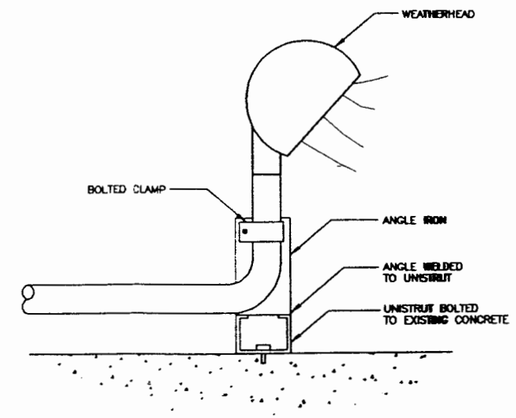

DETAIL A

MATERIAL LIST

(5) COMBINATION MOTOR STARTER, 240V, 3Ø, FVNR. NEMA SIZE 0 WITH MOTOR CIRCUIT PROTECTION CIRCUIT BREAKER, (2) OIL TIGHT PUSH BUTTONS WITH (2) LEGEND PLATES, ONE ENGRAVED "START" AND THE OTHER ENGRAVED "STOP". (2) TRANSFORMER TYPE INDICATING LIGHTS – (1) RED, (1) GREEN WITH (2) LEGEND PLATES. LEGEND PLATE FOR RED LIGHT TO BE ENGRAVED "BLOWER STOP", AND FOR THE GREEN LIGHT "BLOWER RUN". NEMA 3R ENCLOSURE.

(6) WIRE TINNED COPPER, 1/C #1/0 AWG, STRANDED, MEDIUM HARD DRAWN

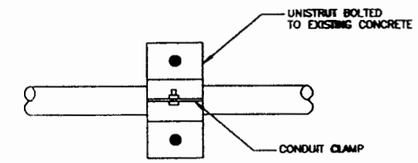

TOP

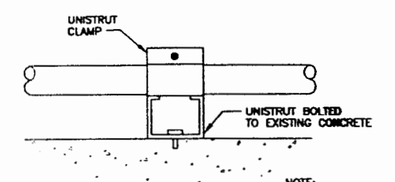

ELEVATION

NOTE:
CONDUIT SHALL BE ELEVATED ABOVE CONCRETE OR GROUND SURFACE

DETAIL B

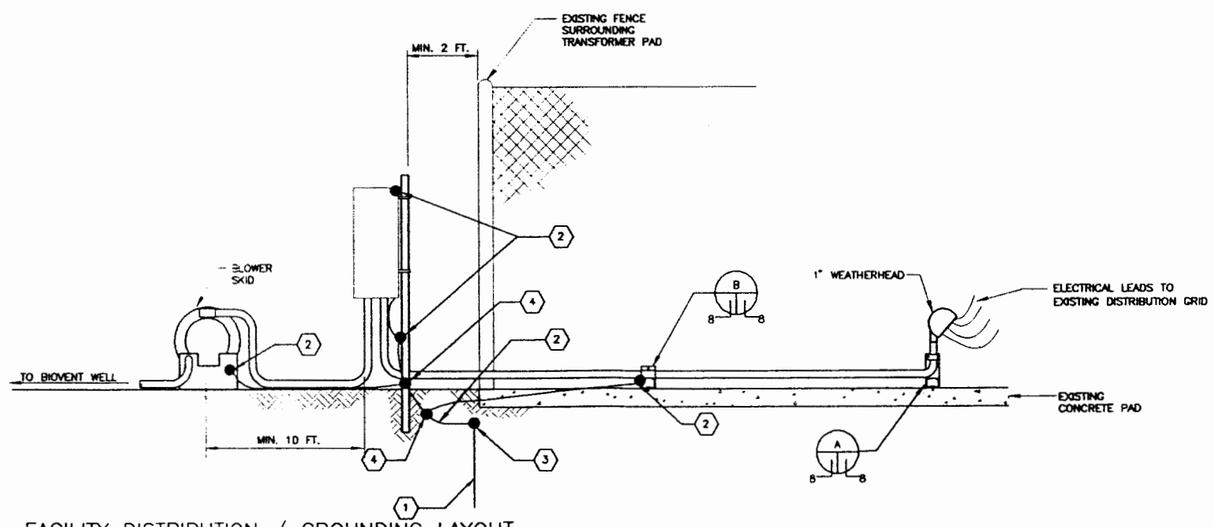

FACILITY DISTRIBUTION / GROUNDING LAYOUT

MATERIAL LIST

(1) GROUND ROD, COPPER-WELD, 3/4"-20'-0"

(2) GROUND CONNECTION, OZ/GEDNEY, TYPE CG

(3) CONNECTION, THERMIC WELD TYPE FOR #1 AWG STRANDED COPPER CABLE TO 3/4" DIA. COPPER GROUND ROD. CABLE TAP TO TOP OF ROD. CADWELD TYPE GTC-1830. COMPLETE W/ MOLD AND WELD METAL #115.

(4) CONNECTOR, FOR CABLE TO CABLE TO CABLE. CADWELD. SIZE AS REQUIRED. #1 AWG TO #1 AWG CROSS. CADWELD CAT #XBM-2020.250 AND #1 AWG TO #1 AWG TEE. CAT #TAC-2020.150.

NOTE:
ITEMS 2, 3, AND 4 ARE SHOWN SCHEMATICALLY – THEY ARE NOT BURIED.

THIS DRAWING HAS BEEN REDUCED FROM THE ORIGINAL 40" x 28" SIZE.

$$ – THINK VALUE ENGINEERING – $$

REVISIONS

SYMBOL	DESCRIPTIONS	DATE	APPROVED
B	100% DESIGN SUBMITTAL	16-DEC-96	J. EDWARDS
A	70% DESIGN SUBMITTAL FOR REVIEW	23-AUG-96	J. EDWARDS

FOSTER WHEELER ENVIRONMENTAL CORP.
DENVER, COLO.

U.S. ARMY ENGINEER DISTRICT
CORPS OF ENGINEERS
OMAHA, NEBRASKA

HOLLOMAN AFB, NEW MEXICO
SWMU 136, BUILDING 1119
SOIL BIOVENTING SYSTEM

ELECTRICAL CONTROL PANEL AND DISTRIBUTION LAYOUT

DESIGNED BY: C. ANDERSON
DRAWN BY: C. CONFER
CHECKED BY: J. EDWARDS
REVIEWED BY: J. EDWARDS
SUBMITTED BY: R. VERSAW

DESIGN FILE: 136-LAY.DWG
DATE: 23-AUG-96
SHEET NUMBER: 8
CONTRACT NO.: DACW45-94D-003
REVISION: B

fti fluid technology, inc.

CONTRACT SUBMITTAL DATA

PRESENTED TO

FOSTER WHEELER ENVIRONMENTAL CORPORATION
143 UNION BLVD., SUITE 1010
LAKEWOOD, CO 80228

FROM

CINDY COOK
FLUID TECHNOLOGY, INC.
1315 NELSON UNIT H
LAKEWOOD, CO 80215

BLOWER SYSTEM AT SITE SWMU 136
HOLLOMAN AFB, NEW MEXICO

27 FEBRUARY 1997

1315 NELSON #H • LAKEWOOD, COLORADO 80215
(303) 233-7400

fti fluid technology, inc.

7 February 1997

Foster Wheeler Environmental Corporation
Mr. Terry Harr, Purchasing Agent
143 Union Boulevard, Suite 1010
Lakewood, CO 80228

Subject: Request for Proposal No. 442 for Blower System at Site SWMU 136
Revision without control panel

Dear Mr. Harr,

In response to your request for quotation on the above subject, we are pleased to offer the following:

(1) E G & G Rotron DR353BR72 regenerative blower package mounted on a steel frame. Package to be complete with an oversized inlet filter, pressure gauge, flow control valve, and flowmeter. The blower is close coupled to a 3/4 HP, 230/460 volt, 3 phase motor.
.....$2,320.00 net

The above unit is quoted FOB our shop in Lakewood, CO. Delivery can be made approximately 3-4 weeks after approval of drawings.

If you have any questions or need further information, please don't hesitate to call. Thank you for the opportunity to quote on your equipment needs.

Regards,

Cindy Cook

Cindy Cook

1315 NELSON #H • LAKEWOOD, COLORADO 80215
(303) 233-7400

fti fluid technology, inc.

EQUIPMENT CONTENTS

1. ROTRON DR353BR72 REGENERATIVE BLOWER
2. SOLBERG F-18P-150 INLET FILTER
3. KOBOLD SV-5103-LB FLOW METER
4. ASHCROFT 0-5 PSI PRESSURE GAUGE
5. ASHCROFT 0-30 "HG VACUUM GAUGE
6. ROTRON SINGLE CONNECTION DISCHARGE MUFFLER

1315 NELSON #H • LAKEWOOD, COLORADO 80215
(303) 233-7400

DR 353
Regenerative Blower

FEATURES

- Manufactured in the USA
- Maximum flow 84 SCFM
- Maximum pressure 50" WG
- Maximum vacuum 3.3" Hg
- 3/4 HP, TEFC, single phase motor standard
- Blower construction — cast aluminum housing, impeller and cover
- Motor construction — permanently sealed ball bearings
- Inlet and outlet internal muffling
- Quiet operation within OSHA standards
- Shipping weight 52 lbs (23.6 Kg)

ACCESSORIES

- Additional inlet/outlet mufflers
- Slip-on flanges
- Inlet and/or inline filters
- Filter/silencers
- For details see Accessories Section

OPTIONS

- Smaller and larger motors
- 575-volt and XP motors
  Surface treatment or plating
  Single or three phase motors
- Gas tight sealing

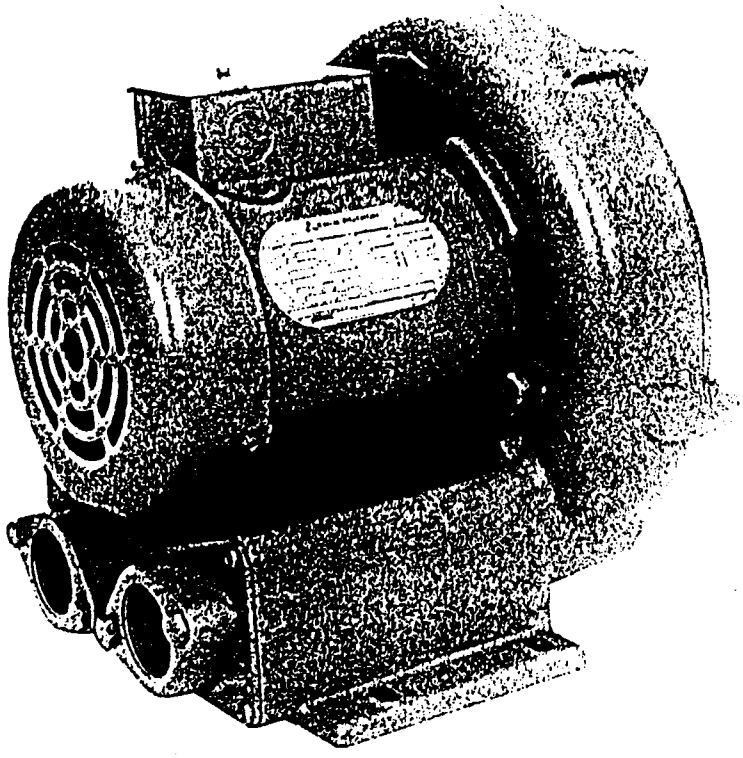

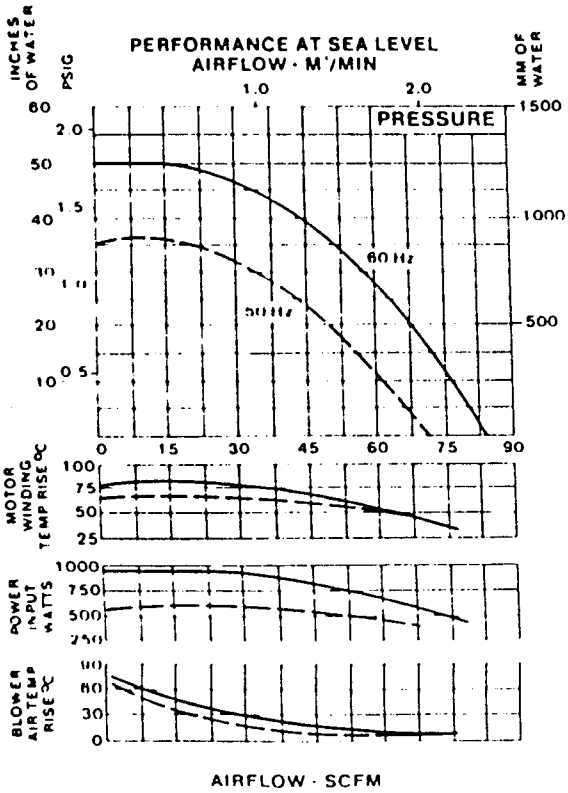

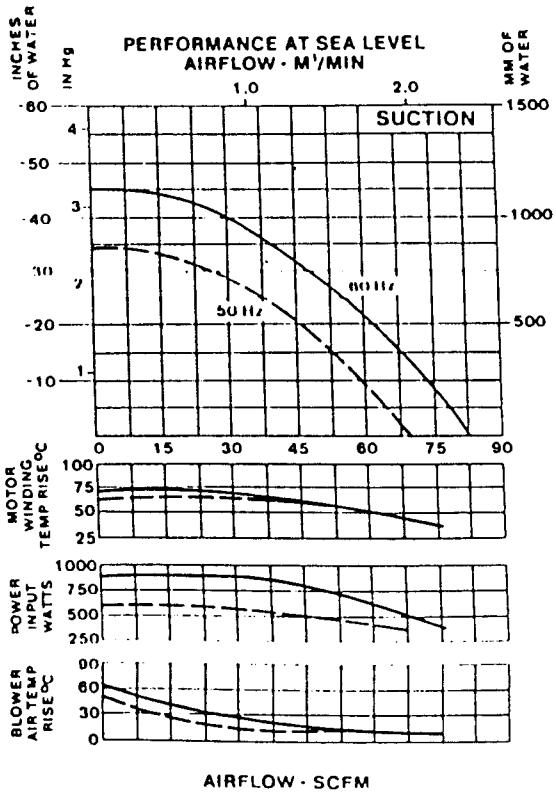

EG&G ROTRON, SAUGERTIES, N.Y. 12477 • 914/246-3401

DR 353
Regenerative Blower

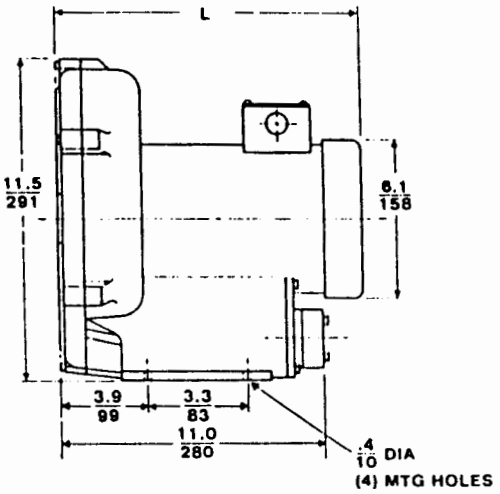

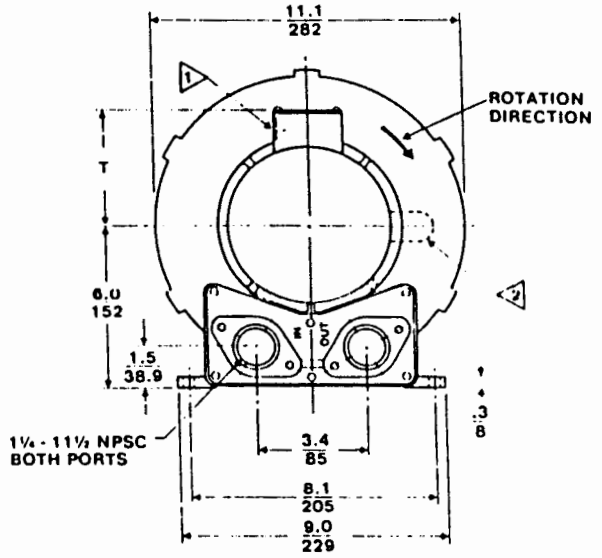

MODEL	L (IN)	L (MM)	T (IN)	T (MM)
DR353BR9	12.9	327	3.5	89
DR353BT58	12.0	304	5.7	144
DR353BR72	11.9	302	3.5	89
DR353BT72	11.33	288	5.7	145
DR353BR86	11.9	302	3.5	89

1 T'BOX CONNECTION .87" DIA. ON TEFC MOTORS, .75 NPT ON XP MOTORS

2 LOCATION OF CAPACITOR ON SINGLE PHASE MOTORS

DIMENSIONS: IN / MM
TOLERANCE: .X ± .08/2

Specifications Subject To Change Without Notice.

SPECIFICATIONS

MODEL	DR353BR9	DR353BT58	DR353BR72	DR353BT72	DR353BR86
Part No.	037147	037149	037148	037150	037146
Motor Enclosure Type	TEFC	XP	TEFC	XP	TEFC
Motor Horsepower	3/4	3/4	3/4	3/4	3/4
Voltage[1]	115/230	115/230	230/460	230/460	575
Phase	1	1	3	3	3
Frequency[1] (Hz)	60	60	60	60	60
Insulation Class[2]	F	B	F	B	F
NEMA Rated Motor Amps	6.8/3.4	8.8/4.4	2.4/1.2	2.0/1.0	1.0
Service Factor	1.15	1.0	1.15	1.0	1.15
Locked Rotor Amps	32.8/16.4	32.8/16.4	17.7/8.9	17.7/8.9	6.4
Max. Blower Amps	7.0/3.5	7.0/3.5	2.65/1.33	2.65/1.33	0.88
Recommended NEMA Starter Size	00/00	00/00	00/00	00/00	00
Shipping Weight lbs (Kg)	52 (23.6)	65 (29.5)	44 (20.0)	61 (27.7)	56 (25.4)

BLOWER LIMITATIONS FOR 60 Hz (50 Hz)

Max. Pressure — IWG	48 (36)	48 (36)	50 (37)	50 (37)	50
Max. Suction — IWG	43 (33)	43 (33)	45 (34)	45 (34)	45
Min. Flow — Pressure — SCFM	0 (0)	0 (0)	0 (0)	0 (0)	0
Min. Flow — Suction — SCFM	0 (0)	0 (0)	0 (0)	0 (0)	0

[1] All dual voltage 3 phase motors are factory tested and certified to operate on 200-230/400-460 VAC-3 ph-60 Hz and 220-240/380-415 VAC-3 ph-50 Hz. All dual voltage 1 phase motors are factory tested and certified to operate on 110-120/200-230 VAC-1 ph-60 Hz and 220-240 VAC-1 ph-50 Hz.

[2] Maximum operating temperatures: Motor winding temperature (winding rise plus ambient) should not exceed 140°C for Class F insulation or 120°C for Class B insulation. Blower outlet air temperature should not exceed 140°C (air temperature rise plus ambient).

Service and Parts Manual for Blower Model DR068 - DR353

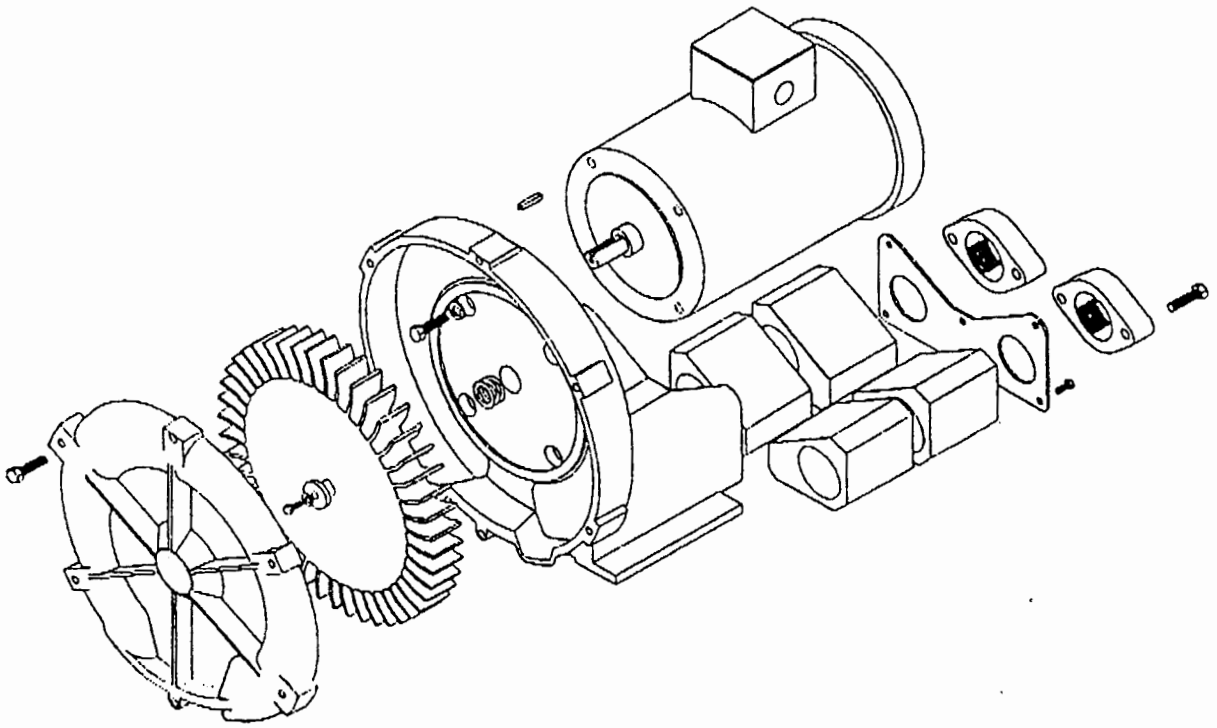

EG&G ROTRON
INDUSTRIAL DIVISION

NORTH STREET
SAUGERTIES, NY 12477
PHONE: (914) 246-3401
FAX: (914) 246-3802

Wiring Diagrams, TEFC and ODP Motors

A. 1ø, 6 wire

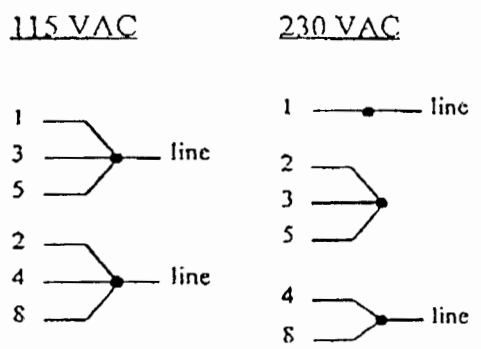

Interchange leadwires 5 & 8 to reverse rotation

B. 1ø, 7 wire

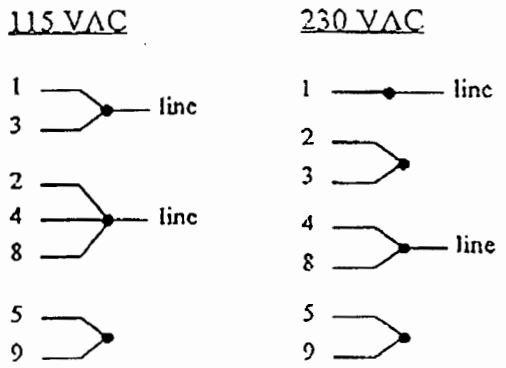

Interchange leadwires 5 & 8 to reverse rotation

C. 3ø, 9 wire

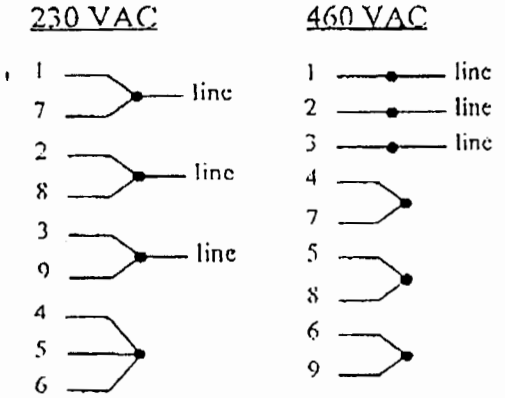

Interchange any two line leads to reverse rotation

D. 1ø, Emerson 1/8 HP Motor

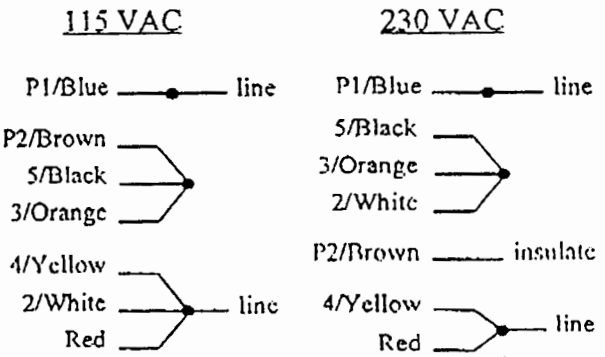

Interchange red & black to reverse rotation

E. 1ø, Spa Duty with Terminal Strips

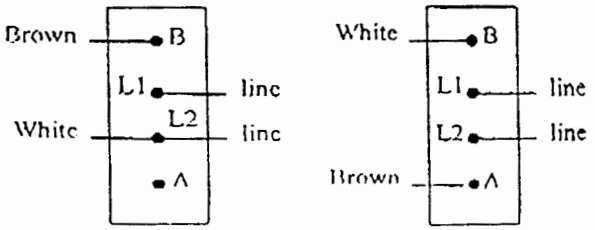

F. 1ø, 230 VAC

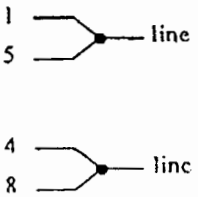

Interchange leadwires 5 & 8 to reverse rotation

G. 3ø, 575 VAC

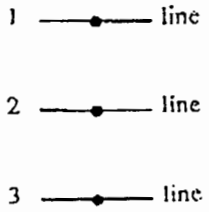

Interchange any two line leads to reverse rotation

ASSEMBLY DIAGRAM
DR XOX

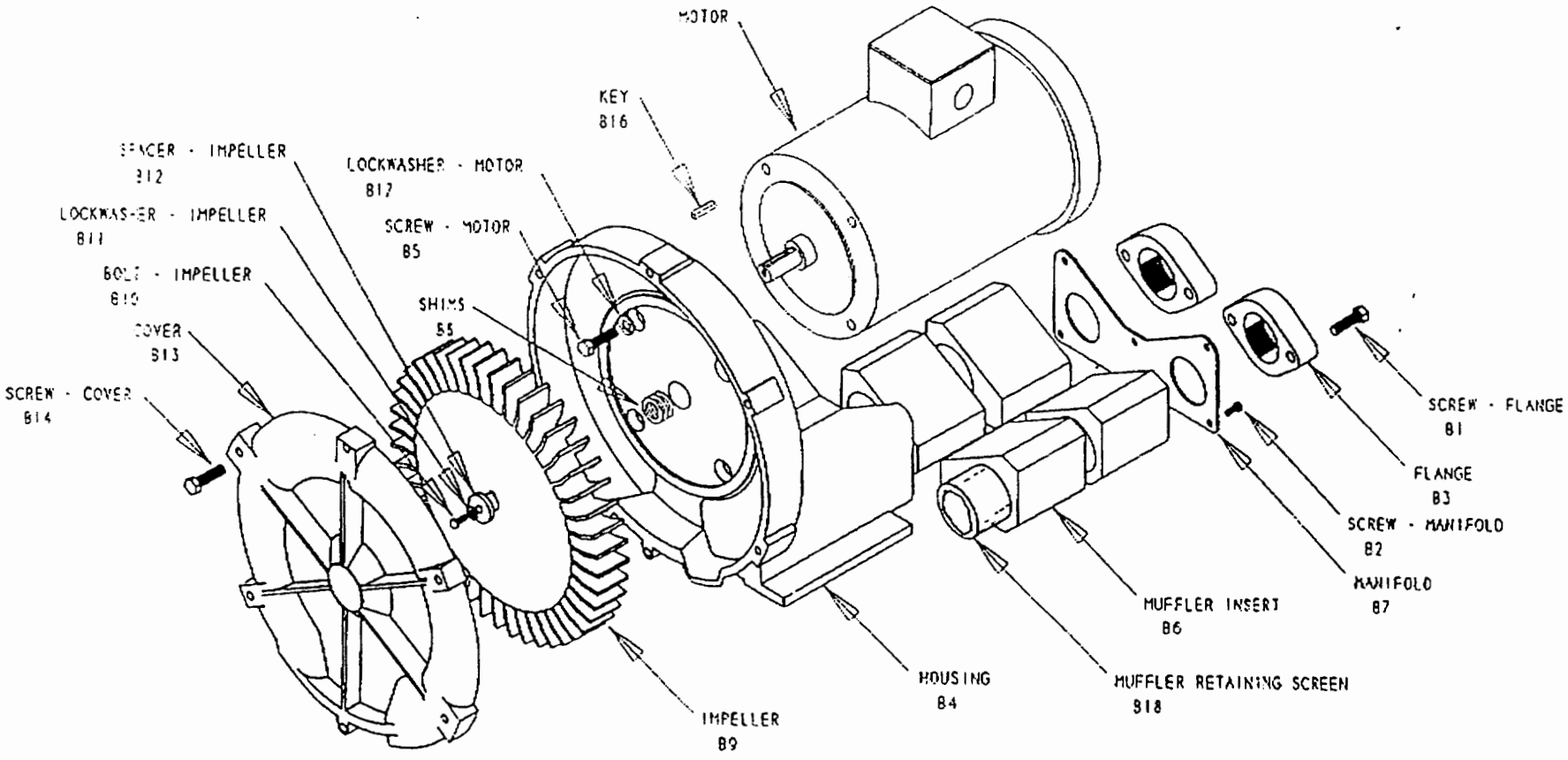

DR 068/083/101/202/303/353
Service and Parts Manual

Parts Breakdown

Item No.	Qty Req'd	Description	DR068DJ9Y 037143	DR068DJ9Y 037326	DR083DC9Y 036862	DR101 036244 036245 036672	DR101 037252	DR202 037066 037067 036373	DR303 036699 036698 037207	DR353 037146 037147 037148
M3	1	Key Motor Shaft	155045	155045	155045	511501	155045	511501	511501	515582
B1	4	Screw, Flange	Not Used	Not Used	Not Used	120325	120325	120262	120162	120162
B2	6	Screw, Manifold	155047	Not Used	120303	120303	120303	120303	120303	120303
B3	2	Flange	Not Used	Not Used	Not Used	515212	515212	510480	510493	510493
B4	1	Housing	515784	516714	515709	510347	516616	510341	510335	516364
B5	4	Screw, Hsg /Motor	155097	155097	155097	120235	155097	120235	120235	120235
B6	4	Muffler Material	515779	(2 pcs)516720	516427	510544	510544	510485	510488	516384
B7	1	Manifold Plate	516373	Not Used	515654	510541	510541	510478	510487	516347
B8	*	Shim .002"	510360	510360	510360	510494	516360	510494	510494	510494
	*	Shim .005"	510361	510361	510361	510495	516361	510495	510495	510495
	*	Shim .010"	510362	510362	510362	510496	516362	510496	510496	510496
	*	Shim .020"	Not Used	Not Used	Not Used	155411	155411	155411	155411	155411
	*	Shim .030"	Not Used	Not Used	Not Used	155412	155412	155412	155412	155412
B9	1	Impeller	516631	516631	515416	510351	516617	510345	510339	516318
B10	1	Bolt, Impeller	155047	155047	155047	120118	120237	120118	120118	120325
B11	1	Lockwasher, Impeller	251690	251690	251690	120203	251690	120203	120203	120203
B12	1	Washer, Impeller	595332	595332	595332	Not Used	Not Used	Not Used	Not Used	Not Used
B13	1	Cover	515778	516718	515698	510349	510349	510343	510337	516329
B14	6	Screw, Cover	(5 pcs)120232	(5 pcs)120231	(5 pcs)120232	120232	120232	120232	120232	(5 pcs)120262
B16	1	Spacer, Impeller Bolt	Not Used	Not Used	Not Used	510355	155115	510355	510355	510355
B17	4	Lockwasher, Housing	140009	140009	140009	120203	140009	120203	120203	120203
B18		Screen, Muffler Retaining, Right (**)	Not Used	Not Used	Not Used	Not Used	Not Used	Not Used	Not Used	Not Used
		Screen, Muffler Retaining, Left (**)	Not Used	Not Used	Not Used	Not Used	Not Used	Not Used	Not Used	Not Used
B19		Bolt, Muffler Hsg/Hsg	Not Used	Not Used	Not Used	Not Used	Not Used	Not Used	Not Used	Not Used
B20		Muffler Housing	Not Used	Not Used	Not Used	Not Used	Not Used	Integral	Integral	Not Used
		Bolt, Motor/Muffler	Not Used	Not Used	Not Used	Not Used	Not Used	Not Used	Not Used	Not Used
		Lockwasher, Motor/Muffler	Not Used	Not Used	Not Used	Not Used	Not Used	Not Used	Not Used	Not Used
		Washer, Motor/Muffler	Not Used	Not Used	Not Used	Not Used	Not Used	Not Used	Not Used	Not Used
		Spacer, Motor/Muffler	Not Used	Not Used	Not Used	Not Used	Not Used	Not Used	Not Used	Not Used

* As needed ** Viewed looking at inlet/outlet ports

Model	Part #	Motor	Wiring Diagram	Specific Parts	Bearing, Rear (M1)	Bearing, Impeller End (M2)
DR068DJ9Y	037143	515729	D		Not Replaceable	Not Replaceable
DR068DJ9Y	037326	515729	D			
DR083DC9Y	036862	515729	D			
DR101DC9	037252	515729	D		Not Replaceable	Not Replaceable
DR101BX9	036244	510498	A		510449	510449
DR101BX72	036245	517356	C			
DR101BX86	036672	515211	G			
DR202Y9	037066	510498	A		510449	510449
DR202Y72	037067	517356	C			
DR202Y86	036373	510933	G			
DR303AE9	036699	517355	A		510449	510449
DR303AE72	036698	517356	C			
DR303AE86	037207	516610	G			
DR353BR86	037146	510934	G		510449	510449
DR353BR9	037147	510499	A			
DR353BR72	037148	510502	C			

* As needed ** Viewed looking at inlet/outlet ports

Warranty Information

1. **No-Fault Policy.** EG&G Rotron regenerative direct drive blowers are guaranteed up to one full year from the date of purchase to the original purchaser only. Should the blower fail, **regardless of the cause of failure,** we will at our option repair or replace the blower.

2. **Standard Policy.** EG&G Rotron remote drives, Nasty Gas™ models and special built (EO) products are guaranteed up to one full year from date of purchase for workmanship and material defect to the original purchaser only. Should the blower fail, we will evaluate the failure. If determined to be workmanship or material defect, we will at our option repair or replace the blower.

3. **Modified Policy.** EG&G Rotron packaged units, Vacu-Master models and moisture separators are guaranteed up to one full year from date of purchase for workmanship and material defect to the original purchaser only on all parts excluding maintenance/wear items such as belts and bags. Should the blower fail, we will evaluate the failure. If determined to be workmanship or material defect, we will at our option repair or replace the blower.

4. **Parts Policy.** EG&G Rotron spare parts and accessories are guaranteed up to three months from date of purchase for workmanship and material defect to the original purchaser only. Should the part fail, we will at our option repair or replace the part.

Corrective Action. A written report will be provided indicating reason(s) for failure, with suggestions for corrective action. If the failure is determined to be a defect in material or workmanship, Rotron will institute a corrective action. Subsequent customer failures due to abuse, misuse, misapplication or repeat offense will not be covered. EG&G Rotron will then notify you of your options. Any failed unit that is tampered with by attempting repair or diagnosis will void the warranty, unless authorized by the factory.

Terms and Conditions. Our warranty covers repairs or replacement of regenerative blowers only, and will not cover labor for installation, shipping costs, accessories or other items not considered integral blower parts. Charges may be incurred on products returned for reasons other than failures covered by their appropriate warranty. Maximum liability will in no case exceed the value of the product purchased. Other terms and conditions of sale are stated on the back of the order acknowledgment.

Installation

1. **Bolt It Down.** Any blower must be secured against movement prior to starting or testing to prevent injury or damage. The blower does not vibrate much more than a standard electric motor.

2. **Filtration.** All blowers should be filtered prior to starting. Care must be taken so that no foreign material enters the blower. If foreign material does enter the blower, it could cause internal damage or may exit at extremely high velocity.

   Should excessive amounts of material pass through the blower, it is suggested that the cover(s) and impeller(s) be removed periodically and cleaned to avoid impeller imbalance. Impeller imbalance greatly speeds bearing wear, thus reducing blower life. Disassembling the blower will void warranty, so contact the factory for cleaning authorization.

3. **Support the Piping.** The blower flanges and nozzles are designed as connection points only and are not designed to be support members.

   Caution: Plastic piping should not be used on blowers larger than 1 HP that are operating near their maximum pressure or suction point. Blower housing and nearby piping temperatures can exceed 200° Fahrenheit. Access by personnel to the housing or nearby piping should be limited, guarded, or marked, to prevent danger of burns.

4. **Wiring.** Blowers must be wired and protected/fused in accordance with local and national electrical codes. All blowers must be grounded to prevent electrical shock. Slo-Blo or time delay fuses should be used to bypass the first second of start-up amperage.

5. **Pressure/Suction Maximums.** The maximum pressure and/or suction listed on the model label should not be exceeded. This can be monitored by means of a pressure or suction gage (available from Rotron), installed in the piping at the blower outlet or inlet. Also, if problems do arise, the Rotron Application Engineering staff will need to know the operating pressure/suction to properly diagnose the problem.

6. **Excess Air.** Bleed excess air off. DO NOT throttle to reduce flow. When bleeding off excess air, the blower draws less power and runs cooler.

   Note: Remote Drive (Motorless) Blowers - Properly designed and installed guards should be used on all belts, pulleys, couplings, etc. Observe maximum remote drive speed allowable. Due to the range of uses, drive guards are the responsibility of the customer or user. Belts should be tensioned using belt gauge.

Maintenance Procedure

When properly piped, filtered, and applied, little or no routine maintenance is required. Keep the filter clean. Also, all models in the DR, EN, CP, and HiE series have sealed bearings which require no maintenance. Bearings should be changed after 15,000 to 20,000 hours, on average. Shell Dolium R grease is used at the factory. Replacement bearings should contain Shell Dolium R or its equivalent.

Troubleshooting

		POSSIBLE CAUSE	OUT OF WARRANTY REMEDY ***
IMPELLER DOES NOT TURN	Humming Sound	1. * One phase of power line not connected 2. * One phase of stator winding open 3. Bearings defective 4. Impeller jammed by foreign material 5. Impeller jammed against housing or cover 6. ** Capacitor open	1. Connect 2. Rewind or buy new motor 3. Change bearings 4. Clean and add filter 5. Adjust 6. Change capacitor
	No Sound	1. * Two phases of power line not connected 2. * Two phases of stator winding open	1. Connect 2. Rewind or buy new motor
IMPELLER TURNS	Blown Fuse	1. Insufficient fuse capacity 2. Short circuit	1. Use time delay fuse of proper rating 2. Repair
	Motor Overheated Or Protector Trips	1. High or low voltage 2. * Operating in single phase condition 3. Bearings defective 4. Impeller rubbing against housing or cover 5. Impeller or air passage clogged by foreign material 6. Unit operating beyond performance range 7. Capacitor shorted 8. * One phase of stator winding short circuited	1. Check input voltage 2. Check connections 3. Change bearings 4. Adjust 5. Clean and add filter 6. Reduce system pressure/vacuum 7. Change capacitor 8. Rewind or buy new motor
	Abnormal Sound	1. Impeller rubbing against housing or cover 2. Impeller or air passages clogged by foreign material 3. Bearings defective	1. Adjust 2. Clean and add filter 3. Change bearings
	Performance Below Standard	1. Leak in piping 2. Piping and air passages clogged 3. Impeller rotation reversed 4. Leak in blower 5. Low voltage	1. Tighten 2. Clean 3. Check wiring 4. Tighten cover, flange 5. Check input voltage

* 3 phase units
** 1 phase units
*** Disassembly and repair of new blowers or motors will void the Rotron warranty. Factory should be contacted prior to any attempt to field repair an in-warranty unit.

Blower Disassembly

Refer to assembly diagram (Appendix 2) for referenced part designations. **CAUTION: Be sure power is disconnected before doing any work on units.**

1. Disconnect power leads.
2. Remove or separate piping and/or mufflers from unit.
3. Remove cover bolts (B14) and then cover (B13).
4. Remove impeller bolt (B10) and washers and then remove impeller. **Note:** Never pry on the edges of the impeller. Use puller, if necessary.
5. Carefully note number and location of shims (B8). Remove and set aside. **Note:** If disassembly was for inspection or cleaning purposes, unit may now be reassembled by reversing the above steps. If motor servicing, replacement, or impeller replacement is required, the same shims may not be re-used. It will be necessary to re-shim according to the procedure shown under Assembly.
6. Remove housing bolts (B5) and remove motor assembly.

*Muffler Material Replacement**

1. Remove manifold cover bolts (B2) and manifold cover (B7).
2. Muffler assembly can now be removed and replaced if necessary. On larger blowers with fiberglass acoustical material, wrap the tubular retaining screens with fiberglass matting before sliding the pads over the screens.
3. Reassemble by reversing procedure.

* Note: On DR068 models with tubular mufflers, it is necessary to remove cover and impeller, accessing muffler material from the housing cavity.

Bearing Selection

All bearings used in EG&G Rotron blowers are of the double sealed variety. In addition, high temperature greases are used to prevent loss of lubrication under severe operating conditions. Select the appropriate bearings by referencing the parts list if ordering from EG&G Rotron, or the parts list and the accompanying chart.

BEARING TYPES AND LUBRICANTS

All Rotron regenerative blowers supplied with direct fitted motors are designed with ABEC1 quality double sealed ball bearings in the motor. The bearing design in all cases is a C3 fit. Below is our recommended chart by bearing part number.

Part No.	Size	Seal Material	Grease	Heat Stabilized
510217 510218 510219	205 206 207	Polyacrylic	Nye Rheotemp 500 30% ± 5% fill	Yes - 325°F
510449 516440 516648	203 202 307	(Buna N)	Shell Dolium "R" 25-40% fill	No
516840 516841 516842 516843 516844 516845 516846 516847	206 207 208 210 309 310 311 313	(Buna N)	Shell Dolium "R" 30% ± 5% fill	No

Blower Reassembly

1. Place assembled motor against rear of housing (B4) and fasten with bolts (B5).
2. To ensure impeller is centered within housing cavity, reshim impeller according to the procedure outlined below.
3. Place impeller onto shaft (be sure key is in place) and fasten with bolt (B10), washer (B11 & B12), and spacer (B16) if applicable. TORQUE impeller bolt per table below. Once fastened, spin impeller to be sure it turns freely.
4. Replace cover and fasten with bolts (B14).
5. Reconnect power leads per motor nameplate.

Bolt Size	Torque
1/4 - 20	6.25 +/- .25
5/16 - 18	11.50 +/- .25
3/8 - 16	20.0 +/- .5
1/2 - 13	49.0 +/- 1
5/8 - 11	90.0 +/- 2

Impeller Shimming Procedure

Tools needed: Machinist's Parallel Bar
Vernier Caliper with depth measuring capability
Feeler Gauges or Depth Gauge

Measure the following:

- Distance from the flange face to the housing (A)
- Distance from the flange face to the motor shaft shoulder (B)
- Impeller thickness (C)

Measurements (A) and (B) are made by laying the parallel bar across the housing flange face and measuring to the proper points. Each measurement should be made at three points, and the average of the readings used.

$$\text{Shim Thickness} = B - \left(\frac{A+C}{2}\right)$$
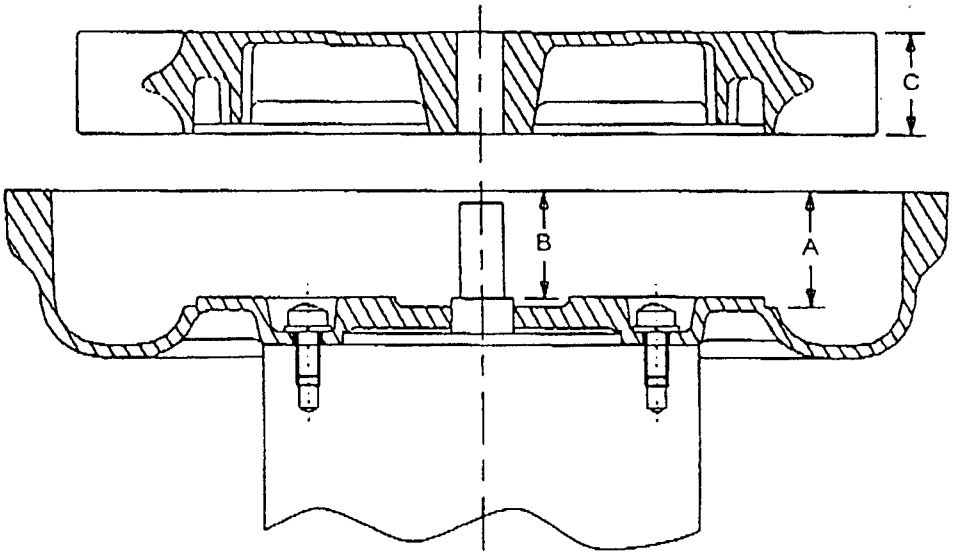
After impeller installation (step 3 above), the impeller/cover clearance can be checked with feeler gauges, laying the parallel bar across the housing flange face. This clearance should nominally be $\left(\frac{A-C}{2}\right)$.