HAFB04

DEPARTMENT OF THE AIR FORCE
HEADQUARTERS 49TH FIGHTER WING (ACC)
HOLLOMAN AIR FORCE BASE, NEW MEXICO

AUG 30 2006

Colonel David L. Goldfein
Commander, 49th Fighter Wing
490 First Street, Suite 1700
Holloman AFB NM 88330-8277

RECEIVED
AUG 2006
NMED Hazardous Waste Bureau

Mr. James Bearzi
New Mexico Environment Department
Chief, Hazardous Waste Bureau
2905 Rodeo Park Drive East, Building 1
Santa Fe NM 87505-6313

Dear Mr. Bearzi

Enclosed for your review is the Holloman AFB 20,000-Pound Open Detonation Treatment Unit Permit Renewal Application (Subpart X), EPA ID No. 6572124422.

If you have any question or require additional information, please contact Darvin St John of our Environmental Flight at (505) 572-3931.

DAVID L. GOLDFEIN
FOR Colonel, USAF
Commander

Enclosure
20,000-Pound Open Detonation Treatment Unit Permit Renewal Application (Binder)

cc: w/Enclosure:

Mr. Cornelius Amindyas
New Mexico Environment Department
Hazardous Waste Bureau
5500 San Antonio Drive NE
Albuquerque NM 87109

RCRA PERMIT RENEWAL APPLICATION
20,000 POUND OPEN DETONATION (OD) TREATMENT UNIT
UNITED STATES DEPARTMENT OF THE AIR FORCE
HOLLOMAN AIR FORCE BASE
OTERO COUNTY, NEW MEXICO

Includes:

Holloman Air Force Base
Part A and Part B
RCRA Permit Renewal Application
20,000 Pound OD Treatment Unit

Submitted to:
New Mexico Environment Department
Hazardous Waste Bureau
2044 Galisteo Street
P.O. Box 26110
Santa Fe, New Mexico 87502

Submitted by:

49 CES/CEV
550 Tabosa Avenue
Holloman AFB
New Mexico, 88330

Revision 0.0

TABLE OF CONTENTS

Section/Attachment **Page**

PART A RCRA PERMIT RENEWAL APPLICATION 20,000 POUND OD TREATMENT UNIT

PART B RCRA PERMIT RENEWAL APPLICATION 20,000 POUND OD TREATMENT UNIT

1.0 Certification 1

A FACILITY DESCRIPTION A-1

A.1 GENERAL DESCRIPTION [20.4.1.900 NMAC §270.14(b)(1)] A-1

A.2 TRAFFIC INFORMATION [20.4.1.900 NMAC §270.14(B)(10)] A-4

A.2.1 ROUTES OF TRAVEL AND TRAFFIC VOLUME A-4

A.2.2 ACCESS ROAD SURFACE AND LOAD BEARING CAPACITY A-7

A.3 LOCATION INFORMATION [20.4.1.900 NMAC §270.14(b)(11)] A-7

A.3.1 SEISMIC STANDARD [20.4.1.900 NMAC §§270.14(b)(11) (i and ii) and 20.4.1.500 NMAC §264.18(a)] A-7

A.3.2 FLOODPLAIN STANDARD [20.4.1.900 NMAC §270.14(b)(11)(iii), (iv), and (v); §270.14(b)(19)(ii); and 20.4.1.500 NMAC §264.18(b)] A-7

A.4 TOPOGRAPHIC MAPS [20.4.1.900 NMAC §270.14(b)(19) A-7

A.5 ADDITIONAL INFORMATION REQUIREMENTS [20.4.1.900 NMAC §270.14(c)] A-18

B WASTE ANALYSIS PLAN B-1

INTRODUCTION B-1

B.1 WASTE CLASSIFICATION AND IDENTIFICATION B-1

B.2 WASTE CHARACTERISTICS B-5

B.3 WASTE ANALYSIS RATIONALE B-10

B.4 SUMMARY OF ANALYTICAL METHODS AND SAMPLING FREQUENCY B-14

C INSPECTION SCHEDULE C-1

INTRODUCTION C-1

C.1 INSPECTION SCHEDULE C-1

C.1.1 TYPES OF PROBLEMS [20.4.1.500 NMAC §264.15 (b)(3)] C-2

C.1.2 FREQUENCY OF INSPECTION [20.4.1.500 NMAC §264.15(b)(4)] C-2

C.1.3 REMEDIAL ACTION [20.4.1.500 NMAC §264.15(d)] C-2

C.1.4 INSPECTION LOG C-2

TABLE OF CONTENTS (Continued)

D PERSONNEL TRAINING D-1
INTRODUCTION D-1
D.1 TRAINING PROGRAM D-1
D.1.1 JOB TITLE/JOB DESCRIPTION D-1
D.1.2 TRAINING PROGRAM CONTENT AND FREQUENCY D-1
D.1.3 TRAINING SUPERINTENDENT D-2
D.1.4 JOB TITLES AND DUTIES [20.4.1.500 NMAC §264.16 (d)(2)] D-2
D.1.5 RELEVANCE OF TRAINING TO JOB POSITION D-3
D.1.6 IMPLEMENTATION OF THE TRAINING PROGRAM D-3
E CONTINGENCY PLAN E-1
E.1 INTRODUCTION E-1
E.1.1 PURPOSE AND IMPLEMENTATION E-1
E.1.2 OD UNIT OPERATIONS E-1
E.1.3 COORDINATION AGREEMENTS E-2
E.1.4 EMERGENCY COORDINATORS E-2
E.1.5 IMPLEMENTATION OF THE CONTINGENCY PLAN E-3
E.1.5.1 Emergency Response Procedures [20.4.1.500 NMAC §264.56] E-3
E.1.6 EMERGENCY RESPONSE EQUIPMENT [20.4.1.500 NMAC §264.32] E-4
E.1.7 POST EMERGENCY REPORTS [20.4.1.500 NMAC §264.56(j)] E-4
E.2 CONTINGENCY RESPONSE PLAN E-5
E.2.1 GENERAL INFORMATION E-5
E.2.2 EMERGENCY COORDINATORS E-5
E.2.3 IMPLEMENTATION E-6
E.2.4 EMERGENCY RESPONSE PROCEDURES E-7
E.2.4.1 Notification E-7
E.2.4.2 Identification of Hazardous Wastes E-7
E.2.4.3 Hazard Assessment E-8
E.2.4.4 Control Procedures E-8
E.2.4.5 Prevention of Recurrence or Spread of Fires, Explosions, or Releases E-9
E.2.4.6 Storage and Treatment of Released Material E-9
E.2.4.7 Post-Emergency Equipment Maintenance E-9
E.2.4.8 Container Spills and Leakage E-10
E.2.4.9 Emergency Equipment E-10
E.2.4.10 Coordination Requirements E-10
E.2.4.11 Evacuation Plan E-11

TABLE OF CONTENTS (Continued)

E.2.4.12 Required Reports E-11
F 20,000-POUND OPEN DETONATION UNIT MANAGEMENT F-1
INTRODUCTION F-1
F.1 OPERATIONAL PROCEDURES AND WASTE MANAGEMENT PRACTICES F-1
F.1.1 LOADING/UNLOADING OPERATIONS F-1
F.1.2 TRANSPORTATION OF EXPLOSIVE WASTES TO THE OD UNIT F-2
F.1.3 TREATMENT PROCESS F-2
F.1.4 OPERATING PRACTICES F-2
F.1.4.1 Explosive Open Detonation Treatment F-4
F.1.4.2 Standard Operating Practices F-4
F.1.5 WASTE STAGING F-4
F.1.6 IGNITABLE, REACTIVE AND INCOMPATIBLE WASTES F-4
F.1.7 SECURITY AND ACCESS F-5
F.1.7.1 Security [20.4.1.500 NMAC §264.14(b)(1)] F-5
F.1.7.2 Barrier and Means to Control Entry [20.4.1.500 NMAC §264.14(b)(2)(i) and (ii)] F-5
F.1.7.3 Warning Signs [20.4.1.500 NMAC §264.14(c)] F-6
F.1.8 PREPAREDNESS AND PREVENTION [20.4.1.500 NMAC PART 264 SUBPART C] F-6
F.1.8.1 Required Equipment [20.4.1.500 NMAC §264.32] F-6
F.1.8.2 Internal Communications [20.4.1.500 NMAC §264.32(a)] F-6
F.1.8.3 External Communications [20.4.1.500 NMAC §264.32(b)] F-6
F.1.8.4 Emergency Equipment [20.4.1.500 NMAC §264.32(c)] F-6
F.1.8.5 Water for Fire Control [20.4.1.500 NMAC §264.32(d)] F-7
F.1.8.6 Testing and Maintenance of Equipment [20.4.1.500 NMAC §264.33] F-7
F.1.8.7 Access to Communication or Alarm Systems [20.4.1.500 NMAC §264.34] F-7
F.1.8.8 Aisle Space Requirements [20.4.1.500 NMAC §264.35] F-7
F.1.8.9 Support Agreements with Outside Agencies [20.4.1.500 NMAC §264.35] F-7
F.1.8.10 Preventive Procedures, Structures, and Equipment [20.4.1.900 NMAC §270.14(b)(8)] F-7
F.1.9 Operating Record F-8
F.1.9.1 Additional Reports F-8
F.1.9.2 Biennial Report F-8
G CLOSURE AND POST-CLOSURE PLAN G-1
INTRODUCTION G-1
G.1 CLOSURE PERFORMANCE STANDARD G-1

TABLE OF CONTENTS (Continued)

G.2 SUMMARY OF SAMPLING ACTIVITIES CONDUCTED DURING ACTIVE LIFE G-1
G.3 SUMMARY OF CLOSURE ACTIVITIES G-2
G.3.1 FINAL CLOSURE ACTIVITIES G-2
G.3.2 PARTIAL CLOSURE ACTIVITIES G-2
G.3.3 MAXIMUM WASTE INVENTORY G-2
G.3.4 SCHEDULE FOR CLOSURE G-2
G.3.5 AMENDMENT OF THE CLOSURE PLAN G-3
G.3.6 CLOSURE AND POST-CLOSURE COST ESTIMATE, FINANCIAL ASSURANCE, AND LIABILITY REQUIREMENTS G-3
G.4 CLOSURE PROCEDURES G-3
G.4.1 SITE RECONNAISSANCE G-4
G.4.2 REMOVAL, DISPOSAL, AND DECONTAMINATION OF EQUIPMENT G-4
G.4.3 SOIL SAMPLING AND ANALYSIS G-4
G.4.4 BACKGROUND COMPARISON AND RISK-BASED SCREENING G-5
G.4.5 CORRECTIVE ACTION G-5
G.4.6 SITE RESTORATION G-6
G.4.7 CLOSURE REPORT G-6
G.4.8 CONTINGENT POST-CLOSURE PLAN G-6
G.4.8.1 Post-Closure Care and Use of Property G-6
G.4.8.2 Post-Closure Care Period G-7
G.4.9 Closure Certification G-7
G.4.9.1 Post-Closure Security G-7
G.4.9.2 Post-Closure Use of Property G-8
G.4.9.3 Post-Closure Care Plan and Ground Water Monitoring G-8
G.4.9.4 Post-Closure Maintenance Requirements G-8
G.4.9.5 Certification of Post-Closure Care G-8
G.4.9.6 Survey Plat and Post-Closure Notices G-8
H SAMPLING AND ANALYSIS PLAN H-1
H.1 INTRODUCTION H-1
H.1.1 SITE DESCRIPTION H-1
H.2 BACKGROUND SAMPLING H-1
H.3 SUMMARY OF HISTORIC SAMPLING DATA H-2
H.4 SAMPLING AND ANALYTICAL PROCEDURES H-3
H.4.1 SAMPLING LOCATIONS H-3
H.4.2 SAMPLING FREQUENCY H-4
H.4.3 SAMPLE COLLECTION H-4
H.4.3.1 Sampling Personnel H-6

TABLE OF CONTENTS (Continued)

H.4.3.2 Sample Collection H-6
H.4.3.3 Contamination Control Procedures H-6
H.4.3.4 Health and Safety Procedures H-7
H.4.3.5 Chain-Of-Custody Procedures H-7
H.4.3.6 Sample Container and Preservation Requirements H-7
H.4.3.7 Packaging And Transportation H-7
H.4.3.8 Documentation of Sampling and Analysis Activities H-8
H.4.3.9 Field Sampling and Unit Operation Logbooks H-9
H.4.4 LABORATORY ANALYSIS H-10
H.4.4.1 Quality Control Samples for Annual Post-Detonation Soil Sampling H-11
H.4.4.2 QA/QC Protocols H-11
H.4.4.3 Sample Return or Disposal H-11
H.4.5 CLOSURE SAMPLING H-12
H.4.5 DATA EVALUATION METHODS H-12
H.4.5.1 Action Level Determination H-12
H.4.5.2 Comparison of Sampling Results to Decision Criteria H-12
H.4.5.3 Data Resolution and Remedial Response H-13
H.5 REFERENCES H-14
I ENVIRONMENTAL PROTECTION I-1
INTRODUCTION I-1
I.1 SITE CHARACTERISTICS I-1
I.1.1 GEOLOGY I-2
I.1.1.1 Soils I-2
I.1.2 HYDROLOGY I-4
I.1.2.1 Surface Water I-4
I.1.2.2 Water Balance I-6
I.1.2.3 Unsaturated Zone Soil Characteristics I-6
I.1.2.4 Depth to the Uppermost Saturated Zone I-6
I.1.2.5 Saturated Zone Characteristics I-6
I.1.2.6 Existing Groundwater Quality I-7
I.1.2.7 Groundwater Direction and Flow Rate I-8
I.1.2.8 Proximity to Groundwater Withdrawal Points I-8
I.1.3 WETLANDS I-9
I.1.4 METEOROLOGICAL CHARACTERISTICS I-9
I.1.5 AIR QUALITY I-10
I.1.6 VEGETATION AND WILDLIFE I-10
I.1.6.1 Flora I-10
I.1.6.2 Fauna I-12
I.1.7 THREATENED AND ENDANGERED AND SPECIAL STATUS SPECIES I-16
I.2 EXPOSURE PATHWAYS AND RECEPTORS I-21

TABLE OF CONTENTS (Continued)

I.3 ENVIRONMENTAL PERFORMANCE STANDARDS I-21
I.3.1 PROCEDURES TO PREVENT EXPOSURE I-21
I.3.2 PROTECTION OF GROUNDWATER I-22
I.3.3 PROTECTION OF SURFACE WATER, WETLANDS AND SOIL SURFACE I-23
I.3.4 PROTECTION OF THE ATMOSPHERE I-24
I.3.5 MONITORING, INSPECTION, AND REPORTING I-26
I.3.5.1 Monitoring I-26
I.3.5.2 Inspection I-26
I.3.5.3 Recordkeeping and Reporting I-27
I.4 REFERENCES I-27
J AIR QUALITY DISPERSION MODELING ANALYSIS J-1
J.1 INTRODUCTION J-1
J.2 DESCRIPTION OF AIR QUALITY MODELS USED J-1
J.3 SOURCE CHARACTERISTICS J-2
J.4 MODEL OPTIONS J-2
J.5 TOPOGRAPHIC SETTING J-2
J.6 LAND USE DETERMINATION AND DISPERSION COEFFICIENTS J-3
J.7 RECEPTOR GRID SELECTION J-3
J.8 METEOROLOGICAL DATA J-3
J.9 BACKGROUND J-3
J.10 SUMMARY OF AIR QUALITY MODELING RESULTS J-4

LIST OF FIGURES

Figure		Page
A-1	General Location of Holloman Air Force Base	A-2
A-2	Facility Layout of Holloman Air Force Base	A-3
A-3	20,000-Pound OD Unit Layout	A-5
A-4	Detailed Drawing of the 20,000-Pound Open Detonation Unit	A-6
A-5	Holloman Air Force Base Floodplains	A-8
A-6	Topographic Map of the 20,000-Pound OD Unit	A-9
A-7	Frequency (%) of Wind Speed by Direction – 2001	A-11
A-8	Frequency (%) of Wind Speed by Direction – 2002	A-12
A-9	Frequency (%) of Wind Speed by Direction – 2003	A-13
A-10	Frequency (%) of Wind Speed by Direction – 2004	A-14
A-11	Frequency (%) of Wind Speed by Direction – 2005	A-15
A-12	Location of the 20,000-Pound OD Unit and Surrounding Area	A-16
A-13	Location of 20,000-Pound OD Unit in Relation to SWMU, IRP Sites, and DRMO at Holloman Air Force Base	A-17
H-1	Cross-Sectional View of OD Unit and Strata	H-5
I-1	Generalized Geologic Cross Section of the Tularosa Basin	I-2
I-2	Geologic Cross Section of the OD Unit Area (After Labat-Anderson, 1993)	I-3
I-3	Potentiometric Groundwater Surface Map at the OD Unit (after Labat-Anderson, 1993)	I-7
J-1	Land Use Three Kilometers Surrounding Facility	J-3

LIST OF TABLES

Table		Page
B-1	Standard Compositions (%) for Single - or Double-Base Propellants	B-4
B-2	Explosive Compounds Used or Treated at the OD Unit	B-6
B-3	Composition of Specific Propellants Thermally Treated at the OD Unit (also included is the RDX detonator)	B-11
B-4	Characteristics of Constituents in Propellants or Explosives Thermally Treated at the OD Unit	B-12
C-1	General Inspection Schedule and Checklist	C-3
D-1	EOD Training Program Outline	D-4
D-2	Hazardous Waste Training Outline	D-11
G-1	Estimated Closure Schedule for the 20,000-Pound OD Unit	G-9
G-2	Required Maintenance Activities and Schedule	G-10
H-1	Site-Specific Background Levels, 20,000-Pound Open Detonation Unit Holloman Air Force Base	H-2
H-2	Analytical Methods for Soil Samples	H-3
H-3	QC Sample Requirements	H-8
H-4	Summary of Sample Container, Preservative, and Holding Time Requirements for Soil Samples	H-8
I-1	Generalized Geologic (Soil Boring) Log[1]	I-2
I-2	Summary of Results 20,000-Pound OD Unit Investigation	I-5
I-3	Threatened and Endangered Species in Vicinity of Holloman	I-10
J-1	Background Values (µg/m3)	J-4
J-2	OBODM Modeling Results from Open Detonation Unit[a] Holloman AFB, New Mexico	J-6

PART A
RCRA PERMIT RENEWAL APPLICATION
20,000 POUND OPEN DETONATION (OD) TREATMENT UNIT
UNITED STATES DEPARTMENT OF THE AIR FORCE
HOLLOMAN AIR FORCE BASE
OTERO COUNTY, NEW MEXICO

Revision 0.0

United States
Environmental Protection
Agency

March 2005

RCRA Hazardous Waste Part A Permit Application

EPA Form 8700-23

RCRA PERMIT RENEWAL APPLICATION

20,000-POUND OPEN DETONATION (OD) TREATMENT UNIT
UNITED STATES DEPARTMENT OF THE AIR FORCE
HOLLOMAN AIR FORCE BASE
OTERO COUNTY, NEW MEXICO

EPA ID NO. NM 6572 124422

9. Legal Owner (Continued) Address	Street or P. O. Box: 490 First Street, Suite 1700	
	City, Town, or Village: Holloman AFB	
	State: New Mexico	
	Country: USA	Zip Code: 88330-8277

10. Type of Regulated Waste Activity
Mark "Yes" or "No" for all activities; complete any additional boxes as instructed. (See instructions on pages 18 to 21.)

A. Hazardous Waste Activities
Complete all parts for 1 through 6.

Y ☑ N ☐ **1. Generator of Hazardous Waste**
If "Yes", choose only one of the following - a, b, or c.

☑ a. LQG: Greater than 1,000 kg/mo (2,200 lbs./mo.) of non-acute hazardous waste; or

☐ b. SQG: 100 to 1,000 kg/mo (220 - 2,200 lbs./mo.) of non-acute hazardous waste; or

☐ c. CESQG: Less than 100 kg/mo (220 lbs./mo.) of non-acute hazardous waste

In addition, indicate other generator activities.

Y ☐ N ☑ d. United States Importer of Hazardous Waste

Y ☐ N ☑ e. Mixed Waste (hazardous and radioactive) Generator

Y ☐ N ☑ **2. Transporter of Hazardous Waste**

Y ☑ N ☐ **3. Treater, Storer, or Disposer of Hazardous Waste (at your site)** Note: A hazardous waste permit is required for this activity.

Y ☐ N ☑ **4. Recycler of Hazardous Waste (at your site)**

Y ☐ N ☑ **5. Exempt Boiler and/or Industrial Furnace**
If "Yes", mark each that applies.
☐ a. Small Quantity On-site Burner Exemption
☐ b. Smelting, Melting, and Refining Furnace Exemption

Y ☐ N ☑ **6. Underground Injection Control**

B. Universal Waste Activities

Y ☐ N ☑ **1. Large Quantity Handler of Universal Waste (accumulate 5,000 kg or more) [refer to your State regulations to determine what is regulated]. Indicate types of universal waste generated and/or accumulated at your site. If "Yes", mark all boxes that apply:**

	Generate	Accumulate
a. Batteries	☐	☐
b. Pesticides	☐	☐
c. Thermostats	☐	☐
d. Lamps	☐	☐
e. Other (specify) _____	☐	☐
f. Other (specify) _____	☐	☐
g. Other (specify) _____	☐	☐

Y ☐ N ☑ **2. Destination Facility for Universal Waste**
Note: A hazardous waste permit may be required for this activity.

C. Used Oil Activities
Mark all boxes that apply.

Y ☐ N ☑ **1. Used Oil Transporter**
If "Yes", mark each that applies.
☐ a. Transporter
☐ b. Transfer Facility

Y ☐ N ☑ **2. Used Oil Processor and/or Re-refiner**
If "Yes", mark each that applies.
☐ a. Processor
☐ b. Re-refiner

Y ☐ N ☑ **3. Off-Specification Used Oil Burner**

Y ☐ N ☑ **4. Used Oil Fuel Marketer**
If "Yes", mark each that applies.
☐ a. Marketer Who Directs Shipment of Off-Specification Used Oil to Off-Specification Used Oil Burner
☐ b. Marketer Who First Claims the Used Oil Meets the Specifications

11. Description of Hazardous Wastes (See instructions on page 22.)

A. Waste Codes for Federally Regulated Hazardous Wastes. Please list the waste codes of the Federal hazardous wastes handled at your site. List them in the order they are presented in the regulations (e.g., D001, D003, F007, U112). Use an additional page if more spaces are needed.

D003						

B. Waste Codes for State-Regulated (i.e., non-Federal) Hazardous Wastes. Please list the waste codes of the State-regulated hazardous wastes handled at your site. List them in the order they are presented in the regulations. Use an additional page if more spaces are needed for waste codes.

12. Comments (See instructions on page 22.)

13. Certification. I certify under penalty of law that this document and all attachments were prepared under my direction or supervision in accordance with a system designed to assure that qualified personnel properly gather and evaluate the information submitted. Based on my inquiry of the person or persons who manage the system, or those persons directly responsible for gathering the information, the information submitted is, to the best of my knowledge and belief, true, accurate, and complete. I am aware that there are significant penalties for submitting false information, including the possibility of fine and imprisonment for knowing violations.
For the RCRA Hazardous Waste Part A Permit Application, all operator(s) and owner(s) must sign (see 40 CFR 270.10 (b) and 270.11). **(See instructions on page 22.)**

Signature of operator, owner, or an authorized representative	Name and Official Title (type or print)	Date Signed (mm/dd/yyyy)
for	David L. Goldfein, Col, USAF, Commander	08/29/2006

THIS PAGE INTENTIONALLY LEFT BLANK

EPA ID NO: N M 6 5 7 2 1 2 4 4 2 2

OMB #: 2050-0034 Expires 11/30/2005

United States Environmental Protection Agency

HAZARDOUS WASTE PERMIT INFORMATION FORM

1. Facility Permit Contact (See instructions on page 23)	**First Name:** Deborah	**MI:** J.	**Last Name:** Hartell
	Phone Number: 505-572-3931		**Phone Number Extension:** deborah.hartell@holloman.af.mil
2. Facility Permit Contact Mailing Address (See instructions on page 23)	**Street or P.O. Box:** 49 CES/CEV 550 Tabosa Avenue		
	City, Town, or Village: Holloman AFB		
	State: NM		
	Country: USA		**Zip Code:** 88330-8277
3. Operator Mailing Address and Telephone Number (See instructions on page 23)	**Street or P.O. Box:** 49th Fighter Wing, 490 First Street, Suite 1700		
	City, Town, or Village: Holloman AFB		
	State: NM		
	Country: USA	**Zip Code:** 88330-8277	**Phone Number** 505-572-5571
4. Legal Owner Mailing Address and Telephone Number (See instructions on page 23)	**Street or P.O. Box:** 49th Fighter Wing, 490 First Street, Suite 1700		
	City, Town, or Village: Holloman AFB		
	State: NM		
	Country: USA	**Zip Code:** 88330-8277	**Phone Number** 505-572-5571
5. Facility Existence Date (See instructions on page 24)	**Facility Existence Date (mm/dd/yyyy):** 02/28/1981		

6. Other Environmental Permits (See instructions on page 24)

A. Permit Type *(Enter code)*	B. Permit Number	C. Description
R	N M 6 5 7 2 1 2 4 4 2 2 -1	TSDF/DRMO
P	P S D - N M - 1 5 0 8 M 1	PSD Clean Air Act
N	N M 0 0 2 9 9 7 1	NPDES Wastewater

7. Nature of Business (Provide a brief description; see instructions on page 24)

Holloman Air Force Base is headquarters to the Air Combat-Command 49th Fighter Wing which supports national security objectives with F-117 Stealth fighters, medical, and war readiness assets ready to rapidly mobilize and deploy worldwide to meet peacetime and wartime contingencies. The base support over 19000 personnel, several tenants, contractors, and others. As a result of the above stated organizations and their activities, certain processes require the open detonation of waste munitions.

THIS PAGE INTENTIONALLY LEFT BLANK

Process Codes and Design Capacities (See instructions on page 24) - Enter information in the Sections on Form Page 3.

A. PROCESS CODE - *Enter the code from the list of process codes in the table below that best describes each process to be used at the facility. Fifteen lines are provided for entering codes. If more lines are needed, attach a separate sheet of paper with the additional information. For "other" processes (i.e., D99, S99, T04 and X99), enter the process information in Item 9 (including a description).*

B. PROCESS DESIGN CAPACITY- *For each code entered in Section A, enter the capacity of the process.*

1. AMOUNT - *Enter the amount. In a case where design capacity is not applicable (such as in a closure/post-closure or enforcement action) enter the total amount of waste for that process.*
2. UNIT OF MEASURE - *For each amount entered in Section B(1), enter the code in Section B(2) from the list of unit of measure codes below that describes the unit of measure used. Select only from the units of measure in this list.*

C. PROCESS TOTAL NUMBER OF UNITS - *Enter the total number of units for each corresponding process code.*

PROCESS CODE	PROCESS	APPROPRIATE UNITS OF MEASURE FOR PROCESS DESIGN CAPACITY
	Disposal:	
D79	Underground Injection Well Disposal	Gallons; Liters; Gallons Per Day; or Liters Per Day
D80	Landfill	Acre-feet; Hectare-meter; Acres; Cubic Meters; Hectares; Cubic Yards
D81	Land Treatment	Acres or Hectares
D82	Ocean Disposal	Gallons Per Day or Liters Per Day
D83	Surface Impoundment Disposal	Gallons; Liters; Cubic Meters; or Cubic Yards
D99	Other Disposal	Any Unit of Measure in Code Table Below
	Storage:	
S01	Container	Gallons; Liters; Cubic Meters; or Cubic Yards
S02	Tank Storage	Gallons; Liters; Cubic Meters; or Cubic Yards
S03	Waste Pile	Cubic Yards or Cubic Meters
	Surface Impoundment Storage	Gallons; Liters; Cubic Meters; or Cubic Yards
S05	Drip Pad	Gallons; Liters; Acres; Cubic Meters; Hectares; or Cubic Yards
S06	Containment Building Storage	Cubic Yards or Cubic Meters
S99	Other Storage	Any Unit of Measure in Code Table Below
	Treatment:	
T01	Tank Treatment	Gallons Per Day; Liters Per Day
T02	Surface Impoundment Treatment	Gallons Per Day; Liters Per Day
T03	Incinerator	Short Tons Per Hour; Metric Tons Per Hour; Gallons Per Hour; Liters Per Hour; Btu Per Hour; Pounds Per Hour; Short Tons Per Day; Kilograms Per Hour; Gallons Per Day; Liters Per Day; Metric Tons Per Hour; or Million Btu Per Hour
T04	Other Treatment	Gallons Per Day; Liters Per Day; Pounds Per Hour; Short Tons Per Hour; Kilograms Per Hour; Metric Tons Per Day; Metric Tons Per Hour; Short Tons Per Day; Btu Per Hour; Gallons Per Day; Liters Per Hour; or Million Btu Per Hour
T80	Boiler	Gallons; Liters; Gallons Per Hour; Liters Per Hour; Btu Per Hour; or Million Btu Per Hour
	Treatment (continued):	
T81	Cement Kiln	For T81-T93:
T82	Lime Kiln	
T83	Aggregate Kiln	Gallons Per Day; Liters Per Day; Pounds Per Hour; Short Tons Per Hour; Kilograms Per Hour; Metric Tons Per Day; Metric Tons Per Hour; Short Tons Per Day; Btu Per Hour; Liters Per Hour; Kilograms Per Hour; or Million Btu Per Hour
T84	Phosphate Kiln	
T85	Coke Oven	
T86	Blast Furnace	
T87	Smelting, Melting, or Refining Furnace	
T88	Titanium Dioxide Chloride Oxidation Reactor	
T89	Methane Reforming Furnace	
T90	Pulping Liquor Recovery Furnace	
T91	Combustion Device Used In The Recovery Of Sulfur Values From Spent Sulfuric Acid	
T92	Halogen Acid Furnaces	
T93	Other Industrial Furnaces Listed In 40 CFR §260.10	
T94	Containment Building - Treatment	Cubic Yards; Cubic Meters; Short Tons Per Hour; Gallons Per Hour; Liters Per Hour; Btu Per Hour; Pounds Per Hour; Short Tons Per Day; Kilograms Per Hour; Metric Tons Per Day; Gallons Per Day; Liters Per Day; Metric Tons Per Hour; or Million Btu Per Hour
	Miscellaneous (Subpart X):	
X01	Open Burning/Open Detonation	Any Unit of Measure in Code Table Below
X02	Mechanical Processing	Short Tons Per Hour; Metric Tons Per Hour; Short Tons Per Day; Metric Tons Per Day; Pounds Per Hour; Kilograms Per Hour; Gallons Per Hour; Liters Per Hour; or Gallons Per Day
X03	Thermal Unit	Gallons Per Day; Liters Per Day; Pounds Per Hour; Short Tons Per Hour; Kilograms Per Hour; Metric Tons Per Day; Metric Tons Per Hour; Short Tons Per Day; Btu Per Hour; or Million Btu Per Hour
X04	Geologic Repository	Cubic Yards; Cubic Meters; Acre-feet; Hectare-meter; Gallons; or Liters
X99	Other Subpart X	Any Unit of Measure Listed Below

UNIT OF MEASURE	UNIT OF MEASURE CODE
Gallons	G
Gallons Per Hour	E
Gallons Per Day	U
Liters	L
Liters Per Hour	H
Liters Per Day	V

UNIT OF MEASURE	UNIT OF MEASURE CODE
Short Tons Per Hour	D
Metric Tons Per Hour	W
Short Tons Per Day	N
Metric Tons Per Day	S
Pounds Per Hour	J
Kilograms Per Hour	R
Million Btu Per Hour	X

UNIT OF MEASURE	UNIT OF MEASURE CODE
Cubic Yards	Y
Cubic Meters	C
Acres	B
Acre-feet	A
Hectares	Q
Hectare-meter	F
Btu Per Hour	I

8. Process Codes and Design Capacities (Continued)

EXAMPLE FOR COMPLETING Item 8 (shown in line number X-1 below): A facility has a storage tank, which can hold 533.788 gallons.

Line Number		A. Process Code (From list above)			B. PROCESS DESIGN CAPACITY (1) Amount (Specify)	(2) Unit of Measure (Enter code)	C. Process Total Number of Units	For Official Use Only
X	1	S	0	2	5 3 3 . 7 8 8	G	0 0 1	
	1	X	0	1	10 . 00	N	001	
	2				.			
	3				.			
	4				.			
	5				.			
	6				.			
	7				.			
	8				.			
	9				.			
1	0				.			
1	1				.			
1	2				.			
1	3				.			
1	4				.			
1	5				.			

NOTE: If you need to list more than 15 process codes, attach an additional sheet(s) with the information in the same format as above. Number the lines sequentially, taking into account any lines that will be used for "other" processes (i.e., D99, S99, T04 and X99) in Item 9.

9. Other Processes (*See Instructions on page 25 and follow Instructions from Item 8 for D99, S99, T04 and X99 process codes*)

Line Number (Enter #s in sequence with Item 8)		A. Process Code (From list above)			B. PROCESS DESIGN CAPACITY (1) Amount (Specify)	(2) Unit of Measure (Enter code)	C. Process Total Number of Units	D. Description of Process
X	2	T	0	4	1 0 0 . 0 0 0	U	0 0 1	In-situ Vitrification
					.			
					.			
					.			
					.			
					.			

10. Description of Hazardous Wastes (See instructions on page 25) - Enter information in the Sections on Form Page 5.

A. EPA HAZARDOUS WASTE NUMBER - *Enter the four-digit number from 40 CFR, Part 261 Subpart D of each listed hazardous waste you will handle. For hazardous wastes which are not listed in 40 CFR, Part 261 Subpart D, enter the four-digit number(s) from 40 CFR Part 261, Subpart C that describes the characteristics and/or the toxic contaminants of those hazardous wastes.*

B. ESTIMATED ANNUAL QUANTITY - *For each listed waste entered in Section A, estimate the quantity of that waste that will be handled on an annual basis. For each characteristic or toxic contaminant entered in Section A, estimate the total annual quantity of all the non-listed waste(s) that will be handled which possess that characteristic or contaminant.*

C. UNIT OF MEASURE - *For each quantity entered in Section B, enter the unit of measure code. Units of measure which must be used and the appropriate codes are:*

ENGLISH UNIT OF MEASURE	CODE	METRIC UNIT OF MEASURE	CODE
POUNDS	P	KILOGRAMS	K
TONS	T	METRIC TONS	M

If facility records use any other unit of measure for quantity, the units of measure must be converted into one of the required units of measure, taking into account the appropriate density or specific gravity of the waste.

D. PROCESSES

1. **PROCESS CODES:**

For listed hazardous waste: For each listed hazardous waste entered in Section A, select the code(s) from the list of process codes contained in Items 8A and 9A on page 3 to indicate all the processes that will be used to store, treat, and/or dispose of all the listed hazardous wastes.

For non-listed hazardous waste: For each characteristic or toxic contaminant entered in Section A, select the code(s) from the list of process codes contained in Items 8A and 9A on page 3 to indicate all the processes that will be used to store, treat, and/or dispose of all the non-listed hazardous wastes that possess that characteristic or toxic contaminant.

NOTE: THREE SPACES ARE PROVIDED FOR ENTERING PROCESS CODES. IF MORE ARE NEEDED:

1. *Enter the first two as described above.*
2. *Enter "000" in the extreme right box of Item 10.D(1).*
3. *Use additional sheet, enter line number from previous sheet, and enter additional code(s) in Item 10.E.*

2. **PROCESS DESCRIPTION:** *If a code is not listed for a process that will be used, describe the process in Item 10.D(2) or in Item 10.E(2).*

NOTE: HAZARDOUS WASTES DESCRIBED BY MORE THAN ONE EPA HAZARDOUS WASTE NUMBER - Hazardous wastes that can be described by more than one EPA Hazardous Waste Number shall be described on the form as follows:

1. *Select one of the EPA Hazardous Waste Numbers and enter it in Section A. On the same line complete Sections B, C and D by estimating the total annual quantity of the waste and describing all the processes to be used to treat, store, and/or dispose of the waste.*
2. *In Section A of the next line enter the other EPA Hazardous Waste Number that can be used to describe the waste. In Section D(2) on that line enter "included with above" and make no other entries on that line.*
3. *Repeat step 2 for each EPA Hazardous Waste Number that can be used to describe the hazardous waste.*

EXAMPLE FOR COMPLETING Item 10 (shown in line numbers X-1, X-2, X-3, and X-4 below) - A facility will treat and dispose of an estimated 900 pounds per year of chrome shavings from leather tanning and finishing operations. In addition, the facility will treat and dispose of three non-listed wastes. Two wastes are corrosive only and there will be an estimated 200 pounds per year of each waste. The other waste is corrosive and ignitable and there will be an estimated 100 pounds per year of that waste. Treatment will be in an incinerator and disposal will be in a landfill.

Line Number		A. EPA Hazardous Waste No. (Enter code)				B. Estimated Annual Quantity of Waste	C. Unit of Measure (Enter code)	D. PROCESSES (1) PROCESS CODES (Enter code)									(2) PROCESS DESCRIPTION- (If a code is not entered in D(1))
X	1	K	0	5	4	900	P	T	0	3	D	8	0				
X	2	D	0	0	2	400	P	T	0	3	D	8	0				
X	3	D	0	0	1	100	P	T	0	3	D	8	0				
	4	D	0	0	2												Included With Above

EPA ID NO: N M 6 5 7 2 1 2 4 4 2 2

OMB #: 2050-0034 Expires 11/30/2005

10. Description of Hazardous Wastes (Continued. Use the Additional Sheet(s) as necessary; number pages as 5 a, etc.)

Line Number	A. EPA Hazardous Waste No. (Enter code)	B. Estimated Annual Quantity of Waste	C. Unit of Measure (Enter code)	D. PROCESSES (1) PROCESS CODES (Enter code)									D. PROCESSES (2) PROCESS DESCRIPTION (If a code is not entered in D(1))
1	D003	420,000	P	X01									
2													
3													
4													
5													
6													
7													
8													
9													
10													
11													
12													
13													
14													
15													
16													
17													
18													
19													
20													
21													
22													
23													
24													
25													
26													
27													
28													
29													
30													
31													
32													
33													
34													
35													
36													
37													
38													
39													

10. Description of Hazardous Wastes (Continued. Use this Additional Sheet(s) as necessary; number as 5 a, etc.)

Line Number	A. EPA Hazardous Waste No. (Enter code)	B. Estimated Annual Quantity of Waste	C. Unit of Measure (Enter code)	E. PROCESSES (1) PROCESS CODES (Enter code)	E. PROCESSES (2) PROCESS DESCRIPTION (If a code is not entered in E(1))
4 0					

11. Map (See instructions on pages 25 and 26) Attached

Attach to this application a topographic map, or other equivalent map, of the area extending to at least one mile beyond property boundaries. The map must show the outline of the facility, the location of each of its existing and proposed intake and discharge structures, each of its hazardous waste treatment, storage, or disposal facilities, and each well where it injects fluids underground. Include all springs, rivers and other surface water bodies in this map area. See instructions for precise requirements.

12. Facility Drawing (See instructions on page 26) Attached

All existing facilities must include a scale drawing of the facility (see instructions for more detail).

13. Photographs (See instructions on page 26) Attached

All existing facilities must include photographs (aerial or ground-level) that clearly delineate all existing structures; existing storage, treatment and disposal areas; and sites of future storage, treatment or disposal areas (see instructions for more detail).

14. Comments (See instructions on page 26)

1.0 CERTIFICATION

I certify under penalty of law that this document and all attachments were prepared under my direction or supervision according to a system designed to assure that qualified personnel properly gather and evaluate the information submitted. Based on my inquiry of the person or persons who manage the system, or those persons directly responsible for gathering the information, the information submitted is, to the best of my knowledge and belief, true, accurate, and complete. I am aware that there are significant penalties for submitting false information, including the possibility of fine and imprisonment for knowing violations.

For David L. Goldfein, Colonel USAF
Commander

AUG 29, 2006
Date Signed

20,000 POUND OD UNIT PHOTOGRAPHS

SUBPART X RCRA PERMIT RENEWAL APPLICATION
20,OOO POUND OPEN DETONATION (OD) TREATMENT UNIT
UNITED STATES DEPARTMENT OF THE AIR FORCE
HOLLLOMAN AIF FORCE BASE
OTERO COUNTY, NEW MEXICO

Photograph A-1. View of OD Unit from the southern berm.

Photograph A-2. View of OD Unit from the southwest.

Photograph A-3. View of west portion of OD Unit.

Photograph A-4. View of OD Unit from the east.

Photograph A-5. View of OD Unit from the east.

Photograph A-6. Access gate at the south end of the OD Unit.

Photograph A-7. View to the north from the south access gate.

Photograph A-8. View of west fence from the OD Unit berm.

Photograph A-9. View of Tuly Peak from the OD Unit.

PART B
RCRA PERMIT RENEWAL APPLICATION
20,000 POUND OPEN DETONATION (OD) TREATMENT UNIT
UNITED STATES DEPARTMENT OF THE AIR FORCE
HOLLLOMAN AIR FORCE BASE
OTERO COUNTY, NEW MEXICO

Revision 0.0

DRAFT
ATTACHMENT A

FACILITY DESCRIPTION

HOLLOMAN AIR FORCE BASE
OPEN DETONATION TREATMENT UNIT

Permit No. NM6572124422

ATTACHMENT A
FACILITY DESCRIPTION

INTRODUCTION

The following information is provided in accordance with New Mexico Administrative Code (NMAC), Title 20, Chapter 4, Part 1, Subpart IX (20.4.1.900 NMAC) incorporating Title 40 Code of Federal Regulations (CFR) §270.14 (b)(1). A general description of the location of the subject OD Unit and site characteristics is included.

A.1 GENERAL DESCRIPTION [20.4.1.900 NMAC §270.14(b)(1)]

Holloman Air Force Base (HAFB) is located on approximately 50,700 acres of land in Otero County, south-central New Mexico. HAFB lands are situated in the northern Chihuahuan Desert in the region known as the Tularosa Basin that is bounded to the east and west by the Sacramento and San Andres Mountains, respectively. HAFB is located adjacent to White Sands Missile Range, and White Sands National Monument is located west of the Base. Regional water supplies are derived from Bonita Lake, located approximately 60 miles north of the base and the Boles, Douglas, and San Andres Well Fields located 14 miles to the southeast.

The nearest population center to HAFB is the city of Alamogordo, located approximately 7 miles to the east. Regional metropolitan centers include El Paso, Texas, located 75 miles south-southwest, Las Cruces, New Mexico, located 65 miles to the southwest, and Albuquerque, New Mexico, located 210 miles north of the facility. The primary transportation route for the facility is Highway 70 that traverses the southern boundary of the base in a northeasterly direction. The general location of HAFB is depicted in Figure A-1. The 20,000-Pound Open Detonation (OD) Unit is located adjacent to the northern boundary of HAFB. The area to the north is part of the White Sands Missile Range.

HAFB was initiated as a temporary facility developed to provide gunnery and bomber training to aircrews during the Second World War. The Base mission was altered in the postwar years to the development of pilotless aircraft, guided missiles, and associated equipment. In the late 1950s the base was transferred to the Air Force Systems Command (AFSC) and designated as the Air Force Missile Development Center. On January 1, 1971, the base mission expanded to provide lead-in fighter training for the 479th Tactical Training Wing and its components.

Currently, HAFB hosts the Air Combat Command (ACC) 49th Fighter Wing, which includes pilot training, mobility support, and combat support operations. The primary Air Force Materiel Command (AFMC) component located at HAFB is the 46th Test Group, which is responsible for evaluation of propulsion and navigational systems for aircraft, space vehicles, and missiles. A variety of tenant organizations are assigned to HAFB, including the 4th Space Control Squadron and Detachment 4, the 50th Weather Squadron. A general layout of the facility is provided in Figure A-2. As a result of ACC readiness requirements and the 46th Test Group activities, a variety of ordnance, munitions, incendiaries, and propellants become waste because of exceedence of shelf-life, unanticipated deterioration, or failure to attain specifications that render the device non-serviceable. These waste explosives are considered characteristically hazardous under the Resource Conservation and Recovery Act (RCRA) due to reactivity (D003). Rocket motors exceeding 300 pounds are treated at the 20,000-Pound OD Unit that is subject to this permit. These units are regulated under 40 CFR 264, Subpart V §264.600.

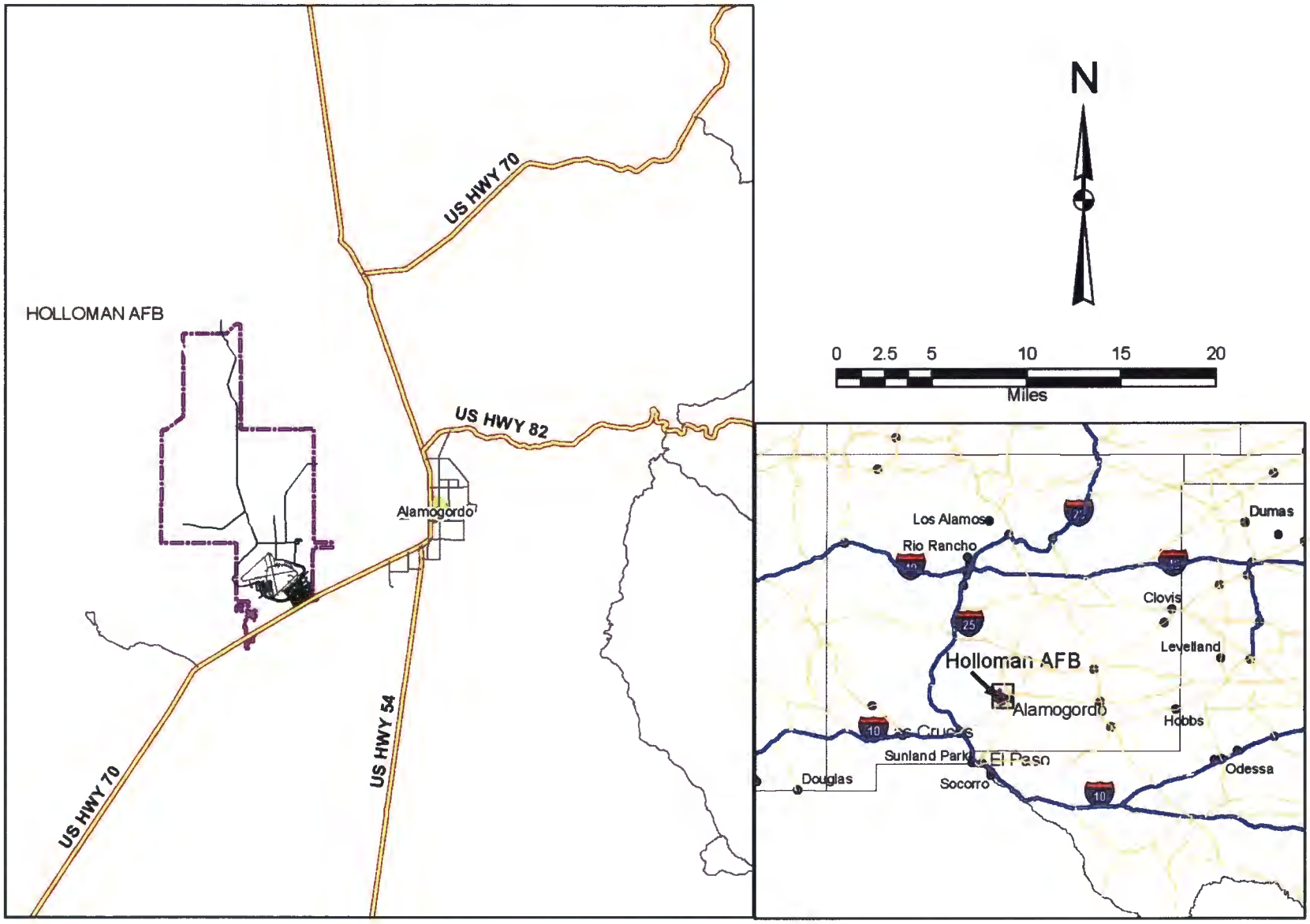

Figure A-1. General Location of Holloman Air Force Base

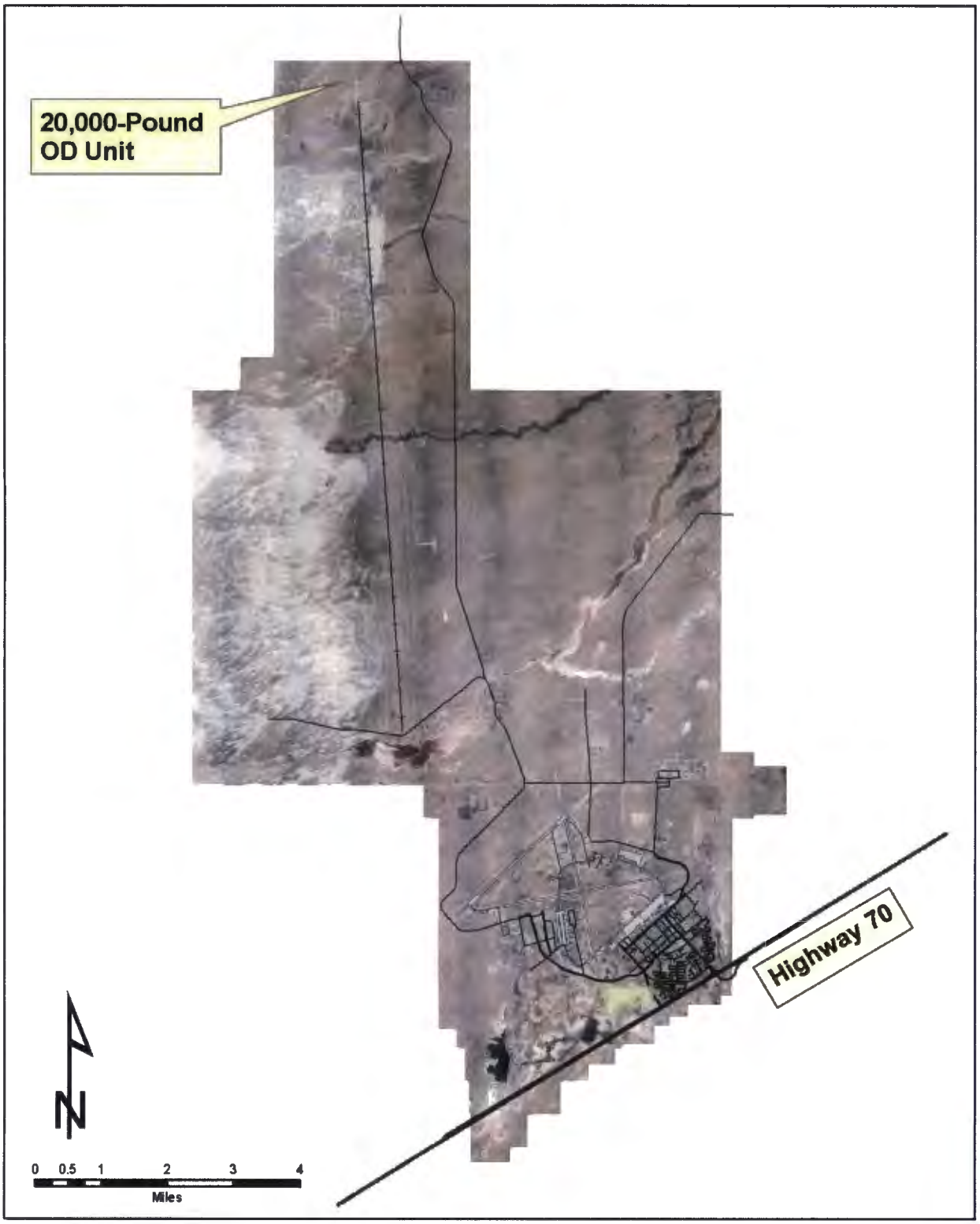

Figure A-2. Facility Layout of Holloman Air Force Base

The 20,000-Pound OD Unit derives its name from the relevant operating procedures for this treatment activity. The net explosive weight (NEW) of solid propellant rocket motors that are, and will be simultaneously treated in the trench is limited to 20,000 pounds (i.e., 20,000 pounds per treatment event). This total does not include the mass of the casings, other associated containment devices, and detonating charges. Although the precise number of treatment occurrences during any year is variable, discrete treatment events will occur at typical frequencies of at least one event per month, giving a total of 420,000 pounds NEW per calendar year. More specific information on ordnance constituents, the OD Unit, and operating procedures is provided in other attachments to this permit application.

The 20,000-Pound OD Unit consists of a clear zone approximately 400 feet in diameter (Figure A-3). Treatment of the wastes is accomplished by placing the explosive ordnance on top of the ground within a 100-foot diameter area at the center of the clear zone. The waste is then treated by detonation. The force of the explosion often creates a depression in the ground, which is inspected to ensure that the waste has been completely destroyed. Unexploded ordnance (UXO) that may have been ejected from the depression is collected and returned to the depression and exploded again to treat the UXO. Casings and fragments that do not have UXO are collected and containerized. Subsequent detonations are performed at locations surrounding the first depression within the 100-foot diameter detonation area. When the detonation area is covered with depressions, a bulldozer smooths out the site, filling in the depressions. During soil sampling, the last detonation depression is not filled in, nor is any dirt work conducted, until the soil samples have been collected. The location of the OD Unit and its surrounding area relative to the main base is provided in Figure A-2. A unit drawing of the area, showing dimensions of the unit, is shown in Figure A-4.

A berm, minimum height of 2 feet, exists at the south end of the OD Unit to prevent carryover of fragments towards the test track area.

A.2 TRAFFIC INFORMATION [20.4.1.900 NMAC §270.14(B)(10)]

Access to the 20,000-Pound OD Unit is restricted to explosive ordnance disposal (EOD) personnel and personnel with appropriate security clearance and identification or escorted visitors. The OD Unit is surrounded by a barbed wire fence that restricts access to the unit.

A.2.1 ROUTES OF TRAVEL AND TRAFFIC VOLUME

The 20,000-Pound OD Unit is located at the northern boundary of HAFB, approximately 15 miles from the HAFB entrance. Access to the 20,000-Pound Unit is provided by a single paved road. A dirt road provides access from the paved road to the edge of the OD Unit. The detonation area is approximately one quarter mile from the paved road. Traffic along this route is restricted to official use by the EOD personnel during explosive operations, but may be accessed by personnel using the adjacent Test Track. As a result of these restrictions, the typical traffic volume and pattern consist of a maximum of several vehicles per day that are in transit to or from the unit.

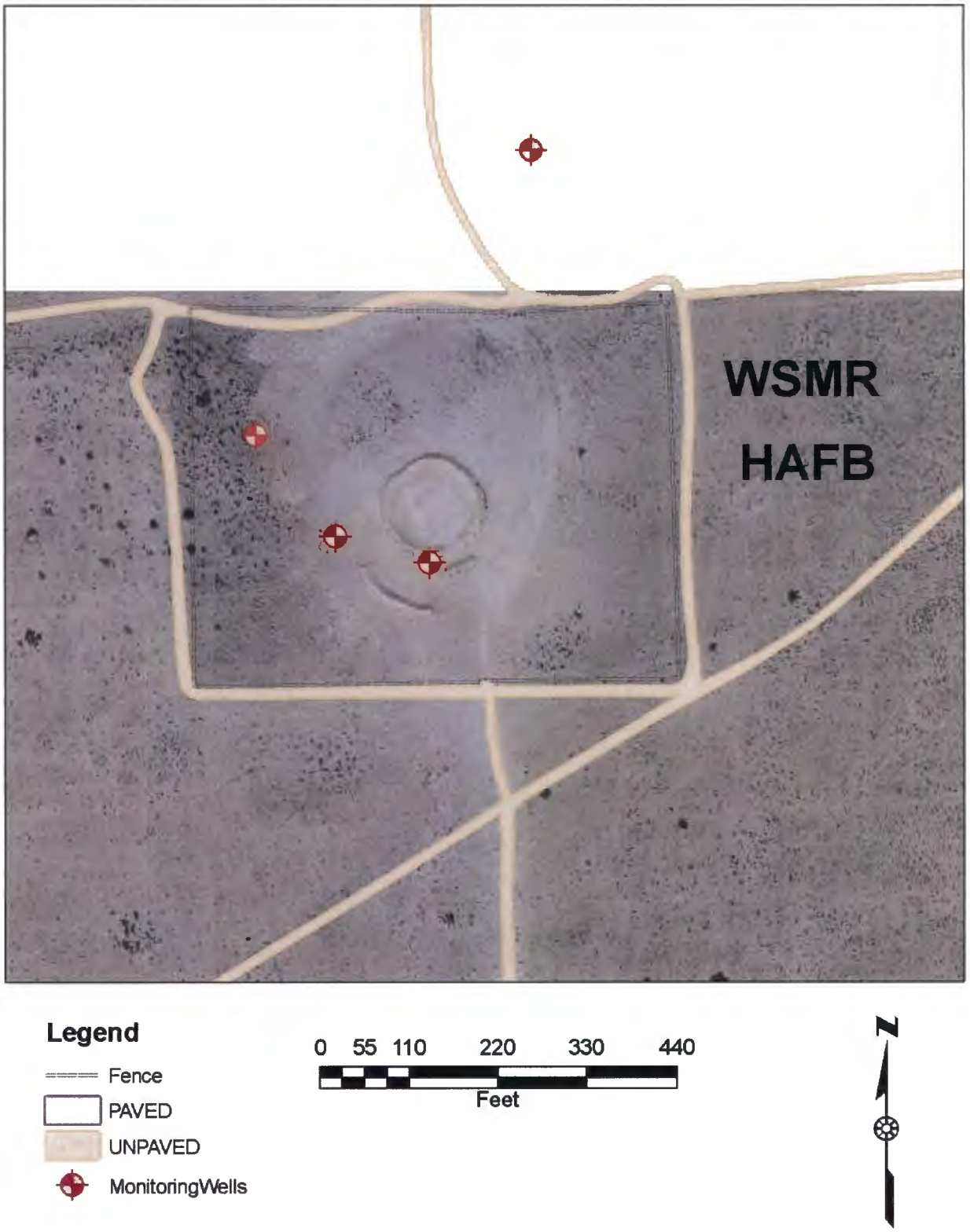

Figure A-3 20,000-Pound OD Unit Layout

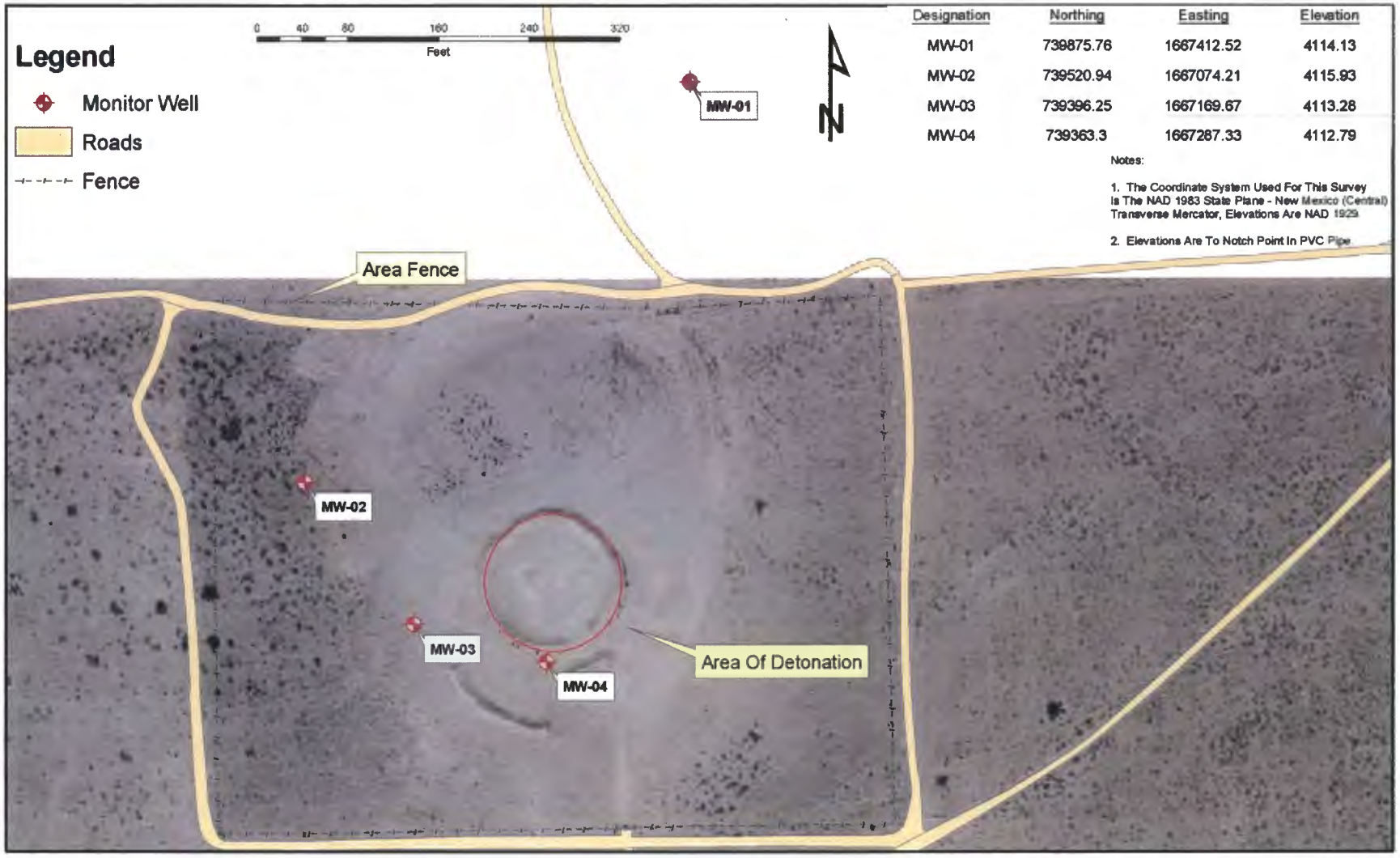

Designation	Northing	Easting	Elevation
MW-01	739875.76	1667412.52	4114.13
MW-02	739520.94	1667074.21	4115.93
MW-03	739396.25	1667169.67	4113.28
MW-04	739363.3	1667287.33	4112.79

Figure A-4 Detailed Drawing of the 20,000-Pound Open Detonation Unit

A.2.2 ACCESS ROAD SURFACE AND LOAD BEARING CAPACITY

The only access road to the subject OD treatment unit is a paved surface. This surface is periodically maintained to prevent formation of holes, ditches, or other deformation that would increase the possibility of accidental detonation during transport.

The paved service road was graded and compacted to provide capacity for automobiles, light trucks, heavy trucks, and service vehicles. The maximum amount of waste moved per vehicle movement along the paved surface road is 40,000 pounds. This total weight includes the net explosive weight and the weight from inert casings, canisters, and other materials.

A.3 LOCATION INFORMATION [20.4.1.900 NMAC §270.14(b)(11)]

Information addressing the seismic standard and 100-year floodplain standard is presented below.

A.3.1 SEISMIC STANDARD [20.4.1.900 NMAC §§270.14(b)(11)(i and ii) and 20.4.1.500 NMAC §264.18(a)]

HAFB is an "existing" facility and is exempt from this requirement.

A.3.2 FLOODPLAIN STANDARD [20.4.1.900 NMAC §270.14(b)(11)(iii), (iv), and (v); §270.14(b)(19)(ii); and 20.4.1.500 NMAC §264.18(b)]

The FEMA floodplain map included as Figure A-5 shows that the OD Unit is not located within the 100-year floodplain as defined in §264.18(b)(2)(i). Hence, the floodplain requirements are not applicable to the OD Unit at HAFB.

A.4 TOPOGRAPHIC MAPS [20.4.1.900 NMAC §270.14(b)(19)

The general requirements of 20.4.1.900 NMAC §270.14(b)(19) are met in a topographic map of the 20,000-Pound OD Unit and the surrounding area in Figure A-6. The OD Unit is also above the 100-year floodplain boundaries. The topographic map delineates the area relief at intervals of 2 feet. HAFB facility boundaries in the vicinity of the 20,000-Pound OD Unit are designated in the following figures:

- Map scale and date – Figure A-6 (taken from U.S. Geological Survey map dated 1981, Tularosa Peak, NM, 7.5 minute quadrangle) shows a large- and small-scale topographic map of the Unit. The large-scale map is at a scale of one inch equal to 300 feet and shows topography in a 3000- by 2500-foot area around the Unit. The map is presented at that scale because all topographic contours are visible and a larger portion of the area surrounding the Unit can be seen. The small-scale map shows the topography of the surrounding area and all hydrologic features in the vicinity of the Unit.

- 100-year floodplain area (Figure A-5) – The topographic map indicates that the unit is located in relatively flat terrain.

Figure A-5 Holloman Air Force Base Floodplains

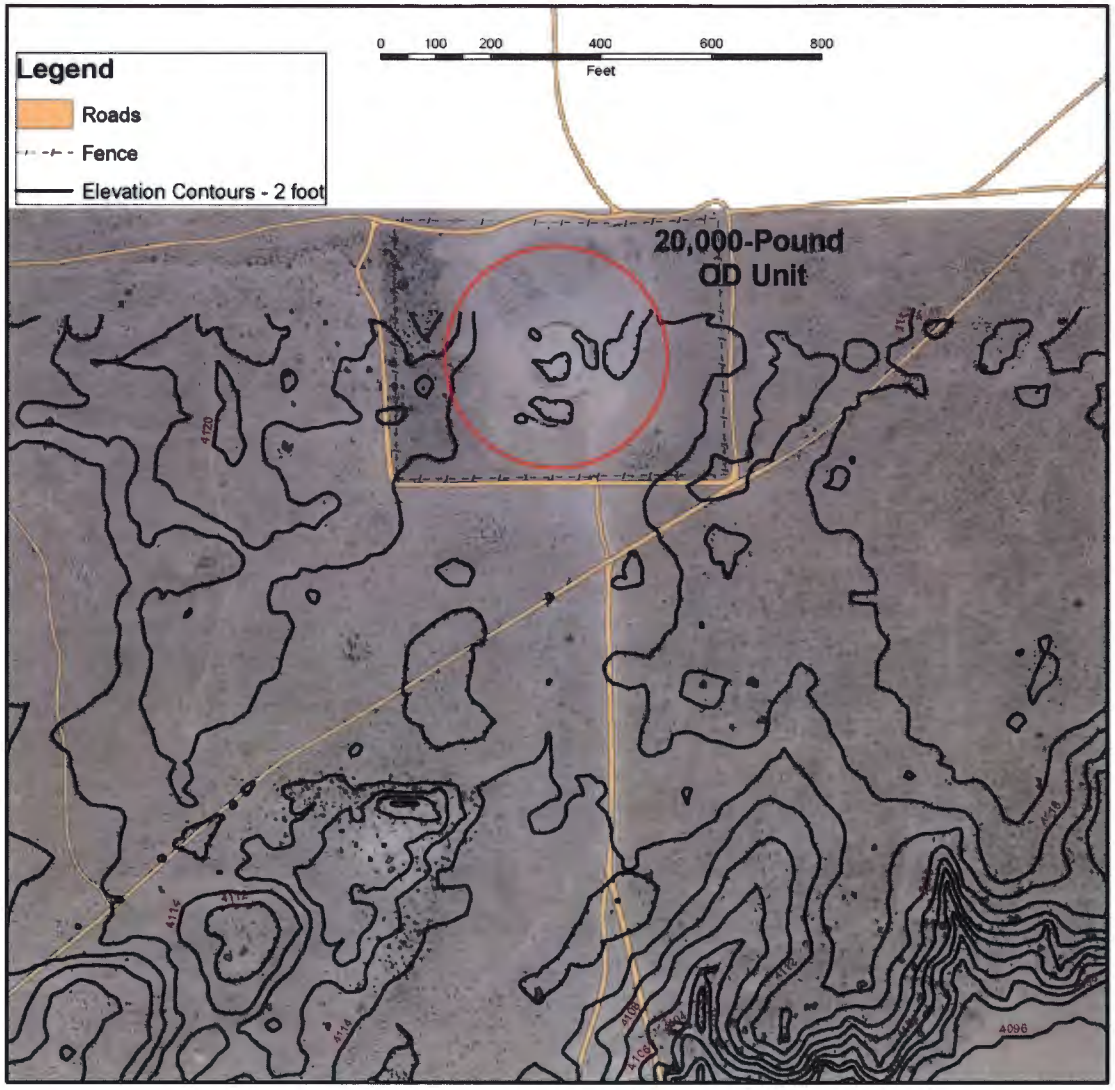

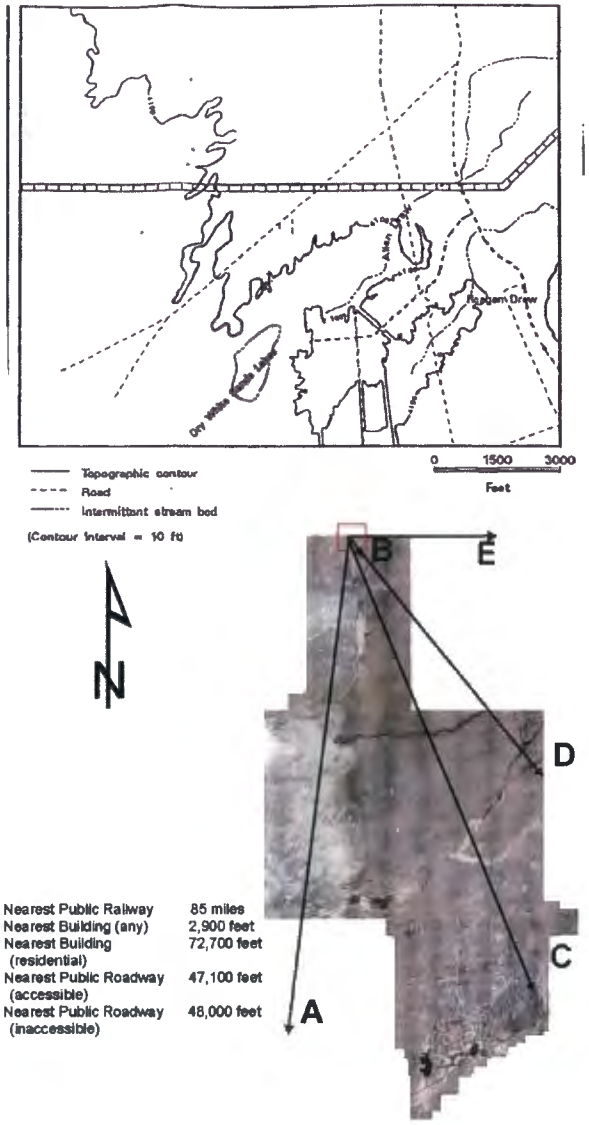

A	Nearest Public Railway	85 miles
B	Nearest Building (any)	2,900 feet
C	Nearest Building (residential)	72,700 feet
D	Nearest Public Roadway (accessible)	47,100 feet
E	Nearest Public Roadway (inaccessible)	48,000 feet

Figure A-6 Topographic Map of the 20,000-Pound OD Unit

- Surface waters including intermittent streams (Figure A-4) – No surface water of constant flow conditions is located in the area, although arroyos that contain runoff are located in the vicinity of the unit.

- A wind rose (i.e., prevailing wind-speed and direction) – Wind roses for 2000 through 2005 are shown on Figures A-7 through A-11.

- Surrounding land uses (residential, commercial, agricultural, recreational) – Due to the size of the installation, several insets are used to show the required features (Figure A-12). The 20,000-Pound OD Unit is located approximately 100 feet within the northern boundary of HAFB. White Sands Missile Range lies to the north and west of the adjacent base boundaries. The unit is situated on undeveloped grassland near areas of barren land (dunes) and arroyos and is isolated from commercial and residential land uses. The closest building on or off the Facility is approximately 4000 feet from the OD Unit. The distances to the nearest residential buildings is 72,700 feet, to a public roadway is 48,000 feet, and to a passenger railroad is 85 miles.

- Orientation of the map (north arrow) – All maps included in the permit application show the orientation (north arrow).

- Legal boundaries of the Hazardous Waste Management facility site – The legal boundaries of HAFB are shown on Figure A-2.

- Access control (fences, gates) – All lands within HAFB boundaries are under the control of the U.S. Air Force. Thus, the unit is surrounded by access-controlled Federal lands for a distance of several miles in all directions.

- Injection and withdrawal wells both on-site and off-site – The location of the monitoring wells around the OD Unit are shown on Figure A-4.

- Buildings; treatment, storage, or disposal operations; or other structures (such as recreation areas, runoff control systems, access and internal roads, storm, sanitary, and process sewerage systems, loading and unloading areas, fire control facilities) – As indicated above, the area around the OD Unit is owned/controlled by the Federal government. Figure A-13 shows the nearest treatment units, roads and structures. The nearest structure is approximately 3 miles from the OD Unit.

- Barriers for drainage or flood control – An earthen berm provides a barrier to prevent drainage from the area of the OD Unit. The OD Unit is not located within the 100-year floodplain, and barriers for flood control are not necessary.

- Location of operational units within the hazardous waste management facility site (Solid Waste Management Units [SWMUs] and Installation Restoration Program [IRP] site), where hazardous waste is (or will be) treated, stored, or disposed (include equipment cleanup areas) – The location of the OD Unit and other operational units are shown on Figure A-13.

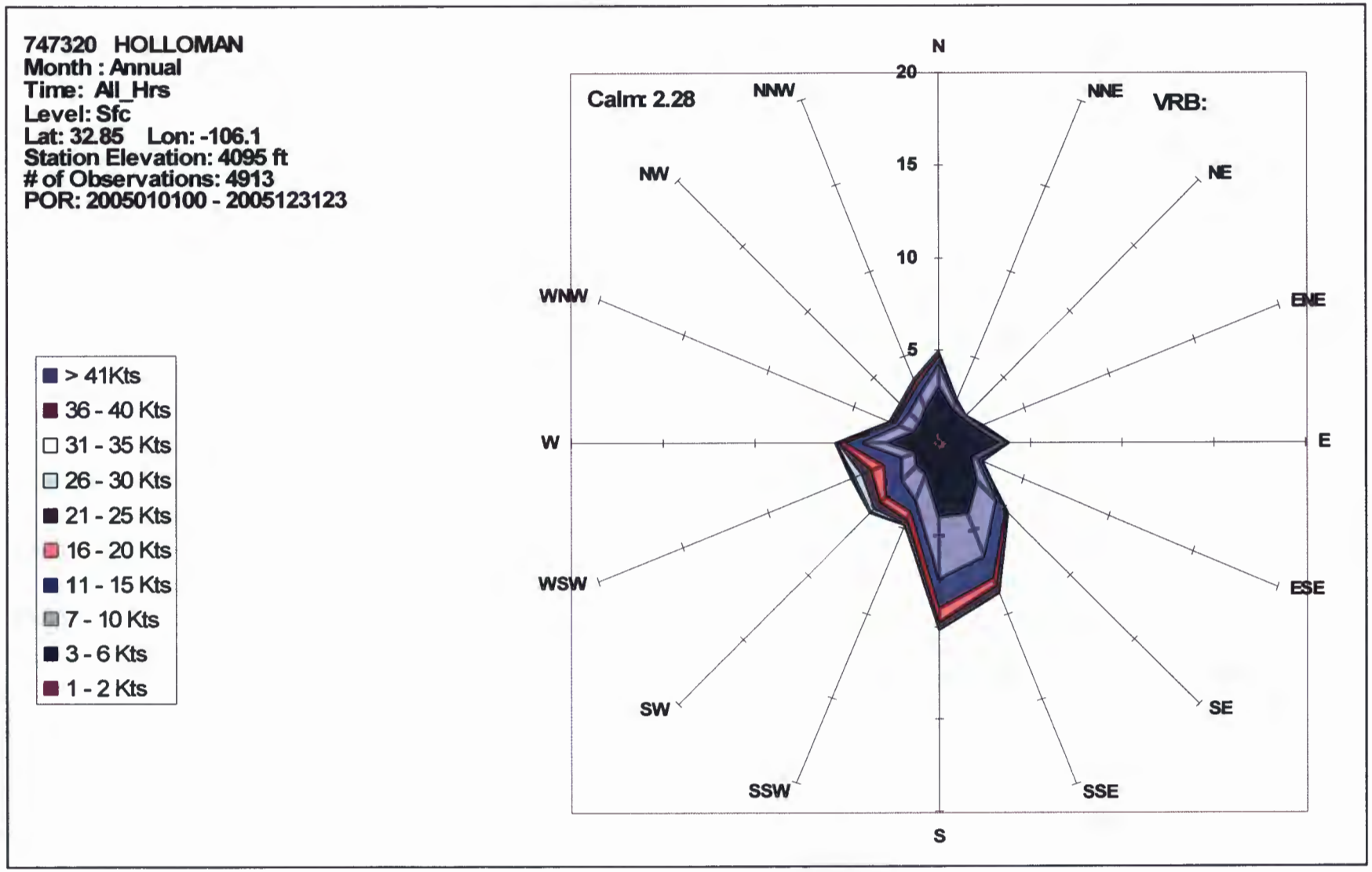

Figure A-7 Frequency (%) of Wind Speed by Direction – 2001

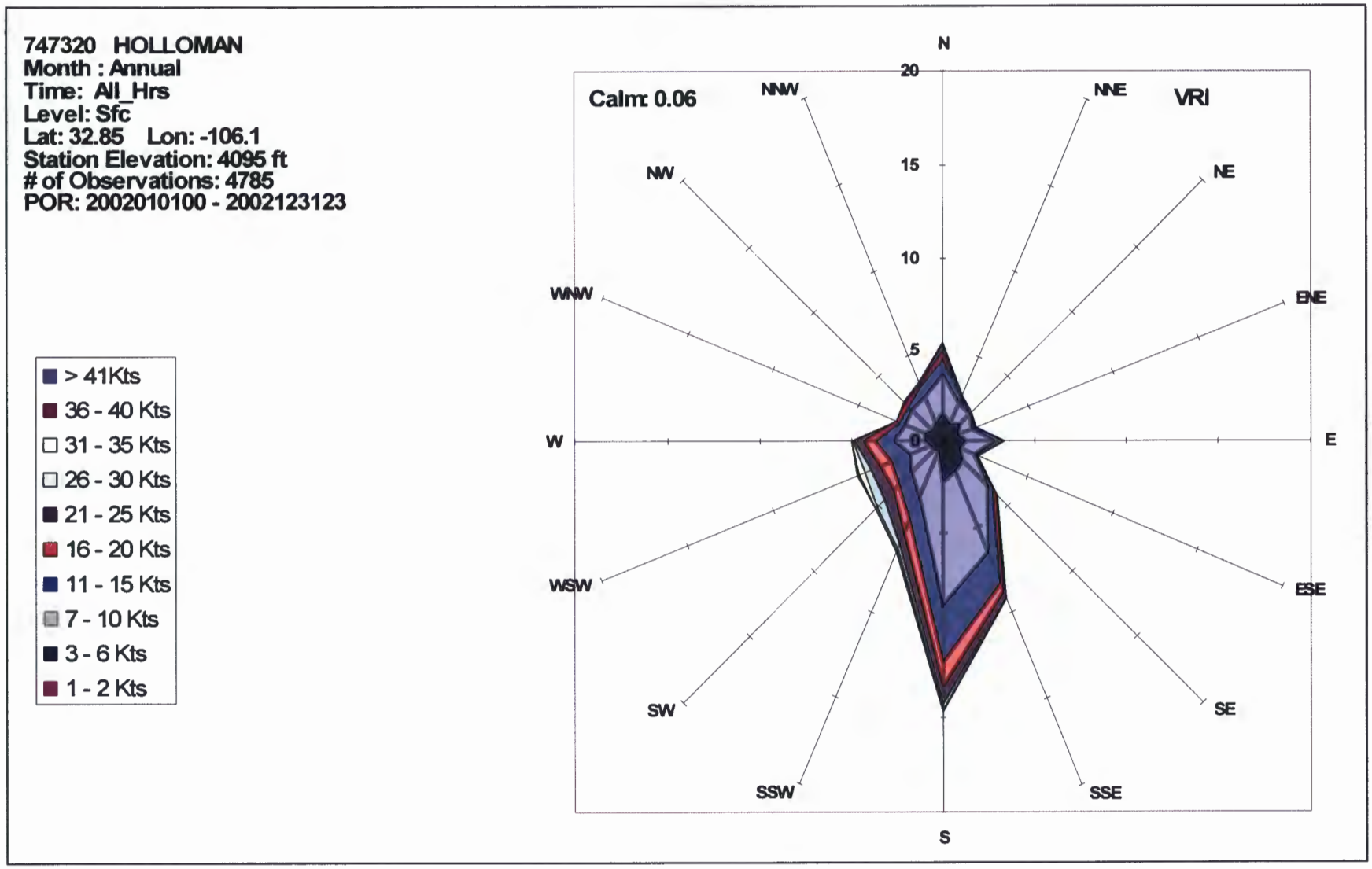

Figure A-8 Frequency (%) of Wind Speed by Direction – 2002

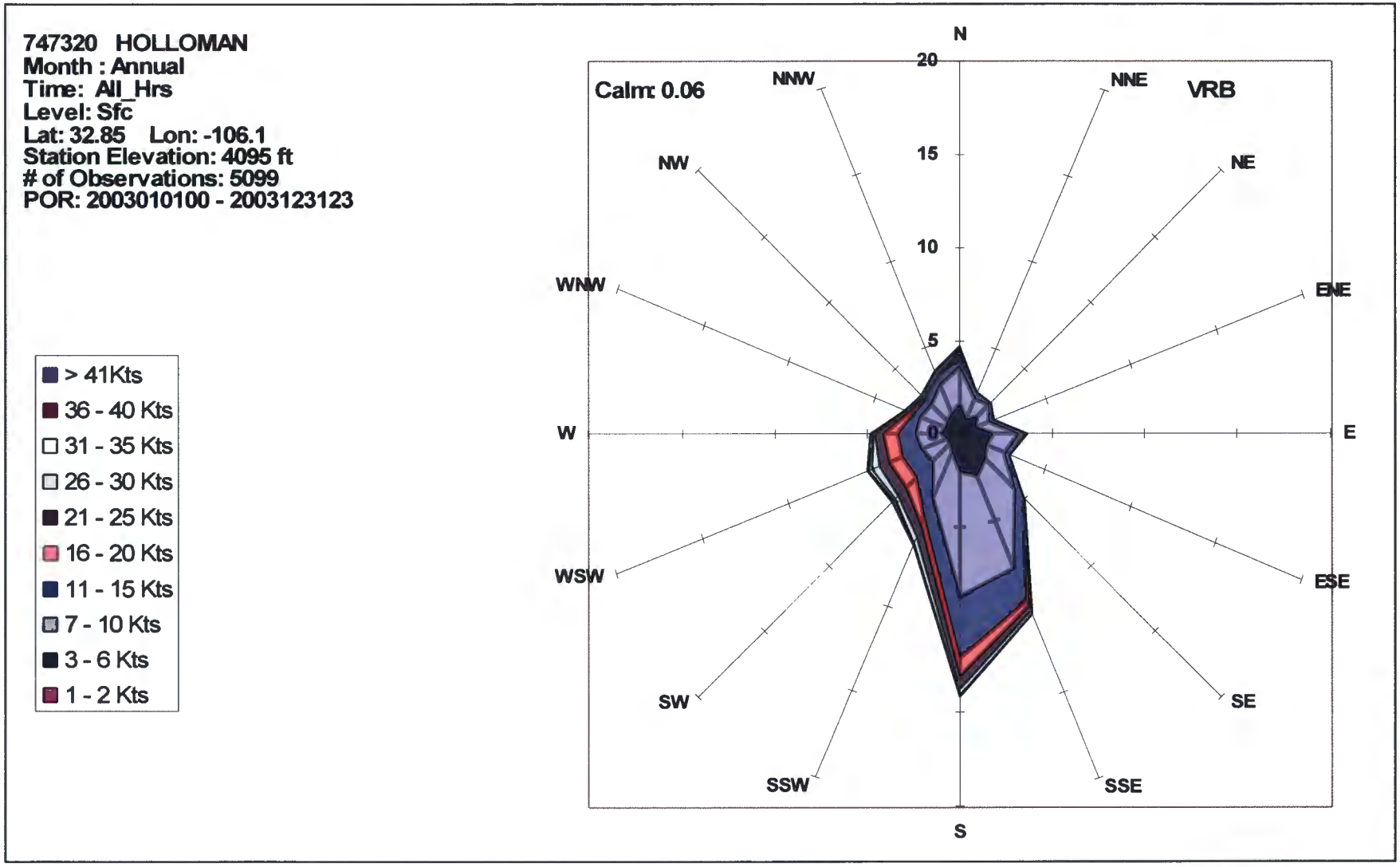

Figure A-9 Frequency (%) of Wind Speed by Direction – 2003

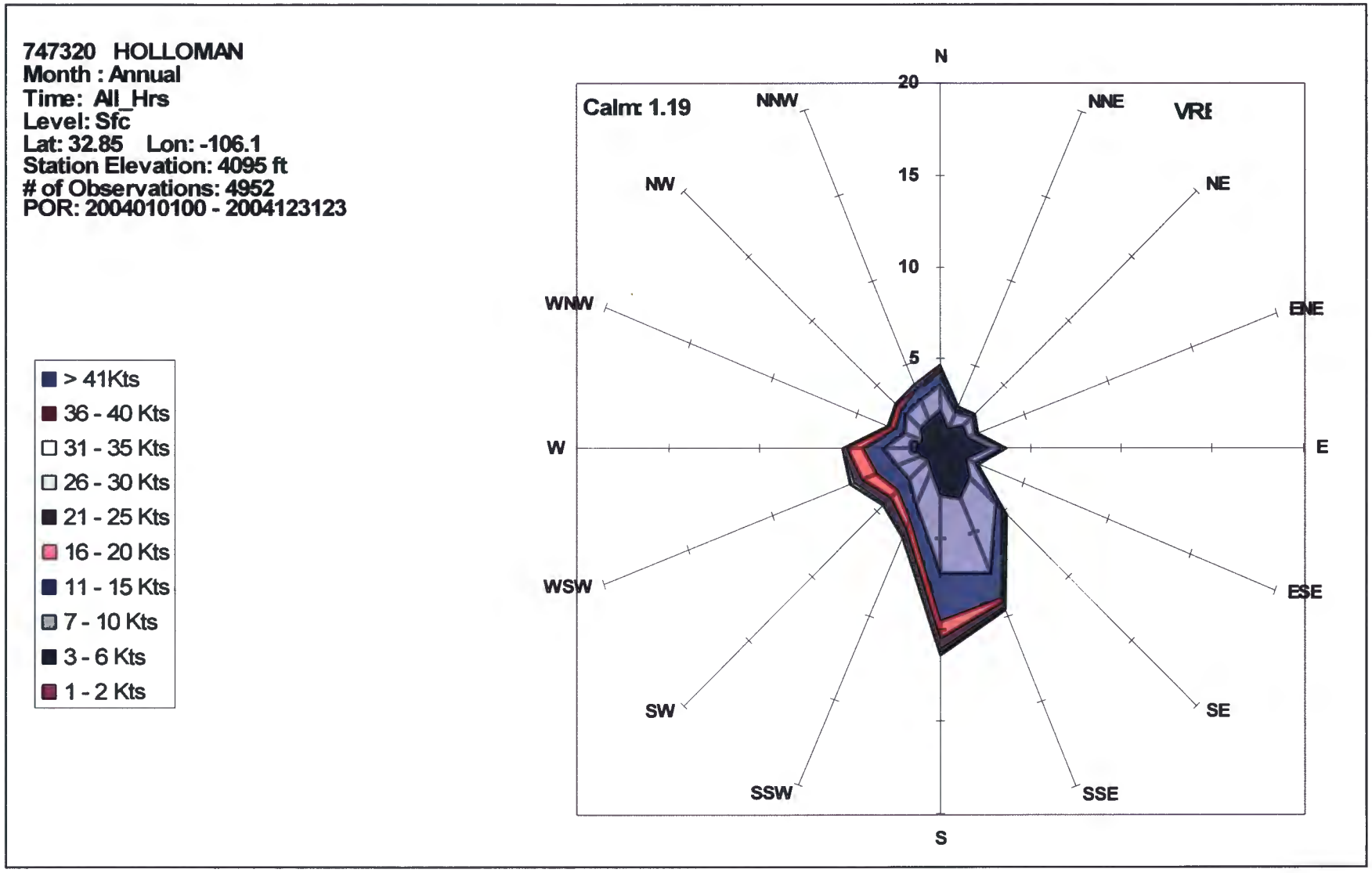

Figure A-10 Frequency (%) of Wind Speed by Direction – 2004

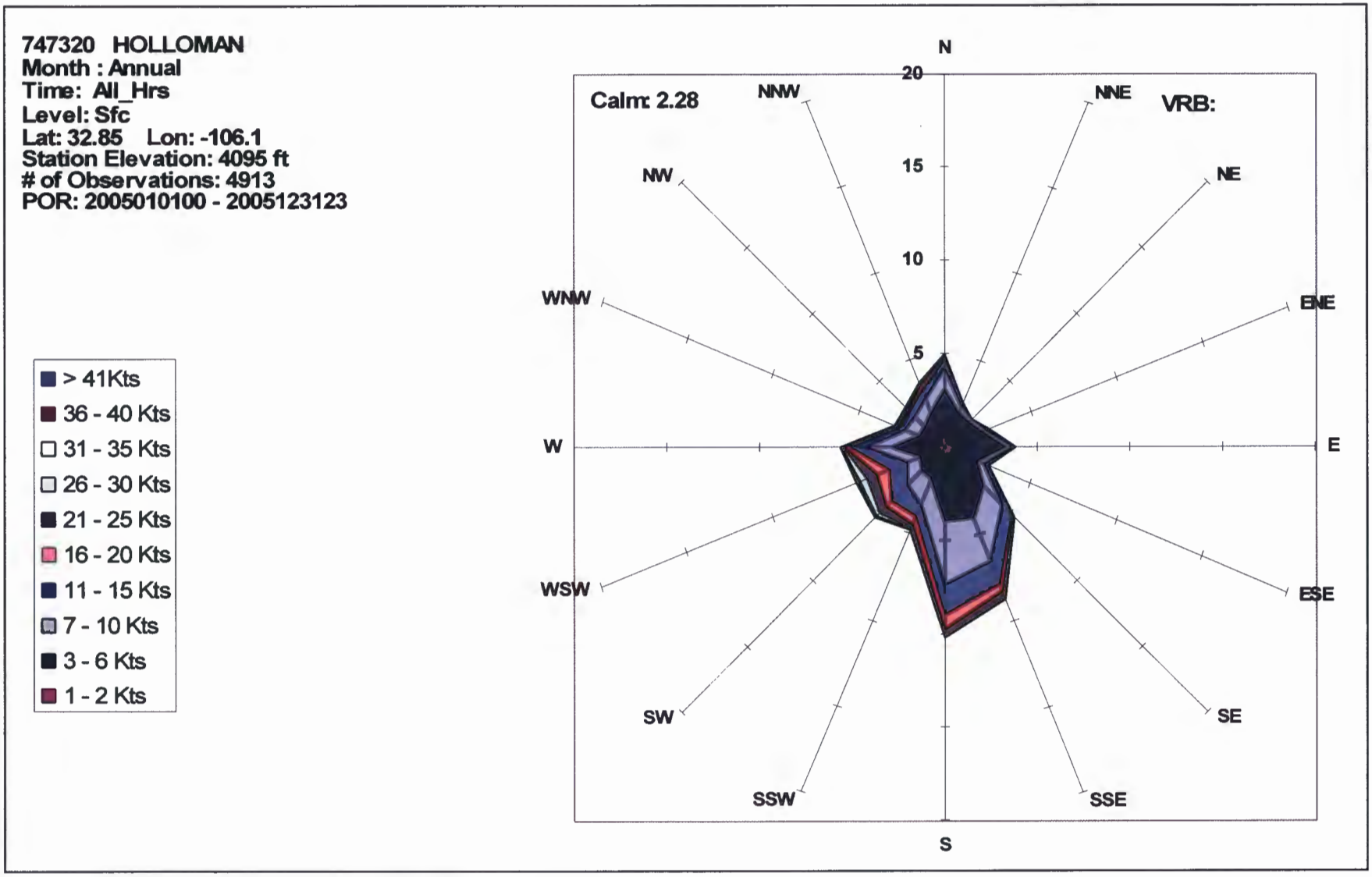

Figure A-11 Frequency (%) of Wind Speed by Direction – 2005

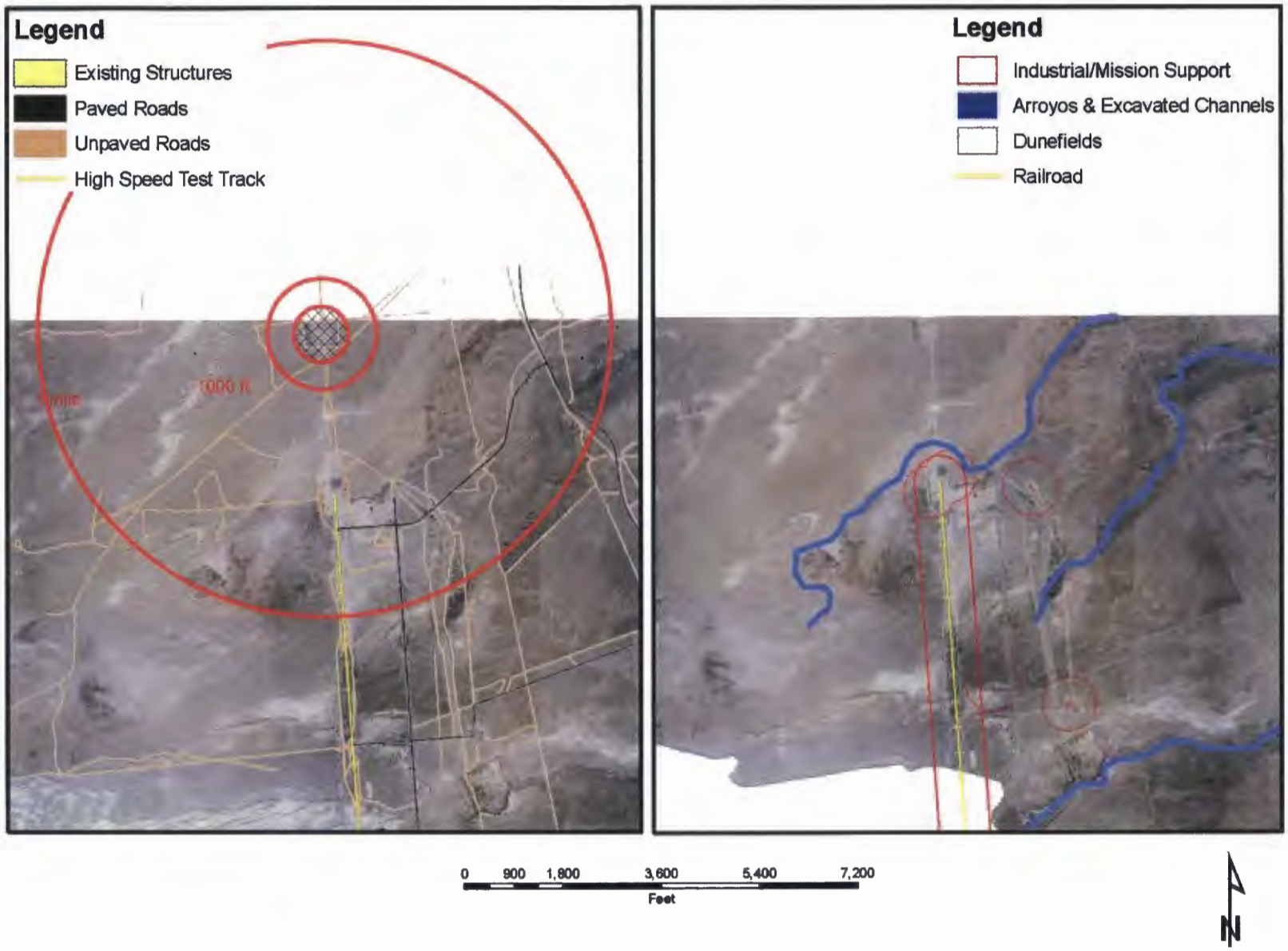

Figure A-12 Location of the 20,000-Pound OD Unit and Surrounding Area

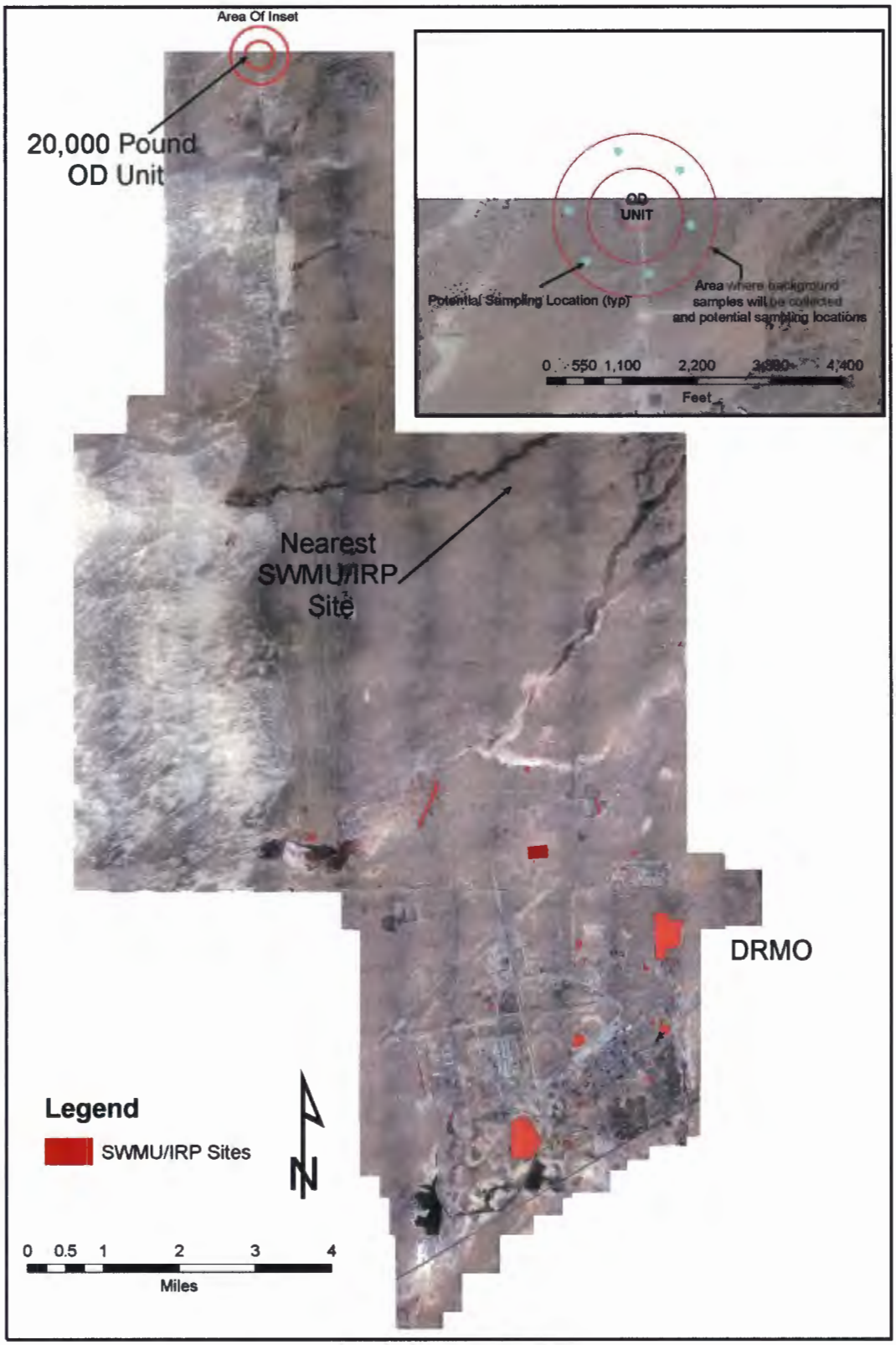

Figure A-13 Location of 20,000-Pound OD Unit in Relation to SWMU, IRP Sites, and DRMO at Holloman Air Force Base

A.5 ADDITIONAL INFORMATION REQUIREMENTS [20.4.1.900 NMAC §270.14(c)]

Owners or operators or "regulated units" are required to provide additional information regarding protection of groundwater. Regulated units, as described in 20.4.1.500 NMAC §264.90(a)(2) include surface impoundments, waste piles, land treatment units, or landfills that receive hazardous waste after July 26, 1982. There are no "regulated units" at the HAFB; therefore, the requirements of this regulation are not applicable.

Note: Geology and meteorological information is presented in Attachment I, Environmental Protection.

DRAFT
ATTACHMENT B

WASTE ANALYSIS PLAN

HOLLOMAN AIR FORCE BASE
OPEN DETONATION TREATMENT UNIT

Permit No. NM6572124422

ATTACHMENT B
WASTE ANALYSIS PLAN

INTRODUCTION

This Waste Analysis Plan (WAP) describes the procedures used to characterize wastes that are treated and residues that are generated during treatment at the 20,000-Pound Open Detonation Unit. The WAP addresses the applicable waste analysis requirements in the Title 20, Chapter 4, Part 1, Section V New Mexico Administrative Code (20.4.1.500 NMAC, incorporating 40 Code of Federal Regulations (CFR) §§264.13, 264.602, and 270.14(b), and 20.4.1.300 NMAC, incorporating 40 CFR Part 268.

The WAP also references the Sampling and Analysis Plan (SAP), included as Attachment H, that describes post-treatment sampling of residues and soil.

The 20,000-Pound OD Unit consists of a cleared area within which waste explosives and propellant devices will be detonated. The wastes that will be treated are considered characteristically hazardous on the basis of reactivity. During treatment, the waste to be treated is placed on top of the ground. Detonation charges that consist of cyclotrimethylene trinitramine (RDX) explosive are added to the pile in order to detonate the waste. The detonation reaction renders the explosive wastes nonreactive and results in both solid and gaseous by-products. Depending upon combustion conditions, the gaseous by-products will consist of carbon monoxide (CO), carbon dioxide (CO_2), water (H_2O), nitrogen (N_2), and various nitrogen oxides (NO_X). Solid by-products include casings from the waste and possibly trace concentrations of incompletely oxidized reactive material. Reaction by-products that are solid will be retained in the depression created by the explosive force (except for ejected components), but the gaseous reaction by-products vent to the atmosphere. These solid by-products will be gathered and re-detonated or drummed for proper disposal. Due to the difficulties and obvious hazards associated with collection of gas samples in the immediate vicinity of the detonation zone, this plan does not address the gas phase reaction by-products. An assessment of the gaseous constituents released during combustion is provided in Permit Attachment I.

B.1 WASTE CLASSIFICATION AND IDENTIFICATION

Detailed chemical and physical analyses have been performed by the Department of Defense for all military ordnance material. These analyses have been compiled into ordnance material specifications and "Technical Supply Bulletins." Due to the vast amount of knowledge on the composition of ordnance materials that has been assembled for each particular ordnance material, and the dangers involved in deactivating a bomb or explosive, samples of the waste ordnance materials are not routinely obtained and chemically analyzed. Instead, a well-defined knowledge of the constituents used in making the ordnance materials has been compiled. This understanding of the waste constituents is presented in lieu of extremely dangerous predetonation sampling and analysis. A chemical analysis would not yield additional information and could pose a risk to sampling and analysis personnel.

The wastes that are treated in the 20,000-Pound OD Unit are generally propellant devices and explosives with expired shelf lives. Rocket motors exceeding 300 pounds are regularly treated at

the 20,000-Pound OD Unit. Similar constituents are used in the formulation of the different items, but the quantity of specific energetic materials varies. In addition to the energetic material, the waste consists of the unit metallic components associated with these devices such as the casings. The total mass of the energetic material is typically limited to less than 10,000 pounds per device. The energetic materials contained in these wastes are considered characteristically hazardous on the basis of reactivity. Nitroglycerin is listed on the basis of its reactivity. The reactive wastes are identified as such because these materials are explosives that deflagrate or detonate when subjected to shock or heat.

Single-base propellants contain nitrocellulose (with 12.5 – 13% N) as the primary constituent. In addition to nitrocellulose, single-base propellants contain organic nitrocompounds, stabilizers, and metal salts. The organic nitrocompounds commonly employed in single-base systems include trinitrotoluene and dinitrotoluene. Organic nitro compounds are utilized to disperse the nitrocellulose as colloidal particles. Stabilizers are required in the composition due to the tendency of nitrocellulose to decompose during storage, particularly as moisture is absorbed. Decomposition of nitrocellulose is an exothermic reaction that is indicated initially by an acid odor or condition that progresses to emission of red fumes and spontaneous ignition as the propellant becomes unstable. Due to this condition, nitrocellulose-based propellants are stored in bulk, are vigorously monitored for pH changes, and are compounded with stabilizers used to retard decay. Typical stabilizers used to retard this condition include diphenylamine, nitrodiphenylamine, diethyl diphenylurea, and petroleum jelly (cordite). As decomposition proceeds, nitrophenylamines, nitroureas, and nitroanilines are formed. This variety of the analogs will be present in waste single-based propellants. However, as the original concentration of the stabilizer seldom exceeds 1.0%, the concentration of those decomposition products will be in the parts per thousand range.

In addition to nitrocellulose fuel, nitro-based dispersion agent, and stabilizer, certain propellants incorporate small quantities of metal compounds and elements. These compounds include potassium sulfate, tin, and graphite that are not characteristically hazardous.

Double-base propellant formulations include both nitrocellulose and nitroglycerin with limited quantities of stabilizers and additives. Nitroglycerin serves as both the gelatinizing agent and a fuel in these compositions. In addition to the nitroglycerin, small quantities of dibutylphthalate, dibutylphthalate, or triacetin are compounded to enhance colloidal suspension of the nitrocellulose. The stabilizing agents for double-base compositions do not differ from the stabilizers common to single-base systems. However, the metallic additives for double-base systems may include barium or potassium nitrate, calcium sulfate, calcium carbonate, or lead stearate in addition to the metallics used in single-base compositions.

The relative concentrations of these components in propellants varies depending upon the intended end use. In general, nitrocellulose is the predominant constituent and is present in concentrations of 50 to 70%. Nitroglycerin is the second largest constituent in the propellant composition. These two compounds constitute greater than 95% of the standard military double-base formulations. The addition of inerts and stabilizers provides the balance to greater than 99% of the formulation, with less than 1.0% of the formulation composed of various nitrates or lead stearate.

Composite propellants consist of ammonium nitrate, an inorganic oxidant such as potassium nitrate, and an organic binder. These propellants are heterogeneous solids that may be press formed to the desired shape. Composite formulations are not handled at the 20,000-Pound OD Unit.

Although the term "colloidal suspension" has been applied to propellants, these compositions are completely solid without free liquids. Physically, propellant compositions consist of powders that are incorporated into solid or waxlike binders and pressed into strips, cords, and other linear shapes. Although dry nitrocellulose is unstable, incorporation of the binders renders the mixture relatively stable. Propellants, including double-base formulations, are not sensitive to shock and cannot be ignited by ordinary shock or frictional effects. Propellants are sensitive to electric spark only if the material has been finely divided and is present as dust. Thus, propellants present a fire hazard to the degree that a sufficiently strong heat source is available to ignite the composition. Unless finely divided, ignition usually requires either open flame or detonation of a high explosive placed adjacent to the propellant material.

The composition of commonly utilized single-base and double-base propellants is provided in Table B-1. Specific propellants that have been, and will be thermally treated at the 20,000-Pound OD Unit are discussed in a future section.

Nitroglycerin has been discussed previously in conjunction with propellants. In pure form, nitroglycerin is a colorless liquid with a molecular weight of 227 that fuses to the solid state at approximately 13°C. The specific gravity of nitroglycerin is 1.5962, and the liquid viscosity is 36 Centipoise at 20°C. Nitroglycerin decomposes with gas evolution at temperatures of 145°C. The published explosion temperature for nitroglycerin is 222°C, with evolution of approximately 368 Kcal/mol of heat and 715 mL of gas per gram of charge. Nitroglycerin is extremely sensitive to shock, being detonated by a 2 kg weight dropped from a height of 16 cm in the Bureau of Mines reactivity tests. For this reason, nitroglycerin is compounded with other energetics or inerts to facilitate handling. In pure form, it may be absorbed through the skin into the circulatory system and causes increased pulse rate and blood pressure.

Nitrocellulose is a mixture of esters formed by the nitration of cellulose with a mixture of sulfuric and nitric acids. As used in military formulations, nitrocellulose contains a minimum of 12.2% nitrogen. Although nitrocellulose is not truly soluble in any solvent, certain alcohols, ketones, and aromatic nitrocompounds will disperse nitrocellulose as a colloidal suspension. Water has no solvent action upon nitrocellulose, but is absorbed to between 2 and 3%, with the resultant deterioration to the unstable form. Cellulose nitrate has a specific gravity of 1.65. The explosive temperature for cellulose nitrate is approximately 230°C with evolution of 661 Kcal/mol of heat upon combustion or 272 Kcal/mol of heat upon detonation that is accompanied by evolution of approximately 700 mL of gas per gram charge. Nitrocellulose is extremely sensitive to spark ignition if handled in dry form. The shock sensitivity of nitrocellulose is greater than that of nitroglycerin and is listed as detonation by a 2 kg weight dropped from a height of 9 cm in the Bureau of Mines test.

Table B-1 Standard Compositions (%) for Single - or Double-Base Propellants

	M-1 (a) Single Base	M-3 Single Base	M-14 Single Base	Double Base Common	Double Base Calibers 20, 30, 50	Double Base Mortar Repellant	Double Base Rocket Propellant M-Series	Double Base Rocket Propellant T-Series
Nitrocellulose	84.2	79	89.1	77 – 81	74 – 84	52 – 57	55 – 58	58
Nitroglycerin				15 – 19	15 – 20	40 – 43	30 – 40	22 – 40
Barium/Potassium Nitrate				2.1	0.0 – 1.5	1.25 – 1.5		
Potassium Perchlorate							0.0 – 7.8	
Graphite				0.3	0.0 – 0.25			
Dinitrotoluene	9.9	15	7.9					0.0 – 2.5
Trinitrotoluene								
Diphenylamine					0.75	0.75	1.0 – 8.0	1.75 – 8.0
Diethylphenylamine				0.6		0.0 – 0.6		
Potassium Sulfate							0.0 – 1.5	0.0 – 1.5
Tracetin		5	2.0					
Dibutylphthalate	4.9		1.0			3.0		
Cryolite	1.0	1.0						

WASTE IN CONTAINERS

All waste that will be treated at the 20,000-Pound OD Unit will be transported to the treatment area in the original product container or other appropriate packaging. Propellants are contained within chambers that are generally cylindrical in shape and constructed of aluminum and steel. A primary consideration in the development of propellant, explosive, or pyrotechnic systems is long-term storage stability, which requires compatibility of container and the energetic material.

Receipt of the waste in the product container, combined with the fact that commonly used military propellants are compatible with one another, ensures that incompatible wastes are not mixed. The reactive wastes to be treated at the 20,000-Pound OD Unit are solid in nature and contain no free liquid.

B.2 WASTE CHARACTERISTICS

This section addresses the characteristics of the waste that must be known for proper management of the waste. This information is derived from published sources. Analysis to support the published data is not required because of the limited deviation allowed within the product specifications that manufacturers of military propellants must follow. The waste that is treated at the 20,000-Pound OD Unit has essentially the same composition as serviceable propellants, but is being disposed of because of shelf-life exceedance, deterioration during storage, or failure to complete exhaust during testing of motors.

In general, the characteristics of the waste that must be known are:

- Presence of free liquids,
- Basis for hazard designation,
- Waste composition,
- Ignition or explosion temperature,
- Heat of combustion and/or detonation,
- Sensitivity to shock or electrical ignition,
- Storage stability (tendency to decompose during storage),
- Compatibility with container or other energetic material, and
- Solubility characteristics.

It must be noted that the unique nature of these materials presents difficulties in development of these data in all instances. In some instances, the parameters are not readily measured because of the instability of the material. For many energetic materials, the particle size, degree of subdivision, compressed density of the material in the ordnance, age, and atmospheric conditions affect the value derived for these parameters. The same material may provide different values for certain parameters for no apparent reason. Thus, the published data presented in this section represent the accepted values for those parameters derived from various tests.

Table B-2 identifies all explosive compounds and other substances that will be used or treated at the 20,000-Pound OD Unit. As shown in Tables B-1 and B-2, several explosive materials are used in a variety of combinations to manufacture explosives and propellant devices. All of these

explosives are solid materials that do not contain liquids. The main explosive materials and a description of each are as follows:

Table B-2 Explosive Compounds Used or Treated at the OD Unit

Name	Chemical Formula	Use
AMATOL	(ammonia nitrate/TNT)	main charge, armor piercing projectiles
AMMONAL	(ammo nitrate/TNT/Al)	main charge, semi-armor piercing bombs
AMMONIUM NITRATE	NH_4NO_3	main charge, cratering charge
BALLISTITE	(nitrocellulose/nitroglycerin/ diphenylamine/graphite)	propellant, rocket motors
BARATOL	(TNT/barium nitrate)	main charge
BLACK POWDER	(potassium nitrate/charcoal/sulfur)	propellant, mixtures
COMP A	(RDX/wax)	boosters, fuzes
COMP B	(RDX/TNT/wax)	main charge, projectiles, bombs, warheads
COMP C-4	(RDX/oil/polyisobutylene/ diethylhexylsebacate)	demotion charge
CYCLOTRIMETHYLENE TRINITRAMINE (RDX)	$C_3H_6N_6O_6$	mixture, detonators, demo charges
DBX	(ammo nitrate/RDX/Al)	main charge, depth bombs
DIAZODIN1TROPHENOL (DDNP) (DINOL)	$HOC_6H_3(NO_2)_2N$	blasting caps, detonators
DOUBLE BASE SMOKELESS POWDER	(guncotton/nitroglycerin)	propellant
EXPLOSIVE D (AMMONIUM PICRATE)	$NH_4C_6H_2N_3O_7$	bursting charge, armor piercing projectiles
GUNCOTTON	(nitrocellulose)	propellant
HEXANITE #26	(TNT/HND/Al)	main charges
HEXITE (HEXANITRO-DIPHENYLAMINE)	$C_{12}H_5N_7O_{12}$	mixtures
HMX	$C_4H_8N_8O_8$	mixtures, boosters
H-6	(RDX/TNT/A1/CaCl)	main charges, naval bombs, depth charges
HTPB (HYDROXY-TERMINATED POLYBUTADIENE)	HO-(C H) –OH	solid fuel propellant
LDNR	$PbC_6H_2N_2O_6$	blasting caps
LEAD STYPHNATE	$C_6H(NO_2)_3(O_2Pb)$	initiators, primers, detonators
MANNITOL HEXANITRATE	$C_6H_8(NO_3)_6$	initiators, blasting caps
MERCURY FULMINATE	$HgC_2N_2O_2$	initiators, blasting caps

Name	Chemical Formula	Use
MINOL	(TNT/ammo nitrate/Al)	main charges, bombs, projectiles
NITROGLYCERIN	$C_3H_5(ONO_2)_3$	propellant compositions
PENTOLITE	(TNT/PETN)	bursting charges
PETN	$C(CH_2ONO_2)_4$	mixtures, boosters, detonating cord
PICRATOL	(Explosive D/TNT)	main charges
PICRIC ACID #26	$C_6H_2(NO_2)_3OH$	boosters, bombs
PICRITE	$CH_4N_4O_2$	propellant
TETRYL	$(NO_2)_3C_6H_2N(NO_2)CH_3$	mixtures, boosters
TNPH	$C_6H_2(NO_2)_3C_2H_5$	mixtures, boosters, (sub for TNT)
TORPEX	(RDX/TNT/Al)	main charges, mines, torpedoes
TNT	$C_6H_2CH_3(NO_2)_3$	main charges, demo charges, boosters, mixtures
TRITONAL	(TNT/Al)	main charges, bombs
TYPE 88 #26	(ammonium perchlorate/ferro-silicon/ wood meal/crude petroleum)	main charges
TYPE 91 #26	$C_6H_2OCH_3(NO)_3$	main charges
TYPE 92 #26	(TNT/Al)	burster for Japanese bullets
TYPE 98	(trinitroanisol/hexanitro-diphenylamine)	primer, burster charge
TNA	$C_6H_3N_5O_8$	boosters
OCTOL	(HMX/TNT)	main charge, shape charges
METHYL PICRATE	$C_6H_2OCN_3(NO_2)_3$	main charge, bombs
POTASSIUM PERCHLORATE	$KClO_4$	pyrotechnic, fireworks
PHOTO FLASH POWDER	(barium nitrate/potassium perchlorate/Al)	ground burst simulators, photo bombs and projectiles
THERMITE	Fe_2O_32Al	grenades, document destroyers
THERMATE	Fe_2O_3 Al + Ba nitrate	document destroyers
HC SMOKE	ZnO_2C_6Cl Al	screening smoke
TITANIUM TETRACHLORIDE	$TiCl_4$	spotting charges
WHITE PHOSPHORUS	P_4	screening/marking smoke
PLASTICIZED WHITE PHOSPHORUS	P_4 + synthetic rubber	marking smoke

Black Powder

Black powder is the oldest known explosive material. It is a composite material made from saltpeter (potassium nitrate), charcoal, and sulfur. It is a lower powered explosive and is commonly used in time fuses, igniters, and detonators.

Ammonium Nitrate

Ammonium nitrate is the least sensitive of military explosives and must be initiated by a booster charge to ensure successful detonation. Ammonium nitrate is commonly used in composite explosives where it is combined with a more sensitive explosive. Ammonium nitrate is highly hygroscopic (readily absorbs moisture) and must be kept in a waterproof container.

Amatol

Amatol is a mixture of ammonium nitrate and TNT that is commonly used as a substitute for TNT in bursting charges. The most common mixture of amatol is 80/20 (80% ammonium nitrate and 20% TNT). Because of its ammonium nitrate content, Amatol is highly hygroscopic and must be kept in a waterproof container.

Military Dynamite

Military dynamite is a composite explosive that contains 75% cyclotrimethylene trinitramine (RDX), 15% TNT, and 10% desensitizers and plasticizers. Military dynamite is considerably more stable than commercial dynamites due to the absence of nitroglycerin.

Trinitrotoluene (TNT)

TNT is the most commonly used military explosive. It is used alone or in conjunction with other explosives for composite explosives. TNT is commonly used for boosters, bursting charges, or demolition charges.

Tetryl

Tetryl is commonly used alone as a booster charge. It can also be used as a bursting or demolition charge and, at times, can be used in composite charges. Tetryl is more powerful and more sensitive than TNT. Tetryl explosives are being replaced with RDX and PETN explosives due to the increased power and shattering effects of these two latter explosives.

Pentolite

Pentolite is a mixture of PETN and TNT. The most common mixture of pentolite is 50% PETN and 50% TNT. This explosive is very powerful, has a high detonation rate, and is used in certain shaped charges.

Nitroglycerin

Nitroglycerin is a highly powerful explosive and is comparable to RDX and PETN. It is commonly used as the base material for commercial dynamites. Nitroglycerin is highly sensitive and is affected by extreme temperatures. Due to its sensitivity, nitroglycerin is not typically used as a military explosive.

<u>Composition B</u>

Composition B is a composite explosive containing 60% RDX and 39% TNT, and is wax. Because of the high RDX content, Composition B is more sensitive than TNT and is primarily used as the main charge in shaped charges.

<u>Composition C-4</u>

Composition C-4 is a composite explosive containing 91% RDX and 9% nonexplosive plasticizers. Composition C-4 is very stable over a wide range of temperatures and is only slightly water soluble. This explosive is used mainly as a bursting charge.

Composition C-3

Composition C-3 is a composite explosive containing 91% RDX and 9% wax. The wax coats the RDX particles and acts as a desensitizer, as well as a binder material. Composition C-3 is used as a booster charge in newer charges and torpedoes, as well as in high explosive plastic projectiles.

Pentaerythrite Tetranitrate (PETN)

PETN is very sensitive and is one of the most powerful military explosives. PETN is used in boosters, detonating cords, blasting caps, and in composite explosives. PETN is not water soluble.

Cyclotrimethylene trinitramine (RDX)

RDX is very sensitive and, like PETN, is one of the most powerful of military explosives. It is often used alone as the base charge in M6 (electric) and M7 (non-electric) blasting caps. RDX can also be desensitized and used for sub-boosters, boosters, bursting charges, and demolition charges. RDX is commonly used in the manufacture of Composition A, B, and C explosives.

Composition B-4

Composition B-4 is a composite explosive that is very similar to Composition B with 60% RDX, 39.5% TNT, and 0.5% calcium sulfate. This explosive is used in newer shaped charges and bangalore torpedoes.

The composition of specific propellant devices that have been treated at the 20,000-Pound OD Unit, and that are expected to require continued treatment, is provided in Table B-3. Additives to the double-base propellant compositions are also identified in Table B-3. Single-base or composite propellants are not thermally treated at the 20,000-Pound OD Unit. In addition to the specific formulations for the propellants, Table B-3 identifies the components present in primer compositions or the initial detonating agents associated with these energetic items. The primer is not always treated in conjunction with the propellant. Table B-4 presents data on the characteristics of the constituent used in these propellants. Data on the explosive train (that is serviceable ordnance, and not waste) are also presented in these tables.

Three waste characteristics relevant to proper handling and treatment are not addressed in these tables: (1) the presence of free liquids, (2) compatibility of these wastes with the container, and (3) compatibility with other energetic materials. As previously indicated, the energetic compositions used for these military applications contain no free liquid and consist of finely divided powders or wax-like materials compressed to a variety of shapes. These wastes are managed in the original product container, and the materials of the casing were specifically selected at the time of design to be compatible with the energetic material to ensure longevity during storage. Thus, further consideration of these compatibility concerns is not warranted and is prohibitive because of the dangers inherent in any attempt to re-package these materials. Furthermore, these wastes are not re-packaged or stored at the unit. The energetic formulations that are thermally treated at the 20,000-Pound OD Unit are mutually compatible as demonstrated by the fact that these materials are often blended together in a single formulation or conjointly packaged in a single device. In addition to their mutual compatibility, the energetic materials are not removed for blending purposes and, therefore, mixing of incompatible wastes does not occur.

Although some limited data concerning reactivity toward water and other reagents are provided in this section, the wastes treated at the 20,000-Pound OD Unit are not mixed with any reagents incidentally or to effect treatment. Such data are provided solely for informational purposes.

The shock sensitivity of energetic materials may be determined by the Bureau of Mines impact test. The shock sensitivity data provided in this section are based on the Bureau of Mines method.

In practice, this method involves placement of 0.02 gram of the subject material in a brass cup that is subsequently impacted by a 4-kilogram weight dropped from a measured height. Sensitivity is recorded as the height required to initiate detonation in one of ten tests.

Sensitivity to friction is measured by the pendulum test. In this method, a specifically weighted bare-metal shoe is attached to a pendulum designed to pass in contact with a grated anvil containing 7.0 grams of energetic materials 18 times during the test. This sensitivity test is utilized less often than impact and is, therefore, not reported.

Heat and electrical spark sensitivity are determined by several techniques. The most reliably reported data are the explosion temperature as determined by submersion of the subject material in a vat of heated bismuth alloy. Both the explosion temperature and any separately noted spark sensitivity data from energetic materials are reported in this section.

B.3 WASTE ANALYSIS RATIONALE

This section addresses the parameters of concern for waste that will be treated at the 20,000-Pound OD Unit. The rationale for the selection of these parameters, sampling methods, analytical protocols, and frequency of analysis are described. Parameters and rationale for characterization of waste are discussed below in sections that cover predetonation and postdetonation, respectively.

Holloman AFB has never been used for the research and development of nuclear, chemical warfare, or other exotic warfare types of weapons. The OD Unit is used solely for the disposal/treatment of conventional waste-ordnance, munitions, incendiaries, propellants, and rocket motors. The only munitions delivered or disposed of at Holloman AFB have been conventional live and training munitions. Therefore, the chemical components and combustion by-products are consistent with typical materials for military munitions items; thus, the emphasis of sampling and analysis for the 20,000-Pound OD Unit will be to search only for the constituents present in these types of wastes.

The nature of the treatment by-products is dependent upon the category of device from which the waste is derived. Propellant constituents will be converted largely to the gaseous products CO_2, CO, H_2O, N_2, and, to some degree, NO_x. Some extremely limited possibility exists that these materials may fail to entirely decompose.

The nitrate oxidant from primers or detonators will convert to sodium or potassium nitrite ($NaNO_2$, KNO_2). Other oxidants are converted to the oxide. Fuels such as antimony sulfide or thiocyanate are converted to the oxide or sulfate.

Table B-3 Composition of Specific Propellants Thermally Treated at the OD Unit (also included is the RDX detonator)

Component	Constituent*	Mass or Concentration Weight %
Rocket motor (5.0 inch)*	Nitrocellulose Nitroglycerin Diphenylamine Potassium Sulfate	11.8 kg 8.2 kg 0.6 kg 0.3 kg
Rocket motor (2.7 inch)*	Nitrocellulose Nitroglycerin Diphenylamine Potassium Sulfate	2.0 kg 1.5 kg 0.3 kg 50 grams
Propellant detonator (not always present)	Barium or Potassium Nitrate Lead Styphnate or DDNP Carbon Calcium Silicide	0.45 – 0.60 gram 0.20 – 0.40 gram 0.01 – 0.10 gram 0.10 gram
C-4 Detonating Charge (a,b) (size varies)	RDX Wax (polyisobutylenetethlhexyl-sebacate)	
Initial detonator cap (a) (for C-4 charge used in detonation)	Lead Styphnate Lead Azide Trinitrophenylmethylnitramine Mercury Fulminate Diazodinitrophenol (DDNP) Tetracene	0.55 – 2.5 gram 0.05 – 0.26 gram 0.1 – 0.2 gram 0.18 – 0.24 gram 0.12 – 0.28 gram 0.18 – 0.24 gram
Explosive priming cap (b) (for C-4 charge used in detonation)	Potassium Chloride Antimony Sulfide or Lead Thiocyanate Lead Azide, PETN, or DDNP	0.05 – 0.05 gram

(a) Primer components (oxidant/fuel) are indicated in C-5.
(b) Inerts include diphenylamine, potassium sulfate, and wax, and were not considered.
* May contain up to 2.5% Dinitrotoluene, but does not meet listing criteria and is present only as an appendix VIII hazardous constituent.
NOTE: The C-4 charge and its primary charges used for detonation are not wastes, but are serviceable ordnance used to initiate the reaction.

Table B-4 Characteristics of Constituents in Propellants or Explosives Thermally Treated at the OD Unit

	Explosion Temperature (°C)	Heat of Detonation	Heat of Combustion (Kcal/mol)	Gas Volume on Detonating	Impact Sensitivity (cm)	Spark Sensitivity	Storage Stability	Solubility (mg/L)
Nitrocellulose	230	272	661	700	9	High	Hydrolysis	Insoluble Hygroscopic (3%)
Nitroglycerin	222	337	368	715	16	Moderate	Stable	1600
RDX	260	285	507	908	32	Moderate	Stable	50
PETN	215	439	600	790	17	Sensitive	Stable	Unknown
Lead Azide	340	106	183	0.3308	10	Sensitive	Stable	500
Lead Styphnate	282	15213	585	368	17	Sensitive	Stable	1000
Tetryl	257	324	839	760	26	Sensitive	Stable	75
Mercury Fulminate	210	122	267	243	5	Sensitive	Stable	700
DDNP	195	172	681	865	10	Sensitive	Stable	Insoluble
Barium Nitrate	NA	NA	NA	NA	NA	NA	Stable	8.7×10^4
Potassium Nitrate	NA	NA	NA	NA	NA	NA	Stable	1.3×10^4
Potassium Chlorate	NA	NA	NA	NA	NA	NA	Stable	7.1×10^4
Antimony Sulfide	NA	NA	NA	NA	NA	NA	Stable	1.7
Lead Thiocyanate	NA	NA	NA	NA	NA	NA	Stable	500

The sampling and analysis plan outlined in Permit Attachment H focuses on solid reaction products because of the hazards associated with plume sampling in the vicinity of the treatment zone.

PARAMETERS AND RATIONALE (PRE-DETONATION)

Waste analysis will not be performed prior to the treatment of these wastes. Sampling prior to treatment would greatly increase the potential for accidental detonation, with resultant property damage and personal injury, that such efforts are not warranted. The containers that hold these energetic materials (product or waste) are sealed in accordance with exceedingly specific manufacturing specifications designed to prolong storage stability and reduce the potential for unplanned detonation or ignition from impact. For example, nitrocellulose propellant mixtures are hygroscopic to 3 to 4 weight percent if exposed to moist air. The hydrolysis that accompanies exposure of nitrocellulose to air (even at low relative humidity values) renders the material unstable, and evolution of NO_2, or auto combustion occurs. Dismantling of the devices (that would be required for sampling) not only increases hazard by exposure of material but also increases the potential for detonation due to the friction and shock sensitivity of the materials.

Additionally, the composition of these materials is well defined on the basis of published literature and tightly controlled manufacturing specifications. Thus, these materials are analogous to pure discarded commercial products for which sampling would only prove redundant. Prior to treatment of any waste not specifically identified in earlier pages, a complete listing of all ingredients common to that energetic item will be obtained to determine its suitability for treatment in the 20,000-Pound OD Unit.

The use and handling of these materials is tightly controlled and the device is sealed; therefore, the possibility of mixing unspecified items with the energetic materials does not exist. No other wastes are treated in conjunction with these devices in the 20,000-Pound OD Unit because joint treatment is specifically prohibited by Technical Orders.

PARAMETERS AND RATIONALE (POST DETONATION)

Post treatment analysis of residuals presents less risk to sampling and analytical personnel than attempts to perform predetonation sampling because successful treatment renders the waste non-reactive. Thermal treatment of propellants converts the alkoxynitrates to gaseous products. However, because it is technically impractical to sample evolved gas in the treatment zone, the focus of this plan is the solid residuals that may remain in the pit.

Permit Attachment H contains a detailed Sampling and Analysis Plan (SAP) that covers all aspects of post-detonation waste sampling at the 20,000-Pound OD Unit. Specific topics covered in the SAP include sampling approach and rationale, sampling procedures and methodology, health and safety procedures, sample handling and chain of custody (COC), sample documentation, laboratory procedures, quality assurance/quality control (QA/QC), and data evaluation methods.

B.4 SUMMARY OF ANALYTICAL METHODS AND SAMPLING FREQUENCY

Samples of the solid residuals and underlying soils will be prepared and analyzed according to protocols from the current edition of the EPA Publication SW-846, *Test Methods for Evaluating Solid Waste*. Samples, will be analyzed for all toxic metals, including priority pollutant metals (listed in the New Mexico Hazardous Waste Management Regulations 20.4.1.500 NMAC (Part 264 Appendix IX), explosive residues, and soil moisture. Permit Attachment H, Sampling and Analysis Plan, contains the specific test methods and lists of analytes that will be measured, as well as the rationale for their selection. In addition, details of laboratory protocols and quality assurance/quality control procedures are also discussed in the Sampling and Analysis Plan.

Samples of the treatment residuals and underlying soils will be taken annually to demonstrate the effectiveness of the treatment and to ensure that hazardous wastes are not present. This frequency was selected to ensure effectiveness of treatment and prevent storage of hazardous waste in the area. A stratified random sampling methodology will be used to collect representative samples, as explained in detail in the sampling methodology.

DRAFT
ATTACHMENT C

INSPECTION SCHEDULE

HOLLOMAN AIR FORCE BASE
OPEN DETONATION TREATMENT UNIT

Permit No. NM6572124422

ATTACHMENT C
INSPECTION SCHEDULE

INTRODUCTION

The information in this attachment addresses requirements contained in the New Mexico Administrative Code (NMAC), Title 20, Chapter 4, Part 1, Subpart IX (20.4.1.900 NMAC), incorporating Title 40 Code of Federal Regulations (CFR) §§270.14(b)(5) and 20.4.1.500 NMAC, incorporating 40 CFR §§264.15, and 264.602. In accordance with §264.15(a), the 20,000-Pound Open Detonation (OD) Unit is inspected for malfunctions, deterioration, operator errors, and discharges that may cause or lead to a release of hazardous waste constituents to the environment or a threat to human health.

The complexity and special nature of the activities conducted at Holloman Air Force Base (HAFB) result in delegation of responsibility for general inspection requirements among various groups. Corrective action for deficiencies found during these routine inspections, repair and preventive maintenance of various items of equipment, and maintenance of inspection records are also delegated among these various groups. Among the areas covered by the routine inspection and maintenance activities are:

- Fire Control Equipment: fire extinguishers, pump truck equipment (pumps, hoses, horns and sirens, etc.), fire alarms, and self-contained apparatus.
- Emergency Equipment: protective clothing, safety glasses, face shields, emergency eyewashes, chemical respirators, etc.
- Security Equipment: facility lighting, signs, etc.
- Structures: road surfaces, vegetation-free zones, fireboards.
- Communication Systems: radios, base intercom, base evacuation system, etc.
- Vehicular Equipment: transport vehicles.

C.1 INSPECTION SCHEDULE

In accordance with §264.15(b)(1), an inspection program has been established to routinely inspect all components of the treatment units for malfunctions, deteriorations, signs of contaminant release that indicate potential for migration of hazardous waste constituents to the environment, or the potential for human endangerment. These inspections are performed prior to treatment, after treatment, and at regular intervals during inactivity to permit the use of corrective measures that will minimize such problems.

Vehicles used to transport demolition materials, explosives, and personnel are inspected daily, and inspections documented on Air Force (AF) Form 1800.

In accordance with §264.15(b)(2), Table C-1 presents an example inspection schedule for inspecting safety and emergency equipment, security devices, structural equipment, communications equipment, mobile equipment, and range areas. Also listed is inspection of the

clear zones around these units for vegetation. Clearing operations of the natural vegetation are then based on these inspections.

C.1.1 TYPES OF PROBLEMS [20.4.1.500 NMAC §264.15 (b)(3)]

The inspections schedule identifies the types of problems (e.g., malfunctions or deteriorations) that are checked during inspections.

C.1.2 FREQUENCY OF INSPECTION [20.4.1.500 NMAC §264.15(b)(4)]

Inspection of all materials, security devices, safety equipment, and communication devices will be performed before each explosive ordnance disposal (EOD) operation. This frequency of inspection will determine equipment deteriorations and malfunctions between inspections.

The inspection schedule used for the OD Unit is provided as Table C-1. This inspection plan addresses unit-specific structures, emergency equipment, operational equipment, safety equipment, communications systems, transport vehicles, and the treatment zone (including the cleared area).

C.1.3 REMEDIAL ACTION [20.4.1.500 NMAC §264.15(d)]

If inspections reveal that nonemergency maintenance is needed, then HAFB personnel will initiate immediate action(s) to preclude further damage and reduce the need for emergency repairs. If a hazard is imminent, or has already occurred during the course of an inspection, or any time between inspections, then remedial action will immediately be taken. Appropriate authorities will be notified according to the 20,000-Pound OD Unit Site Contingency Plan, Permit Attachment E. In the event of an emergency involving the release of hazardous constituents to the environment, efforts will be directed towards containing the hazard, removing it, and subsequently decontaminating the affected area as outlined in the Site Contingency Plan. The general nature of the remedial action to be taken will be noted in the Inspection Log.

C.1.4 INSPECTION LOG

A log will be kept to record inspection findings at the OD Unit as specified in Technical Orders 11A-142. The log includes spaces for the date of the inspection, identity of the inspector, and the specific items to be inspected and provides for records of remedial action. The inspection logs are maintained at the EOD office for a period of three years in accordance with §264.15(d).

Table C-1 General Inspection Schedule and Checklist

Area/ Equipment	Specific Item	Types of Problems	Frequency of Inspection
Safety and Emergency Equipment	Face shields and extra protective eyeglasses	Broken and dirty equipment	Monthly
	Disposable respirators	Out of stock, not required, filter types for materials being handled.	Monthly, as needed
	Fire extinguishers (Min.=2)	In need of recharging	Monthly/after each use
	Vehicular radio; handheld radio	Inoperable	As used
	First aid equipment and supplies	Items out of stock or inoperable	As used
	Protective clothing (impermeable full body coveralls, gloves, and foot coverings	Holes, thin areas, tears	As used
Security Devices	Signs	Illegible	Monthly
EOD Vehicle	Brakes	Worn pads and rotors	Prior to each treatment
	Hydraulics	Leaking	Prior to each treatment
	Horns/sirens	Inoperative	Prior to each treatment
	Trailer hitches	Loose and missing safety chains	Prior to each treatment
	General purpose tool kit	Items missing and damaged	Prior to use
	Pioneer tool kit	Items missing and damaged	Prior to use
	Demolition ordinance/initiation agents	Non-serviceable, exceeds shelf life, damaged, corroded, deteriorated	Weekly, prior to use
Treatment Zone	Waste items	Inventory reconciliation	Prior to transport or treatment
	Residuals	Scattered, free-standing liquids	After treatment
	Clear zone/general area	Vegetation, burrowing, corrosion, signs of runon/runoff	Monthly
	Firebreak	Vegetation, scrap, debris	Monthly

DRAFT
ATTACHMENT D

PERSONNEL TRAINING

HOLLOMAN AIR FORCE BASE
OPEN DETONATION TREATMENT UNIT

Permit No. NM6572124422

ATTACHMENT D
PERSONNEL TRAINING

INTRODUCTION

This attachment provides information on the training program for Explosive Ordnance Disposal (EOD) personnel at Holloman Air Force Base (HAFB) in accordance with the requirements of New Mexico Administrative Code, Title 20, Chapter 4, Part 1, Subpart V (20.4.1.500 NMAC), incorporating Title 40 Code of Federal Regulations (CFR) §264.16 and 20.4.1.900 NMAC, incorporating 40 CFR §270.14(b)(12).

The objective of the HAFB training program for EOD personnel is to ensure that operations are conducted in a safe manner and to ensure the facility's compliance with the requirements of §264.16. Facility personnel who handle hazardous wastes must successfully complete a program of classroom instruction and on-the-job-training in order to prepare them to operate and maintain the facility/unit in a manner that ensures the facility's compliance with Resource Conservation and Recovery Act (RCRA) training requirements.

D.1 TRAINING PROGRAM

The Air Force EOD Supervisor has overall responsibility for training of EOD personnel. Training for EOD personnel includes formal classroom instruction, on-the-job training, and written procedures and plans.

D.1.1 JOB TITLE/JOB DESCRIPTION

In accordance with §§264.16(d)(1) and (2), the EOD office maintains records of each job title related to hazardous waste management at the 20,000-Pound Open Detonation (OD) Unit, a list of employees for each title, and a job description for each job title.

D.1.2 TRAINING PROGRAM CONTENT AND FREQUENCY

Due to the nature of the operations at the OD Unit, personnel involved in treatment operations at the OD unit are required to have training in the following areas:

- EOD Operations
- Hazardous Waste Management

<u>EOD Training</u>

All HAFB EOD personnel attend the Explosive Ordnance School at Eglin Air Force Base in Florida. Explosive Ordnance School incorporates hazardous waste management training for the specific wastes that are treated in the unit. This is the single training point for all military personnel in the EOD career field. Senior EOD personnel also support this training with on-the job training and close supervision. All EOD personnel must pass the basic course, and supervisory personnel must pass two additional advanced courses. All EOD personnel are required to complete annual reviews of the basic course.

An outline of the EOD course is provided in Table D-1 at the end of this attachment.

Hazardous Waste Management Training

All EOD personnel responsible for management and operations at the 20,000-Pound OD Unit are required to complete the RCRA training program offered at HAFB. The course outline is provided as Table D-2.

Personnel responsible for management and operations at the OD Unit are required to complete the training within six months after assignment to the facility.

D.1.3 TRAINING SUPERINTENDENT

The HAFB EOD superintendent is responsible for ensuring that assigned personnel receive adequate training in handling potentially hazardous wastes. Training superintendents at the EOD school at Eglin Air force Base are highly trained career specialists who provide the EOD training for all Department of Defense (DoD) personnel. The EOD and training directors at the EOD school have the training and experience required for their respective positions as required by §264.16(a)(2).

D.1.4 JOB TITLES AND DUTIES [20.4.1.500 NMAC §264.16 (d)(2)]

EOD supervisory personnel at HAFB are directly responsible for the proper handling of explosive ordnance. The duties, responsibilities, and qualifications for various positions are maintained at the EOD office. The position description for the EOD supervisor is presented below:

Air Force EOD Superintendent

Responsibilities: Directs the operations at the EOD section at HAFB. The EOD superintendent provides assistance and guidance on explosive ordnance disposal and management at the EOD areas.

Duties: The HAFB EOD Superintendent plans, coordinates, and directs all EOD operations at HAFB. Interprets regulations and develops necessary operating procedures as required. Determines requirements for manpower, space, and equipment and initiates actions required. Determines the need for modifications to existing facilities and initiates action to improve economy, efficacy, safety, and physical security of operations. Develops appropriate requirements and initiates requests for work.

Personal contacts: Maintains personal contacts with local and state government agencies and military commands.

Work assignment and review: Assigns work to subordinate employees or supervisors based on priorities. Makes decisions on work problems referred by subordinate supervisors. Ensures that workload and project responsibilities are specifically delegated and assigned to subordinates.

D.1.5 RELEVANCE OF TRAINING TO JOB POSITION

The EOD superintendent personnel who will be responsible in case of an emergency has been trained in handling explosive ordnance and potentially hazardous waste and in responding to emergency situations. Each has attended the EOD school course at Eglin Air Force Base. Completion of the RCRA training course outlined in Table D-2 is also required. The training is designed to ensure that personnel are able to respond effectively to emergencies and are familiar with emergency procedures, emergency equipment, emergency systems, and Contingency Plan implementation.

D.1.6 IMPLEMENTATION OF THE TRAINING PROGRAM

The EOD superintendent and EOD Unit Program Manager will ensure that all EOD personnel have met the training requirements within six months of their assignment at the facility. Training records for both the EOD and RCRA portions of the program are maintained at the EOD and 49 CEV/CES.

Annual reviews and updates are required for both the EOD and hazardous waste management portions of the program. Records that specify the job title, duties, and progression in the training programs are maintained at the EOD administrative offices. These records are maintained during tenure of the personnel at HAFB.

Table D-1 EOD Training Program Outline

I. Explosive Ordnance Disposal (EOD) Specialist/Technician Career Field:

A. Progression in career ladder 464X0 B. Duties of Air Force Specialty Codes (AFSCs) 46430/50/70

B. History of Air Force EOD Program

II. Security:

A. Communications Security (COMSEC)

(1) Classify information and use MAJCOM/Special Operations Aviation Essential Elements of Friendly Information (SOA EEFIs)

(2) Prevent security violations

(3) Observe security precautions

B. Operations Security (OPSEC)

(1) Background and history of OPSEC

(2) Definition of OPSEC

(3) Relationship of OPSEC to other security programs including COMSEC, Information Security, and Physical Security

(4) Common OPSEC vulnerabilities

(5) OPSEC significance of unclassified data and procedures

(6) Specific OPSEC vulnerabilities of AFSC 3E8X1

C. Security Requirements for EOD Publications

(1) Storage requirements

(2) Control/access procedures

(3) Destruction/disposition requirements

(4) Transportation requirements

(5) Security deviation reporting

D. Protection of firearms and munitions

III. Air Force Occupational Safety and Health

A. The U.S. Air Force (USAF) program

B. Hazards of AFSC 3E8X1

C. Air Force Occupational Safety and Health (AFOSH) Standards for AFSC 3E8X1

D. Use of personal protective equipment

E. Fire prevention

F. Nuclear surety

G. Mishap reporting and investigation

IV. Publications

A. USAF administrative publications

B. USAF technical orders (TO)

(1) USAF TO system

(2) Use indexes Noted Information and Restricted Issues (NI & RI)

(3) Locate desired information

(4) Use task orders when performing tasks

(5) Establish and maintain task order files

(6) Initiate task order improvement reports

(7) Requisition task orders

C. Use Technical Order Management (TOM) sub-module for posting and tracking USAF TOs

V. Participate in USAF Graduate Evaluation Program

VI. EOD Flight Management

A. EOD unit management

(1) Organizational structure

(2) Functions and responsibilities

B. Inspection system

C. Material deficiency reporting

VII. Applied Principles of Physics

A. Properties of matter

B. Laws of motion

C. Simple machines

D. Measurement systems

(1) English

(2) Metric

(3) Conversion from one system to another

VIII. Fundamentals of Electricity

A. Demolition circuitry

B. Perform grounding procedures

C. Apply electromagnetic radiation precautions

IX. EOD Tools and Equipment

A. Maintain tools

B. Common hand tools

(1) Select proper tools

(2) Use tools properly

C. Special tools and equipment

(1) Select proper tools

(2) Use tools properly

D. EOD Mark (MK)-Series tools

(1) Select proper tools

(2) Use tools properly

E. Use the RIC sub-module for equipment maintenance and tracking

X. Military Explosives and Propellants

A. Identification

B. Effects
C. Application and use

XI. Destruction of Explosive Material and Related Hazardous Materials

A. Transportation
B. Firing systems
   (1) Electric
   (2) Non-Electric
C. Disposal procedures
   (1) Routine
   (2) Emergency
D. Munitions residue
   (1) Inspect
   (2) Certify
   (3) Disposition
E. Environmental protection
   (1) Considerations
   (2) Use of U.S. Environmental Protection Agency (EPA) 8700-22 manifest
   (3) EPA permits and applications
   (4) Identify environmental impacts caused by EOD
   (5) Identify EPA regulations and directives pertaining to EOD operations
   (6) Determine EPA documentation requirements
   (7) Identify responsibilities of interfacing agencies

XII. Render Safe Techniques

A. Immobilize fuses
B. Remove fuses
C. Disable electrical components
D. Disrupt firing trains
E. Use shaped charges and demolition techniques

XIII. Chemical and Biological Warfare Agents

A. Classification
   (1) Types
   (2) Physical state
   (3) Physiological action
   (4) Persistency
B. Use protective clothing and equipment
C. Seal and package leaking munitions
D. Use detection and identification kits
E. Apply first aid/self air procedures

F. Use decontaminants and decontamination equipment

XIV. Placed Munitions

A. Land mine and fuses

(1) Location

(2) Identification

(3) Observe safety precautions

(4) Render safe

(5) Perform disposal procedures

B. Booby traps and fuses

(1) Classification

(2) Identification

XV. Projected Munitions, Rockets, and Grenades

A. Projected munitions and their fuses

(1) Observe safety precautions

(2) Identification

(3) Locate

(4) Render safe

(5) Disposal

B. Projected munitions, rockets, and grenades of foreign countries

(1) Observe safety precautions

(2) Identification

(3) Locate

(4) Render safe

(5) Disposal

XVI. Dropped Munitions

A. Bombs and bomb fuses

(1) Observe safety precautions

(2) Identification

(3) Render safe

(4) Disposal

B. Dispensers and payload

(1) Observe safety precautions

(2) Identification

(3) Render safe

(4) Disposal

XVII. Aircraft Weapons Systems and Explosives

A. Aircraft egress/weapons systems

(1) Aircraft/egress

(2) Gun systems

(3) Release and launching systems

(4) Missile/rocket launching systems

(5) Miscellaneous explosive-actuated devices

B. Aircraft explosive devices

(1) Locate

(2) Identify

(3) Observe safety precautions

(4) Render safe

XVIII. Pyrotechnics

A. Identify

B. Observe safety precautions

C. Render safe

D. Disposal

XIX. Guided Missiles

A. Classification

B. Identification

C. Propulsion Systems

(1) Identification

(2) Characteristics

D. Hazardous missile components and propellants

(1) Identification

(2) Render safe

(3) Removal

(4) Disposal

E. Guided missiles of foreign countries

XX. Explosive Ordnance Reconnaissance

A. Recognition of terrain changes due to unexploded ordnance (UXO)

B. Locate, mark, and report UXOs

C. Estimate collateral damage

D. Technical intelligence

(1) Use photographic equipment

(2) Reporting

XXI. Access and Recovery

A. Characteristics of soils

B. Effects of weather on soils

C. Methods of gaining access

D. Performing field rigging and improvised hoisting

E. Tie knots, bends, and hitches

XXII. Ranges

A. Decontaminate ranges

(1) Active

(2) Inactive

(3) Excess

B. Proficiency training and demolition ranges

(1) Establish

(2) Maintain

XXIII. Improvised Devices

A. Locate

B. Gain access

C. Identify

D. Interpret radiographs

E. Observe safety precautions

F. Render safe

G. Perform disposal procedures

XXIV. Base Recovery after Attack

A. Concept

B. Responsibilities

C. Pre-attack EOD procedures

D. Post-Attack EOD procedures

E. Munitions clearance vehicle Concept of Operations (CONOPS)

XXV. Peace Time Operations

A. Develop plans for range clearance operations

B. Develop plans for ammunition disposal report operations

C. Use of demolition techniques

XXVI. Communications/Electronics

A. Tactical radios

B. Global positioning system

C. Frequency management requirements

XXVII. Render Safe Techniques

A. Immobilize fuses

B. Remove fuses

C. Disable electrical components

D. Disrupt firing trains

E. Use shaped charges and other explosive techniques

XXVIII. Case Attack Procedures

A. Use Stand-Off Munitions Disruption (SMUD) techniques

B. Use thermal techniques

C. Use shaped charges and other explosive techniques

XXIX. US and Foreign Underwater ordnance

A. Identify

B. Observe safety precautions

XXX. New EOD Developments

XXXI. General Contingency Responsibilities

A. Prime Base Engineer Emergency Force (BEEF) orientation

B. Field sanitation and hygiene

C. Self-protection from extreme weather

D. First aid techniques

E. Personnel/work party security

F. Convoy security

G. Air base ground defense interface

H. Passive defense

I. Terrorism

J. Base denial

Table D-2 Hazardous Waste Training Outline

1. This training is provided primarily to initial/satellite accumulation point managers. This course is designed to fulfill, in part, the requirements of 40 CFR §265.16.
2. The following material is covered during the class:
   A. Introduction to RCRA
   B. Definition of Hazardous Waste – Characteristic and Listed wastes
   C. Accumulation point managers
   D. Container use, marking, labeling, and on-base transportation
   E. Contingency planning and emergency response.

DRAFT
ATTACHMENT E

CONTINGENCY PLAN

HOLLOMAN AIR FORCE BASE
OPEN DETONATION TREATMENT UNIT

Permit No. NM6572124422

ATTACHMENT E
CONTINGENCY PLAN
20,000-POUND OPEN DETONATION UNIT

E.1 INTRODUCTION

This 20,000-Pound Open Detonation Unit Contingency Plan (Contingency Plan) outlines procedures for responding to an emergency involving hazardous waste at the OD Unit. This Contingency Plan was prepared in accordance with the requirements of 20 New Mexico Administrative Code (NMAC) Title 20, Chapter 4, Part 1, Subpart V (20.4.1.500 NMAC) §264.50 to §264.56.

E.1.1 PURPOSE AND IMPLEMENTATION

The purpose of this OD Unit Contingency Plan is to define responsibilities, ensure coordination of response activities, and minimize hazards to human health or the environment from fire, explosions or any unplanned sudden or non-sudden release of hazardous wastes to the environment.

This Contingency Plan is designed to minimize hazards to human health and the environment from emergencies that may occur as a result of managing hazardous wastes (ordnance materials) at the Holloman AFB 20,000-Pound OD Unit. The ordnance materials are solids that demonstrate the hazardous characteristics of reactivity. Emergency events that could occur would be an uncontrolled explosion, an accidental fire, or a diesel fuel spill.

This Contingency Plan will be reviewed and, if necessary, amended whenever any of the following occurs:

- The facility permit is revised;
- The plan fails in an emergency;
- Design or operation of the facility changes significantly such that implementation of the Contingency Plan would be affected;
- List of emergency coordinators changes; or
- List of emergency equipment changes.

E.1.2 OD UNIT OPERATIONS

Activities at the OD Unit consist of detonation of ordnance materials that are considered to be hazardous wastes due to their exhibiting the characteristics of reactivity (U.S. Environmental Protection Agency [EPA] Hazardous Waste Code D003). As evidenced by the chemical composition information contained in the Waste Characteristics section, Attachment B, the ordnance materials contain relatively few hazardous constituents that would persist after detonation, and the constituents are relatively immobile. Consequently, the only immediate threat

to human health or the environment as a result of activities at the OD Unit is an uncontrolled explosion, an accidental fire, or a diesel fuel spill.

The primary mission of the OD Unit is to render safe reactive materials at HAFB that have exceeded their shelf life, deteriorated unexpectedly, are damaged, or failed to attain specifications. In the event that an uncontrolled explosion occurred at the OD Unit, the exploded materials would not present a danger to human health or the environment outside the immediate area of the OD Unit. In that event, additional explosive ordnance disposal (EOD) personnel would be dispatched to the OD Unit to render safe any unexploded ordnance material that may be present following an uncontrolled explosion. In case a treatment event at the OD Unit is aborted, the waste will be removed and sent back to the generator.

There is a fire response station located at HAFB. Fires that occur at HAFB are handled by CEF Fire Protection Flight at HAFB. Additionally, HAFB maintains a Disaster Control Group that can also respond to fire emergencies. For fire emergencies that are extremely large, HAFB has agreements with Alamo West and the cities of Alamogordo and Cloudcroft to use their volunteer fire departments.

In the event of a diesel fuel spill, fire protection personnel will respond. EOD personnel maintain additional spill response supplies and equipment, and are trained in diesel fuel spill response.

The overall approach for emergency response at HAFB is through a hierarchy of personnel for responding to emergencies throughout the Base as detailed in the Holloman Emergency Management Plan 10-2. The procedures outlined in this Contingency Plan are developed to specifically detail the procedures for an emergency involving hazardous waste at the OD Unit.

E.1.3 COORDINATION AGREEMENTS

HAFB maintains a full spectrum of emergency response services at the installation including a fully equipped fire response station, emergency medical services, and military police. As there is now only an on-post clinic, the base has arrangements with the Gerald Champion Regional Medical Center. These installation organizations have been contacted to familiarize responders with operations and contingency planning for the OD Unit.

Although the capabilities of HAFB exceed those of local emergency response services, HAFB has agreements with various outside facilities pursuant to 20.4.1.500 NMAC §264.37. These agreements are maintained at the HAFB facility in accordance with 20.4.1.500 NMAC §264.50 through 52(c). These facilities include the local volunteer fire departments in Alamo West and the cities of Alamogordo and Cloudcroft.

E.1.4 EMERGENCY COORDINATORS

The primary Emergency Coordinator (as required by 20.4.1.500 NMAC §264.55) at HAFB is the Commander of the 49th Mission Support Group. The Commander has a detailed knowledge of hazardous waste operations at HAFB, layout and operations at the OD Unit, and the emergency response procedures of the Contingency Plan. The Emergency Coordinator is authorized to commit all resources necessary for emergency response activities.

The secondary Emergency Coordinator at HAFB is the Base Civil Engineer. EOD personnel are the primary support for an emergency situated at the OD Unit. HAFB fire protection and disaster control groups assist in emergency situations at the OD Unit. The Emergency Coordinator is reached by calling the Command Post at 572-7575.

E.1.5 IMPLEMENTATION OF THE CONTINGENCY PLAN

The Contingency Plan will be implemented immediately whenever there is an accidental fire, spill, or uncontrolled explosion that could threaten human health or the environment. Such a fire would be defined as one that had spread outside the boundaries of the OD Unit to an extent that HAFB personnel and equipment could not provide adequate containment.

E.1.5.1 Emergency Response Procedures (20.4.1.500 NMAC §264.56)

During an event not requiring implementation of the OD Unit Contingency Plan, EOD personnel will alert Test Track personnel and the fire protection group via portable radio.

During an emergency situation that requires implementation of the OD Unit Contingency Plan, the emergency coordinator would implement the following first level response procedures:

- Activate internal communications systems to alert emergency response personnel;
- Identify the character, exact source, amount, and areal extent of the released materials;
- Assess possible hazards to human health and the environment (both on-installation and off-installation);
- Take steps to mitigate the spread or reoccurrence of the fire;
- Notify appropriate state or local agencies, if needed;
- Assess possible hazards to human health or the environment as a result of the fire; and
- Remove/transport any untreated ordnance material if the fire occurs while ordnance material is still present at the site.

If, based on the assessment of possible hazards, the emergency coordinator determines that the fire could threaten human health or the environment on the installation, he would immediately notify the military police. If evacuation is considered necessary, the emergency coordinator would confer with military police on which areas should be evacuated. If, in the unlikely event that the emergency coordinator determines that the fire could threaten human health or the environment off-installation, he would immediately notify local authorities. If evacuation is considered necessary, the emergency coordinator would confer with local authorities and with military police on which areas should be evacuated. The environmental flight will notify the National Response Center at 1-800-424-8802 and provide the Center with the following information:

- Name and telephone number of the reporter (emergency coordinator making the notification);
- Name and address of the facility (Holloman Air Force Base, Alamogordo, New Mexico);
- Time and type of incident (fire);
- Name and quantity of materials involved;
- The extent of injuries, if any; and
- The possible hazards to human health or the environment outside the facility.

If evacuation is required, the evacuation plan consists of military police providing direct notification to persons in the likely path of the fire to evacuate. However, no residential areas exist near the OD Unit, and the possibility of fire spreading to residential areas is extremely unlikely.

E.1.6 EMERGENCY RESPONSE EQUIPMENT (20.4.1.500 NMAC §264.32)

HAFB maintains a large inventory of equipment that can be used as emergency response equipment. Although this equipment is not dedicated solely for hazardous waste service, it can be used in response to a fire involving hazardous waste. A listing of the available equipment, number of items, and the locations of the equipment are included Section E.2.4.9. After use, all durable emergency response equipment must be cleaned, inspected, and fit for its intended use prior to resuming operations at the OD Unit. All non-durable emergency response equipment that is disposed of must be replaced as soon as practicable.

E.1.7 POST EMERGENCY REPORTS [20.4.1.500 NMAC §264.56(j)]

HAFB will note in their operating record the time, date, and details of any incident that requires implementation of the Contingency Plan. Within 15 days after an event requiring implementation of the Contingency Plan, an incident report will be prepared detailing the event and submitted to the Region VI Regional Administrator of the EPA and the NMED as required by 20.4.1.500 NMAC §264.56(j). The report will include the following information:

- Name, address, and telephone number of HAFB;
- Date, time, and type of incident (e.g., fire, explosion);
- Name and quantity of material(s) involved;
- The extent of injuries, if any;
- An assessment of actual or potential hazards to human health or the environment, where applicable; and
- Estimated quantity and disposition of recovered material that resulted from the incident.

Before operations are resumed at the OD Unit, NMED will be notified that the OD Unit is in compliance with 20.4.1.500 NMAC §264.56(h) and (j). The notification will verify that wastes

incompatible with the released material is treated until cleanup procedures are completed and that all emergency equipment is cleaned and ready for its intended use.

E.2 CONTINGENCY RESPONSE PLAN

The information contained in the following paragraphs is adopted from the Holloman AFB Emergency Management Plan 10-2. The plan is divided into six sections that identify:

- Overall mission;
- Designated parties and their responsibilities;
- Emergency response, control, and countermeasures;
- Contingency plan requirements and actions;
- Contingency training; and
- Plan review and update.

E.2.1 GENERAL INFORMATION

This contingency plan will be reviewed continually and revised if any of the following occur: the facility permit is revised; the plan is inadequate in an emergency; the procedures herein can be improved; facility operations change in a way that alters the plan; the emergency coordinator changes; or the emergency equipment list changes. Amendments to this plan can be initiated by any responsible party. Proposed changes may be submitted to the 49th Civil Engineer Squadron (49 CES) as the office with primary responsibilities to represent both EOD personnel and other contingency response personnel. Adopted changes will be provided to all record holders of this permit.

Copies of the Contingency Plan will be available at the 49th Civil Engineer Squadron and the base EOD office.

The facility name, address, owner/operator ID number and permit number are provided below:

Name:	Holloman Air Force Base
Address:	550 Tabosa Avenue, HAFB, New Mexico 88330-8458
Owner:	United States Air Force
Operator:	Holloman AFB
EPA ID No:	NM6572124422
Permit No:	NM6572124422-OD

E.2.2 EMERGENCY COORDINATORS

The emergency coordinators will coordinate and direct control and cleanup efforts at the scene in case of an incident involving the transportation, handling, or demolition of explosive waste items. The emergency coordinators can designate other personnel to assist them in the event of an emergency and have the full authority to obtain fire and medical support service should the need arise.

Prior to operations by EOD personnel, the EOD supervisor contacts the following base offices: meteorology, munitions, medical services, security police, base operations, 49 CES/CEV, and the fire chief. Therefore, these organizations are alerted in the event that potential emergencies occur during EOD treatment operations.

The primary on-scene coordinator (OSC) for HAFB is the Commander, 49th Mission Support Group. The title and work phone number of the primary OSC and designated alternates are provided below:

Title	Base Phone No.
Commander (MSG)	(505) 572-5541
Base Civil Engineer (CE)	(505) 572-3071
Fire Chief/	(505) 572-7228
Assistant Fire Chief on Duty	(505) 572-7288

E.2.3 IMPLEMENTATION

The decision to implement the Contingency Plan for the OD Unit depends upon whether an imminent or actual incident could threaten human health or the environment.

The purpose of this section is to provide guidance to the emergency director in making this decision by providing decision-making criteria.

The Contingency Plan will be implemented in the following situations:

- An unplanned fire or unplanned explosion occurs at the OD Unit such that:
  - the potential for human injury exists;
  - toxic fumes that could endanger human health or the environment are released;
  - the fire could spread on-site or off-site and possibly ignite other flammable materials or cause heat-induced explosions;
  - the use of water and/or chemical fire suppressants could result in contaminated run-off that could endanger human health or the environment; or,
  - an imminent danger exists that an explosion could ignite other hazardous wastes at the facility and possibly result in the release of toxic material.
- A spill or unplanned release of hazardous material occurs at the unit such that:
  - The spill could cause the release of toxic liquids or fumes that could endanger human health or the environment;

  - The spill cannot be contained in the immediate area resulting in potential off-site soil contamination and/or ground or surface water pollution that could endanger human health or the environment;
  - The spilled material inadvertently detonates or is combustible; or,
  - A fire or explosion occurs during transportation of the waste or residuals to or from the unit.
- A planned treatment event results in:
  - Damage to the unit beyond that normal to such treatment event and such that release is imminent;
  - Any structure, road surface, or other item is ignited in the vicinity; or
  - During rupture of a cylinder, the cylinder is released from its securing device.

E.2.4 EMERGENCY RESPONSE PROCEDURES

E.2.4.1 Notification

The EOD team members discovering a potential emergency incident at any of these units will notify Fire Protection and the Range Control Supervisor. The Range Control Supervisor will, in turn, notify the OSC or alternate. The OSC or alternate will immediately activate the internal alarm system to notify or evacuate personnel, if appropriate. In addition, the OSC or alternate will notify the Base Fire Chief, Environmental Coordinator, Base Civil Engineer, Chief of Operations, Readiness Flight, Environmental Flight, Public Affairs, and Medical Services as required.

The appropriate local agencies with designated response roles will be notified by the OSC if their help is needed. The appropriate state agencies will be notified if their assistance is needed, or the incident requires reporting at this level.

The evacuation routes to be used in the event of an emergency are the OD Unit entrances, provided that the extent of the incident is limited to the immediate vicinity but temporary evacuation is required. Evacuation from the main base area, if required, is designated in the Holloman AFB Emergency Management Plan 10-2.

E.2.4.2 Identification of Hazardous Wastes

The OSC will immediately identify the character, exact source, amount, and extent of the material involved in the unplanned incident. The initial identification method will be by visual inspection of the incident's effects, spilled material, and location of the release. Plan records, including inventories and process and waste log sheets, are available at the EOD Administrative Office to aid in estimating the composition and quantity of released material.

Qualified personnel will sample the released material to verify hazardous material identification, to determine boundaries of contaminated areas and contaminant concentrations, and to verify that proper cleanup activities are completed.

E.2.4.3 Hazard Assessment

Possible hazards to the environment and public health will be assessed by the OSC, and the need for local evacuation and notification of local authorities will be determined. In assessing the situation, the OSC will consult with the Environmental Flight, Bioenvironmental Engineer, and Base Fire Chief. These parties will consider direct and indirect effects of the event on human health, welfare, and natural resources. In assessing the event, the potential for direct and indirect effects will indicate, but not be limited to, fire, explosion, further release occurrence, toxic gases, or injection by run-on and run-off. Action will be taken to control releases and minimize effects during such an emergency if the situation involves the release or potential release of toxic effluent.

The OSC, in conjunction with the noted personnel, will determine whether the OD Unit has had a release that could threaten human health or the environment outside the base. Bioenvironmental Engineering personnel will survey the area and advise the OSC in the establishment of protective boundaries around the contaminated areas.

If a release results in a vapor cloud, several methods are available for assessing the hazards. Portable equipment for direct air monitoring can be used to make a rapid determination of the most volatile organics.

Meteorological data, including wind speed, wind direction, temperature, dew point, barometric pressure, and an automatically calculated stability factor are continuously available from Base meteorological towers. These data, along with information about the source of an atmospheric release, can be used to predict the direction, extent, and estimated concentration profile of a contaminated release.

If the assessment of the incident indicates that evacuation of areas downwind of the unit may be advisable, the OSC will immediately notify Headquarters Air Combat Command Environmental and the appropriate local authorities. He will consult with these officials to help decide whether local areas should be evacuated. The OSC or the Environmental Flight will immediately notify the National Response Center (using their 24-hour toll free number, 1-800-424-8802).

E.2.4.4 Control Procedures

Potential accidents at the OD Treatment Unit can be considered as either an unplanned fire/explosion, inadvertent facility damage, or spill material release. Natural disasters such as earthquakes, hurricanes, or tornadoes are not assumed to cause actions that fall into one of these categories. Procedures for responding to these incidents are contained in this Contingency Plan, Holloman AFB Emergency Management Plan 10-2, and Technical Orders 11A-1-60. Specific actions to be taken at these units include:

Ordnance Transportation Vehicles

- Explosion. In the event of an explosion, personnel will immediately withdraw to a safe distance and evaluate the situation. NOTE: This does not apply to detonation during transport, which requires immediate implementation of the Emergency Management Plan 10-2. Heavy-bodied trucks have been specifically chosen for this task due to the inherent risk associated with these materials. Transport limits and requirements are specified in relevant EOD technical orders.

- Fire. In the event of a fire involving a transport vehicle with ordnance onboard, an attempt to control the fire with available extinguishers may be permissible if the fire is initially away from the ordnance. If not, personnel will withdraw to a safe distance and advise appropriate authorities.

E.2.4.5 Prevention of Recurrence or Spread of Fires, Explosions, or Releases

To prevent the recurrence or spread of fires, explosions, or releases, at a minimum, the follow-up actions are as follows:

- Start actions to collect, treat, and dispose of nonexplosive waste or other materials as appropriate. This will be a joint operation involving EOD, Fire Protection, and Bioenvironmental Engineering personnel.

- Ensure that EOD, Fire Protection, and Safety personnel investigate the cause of the emergency and provide a technical report to the Commander, 49th Mission Support Group within 72 hours.

- Ensure that proper restoration actions are started as soon as possible after appropriate decontamination procedures for explosives have been completed. This will be a joint operation between Safety and Civil Engineering personnel for Air Force incidents. All decontamination actions will be documented, and the records will be permanently maintained at Air Force EOD, Safety, and Real Property offices.

- Ensure that equipment repaired or replaced as a result of the incident is recertified, as necessary, prior to being returned to service.

E.2.4.6 Storage and Treatment of Released Material

The storage and treatment of any released material will be managed in accordance with the Holloman AFB Emergency Management Plan 10-2.

E.2.4.7 Post-Emergency Equipment Maintenance

Post-emergency equipment maintenance will be performed in accordance with the Holloman AFB Emergency Management Plan 10-2.

E.2.4.8 Container Spills and Leakage

Any container spills or leakage that might occur at these units will be managed in accordance with the Holloman AFB Emergency Management Plan 10-2.

E.2.4.9 Emergency Equipment

The following items will be available for EOD activities:

- First aid kit (NSN-654500-116-1410) or suitable substitute;
- Ambulance or first aid vehicle;
- Fire extinguisher in vehicles carrying class B/C explosives;
- Hand-held radio for contact with range control;
- Vehicular radio for emergency communication;
- Team chief's response kit with maps;
- Road kit one per vehicle;
- General purpose tool kit;
- Signal kit;
- Pioneer tool kit (if required for specific treatment event);
- Road flares;
- Shovels; and
- Bulldozer.

E.2.4.10 Coordination Requirements

In addition to the Base organizations and personnel assigned to the response effort, provisions have been made for including off-base organizations in the response organization when on-base response resources and expertise are insufficient, and when off-base water, land, or air are adversely affected. Some of the significant off-base response resources that can be incorporated, as needed, include the following.

a. ACC/A7V:

   Major Command office responsible to ensure environmental protection including spill response matters. This office is located at Langley AFB, Virginia and can be reached at DSN 574-9342 or commercial 757-764-9342.

b. Air Force Center for Environmental Excellence (AFCEE):

   AFCEE is assigned the responsibility to provide technical guidance and assistance to major commands and bases in contingency operations and environmental planning. Technical expertise can be provided to the Air Force OSC on hazardous material identification, control, cleanup, and disposal. AFCEE is located at Brooks City-Base in San Antonio, Texas. The contact information for AFCEE is as follows:

   AFCEE Spill Response Management
   DSN Phone: 240-3517 or commercial (210) 536-3517.

   AFCEE Hazardous Materials Management
   DSN Phone: 240-4220 or commercial (210) 536-4220

c. State of New Mexico Response Team:

NMED has developed an Emergency Response Team to respond to spills occurring within the state boundaries. The state OSC will be briefed fully by the base OSC on the spill response. The state OSC will be familiar with the available sources of spill response equipment and materials within New Mexico. The NMED emergency response team phone number is (505) 827-9329.

d. City of Alamogordo Fire Department:

HAFB has a mutual aid agreement with the city of Alamogordo Fire Department (located about 7 miles east of HAFB to provide assistance in the event it should be needed. The phone number of the Alamogordo Fire Department is (505) 439-4300.

e. White Sands Missile Range:

HAFB has a mutual aid agreement with the White Sands Missile Range Fire Department located approximately 40 miles west.

f. National:

The following information services are also available to assist in the event of an emergency:

- CHEMTREC® (Chemical Transportation Emergency Center)
- Chemical Hazard Response Information System Manual
- ERIS (Emergency Response Information System)
- OHMTAPS (Oil and Hazardous Materials/Technical Assistance Data System)
- U.S. Air Force Occupational and Environmental Health Laboratory.

E.2.4.11 Evacuation Plan

It is extremely unlikely that emergency operations at the OD Unit would require evacuation of other areas at HAFB since these units are isolated from any other area or office buildings.

The general base excavation plan is provided as part of the Disaster Preparedness Plan.

E.2.4.12 Required Reports

The emergency coordinator will notify the Environmental Flight, who will report pollution incidents as necessary, as follows:

1. All pollution incidents will be reported as soon as practicable, by telephone during duty hours or by message during off-duty hours, to the following agencies:

   a. HQ ACC/A7V

   Defense Switched Network (DSN) 574-9342; commercial (757) 764-9342

b. Regional Response Center (RRC)

Environmental Protection Agency
Region VI First Interstate Bank Tower
1445 Ross Avenue, Dallas, TX 75202-2733
(214) 767-2666/2720, or Telex 910-861-4125

c. New Mexico Environment Department (505)-827-9329

2. Major spills or potentially major spills will immediately be reported by telephone and email or facsimile to the RRC (l.b above) and:

National Response Center
Environmental Protection Agency
Nasiff Building
400 7th Street, SW, Washington, DC 20590
1-800-424-8802 or Telex 426-0014

Medium-sized spills will be reported to the above agencies as soon as practical.

DRAFT
ATTACHMENT F

20,000-POUND OPEN DETONATION UNIT MANAGEMENT

HOLLOMAN AIR FORCE BASE
OPEN DETONATION TREATMENT UNIT

Permit No. NM6572124422

ATTACHMENT F
20,000-POUND OPEN DETONATION UNIT MANAGEMENT

INTRODUCTION

This attachment addresses the requirements of Title 20, Chapter 4, Part 1, Subpart V New Mexico Administrative Code (NMAC), (20.4.1.500 NMAC), incorporating Title 40 Code of Federal Regulations (CFR) §264, Subpart X and 20.4.1.900 NMAC incorporating 40 CFR §§270.23 and 270.73.

F.1 OPERATIONAL PROCEDURES AND WASTE MANAGEMENT PRACTICES

F.1.1 LOADING/UNLOADING OPERATIONS

Procedures to prevent accidental detonation of the waste are also applicable to spill prevention during pretreatment operations. EOD procedures to prevent accidental detonation are detailed in the U.S. Air Force Publications: Technical orders (TOs) 11A-1-42 and 11A-1-60. In general, these procedures specify use of nonsparking tools, encasement to reduce impact, use of certain clothing materials, and, most importantly, removal of primers and initial detonators from the device. The explosive nature of the waste indicates the greater hazard to be incidental detonation during transfer of waste into the detonation zone. None of the energetic waste contains free liquid.

All vehicles will be inspected before loading. Deficiencies will be corrected at the time of inspection, if such correction is considered necessary for safe delivery to the unloading point. During loading or unloading of vehicles, the brakes must be set and if the vehicle is on a grade, at least one wheel must be chocked.

No explosives or ammunition will be loaded into or unloaded from vehicles while the motor is running unless the motor is required to provide power to vehicle accessories, such as mechanical handling equipment utilized in the loading and unloading of the vehicles.

Handling and Preserving Explosives

a. Improper, rough, and careless handling of explosives may result in undue accidents that could result in loss of life, injury, or property damage. The history of accidents that have occurred in the use, handling, shipping, and storing of ammunition shows that in many instances where the cause was determined, the accidents have been due to human error and circumstances that were avoidable.

b. If hazardous conditions present immediate danger to life and property, operations will not be continued until the hazard has been removed.

c. Explosives and ammunition will be handled and transported carefully. Containers will not be tumbled, dragged, thrown, dropped on each other, rolled, walked over, or dropped from tailboards of trucks.

d. Explosive containers should not be opened unnecessarily and should remain sealed until needed.

Procedures to ensure safe handling of these reactive wastes are detailed in TOs 11A-1-42 and 11A-1-60. All operations are performed by fully trained EOD personnel under the direction of the EOD Supervisor. These personnel are familiar with procedures to be followed for the material being handled.

F.1.2 TRANSPORTATION OF EXPLOSIVE WASTES TO THE OD UNIT

The waste energetic items are transported in accordance with TO 11A-1-60 and other relevant orders. Prior to transport, the EOD supervisor briefs all members of the team on hazards associated with specific items, pertinent technical data, technical orders, specified treatment procedures, safety precautions, and transport procedures.

These waste munitions are transported to the OD Unit in their original containers or casings, which are designed for long-term stability and thus ensure that no wastes are inadvertently released to the environment prior to treatment. In addition, no free liquids are included among the wastes treated at the OD Unit. Free liquids in waste have a much higher potential of infiltrating into the soil and migrating vertically.

F.1.3 TREATMENT PROCESS

The 20,000-Pound OD Unit provides thermal treatment to waste propellant devices identified as hazardous waste due to reactivity. Certain constituents that may be present in these wastes could potentially pose a risk to those exposed to them. In order to render the wastes nonreactive and eliminate this risk, they are thermally treated. Once the wastes have been successfully treated, they are no longer considered hazardous. Thermal treatment is accomplished by placing the waste within the aboveground cleared OD Unit and detonating it.

All OD Unit waste treatment activities are conducted on the ground surface. No trenches or pits are excavated to contain the wastes. Detonation charges that consist of Cyclotrimethylenetrinitramine (RDX) explosives are added to the waste pile in order to detonate the wastes. The OD operations are conducted within a single graded area at the OD Unit (approximately 400 feet in diameter), as described in Permit Attachment A. Potential contaminants that may be released during thermal treatment are generally limited to trace amounts of explosive compounds or metals. The thermal treatment process generally ensures complete destruction of the wastes. After a detonation, any unexploded fragments of the original ordnance are collected and re-exploded to further ensure that complete destruction of the original waste ordnance has occurred. Larger metallic fragments are picked up after each detonation for proper disposal. Because the wastes are treated on the ground surface, a thorough collection of the waste fragments and unexploded ordnance is possible.

F.1.4 OPERATING PRACTICES

Operational procedures at the 20,000-Pound OD Unit are governed by Department of the Air Force Publication TO 11A-1-42. This order specifies certain atmospheric conditions for OD treatment operations. In summary, these conditions are:

- **Temperature:** general (>55°F); winter (not specified) ;
- **Wind speed:** general (4 to 15 miles per hour); winter (7 to 15 miles per hour);
- **Precipitation:** no treatments allowed; cloud cover: none or limited; and
- **Time:** 7:00 am to 5:00 pm (daily).

The climatic conditions at HAFB generally allow detonations to be conducted under conditions specified as "excellent" in TO 11A-1-42.

Personnel who perform operations at the 20,000-Pound OD Unit are specifically EOD-trained staff members. The total number of EOD personnel is limited to those required to perform the operation.

A minimum of two personnel, one of which is an EOD supervisor, are required for all operations. These personnel are provided both initial training at the Eglin Air Force Base school for ordnance and annual reviews concerning ordnance items and Resource Conservation and Recovery Act (RCRA) requirements. Permit Attachment D outlines the required training.

During all operations, the EOD supervisor operates as the range manager and controls initiation of the thermal treatment. Prior to initiation of the treatment event, all other EOD personnel are required to move and take cover south of the 20,000-Pound OD Unit outside the danger area.

Several efforts are performed prior to the thermal treatment event. All waste energetic items destined for treatment are inspected, logged, and accounted for prior to removal from stock or other designation as waste. It should be noted that these items become waste primarily through shelf-life exceedance or inequalities noted during inspections of serviceable items. A complete inventory of items to be treated is compiled on the advance disposal request, which requires headquarters approval before treatment can proceed. Additionally, an inventory of items to be treated is recorded on the EOD Report (AF Form 3579). Prior to the scheduled treatment event, the EOD supervisor notifies the following base agencies:

- Meteorological service (for imminent weather conditions);
- Munitions control;
- Base medical service;
- Security police;
- Base operations;
- On-site coordinator; and
- Base environmental coordinator.

Upon arrival at the unit, all waste energetic items are inspected and accounted for by comparison with the previously prepared inventory. During transport and operations, all nearby roads are cleared, posted, and maintained free of traffic.

To limit the potential for incidental detonations, all primer and detonating items are removed from the waste energetic items. No attempt is made to remove these items if they are integral parts of the device.

F.1.4.1 Explosive Open Detonation Treatment

The actual treatment is accomplished by placement of the waste items on the ground within the OD Unit and attachment of C-4 (RDX) donor charges to the waste item. An "explosive train" is constructed, and remote control detonation is initiated from the designated clear zone. The donor device consists of a series of components that are referred to as an explosive train once the individual devices are placed in combination. An explosive train consists of a primer, an initial detonating agent, and a high explosive. Explosive train detonation is achieved by step-wise detonation of the components.

F.1.4.2 Standard Operating Practices

EOD has SOPs that define uniform standard procedures, instructions, and safety precautions to be employed during EOD operations conducted at the HAFB 20,000-pound OD Unit. These SOPs ensure that HAFB will implement the OD activities in a manner protective of human health and the environment. The SOPs require specific actions at time intervals listed below prior to and after treatment at the OD Unit:

- Two Weeks in Advance of Scheduled Detonation,
- One Week in Advance of Scheduled Detonation,
- Day Before Scheduled Detonation,
- Day of Detonation, and
- Within 72 Hours After Detonation Occurs.

A checklist that lists specific activities to be performed at the intervals listed above is included as Exhibit F-1.

F.1.5 WASTE STAGING

Wastes to be treated are transported to the OD Unit by trained EOD personnel. Waste is not stored at the OD Unit and is transported prior to a scheduled treatment event. If the treatment event is aborted due to any reason, the waste is removed and transported back to the generator.

F.1.6 IGNITABLE, REACTIVE AND INCOMPATIBLE WASTES

In accordance with the requirements of 20.4.1.500 NMAC §264.17(a), EOD personnel take precautions to prevent accidental ignition or reaction of ignitable or reactive waste. The waste is kept separated and protected from sources of ignition or reaction such as open flames, cutting and welding, and hot surfaces. "No Smoking" signs are placed in waste storage and waste handling areas.

Each waste item that is destined for treatment at the OD unit will be handled in accordance with TOs 11A-1-42 and 11A-1-60. Waste energetic items will not be opened at any time due to the potential for accidental detonation. Post-detonation residues will be inspected to ensure that no untreated waste remains in the OD treatment unit. These measures meet the requirements of 20.4.1.500 NMAC §264.17(b).

The Waste Analysis Plan included as Attachment B provides information on waste characterization (process knowledge, Material Safety Data Sheets, and other technical information) required to document compliance with 20.4.1.500 NMAC §264.17(c).

Incompatible wastes are not handled at the OD Unit. Therefore the requirements of 20.4.1.500 NMAC §264.177 are not applicable. Waste munitions are brought to the OD Unit in their original containers or casings. Containers used for storage of treatment residue (metal fragments) are compatible with the wastes stored.

F.1.7 SECURITY AND ACCESS

The security procedures outlined in this section have been provided by HAFB in compliance with New Mexico Hazardous Waste Management Regulations 20.4.1.500 NMAC §264.14 and 20.4.1.900 NMAC §§270.14(b)(4) and 270.14(b)(19)(viii).

The following sections address security procedures, inspection requirements, preparedness requirements, procedures taken to prevent accidental detonation, prevention of the mixing of incompatible waste, and means to reduce personnel exposure.

F.1.7.1 Security [20.4.1.500 NMAC §264.14(b)(1)]

The primary mission of HAFB is to provide upgrade and continuation training for aircrews assigned to the installation. Additionally, solid base propulsion systems for military devices are tested at the area identified as the Test Track. The general nature of these activities is such that portions of the base facility are under constant surveillance.

In particular, such areas include the Test Track Facility, flight line areas, and the munitions building. In addition to these surveillance measures, the main base area and any base area adjacent to these secure zones are patrolled at intervals day and night.

Traffic access to HAFB is possible from three routes. These include Highway 70 at the southern boundary of the base; the La Luz gate between Alamogordo and Tularosa; and, through White Sands Missile Range. The main gate is manned by armed guards 24 hours per day, and the other gates are manned and open Monday through Friday from 0600 until 1800 hours. White Sands Missile Range is also under continuous surveillance. These general surveillance practices provide 24-hour surveillance of the OD Unit. Additionally, during explosive open detonation events, constant surveillance of the OD treatment unit is provided by Test Track personnel and the Security Police.

F.1.7.2 Barrier and Means to Control Entry [20.4.1.500 NMAC §264.14(b)(2)(i) and (ii)]

The 20,000-Pound OD Unit is located at the end of a single access road that runs approximately 10 miles along the length of the test track. Entrance to the test track area is strictly controlled by Test Track personnel and the Security Police. Entrance to these units is restricted to authorized visitors on approval of the EOD supervisor. Visitors to the unit must be accompanied by EOD personnel. No visitors are allowed during detonation events. Additionally, the OD Unit is provided with only a single entrance. During detonation events, the area is routinely patrolled to prevent access to the OD Unit.

The OD Treatment Unit is a restricted-access area, with the entire area boundary fenced and posted with warning signs at 400 feet intervals.

F.1.7.3 Warning Signs [20.4.1.500 NMAC §264.14(c)]

HAFB has posted warning signs within 100 feet (30.5 meters) of the perimeter of the OD Unit. These signs are printed in English, Spanish, German, and Apache to read as follows (for example, English and Spanish):

"DANGER, NO UNAUTHORIZED PERSONNEL, KEEP OUT"
"PELIGRO, NO PERMITIDA LA ENTRADA SIN AUTORIZACION"

These signs are posted at the road entry point and where the perimeter fence approaches roads or active areas. The gate is marked with a sign which reads, "Danger, Explosives" and is situated to prevent unauthorized access to the active portion of the OD Unit. Monthly security inspections are conducted and recorded by the HAFB Security Police.

F.1.8 PREPAREDNESS AND PREVENTION [20.4.1.500 NMAC PART 264 SUBPART C]

The following subsections provide information on how operations at the OD Unit comply with the preparedness and prevention requirements of 2.4.1.500 NMAC 264, Subpart C.

F.1.8.1 Required Equipment [20.4.1.500 NMAC §264.32]

In accordance with the requirements of 20.4.1.500 NMAC §264.32, the OD treatment unit is equipped with or has access to internal communication equipment, fire extinguishers, and fire control and decontamination equipment. Emergency equipment available for use at the OD Unit is discussed in this section and listed in the Contingency Plan included as Attachment E.

F.1.8.2 Internal Communications [20.4.1.500 NMAC §264.32(a)]

Personnel that enter the treatment zone for inspection of operations are provided with hand-held two-way radios. Radio contact with Track Control is maintained at all times while in the restricted area.

F.1.8.3 External Communications [20.4.1.500 NMAC §264.32(b)]

External communications capabilities are provided through the base operator. Communications systems include Defense Switched Network (DSN), Base Telephone System (BTS), and the Qwest System.

F.1.8.4 Emergency Equipment [20.4.1.500 NMAC §264.32(c)]

Emergency equipment available at the OD treatment unit during operations includes fire extinguishers, two-way radios, and personnel protective equipment such as gloves and respirators. A list of available equipment is presented in the Contingency Plan included as Attachment E.

F.1.8.5 Water for Fire Control [20.4.1.500 NMAC §264.32(d)]

Due to the isolated location of the OD Unit, water for fire control is not available at this unit. However, HAFB fire department trucks are on call during treatment operations and are available for emergency response. The fire trucks can respond within minutes and provide water at adequate pressure and volume to fight any fires that may occur.

F.1.8.6 Testing and Maintenance of Equipment [20.4.1.500 NMAC §264.33]

Communications, fire protection, spill control, and decontamination equipment associated with the OD unit are tested and maintained according to the inspection schedule detailed in Attachment D of this Part B permit renewal application.

F.1.8.7 Access to Communication or Alarm Systems [20.4.1.500 NMAC §264.34]

Personnel performing treatment operations at the OD Unit have immediate access to an emergency communication device, either directly or through visual or voice contact with another individual, in accordance with 20.4.1.500 NMAC §264.34. In the event of an emergency, two-way radios and cellular phones allow personnel to contact the EOD office or the HAFB Fire Department.

F.1.8.8 Aisle Space Requirements [20.4.1.500 NMAC §264.35]

The OD unit is a vacant area that allows unobstructed movement of personnel, fire-protection equipment, and decontamination equipment to any area of the unit in the event of an emergency.

F.1.8.9 Support Agreements with Outside Agencies [20.4.1.500 NMAC §264.35]

Information on support agreements with outside agencies, as required by 20.4.1.500 NMAC §264.35 is presented in the Contingency Plan included as Appendix E of this Part B permit renewal application.

F.1.8.10 Preventive Procedures, Structures, and Equipment [20.4.1.900 NMAC §270.14(b)(8)]

In accordance with 20.4.1.900 NMAC §270.14(B)(8), a description of preventive procedures, structures, and equipment at the OD Unit is presented below.

Wastes are loaded or unloaded by properly trained EOD personnel using appropriate equipment, such as forklifts or other heavy equipment. The vehicles are driven to the locations where detonation will occur, and the wastes unloaded. Procedures to prevent incidental detonation of the waste are also applicable to spill prevention during pretreatment operations. EOD procedures to prevent accidental detonation are detailed in Air Force Publications TOs 11A-1-42 and 11A-1-60. In general, these procedures specify the use of nonsparking tools, encasement to reduce impact, use of certain clothing materials, and, most importantly, removal of primers and initial detonators from the device. The explosive nature of the waste indicates the greater hazard to be incidental detonation during transfer of waste into the detonation zone. None of the energetic waste contains free liquid.

An earthen berm that is at least 2 feet in height surrounds the OD Unit and helps prevent runoff to other areas of the facility or environment. The OD Unit is not located within the 100-year floodplain (Figure A-5); therefore, measures to prevent flooding are not necessary.

F.1.9 Operating Record

As required by 20.4.1.500 NMAC §264.73, HAFB will keep a written open detonation operating record of OD activities at the EOD administrative office. The following records will be maintained at the HAFB EOD Office:

- A description and the quantity of each hazardous waste received, as listed in Tables B-2 through B-6, Permit Attachment B, Waste Analysis Plan;
- Operating log that describes the type and quantity of hazardous waste treated in the OD treatment unit and the date the waste was detonated;
- Records and results of waste analyses performed as specified in 20.4.1.500 NMAC §264.13;
- Reports of any incidents that required the activation of the Contingency Plan;
- Inspection logs for the last three years;
- Records of monitoring, testing, analytical data, and any corrective actions taken to prevent or mitigate releases of hazardous waste to the environment;
- Training records for EOD personnel;
- Disposal requests and Land Disposal Restriction Certifications for hazardous waste transported to a permitted facility; and
- Correspondence and other documents from governmental agencies that affect the OD Unit.

F.1.9.1 Additional Reports

In compliance with 20.4.1.500 NMAC §§264.56(j) and 265.56(j), any release, fire, explosion, or other unusual occurrence that results in implementation of the Contingency Plan will be noted in the OD Unit operating record and reported in writing within 15 days to NMED.

F.1.9.2 Biennial Report

In accordance with 20.4.1.500 NMAC §264.75, a biennial report on OD treatment activities will be prepared and submitted to the Secretary of the NMED. The report will be prepared and submitted to cover facility activities at the OD Unit during the previous calendar year. The EPA identification number, name, and address of the facility will be included in the report. A description and the quantity of each RCRA-regulated explosive hazardous waste treated at the OD unit will be listed. The method of treatment and disposal for each RCRA-regulated explosive hazardous waste will be described.

EXHIBIT F-1

20,000-Pound Open Detonation Range Checklist

Holloman Air Force Base

EXHIBIT F-1

20,000-Pound Open Detonation Range Checklist

EXHIBIT F-1

20,000-PoundOpen Detonation Range Checklist

Event#: _____

Operation Type: _____

Dates: _____

Team Chief: _____

I, _____, certify that all items/actions required by permit for the 20,000-pound open detonation treatment unit have been completed.

_____
(Team Chief Signature)

_____
(Management Signature)

Weather Log

Base Weather Service: _____

Name of Person Entering Data: _____

Date and Time Data is entered: _____

Date of Detonation Event: _____

Exact Time of Detonation: _____

Record of Weather Data Collected before Detonation

Qualitative description of the Weather (e.g., sunny, warm, rain)	
Temperature	
Wind Speed	
Wind Direction	
Atmospheric Stability	
Precipitation (e.g., no precipitation, light rain, snowing)	
Other Comments	

Pre- and Post- Detonation Checklists

Two Weeks in Advance of Scheduled Detonation

Checklist Items	**Name:** **Date:** **Time:**	**Corrective Action**
EOD Team Chief selects EOD team		
EOD Team Chief conducts briefing with team (including hazards involved with OD, treatment procedures, TOs, safety, and transportation procedures)		
EOD Team: ▪ Conducts a range inspection for free-standing liquids, unexploded munitions, vegetation, burrowing, and signs of runon/runoff to OD unit ▪ Inspects the road to the OD unit for holes, ditches, and settling that could cause problems during the transportation of munitions ▪ Identifies items listed for treatment ▪ Identifies proper disposal techniques ▪ Calculates the total mass being detonated, ensuring total doesn't exceed 20,000 lb NEW per event ▪ Contacts flight munitions custodian to notify of explosive requirements (how much C-4 needed) ▪ Ensure that explosives will be on hand prior to scheduled operation		

EOD Team Inspections: ▪ Emergency response equipment ▪ Safety equipment ▪ Security devices ▪ EOD vehicles ▪ Operating equipment		

Pre- and Post-Detonation Checklists

One Week in Advance of Scheduled Detonation

Checklist Items	**Name:** **Date:** **Time:**	**Corrective Action**
EOD Team: ▪ Verifies items that will be treated. ▪ Makes sure Munitions has a sufficient supply of explosives for the operation. ▪ Checks calculations on the amount of necessary explosives and Net Explosive Weight.		

Pre- and Post-Detonation Checklists

Day Before Scheduled Detonation

Checklist Items	**Name:** **Date:** **Time:**	**Corrective Action**
EOD Team Chief ▪ Briefs team on pending operations and team assignments		
EOD Team: ▪ Contacts Munitions to draw explosive materials and ensure delivery time of munitions and waste will be met ▪ Inspects all necessary equipment to ensure operability ▪ Notifies Base Fire Department ▪ Notifies Base Medical Services ▪ Notifies Security Police ▪ Notifies Base Operations Staff ▪ Notifies Base Environmental Coordinator ▪ Contacts base meteorology team to obtain a forecast of predicted weather conditions for the following day and notify them of the operation ▪ Ensures that explosives will be on hand prior to scheduled operation		

EOD Team Inspections: ▪ Emergency response equipment ▪ Safety equipment ▪ Security devices ▪ EOD vehicles ▪ Operating equipment		

Pre- and Post-Detonation Checklists

Day of Detonation

Checklist Items	**Name:** **Date:** **Time:**	**Corrective Action**
EOD Chief: ▪ Conducts a safety briefing will all team members including review of requirements and procedures for safely transporting explosives ▪ Provides arms to personnel who will be transporting explosives and conduct a briefing on the use of the firearms ▪ Ensures that radio comm. lines are open with the EOD Team during the drawing and transportation of explosive materials ▪ Supervises the munitions loading operations ▪ Monitors and identifies deficiencies and refuse treatment if discovered ▪ Ensures that all Emergency Equipment (first aid kit, shovels, fire extinguishers, etc.) are on hand or on standby ready to respond		
EOD Team: ▪ Contacts base meteorology team to ensure that all weather conditions meet permit terms (i.e., wind speed, direction, temp., precipitation) ▪ Records weather conditions as shown in the weather log ▪ Transports munitions and explosives to OD unit		

▪ Conducts final inspection of the OD unit ▪ Makes radio contact with Test Track Control and EOD ops center ▪ Ensures that mobile two-way radios are placed in appropriate locations (with team members, track control net, team chief, and safety observer) ▪ Conducts a physical inspection of all munitions brought for treatment ▪ Compares inventory list with letter of disposal request to ensure all items are accounted for. Only items identified on the letter of request can be treated-all others will be refused and returned to Munitions storage for reschedule ▪ Places items in the area for treatment ▪ Segregates initiation explosives ▪ Sets up dual-primed firing systems to initiate the main charge ▪ Checks firing systems in primed positions ▪ Obtains approval for detonation from the Holloman tower via Test Track Control		

Pre- and Post-Detonation Checklists

Within 72 Hours after Detonation Occurs

Checklist Items	**Name:** **Date:** **Time:**	**Corrective Action**
EOD Team Chief ▪ Signs required documentation (i.e., expenditure report) within 24 hours of the OD event and places a copy in the facility file		
EOD Team: ▪ Collects any UXO and re-detonates it immediately ▪ Collects any metals fragments and remnants ▪ Places fragments in a container and handles items as hazardous waste ▪ Cleans and inspects all EOD vehicles and other equipment ▪ Arranges to backfill depressions and grade area (unless OD event is the last event in the quarter) ▪ Prepares EOD report including an inventory list of the detonated items, Net Explosive Weight, and names of participating EOD personnel		

DRAFT
ATTACHMENT G

CLOSURE AND POST-CLOSURE PLAN

HOLLOMAN AIR FORCE BASE
OPEN DETONATION TREATMENT UNIT

Permit No. NM6572124422

ATTACHMENT G
CLOSURE AND POST-CLOSURE CARE PLANS

INTRODUCTION

This Closure Plan describes the activities necessary to close the 20,000-Pound Open Detonation (OD) Unit at Holloman Air Force Base (HAFB). This Closure Plan has been prepared in accordance with New Mexico Hazardous Waste Management Regulations in Title 20, Chapter 4, Part1, Subpart V of the New Mexico Administrative Code (20.4.1.500 NMAC), incorporating Title 40 Code of Federal Regulations (CFR) §§264.110 through 264.115, Subpart B and 20.4.1.900 NMAC, incorporating 40 CFR §§270.14(b)(13) and 270.14(b)(15) through (18). A copy of the Closure Plan will be kept on file at HAFB until final closure of the unit is completed and certified in accordance with 20.4.1.500 NMAC, incorporating 40 CFR §264.115.

Until final closure of the OD treatment unit is complete and has been certified in accordance with 20.4.1.500 NMAC, incorporating 40 CFR §264.115, a copy of the approved plan and all approved revisions will be on file at the HAFB 49 CES/CEV and available to the Secretary of the New Mexico Environment Department (NMED) or the U.S. Environmental Protection Agency (EPA) Regional Administrator upon request.

G.1 CLOSURE PERFORMANCE STANDARD

This 20,000-Pound OD Unit will be closed to meet the following performance standards:

- Ensure that the 20,000-Pound OD Unit will not require further maintenance and controls,
- Minimize and eliminate threats to human health and the environment, prevent the release of hazardous wastes, hazardous constituents, or waste decomposition products to soils, surface waters, groundwater or the atmosphere, and
- Comply with the applicable closure and post-closure requirements of 20.4.1.500 NMAC Part 264, Subparts G and X.

In order to achieve this standard, measures taken during the active life and those that will be conducted during closure have been formulated specifically to address these criteria.

G.2 SUMMARY OF SAMPLING ACTIVITIES CONDUCTED DURING ACTIVE LIFE

During the active life of the OD Unit, the post-treatment residuals and soils will be sampled annually to demonstrate treatment effectiveness and ensure that residuals are nonhazardous. During the interim period between treatment events, the unit will be periodically graded, and residuals in the soil, if any, will remain covered to retard leachate formation and prevent wind dispersal. Soils in the OD Unit will be sampled annually for characteristics of hazardous waste and suspected hazardous constituents, as specified in the Sampling and Analysis Plan (SAP), Permit Attachment H. The SAP documents all of the protocols used during active-life sampling events.

G.3 SUMMARY OF CLOSURE ACTIVITIES

G.3.1 FINAL CLOSURE ACTIVITIES

At the conclusion of the final OD treatment event, the site will be inspected and all debris will be removed. Following these activities, representative samples from across the entire 20,000-Pound OD Unit will be collected and analyzed to determine the residual concentrations of any toxic metals and explosive compounds, if any. These analytical results will be compared with NMED Site Screening Levels (SSLs) and background levels for metals, or risk-based criteria deemed to be protective of human health. If all levels are determined to be below background (for metals) or SSLs, the closure will be considered clean closure. If levels are detected in excess of background or SSLs, but are below risk-based criteria, the closure will be considered a risk-based closure.

In the event that an area of the unit is determined to contain levels in excess of risk-based criteria, further action will be taken as necessary in coordination with NMED prior to completing closure, such as risk assessment, delineation of the extent of the exceedence, analysis of corrective measures, and corrective measures implementation. When all such activities have been completed as required, and all samples show that the residual levels of contamination are below the risk-based criteria, all remaining closure and post-closure activities will be completed, including grading and decontamination. Certification of closure will be submitted to NMED within 60 days of completion of closure activities. More detailed descriptions of the specific activities that will be conducted to ensure that the closure performance standard is met are presented in the following sections.

G.3.2 PARTIAL CLOSURE ACTIVITIES

Since it is anticipated that the unit will be 100 percent in use during the life of the unit, there will be no partial closure of the OD Unit and only the complete closure of this facility will be addressed.

G.3.3 MAXIMUM WASTE INVENTORY

Operating practice precludes the storage of hazardous wastes at the 20,000-Pound OD Unit. Standard Operating Procedures are detailed in permit Attachment F. For safety reasons, waste munitions will be treated as received or as generated, and no other wastes are stored at the site. During operation, the maximum amount of hazardous wastes treated during a single OD event at any time during the life of the facility is 20,000 pounds net explosive weight of waste munitions. No waste munitions will be present at the site upon initiation of closure activities.

G.3.4 SCHEDULE FOR CLOSURE

As specified in 20.4.1.200 NMAC §261.113(b), closure activities at the 20,000-Pound OD Unit will be completed within 180 days of treating the final volume of hazardous waste. No extension beyond the 180 days provided is being requested at this time; however, if it is determined that an extension is needed, this plan will be modified. Notification of intent to close will be submitted to the NMED, Hazardous Waste Bureau. Table G-1 presents an estimated closure schedule.

G.3.5 AMENDMENT OF THE CLOSURE PLAN

In the event an amendment of the Closure Plan is necessary, HAFB will submit a written notification of a request for a permit modification in accordance with 20.4.1.500 NMAC §264.112(c). HAFB will submit a notification to NMED or request a permit modification to revise the approved closure plan if:

- There are changes in the operating plans, procedures, or facility design that affect the closure plan,
- There is a change in the expected year of closure, or
- During implementation of closure activities, unexpected events require a modification of the approved closure plan.

In accordance with 20.4.1.500 NMAC §264.112(c)(3), HAFB will submit a permit modification request along with a copy of the amended Closure Plan at least 60 days prior to the proposed change in facility or operation, or no later than 60 days after the occurrence of an unexpected event that affects the closure plan. If an unexpected event occurs during the final closure period, the permit modification will be requested no later than 30 days after the unexpected event. If NMED requests modifications to the plan under the conditions described in 20.4.1.500 NMAC §264.112(c)(4), HAFB will submit the modified plan within 60 days of the request or within 30 days if the change in facility condition occurs during the final closure period.

G.3.6 CLOSURE AND POST-CLOSURE COST ESTIMATE, FINANCIAL ASSURANCE, AND LIABILITY REQUIREMENTS

As a federal facility HAFB is exempt from the cost estimate, financial assurance, and liability insurance requirements of 20.4.1.500 NMAC Part 264, Subpart H. According to 20.4.1.500 §264.140 (c), federal facilities are exempt from this requirement.

G.4 CLOSURE PROCEDURES

When the decision is made to close the OD Unit, all hazardous waste present at the site will be treated or removed before closure activities commence. To the extent possible, all contaminated structures and equipment will be decontaminated and removed. Any structures and equipment that cannot be decontaminated shall be dismantled, placed into containers, and managed as hazardous waste. However, as shown on Figure A-3, the fence, gates, and signs are the only on-site equipment at the unit, and they are not contaminated. Although HAFB intends to leave the fence in place after closure, the signs will be removed from the fencing after closure since the OD Unit will be clean closed.

As outlined in Section G.3.2 above, the steps to achieve the closure standard include site reconnaissance, removal of scrap materials and debris, closure sampling and analysis, risk-based screening, corrective action (if needed), surface grading, decontamination, and closure certification. Appropriate personal protective equipment (PPE) will be worn during each of these steps. Each step is discussed in detail below.

G.4.1 SITE RECONNAISSANCE

The first phase of closure will consist of a hazards survey or visual site inspection (VSI) of the OD Unit conducted by HAFB EOD and industrial hygiene personnel. The purpose of the survey will be to identify potential contamination concerns that may present hazards to workers during the closure activities and to specify any control measures necessary to reduce worker risk. The hazards survey will consist of a VSI to identify the location of any scrap materials, debris, or any other substances that may impede closure of the unit. All materials that need to be removed prior to proceeding with closure will be documented in a field inspection logbook. The VSI will provide the information necessary for industrial hygiene personnel to identify worker qualifications, PPE, safety awareness, work permits, exposure control programs, and emergency coordination that will be required to perform closure. All workers involved in the closure activities will be required to have training and medical monitoring as required by applicable regulations. Personnel performing closure activities will be required to wear PPE as specified by industrial hygiene personnel.

G.4.2 REMOVAL, DISPOSAL, AND DECONTAMINATION OF EQUIPMENT

Based on the VSI, any identified scrap, debris, or other substance that could impede closure of the unit will be removed and disposed of in accordance with applicable regulatory requirements. Because treatment may not render all the treated waste munitions nonhazardous, all fragments of unexploded ordnance, scrap materials and debris will be containerized and managed as appropriate. Disposable PPE will also be placed in containers and managed appropriately. Tools and equipment used during the decontamination of the OD Unit will be scraped if necessary to remove residue. Following this, the equipment will be cleaned with detergent and water solution and rinsed with clean water. The wash and rinse water will be containerized and samples collected for analyses. The samples will be analyzed for the parameters listed in Table G-1 and disposed of in accordance with regulations.

G.4.3 SOIL SAMPLING AND ANALYSIS

Following the final OD operational activities specified, representative soil samples from the 20,000-Pound OD Unit will be collected and analyzed to determine the residual concentrations of any toxic metals and high explosive compounds.

Discreet soil samples will be collected from the OD Unit. All samples will be taken using a non-sparking (plastic) scoop, hand auger, or other sampling device if so directed by the EOD. Sampling personnel will record the location of each sample with respect to permanent stations (or through global positioning system surveying), the date, names of sampling personnel, and other pertinent information. Permit Attachment H (Sampling and Analysis Plan) presents the Quality Assurance Project Management plan.

Surface soil samples will be collected from the most recent blast depression at a depth between surface and 12 inches, and from the surrounding area at the following locations:

- One discrete sample at the bottom of the depression from most recent detonation event,

- Three discrete samples from the sides of the depression from the most recent detonation event,
- Four discrete samples from the area within a 100-foot radius of the depression from the most recent detonation event to evaluate the effect of kick-out,
- Four discrete samples from the area between a 100-foot radius and 250-foot radius from the depression caused by the most recent detonation event,
- A minimum of one duplicate sample and one matrix spike/matrix spike duplicate (MS/MSD) sample.

Observations from the VSI, as well as historical quarterly sampling results, will be used to determine sample locations in the area outside the depression. This approach will account for the spacing of previous samples and identify areas where additional sampling will be required. Once sampling locations have been determined, samples will be collected from the surface interval (0 to1 foot) at each of these locations and sent to an approved laboratory for analysis.

Analyses to be performed will include:

- SW6010 Antimony, arsenic, barium, beryllium, cadmium, chromium, copper, lead, nickel, selenium, and silver;
- SW7471 Mercury;
- SW8330 Explosives.

Because no materials other than waste munitions will be treated at the OD Unit, no other analyses will be required. A complete description of the sampling and analysis protocol and rationale, including that to be followed during closure, is provided in Permit Attachment H.

G.4.4 BACKGROUND COMPARISON AND RISK-BASED SCREENING

Following sampling and analysis, the analytical results will be compared with the latest update to the NMED industrial SSLs for soils and the site-specific background results for metals. In the event that a sample or area of the OD Unit is determined to contain hazardous constituent levels in excess of these standards, NMED will be contacted to discuss further action prior to completing closure, such as risk assessment, confirmation sampling, delineation of the extent of the exceedence, analysis of corrective measures, and corrective measures implementation. When all such activities have been completed (as required) and all sample results show that the residual levels of contamination are below the risk-based criteria or are protective of human health and the environment, all remaining closure activities will be completed.

G.4.5 CORRECTIVE ACTION

If any sample or area is determined to contain contaminant concentrations in excess of the risk-based or cleanup levels, HAFB will submit a Corrective Action Workplan to NMED. Possible corrective actions could include risk assessment, confirmation sampling, delineation of the extent of the exceedence (i.e., contamination plume), analysis of corrective measures, and corrective

measures implementation. Any hazardous investigation-derived waste and/or remediation waste that is generated and exceeds the risk-based criteria will be stored at the HAFB Defense Reutilization and Maintenance Organization facility prior to shipment to an authorized disposal facility using an authorized transporter.

G.4.6 SITE RESTORATION

Once all scrap materials and any other debris have been removed, and sampling results indicate that all remaining analytes are below health-based criteria, the unit will be graded to manage surface water infiltration and run-off while controlling erosion. Specifically, surface grading will reduce ponding and run-off velocities that can contribute to soil erosion, and will roughen and loosen soils to facilitate natural revegetation.

In addition to the closure activities specified in earlier paragraphs, other tasks will be performed to ensure that the closure activities satisfy the closure performance standard. These tasks include periodic regrading, if needed, maintenance to retard erosion and run-on/run-off, and continued posting and security measures.

G.4.7 CLOSURE REPORT

Following completion of closure activities, a closure report will be submitted to the Secretary of NMED. The report will document the closure and will include the following:

- Certification of closure as described in Section G.4.9,
- A summary of closure activities,
- A summary of the sampling performed,
- Analytical results and comparison of the results with NMED SSLs, and background (for metals),
- Quality assurance/quality control measures,
- Any significant deviations from the Closure Plan and reasons for the change,
- Documentation on disposal of wastes generated during closure, and
- A certification of the accuracy of the report.

G.4.8 CONTINGENT POST-CLOSURE PLAN

Because some residues may remain in place, this contingent post-closure plan provides a description of the activities that may be conducted to ensure long-term reliability and effectiveness of the closure.

G.4.8.1 Post-Closure Care and Use of Property

The following sections describe the post-closure care period, site security during the post-closure period, and the post-closure use of the subject OD Unit.

G.4.8.2 Post-Closure Care Period

If any waste residues are left in place, contingent post-closure care activities will be required to ensure the long-term integrity of the closure and continued protection of human health and the environment. However, several factors suggest that the duration of any post-closure activities might be limited, including the following:

- The treatment activities render the waste munitions non-hazardous;
- The risk-based closure activities ensure that no residues remain in concentrations exceeding established health-based criteria;
- The nature of the treatment, the waste residues, and the closure approach substantially minimize the likelihood of any contaminant migration; and
- Groundwater beneath HAFB has been designated by NMED as unfit for human consumption due to levels of total dissolved solids that exceed human health standards.

Therefore, post-closure care of the subject OD Unit and groundwater monitoring at the site may continue for a period of up to 30 years after closure certification verification and issuance of a Post-Closure Care Permit under the provisions of 20.4.1.500 NMAC §264.117.

G.4.9 Closure Certification

Within 60 days after completion of closure activities for the OD Unit, HAFB will submit to the Secretary of NMED, via certified mail, a certification that the unit has been closed in accordance with the specifications of this Closure Plan. The certification will be signed by an authorized official of HAFB and by an independent New Mexico registered professional engineer.

G.4.9.1 Post-Closure Security

Although the closure plan will ensure that all contaminants are reduced to levels protective of human health and the environment and will minimize the potential for contaminant migration, because some residual contamination may remain in place, security that was used for the management of hazardous wastes will be provided during the contingent post-closure period to prevent access to the OD Unit.

The security mechanisms that will be in-place during the contingent post-closure period will include the following:

- Use HAFB's existing 24-hour security system (i.e., guards making routine rounds) to provide periodic monitoring of the unit; and
- Access control to the Base via fence, gate, and other entry control devices.

In addition to these measures, the 20,000-Pound OD Unit will be clearly posted with signs that state, "DANGER -- UNAUTHORIZED PERSONNEL KEEP OUT." These signs will be posted at all entrances and at other locations so as to be seen from any approach to the unit. The legend

will be written in English, Spanish, German, and Apache and will be legible from a distance of 25 feet.

G.4.9.2 Post-Closure Use of Property

Uses of the property during the Post-Closure Care period will be in compliance with 20.4.1.500 NMAC §264.117(c) and may not result in the disturbance of the final grading or vegetative cover. Post-closure use resulting in any disturbance will require a modification to the Post-Closure Care Permit and be allowed only to protect human health and the environment.

G.4.9.3 Post-Closure Care Plan and Ground Water Monitoring

Post-Closure care of the OD Unit will be conducted when it has been established that clean closure cannot be achieved. Four ground water monitoring wells MW-01 (upgradient) and MW-02, MW03, and MW-04 (downgradient) will be installed (See Figure A-3). The ground water monitoring will be conducted for 30 years from the time of closure completion. Based on the results of monitoring, HAFB may request termination or reduction of the monitoring period.

G.4.9.4 Post-Closure Maintenance Requirements

The majority of maintenance activities will be contingent upon the results of routine (quarterly) inspections. Maintenance activities include maintaining all site markings and other benchmarks, access control devices, and postings. Table G-2 outlines these activities and frequency of occurrence.

G.4.9.5 Certification of Post-Closure Care

As with the closure plan, certification that all contingent post-closure activities for the 20,000-Pound OD Unit were performed in accordance with the specifications in the approved Post-Closure Care Plan will be submitted by registered mail to NMED no later than 60 days following completion of all post-closure activities (20.4.1.500 NMAC §264.120). The certification will be signed by an authorized official of HAFB and an independent New Mexico registered professional engineer. Documentation supporting the independent professional engineer's certification will be furnished to the NMED upon request.

G.4.9.6 Survey Plat and Post-Closure Notices

As specified in 20.4.1.500 NMAC §§264.116 and 264.119, a survey plat and deed notification will be necessary to satisfy the closure and any contingent post-closure care requirements. Therefore, upon completion of all closure activities, a survey plat delineating the boundary of the closed 20,000-Pound OD Unit with the certification of closure will be submitted to the local zoning authority, the NMED, and the EPA. Following closure and post-closure care activities, HAFB's deed will be amended to record the closed unit. This deed recordation will, in perpetuity, notify any potential purchaser of the property that the land has been used in the management of hazardous waste and its use is restricted as specified in 20.4.1.500 NMAC §264.119.

Table G-1 Estimated Closure Schedule for the 20,000-Pound OD Unit

Closure Activity	Closure Period (Days)
Receive and treat final volume of waste	-10 to 0
Closure begins	0
Perform site reconnaissance	0 to 5
Remove scrap	5 to 15
Perform soil sampling and analysis	15 to 50
Address any exceedences of standard (if any)	50 to 130
Grade	130 to 140
Decontaminate equipment	140 to 150
Prepare closure certification/post-closure documentation	150 to 180
Submit closure certification/post-closure documentation	180
NMED issues post-closure permit	180 to 235
Conduct post-closure care activities	To Be Determined

Table G-2 Required Maintenance Activities and Schedule

Area/Equipment	Specific Items	Types of Problems	Corrective Action	Frequency of Inspection
Security Devices	Fence	Broken/Damaged	Repair immediately if damaged	Quarterly
	Access Gate	Locking mechanism jammed	Repair/replace	Quarterly
	Signs	Illegible	Replace	Quarterly
Final Cover/Grading	Cover/Grading Integrity	Subsidence, excessive bare soil, rodent burrows	Restore site to grade	Quarterly (immediately following any 10-year, 24-hour intensity rainfall event)
Run-on/Run-off Drainage Control	Drainage sloping and channels	Settlement, ponded water, blockage, erosion	Repair settlement and erosion, remove blockages	Quarterly
Benchmarks	Not applicable	Damaged	Replace if damaged	Quarterly

DRAFT
ATTACHMENT H

SAMPLING AND ANALYSIS PLAN

HOLLOMAN AIR FORCE BASE
OPEN DETONATION TREATMENT UNIT

Permit No. NM6572124422

PERMIT ATTACHMENT H
SAMPLING AND ANALYSIS PLAN

This Sampling and Analysis Plan (SAP) describes the procedures used to characterize soil disturbed by open detonation (OD) activities at the Holloman Air Force base (HAFB) 20,000-Pound OD unit. The SAP addresses the applicable waste analysis requirements in the New Mexico Administrative Code, Title 20, Chapter 4, Part 1, Subpart V (20.4.1.500 NMAC), incorporating Title 40 Code of Federal Regulations (CFR) §§264.13 and 264.602, 20.4.1.900 NMAC, incorporating 40 CFR §270.14(b), and 20.4.1.800 NMAC, incorporating 40 CFR Part 268. The Waste Analysis Plan (WAP) included as permit Attachment B describes the procedures for characterization of the wastes treated at the OD Unit. This SAP describes the methodology for sampling and analysis of the soil disturbed by OD activities and the waste residues from OD events.

H.1 INTRODUCTION

The OD Unit at HAFB is permitted as a Subpart X miscellaneous unit, and is used to treat explosive hazardous waste to remove the hazardous characteristics of reactivity and ignitability. Environmental sampling is necessary for HAFB to demonstrate that the OD Unit is being operated in such a manner that residual waste constituents are not contaminating soils above risk-based cleanup levels and/or background levels. Background sampling to establish site-specific background constituent concentrations was performed following approval of the original permit in 1997. During the operational life of the OD Unit, soil sampling and analysis will be performed on an annual basis in accordance with the procedures of this SAP. This SAP contains sampling and analysis protocols for the following two distinct phases of environmental sampling at the subject OD Unit:

1. Routine, or operations sampling to test the soils at the OD Unit for the effectiveness of the treatment process and to ascertain whether any contamination has impacted ambient soils; and

2. Closure sampling to be completed in the event that HAFB terminates operations at the OD Unit.

H.1.1 SITE DESCRIPTION

The physical description of the OD Unit, location, and the environmental conditions, including geology, hydrogeology, topographic and drainage features, and climate at HAFB, are described in Permit Attachment A, Facility Description.

H.2 BACKGROUND SAMPLING

Background sampling was performed following approval of the OD permit in February 1997. The sampling included the collection of six soil samples at a distance of between 500 feet and 1000 feet from the OD Unit boundary. These samples were used to characterize conditions of soil similar to the OD Unit, but unaffected by past OD activities. Based on the background sampling performed in December 1997, background concentrations were established for explosive compounds and metals. The established background levels are listed in Table H-1.

Table H-1 Site-Specific Background Levels, 20,000-Pound Open Detonation Unit Holloman Air Force Base

Parameter	Site-Specific Background Level [1] mg/kg	NMED SSL[2]
Antimony	3.5279	31.3
Arsenic	1.4963	3.9
Barium	79.4971	5450
Beryllium	0.42	156
Cadmium	0.5417	74.1
Chromium	9.5027	234
Copper	9.1595	3130
Lead	7.6508	400
Nickel	6.5898	1560
Selenium	2.2645	391
Silver	0.7328	391
Mercury	0.0269	6.11
1,3,5-Trinitrobenzene	NA	NA
1,3-Dinitrobenzene	NA	NA
2,4-Dinitrotoluene	NA	120000
2,6-Dinitrotoluene	NA	NA
2-Amino-4,6 dinitro	NA	NA
4-Amino-2,6-dinitro	NA	NA
HMX	NA	3000000
m-Nitrotoluene	NA	410000
Nitrobenzene	NA	21800
Nitroglycerine	93677.2	347000
o-Nitrotoluene	NA	410000
PETN	61300	NA
p-Nitrotoluene	NA	410000
RDX	NA	4420
Tetryl	NA	NA
TNT	NA	30000

[1] Final Background Study, 20,000-Pound Open Detonation Unit, 1997.
[2] New Mexico Environment Department Soil Screening Levels, February 2004, Revision 2.

H.3 SUMMARY OF HISTORIC SAMPLING DATA

HAFB has been performing quarterly sampling of soils at the OD unit for the past 8 years. As required by the permit, soil sampling is performed following the first OD event of each quarter. Soil samples are analyzed for explosive compounds and metals. Analytical results are compared with established site background concentrations and NMED Site Screening Levels (SSLs), which are health-based action levels established by NMED. Based on the sampling performed, analytical results for all constituents are below the SSLs. The analytical data suggest that constituent concentrations in soils at the OD Unit are below levels that are protective of human health. Analytical data for the past six sampling events is presented in Exhibit H-1.

H.4 SAMPLING AND ANALYTICAL PROCEDURES

This section describes procedures and methods for sampling and analyzing surface soil samples from the HAFB OD Unit. This SAP design is based on U.S. Air Force (USAF) OD operational procedures, knowledge of the waste munitions characteristics, and the environmental conditions at HAFB. In addition, the procedures and quality assurance/quality control (QA/QC) techniques in U.S. Environmental Protection Agency's (EPA's) November 1986 *Test Methods for Evaluating Solid Waste* (SW-846) have been used to prepare this SAP. Other applicable methods in SW-846 (1986 and approved updates) may be used if these are shown to be more appropriate based on site conditions and experience.

H.4.1 SAMPLING LOCATIONS

Surface soil samples will be collected from the 0- to 6-inch depth interval at nine locations and analyzed for the explosive compounds and metals listed in Table H-2. For the purpose of sampling, the OD Unit will be divided into two strata, as follows.

Table H-2 Analytical Methods for Soil Samples

Parameter/Constituent	EPA Hazardous Waste Number	Test Method	Reference
Explosive Compounds	D003	8330	Test Methods for Evaluating Solid Waste, Physical and Chemical Methods, EPA SW-846, 3rd Ed. November 1986 (amended).
HMX RDX 1,3,5-Trinitrobenzene (TNB) 1,3-Dinitrobenzene (DNB) Tetryl Nitrobenzene (NB) Nitroglycerine 2,4,6-TNT 2,4-DNT 2,6-DNT 2-Nitrotoluene (NT) 3-NT 4-NT			
Toxic Metals			Test Methods for Evaluating Solid Waste, Physical and Chemical Methods, EPA SW-846, 3rd Ed. November 1986 (amended).
Antimony	---	6010	
Arsenic	D004	6010	
Barium	---	6010	
Beryllium	---	6010	
Cadmium	D006	6010	
Chromium	D007	6010	
Copper	---	6010	
Lead	D008	6010	
Mercury	D009	7471	
Nickel	---	6010	
Selenium	D010	6010	
Silver	D011	6010	
Soil Moisture	---	3550	Test Methods for Evaluating Solid Waste, Physical and Chemical Methods, EPA SW-846, 3rd Ed. November 1986 (amended).

- Stratum A: The depression caused by the detonation will be identified as Stratum A. A cross-sectional view of the OD Unit and Stratum A are shown in Figure H-1.

- Stratum B: The area of detonations is identified as Stratum B. This is the area between the depression and the edge of the active detonation area. Stratum B encompasses an area with a 100-foot diameter around the depression caused by the detonation.

Surface soil samples will be collected from the most recent depression (blast pit) at a depth between the surface and 6 inches deep, and from the same depth in the area around the depression at the following locations (nine normal samples, one field duplicate, and one MS/MSD sample):

Stratum A:

- One discrete sample at the bottom of the most recent depression caused by the detonation,

- Four discrete samples from the sidewalls of the most recent depression (one sample from each of the compass directions), and

Stratum B:

- Four discrete surface soil samples from random locations within a 100-foot diameter area around the depression to evaluate the effect of kick-out. The sample depth will be in the 0- to 6-inch interval as in Stratum A.

Samples from the depression (Stratum A) would be representative of soil directly affected by detonation events. Samples from Statum B would contain fallout close to the detonation area. Since the detonations are positioned at different locations during each event, this strategy will allow evaluation of a large portion of the site over time.

H.4.2 SAMPLING FREQUENCY

Surface soil sampling at the OD Unit will be performed annually after the first detonation event. The operational monitoring sampling must occur within two weeks after a detonation and no site work (backfill, excavation, or construction) will be performed during the time between the last detonation event and the sampling.

If no treatment events occur within a 12-month period after the last annual sampling event, annual sampling will not be conducted for that period. HAFB will notify NMED if such a situation arises.

H.4.3 SAMPLE COLLECTION

This subsection details sampling procedures.

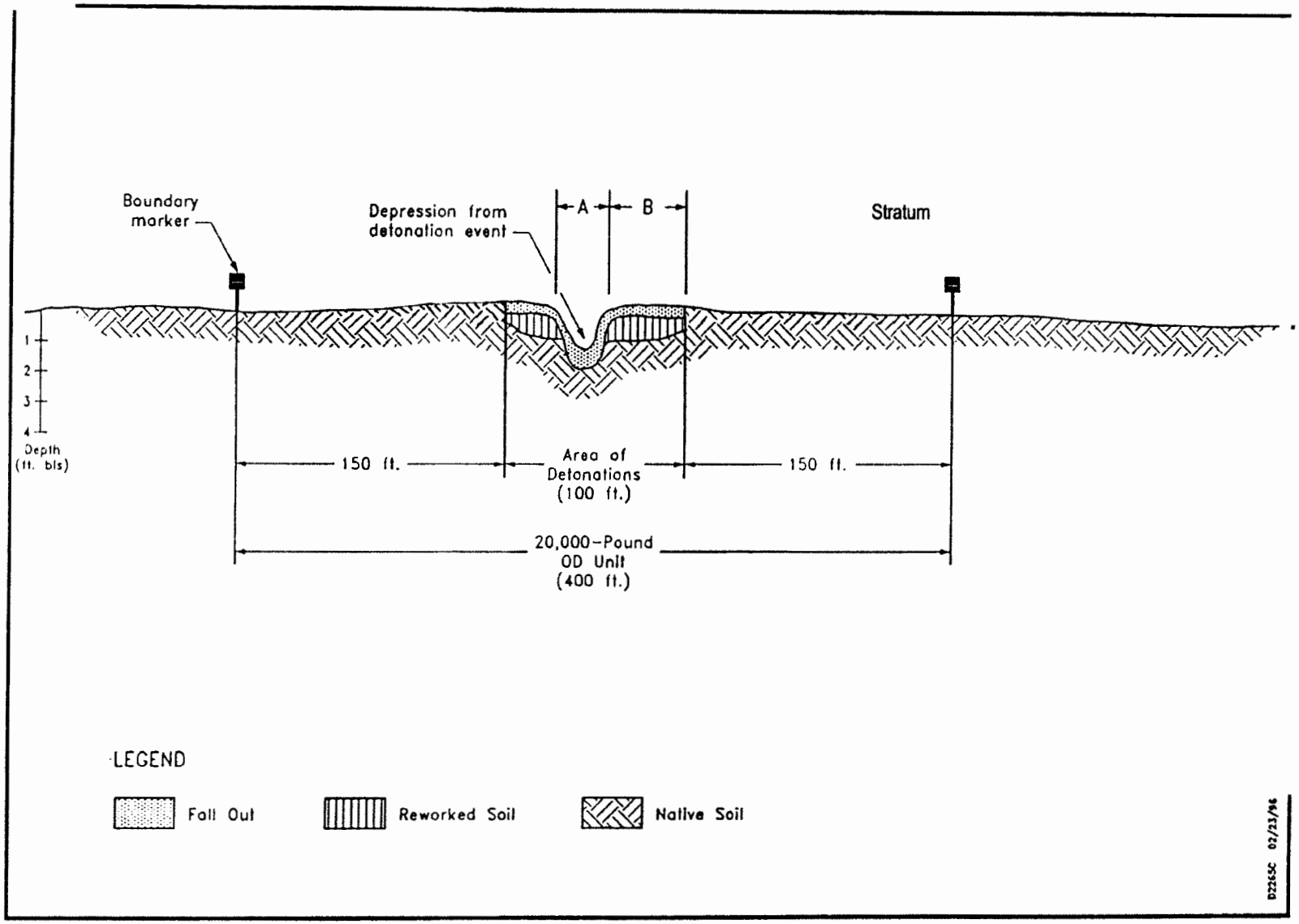

Figure H-1 Cross-Sectional View of OD Unit and Strata

H.4.3.1 Sampling Personnel

Sampling at the OD unit will be performed by qualified personnel whose qualifications include the following:

- At least one year's experience in environmental sampling techniques that include soil sampling methodologies.
- At least a high school diploma, and the sampler must have successfully completed an EPA-approved Hazardous Waste Operations and Emergency Response Course.
- An annual review of the initial training or refresher training for all personnel who continue in EOD assigned duties.

H.4.3.2 Sample Collection

Surface soil samples will be collected in accordance with USAF operational procedures and guidelines, EPA's SW-846, American Society for Testing and Materials procedures, or other NMED-approved methods. Prior to sample collection, sampling personnel will move aside debris, rocks, and other material from the sampling location. Surface soil samples will be collected using clean metal or plastic scoops, trowels, or similar equipment. Nonsparking equipment will be used, if required by EOD personnel for worker safety.

H.4.3.3 Contamination Control Procedures

Sampling tools and equipment will be protected from contamination sources before sampling and decontaminated before and between sampling points. Sample containers will also be protected from contamination sources. Sampling personnel will wear clean chemical-resistant gloves when handling the sampling equipment and samples. Gloves will be decontaminated or disposed of between samples.

To prevent cross contamination, non-disposable sampling equipment will be subject to decontamination procedures following each sample collected at each location. Sampling equipment will be decontaminated in a decontamination zone by being:

- Brush-scrubbed in tap water and Liquinox detergent wash in a tub to remove any soil from the equipment;
- Rinsed in tap water in a separate tub;
- Rinsed with deionized water;
- Rinsed with isopropanol;
- Air-dried in an area upwind of the decontamination process; and
- Stored for future sampling after being wrapped in aluminum foil (shiny side out).

In addition, sampling will first occur in those areas suspected as having the least contamination (Stratum B) and proceed to those areas suspected of having a greater possibility of contamination (Stratum A).

H.4.3.4 Health and Safety Procedures

Personnel performing sampling activities will use personal protective equipment such as rubber gloves, boots, aprons, Tyvek coveralls, and eye protection. Personnel will not be permitted to conduct any sampling until they have been cleared by EOD personnel and the high-speed test track control.

Sampling personnel will be properly trained in hazardous waste and soil sampling, and have a minimum of one year of sampling experience. Personnel will also have 40-hour 29 CFR 1910.120 Occupational Safety and Health Administration (OSHA) training and appropriate medical monitoring and certification. Sampling personnel will also be informed by HAFB EOD personnel on the hazards of sampling soil disturbed by explosive compounds.

H.4.3.5 Chain-Of-Custody Procedures

Chain-of-custody (COC) procedures will be followed to track possession of the samples from the time they are collected in the field until the analytical data from the samples are received and recorded. For all soil samples, procedures will begin once sampling is complete. A sample will be considered under custody if it is:

- In the possession of the sampling team;
- In view of the sampling team;
- Placed in a secure area by the sampler; or
- Transferred to a secure area.

An area is considered secure only when it is locked and access is controlled. The sampling team leader is responsible for custody of the collected samples in the field until they have been properly transferred to the shipping coordinator, who is responsible for sample custody until the samples are properly packaged, documented, and released to a courier or directly to the contract analytical laboratory. A triplicate COC record form will be used for the sampling effort.

H.4.3.6 Sample Container and Preservation Requirements

Samples will be collected in pre-cleaned sampling containers and will be kept cold during transportation and shipping. Table H-3 summarizes the containers, preservation, and holding time requirements for the samples to be collected. Laboratory-specific container requirements will be verified with the contracted analytical laboratory prior to sample collection.

H.4.3.7 Packaging and Transportation

At the end of each sampling day, samples will be packaged in shipping containers with double-bagged ice packs to maintain a temperature of less than 4°C. The samples will be carefully packaged so that they will not break during shipping, and packaging will contain absorbent

material capable of containing all liquid. Each shipping container will be sealed with custody seals and shipped to the analytical laboratory by an overnight delivery service.

Table H-3 QC Sample Requirements

Sample Type	Frequency	Purpose	Method
Field Duplicate	10%	To ensure that sampling procedures are reproducible and that the sample is representative of the location.	Collect twice the normally required sample volume. Split the sample into two aliquots. Treat each portion as if it were a separate sample and submit for analysis.
Matrix Spike/ Matrix Spike Duplicate (MS/MSD)	One pair per 20 samples; or minimum one per sampling event	Assess the efficiency of extraction, accuracy of the analysis, and possible matrix effects. The MSD assesses the precision at known concentrations.	Collect twice the normally required sample volume and specify MS/MSD analysis at laboratory.

1 Standard rounding conventions will used. For example, 10% of 14 samples equals 1 field duplicate; 10% of 15 samples equals 2 field duplicates, etc. A minimum of one field duplicate, and one MS/MSD sample will be collected per sampling event.

2 Location will be selected from one of the two strata. A different location and strata will be selected for each sampling event.

3 Analytical methods, sample container requirements, and holding times are listed in Table H-4.

Table H-4 Summary of Sample Container, Preservative, and Holding Time Requirements for Soil Samples

SW-846 Method	Analyte	Container	Preservative	Holding Time
6010	Metals (As, Sb, Ba, Be, Cd, Cr, Cu, Pb, Ni, Ag, Se)	500-mL wide-mouthed glass or plastic jar.	None, cool, 4°C	6 months for digestion and analysis except for mercury, which must be digested and analyzed in 28 days.
7471	Mercury	500-mL wide-mouthed glass or plastic jar.	None, cool, 4°C	6 months for digestion and analysis except for mercury, which must be digested and analyzed in 28 days.
8330	Explosive Residues			

H.4.3.8 Documentation of Sampling and Analysis Activities

Sample Identification

Sample containers will be uniquely identified to indicate the site, the sample type (composite or grab), the individual sample's location, the treatment unit, and date. Examples of a sample code for the three sampling zones are listed below:

- 20K-AO1-010506 (20,000-Pound OD Unit sample number 01 taken within Stratum A on January 5, 2006); and

- 20K-BOl-010506 (Sample number 01 from Stratum B of the OD Unit taken on January 5, 2006).

Sample locations will be recorded using global positioning system (GPS) so that the exact location can be identified, if necessary, at a later date. This information will be recorded in the field sampling log book.

Sample Labels

The samples collected will be identified by an adhesive label containing the following information:

- Collector's initials;
- Sample ID;
- Analytical methods requested;
- Place of collection (facility and location);
- Date sample taken; and
- Time sample taken

Any other information required by the laboratory or deemed necessary by project personnel will also be added to the label.

H.4.3.9 Field Sampling and Unit Operation Logbooks

All the methodology, procedures, and events pertaining to sample and data acquisition will be recorded in bound, water-resistant field logbooks with a black or blue waterproof ink pen. The logbooks will be considered formal documents representing a complete and organized record of all field activities. The entries will include, but are not limited to the following:

- Personnel present;
- Name of sampler(s);
- Date and time of every recording;
- Work location;
- Description of work and treatment process;
- Purpose of sampling;
- Soil sample descriptions;
- Description and location of area sampled;
- Sample numbers;
- Field QC data;
- Other important notes on field activities, conditions, or problems; and
- Initials/signature of person entering data.

Entries made in the logbook should be of sufficient detail to enable a third party to reconstruct the sampling event and sample location by reading the entries and information recorded in the logbook. No erasures or deletion marks will be permitted. If a mistake is made in a logbook, it

must be corrected by marking a line through the error and initialing. The correction may be made in the space available on the page.

H.4.4 LABORATORY ANALYSIS

Laboratory Specifications

Design and execution of the testing program will be coordinated with an analytical chemist experienced in contaminated soil testing. The laboratory procedures and QA/QC specifications will follow those described above. The following is a summary of these laboratory specifications and procedures.

At a minimum, the laboratory report will state the following:

- Unique laboratory ID;
- Field sample ID;
- Sampling date;
- Preparation date;
- Analysis date;
- Preparation batch;
- Preparation method;
- Analysis batch;
- Analysis method;
- Analyte;
- Results;
- Footnotes;
- Units;
- Sample matrix;
- Sample-specific detection limit;
- Dilution factor;
- Matrix spike recoveries;
- Surrogate spike recoveries (for all samples, blanks, and laboratory QC samples);
- Case narrative (if necessary);
- Dry weight;
- Blank sample results; and
- Laboratory control sample results.

The laboratory will be required to achieve the required detection limits as specified in SW-846. Equivalent analytical methods may be used following approval by NMED.

Soil samples will also be analyzed for soil moisture content in accordance with EPA SW-846. The contracted laboratory will report uncensored data for all analytical results. Regardless of the analytical measurement result, it will be reported without qualitative descriptors such as "not detected," "less than," or others.

Chemical Analyses and Rationale

This section summarizes the analytical procedures that will be followed for site-specific characterization of background constituent concentrations. As indicated in Permit Attachment B, Waste Analysis Plan, the only constituents of concern based on the wastes treated at the OD Unit are explosives and metals. Therefore, soil samples will be analyzed for toxic metals, including priority pollutant metals (listed in the New Mexico Hazardous Waste Management Regulations 20.4.1.500 NMAC Part 264 Appendix IX), explosive residues, and soil moisture. Table H-2 lists all analytes that will be measured along with their EPA SW-846 test methods.

H.4.4.1 Quality Control Samples for Annual Post-Detonation Soil Sampling

This section addresses requirements for field QC samples. Quality control in the field begins with adherence to the specified sampling protocols, but is monitored by a variety of samples taken with sufficient frequency to test the quality of measurement results. To measure field-related components of quality (i.e., versus laboratory components), duplicates and matrix spike/matrix spike duplicate (MS/MSD) pairs will be collected. Table H-3 explains the field QC requirements and procedures. Because no potential volatile or semi-volatile constituents are present, trip blanks and field blanks would not yield useful QC data and will not be collected.

H.4.4.2 QA/QC Protocols

For all inorganic tests, the samples will be spiked with known quantities of the hazardous constituent, and spike concentration and percent recovery will be reported. For organic tests, the samples will be spiked with a subset of target analytes. The surrogate spike recoveries will be reported for all organic tests. Results from method blanks on the samples will be submitted. Blank results will not be subtracted. The method of how the reported lower detectable limit was determined must also be reported. To ensure that the established data quality objectives (DQOs) can be attained, the level of analytical quality achieved will be at least Level III. Data will be sufficiently documented to allow personnel to review and evaluate data quality and have all reporting requirements to achieve Level III data quality. Level III data will allow HAFB to determine whether, based on the results, the OD treatment process is affecting the environment.

As a quality assurance measure, the contracted laboratory will also be required to participate in the U.S. EPA Water Pollution and Water Supply studies that include blinded performance evaluation samples.

H.4.4.3 Sample Return or Disposal

Unless directed otherwise by HAFB, the laboratory will dispose of all soil samples following analysis. The laboratory will provide certification that its facilities qualify for the exemption in 20.4.1.200 NMAC §261.4(d), which excludes waste samples from many hazardous waste management requirements. In addition, all laboratories will provide HAFB with an explanation of the disposal practices used with respect to sample residuals.

H.4.5 CLOSURE SAMPLING

In the event that the OD Unit is closed, a final round of sampling will be completed. This round of sampling will be conducted after the last detonation event, prior to any site work (grading, construction, landscaping, etc.).

A 200-foot by 200-foot area centered on the depression caused by the most recent detonation event will be divided into grids for sampling. The area will be divided into 100-foot by 100-foot grids, and each of the 100-foot grids subdivided into 50-foot by 50-foot grids. A total of 16 grids (50 by 50 feet) will be established and one random surface soil sample collected from each grid. A total of 17 soil samples that includes one sample per grid and one sample from the most recent depression (at the center of the 200-foot by 200-foot grid) will be collected and submitted for the explosive residues and metals listed in Table H-2.

QA/QC procedures, documentation requirements, laboratory protocols, and all other requirements applicable to operations sampling will be followed for the closure sampling.

Because the Closure Plan contained in Permit Attachment G may be modified or amended during the operational life of the OD Unit, the closure sampling protocols in this section will be modified, as necessary, in conjunction with changes made to the Closure Plan presented in Permit Attachment G.

H.4.5 DATA EVALUATION METHODS

To determine if operations at the HAFB 20,000-Pound OD Unit are adversely affecting the soil at the subject site, the sampling results will be compared with site-specific action levels. If constituent concentrations in the strata exceed action levels, further evaluation will be triggered. The following sections explain the action level determination, describe the comparison process, and list the potential remedial responses in the event of an exceedence of action levels.

H.4.5.1 Action Level Determination

The action levels for the potential contaminants at the OD Unit are derived from two sources: (1) Established site-specific background concentrations; and (2) NMED SSLs. In the event the SSLs are exceeded, risk-based values will be calculated in accordance with the most current NMED/EPA guidance and toxicity data.

H.4.5.2 Comparison of Sampling Results to Decision Criteria

All valid analytical data from sampling activities will be compared with the action levels to determine if a significant release of the targeted explosive and metal compounds has occurred. Analytical results will first be compared with background levels and if an exceedence occurs, the concentration will then be compared with the NMED SSLs.

Sampling results will be evaluated against actions levels after the analysis has been performed and the data have undergone QA/QC evaluation (typically 30 to 60 days from the time of sampling).

H.4.5.3 Data Resolution and Remedial Response

In the event that soil sampling results show that an action level has been exceeded at any sampling point, the sampling point will be immediately resampled to confirm the presence of contamination. If resampling confirms constituent concentrations in excess of the action level, the occurrence will be noted, NMED will be duly notified in writing, and a report describing the occurrence will be submitted to NMED within seven days of the sample confirmation.

For areas where contamination has been verified to exceed action levels, HAFB, in accordance with NMED regulations, may choose to further evaluate the exceedence using a site-specific risk-based approach, additional sampling results, or remediate affected soils. To prevent future contamination, the HAFB OD Unit operations will be reevaluated and modified, as appropriate.

Each of these potential solutions will require coordination with NMED and will be completed in a timely manner to help minimize the potential spread of contamination and risk to human health and the environment.

H.5 REFERENCES

Cochran, William G., 1977. *Sampling Techniques.* Pages 89-149.

EPA 1993. *Guidance for Planning for Data Collection in Support of Environmental Decision Making Using the Data Quality Objectives Process, EPA QA/G-4.* U.S. EPA, October 1993.

Mendenhall, William, et al., 1971. *Elementary Survey Sampling*. Pages. 53-64.

Radian 1995. *Draft Closure Plan, 300-lb Open Burn Area.* Radian Corporation. April, 1995.

SW-846. *Test Methods for Evaluating Solid Waste, SW-846, 3rd Edition,* U.S. EPA, November 1986. Office of Solid Waste and Emergency Response, Washington, D.C.

EXHIBIT H-1

HISTORICAL SOIL SAMPLING RESULTS

20,000-Pound Open Detonation Unit

Holloman Air Force Base

Exhibit H-1 (Table 1)
Analytical Sample Results

Location	Parameter		Value	Flags	Units	20,000 UTL[1]	NMED SSL[2]	>UTL?	>SSL?	Evaluation
OD-SO-A-01	Nitroglycerine	<	3,200.0000	U	µg/kg	93.6772	347000	YES	NO	No Action: result flagged "U"
OD-SO-A-02	Nitroglycerine	<	3,200.0000	U	µg/kg	93.6772	347000	YES	NO	No Action: result flagged "U"
OD-SO-A-03	Chromium		14.6000	B	mg/kg	9.5027	234	YES	NO	No Action: result flagged "B"
OD-SO-A-03	Nickel		7.6000	B	mg/kg	6.5898	1560	YES	NO	No Action: result flagged "B"
OD-SO-A-03	Nitroglycerine		6,300.0000		µg/kg	93.6772	347000	YES	NO	No Action:UTL exceeded but not SSL
OD-SO-A-04	Nitroglycerine	<	3,200.0000	U	µg/kg	93.6772	347000	YES	NO	No Action: result flagged "U"
OD-SO-B-01	Antimony		17.1000		mg/kg	3.5279	31.3	YES	NO	No Action:UTL exceeded but not SSL
OD-SO-B-01	Cadmium		0.7300		mg/kg	0.5417	74.1	YES	NO	No Action:UTL exceeded but not SSL
OD-SO-B-01	Chromium		34.3000	B	mg/kg	9.5027	234	YES	NO	No Action: result flagged "B"
OD-SO-B-01	Copper		137.0000	B	mg/kg	9.1595	3130	YES	NO	No Action: result flagged "B"
OD-SO-B-01	Lead		11.0000	B	mg/kg	7.6508	400	YES	NO	No Action: result flagged "B"
OD-SO-B-01	Nitroglycerine		11,000.0000		µg/kg	93.6772	347000	YES	NO	No Action:UTL exceeded but not SSL
OD-SO-B-02	Nitroglycerine	<	3,100.0000	U	µg/kg	93.6772	347000	YES	NO	No Action: result flagged "U"
OD-SO-B-03	Cadmium		1.4000		mg/kg	0.5417	74.1	YES	NO	No Action:UTL exceeded but not SSL
OD-SO-B-03	Lead		7.9000	B	mg/kg	7.6508	400	YES	NO	No Action: result flagged "B"
OD-SO-B-03	Nitroglycerine	<	3,100.0000	U	µg/kg	93.6772	347000	YES	NO	No Action: result flagged "U"
OD-SO-B-03A	Cadmium		1.2000		mg/kg	0.5417	74.1	YES	NO	No Action:UTL exceeded but not SSL
OD-SO-B-03A	Copper		10.8000	B	mg/kg	9.1595	3130	YES	NO	No Action: result flagged "B"
OD-SO-B-03A	Lead		10.7000	B	mg/kg	7.6508	400	YES	NO	No Action: result flagged "B"
OD-SO-B-03A	Nitroglycerine	<	3,200.0000	U	µg/kg	93.6772	347000	YES	NO	No Action: result flagged "U"
OD-SO-B-04	Nitroglycerine	<	2,700.0000	U	µg/kg	93.6772	347000	YES	NO	No Action: result flagged "U"
OD-SO-C-01	Arsenic		3.0000		mg/kg	1.4963	3.9	YES	NO	No Action:UTL exceeded but not SSL
OD-SO-C-01	Barium		90.8000	B	mg/kg	79.4971	5450	YES	NO	No Action: result flagged "B"
OD-SO-C-01	Beryllium		0.5100		mg/kg	0.42	156	YES	NO	No Action:UTL exceeded but not SSL
OD-SO-C-01	Chromium		11.9000	B	mg/kg	9.5027	234	YES	NO	No Action: result flagged "B"
OD-SO-C-01	Copper		14.6000	B	mg/kg	9.1595	3130	YES	NO	No Action: result flagged "B"
OD-SO-C-01	Lead		12.2000	B	mg/kg	7.6508	400	YES	NO	No Action: result flagged "B"
OD-SO-C-01	Nickel		8.1000	B	mg/kg	6.5898	1560	YES	NO	No Action: result flagged "B"
OD-SO-C-01	Nitroglycerine	<	3,000.0000	U	µg/kg	93.6772	347000	YES	NO	No Action: result flagged "U"
OD-SO-C-02	Nitroglycerine	<	2,900.0000	U	µg/kg	93.6772	347000	YES	NO	No Action: result flagged "U"
OD-SO-C-03	Cadmium		1.1000		mg/kg	0.5417	74.1	YES	NO	No Action:UTL exceeded but not SSL
OD-SO-C-03	Nitroglycerine	<	2,800.0000	U	µg/kg	93.6772	347000	YES	NO	No Action: result flagged "U"
OD-SO-C-04	Arsenic		2.1000		mg/kg	1.4963	3.9	YES	NO	No Action:UTL exceeded but not SSL
OD-SO-C-04	Barium		79.7000	B	mg/kg	79.4971	5450	YES	NO	No Action: result flagged "B"
OD-SO-C-04	Cadmium		0.7300		mg/kg	0.5417	74.1	YES	NO	No Action:UTL exceeded but not SSL
OD-SO-C-04	Chromium		10.3000	B	mg/kg	9.5027	234	YES	NO	No Action: result flagged "B"
OD-SO-C-04	Copper		16.3000	B	mg/kg	9.1595	3130	YES	NO	No Action: result flagged "B"
OD-SO-C-04	Lead		14.5000	B	mg/kg	7.6508	400	YES	NO	No Action: result flagged "B"
OD-SO-C-04	Nickel		7.2000	B	mg/kg	6.5898	1560	YES	NO	No Action: result flagged "B"
OD-SO-C-04	Nitroglycerine	<	3,100.0000	U	µg/kg	93.6772	347000	YES	NO	No Action: result flagged "U"
OD-SO-A-01	Antimony		0.3600		mg/kg	3.5279	31.3	NO	NO	No Action: No standard exceeded
OD-SO-A-01	Arsenic		1.2000		mg/kg	1.4963	3.9	NO	NO	No Action: No standard exceeded
OD-SO-A-01	Barium		34.6000	B	mg/kg	79.4971	5450	NO	NO	No Action: No standard exceeded

Exhibit H-1 (Table 1)
Analytical Sample Results

Location	Parameter		Value	Flags	Units	20,000 UTL[1]	NMED SSL[2]	>UTL?	>SSL?	Evaluation
OD-SO-A-01	Beryllium		0.0610		mg/kg	0.42	156	NO	NO	No Action: No standard exceeded
OD-SO-A-01	Cadmium		0.5000		mg/kg	0.5417	74.1	NO	NO	No Action: No standard exceeded
OD-SO-A-01	Chromium		3.3000	B	mg/kg	9.5027	234	NO	NO	No Action: No standard exceeded
OD-SO-A-01	Copper		3.9000	B	mg/kg	9.1595	3130	NO	NO	No Action: No standard exceeded
OD-SO-A-01	Lead		2.9000	B	mg/kg	7.6508	400	NO	NO	No Action: No standard exceeded
OD-SO-A-01	Nickel		2.1000	B	mg/kg	6.5898	1560	NO	NO	No Action: No standard exceeded
OD-SO-A-01	Selenium	<	0.3000	U	mg/kg	2.2645	391	NO	NO	No Action: No standard exceeded
OD-SO-A-01	Silver	<	0.0530	U	mg/kg	0.7328	391	NO	NO	No Action: No standard exceeded
OD-SO-A-01	Mercury	<	0.0200	U	mg/kg	0.0269	6.11	NO	NO	No Action: No standard exceeded
OD-SO-A-01	1,3,5-Trinitrobenzene	<	29.0000	U	µg/kg	NA	NA	NO	NO	No Action: No standard exceeded
OD-SO-A-01	1,3-Dinitrobenzene	<	12.0000	U	µg/kg	NA	NA	NO	NO	No Action: No standard exceeded
OD-SO-A-01	2-Amino-4,6-Dinitrotoluene	<	19.0000	U	µg/kg	NA	NA	NO	NO	No Action: No standard exceeded
OD-SO-A-01	4-Amino-2,6-Dinitrotoluene	<	36.0000	U	µg/kg	NA	NA	NO	NO	No Action: No standard exceeded
OD-SO-A-01	2,4-Dinitrotoluene	<	24.0000	U	µg/kg	NA	120000	NO	NO	No Action: No standard exceeded
OD-SO-A-01	2,6-Dinitrotoluene	<	26.0000	U	µg/kg	NA	NA	NO	NO	No Action: No standard exceeded
OD-SO-A-01	HMX		1,000.0000		µg/kg	NA	3000000	NO	NO	No Action: No standard exceeded
OD-SO-A-01	m-Nitrotoluene	<	25.0000	U	µg/kg	NA	410000	NO	NO	No Action: No standard exceeded
OD-SO-A-01	Nitrobenzene	<	10.0000	U	µg/kg	NA	21800	NO	NO	No Action: No standard exceeded
OD-SO-A-01	o-Nitrotoluene	<	20.0000	U	µg/kg	NA	410000	NO	NO	No Action: No standard exceeded
OD-SO-A-01	Pentaerythritol Tetranitrate	<	210.0000	U	µg/kg	61300	NA	NO	NO	No Action: No standard exceeded
OD-SO-A-01	p-Nitrotoluene	<	48.0000	U	µg/kg	NA	410000	NO	NO	No Action: No standard exceeded
OD-SO-A-01	RDX		1,300.0000		µg/kg	NA	4420	NO	NO	No Action: No standard exceeded
OD-SO-A-01	Tetryl	<	26.0000	U	µg/kg	NA	NA	NO	NO	No Action: No standard exceeded
OD-SO-A-01	2,4,6-Trinitrotoluene (TNT)	<	18.0000	U	µg/kg	NA	30000	NO	NO	No Action: No standard exceeded
OD-SO-A-02	Antimony		0.4600		mg/kg	3.5279	31.3	NO	NO	No Action: No standard exceeded
OD-SO-A-02	Arsenic		1.1000		mg/kg	1.4963	3.9	NO	NO	No Action: No standard exceeded
OD-SO-A-02	Barium		27.5000	B	mg/kg	79.4971	5450	NO	NO	No Action: No standard exceeded
OD-SO-A-02	Beryllium		0.0250		mg/kg	0.42	156	NO	NO	No Action: No standard exceeded
OD-SO-A-02	Cadmium		0.0990		mg/kg	0.5417	74.1	NO	NO	No Action: No standard exceeded
OD-SO-A-02	Chromium		2.5000	B	mg/kg	9.5027	234	NO	NO	No Action: No standard exceeded
OD-SO-A-02	Copper		2.2000	B	mg/kg	9.1595	3130	NO	NO	No Action: No standard exceeded
OD-SO-A-02	Lead		2.7000	B	mg/kg	7.6508	400	NO	NO	No Action: No standard exceeded
OD-SO-A-02	Nickel		1.4000	B	mg/kg	6.5898	1560	NO	NO	No Action: No standard exceeded
OD-SO-A-02	Selenium	<	0.2600	U	mg/kg	2.2645	391	NO	NO	No Action: No standard exceeded
OD-SO-A-02	Silver	<	0.0470	U	mg/kg	0.7328	391	NO	NO	No Action: No standard exceeded
OD-SO-A-02	Mercury	<	0.0190	U	mg/kg	0.0269	6.11	NO	NO	No Action: No standard exceeded
OD-SO-A-02	1,3,5-Trinitrobenzene	<	29.0000	U	µg/kg	NA	NA	NO	NO	No Action: No standard exceeded
OD-SO-A-02	1,3-Dinitrobenzene	<	12.0000	U	µg/kg	NA	NA	NO	NO	No Action: No standard exceeded
OD-SO-A-02	2-Amino-4,6-Dinitrotoluene	<	19.0000	U	µg/kg	NA	NA	NO	NO	No Action: No standard exceeded
OD-SO-A-02	4-Amino-2,6-Dinitrotoluene	<	36.0000	U	µg/kg	NA	NA	NO	NO	No Action: No standard exceeded
OD-SO-A-02	2,4-Dinitrotoluene	<	24.0000	U	µg/kg	NA	120000	NO	NO	No Action: No standard exceeded
OD-SO-A-02	2,6-Dinitrotoluene	<	26.0000	U	µg/kg	NA	NA	NO	NO	No Action: No standard exceeded
OD-SO-A-02	HMX	<	18.0000	U	µg/kg	NA	3000000	NO	NO	No Action: No standard exceeded

Exhibit H-1 (Table 1)
Analytical Sample Results

Location	Parameter		Value	Flags	Units	20,000 UTL[1]	NMED SSL[2]	>UTL?	>SSL?	Evaluation
OD-SO-A-02	m-Nitrotoluene	<	25.0000	U	µg/kg	NA	410000	NO	NO	No Action: No standard exceeded
OD-SO-A-02	Nitrobenzene		65.0000		µg/kg	NA	21800	NO	NO	No Action: No standard exceeded
OD-SO-A-02	o-Nitrotoluene	<	20.0000	U	µg/kg	NA	410000	NO	NO	No Action: No standard exceeded
OD-SO-A-02	Pentaerythritol Tetranitrate	<	210.0000	U	µg/kg	61300	NA	NO	NO	No Action: No standard exceeded
OD-SO-A-02	p-Nitrotoluene	<	48.0000	U	µg/kg	NA	410000	NO	NO	No Action: No standard exceeded
OD-SO-A-02	RDX	<	79.0000	U	µg/kg	NA	4420	NO	NO	No Action: No standard exceeded
OD-SO-A-02	Tetryl	<	26.0000	U	µg/kg	NA	NA	NO	NO	No Action: No standard exceeded
OD-SO-A-02	2,4,6-Trinitrotoluene (TNT)	<	18.0000	U	µg/kg	NA	30000	NO	NO	No Action: No standard exceeded
OD-SO-A-03	Antimony		0.5600		mg/kg	3.5279	31.3	NO	NO	No Action: No standard exceeded
OD-SO-A-03	Arsenic		1.2000		mg/kg	1.4963	3.9	NO	NO	No Action: No standard exceeded
OD-SO-A-03	Barium		29.6000	B	mg/kg	79.4971	5450	NO	NO	No Action: No standard exceeded
OD-SO-A-03	Beryllium		0.0350		mg/kg	0.42	156	NO	NO	No Action: No standard exceeded
OD-SO-A-03	Cadmium		0.3400		mg/kg	0.5417	74.1	NO	NO	No Action: No standard exceeded
OD-SO-A-03	Copper		3.4000	B	mg/kg	9.1595	3130	NO	NO	No Action: No standard exceeded
OD-SO-A-03	Lead		3.7000	B	mg/kg	7.6508	400	NO	NO	No Action: No standard exceeded
OD-SO-A-03	Selenium	<	0.2700	U	mg/kg	2.2645	391	NO	NO	No Action: No standard exceeded
OD-SO-A-03	Silver	<	0.0480	U	mg/kg	0.7328	391	NO	NO	No Action: No standard exceeded
OD-SO-A-03	Mercury	<	0.0200	U	mg/kg	0.0269	6.11	NO	NO	No Action: No standard exceeded
OD-SO-A-03	1,3,5-Trinitrobenzene	<	29.0000	U	µg/kg	NA	NA	NO	NO	No Action: No standard exceeded
OD-SO-A-03	1,3-Dinitrobenzene	<	12.0000	U	µg/kg	NA	NA	NO	NO	No Action: No standard exceeded
OD-SO-A-03	2-Amino-4,6-Dinitrotoluene	<	19.0000	U	µg/kg	NA	NA	NO	NO	No Action: No standard exceeded
OD-SO-A-03	4-Amino-2,6-Dinitrotoluene	<	36.0000	U	µg/kg	NA	NA	NO	NO	No Action: No standard exceeded
OD-SO-A-03	2,4-Dinitrotoluene	<	24.0000	U	µg/kg	NA	120000	NO	NO	No Action: No standard exceeded
OD-SO-A-03	2,6-Dinitrotoluene	<	26.0000	U	µg/kg	NA	NA	NO	NO	No Action: No standard exceeded
OD-SO-A-03	HMX	<	18.0000	U	µg/kg	NA	3000000	NO	NO	No Action: No standard exceeded
OD-SO-A-03	m-Nitrotoluene	<	25.0000	U	µg/kg	NA	410000	NO	NO	No Action: No standard exceeded
OD-SO-A-03	Nitrobenzene		73.0000		µg/kg	NA	21800	NO	NO	No Action: No standard exceeded
OD-SO-A-03	o-Nitrotoluene	<	20.0000	U	µg/kg	NA	410000	NO	NO	No Action: No standard exceeded
OD-SO-A-03	Pentaerythritol Tetranitrate	<	210.0000	U	µg/kg	61300	NA	NO	NO	No Action: No standard exceeded
OD-SO-A-03	p-Nitrotoluene	<	48.0000	U	µg/kg	NA	410000	NO	NO	No Action: No standard exceeded
OD-SO-A-03	RDX	<	79.0000	U	µg/kg	NA	4420	NO	NO	No Action: No standard exceeded
OD-SO-A-03	Tetryl	<	26.0000	U	µg/kg	NA	NA	NO	NO	No Action: No standard exceeded
OD-SO-A-03	2,4,6-Trinitrotoluene (TNT)	<	18.0000	U	µg/kg	NA	30000	NO	NO	No Action: No standard exceeded
OD-SO-A-04	Antimony		0.5500		mg/kg	3.5279	31.3	NO	NO	No Action: No standard exceeded
OD-SO-A-04	Arsenic		1.2000		mg/kg	1.4963	3.9	NO	NO	No Action: No standard exceeded
OD-SO-A-04	Barium		35.4000	B	mg/kg	79.4971	5450	NO	NO	No Action: No standard exceeded
OD-SO-A-04	Beryllium		0.0690		mg/kg	0.42	156	NO	NO	No Action: No standard exceeded
OD-SO-A-04	Cadmium		0.3200		mg/kg	0.5417	74.1	NO	NO	No Action: No standard exceeded
OD-SO-A-04	Chromium		3.6000	B	mg/kg	9.5027	234	NO	NO	No Action: No standard exceeded
OD-SO-A-04	Copper		3.7000	B	mg/kg	9.1595	3130	NO	NO	No Action: No standard exceeded
OD-SO-A-04	Lead		3.0000	B	mg/kg	7.6508	400	NO	NO	No Action: No standard exceeded
OD-SO-A-04	Nickel		2.0000	B	mg/kg	6.5898	1560	NO	NO	No Action: No standard exceeded
OD-SO-A-04	Selenium	<	0.2900	U	mg/kg	2.2645	391	NO	NO	No Action: No standard exceeded

Exhibit H-1 (Table 1)
Analytical Sample Results

Location	Parameter		Value	Flags	Units	20,000 UTL[1]	NMED SSL[2]	>UTL?	>SSL?	Evaluation
OD-SO-A-04	Silver	<	0.0520	U	mg/kg	0.7328	391	NO	NO	No Action: No standard exceeded
OD-SO-A-04	Mercury	<	0.0180	U	mg/kg	0.0269	6.11	NO	NO	No Action: No standard exceeded
OD-SO-A-04	1,3,5-Trinitrobenzene	<	29.0000	U	µg/kg	NA	NA	NO	NO	No Action: No standard exceeded
OD-SO-A-04	1,3-Dinitrobenzene	<	12.0000	U	µg/kg	NA	NA	NO	NO	No Action: No standard exceeded
OD-SO-A-04	2-Amino-4,6-Dinitrotoluene	<	19.0000	U	µg/kg	NA	NA	NO	NO	No Action: No standard exceeded
OD-SO-A-04	4-Amino-2,6-Dinitrotoluene	<	36.0000	U	µg/kg	NA	NA	NO	NO	No Action: No standard exceeded
OD-SO-A-04	2,4-Dinitrotoluene	<	24.0000	U	µg/kg	NA	120000	NO	NO	No Action: No standard exceeded
OD-SO-A-04	2,6-Dinitrotoluene	<	26.0000	U	µg/kg	NA	NA	NO	NO	No Action: No standard exceeded
OD-SO-A-04	HMX	<	18.0000	U	µg/kg	NA	3000000	NO	NO	No Action: No standard exceeded
OD-SO-A-04	m-Nitrotoluene	<	25.0000	U	µg/kg	NA	410000	NO	NO	No Action: No standard exceeded
OD-SO-A-04	Nitrobenzene	<	10.0000	U	µg/kg	NA	21800	NO	NO	No Action: No standard exceeded
OD-SO-A-04	o-Nitrotoluene	<	20.0000	U	µg/kg	NA	410000	NO	NO	No Action: No standard exceeded
OD-SO-A-04	Pentaerythritol Tetranitrate	<	210.0000	U	µg/kg	61300	NA	NO	NO	No Action: No standard exceeded
OD-SO-A-04	p-Nitrotoluene	<	48.0000	U	µg/kg	NA	410000	NO	NO	No Action: No standard exceeded
OD-SO-A-04	RDX	<	79.0000	U	µg/kg	NA	4420	NO	NO	No Action: No standard exceeded
OD-SO-A-04	Tetryl	<	26.0000	U	µg/kg	NA	NA	NO	NO	No Action: No standard exceeded
OD-SO-A-04	2,4,6-Trinitrotoluene (TNT)	<	18.0000	U	µg/kg	NA	30000	NO	NO	No Action: No standard exceeded
OD-SO-B-01	Arsenic		1.1000		mg/kg	1.4963	3.9	NO	NO	No Action: No standard exceeded
OD-SO-B-01	Barium		35.5000	B	mg/kg	79.4971	5450	NO	NO	No Action: No standard exceeded
OD-SO-B-01	Beryllium		0.0590		mg/kg	0.42	156	NO	NO	No Action: No standard exceeded
OD-SO-B-01	Nickel		2.4000	B	mg/kg	6.5898	1560	NO	NO	No Action: No standard exceeded
OD-SO-B-01	Selenium	<	0.2900	U	mg/kg	2.2645	391	NO	NO	No Action: No standard exceeded
OD-SO-B-01	Silver		0.0510		mg/kg	0.7328	391	NO	NO	No Action: No standard exceeded
OD-SO-B-01	Mercury	<	0.0210	U	mg/kg	0.0269	6.11	NO	NO	No Action: No standard exceeded
OD-SO-B-01	1,3,5-Trinitrobenzene	<	29.0000	U	µg/kg	NA	NA	NO	NO	No Action: No standard exceeded
OD-SO-B-01	1,3-Dinitrobenzene	<	12.0000	U	µg/kg	NA	NA	NO	NO	No Action: No standard exceeded
OD-SO-B-01	2-Amino-4,6-Dinitrotoluene	<	19.0000	U	µg/kg	NA	NA	NO	NO	No Action: No standard exceeded
OD-SO-B-01	4-Amino-2,6-Dinitrotoluene	<	36.0000	U	µg/kg	NA	NA	NO	NO	No Action: No standard exceeded
OD-SO-B-01	2,4-Dinitrotoluene	<	24.0000	U	µg/kg	NA	120000	NO	NO	No Action: No standard exceeded
OD-SO-B-01	2,6-Dinitrotoluene	<	26.0000	U	µg/kg	NA	NA	NO	NO	No Action: No standard exceeded
OD-SO-B-01	HMX	<	18.0000	U	µg/kg	NA	3000000	NO	NO	No Action: No standard exceeded
OD-SO-B-01	m-Nitrotoluene	<	25.0000	U	µg/kg	NA	410000	NO	NO	No Action: No standard exceeded
OD-SO-B-01	Nitrobenzene		460.0000		µg/kg	NA	21800	NO	NO	No Action: No standard exceeded
OD-SO-B-01	o-Nitrotoluene	<	20.0000	U	µg/kg	NA	410000	NO	NO	No Action: No standard exceeded
OD-SO-B-01	Pentaerythritol Tetranitrate	<	210.0000	U	µg/kg	61300	NA	NO	NO	No Action: No standard exceeded
OD-SO-B-01	p-Nitrotoluene	<	48.0000	U	µg/kg	NA	410000	NO	NO	No Action: No standard exceeded
OD-SO-B-01	RDX	<	79.0000	U	µg/kg	NA	4420	NO	NO	No Action: No standard exceeded
OD-SO-B-01	Tetryl	<	26.0000	U	µg/kg	NA	NA	NO	NO	No Action: No standard exceeded
OD-SO-B-01	2,4,6-Trinitrotoluene (TNT)	<	18.0000	U	µg/kg	NA	30000	NO	NO	No Action: No standard exceeded
OD-SO-B-02	Antimony		0.4800		mg/kg	3.5279	31.3	NO	NO	No Action: No standard exceeded
OD-SO-B-02	Arsenic		0.4900		mg/kg	1.4963	3.9	NO	NO	No Action: No standard exceeded
OD-SO-B-02	Barium		27.1000	B	mg/kg	79.4971	5450	NO	NO	No Action: No standard exceeded
OD-SO-B-02	Beryllium	<	0.0100	U	mg/kg	0.42	156	NO	NO	No Action: No standard exceeded

Exhibit H-1 (Table 1)
Analytical Sample Results

Location	Parameter		Value	Flags	Units	20,000 UTL[1]	NMED SSL[2]	>UTL?	>SSL?	Evaluation
OD-SO-B-02	Cadmium		0.0350		mg/kg	0.5417	74.1	NO	NO	No Action: No standard exceeded
OD-SO-B-02	Chromium		2.0000	B	mg/kg	9.5027	234	NO	NO	No Action: No standard exceeded
OD-SO-B-02	Copper		2.0000	B	mg/kg	9.1595	3130	NO	NO	No Action: No standard exceeded
OD-SO-B-02	Lead		1.6000	B	mg/kg	7.6508	400	NO	NO	No Action: No standard exceeded
OD-SO-B-02	Nickel		1.3000	B	mg/kg	6.5898	1560	NO	NO	No Action: No standard exceeded
OD-SO-B-02	Selenium	<	0.2900	U	mg/kg	2.2645	391	NO	NO	No Action: No standard exceeded
OD-SO-B-02	Silver	<	0.0520	U	mg/kg	0.7328	391	NO	NO	No Action: No standard exceeded
OD-SO-B-02	Mercury	<	0.0200	U	mg/kg	0.0269	6.11	NO	NO	No Action: No standard exceeded
OD-SO-B-02	1,3,5-Trinitrobenzene	<	29.0000	U	µg/kg	NA	NA	NO	NO	No Action: No standard exceeded
OD-SO-B-02	1,3-Dinitrobenzene	<	12.0000	U	µg/kg	NA	NA	NO	NO	No Action: No standard exceeded
OD-SO-B-02	2-Amino-4,6-Dinitrotoluene	<	19.0000	U	µg/kg	NA	NA	NO	NO	No Action: No standard exceeded
OD-SO-B-02	4-Amino-2,6-Dinitrotoluene	<	36.0000	U	µg/kg	NA	NA	NO	NO	No Action: No standard exceeded
OD-SO-B-02	2,4-Dinitrotoluene	<	24.0000	U	µg/kg	NA	120000	NO	NO	No Action: No standard exceeded
OD-SO-B-02	2,6-Dinitrotoluene	<	26.0000	U	µg/kg	NA	NA	NO	NO	No Action: No standard exceeded
OD-SO-B-02	HMX	<	18.0000	U	µg/kg	NA	3000000	NO	NO	No Action: No standard exceeded
OD-SO-B-02	m-Nitrotoluene	<	25.0000	U	µg/kg	NA	410000	NO	NO	No Action: No standard exceeded
OD-SO-B-02	Nitrobenzene	<	10.0000	U	µg/kg	NA	21800	NO	NO	No Action: No standard exceeded
OD-SO-B-02	o-Nitrotoluene	<	20.0000	U	µg/kg	NA	410000	NO	NO	No Action: No standard exceeded
OD-SO-B-02	Pentaerythritol Tetranitrate	<	210.0000	U	µg/kg	61300	NA	NO	NO	No Action: No standard exceeded
OD-SO-B-02	p-Nitrotoluene	<	48.0000	U	µg/kg	NA	410000	NO	NO	No Action: No standard exceeded
OD-SO-B-02	RDX		290.0000		µg/kg	NA	4420	NO	NO	No Action: No standard exceeded
OD-SO-B-02	Tetryl	<	26.0000	U	µg/kg	NA	NA	NO	NO	No Action: No standard exceeded
OD-SO-B-02	2,4,6-Trinitrotoluene (TNT)	<	18.0000	U	µg/kg	NA	30000	NO	NO	No Action: No standard exceeded
OD-SO-B-03	Antimony		0.4300		mg/kg	3.5279	31.3	NO	NO	No Action: No standard exceeded
OD-SO-B-03	Arsenic		1.4000		mg/kg	1.4963	3.9	NO	NO	No Action: No standard exceeded
OD-SO-B-03	Barium		37.1000	B	mg/kg	79.4971	5450	NO	NO	No Action: No standard exceeded
OD-SO-B-03	Beryllium		0.0810		mg/kg	0.42	156	NO	NO	No Action: No standard exceeded
OD-SO-B-03	Chromium		4.4000	B	mg/kg	9.5027	234	NO	NO	No Action: No standard exceeded
OD-SO-B-03	Copper		8.2000	B	mg/kg	9.1595	3130	NO	NO	No Action: No standard exceeded
OD-SO-B-03	Nickel		2.6000	B	mg/kg	6.5898	1560	NO	NO	No Action: No standard exceeded
OD-SO-B-03	Selenium	<	0.2900	U	mg/kg	2.2645	391	NO	NO	No Action: No standard exceeded
OD-SO-B-03	Silver		0.0840		mg/kg	0.7328	391	NO	NO	No Action: No standard exceeded
OD-SO-B-03	Mercury	<	0.0190	U	mg/kg	0.0269	6.11	NO	NO	No Action: No standard exceeded
OD-SO-B-03	1,3,5-Trinitrobenzene	<	29.0000	U	µg/kg	NA	NA	NO	NO	No Action: No standard exceeded
OD-SO-B-03	1,3-Dinitrobenzene	<	12.0000	U	µg/kg	NA	NA	NO	NO	No Action: No standard exceeded
OD-SO-B-03	2-Amino-4,6-Dinitrotoluene	<	19.0000	U	µg/kg	NA	NA	NO	NO	No Action: No standard exceeded
OD-SO-B-03	4-Amino-2,6-Dinitrotoluene	<	36.0000	U	µg/kg	NA	NA	NO	NO	No Action: No standard exceeded
OD-SO-B-03	2,4-Dinitrotoluene	<	24.0000	U	µg/kg	NA	120000	NO	NO	No Action: No standard exceeded
OD-SO-B-03	2,6-Dinitrotoluene	<	26.0000	U	µg/kg	NA	NA	NO	NO	No Action: No standard exceeded
OD-SO-B-03	HMX	<	18.0000	U	µg/kg	NA	3000000	NO	NO	No Action: No standard exceeded
OD-SO-B-03	m-Nitrotoluene	<	25.0000	U	µg/kg	NA	410000	NO	NO	No Action: No standard exceeded
OD-SO-B-03	Nitrobenzene		100.0000		µg/kg	NA	21800	NO	NO	No Action: No standard exceeded
OD-SO-B-03	o-Nitrotoluene	<	20.0000	U	µg/kg	NA	410000	NO	NO	No Action: No standard exceeded

Exhibit H-1 (Table 1)
Analytical Sample Results

Location	Parameter		Value	Flags	Units	20,000 UTL[1]	NMED SSL[2]	>UTL?	>SSL?	Evaluation
OD-SO-B-03	Pentaerythritol Tetranitrate	<	210.0000	U	µg/kg	61300	NA	NO	NO	No Action: No standard exceeded
OD-SO-B-03	p-Nitrotoluene	<	48.0000	U	µg/kg	NA	410000	NO	NO	No Action: No standard exceeded
OD-SO-B-03	RDX	<	79.0000	U	µg/kg	NA	4420	NO	NO	No Action: No standard exceeded
OD-SO-B-03	Tetryl	<	26.0000	U	µg/kg	NA	NA	NO	NO	No Action: No standard exceeded
OD-SO-B-03	2,4,6-Trinitrotoluene (TNT)	<	18.0000	U	µg/kg	NA	30000	NO	NO	No Action: No standard exceeded
OD-SO-B-03A	Antimony		0.5000		mg/kg	3.5279	31.3	NO	NO	No Action: No standard exceeded
OD-SO-B-03A	Arsenic		1.2000		mg/kg	1.4963	3.9	NO	NO	No Action: No standard exceeded
OD-SO-B-03A	Barium		39.4000	B	mg/kg	79.4971	5450	NO	NO	No Action: No standard exceeded
OD-SO-B-03A	Beryllium		0.0890		mg/kg	0.42	156	NO	NO	No Action: No standard exceeded
OD-SO-B-03A	Chromium		4.3000	B	mg/kg	9.5027	234	NO	NO	No Action: No standard exceeded
OD-SO-B-03A	Nickel		2.5000	B	mg/kg	6.5898	1560	NO	NO	No Action: No standard exceeded
OD-SO-B-03A	Selenium	<	0.2800	U	mg/kg	2.2645	391	NO	NO	No Action: No standard exceeded
OD-SO-B-03A	Silver	<	0.0510	U	mg/kg	0.7328	391	NO	NO	No Action: No standard exceeded
OD-SO-B-03A	Mercury	<	0.0200	U	mg/kg	0.0269	6.11	NO	NO	No Action: No standard exceeded
OD-SO-B-03A	1,3,5-Trinitrobenzene	<	29.0000	U	µg/kg	NA	NA	NO	NO	No Action: No standard exceeded
OD-SO-B-03A	1,3-Dinitrobenzene	<	12.0000	U	µg/kg	NA	NA	NO	NO	No Action: No standard exceeded
OD-SO-B-03A	2-Amino-4,6-Dinitrotoluene	<	19.0000	U	µg/kg	NA	NA	NO	NO	No Action: No standard exceeded
OD-SO-B-03A	4-Amino-2,6-Dinitrotoluene	<	36.0000	U	µg/kg	NA	NA	NO	NO	No Action: No standard exceeded
OD-SO-B-03A	2,4-Dinitrotoluene		100.0000		µg/kg	NA	120000	NO	NO	No Action: No standard exceeded
OD-SO-B-03A	2,6-Dinitrotoluene	<	26.0000	U	µg/kg	NA	NA	NO	NO	No Action: No standard exceeded
OD-SO-B-03A	HMX	<	18.0000	U	µg/kg	NA	3000000	NO	NO	No Action: No standard exceeded
OD-SO-B-03A	m-Nitrotoluene	<	25.0000	U	µg/kg	NA	410000	NO	NO	No Action: No standard exceeded
OD-SO-B-03A	Nitrobenzene		290.0000		µg/kg	NA	21800	NO	NO	No Action: No standard exceeded
OD-SO-B-03A	o-Nitrotoluene	<	20.0000	U	µg/kg	NA	410000	NO	NO	No Action: No standard exceeded
OD-SO-B-03A	Pentaerythritol Tetranitrate	<	210.0000	U	µg/kg	61300	NA	NO	NO	No Action: No standard exceeded
OD-SO-B-03A	p-Nitrotoluene	<	48.0000	U	µg/kg	NA	410000	NO	NO	No Action: No standard exceeded
OD-SO-B-03A	RDX	<	79.0000	U	µg/kg	NA	4420	NO	NO	No Action: No standard exceeded
OD-SO-B-03A	Tetryl	<	26.0000	U	µg/kg	NA	NA	NO	NO	No Action: No standard exceeded
OD-SO-B-03A	2,4,6-Trinitrotoluene (TNT)	<	18.0000	U	µg/kg	NA	30000	NO	NO	No Action: No standard exceeded
OD-SO-B-04	Antimony	<	0.2000	U	mg/kg	3.5279	31.3	NO	NO	No Action: No standard exceeded
OD-SO-B-04	Arsenic		0.6200		mg/kg	1.4963	3.9	NO	NO	No Action: No standard exceeded
OD-SO-B-04	Barium		25.4000	B	mg/kg	79.4971	5450	NO	NO	No Action: No standard exceeded
OD-SO-B-04	Beryllium		0.0270		mg/kg	0.42	156	NO	NO	No Action: No standard exceeded
OD-SO-B-04	Cadmium		0.0480		mg/kg	0.5417	74.1	NO	NO	No Action: No standard exceeded
OD-SO-B-04	Chromium		2.0000	B	mg/kg	9.5027	234	NO	NO	No Action: No standard exceeded
OD-SO-B-04	Copper		2.4000	B	mg/kg	9.1595	3130	NO	NO	No Action: No standard exceeded
OD-SO-B-04	Lead		1.9000	B	mg/kg	7.6508	400	NO	NO	No Action: No standard exceeded
OD-SO-B-04	Nickel		1.4000	B	mg/kg	6.5898	1560	NO	NO	No Action: No standard exceeded
OD-SO-B-04	Selenium	<	0.2400	U	mg/kg	2.2645	391	NO	NO	No Action: No standard exceeded
OD-SO-B-04	Silver	<	0.0430	U	mg/kg	0.7328	391	NO	NO	No Action: No standard exceeded
OD-SO-B-04	Mercury	<	0.0150	U	mg/kg	0.0269	6.11	NO	NO	No Action: No standard exceeded
OD-SO-B-04	1,3,5-Trinitrobenzene	<	29.0000	U	µg/kg	NA	NA	NO	NO	No Action: No standard exceeded
OD-SO-B-04	1,3-Dinitrobenzene	<	12.0000	U	µg/kg	NA	NA	NO	NO	No Action: No standard exceeded

Exhibit H-1 (Table 1)
Analytical Sample Results

Location	Parameter		Value	Flags	Units	20,000 UTL[1]	NMED SSL[2]	>UTL?	>SSL?	Evaluation
OD-SO-B-04	2-Amino-4,6-Dinitrotoluene	<	19.0000	U	µg/kg	NA	NA	NO	NO	No Action: No standard exceeded
OD-SO-B-04	4-Amino-2,6-Dinitrotoluene	<	36.0000	U	µg/kg	NA	NA	NO	NO	No Action: No standard exceeded
OD-SO-B-04	2,4-Dinitrotoluene	<	24.0000	U	µg/kg	NA	120000	NO	NO	No Action: No standard exceeded
OD-SO-B-04	2,6-Dinitrotoluene	<	26.0000	U	µg/kg	NA	NA	NO	NO	No Action: No standard exceeded
OD-SO-B-04	HMX	<	18.0000	U	µg/kg	NA	3000000	NO	NO	No Action: No standard exceeded
OD-SO-B-04	m-Nitrotoluene	<	25.0000	U	µg/kg	NA	410000	NO	NO	No Action: No standard exceeded
OD-SO-B-04	Nitrobenzene	<	10.0000	U	µg/kg	NA	21800	NO	NO	No Action: No standard exceeded
OD-SO-B-04	o-Nitrotoluene	<	20.0000	U	µg/kg	NA	410000	NO	NO	No Action: No standard exceeded
OD-SO-B-04	Pentaerythritol Tetranitrate	<	210.0000	U	µg/kg	61300	NA	NO	NO	No Action: No standard exceeded
OD-SO-B-04	p-Nitrotoluene	<	48.0000	U	µg/kg	NA	410000	NO	NO	No Action: No standard exceeded
OD-SO-B-04	RDX	<	79.0000	U	µg/kg	NA	4420	NO	NO	No Action: No standard exceeded
OD-SO-B-04	Tetryl	<	26.0000	U	µg/kg	NA	NA	NO	NO	No Action: No standard exceeded
OD-SO-B-04	2,4,6-Trinitrotoluene (TNT)	<	18.0000	U	µg/kg	NA	30000	NO	NO	No Action: No standard exceeded
OD-SO-C-01	Antimony		0.5200		mg/kg	3.5279	31.3	NO	NO	No Action: No standard exceeded
OD-SO-C-01	Cadmium		0.3500		mg/kg	0.5417	74.1	NO	NO	No Action: No standard exceeded
OD-SO-C-01	Selenium	<	0.2500	U	mg/kg	2.2645	391	NO	NO	No Action: No standard exceeded
OD-SO-C-01	Silver	<	0.0440	U	mg/kg	0.7328	391	NO	NO	No Action: No standard exceeded
OD-SO-C-01	Mercury		0.0230		mg/kg	0.0269	6.11	NO	NO	No Action: No standard exceeded
OD-SO-C-01	1,3,5-Trinitrobenzene	<	29.0000	U	µg/kg	NA	NA	NO	NO	No Action: No standard exceeded
OD-SO-C-01	1,3-Dinitrobenzene	<	12.0000	U	µg/kg	NA	NA	NO	NO	No Action: No standard exceeded
OD-SO-C-01	2-Amino-4,6-Dinitrotoluene	<	19.0000	U	µg/kg	NA	NA	NO	NO	No Action: No standard exceeded
OD-SO-C-01	4-Amino-2,6-Dinitrotoluene	<	36.0000	U	µg/kg	NA	NA	NO	NO	No Action: No standard exceeded
OD-SO-C-01	2,4-Dinitrotoluene	<	24.0000	U	µg/kg	NA	120000	NO	NO	No Action: No standard exceeded
OD-SO-C-01	2,6-Dinitrotoluene	<	26.0000	U	µg/kg	NA	NA	NO	NO	No Action: No standard exceeded
OD-SO-C-01	HMX	<	18.0000	U	µg/kg	NA	3000000	NO	NO	No Action: No standard exceeded
OD-SO-C-01	m-Nitrotoluene	<	25.0000	U	µg/kg	NA	410000	NO	NO	No Action: No standard exceeded
OD-SO-C-01	Nitrobenzene	<	10.0000	U	µg/kg	NA	21800	NO	NO	No Action: No standard exceeded
OD-SO-C-01	o-Nitrotoluene	<	20.0000	U	µg/kg	NA	410000	NO	NO	No Action: No standard exceeded
OD-SO-C-01	Pentaerythritol Tetranitrate	<	210.0000	U	µg/kg	61300	NA	NO	NO	No Action: No standard exceeded
OD-SO-C-01	p-Nitrotoluene	<	48.0000	U	µg/kg	NA	410000	NO	NO	No Action: No standard exceeded
OD-SO-C-01	RDX	<	79.0000	U	µg/kg	NA	4420	NO	NO	No Action: No standard exceeded
OD-SO-C-01	Tetryl	<	26.0000	U	µg/kg	NA	NA	NO	NO	No Action: No standard exceeded
OD-SO-C-01	2,4,6-Trinitrotoluene (TNT)	<	18.0000	U	µg/kg	NA	30000	NO	NO	No Action: No standard exceeded
OD-SO-C-02	Antimony		0.4300		mg/kg	3.5279	31.3	NO	NO	No Action: No standard exceeded
OD-SO-C-02	Arsenic		1.0000		mg/kg	1.4963	3.9	NO	NO	No Action: No standard exceeded
OD-SO-C-02	Barium		43.9000	B	mg/kg	79.4971	5450	NO	NO	No Action: No standard exceeded
OD-SO-C-02	Beryllium		0.1100		mg/kg	0.42	156	NO	NO	No Action: No standard exceeded
OD-SO-C-02	Cadmium		0.1900		mg/kg	0.5417	74.1	NO	NO	No Action: No standard exceeded
OD-SO-C-02	Chromium		3.9000	B	mg/kg	9.5027	234	NO	NO	No Action: No standard exceeded
OD-SO-C-02	Copper		6.8000	B	mg/kg	9.1595	3130	NO	NO	No Action: No standard exceeded
OD-SO-C-02	Lead		3.6000	B	mg/kg	7.6508	400	NO	NO	No Action: No standard exceeded
OD-SO-C-02	Nickel		2.6000	B	mg/kg	6.5898	1560	NO	NO	No Action: No standard exceeded
OD-SO-C-02	Selenium		0.3100		mg/kg	2.2645	391	NO	NO	No Action: No standard exceeded

Exhibit H-1 (Table 1)
Analytical Sample Results

Location	Parameter		Value	Flags	Units	20,000 UTL[1]	NMED SSL[2]	>UTL?	>SSL?	Evaluation
OD-SO-C-02	Silver	<	0.0440	U	mg/kg	0.7328	391	NO	NO	No Action: No standard exceeded
OD-SO-C-02	Mercury	<	0.0190	U	mg/kg	0.0269	6.11	NO	NO	No Action: No standard exceeded
OD-SO-C-02	1,3,5-Trinitrobenzene	<	29.0000	U	µg/kg	NA	NA	NO	NO	No Action: No standard exceeded
OD-SO-C-02	1,3-Dinitrobenzene	<	12.0000	U	µg/kg	NA	NA	NO	NO	No Action: No standard exceeded
OD-SO-C-02	2-Amino-4,6-Dinitrotoluene	<	19.0000	U	µg/kg	NA	NA	NO	NO	No Action: No standard exceeded
OD-SO-C-02	4-Amino-2,6-Dinitrotoluene	<	36.0000	U	µg/kg	NA	NA	NO	NO	No Action: No standard exceeded
OD-SO-C-02	2,4-Dinitrotoluene	<	24.0000	U	µg/kg	NA	120000	NO	NO	No Action: No standard exceeded
OD-SO-C-02	2,6-Dinitrotoluene	<	26.0000	U	µg/kg	NA	NA	NO	NO	No Action: No standard exceeded
OD-SO-C-02	HMX	<	18.0000	U	µg/kg	NA	3000000	NO	NO	No Action: No standard exceeded
OD-SO-C-02	m-Nitrotoluene	<	25.0000	U	µg/kg	NA	410000	NO	NO	No Action: No standard exceeded
OD-SO-C-02	Nitrobenzene		39.0000		µg/kg	NA	21800	NO	NO	No Action: No standard exceeded
OD-SO-C-02	o-Nitrotoluene	<	20.0000	U	µg/kg	NA	410000	NO	NO	No Action: No standard exceeded
OD-SO-C-02	Pentaerythritol Tetranitrate	<	210.0000	U	µg/kg	61300	NA	NO	NO	No Action: No standard exceeded
OD-SO-C-02	p-Nitrotoluene	<	48.0000	U	µg/kg	NA	410000	NO	NO	No Action: No standard exceeded
OD-SO-C-02	RDX	<	79.0000	U	µg/kg	NA	4420	NO	NO	No Action: No standard exceeded
OD-SO-C-02	Tetryl	<	26.0000	U	µg/kg	NA	NA	NO	NO	No Action: No standard exceeded
OD-SO-C-02	2,4,6-Trinitrotoluene (TNT)	<	18.0000	U	µg/kg	NA	30000	NO	NO	No Action: No standard exceeded
OD-SO-C-03	Antimony		0.6300		mg/kg	3.5279	31.3	NO	NO	No Action: No standard exceeded
OD-SO-C-03	Arsenic		1.1000		mg/kg	1.4963	3.9	NO	NO	No Action: No standard exceeded
OD-SO-C-03	Barium		36.1000	B	mg/kg	79.4971	5450	NO	NO	No Action: No standard exceeded
OD-SO-C-03	Beryllium		0.1000		mg/kg	0.42	156	NO	NO	No Action: No standard exceeded
OD-SO-C-03	Chromium		3.9000	B	mg/kg	9.5027	234	NO	NO	No Action: No standard exceeded
OD-SO-C-03	Copper		6.5000	B	mg/kg	9.1595	3130	NO	NO	No Action: No standard exceeded
OD-SO-C-03	Lead		5.9000	B	mg/kg	7.6508	400	NO	NO	No Action: No standard exceeded
OD-SO-C-03	Nickel		2.6000	B	mg/kg	6.5898	1560	NO	NO	No Action: No standard exceeded
OD-SO-C-03	Selenium	<	0.2400	U	mg/kg	2.2645	391	NO	NO	No Action: No standard exceeded
OD-SO-C-03	Silver		0.0860		mg/kg	0.7328	391	NO	NO	No Action: No standard exceeded
OD-SO-C-03	Mercury	<	0.0170	U	mg/kg	0.0269	6.11	NO	NO	No Action: No standard exceeded
OD-SO-C-03	1,3,5-Trinitrobenzene	<	29.0000	U	µg/kg	NA	NA	NO	NO	No Action: No standard exceeded
OD-SO-C-03	1,3-Dinitrobenzene	<	12.0000	U	µg/kg	NA	NA	NO	NO	No Action: No standard exceeded
OD-SO-C-03	2-Amino-4,6-Dinitrotoluene	<	19.0000	U	µg/kg	NA	NA	NO	NO	No Action: No standard exceeded
OD-SO-C-03	4-Amino-2,6-Dinitrotoluene	<	36.0000	U	µg/kg	NA	NA	NO	NO	No Action: No standard exceeded
OD-SO-C-03	2,4-Dinitrotoluene	<	24.0000	U	µg/kg	NA	120000	NO	NO	No Action: No standard exceeded
OD-SO-C-03	2,6-Dinitrotoluene	<	26.0000	U	µg/kg	NA	NA	NO	NO	No Action: No standard exceeded
OD-SO-C-03	HMX	<	18.0000	U	µg/kg	NA	3000000	NO	NO	No Action: No standard exceeded
OD-SO-C-03	m-Nitrotoluene	<	25.0000	U	µg/kg	NA	410000	NO	NO	No Action: No standard exceeded
OD-SO-C-03	Nitrobenzene		45.0000		µg/kg	NA	21800	NO	NO	No Action: No standard exceeded
OD-SO-C-03	o-Nitrotoluene	<	20.0000	U	µg/kg	NA	410000	NO	NO	No Action: No standard exceeded
OD-SO-C-03	Pentaerythritol Tetranitrate	<	210.0000	U	µg/kg	61300	NA	NO	NO	No Action: No standard exceeded
OD-SO-C-03	p-Nitrotoluene	<	48.0000	U	µg/kg	NA	410000	NO	NO	No Action: No standard exceeded
OD-SO-C-03	RDX		250.0000		µg/kg	NA	4420	NO	NO	No Action: No standard exceeded
OD-SO-C-03	Tetryl	<	26.0000	U	µg/kg	NA	NA	NO	NO	No Action: No standard exceeded
OD-SO-C-03	2,4,6-Trinitrotoluene (TNT)	<	18.0000	U	µg/kg	NA	30000	NO	NO	No Action: No standard exceeded

Exhibit H-1 (Table 1)
Analytical Sample Results

Location	Parameter		Value	Flags	Units	20,000 UTL[1]	NMED SSL[2]	>UTL?	>SSL?	Evaluation
OD-SO-C-04	Antimony		0.6000		mg/kg	3.5279	31.3	NO	NO	No Action: No standard exceeded
OD-SO-C-04	Beryllium		0.4200		mg/kg	0.42	156	NO	NO	No Action: No standard exceeded
OD-SO-C-04	Selenium	<	0.2600	U	mg/kg	2.2645	391	NO	NO	No Action: No standard exceeded
OD-SO-C-04	Silver	<	0.0460	U	mg/kg	0.7328	391	NO	NO	No Action: No standard exceeded
OD-SO-C-04	Mercury	<	0.0190	U	mg/kg	0.0269	6.11	NO	NO	No Action: No standard exceeded
OD-SO-C-04	1,3,5-Trinitrobenzene	<	29.0000	U	µg/kg	NA	NA	NO	NO	No Action: No standard exceeded
OD-SO-C-04	1,3-Dinitrobenzene	<	12.0000	U	µg/kg	NA	NA	NO	NO	No Action: No standard exceeded
OD-SO-C-04	2-Amino-4,6-Dinitrotoluene	<	19.0000	U	µg/kg	NA	NA	NO	NO	No Action: No standard exceeded
OD-SO-C-04	4-Amino-2,6-Dinitrotoluene	<	36.0000	U	µg/kg	NA	NA	NO	NO	No Action: No standard exceeded
OD-SO-C-04	2,4-Dinitrotoluene	<	24.0000	U	µg/kg	NA	120000	NO	NO	No Action: No standard exceeded
OD-SO-C-04	2,6-Dinitrotoluene	<	26.0000	U	µg/kg	NA	NA	NO	NO	No Action: No standard exceeded
OD-SO-C-04	HMX		94.0000		µg/kg	NA	3000000	NO	NO	No Action: No standard exceeded
OD-SO-C-04	m-Nitrotoluene	<	25.0000	U	µg/kg	NA	410000	NO	NO	No Action: No standard exceeded
OD-SO-C-04	Nitrobenzene	<	10.0000	U	µg/kg	NA	21800	NO	NO	No Action: No standard exceeded
OD-SO-C-04	o-Nitrotoluene	<	20.0000	U	µg/kg	NA	410000	NO	NO	No Action: No standard exceeded
OD-SO-C-04	Pentaerythritol Tetranitrate	<	210.0000	U	µg/kg	61300	NA	NO	NO	No Action: No standard exceeded
OD-SO-C-04	p-Nitrotoluene	<	48.0000	U	µg/kg	NA	410000	NO	NO	No Action: No standard exceeded
OD-SO-C-04	RDX	<	79.0000	U	µg/kg	NA	4420	NO	NO	No Action: No standard exceeded
OD-SO-C-04	Tetryl	<	26.0000	U	µg/kg	NA	NA	NO	NO	No Action: No standard exceeded
OD-SO-C-04	2,4,6-Trinitrotoluene (TNT)	<	18.0000	U	µg/kg	NA	30000	NO	NO	No Action: No standard exceeded

[1] 20,000 UTL: Final Background Study, 20000-Pound Open Detonation Unit, December 1997
[2] NMED SSL: New Mexico Environment Department Soil Screening Levels, February 2004, Revision 2

First Quarter 2004
20,000-Pound OD Unit
Monitoring Evaluation Report

Exhibit H-1 (Table 2)
Analytical Sample Results

Location	Parameter		Value	Flags	Units	20,000 UTL[1]	NMED SSL[2]	>UTL?	>SSL?	Evaluation
OD-SO-A-01	Mercury	<	0.04	U	mg/kg	0.0269	6.11	YES	NO	No Action: result flagged "U"
OD-SO-A-01	Nitroglycerine	<	6400.00	U	µg/kg	93.6772	347000	YES	NO	No Action: result flagged "U"
OD-SO-A-02	Mercury	<	0.04		mg/kg	0.0269	6.11	YES	NO	No Action:UTL exceeded but not SSL
OD-SO-A-02	Nitroglycerine	<	6300.00	B	µg/kg	93.6772	347000	YES	NO	No Action: result flagged "B"
OD-SO-A-03	Chromium		14.60	B	mg/kg	9.5027	234	YES	NO	No Action: result flagged "B"
OD-SO-A-03	Mercury	<	0.04		mg/kg	0.0269	6.11	YES	NO	No Action:UTL exceeded but not SSL
OD-SO-A-03	Nickel		7.60		mg/kg	6.5898	1560	YES	NO	No Action:UTL exceeded but not SSL
OD-SO-A-03	Nitroglycerine		6300.00		µg/kg	93.6772	347000	YES	NO	No Action:UTL exceeded but not SSL
OD-SO-A-04	Mercury	<	0.04	U	mg/kg	0.0269	6.11	YES	NO	No Action: result flagged "U"
OD-SO-A-04	Nitroglycerine	<	6400.00		µg/kg	93.6772	347000	YES	NO	No Action:UTL exceeded but not SSL
OD-SO-B-01	Antimony		17.10	U	mg/kg	3.5279	31.3	YES	NO	No Action: result flagged "U"
OD-SO-B-01	Cadmium		0.73	U	mg/kg	0.5417	74.1	YES	NO	No Action: result flagged "U"
OD-SO-B-01	Chromium		34.30	U	mg/kg	9.5027	234	YES	NO	No Action: result flagged "U"
OD-SO-B-01	Copper		137.00	U	mg/kg	9.1595	3130	YES	NO	No Action: result flagged "U"
OD-SO-B-01	Lead		11.00	U	mg/kg	7.6508	400	YES	NO	No Action: result flagged "U"
OD-SO-B-01	Mercury	<	0.04	U	mg/kg	0.0269	6.11	YES	NO	No Action: result flagged "U"
OD-SO-B-01	Nitroglycerine		11000.00	U	µg/kg	93.6772	347000	YES	NO	No Action: result flagged "U"
OD-SO-B-02	Mercury	<	0.04	U	mg/kg	0.0269	6.11	YES	NO	No Action: result flagged "U"
OD-SO-B-02	Nitroglycerine	<	6300.00	U	µg/kg	93.6772	347000	YES	NO	No Action: result flagged "U"
OD-SO-B-03	Cadmium		1.40	U	mg/kg	0.5417	74.1	YES	NO	No Action: result flagged "U"
OD-SO-B-03	Lead		7.90	U	mg/kg	7.6508	400	YES	NO	No Action: result flagged "U"
OD-SO-B-03	Mercury	<	0.04	U	mg/kg	0.0269	6.11	YES	NO	No Action: result flagged "U"
OD-SO-B-03	Nitroglycerine	<	6200.00	U	µg/kg	93.6772	347000	YES	NO	No Action: result flagged "U"
OD-SO-B-03A	Cadmium		1.20	U	mg/kg	0.5417	74.1	YES	NO	No Action: result flagged "U"
OD-SO-B-03A	Copper		10.80	U	mg/kg	9.1595	3130	YES	NO	No Action: result flagged "U"
OD-SO-B-03A	Lead		10.70	U	mg/kg	7.6508	400	YES	NO	No Action: result flagged "U"
OD-SO-B-03A	Mercury	<	0.04	U	mg/kg	0.0269	6.11	YES	NO	No Action: result flagged "U"
OD-SO-B-03A	Nitroglycerine	<	6400.00	B	µg/kg	93.6772	347000	YES	NO	No Action: result flagged "B"
OD-SO-B-04	Mercury	<	0.03	B	mg/kg	0.0269	6.11	YES	NO	No Action: result flagged "B"
OD-SO-B-04	Nitroglycerine	<	5500.00		µg/kg	93.6772	347000	YES	NO	No Action:UTL exceeded but not SSL
OD-SO-C-01	Arsenic		3.00	B	mg/kg	1.4963	3.9	YES	NO	No Action: result flagged "B"
OD-SO-C-01	Barium		90.80	B	mg/kg	79.4971	5450	YES	NO	No Action: result flagged "B"
OD-SO-C-01	Beryllium		0.51		mg/kg	0.42	156	YES	NO	No Action:UTL exceeded but not SSL
OD-SO-C-01	Chromium		11.90	*	mg/kg	9.5027	234	YES	NO	No Action:UTL exceeded but not SSL
OD-SO-C-01	Copper		14.60		mg/kg	9.1595	3130	YES	NO	No Action:UTL exceeded but not SSL
OD-SO-C-01	Lead		12.20	U	mg/kg	7.6508	400	YES	NO	No Action: result flagged "U"
OD-SO-C-01	Nickel		8.10		mg/kg	6.5898	1560	YES	NO	No Action:UTL exceeded but not SSL
OD-SO-C-01	Nitroglycerine	<	5900.00	U	µg/kg	93.6772	347000	YES	NO	No Action:UTL exceeded but not SSL

Exhibit H-1 (Table 2)
Analytical Sample Results

Location	Parameter		Value	Flags	Units	20,000 UTL[1]	NMED SSL[2]	>UTL?	>SSL?	Evaluation
OD-SO-C-02	Mercury	<	0.04	U	mg/kg	0.0269	6.11	YES	NO	No Action: result flagged "U"
OD-SO-C-02	Nitroglycerine	<	5900.00	U	µg/kg	93.6772	347000	YES	NO	No Action: result flagged "U"
OD-SO-C-03	Cadmium		1.10	U	mg/kg	0.5417	74.1	YES	NO	No Action: result flagged "U"
OD-SO-C-03	Mercury	<	0.03	U	mg/kg	0.0269	6.11	YES	NO	No Action: result flagged "U"
OD-SO-C-03	Nitroglycerine	<	5500.00	U	µg/kg	93.6772	347000	YES	NO	No Action: result flagged "U"
OD-SO-C-04	Arsenic		2.10	U	mg/kg	1.4963	3.9	YES	NO	No Action: result flagged "U"
OD-SO-C-04	Barium		79.70	U	mg/kg	79.4971	5450	YES	NO	No Action: result flagged "U"
OD-SO-C-04	Cadmium		0.73	U	mg/kg	0.5417	74.1	YES	NO	No Action: result flagged "U"
OD-SO-C-04	Chromium		10.30		mg/kg	9.5027	234	YES	NO	No Action;UTL exceeded but not SSL
OD-SO-C-04	Copper		16.30	U	mg/kg	9.1595	3130	YES	NO	No Action: result flagged "U"
OD-SO-C-04	Lead		14.50	U	mg/kg	7.6508	400	YES	NO	No Action: result flagged "U"
OD-SO-C-04	Mercury	<	0.04	U	mg/kg	0.0269	6.11	YES	NO	No Action: result flagged "U"
OD-SO-C-04	Nickel		7.20	U	mg/kg	6.5898	1560	YES	NO	No Action: result flagged "U"
OD-SO-C-04	Nitroglycerine	<	6200.00	U	µg/kg	93.6772	347000	YES	NO	No Action: result flagged "U"
OD-SO-A-01	Antimony		0.36	U	mg/kg	3.5279	31.3	NO	NO	No Action: No standard exceeded
OD-SO-A-01	Arsenic		1.20		mg/kg	1.4963	3.9	NO	NO	No Action: No standard exceeded
OD-SO-A-01	Barium		34.60	U	mg/kg	79.4971	5450	NO	NO	No Action: No standard exceeded
OD-SO-A-01	Beryllium		0.06	U	mg/kg	0.42	156	NO	NO	No Action: No standard exceeded
OD-SO-A-01	Cadmium		0.50	B	mg/kg	0.5417	74.1	NO	NO	No Action: No standard exceeded
OD-SO-A-01	Chromium		3.30	B	mg/kg	9.5027	234	NO	NO	No Action: No standard exceeded
OD-SO-A-01	Copper		3.90		mg/kg	9.1595	3130	NO	NO	No Action: No standard exceeded
OD-SO-A-01	Lead		2.90	B	mg/kg	7.6508	400	NO	NO	No Action: No standard exceeded
OD-SO-A-01	Nickel		2.10	B	mg/kg	6.5898	1560	NO	NO	No Action: No standard exceeded
OD-SO-A-01	Selenium	<	2.10		mg/kg	2.2645	391	NO	NO	No Action: No standard exceeded
OD-SO-A-01	Silver	<	0.32	*	mg/kg	0.7328	391	NO	NO	No Action: No standard exceeded
OD-SO-A-01	1,3,5-Trinitrobenzene	<	100.00		µg/kg	NA	NA	NO	NO	No Action: No standard exceeded
OD-SO-A-01	1,3-Dinitrobenzene	<	100.00	U	µg/kg	NA	NA	NO	NO	No Action: No standard exceeded
OD-SO-A-01	2,4-Dinitrotoluene	<	100.00		µg/kg	NA	120000	NO	NO	No Action: No standard exceeded
OD-SO-A-01	2,6-Dinitrotoluene	<	100.00	U	µg/kg	NA	NA	NO	NO	No Action: No standard exceeded
OD-SO-A-01	2-Amino-4,6-Dinitrotoluene	<	100.00	U	µg/kg	NA	NA	NO	NO	No Action: No standard exceeded
OD-SO-A-01	4-Amino-2,6-Dinitrotoluene	<	100.00	U	µg/kg	NA	NA	NO	NO	No Action: No standard exceeded
OD-SO-A-01	HMX		1000.00	U	µg/kg	NA	3000000	NO	NO	No Action: No standard exceeded
OD-SO-A-01	m-Nitrotoluene	<	200.00	U	µg/kg	NA	410000	NO	NO	No Action: No standard exceeded
OD-SO-A-01	Nitrobenzene	<	100.00	U	µg/kg	NA	21800	NO	NO	No Action: No standard exceeded
OD-SO-A-01	o-Nitrotoluene	<	200.00	U	µg/kg	NA	410000	NO	NO	No Action: No standard exceeded
OD-SO-A-01	Pentaerythritol Tetranitrate	<	500.00	U	µg/kg	61300	NA	NO	NO	No Action: No standard exceeded
OD-SO-A-01	p-Nitrotoluene	<	200.00	U	µg/kg	NA	410000	NO	NO	No Action: No standard exceeded
OD-SO-A-01	RDX		1300.00	U	µg/kg	NA	4420	NO	NO	No Action: No standard exceeded

Exhibit H-1 (Table 2)
Analytical Sample Results

Location	Parameter		Value	Flags	Units	20,000 UTL[1]	NMED SSL[2]	>UTL?	>SSL?	Evaluation
OD-SO-A-01	Tetryl	<	200.00	U	µg/kg	NA	NA	NO	NO	No Action: No standard exceeded
OD-SO-A-01	TNT	<	100.00	J	µg/kg	NA	30000	NO	NO	No Action: No standard exceeded
OD-SO-A-02	Antimony		0.46	U	mg/kg	3.5279	31.3	NO	NO	No Action: No standard exceeded
OD-SO-A-02	Arsenic		1.10	U	mg/kg	1.4963	3.9	NO	NO	No Action: No standard exceeded
OD-SO-A-02	Barium		27.50	U	mg/kg	79.4971	5450	NO	NO	No Action: No standard exceeded
OD-SO-A-02	Beryllium		0.03	U	mg/kg	0.42	156	NO	NO	No Action: No standard exceeded
OD-SO-A-02	Cadmium		0.10	U	mg/kg	0.5417	74.1	NO	NO	No Action: No standard exceeded
OD-SO-A-02	Chromium		2.50	U	mg/kg	9.5027	234	NO	NO	No Action: No standard exceeded
OD-SO-A-02	Copper		2.20	U	mg/kg	9.1595	3130	NO	NO	No Action: No standard exceeded
OD-SO-A-02	Lead		2.70	B	mg/kg	7.6508	400	NO	NO	No Action: No standard exceeded
OD-SO-A-02	Nickel		1.40	B	mg/kg	6.5898	1560	NO	NO	No Action: No standard exceeded
OD-SO-A-02	Selenium	<	1.90		mg/kg	2.2645	391	NO	NO	No Action: No standard exceeded
OD-SO-A-02	Silver	<	0.28	B	mg/kg	0.7328	391	NO	NO	No Action: No standard exceeded
OD-SO-A-02	1,3,5-Trinitrobenzene	<	100.00	B	µg/kg	NA	NA	NO	NO	No Action: No standard exceeded
OD-SO-A-02	1,3-Dinitrobenzene	<	100.00		µg/kg	NA	NA	NO	NO	No Action: No standard exceeded
OD-SO-A-02	2,4-Dinitrotoluene	<	100.00	*	µg/kg	NA	120000	NO	NO	No Action: No standard exceeded
OD-SO-A-02	2,6-Dinitrotoluene	<	100.00		µg/kg	NA	NA	NO	NO	No Action: No standard exceeded
OD-SO-A-02	2-Amino-4,6-Dinitrotoluene	<	100.00	U	µg/kg	NA	NA	NO	NO	No Action: No standard exceeded
OD-SO-A-02	4-Amino-2,6-Dinitrotoluene	<	100.00		µg/kg	NA	NA	NO	NO	No Action: No standard exceeded
OD-SO-A-02	HMX	<	200.00	U	µg/kg	NA	3000000	NO	NO	No Action: No standard exceeded
OD-SO-A-02	m-Nitrotoluene	<	200.00	U	µg/kg	NA	410000	NO	NO	No Action: No standard exceeded
OD-SO-A-02	Nitrobenzene		65.00	U	µg/kg	NA	21800	NO	NO	No Action: No standard exceeded
OD-SO-A-02	o-Nitrotoluene	<	200.00	U	µg/kg	NA	410000	NO	NO	No Action: No standard exceeded
OD-SO-A-02	Pentaerythritol Tetranitrate	<	500.00	U	µg/kg	61300	NA	NO	NO	No Action: No standard exceeded
OD-SO-A-02	p-Nitrotoluene	<	200.00	U	µg/kg	NA	410000	NO	NO	No Action: No standard exceeded
OD-SO-A-02	RDX	<	200.00	U	µg/kg	NA	4420	NO	NO	No Action: No standard exceeded
OD-SO-A-02	Tetryl	<	200.00	U	µg/kg	NA	NA	NO	NO	No Action: No standard exceeded
OD-SO-A-02	TNT	<	100.00	U	µg/kg	NA	30000	NO	NO	No Action: No standard exceeded
OD-SO-A-03	Antimony		0.56	U	mg/kg	3.5279	31.3	NO	NO	No Action: No standard exceeded
OD-SO-A-03	Arsenic		1.20	U	mg/kg	1.4963	3.9	NO	NO	No Action: No standard exceeded
OD-SO-A-03	Barium		29.60	J	mg/kg	79.4971	5450	NO	NO	No Action: No standard exceeded
OD-SO-A-03	Beryllium		0.04	J	mg/kg	0.42	156	NO	NO	No Action: No standard exceeded
OD-SO-A-03	Cadmium		0.34	U	mg/kg	0.5417	74.1	NO	NO	No Action: No standard exceeded
OD-SO-A-03	Copper		3.40	U	mg/kg	9.1595	3130	NO	NO	No Action: No standard exceeded
OD-SO-A-03	Lead		3.70	U	mg/kg	7.6508	400	NO	NO	No Action: No standard exceeded
OD-SO-A-03	Selenium	<	1.90	U	mg/kg	2.2645	391	NO	NO	No Action: No standard exceeded
OD-SO-A-03	Silver	<	0.29	U	mg/kg	0.7328	391	NO	NO	No Action: No standard exceeded
OD-SO-A-03	1,3,5-Trinitrobenzene	<	100.00	U	µg/kg	NA	NA	NO	NO	No Action: No standard exceeded

Exhibit H-1 (Table 2)
Analytical Sample Results

Location	Parameter		Value	Flags	Units	20,000 UTL[1]	NMED SSL[2]	>UTL?	>SSL?	Evaluation
OD-SO-A-03	1,3-Dinitrobenzene	<	100.00	B	µg/kg	NA	NA	NO	NO	No Action: No standard exceeded
OD-SO-A-03	2,4-Dinitrotoluene	<	100.00	B	µg/kg	NA	120000	NO	NO	No Action: No standard exceeded
OD-SO-A-03	2,6-Dinitrotoluene	<	100.00		µg/kg	NA	NA	NO	NO	No Action: No standard exceeded
OD-SO-A-03	2-Amino-4,6-Dinitrotoluene	<	100.00	B	µg/kg	NA	NA	NO	NO	No Action: No standard exceeded
OD-SO-A-03	4-Amino-2,6-Dinitrotoluene	<	100.00	B	µg/kg	NA	NA	NO	NO	No Action: No standard exceeded
OD-SO-A-03	HMX	<	200.00		µg/kg	NA	3000000	NO	NO	No Action: No standard exceeded
OD-SO-A-03	m-Nitrotoluene	<	200.00	*	µg/kg	NA	410000	NO	NO	No Action: No standard exceeded
OD-SO-A-03	Nitrobenzene		73.00		µg/kg	NA	21800	NO	NO	No Action: No standard exceeded
OD-SO-A-03	o-Nitrotoluene	<	200.00	U	µg/kg	NA	410000	NO	NO	No Action: No standard exceeded
OD-SO-A-03	Pentaerythritol Tetranitrate	<	500.00		µg/kg	61300	NA	NO	NO	No Action: No standard exceeded
OD-SO-A-03	p-Nitrotoluene	<	200.00	U	µg/kg	NA	410000	NO	NO	No Action: No standard exceeded
OD-SO-A-03	RDX	<	200.00	U	µg/kg	NA	4420	NO	NO	No Action: No standard exceeded
OD-SO-A-03	Tetryl	<	200.00	U	µg/kg	NA	NA	NO	NO	No Action: No standard exceeded
OD-SO-A-03	TNT	<	100.00	U	µg/kg	NA	30000	NO	NO	No Action: No standard exceeded
OD-SO-A-04	Antimony		0.55	U	mg/kg	3.5279	31.3	NO	NO	No Action: No standard exceeded
OD-SO-A-04	Arsenic		1.20	U	mg/kg	1.4963	3.9	NO	NO	No Action: No standard exceeded
OD-SO-A-04	Barium		35.40	U	mg/kg	79.4971	5450	NO	NO	No Action: No standard exceeded
OD-SO-A-04	Beryllium		0.07	U	mg/kg	0.42	156	NO	NO	No Action: No standard exceeded
OD-SO-A-04	Cadmium		0.32	U	mg/kg	0.5417	74.1	NO	NO	No Action: No standard exceeded
OD-SO-A-04	Chromium		3.60	U	mg/kg	9.5027	234	NO	NO	No Action: No standard exceeded
OD-SO-A-04	Copper		3.70	U	mg/kg	9.1595	3130	NO	NO	No Action: No standard exceeded
OD-SO-A-04	Lead		3.00	U	mg/kg	7.6508	400	NO	NO	No Action: No standard exceeded
OD-SO-A-04	Nickel		2.00	U	mg/kg	6.5898	1560	NO	NO	No Action: No standard exceeded
OD-SO-A-04	Selenium	<	2.10	U	mg/kg	2.2645	391	NO	NO	No Action: No standard exceeded
OD-SO-A-04	Silver	<	0.31	U	mg/kg	0.7328	391	NO	NO	No Action: No standard exceeded
OD-SO-A-04	1,3,5-Trinitrobenzene	<	100.00	U	µg/kg	NA	NA	NO	NO	No Action: No standard exceeded
OD-SO-A-04	1,3-Dinitrobenzene	<	100.00	U	µg/kg	NA	NA	NO	NO	No Action: No standard exceeded
OD-SO-A-04	2,4-Dinitrotoluene	<	100.00	U	µg/kg	NA	120000	NO	NO	No Action: No standard exceeded
OD-SO-A-04	2,6-Dinitrotoluene	<	100.00	U	µg/kg	NA	NA	NO	NO	No Action: No standard exceeded
OD-SO-A-04	2-Amino-4,6-Dinitrotoluene	<	100.00		µg/kg	NA	NA	NO	NO	No Action: No standard exceeded
OD-SO-A-04	4-Amino-2,6-Dinitrotoluene	<	100.00	B	µg/kg	NA	NA	NO	NO	No Action: No standard exceeded
OD-SO-A-04	HMX	<	200.00		µg/kg	NA	3000000	NO	NO	No Action: No standard exceeded
OD-SO-A-04	m-Nitrotoluene	<	200.00	B	µg/kg	NA	410000	NO	NO	No Action: No standard exceeded
OD-SO-A-04	Nitrobenzene	<	100.00		µg/kg	NA	21800	NO	NO	No Action: No standard exceeded
OD-SO-A-04	o-Nitrotoluene	<	200.00		µg/kg	NA	410000	NO	NO	No Action: No standard exceeded
OD-SO-A-04	Pentaerythritol Tetranitrate	<	500.00	*	µg/kg	61300	NA	NO	NO	No Action: No standard exceeded
OD-SO-A-04	p-Nitrotoluene	<	200.00		µg/kg	NA	410000	NO	NO	No Action: No standard exceeded
OD-SO-A-04	RDX	<	200.00	U	µg/kg	NA	4420	NO	NO	No Action: No standard exceeded

Exhibit H-1 (Table 2)
Analytical Sample Results

Location	Parameter		Value	Flags	Units	20,000 UTL[1]	NMED SSL[2]	>UTL?	>SSL?	Evaluation
OD-SO-A-04	Tetryl	<	200.00		µg/kg	NA	NA	NO	NO	No Action: No standard exceeded
OD-SO-A-04	TNT	<	100.00	U	µg/kg	NA	30000	NO	NO	No Action: No standard exceeded
OD-SO-B-01	Arsenic		1.10	B	mg/kg	1.4963	3.9	NO	NO	No Action: No standard exceeded
OD-SO-B-01	Barium		35.50	U	mg/kg	79.4971	5450	NO	NO	No Action: No standard exceeded
OD-SO-B-01	Beryllium		0.06	U	mg/kg	0.42	156	NO	NO	No Action: No standard exceeded
OD-SO-B-01	Nickel		2.40	U	mg/kg	6.5898	1560	NO	NO	No Action: No standard exceeded
OD-SO-B-01	Selenium	<	2.00	U	mg/kg	2.2645	391	NO	NO	No Action: No standard exceeded
OD-SO-B-01	Silver		0.05	U	mg/kg	0.7328	391	NO	NO	No Action: No standard exceeded
OD-SO-B-01	1,3,5-Trinitrobenzene	<	100.00	U	µg/kg	NA	NA	NO	NO	No Action: No standard exceeded
OD-SO-B-01	1,3-Dinitrobenzene	<	100.00	U	µg/kg	NA	NA	NO	NO	No Action: No standard exceeded
OD-SO-B-01	2,4-Dinitrotoluene	<	100.00	U	µg/kg	NA	120000	NO	NO	No Action: No standard exceeded
OD-SO-B-01	2,6-Dinitrotoluene	<	100.00	U	µg/kg	NA	NA	NO	NO	No Action: No standard exceeded
OD-SO-B-01	2-Amino-4,6-Dinitrotoluene	<	100.00		µg/kg	NA	NA	NO	NO	No Action: No standard exceeded
OD-SO-B-01	4-Amino-2,6-Dinitrotoluene	<	100.00		µg/kg	NA	NA	NO	NO	No Action: No standard exceeded
OD-SO-B-01	HMX	<	200.00	U	µg/kg	NA	3000000	NO	NO	No Action: No standard exceeded
OD-SO-B-01	m-Nitrotoluene	<	200.00	U	µg/kg	NA	410000	NO	NO	No Action: No standard exceeded
OD-SO-B-01	Nitrobenzene		460.00	U	µg/kg	NA	21800	NO	NO	No Action: No standard exceeded
OD-SO-B-01	o-Nitrotoluene	<	200.00	U	µg/kg	NA	410000	NO	NO	No Action: No standard exceeded
OD-SO-B-01	Pentaerythritol Tetranitrate	<	500.00	U	µg/kg	61300	NA	NO	NO	No Action: No standard exceeded
OD-SO-B-01	p-Nitrotoluene	<	200.00	U	µg/kg	NA	410000	NO	NO	No Action: No standard exceeded
OD-SO-B-01	RDX	<	200.00	B	µg/kg	NA	4420	NO	NO	No Action: No standard exceeded
OD-SO-B-01	Tetryl	<	200.00	B	µg/kg	NA	NA	NO	NO	No Action: No standard exceeded
OD-SO-B-01	TNT	<	100.00		µg/kg	NA	30000	NO	NO	No Action: No standard exceeded
OD-SO-B-02	Antimony		0.48	U	mg/kg	3.5279	31.3	NO	NO	No Action: No standard exceeded
OD-SO-B-02	Arsenic		0.49	B	mg/kg	1.4963	3.9	NO	NO	No Action: No standard exceeded
OD-SO-B-02	Barium		27.10		mg/kg	79.4971	5450	NO	NO	No Action: No standard exceeded
OD-SO-B-02	Beryllium	<	0.21	*	mg/kg	0.42	156	NO	NO	No Action: No standard exceeded
OD-SO-B-02	Cadmium		0.04		mg/kg	0.5417	74.1	NO	NO	No Action: No standard exceeded
OD-SO-B-02	Chromium		2.00	U	mg/kg	9.5027	234	NO	NO	No Action: No standard exceeded
OD-SO-B-02	Copper		2.00		mg/kg	9.1595	3130	NO	NO	No Action: No standard exceeded
OD-SO-B-02	Lead		1.60	U	mg/kg	7.6508	400	NO	NO	No Action: No standard exceeded
OD-SO-B-02	Nickel		1.30	U	mg/kg	6.5898	1560	NO	NO	No Action: No standard exceeded
OD-SO-B-02	Selenium	<	2.10	U	mg/kg	2.2645	391	NO	NO	No Action: No standard exceeded
OD-SO-B-02	Silver	<	0.31	U	mg/kg	0.7328	391	NO	NO	No Action: No standard exceeded
OD-SO-B-02	1,3,5-Trinitrobenzene	<	100.00	U	µg/kg	NA	NA	NO	NO	No Action: No standard exceeded
OD-SO-B-02	1,3-Dinitrobenzene	<	100.00	U	µg/kg	NA	NA	NO	NO	No Action: No standard exceeded
OD-SO-B-02	2,4-Dinitrotoluene	<	100.00	U	µg/kg	NA	120000	NO	NO	No Action: No standard exceeded
OD-SO-B-02	2,6-Dinitrotoluene	<	100.00	U	µg/kg	NA	NA	NO	NO	No Action: No standard exceeded

Exhibit H-1 (Table 2)
Analytical Sample Results

Location	Parameter		Value	Flags	Units	20,000 UTL[1]	NMED SSL[2]	>UTL?	>SSL?	Evaluation
OD-SO-B-02	2-Amino-4,6-Dinitrotoluene	<	100.00	U	µg/kg	NA	NA	NO	NO	No Action: No standard exceeded
OD-SO-B-02	4-Amino-2,6-Dinitrotoluene	<	100.00	U	µg/kg	NA	NA	NO	NO	No Action: No standard exceeded
OD-SO-B-02	HMX	<	200.00	U	µg/kg	NA	3000000	NO	NO	No Action: No standard exceeded
OD-SO-B-02	m-Nitrotoluene	<	200.00	U	µg/kg	NA	410000	NO	NO	No Action: No standard exceeded
OD-SO-B-02	Nitrobenzene	<	100.00	U	µg/kg	NA	21800	NO	NO	No Action: No standard exceeded
OD-SO-B-02	o-Nitrotoluene	<	200.00	U	µg/kg	NA	410000	NO	NO	No Action: No standard exceeded
OD-SO-B-02	Pentaerythritol Tetranitrate	<	500.00	U	µg/kg	61300	NA	NO	NO	No Action: No standard exceeded
OD-SO-B-02	p-Nitrotoluene	<	200.00	U	µg/kg	NA	410000	NO	NO	No Action: No standard exceeded
OD-SO-B-02	RDX		290.00		µg/kg	NA	4420	NO	NO	No Action: No standard exceeded
OD-SO-B-02	Tetryl	<	200.00	U	µg/kg	NA	NA	NO	NO	No Action: No standard exceeded
OD-SO-B-02	TNT	<	100.00	U	µg/kg	NA	30000	NO	NO	No Action: No standard exceeded
OD-SO-B-03	Antimony		0.43	B	mg/kg	3.5279	31.3	NO	NO	No Action: No standard exceeded
OD-SO-B-03	Arsenic		1.40	B	mg/kg	1.4963	3.9	NO	NO	No Action: No standard exceeded
OD-SO-B-03	Barium		37.10		mg/kg	79.4971	5450	NO	NO	No Action: No standard exceeded
OD-SO-B-03	Beryllium		0.08	B	mg/kg	0.42	156	NO	NO	No Action: No standard exceeded
OD-SO-B-03	Chromium		4.40		mg/kg	9.5027	234	NO	NO	No Action: No standard exceeded
OD-SO-B-03	Copper		8.20		mg/kg	9.1595	3130	NO	NO	No Action: No standard exceeded
OD-SO-B-03	Nickel		2.60	*	mg/kg	6.5898	1560	NO	NO	No Action: No standard exceeded
OD-SO-B-03	Selenium	<	2.00		mg/kg	2.2645	391	NO	NO	No Action: No standard exceeded
OD-SO-B-03	Silver		0.08	U	mg/kg	0.7328	391	NO	NO	No Action: No standard exceeded
OD-SO-B-03	1,3,5-Trinitrobenzene	<	100.00		µg/kg	NA	NA	NO	NO	No Action: No standard exceeded
OD-SO-B-03	1,3-Dinitrobenzene	<	100.00	U	µg/kg	NA	NA	NO	NO	No Action: No standard exceeded
OD-SO-B-03	2,4-Dinitrotoluene	<	100.00	B	µg/kg	NA	120000	NO	NO	No Action: No standard exceeded
OD-SO-B-03	2,6-Dinitrotoluene	<	100.00	U	µg/kg	NA	NA	NO	NO	No Action: No standard exceeded
OD-SO-B-03	2-Amino-4,6-Dinitrotoluene	<	100.00	U	µg/kg	NA	NA	NO	NO	No Action: No standard exceeded
OD-SO-B-03	4-Amino-2,6-Dinitrotoluene	<	100.00	U	µg/kg	NA	NA	NO	NO	No Action: No standard exceeded
OD-SO-B-03	HMX	<	200.00	U	µg/kg	NA	3000000	NO	NO	No Action: No standard exceeded
OD-SO-B-03	m-Nitrotoluene	<	200.00	U	µg/kg	NA	410000	NO	NO	No Action: No standard exceeded
OD-SO-B-03	Nitrobenzene		100.00	U	µg/kg	NA	21800	NO	NO	No Action: No standard exceeded
OD-SO-B-03	o-Nitrotoluene	<	200.00	U	µg/kg	NA	410000	NO	NO	No Action: No standard exceeded
OD-SO-B-03	Pentaerythritol Tetranitrate	<	500.00	U	µg/kg	61300	NA	NO	NO	No Action: No standard exceeded
OD-SO-B-03	p-Nitrotoluene	<	200.00	U	µg/kg	NA	410000	NO	NO	No Action: No standard exceeded
OD-SO-B-03	RDX	<	200.00		µg/kg	NA	4420	NO	NO	No Action: No standard exceeded
OD-SO-B-03	Tetryl	<	200.00	U	µg/kg	NA	NA	NO	NO	No Action: No standard exceeded
OD-SO-B-03	TNT	<	100.00	U	µg/kg	NA	30000	NO	NO	No Action: No standard exceeded
OD-SO-B-03A	Antimony		0.50	U	mg/kg	3.5279	31.3	NO	NO	No Action: No standard exceeded
OD-SO-B-03A	Arsenic		1.20	U	mg/kg	1.4963	3.9	NO	NO	No Action: No standard exceeded
OD-SO-B-03A	Barium		39.40	U	mg/kg	79.4971	5450	NO	NO	No Action: No standard exceeded

Exhibit H-1 (Table 2)
Analytical Sample Results

Location	Parameter		Value	Flags	Units	20,000 UTL[1]	NMED SSL[2]	>UTL?	>SSL?	Evaluation
OD-SO-B-03A	Beryllium		0.09	U	mg/kg	0.42	156	NO	NO	No Action: No standard exceeded
OD-SO-B-03A	Chromium		4.30	U	mg/kg	9.5027	234	NO	NO	No Action: No standard exceeded
OD-SO-B-03A	Nickel		2.50	B	mg/kg	6.5898	1560	NO	NO	No Action: No standard exceeded
OD-SO-B-03A	Selenium	<	2.00	B	mg/kg	2.2645	391	NO	NO	No Action: No standard exceeded
OD-SO-B-03A	Silver	<	0.30		mg/kg	0.7328	391	NO	NO	No Action: No standard exceeded
OD-SO-B-03A	1,3,5-Trinitrobenzene	<	100.00	B	µg/kg	NA	NA	NO	NO	No Action: No standard exceeded
OD-SO-B-03A	1,3-Dinitrobenzene	<	100.00		µg/kg	NA	NA	NO	NO	No Action: No standard exceeded
OD-SO-B-03A	2,4-Dinitrotoluene		100.00		µg/kg	NA	120000	NO	NO	No Action: No standard exceeded
OD-SO-B-03A	2,6-Dinitrotoluene	<	100.00	*	µg/kg	NA	NA	NO	NO	No Action: No standard exceeded
OD-SO-B-03A	2-Amino-4,6-Dinitrotoluene	<	100.00		µg/kg	NA	NA	NO	NO	No Action: No standard exceeded
OD-SO-B-03A	4-Amino-2,6-Dinitrotoluene	<	100.00	U	µg/kg	NA	NA	NO	NO	No Action: No standard exceeded
OD-SO-B-03A	HMX	<	200.00		µg/kg	NA	3000000	NO	NO	No Action: No standard exceeded
OD-SO-B-03A	m-Nitrotoluene	<	200.00	U	µg/kg	NA	410000	NO	NO	No Action: No standard exceeded
OD-SO-B-03A	Nitrobenzene		290.00	U	µg/kg	NA	21800	NO	NO	No Action: No standard exceeded
OD-SO-B-03A	o-Nitrotoluene	<	200.00	U	µg/kg	NA	410000	NO	NO	No Action: No standard exceeded
OD-SO-B-03A	Pentaerythritol Tetranitrate	<	500.00	U	µg/kg	61300	NA	NO	NO	No Action: No standard exceeded
OD-SO-B-03A	p-Nitrotoluene	<	200.00	U	µg/kg	NA	410000	NO	NO	No Action: No standard exceeded
OD-SO-B-03A	RDX	<	200.00		µg/kg	NA	4420	NO	NO	No Action: No standard exceeded
OD-SO-B-03A	Tetryl	<	200.00	U	µg/kg	NA	NA	NO	NO	No Action: No standard exceeded
OD-SO-B-03A	TNT	<	100.00	U	µg/kg	NA	30000	NO	NO	No Action: No standard exceeded
OD-SO-B-04	Antimony	<	1.70	U	mg/kg	3.5279	31.3	NO	NO	No Action: No standard exceeded
OD-SO-B-04	Arsenic		0.62	U	mg/kg	1.4963	3.9	NO	NO	No Action: No standard exceeded
OD-SO-B-04	Barium		25.40	U	mg/kg	79.4971	5450	NO	NO	No Action: No standard exceeded
OD-SO-B-04	Beryllium		0.03		mg/kg	0.42	156	NO	NO	No Action: No standard exceeded
OD-SO-B-04	Cadmium		0.05	U	mg/kg	0.5417	74.1	NO	NO	No Action: No standard exceeded
OD-SO-B-04	Chromium		2.00	U	mg/kg	9.5027	234	NO	NO	No Action: No standard exceeded
OD-SO-B-04	Copper		2.40	U	mg/kg	9.1595	3130	NO	NO	No Action: No standard exceeded
OD-SO-B-04	Lead		1.90	U	mg/kg	7.6508	400	NO	NO	No Action: No standard exceeded
OD-SO-B-04	Nickel		1.40	U	mg/kg	6.5898	1560	NO	NO	No Action: No standard exceeded
OD-SO-B-04	Selenium	<	1.70	U	mg/kg	2.2645	391	NO	NO	No Action: No standard exceeded
OD-SO-B-04	Silver	<	0.26	U	mg/kg	0.7328	391	NO	NO	No Action: No standard exceeded
OD-SO-B-04	1,3,5-Trinitrobenzene	<	100.00	U	µg/kg	NA	NA	NO	NO	No Action: No standard exceeded
OD-SO-B-04	1,3-Dinitrobenzene	<	100.00	B	µg/kg	NA	NA	NO	NO	No Action: No standard exceeded

Exhibit H-1 (Table 2)
Analytical Sample Results

Location	Parameter		Value	Flags	Units	20,000 UTL[1]	NMED SSL[2]	>UTL?	>SSL?	Evaluation
OD-SO-B-04	2,4-Dinitrotoluene	<	100.00		µg/kg	NA	120000	NO	NO	No Action: No standard exceeded
OD-SO-B-04	2,6-Dinitrotoluene	<	100.00	B	µg/kg	NA	NA	NO	NO	No Action: No standard exceeded
OD-SO-B-04	2-Amino-4,6-Dinitrotoluene	<	100.00	B	µg/kg	NA	NA	NO	NO	No Action: No standard exceeded
OD-SO-B-04	4-Amino-2,6-Dinitrotoluene	<	100.00		µg/kg	NA	NA	NO	NO	No Action: No standard exceeded
OD-SO-B-04	HMX	<	200.00	*	µg/kg	NA	3000000	NO	NO	No Action: No standard exceeded
OD-SO-B-04	m-Nitrotoluene	<	200.00		µg/kg	NA	410000	NO	NO	No Action: No standard exceeded
OD-SO-B-04	Nitrobenzene	<	100.00	U	µg/kg	NA	21800	NO	NO	No Action: No standard exceeded
OD-SO-B-04	o-Nitrotoluene	<	200.00		µg/kg	NA	410000	NO	NO	No Action: No standard exceeded
OD-SO-B-04	Pentaerythritol Tetranitrate	<	500.00	U	µg/kg	61300	NA	NO	NO	No Action: No standard exceeded
OD-SO-B-04	p-Nitrotoluene	<	200.00	U	µg/kg	NA	410000	NO	NO	No Action: No standard exceeded
OD-SO-B-04	RDX	<	200.00	U	µg/kg	NA	4420	NO	NO	No Action: No standard exceeded
OD-SO-B-04	Tetryl	<	200.00	U	µg/kg	NA	NA	NO	NO	No Action: No standard exceeded
OD-SO-B-04	TNT	<	100.00	U	µg/kg	NA	30000	NO	NO	No Action: No standard exceeded
OD-SO-C-01	Antimony		0.52	U	mg/kg	3.5279	31.3	NO	NO	No Action: No standard exceeded
OD-SO-C-01	Cadmium		0.35	U	mg/kg	0.5417	74.1	NO	NO	No Action: No standard exceeded
OD-SO-C-01	Mercury		0.02	U	mg/kg	0.0269	6.11	NO	NO	No Action: No standard exceeded
OD-SO-C-01	Selenium	<	1.80	U	mg/kg	2.2645	391	NO	NO	No Action: No standard exceeded
OD-SO-C-01	Silver	<	0.26	U	mg/kg	0.7328	391	NO	NO	No Action: No standard exceeded
OD-SO-C-01	1,3,5-Trinitrobenzene	<	100.00	U	µg/kg	NA	NA	NO	NO	No Action: No standard exceeded
OD-SO-C-01	1,3-Dinitrobenzene	<	100.00	U	µg/kg	NA	NA	NO	NO	No Action: No standard exceeded
OD-SO-C-01	2,4-Dinitrotoluene	<	100.00	U	µg/kg	NA	120000	NO	NO	No Action: No standard exceeded
OD-SO-C-01	2,6-Dinitrotoluene	<	100.00	U	µg/kg	NA	NA	NO	NO	No Action: No standard exceeded
OD-SO-C-01	2-Amino-4,6-Dinitrotoluene	<	100.00	U	µg/kg	NA	NA	NO	NO	No Action: No standard exceeded
OD-SO-C-01	4-Amino-2,6-Dinitrotoluene	<	100.00	U	µg/kg	NA	NA	NO	NO	No Action: No standard exceeded
OD-SO-C-01	HMX	<	200.00	U	µg/kg	NA	3000000	NO	NO	No Action: No standard exceeded
OD-SO-C-01	m-Nitrotoluene	<	200.00	U	µg/kg	NA	410000	NO	NO	No Action: No standard exceeded
OD-SO-C-01	Nitrobenzene	<	100.00	U	µg/kg	NA	21800	NO	NO	No Action: No standard exceeded
OD-SO-C-01	o-Nitrotoluene	<	200.00	B	µg/kg	NA	410000	NO	NO	No Action: No standard exceeded
OD-SO-C-01	Pentaerythritol Tetranitrate	<	500.00		µg/kg	61300	NA	NO	NO	No Action: No standard exceeded

Exhibit H-1 (Table 2)
Analytical Sample Results

Location	Parameter		Value	Flags	Units	20,000 UTL[1]	NMED SSL[2]	>UTL?	>SSL?	Evaluation
OD-SO-C-01	p-Nitrotoluene	<	200.00		µg/kg	NA	410000	NO	NO	No Action: No standard exceeded
OD-SO-C-01	RDX	<	200.00		µg/kg	NA	4420	NO	NO	No Action: No standard exceeded
OD-SO-C-01	Tetryl	<	200.00	B	µg/kg	NA	NA	NO	NO	No Action: No standard exceeded
OD-SO-C-01	TNT	<	100.00		µg/kg	NA	30000	NO	NO	No Action: No standard exceeded
OD-SO-C-02	Antimony		0.43	*	mg/kg	3.5279	31.3	NO	NO	No Action: No standard exceeded
OD-SO-C-02	Arsenic		1.00		mg/kg	1.4963	3.9	NO	NO	No Action: No standard exceeded
OD-SO-C-02	Barium		43.90	B	mg/kg	79.4971	5450	NO	NO	No Action: No standard exceeded
OD-SO-C-02	Beryllium		0.11		mg/kg	0.42	156	NO	NO	No Action: No standard exceeded
OD-SO-C-02	Cadmium		0.19	U	mg/kg	0.5417	74.1	NO	NO	No Action: No standard exceeded
OD-SO-C-02	Chromium		3.90	U	mg/kg	9.5027	234	NO	NO	No Action: No standard exceeded
OD-SO-C-02	Copper		6.80	U	mg/kg	9.1595	3130	NO	NO	No Action: No standard exceeded
OD-SO-C-02	Lead		3.60	U	mg/kg	7.6508	400	NO	NO	No Action: No standard exceeded
OD-SO-C-02	Nickel		2.60	U	mg/kg	6.5898	1560	NO	NO	No Action: No standard exceeded
OD-SO-C-02	Selenium		0.31	U	mg/kg	2.2645	391	NO	NO	No Action: No standard exceeded
OD-SO-C-02	Silver	<	0.27	U	mg/kg	0.7328	391	NO	NO	No Action: No standard exceeded
OD-SO-C-02	1,3,5-Trinitrobenzene	<	100.00	U	µg/kg	NA	NA	NO	NO	No Action: No standard exceeded
OD-SO-C-02	1,3-Dinitrobenzene	<	100.00	U	µg/kg	NA	NA	NO	NO	No Action: No standard exceeded
OD-SO-C-02	2,4-Dinitrotoluene	<	100.00	U	µg/kg	NA	120000	NO	NO	No Action: No standard exceeded
OD-SO-C-02	2,6-Dinitrotoluene	<	100.00	U	µg/kg	NA	NA	NO	NO	No Action: No standard exceeded
OD-SO-C-02	2-Amino-4,6-Dinitrotoluene	<	100.00	U	µg/kg	NA	NA	NO	NO	No Action: No standard exceeded
OD-SO-C-02	4-Amino-2,6-Dinitrotoluene	<	100.00	U	µg/kg	NA	NA	NO	NO	No Action: No standard exceeded
OD-SO-C-02	HMX	<	200.00	U	µg/kg	NA	3000000	NO	NO	No Action: No standard exceeded
OD-SO-C-02	m-Nitrotoluene	<	200.00	U	µg/kg	NA	410000	NO	NO	No Action: No standard exceeded
OD-SO-C-02	Nitrobenzene		39.00	U	µg/kg	NA	21800	NO	NO	No Action: No standard exceeded
OD-SO-C-02	o-Nitrotoluene	<	200.00	U	µg/kg	NA	410000	NO	NO	No Action: No standard exceeded
OD-SO-C-02	Pentaerythritol Tetranitrate	<	500.00	U	µg/kg	61300	NA	NO	NO	No Action: No standard exceeded
OD-SO-C-02	p-Nitrotoluene	<	200.00	U	µg/kg	NA	410000	NO	NO	No Action: No standard exceeded
OD-SO-C-02	RDX	<	200.00	B	µg/kg	NA	4420	NO	NO	No Action: No standard exceeded
OD-SO-C-02	Tetryl	<	200.00	B	µg/kg	NA	NA	NO	NO	No Action: No standard exceeded

Exhibit H-1 (Table 2)
Analytical Sample Results

Location	Parameter		Value	Flags	Units	20,000 UTL[1]	NMED SSL[2]	>UTL?	>SSL?	Evaluation
OD-SO-C-02	TNT	<	100.00		µg/kg	NA	30000	NO	NO	No Action: No standard exceeded
OD-SO-C-03	Antimony		0.63	B	mg/kg	3.5279	31.3	NO	NO	No Action: No standard exceeded
OD-SO-C-03	Arsenic		1.10	B	mg/kg	1.4963	3.9	NO	NO	No Action: No standard exceeded
OD-SO-C-03	Barium		36.10		mg/kg	79.4971	5450	NO	NO	No Action: No standard exceeded
OD-SO-C-03	Beryllium		0.10	*	mg/kg	0.42	156	NO	NO	No Action: No standard exceeded
OD-SO-C-03	Chromium		3.90		mg/kg	9.5027	234	NO	NO	No Action: No standard exceeded
OD-SO-C-03	Copper		6.50	U	mg/kg	9.1595	3130	NO	NO	No Action: No standard exceeded
OD-SO-C-03	Lead		5.90		mg/kg	7.6508	400	NO	NO	No Action: No standard exceeded
OD-SO-C-03	Nickel		2.60	B	mg/kg	6.5898	1560	NO	NO	No Action: No standard exceeded
OD-SO-C-03	Selenium	<	1.70	U	mg/kg	2.2645	391	NO	NO	No Action: No standard exceeded
OD-SO-C-03	Silver		0.09	U	mg/kg	0.7328	391	NO	NO	No Action: No standard exceeded
OD-SO-C-03	1,3,5-Trinitrobenzene	<	100.00	U	µg/kg	NA	NA	NO	NO	No Action: No standard exceeded
OD-SO-C-03	1,3-Dinitrobenzene	<	100.00	U	µg/kg	NA	NA	NO	NO	No Action: No standard exceeded
OD-SO-C-03	2,4-Dinitrotoluene	<	100.00	U	µg/kg	NA	120000	NO	NO	No Action: No standard exceeded
OD-SO-C-03	2,6-Dinitrotoluene	<	100.00	U	µg/kg	NA	NA	NO	NO	No Action: No standard exceeded
OD-SO-C-03	2-Amino-4,6-Dinitrotoluene	<	100.00	U	µg/kg	NA	NA	NO	NO	No Action: No standard exceeded
OD-SO-C-03	4-Amino-2,6-Dinitrotoluene	<	100.00	U	µg/kg	NA	NA	NO	NO	No Action: No standard exceeded
OD-SO-C-03	HMX	<	200.00	U	µg/kg	NA	3000000	NO	NO	No Action: No standard exceeded
OD-SO-C-03	m-Nitrotoluene	<	200.00	U	µg/kg	NA	410000	NO	NO	No Action: No standard exceeded
OD-SO-C-03	Nitrobenzene		45.00	J	µg/kg	NA	21800	NO	NO	No Action: No standard exceeded
OD-SO-C-03	o-Nitrotoluene	<	200.00	U	µg/kg	NA	410000	NO	NO	No Action: No standard exceeded
OD-SO-C-03	Pentaerythritol Tetranitrate	<	500.00	U	µg/kg	61300	NA	NO	NO	No Action: No standard exceeded
OD-SO-C-03	p-Nitrotoluene	<	200.00	U	µg/kg	NA	410000	NO	NO	No Action: No standard exceeded
OD-SO-C-03	RDX		250.00	U	µg/kg	NA	4420	NO	NO	No Action: No standard exceeded
OD-SO-C-03	Tetryl	<	200.00	U	µg/kg	NA	NA	NO	NO	No Action: No standard exceeded
OD-SO-C-03	TNT	<	100.00	U	µg/kg	NA	30000	NO	NO	No Action: No standard exceeded
OD-SO-C-04	Antimony		0.60	U	mg/kg	3.5279	31.3	NO	NO	No Action: No standard exceeded
OD-SO-C-04	Beryllium		0.42	B	mg/kg	0.42	156	NO	NO	No Action: No standard exceeded
OD-SO-C-04	Selenium	<	1.90	B	mg/kg	2.2645	391	NO	NO	No Action: No standard exceeded

Exhibit H-1 (Table 2)
Analytical Sample Results

Location	Parameter		Value	Flags	Units	20,000 UTL[1]	NMED SSL[2]	>UTL?	>SSL?	Evaluation
OD-SO-C-04	Silver	<	0.28		mg/kg	0.7328	391	NO	NO	No Action: No standard exceeded
OD-SO-C-04	1,3,5-Trinitrobenzene	<	100.00	B	µg/kg	NA	NA	NO	NO	No Action: No standard exceeded
OD-SO-C-04	1,3-Dinitrobenzene	<	100.00		µg/kg	NA	NA	NO	NO	No Action: No standard exceeded
OD-SO-C-04	2,4-Dinitrotoluene	<	100.00		µg/kg	NA	120000	NO	NO	No Action: No standard exceeded
OD-SO-C-04	2,6-Dinitrotoluene	<	100.00	*	µg/kg	NA	NA	NO	NO	No Action: No standard exceeded
OD-SO-C-04	2-Amino-4,6-Dinitrotoluene	<	100.00		µg/kg	NA	NA	NO	NO	No Action: No standard exceeded
OD-SO-C-04	4-Amino-2,6-Dinitrotoluene	<	100.00	U	µg/kg	NA	NA	NO	NO	No Action: No standard exceeded
OD-SO-C-04	HMX		94.00		µg/kg	NA	3000000	NO	NO	No Action: No standard exceeded
OD-SO-C-04	m-Nitrotoluene	<	200.00	U	µg/kg	NA	410000	NO	NO	No Action: No standard exceeded
OD-SO-C-04	Nitrobenzene	<	100.00	B	µg/kg	NA	21800	NO	NO	No Action: No standard exceeded
OD-SO-C-04	o-Nitrotoluene	<	200.00	U	µg/kg	NA	410000	NO	NO	No Action: No standard exceeded
OD-SO-C-04	Pentaerythritol Tetranitrate	<	500.00	U	µg/kg	61300	NA	NO	NO	No Action: No standard exceeded
OD-SO-C-04	p-Nitrotoluene	<	200.00	U	µg/kg	NA	410000	NO	NO	No Action: No standard exceeded
OD-SO-C-04	RDX	<	200.00	U	µg/kg	NA	4420	NO	NO	No Action: No standard exceeded
OD-SO-C-04	Tetryl	<	200.00	U	µg/kg	NA	NA	NO	NO	No Action: No standard exceeded
OD-SO-C-04	TNT	<	100.00	U	µg/kg	NA	30000	NO	NO	No Action: No standard exceeded
[1] 20,000 UTL:	Final Background Study, 20000-Pound Open Detonation Unit, December 1997									
[2] NMED SSL:	New Mexico Environment Department Soil Screening Levels, February 2004, Revision 2									

Exhibit H-1 (Table 3)
Analytical Sample Results

Location	Parameter		Value	Flags	Units	20,000 UTL[1]	NMED SSL[2]	>UTL?	>SSL?	Evaluation
OD-SO-A-01	Mercury	<	0.037	U	mg/kg	0.0269	6.11	YES	NO	No Action: result flagged "U"
OD-SO-A-01	Nitroglycerine	<	6,100	U	µg/kg	93.6772	347000	YES	NO	No Action: result flagged "U"
OD-SO-A-02	Mercury	<	0.037	U	mg/kg	0.0269	6.11	YES	NO	No Action: result flagged "U"
OD-SO-A-02	Nitroglycerine	<	5,900	U	µg/kg	93.6772	347000	YES	NO	No Action: result flagged "U"
OD-SO-A-03	Nitroglycerine	<	6,200	U	µg/kg	93.6772	347000	YES	NO	No Action: result flagged "U"
OD-SO-A-04	Lead		8.1		mg/kg	7.6508	400	YES	NO	No Action:UTL exceeded but not SSL
OD-SO-A-04	Mercury	<	0.039	U	mg/kg	0.0269	6.11	YES	NO	No Action: result flagged "U"
OD-SO-A-04	Nitroglycerine	<	6,200	U	µg/kg	93.6772	347000	YES	NO	No Action: result flagged "U"
OD-SO-B-01	Arsenic		2.2		mg/kg	1.4963	3.9	YES	NO	No Action:UTL exceeded but not SSL
OD-SO-B-01	Barium		81.6		mg/kg	79.4971	5450	YES	NO	No Action:UTL exceeded but not SSL
OD-SO-B-01	Beryllium		0.5		mg/kg	0.42	156	YES	NO	No Action:UTL exceeded but not SSL
OD-SO-B-01	Chromium		9.7		mg/kg	9.5027	234	YES	NO	No Action:UTL exceeded but not SSL
OD-SO-B-01	Copper		9.4	*	mg/kg	9.1595	3130	YES	NO	No Action:UTL exceeded but not SSL
OD-SO-B-01	Mercury	<	0.036	U	mg/kg	0.0269	6.11	YES	NO	No Action: result flagged "U"
OD-SO-B-01	Nitroglycerine	<	5,900	U	µg/kg	93.6772	347000	YES	NO	No Action: result flagged "U"
OD-SO-B-02	Mercury	<	0.04	U	mg/kg	0.0269	6.11	YES	NO	No Action: result flagged "U"
OD-SO-B-02	Nitroglycerine	<	6,500	U	µg/kg	93.6772	347000	YES	NO	No Action: result flagged "U"
OD-SO-B-03	Mercury	<	0.035	U	mg/kg	0.0269	6.11	YES	NO	No Action: result flagged "U"
OD-SO-B-03	Nitroglycerine	<	5,900	U	µg/kg	93.6772	347000	YES	NO	No Action: result flagged "U"
OD-SO-B-03A	Mercury	<	0.036	U	mg/kg	0.0269	6.11	YES	NO	No Action: result flagged "U"
OD-SO-B-03A	Nitroglycerine	<	5,700	U	µg/kg	93.6772	347000	YES	NO	No Action: result flagged "U"
OD-SO-B-04	Mercury	<	0.035	U	mg/kg	0.0269	6.11	YES	NO	No Action: result flagged "U"
OD-SO-B-04	Nitroglycerine	<	5,900	U	µg/kg	93.6772	347000	YES	NO	No Action: result flagged "U"
OD-SO-C-01	Mercury	<	0.036	U	mg/kg	0.0269	6.11	YES	NO	No Action: result flagged "U"
OD-SO-C-01	Nitroglycerine		160,000		µg/kg	93.6772	347000	YES	NO	No Action:UTL exceeded but not SSL
OD-SO-C-02	Copper		932	*	mg/kg	9.1595	3130	YES	NO	No Action:UTL exceeded but not SSL
OD-SO-C-02	Nitroglycerine	<	5,800	U	µg/kg	93.6772	347000	YES	NO	No Action: result flagged "U"
OD-SO-C-03	Mercury	<	0.035	U	mg/kg	0.0269	6.11	YES	NO	No Action: result flagged "U"
OD-SO-C-03	Nitroglycerine	<	5,800	U	µg/kg	93.6772	347000	YES	NO	No Action: result flagged "U"
OD-SO-C-04	Mercury	<	0.035	U	mg/kg	0.0269	6.11	YES	NO	No Action: result flagged "U"
OD-SO-C-04	Nitroglycerine	<	6,000	U	µg/kg	93.6772	347000	YES	NO	No Action: result flagged "U"
OD-SO-A-01	Antimony	<	2.1	U	mg/kg	3.5279	31.3	NO	NO	No Action: No standard exceeded
OD-SO-A-01	Arsenic		0.78	B	mg/kg	1.4963	3.9	NO	NO	No Action: No standard exceeded
OD-SO-A-01	Barium		31		mg/kg	79.4971	5450	NO	NO	No Action: No standard exceeded
OD-SO-A-01	Beryllium		0.13	B	mg/kg	0.42	156	NO	NO	No Action: No standard exceeded
OD-SO-A-01	Cadmium		0.14	B	mg/kg	0.5417	74.1	NO	NO	No Action: No standard exceeded
OD-SO-A-01	Chromium		2.6		mg/kg	9.5027	234	NO	NO	No Action: No standard exceeded
OD-SO-A-01	Copper		5.4	*	mg/kg	9.1595	3130	NO	NO	No Action: No standard exceeded
OD-SO-A-01	Lead		1.9		mg/kg	7.6508	400	NO	NO	No Action: No standard exceeded

Exhibit H-1 (Table 3)
Analytical Sample Results

Location	Parameter		Value	Flags	Units	20,000 UTL[1]	NMED SSL[2]	>UTL?	>SSL?	Evaluation
OD-SO-A-01	Nickel		1.8		mg/kg	6.5898	1560	NO	NO	No Action: No standard exceeded
OD-SO-A-01	Selenium	<	2.1	U	mg/kg	2.2645	391	NO	NO	No Action: No standard exceeded
OD-SO-A-01	Silver	<	0.32	U	mg/kg	0.7328	391	NO	NO	No Action: No standard exceeded
OD-SO-A-01	1,3,5-Trinitrobenzene	<	100	U	µg/kg	NA	NA	NO	NO	No Action: No standard exceeded
OD-SO-A-01	1,3-Dinitrobenzene	<	100	U	µg/kg	NA	NA	NO	NO	No Action: No standard exceeded
OD-SO-A-01	2,4,6-Trinitrotoluene	<	100	U	µg/kg	NA	30000	NO	NO	No Action: No standard exceeded
OD-SO-A-01	2,4-Dinitrotoluene	<	100	U	µg/kg	NA	120000	NO	NO	No Action: No standard exceeded
OD-SO-A-01	2,6-Dinitrotoluene	<	100	U	µg/kg	NA	NA	NO	NO	No Action: No standard exceeded
OD-SO-A-01	2-Amino-4,6-Dinitrotoluene	<	100	U	µg/kg	NA	NA	NO	NO	No Action: No standard exceeded
OD-SO-A-01	4-Amino-2,6-Dinitrotoluene	<	100	U	µg/kg	NA	NA	NO	NO	No Action: No standard exceeded
OD-SO-A-01	HMX	<	200	U	µg/kg	NA	3000000	NO	NO	No Action: No standard exceeded
OD-SO-A-01	m-Nitrotoluene	<	200	U	µg/kg	NA	410000	NO	NO	No Action: No standard exceeded
OD-SO-A-01	Nitrobenzene	<	100	U	µg/kg	NA	21800	NO	NO	No Action: No standard exceeded
OD-SO-A-01	o-Nitrotoluene	<	200	U	µg/kg	NA	410000	NO	NO	No Action: No standard exceeded
OD-SO-A-01	Pentaerythritol Tetranitrate	<	500	U	µg/kg	61300	NA	NO	NO	No Action: No standard exceeded
OD-SO-A-01	p-Nitrotoluene	<	200	U	µg/kg	NA	410000	NO	NO	No Action: No standard exceeded
OD-SO-A-01	RDX		250		µg/kg	NA	4420	NO	NO	No Action: No standard exceeded
OD-SO-A-01	Tetryl	<	200	U	µg/kg	NA	NA	NO	NO	No Action: No standard exceeded
OD-SO-A-02	Antimony	<	2.1	U	mg/kg	3.5279	31.3	NO	NO	No Action: No standard exceeded
OD-SO-A-02	Arsenic		0.68	B	mg/kg	1.4963	3.9	NO	NO	No Action: No standard exceeded
OD-SO-A-02	Barium		33		mg/kg	79.4971	5450	NO	NO	No Action: No standard exceeded
OD-SO-A-02	Beryllium		0.15	B	mg/kg	0.42	156	NO	NO	No Action: No standard exceeded
OD-SO-A-02	Cadmium		0.14	B	mg/kg	0.5417	74.1	NO	NO	No Action: No standard exceeded
OD-SO-A-02	Chromium		2.9		mg/kg	9.5027	234	NO	NO	No Action: No standard exceeded
OD-SO-A-02	Copper		3.5	*	mg/kg	9.1595	3130	NO	NO	No Action: No standard exceeded
OD-SO-A-02	Lead		1.6		mg/kg	7.6508	400	NO	NO	No Action: No standard exceeded
OD-SO-A-02	Nickel		1.5		mg/kg	6.5898	1560	NO	NO	No Action: No standard exceeded
OD-SO-A-02	Selenium	<	2.1	U	mg/kg	2.2645	391	NO	NO	No Action: No standard exceeded
OD-SO-A-02	Silver	<	0.32	U	mg/kg	0.7328	391	NO	NO	No Action: No standard exceeded
OD-SO-A-02	1,3,5-Trinitrobenzene	<	100	U	µg/kg	NA	NA	NO	NO	No Action: No standard exceeded
OD-SO-A-02	1,3-Dinitrobenzene	<	100	U	µg/kg	NA	NA	NO	NO	No Action: No standard exceeded
OD-SO-A-02	2,4,6-Trinitrotoluene	<	100	U	µg/kg	NA	30000	NO	NO	No Action: No standard exceeded
OD-SO-A-02	2,4-Dinitrotoluene	<	100	U	µg/kg	NA	120000	NO	NO	No Action: No standard exceeded
OD-SO-A-02	2,6-Dinitrotoluene	<	100	U	µg/kg	NA	NA	NO	NO	No Action: No standard exceeded
OD-SO-A-02	2-Amino-4,6-Dinitrotoluene	<	100	U	µg/kg	NA	NA	NO	NO	No Action: No standard exceeded
OD-SO-A-02	4-Amino-2,6-Dinitrotoluene	<	100	U	µg/kg	NA	NA	NO	NO	No Action: No standard exceeded
OD-SO-A-02	HMX	<	200	U	µg/kg	NA	3000000	NO	NO	No Action: No standard exceeded
OD-SO-A-02	m-Nitrotoluene	<	200	U	µg/kg	NA	410000	NO	NO	No Action: No standard exceeded
OD-SO-A-02	Nitrobenzene	<	100	U	µg/kg	NA	21800	NO	NO	No Action: No standard exceeded

Exhibit H-1 (Table 3)
Analytical Sample Results

Location	Parameter		Value	Flags	Units	20,000 UTL[1]	NMED SSL[2]	>UTL?	>SSL?	Evaluation
OD-SO-A-02	o-Nitrotoluene	<	200	U	µg/kg	NA	410000	NO	NO	No Action: No standard exceeded
OD-SO-A-02	Pentaerythritol Tetranitrate	<	500	U	µg/kg	61300	NA	NO	NO	No Action: No standard exceeded
OD-SO-A-02	p-Nitrotoluene	<	200	U	µg/kg	NA	410000	NO	NO	No Action: No standard exceeded
OD-SO-A-02	RDX		100	J	µg/kg	NA	4420	NO	NO	No Action: No standard exceeded
OD-SO-A-02	Tetryl	<	200	U	µg/kg	NA	NA	NO	NO	No Action: No standard exceeded
OD-SO-A-03	Antimony		0.4	B	mg/kg	3.5279	31.3	NO	NO	No Action: No standard exceeded
OD-SO-A-03	Arsenic		0.8	B	mg/kg	1.4963	3.9	NO	NO	No Action: No standard exceeded
OD-SO-A-03	Barium		38.7		mg/kg	79.4971	5450	NO	NO	No Action: No standard exceeded
OD-SO-A-03	Beryllium		0.13	B	mg/kg	0.42	156	NO	NO	No Action: No standard exceeded
OD-SO-A-03	Cadmium		0.18	B	mg/kg	0.5417	74.1	NO	NO	No Action: No standard exceeded
OD-SO-A-03	Chromium		2.8		mg/kg	9.5027	234	NO	NO	No Action: No standard exceeded
OD-SO-A-03	Copper		4.8	*	mg/kg	9.1595	3130	NO	NO	No Action: No standard exceeded
OD-SO-A-03	Lead		5.5		mg/kg	7.6508	400	NO	NO	No Action: No standard exceeded
OD-SO-A-03	Nickel		2.5		mg/kg	6.5898	1560	NO	NO	No Action: No standard exceeded
OD-SO-A-03	Selenium	<	2.2	U	mg/kg	2.2645	391	NO	NO	No Action: No standard exceeded
OD-SO-A-03	Silver	<	0.32	U	mg/kg	0.7328	391	NO	NO	No Action: No standard exceeded
OD-SO-A-03	Mercury		0.022	B	mg/kg	0.0269	6.11	NO	NO	No Action: No standard exceeded
OD-SO-A-03	1,3,5-Trinitrobenzene	<	100	U	µg/kg	NA	NA	NO	NO	No Action: No standard exceeded
OD-SO-A-03	1,3-Dinitrobenzene	<	100	U	µg/kg	NA	NA	NO	NO	No Action: No standard exceeded
OD-SO-A-03	2,4,6-Trinitrotoluene	<	100	U	µg/kg	NA	30000	NO	NO	No Action: No standard exceeded
OD-SO-A-03	2,4-Dinitrotoluene	<	100	U	µg/kg	NA	120000	NO	NO	No Action: No standard exceeded
OD-SO-A-03	2,6-Dinitrotoluene	<	100	U	µg/kg	NA	NA	NO	NO	No Action: No standard exceeded
OD-SO-A-03	2-Amino-4,6-Dinitrotoluene	<	100	U	µg/kg	NA	NA	NO	NO	No Action: No standard exceeded
OD-SO-A-03	4-Amino-2,6-Dinitrotoluene	<	100	U	µg/kg	NA	NA	NO	NO	No Action: No standard exceeded
OD-SO-A-03	HMX		190	J	µg/kg	NA	3000000	NO	NO	No Action: No standard exceeded
OD-SO-A-03	m-Nitrotoluene	<	200	U	µg/kg	NA	410000	NO	NO	No Action: No standard exceeded
OD-SO-A-03	Nitrobenzene	<	100	U	µg/kg	NA	21800	NO	NO	No Action: No standard exceeded
OD-SO-A-03	o-Nitrotoluene	<	200	U	µg/kg	NA	410000	NO	NO	No Action: No standard exceeded
OD-SO-A-03	Pentaerythritol Tetranitrate	<	500	U	µg/kg	61300	NA	NO	NO	No Action: No standard exceeded
OD-SO-A-03	p-Nitrotoluene	<	200	U	µg/kg	NA	410000	NO	NO	No Action: No standard exceeded
OD-SO-A-03	RDX		510		µg/kg	NA	4420	NO	NO	No Action: No standard exceeded
OD-SO-A-03	Tetryl	<	200	U	µg/kg	NA	NA	NO	NO	No Action: No standard exceeded
OD-SO-A-04	Antimony	<	2.1	U	mg/kg	3.5279	31.3	NO	NO	No Action: No standard exceeded
OD-SO-A-04	Arsenic		0.96	B	mg/kg	1.4963	3.9	NO	NO	No Action: No standard exceeded
OD-SO-A-04	Barium		37.7		mg/kg	79.4971	5450	NO	NO	No Action: No standard exceeded
OD-SO-A-04	Beryllium		0.14	B	mg/kg	0.42	156	NO	NO	No Action: No standard exceeded
OD-SO-A-04	Cadmium		0.2	B	mg/kg	0.5417	74.1	NO	NO	No Action: No standard exceeded
OD-SO-A-04	Chromium		3		mg/kg	9.5027	234	NO	NO	No Action: No standard exceeded
OD-SO-A-04	Copper		5.5	*	mg/kg	9.1595	3130	NO	NO	No Action: No standard exceeded

Exhibit H-1 (Table 3)
Analytical Sample Results

Location	Parameter		Value	Flags	Units	20,000 UTL[1]	NMED SSL[2]	>UTL?	>SSL?	Evaluation
OD-SO-A-04	Nickel		1.9		mg/kg	6.5898	1560	NO	NO	No Action: No standard exceeded
OD-SO-A-04	Selenium	<	2.1	U	mg/kg	2.2645	391	NO	NO	No Action: No standard exceeded
OD-SO-A-04	Silver	<	0.32	U	mg/kg	0.7328	391	NO	NO	No Action: No standard exceeded
OD-SO-A-04	1,3,5-Trinitrobenzene	<	100	U	µg/kg	NA	NA	NO	NO	No Action: No standard exceeded
OD-SO-A-04	1,3-Dinitrobenzene	<	100	U	µg/kg	NA	NA	NO	NO	No Action: No standard exceeded
OD-SO-A-04	2,4,6-Trinitrotoluene	<	100	U	µg/kg	NA	30000	NO	NO	No Action: No standard exceeded
OD-SO-A-04	2,4-Dinitrotoluene	<	100	U	µg/kg	NA	120000	NO	NO	No Action: No standard exceeded
OD-SO-A-04	2,6-Dinitrotoluene	<	100	U	µg/kg	NA	NA	NO	NO	No Action: No standard exceeded
OD-SO-A-04	2-Amino-4,6-Dinitrotoluene	<	100	U	µg/kg	NA	NA	NO	NO	No Action: No standard exceeded
OD-SO-A-04	4-Amino-2,6-Dinitrotoluene	<	100	U	µg/kg	NA	NA	NO	NO	No Action: No standard exceeded
OD-SO-A-04	HMX		670		µg/kg	NA	3000000	NO	NO	No Action: No standard exceeded
OD-SO-A-04	m-Nitrotoluene	<	200	U	µg/kg	NA	410000	NO	NO	No Action: No standard exceeded
OD-SO-A-04	Nitrobenzene		410		µg/kg	NA	21800	NO	NO	No Action: No standard exceeded
OD-SO-A-04	o-Nitrotoluene	<	200	U	µg/kg	NA	410000	NO	NO	No Action: No standard exceeded
OD-SO-A-04	Pentaerythritol Tetranitrate	<	500	U	µg/kg	61300	NA	NO	NO	No Action: No standard exceeded
OD-SO-A-04	p-Nitrotoluene	<	200	U	µg/kg	NA	410000	NO	NO	No Action: No standard exceeded
OD-SO-A-04	RDX		320		µg/kg	NA	4420	NO	NO	No Action: No standard exceeded
OD-SO-A-04	Tetryl	<	200	U	µg/kg	NA	NA	NO	NO	No Action: No standard exceeded
OD-SO-B-01	Antimony	<	2	U	mg/kg	3.5279	31.3	NO	NO	No Action: No standard exceeded
OD-SO-B-01	Cadmium		0.39	B	mg/kg	0.5417	74.1	NO	NO	No Action: No standard exceeded
OD-SO-B-01	Lead		6.8		mg/kg	7.6508	400	NO	NO	No Action: No standard exceeded
OD-SO-B-01	Nickel		6.4		mg/kg	6.5898	1560	NO	NO	No Action: No standard exceeded
OD-SO-B-01	Selenium	<	2	U	mg/kg	2.2645	391	NO	NO	No Action: No standard exceeded
OD-SO-B-01	Silver	<	0.3	U	mg/kg	0.7328	391	NO	NO	No Action: No standard exceeded
OD-SO-B-01	1,3,5-Trinitrobenzene	<	100	U	µg/kg	NA	NA	NO	NO	No Action: No standard exceeded
OD-SO-B-01	1,3-Dinitrobenzene	<	100	U	µg/kg	NA	NA	NO	NO	No Action: No standard exceeded
OD-SO-B-01	2,4,6-Trinitrotoluene	<	100	U	µg/kg	NA	30000	NO	NO	No Action: No standard exceeded
OD-SO-B-01	2,4-Dinitrotoluene	<	100	U	µg/kg	NA	120000	NO	NO	No Action: No standard exceeded
OD-SO-B-01	2,6-Dinitrotoluene	<	100	U	µg/kg	NA	NA	NO	NO	No Action: No standard exceeded
OD-SO-B-01	2-Amino-4,6-Dinitrotoluene	<	100	U	µg/kg	NA	NA	NO	NO	No Action: No standard exceeded
OD-SO-B-01	4-Amino-2,6-Dinitrotoluene	<	100	U	µg/kg	NA	NA	NO	NO	No Action: No standard exceeded
OD-SO-B-01	HMX	<	200	U	µg/kg	NA	3000000	NO	NO	No Action: No standard exceeded
OD-SO-B-01	m-Nitrotoluene	<	200	U	µg/kg	NA	410000	NO	NO	No Action: No standard exceeded
OD-SO-B-01	Nitrobenzene		63	J	µg/kg	NA	21800	NO	NO	No Action: No standard exceeded
OD-SO-B-01	o-Nitrotoluene	<	200	U	µg/kg	NA	410000	NO	NO	No Action: No standard exceeded
OD-SO-B-01	Pentaerythritol Tetranitrate	<	500	U	µg/kg	61300	NA	NO	NO	No Action: No standard exceeded
OD-SO-B-01	p-Nitrotoluene	<	200	U	µg/kg	NA	410000	NO	NO	No Action: No standard exceeded
OD-SO-B-01	RDX	<	200	U	µg/kg	NA	4420	NO	NO	No Action: No standard exceeded
OD-SO-B-01	Tetryl	<	200	U	µg/kg	NA	NA	NO	NO	No Action: No standard exceeded

Exhibit H-1 (Table 3)
Analytical Sample Results

Location	Parameter		Value	Flags	Units	20,000 UTL[1]	NMED SSL[2]	>UTL?	>SSL?	Evaluation
OD-SO-B-02	Antimony	<	2.2	U	mg/kg	3.5279	31.3	NO	NO	No Action: No standard exceeded
OD-SO-B-02	Arsenic		1	B	mg/kg	1.4963	3.9	NO	NO	No Action: No standard exceeded
OD-SO-B-02	Barium		33.7		mg/kg	79.4971	5450	NO	NO	No Action: No standard exceeded
OD-SO-B-02	Beryllium		0.12	B	mg/kg	0.42	156	NO	NO	No Action: No standard exceeded
OD-SO-B-02	Cadmium		0.13	B	mg/kg	0.5417	74.1	NO	NO	No Action: No standard exceeded
OD-SO-B-02	Chromium		2.4		mg/kg	9.5027	234	NO	NO	No Action: No standard exceeded
OD-SO-B-02	Copper		4.2	*	mg/kg	9.1595	3130	NO	NO	No Action: No standard exceeded
OD-SO-B-02	Lead		3		mg/kg	7.6508	400	NO	NO	No Action: No standard exceeded
OD-SO-B-02	Nickel		1.7		mg/kg	6.5898	1560	NO	NO	No Action: No standard exceeded
OD-SO-B-02	Selenium	<	2.2	U	mg/kg	2.2645	391	NO	NO	No Action: No standard exceeded
OD-SO-B-02	Silver	<	0.34	U	mg/kg	0.7328	391	NO	NO	No Action: No standard exceeded
OD-SO-B-02	1,3,5-Trinitrobenzene	<	100	U	µg/kg	NA	NA	NO	NO	No Action: No standard exceeded
OD-SO-B-02	1,3-Dinitrobenzene	<	100	U	µg/kg	NA	NA	NO	NO	No Action: No standard exceeded
OD-SO-B-02	2,4,6-Trinitrotoluene	<	100	U	µg/kg	NA	30000	NO	NO	No Action: No standard exceeded
OD-SO-B-02	2,4-Dinitrotoluene	<	100	U	µg/kg	NA	120000	NO	NO	No Action: No standard exceeded
OD-SO-B-02	2,6-Dinitrotoluene	<	100	U	µg/kg	NA	NA	NO	NO	No Action: No standard exceeded
OD-SO-B-02	2-Amino-4,6-Dinitrotoluene	<	100	U	µg/kg	NA	NA	NO	NO	No Action: No standard exceeded
OD-SO-B-02	4-Amino-2,6-Dinitrotoluene	<	100	U	µg/kg	NA	NA	NO	NO	No Action: No standard exceeded
OD-SO-B-02	HMX		99	J	µg/kg	NA	3000000	NO	NO	No Action: No standard exceeded
OD-SO-B-02	m-Nitrotoluene	<	200	U	µg/kg	NA	410000	NO	NO	No Action: No standard exceeded
OD-SO-B-02	Nitrobenzene	<	100	U	µg/kg	NA	21800	NO	NO	No Action: No standard exceeded
OD-SO-B-02	o-Nitrotoluene	<	200	U	µg/kg	NA	410000	NO	NO	No Action: No standard exceeded
OD-SO-B-02	Pentaerythritol Tetranitrate	<	500	U	µg/kg	61300	NA	NO	NO	No Action: No standard exceeded
OD-SO-B-02	p-Nitrotoluene	<	200	U	µg/kg	NA	410000	NO	NO	No Action: No standard exceeded
OD-SO-B-02	RDX		730		µg/kg	NA	4420	NO	NO	No Action: No standard exceeded
OD-SO-B-02	Tetryl	<	200	U	µg/kg	NA	NA	NO	NO	No Action: No standard exceeded
OD-SO-B-03	Antimony	<	1.9	U	mg/kg	3.5279	31.3	NO	NO	No Action: No standard exceeded
OD-SO-B-03	Arsenic		0.54	B	mg/kg	1.4963	3.9	NO	NO	No Action: No standard exceeded
OD-SO-B-03	Barium		24.3		mg/kg	79.4971	5450	NO	NO	No Action: No standard exceeded
OD-SO-B-03	Beryllium		0.093	B	mg/kg	0.42	156	NO	NO	No Action: No standard exceeded
OD-SO-B-03	Cadmium		0.092	B	mg/kg	0.5417	74.1	NO	NO	No Action: No standard exceeded
OD-SO-B-03	Chromium		3		mg/kg	9.5027	234	NO	NO	No Action: No standard exceeded
OD-SO-B-03	Copper		2.4	*	mg/kg	9.1595	3130	NO	NO	No Action: No standard exceeded
OD-SO-B-03	Lead		1.2		mg/kg	7.6508	400	NO	NO	No Action: No standard exceeded
OD-SO-B-03	Nickel		1		mg/kg	6.5898	1560	NO	NO	No Action: No standard exceeded
OD-SO-B-03	Selenium	<	1.9	U	mg/kg	2.2645	391	NO	NO	No Action: No standard exceeded
OD-SO-B-03	Silver	<	0.28	U	mg/kg	0.7328	391	NO	NO	No Action: No standard exceeded
OD-SO-B-03	1,3,5-Trinitrobenzene	<	100	U	µg/kg	NA	NA	NO	NO	No Action: No standard exceeded
OD-SO-B-03	1,3-Dinitrobenzene	<	100	U	µg/kg	NA	NA	NO	NO	No Action: No standard exceeded

Exhibit H-1 (Table 3)
Analytical Sample Results

Location	Parameter		Value	Flags	Units	20,000 UTL[1]	NMED SSL[2]	>UTL?	>SSL?	Evaluation
OD-SO-B-03	2,4,6-Trinitrotoluene	<	100	U	µg/kg	NA	30000	NO	NO	No Action: No standard exceeded
OD-SO-B-03	2,4-Dinitrotoluene	<	100	U	µg/kg	NA	120000	NO	NO	No Action: No standard exceeded
OD-SO-B-03	2,6-Dinitrotoluene	<	100	U	µg/kg	NA	NA	NO	NO	No Action: No standard exceeded
OD-SO-B-03	2-Amino-4,6-Dinitrotoluene	<	100	U	µg/kg	NA	NA	NO	NO	No Action: No standard exceeded
OD-SO-B-03	4-Amino-2,6-Dinitrotoluene	<	100	U	µg/kg	NA	NA	NO	NO	No Action: No standard exceeded
OD-SO-B-03	HMX	<	200	U	µg/kg	NA	3000000	NO	NO	No Action: No standard exceeded
OD-SO-B-03	m-Nitrotoluene	<	200	U	µg/kg	NA	410000	NO	NO	No Action: No standard exceeded
OD-SO-B-03	Nitrobenzene	<	100	U	µg/kg	NA	21800	NO	NO	No Action: No standard exceeded
OD-SO-B-03	o-Nitrotoluene	<	200	U	µg/kg	NA	410000	NO	NO	No Action: No standard exceeded
OD-SO-B-03	Pentaerythritol Tetranitrate	<	500	U	µg/kg	61300	NA	NO	NO	No Action: No standard exceeded
OD-SO-B-03	p-Nitrotoluene	<	200	U	µg/kg	NA	410000	NO	NO	No Action: No standard exceeded
OD-SO-B-03	RDX	<	200	U	µg/kg	NA	4420	NO	NO	No Action: No standard exceeded
OD-SO-B-03	Tetryl	<	200	U	µg/kg	NA	NA	NO	NO	No Action: No standard exceeded
OD-SO-B-03A	Antimony	<	2	U	mg/kg	3.5279	31.3	NO	NO	No Action: No standard exceeded
OD-SO-B-03A	Arsenic		0.58	B	mg/kg	1.4963	3.9	NO	NO	No Action: No standard exceeded
OD-SO-B-03A	Barium		25.3		mg/kg	79.4971	5450	NO	NO	No Action: No standard exceeded
OD-SO-B-03A	Beryllium		0.083	B	mg/kg	0.42	156	NO	NO	No Action: No standard exceeded
OD-SO-B-03A	Cadmium		0.054	B	mg/kg	0.5417	74.1	NO	NO	No Action: No standard exceeded
OD-SO-B-03A	Chromium		2		mg/kg	9.5027	234	NO	NO	No Action: No standard exceeded
OD-SO-B-03A	Copper		1.4	*	mg/kg	9.1595	3130	NO	NO	No Action: No standard exceeded
OD-SO-B-03A	Lead		0.87	B	mg/kg	7.6508	400	NO	NO	No Action: No standard exceeded
OD-SO-B-03A	Nickel		0.91	B	mg/kg	6.5898	1560	NO	NO	No Action: No standard exceeded
OD-SO-B-03A	Selenium	<	2	U	mg/kg	2.2645	391	NO	NO	No Action: No standard exceeded
OD-SO-B-03A	Silver	<	0.3	U	mg/kg	0.7328	391	NO	NO	No Action: No standard exceeded
OD-SO-B-03A	1,3,5-Trinitrobenzene	<	100	U	µg/kg	NA	NA	NO	NO	No Action: No standard exceeded
OD-SO-B-03A	1,3-Dinitrobenzene	<	100	U	µg/kg	NA	NA	NO	NO	No Action: No standard exceeded
OD-SO-B-03A	2,4,6-Trinitrotoluene	<	100	U	µg/kg	NA	30000	NO	NO	No Action: No standard exceeded
OD-SO-B-03A	2,4-Dinitrotoluene	<	100	U	µg/kg	NA	120000	NO	NO	No Action: No standard exceeded
OD-SO-B-03A	2,6-Dinitrotoluene	<	100	U	µg/kg	NA	NA	NO	NO	No Action: No standard exceeded
OD-SO-B-03A	2-Amino-4,6-Dinitrotoluene	<	100	U	µg/kg	NA	NA	NO	NO	No Action: No standard exceeded
OD-SO-B-03A	4-Amino-2,6-Dinitrotoluene	<	100	U	µg/kg	NA	NA	NO	NO	No Action: No standard exceeded
OD-SO-B-03A	HMX	<	200	U	µg/kg	NA	3000000	NO	NO	No Action: No standard exceeded
OD-SO-B-03A	m-Nitrotoluene	<	200	U	µg/kg	NA	410000	NO	NO	No Action: No standard exceeded
OD-SO-B-03A	Nitrobenzene	<	100	U	µg/kg	NA	21800	NO	NO	No Action: No standard exceeded
OD-SO-B-03A	o-Nitrotoluene	<	200	U	µg/kg	NA	410000	NO	NO	No Action: No standard exceeded
OD-SO-B-03A	Pentaerythritol Tetranitrate	<	500	U	µg/kg	61300	NA	NO	NO	No Action: No standard exceeded
OD-SO-B-03A	p-Nitrotoluene	<	200	U	µg/kg	NA	410000	NO	NO	No Action: No standard exceeded
OD-SO-B-03A	RDX	<	200	U	µg/kg	NA	4420	NO	NO	No Action: No standard exceeded
OD-SO-B-03A	Tetryl	<	200	U	µg/kg	NA	NA	NO	NO	No Action: No standard exceeded

Exhibit H-1 (Table 3)
Analytical Sample Results

Location	Parameter		Value	Flags	Units	20,000 UTL[1]	NMED SSL[2]	>UTL?	>SSL?	Evaluation
OD-SO-B-04	Antimony	<	2	U	mg/kg	3.5279	31.3	NO	NO	No Action: No standard exceeded
OD-SO-B-04	Arsenic		0.96	B	mg/kg	1.4963	3.9	NO	NO	No Action: No standard exceeded
OD-SO-B-04	Barium		40.4		mg/kg	79.4971	5450	NO	NO	No Action: No standard exceeded
OD-SO-B-04	Beryllium		0.19	B	mg/kg	0.42	156	NO	NO	No Action: No standard exceeded
OD-SO-B-04	Cadmium		0.2	B	mg/kg	0.5417	74.1	NO	NO	No Action: No standard exceeded
OD-SO-B-04	Chromium		4.2		mg/kg	9.5027	234	NO	NO	No Action: No standard exceeded
OD-SO-B-04	Copper		4.7	*	mg/kg	9.1595	3130	NO	NO	No Action: No standard exceeded
OD-SO-B-04	Lead		2		mg/kg	7.6508	400	NO	NO	No Action: No standard exceeded
OD-SO-B-04	Nickel		2.2		mg/kg	6.5898	1560	NO	NO	No Action: No standard exceeded
OD-SO-B-04	Selenium	<	2	U	mg/kg	2.2645	391	NO	NO	No Action: No standard exceeded
OD-SO-B-04	Silver	<	0.29	U	mg/kg	0.7328	391	NO	NO	No Action: No standard exceeded
OD-SO-B-04	1,3,5-Trinitrobenzene	<	100	U	µg/kg	NA	NA	NO	NO	No Action: No standard exceeded
OD-SO-B-04	1,3-Dinitrobenzene	<	100	U	µg/kg	NA	NA	NO	NO	No Action: No standard exceeded
OD-SO-B-04	2,4,6-Trinitrotoluene	<	100	U	µg/kg	NA	30000	NO	NO	No Action: No standard exceeded
OD-SO-B-04	2,4-Dinitrotoluene	<	100	U	µg/kg	NA	120000	NO	NO	No Action: No standard exceeded
OD-SO-B-04	2,6-Dinitrotoluene	<	100	U	µg/kg	NA	NA	NO	NO	No Action: No standard exceeded
OD-SO-B-04	2-Amino-4,6-Dinitrotoluene	<	100	U	µg/kg	NA	NA	NO	NO	No Action: No standard exceeded
OD-SO-B-04	4-Amino-2,6-Dinitrotoluene	<	100	U	µg/kg	NA	NA	NO	NO	No Action: No standard exceeded
OD-SO-B-04	HMX	<	200	U	µg/kg	NA	3000000	NO	NO	No Action: No standard exceeded
OD-SO-B-04	m-Nitrotoluene	<	200	U	µg/kg	NA	410000	NO	NO	No Action: No standard exceeded
OD-SO-B-04	Nitrobenzene		86	J	µg/kg	NA	21800	NO	NO	No Action: No standard exceeded
OD-SO-B-04	o-Nitrotoluene	<	200	U	µg/kg	NA	410000	NO	NO	No Action: No standard exceeded
OD-SO-B-04	Pentaerythritol Tetranitrate	<	500	U	µg/kg	61300	NA	NO	NO	No Action: No standard exceeded
OD-SO-B-04	p-Nitrotoluene	<	200	U	µg/kg	NA	410000	NO	NO	No Action: No standard exceeded
OD-SO-B-04	RDX	<	200	U	µg/kg	NA	4420	NO	NO	No Action: No standard exceeded
OD-SO-B-04	Tetryl	<	200	U	µg/kg	NA	NA	NO	NO	No Action: No standard exceeded
OD-SO-C-01	Antimony		0.37	B	mg/kg	3.5279	31.3	NO	NO	No Action: No standard exceeded
OD-SO-C-01	Arsenic		0.85	B	mg/kg	1.4963	3.9	NO	NO	No Action: No standard exceeded
OD-SO-C-01	Barium		43.8		mg/kg	79.4971	5450	NO	NO	No Action: No standard exceeded
OD-SO-C-01	Beryllium		0.19	B	mg/kg	0.42	156	NO	NO	No Action: No standard exceeded
OD-SO-C-01	Cadmium		0.34	B	mg/kg	0.5417	74.1	NO	NO	No Action: No standard exceeded
OD-SO-C-01	Chromium		4		mg/kg	9.5027	234	NO	NO	No Action: No standard exceeded
OD-SO-C-01	Copper		7.2	*	mg/kg	9.1595	3130	NO	NO	No Action: No standard exceeded
OD-SO-C-01	Lead		4.5		mg/kg	7.6508	400	NO	NO	No Action: No standard exceeded
OD-SO-C-01	Nickel		2.8		mg/kg	6.5898	1560	NO	NO	No Action: No standard exceeded
OD-SO-C-01	Selenium	<	2.1	U	mg/kg	2.2645	391	NO	NO	No Action: No standard exceeded
OD-SO-C-01	Silver	<	0.31	U	mg/kg	0.7328	391	NO	NO	No Action: No standard exceeded
OD-SO-C-01	1,3,5-Trinitrobenzene	<	100	U	µg/kg	NA	NA	NO	NO	No Action: No standard exceeded
OD-SO-C-01	1,3-Dinitrobenzene	<	100	U	µg/kg	NA	NA	NO	NO	No Action: No standard exceeded

Exhibit H-1 (Table 3)
Analytical Sample Results

Location	Parameter		Value	Flags	Units	20,000 UTL[1]	NMED SSL[2]	>UTL?	>SSL?	Evaluation
OD-SO-C-01	2,4,6-Trinitrotoluene	<	100	U	µg/kg	NA	30000	NO	NO	No Action: No standard exceeded
OD-SO-C-01	2,4-Dinitrotoluene	<	100	U	µg/kg	NA	120000	NO	NO	No Action: No standard exceeded
OD-SO-C-01	2,6-Dinitrotoluene	<	100	U	µg/kg	NA	NA	NO	NO	No Action: No standard exceeded
OD-SO-C-01	2-Amino-4,6-Dinitrotoluene	<	100	U	µg/kg	NA	NA	NO	NO	No Action: No standard exceeded
OD-SO-C-01	4-Amino-2,6-Dinitrotoluene	<	100	U	µg/kg	NA	NA	NO	NO	No Action: No standard exceeded
OD-SO-C-01	HMX	<	200	U	µg/kg	NA	3000000	NO	NO	No Action: No standard exceeded
OD-SO-C-01	m-Nitrotoluene	<	200	U	µg/kg	NA	410000	NO	NO	No Action: No standard exceeded
OD-SO-C-01	Nitrobenzene	<	100	U	µg/kg	NA	21800	NO	NO	No Action: No standard exceeded
OD-SO-C-01	o-Nitrotoluene	<	200	U	µg/kg	NA	410000	NO	NO	No Action: No standard exceeded
OD-SO-C-01	Pentaerythritol Tetranitrate	<	500	U	µg/kg	61300	NA	NO	NO	No Action: No standard exceeded
OD-SO-C-01	p-Nitrotoluene	<	200	U	µg/kg	NA	410000	NO	NO	No Action: No standard exceeded
OD-SO-C-01	RDX	<	200	U	µg/kg	NA	4420	NO	NO	No Action: No standard exceeded
OD-SO-C-01	Tetryl	<	200	U	µg/kg	NA	NA	NO	NO	No Action: No standard exceeded
OD-SO-C-02	Antimony	<	2	U	mg/kg	3.5279	31.3	NO	NO	No Action: No standard exceeded
OD-SO-C-02	Arsenic		1.1	B	mg/kg	1.4963	3.9	NO	NO	No Action: No standard exceeded
OD-SO-C-02	Barium		49.2		mg/kg	79.4971	5450	NO	NO	No Action: No standard exceeded
OD-SO-C-02	Beryllium		0.23		mg/kg	0.42	156	NO	NO	No Action: No standard exceeded
OD-SO-C-02	Cadmium		0.21	B	mg/kg	0.5417	74.1	NO	NO	No Action: No standard exceeded
OD-SO-C-02	Chromium		4.5		mg/kg	9.5027	234	NO	NO	No Action: No standard exceeded
OD-SO-C-02	Lead		3.2		mg/kg	7.6508	400	NO	NO	No Action: No standard exceeded
OD-SO-C-02	Nickel		2.9		mg/kg	6.5898	1560	NO	NO	No Action: No standard exceeded
OD-SO-C-02	Selenium	<	2	U	mg/kg	2.2645	391	NO	NO	No Action: No standard exceeded
OD-SO-C-02	Silver	<	0.29	U	mg/kg	0.7328	391	NO	NO	No Action: No standard exceeded
OD-SO-C-02	Mercury		0.02	B	mg/kg	0.0269	6.11	NO	NO	No Action: No standard exceeded
OD-SO-C-02	1,3,5-Trinitrobenzene	<	100	U	µg/kg	NA	NA	NO	NO	No Action: No standard exceeded
OD-SO-C-02	1,3-Dinitrobenzene	<	100	U	µg/kg	NA	NA	NO	NO	No Action: No standard exceeded
OD-SO-C-02	2,4,6-Trinitrotoluene	<	100	U	µg/kg	NA	30000	NO	NO	No Action: No standard exceeded
OD-SO-C-02	2,4-Dinitrotoluene	<	100	U	µg/kg	NA	120000	NO	NO	No Action: No standard exceeded
OD-SO-C-02	2,6-Dinitrotoluene	<	100	U	µg/kg	NA	NA	NO	NO	No Action: No standard exceeded
OD-SO-C-02	2-Amino-4,6-Dinitrotoluene	<	100	U	µg/kg	NA	NA	NO	NO	No Action: No standard exceeded
OD-SO-C-02	4-Amino-2,6-Dinitrotoluene	<	100	U	µg/kg	NA	NA	NO	NO	No Action: No standard exceeded
OD-SO-C-02	HMX	<	200	U	µg/kg	NA	3000000	NO	NO	No Action: No standard exceeded
OD-SO-C-02	m-Nitrotoluene	<	200	U	µg/kg	NA	410000	NO	NO	No Action: No standard exceeded
OD-SO-C-02	Nitrobenzene		65	J	µg/kg	NA	21800	NO	NO	No Action: No standard exceeded
OD-SO-C-02	o-Nitrotoluene	<	200	U	µg/kg	NA	410000	NO	NO	No Action: No standard exceeded
OD-SO-C-02	Pentaerythritol Tetranitrate	<	500	U	µg/kg	61300	NA	NO	NO	No Action: No standard exceeded
OD-SO-C-02	p-Nitrotoluene	<	200	U	µg/kg	NA	410000	NO	NO	No Action: No standard exceeded
OD-SO-C-02	RDX	<	200	U	µg/kg	NA	4420	NO	NO	No Action: No standard exceeded
OD-SO-C-02	Tetryl	<	200	U	µg/kg	NA	NA	NO	NO	No Action: No standard exceeded

Exhibit H-1 (Table 3)
Analytical Sample Results

Location	Parameter		Value	Flags	Units	20,000 UTL[1]	NMED SSL[2]	>UTL?	>SSL?	Evaluation
OD-SO-C-03	Antimony	<	2	U	mg/kg	3.5279	31.3	NO	NO	No Action: No standard exceeded
OD-SO-C-03	Arsenic		0.96	B	mg/kg	1.4963	3.9	NO	NO	No Action: No standard exceeded
OD-SO-C-03	Barium		37.4		mg/kg	79.4971	5450	NO	NO	No Action: No standard exceeded
OD-SO-C-03	Beryllium		0.14	B	mg/kg	0.42	156	NO	NO	No Action: No standard exceeded
OD-SO-C-03	Cadmium		0.24	B	mg/kg	0.5417	74.1	NO	NO	No Action: No standard exceeded
OD-SO-C-03	Chromium		3.1		mg/kg	9.5027	234	NO	NO	No Action: No standard exceeded
OD-SO-C-03	Copper		4	*	mg/kg	9.1595	3130	NO	NO	No Action: No standard exceeded
OD-SO-C-03	Lead		2.1		mg/kg	7.6508	400	NO	NO	No Action: No standard exceeded
OD-SO-C-03	Nickel		1.9		mg/kg	6.5898	1560	NO	NO	No Action: No standard exceeded
OD-SO-C-03	Selenium	<	2	U	mg/kg	2.2645	391	NO	NO	No Action: No standard exceeded
OD-SO-C-03	Silver	<	0.31	U	mg/kg	0.7328	391	NO	NO	No Action: No standard exceeded
OD-SO-C-03	1,3,5-Trinitrobenzene	<	100	U	µg/kg	NA	NA	NO	NO	No Action: No standard exceeded
OD-SO-C-03	1,3-Dinitrobenzene	<	100	U	µg/kg	NA	NA	NO	NO	No Action: No standard exceeded
OD-SO-C-03	2,4,6-Trinitrotoluene	<	100	U	µg/kg	NA	30000	NO	NO	No Action: No standard exceeded
OD-SO-C-03	2,4-Dinitrotoluene	<	100	U	µg/kg	NA	120000	NO	NO	No Action: No standard exceeded
OD-SO-C-03	2,6-Dinitrotoluene	<	100	U	µg/kg	NA	NA	NO	NO	No Action: No standard exceeded
OD-SO-C-03	2-Amino-4,6-Dinitrotoluene	<	100	U	µg/kg	NA	NA	NO	NO	No Action: No standard exceeded
OD-SO-C-03	4-Amino-2,6-Dinitrotoluene	<	100	U	µg/kg	NA	NA	NO	NO	No Action: No standard exceeded
OD-SO-C-03	HMX	<	200	U	µg/kg	NA	3000000	NO	NO	No Action: No standard exceeded
OD-SO-C-03	m-Nitrotoluene	<	200	U	µg/kg	NA	410000	NO	NO	No Action: No standard exceeded
OD-SO-C-03	Nitrobenzene	<	100	U	µg/kg	NA	21800	NO	NO	No Action: No standard exceeded
OD-SO-C-03	o-Nitrotoluene	<	200	U	µg/kg	NA	410000	NO	NO	No Action: No standard exceeded
OD-SO-C-03	Pentaerythritol Tetranitrate	<	500	U	µg/kg	61300	NA	NO	NO	No Action: No standard exceeded
OD-SO-C-03	p-Nitrotoluene	<	200	U	µg/kg	NA	410000	NO	NO	No Action: No standard exceeded
OD-SO-C-03	RDX	<	200	U	µg/kg	NA	4420	NO	NO	No Action: No standard exceeded
OD-SO-C-03	Tetryl	<	200	U	µg/kg	NA	NA	NO	NO	No Action: No standard exceeded
OD-SO-C-04	Antimony	<	1.9	U	mg/kg	3.5279	31.3	NO	NO	No Action: No standard exceeded
OD-SO-C-04	Arsenic		1.3	B	mg/kg	1.4963	3.9	NO	NO	No Action: No standard exceeded
OD-SO-C-04	Barium		45.5		mg/kg	79.4971	5450	NO	NO	No Action: No standard exceeded
OD-SO-C-04	Beryllium		0.18	B	mg/kg	0.42	156	NO	NO	No Action: No standard exceeded
OD-SO-C-04	Cadmium		0.19	B	mg/kg	0.5417	74.1	NO	NO	No Action: No standard exceeded
OD-SO-C-04	Chromium		4.5		mg/kg	9.5027	234	NO	NO	No Action: No standard exceeded
OD-SO-C-04	Copper		5.2	*	mg/kg	9.1595	3130	NO	NO	No Action: No standard exceeded
OD-SO-C-04	Lead		2.6		mg/kg	7.6508	400	NO	NO	No Action: No standard exceeded
OD-SO-C-04	Nickel		2.6		mg/kg	6.5898	1560	NO	NO	No Action: No standard exceeded
OD-SO-C-04	Selenium	<	1.9	U	mg/kg	2.2645	391	NO	NO	No Action: No standard exceeded
OD-SO-C-04	Silver	<	0.29	U	mg/kg	0.7328	391	NO	NO	No Action: No standard exceeded
OD-SO-C-04	1,3,5-Trinitrobenzene	<	100	U	µg/kg	NA	NA	NO	NO	No Action: No standard exceeded
OD-SO-C-04	1,3-Dinitrobenzene	<	100	U	µg/kg	NA	NA	NO	NO	No Action: No standard exceeded

Exhibit H-1 (Table 3)
Analytical Sample Results

Location	Parameter		Value	Flags	Units	20,000 UTL[1]	NMED SSL[2]	>UTL?	>SSL?	Evaluation
OD-SO-C-04	2,4,6-Trinitrotoluene	<	100	U	µg/kg	NA	30000	NO	NO	No Action: No standard exceeded
OD-SO-C-04	2,4-Dinitrotoluene	<	100	U	µg/kg	NA	120000	NO	NO	No Action: No standard exceeded
OD-SO-C-04	2,6-Dinitrotoluene	<	100	U	µg/kg	NA	NA	NO	NO	No Action: No standard exceeded
OD-SO-C-04	2-Amino-4,6-Dinitrotoluene	<	100	U	µg/kg	NA	NA	NO	NO	No Action: No standard exceeded
OD-SO-C-04	4-Amino-2,6-Dinitrotoluene	<	100	U	µg/kg	NA	NA	NO	NO	No Action: No standard exceeded
OD-SO-C-04	HMX	<	200	U	µg/kg	NA	3000000	NO	NO	No Action: No standard exceeded
OD-SO-C-04	m-Nitrotoluene	<	200	U	µg/kg	NA	410000	NO	NO	No Action: No standard exceeded
OD-SO-C-04	Nitrobenzene	<	100	U	µg/kg	NA	21800	NO	NO	No Action: No standard exceeded
OD-SO-C-04	o-Nitrotoluene	<	200	U	µg/kg	NA	410000	NO	NO	No Action: No standard exceeded
OD-SO-C-04	Pentaerythritol Tetranitrate	<	500	U	µg/kg	61300	NA	NO	NO	No Action: No standard exceeded
OD-SO-C-04	p-Nitrotoluene	<	200	U	µg/kg	NA	410000	NO	NO	No Action: No standard exceeded
OD-SO-C-04	RDX	<	200	U	µg/kg	NA	4420	NO	NO	No Action: No standard exceeded
OD-SO-C-04	Tetryl	<	200	U	µg/kg	NA	NA	NO	NO	No Action: No standard exceeded
[1] 20,000 UTL:	Final Background Study, 20000-Pound Open Detonation Unit, December 1997									
[2] NMED SSL:	New Mexico Environment Department Soil Screening Levels, February 2004, Revision 2									

Exhibit H-1 (Table 4)
Analytical Sample Results

Location	Parameter		Value	Flags	Units	20,000 UTL[1]	NMED SSL[2]	>UTL?	>SSL?	Evaluation
OD-SO-A-01	Mercury	<	0.033	U	mg/kg	0.0269	6.11	YES	NO	No Action: result flagged "U"
OD-SO-A-01	Nitroglycerine	<	5,900	U	µg/kg	93.6772	347000	YES	NO	No Action: result flagged "U"
OD-SO-A-02	Cadmium		2.2		mg/kg	0.5417	74.1	YES	NO	No Action:UTL exceeded but not SSL
OD-SO-A-02	Copper		98.3		mg/kg	9.1595	3130	YES	NO	No Action:UTL exceeded but not SSL
OD-SO-A-02	Lead		9		mg/kg	7.6508	400	YES	NO	No Action:UTL exceeded but not SSL
OD-SO-A-02	Silver		2.1		mg/kg	0.7328	391	YES	NO	No Action:UTL exceeded but not SSL
OD-SO-A-02	Mercury	<	0.036	U	mg/kg	0.0269	6.11	YES	NO	No Action: result flagged "U"
OD-SO-A-02	Nitroglycerine	<	5,700	U	µg/kg	93.6772	347000	YES	NO	No Action: result flagged "U"
OD-SO-A-03	Chromium		15.9		mg/kg	9.5027	234	YES	NO	No Action:UTL exceeded but not SSL
OD-SO-A-03	Copper		17.7		mg/kg	9.1595	3130	YES	NO	No Action:UTL exceeded but not SSL
OD-SO-A-03	Lead		8.4		mg/kg	7.6508	400	YES	NO	No Action:UTL exceeded but not SSL
OD-SO-A-03	Nickel		9.7	E	mg/kg	6.5898	1560	YES	NO	No Action:UTL exceeded but not SSL
OD-SO-A-03	Mercury	<	0.033	U	mg/kg	0.0269	6.11	YES	NO	No Action: result flagged "U"
OD-SO-A-03	Nitroglycerine	<	5,800	U	µg/kg	93.6772	347000	YES	NO	No Action: result flagged "U"
OD-SO-A-04	Arsenic		1.7	B	mg/kg	1.4963	3.9	YES	NO	No Action:UTL exceeded but not SSL
OD-SO-A-04	Cadmium		1.1		mg/kg	0.5417	74.1	YES	NO	No Action:UTL exceeded but not SSL
OD-SO-A-04	Chromium		12.8		mg/kg	9.5027	234	YES	NO	No Action:UTL exceeded but not SSL
OD-SO-A-04	Copper		52.1		mg/kg	9.1595	3130	YES	NO	No Action:UTL exceeded but not SSL
OD-SO-A-04	Lead		12		mg/kg	7.6508	400	YES	NO	No Action:UTL exceeded but not SSL
OD-SO-A-04	Silver		0.75		mg/kg	0.7328	391	YES	NO	No Action:UTL exceeded but not SSL
OD-SO-A-04	Mercury	<	0.034	U	mg/kg	0.0269	6.11	YES	NO	No Action: result flagged "U"
OD-SO-A-04	Nitroglycerine	<	5,900	U	µg/kg	93.6772	347000	YES	NO	No Action: result flagged "U"
OD-SO-B-01	Lead		7.8		mg/kg	7.6508	400	YES	NO	No Action:UTL exceeded but not SSL
OD-SO-B-01	Mercury	<	0.031	U	mg/kg	0.0269	6.11	YES	NO	No Action: result flagged "U"
OD-SO-B-01	Nitroglycerine	<	6,000	U	µg/kg	93.6772	347000	YES	NO	No Action: result flagged "U"
OD-SO-B-02	Selenium	<	2.3	U	mg/kg	2.2645	391	YES	NO	No Action: result flagged "U"
OD-SO-B-02	Mercury	<	0.035	U	mg/kg	0.0269	6.11	YES	NO	No Action: result flagged "U"
OD-SO-B-02	Nitroglycerine	<	6,400	U	µg/kg	93.6772	347000	YES	NO	No Action: result flagged "U"
OD-SO-B-03	Mercury	<	0.034	U	mg/kg	0.0269	6.11	YES	NO	No Action: result flagged "U"
OD-SO-B-03	Nitroglycerine	<	5,900	U	µg/kg	93.6772	347000	YES	NO	No Action: result flagged "U"
OD-SO-B-04	Mercury	<	0.033	U	mg/kg	0.0269	6.11	YES	NO	No Action: result flagged "U"
OD-SO-B-04	Nitroglycerine	<	6,300	U	µg/kg	93.6772	347000	YES	NO	No Action: result flagged "U"
OD-SO-C-01	Arsenic		2.3		mg/kg	1.4963	3.9	YES	NO	No Action:UTL exceeded but not SSL
OD-SO-C-01	Beryllium		0.43		mg/kg	0.42	156	YES	NO	No Action:UTL exceeded but not SSL
OD-SO-C-01	Cadmium		1.2		mg/kg	0.5417	74.1	YES	NO	No Action:UTL exceeded but not SSL
OD-SO-C-01	Copper		18.9		mg/kg	9.1595	3130	YES	NO	No Action:UTL exceeded but not SSL
OD-SO-C-01	Lead		15.1		mg/kg	7.6508	400	YES	NO	No Action:UTL exceeded but not SSL
OD-SO-C-01	Mercury	<	0.033	U	mg/kg	0.0269	6.11	YES	NO	No Action: result flagged "U"

Exhibit H-1 (Table 4)
Analytical Sample Results

Location	Parameter		Value	Flags	Units	20,000 UTL[1]	NMED SSL[2]	>UTL?	>SSL?	Evaluation
OD-SO-C-01	Nitroglycerine	<	6,100	U	µg/kg	93.6772	347000	YES	NO	No Action: result flagged "U"
OD-SO-C-02	Mercury	<	0.028	U	mg/kg	0.0269	6.11	YES	NO	No Action: result flagged "U"
OD-SO-C-02	Nitroglycerine	<	6,200	U	µg/kg	93.6772	347000	YES	NO	No Action: result flagged "U"
OD-SO-C-03	Mercury	<	0.031	U	mg/kg	0.0269	6.11	YES	NO	No Action: result flagged "U"
OD-SO-C-03	Nitroglycerine	<	5,400	U	µg/kg	93.6772	347000	YES	NO	No Action: result flagged "U"
OD-SO-C-04	Mercury	<	0.033	U	mg/kg	0.0269	6.11	YES	NO	No Action: result flagged "U"
OD-SO-C-04	Nitroglycerine	<	5,800	U	µg/kg	93.6772	347000	YES	NO	No Action: result flagged "U"
OD-SO-C-04A	Mercury	<	0.03	U	mg/kg	0.0269	6.11	YES	NO	No Action: result flagged "U"
OD-SO-C-04A	Nitroglycerine	<	5,800	U	µg/kg	93.6772	347000	YES	NO	No Action: result flagged "U"
OD-SO-A-01	Antimony	<	2.1	UN	mg/kg	3.5279	31.3	NO	NO	No Action: No standard exceeded
OD-SO-A-01	Arsenic		0.76	B	mg/kg	1.4963	3.9	NO	NO	No Action: No standard exceeded
OD-SO-A-01	Barium		30.7		mg/kg	79.4971	5450	NO	NO	No Action: No standard exceeded
OD-SO-A-01	Beryllium		0.13	B	mg/kg	0.42	156	NO	NO	No Action: No standard exceeded
OD-SO-A-01	Cadmium		0.13	B	mg/kg	0.5417	74.1	NO	NO	No Action: No standard exceeded
OD-SO-A-01	Chromium		3.4		mg/kg	9.5027	234	NO	NO	No Action: No standard exceeded
OD-SO-A-01	Copper		8.1		mg/kg	9.1595	3130	NO	NO	No Action: No standard exceeded
OD-SO-A-01	Lead		2.5		mg/kg	7.6508	400	NO	NO	No Action: No standard exceeded
OD-SO-A-01	Nickel		1.9	E	mg/kg	6.5898	1560	NO	NO	No Action: No standard exceeded
OD-SO-A-01	Selenium	<	2.1	U	mg/kg	2.2645	391	NO	NO	No Action: No standard exceeded
OD-SO-A-01	Silver	<	0.32	U	mg/kg	0.7328	391	NO	NO	No Action: No standard exceeded
OD-SO-A-01	1,3,5-Trinitrobenzene	<	100	U	µg/kg	NA	NA	NO	NO	No Action: No standard exceeded
OD-SO-A-01	1,3-Dinitrobenzene	<	100	U	µg/kg	NA	NA	NO	NO	No Action: No standard exceeded
OD-SO-A-01	2,4-Dinitrotoluene	<	100	U	µg/kg	NA	120000	NO	NO	No Action: No standard exceeded
OD-SO-A-01	2,6-Dinitrotoluene	<	100	U	µg/kg	NA	NA	NO	NO	No Action: No standard exceeded
OD-SO-A-01	2-Amino-4,6-dinitrotoluene	<	100	U	µg/kg	NA	NA	NO	NO	No Action: No standard exceeded
OD-SO-A-01	4-Amino-2,6-dinitrotoluene	<	100	U	µg/kg	NA	NA	NO	NO	No Action: No standard exceeded
OD-SO-A-01	HMX	<	200	U	µg/kg	NA	3000000	NO	NO	No Action: No standard exceeded
OD-SO-A-01	m-Nitrotoluene	<	200	U	µg/kg	NA	410000	NO	NO	No Action: No standard exceeded
OD-SO-A-01	Nitrobenzene		140		µg/kg	NA	21800	NO	NO	No Action: No standard exceeded
OD-SO-A-01	o-Nitrotoluene	<	200	U	µg/kg	NA	410000	NO	NO	No Action: No standard exceeded
OD-SO-A-01	PETN	<	500	U	µg/kg	61300	NA	NO	NO	No Action: No standard exceeded
OD-SO-A-01	p-Nitrotoluene	<	200	U	µg/kg	NA	410000	NO	NO	No Action: No standard exceeded
OD-SO-A-01	RDX	<	200	U	µg/kg	NA	4420	NO	NO	No Action: No standard exceeded
OD-SO-A-01	Tetryl	<	200	U	µg/kg	NA	NA	NO	NO	No Action: No standard exceeded
OD-SO-A-01	TNT	<	100	U	µg/kg	NA	30000	NO	NO	No Action: No standard exceeded
OD-SO-A-02	Antimony	<	2	UN	mg/kg	3.5279	31.3	NO	NO	No Action: No standard exceeded
OD-SO-A-02	Arsenic		1	B	mg/kg	1.4963	3.9	NO	NO	No Action: No standard exceeded
OD-SO-A-02	Barium		49.3		mg/kg	79.4971	5450	NO	NO	No Action: No standard exceeded

Exhibit H-1 (Table 4)
Analytical Sample Results

Location	Parameter		Value	Flags	Units	20,000 UTL[1]	NMED SSL[2]	>UTL?	>SSL?	Evaluation
OD-SO-A-02	Beryllium		0.23		mg/kg	0.42	156	NO	NO	No Action: No standard exceeded
OD-SO-A-02	Chromium		8.1		mg/kg	9.5027	234	NO	NO	No Action: No standard exceeded
OD-SO-A-02	Nickel		4.3	E	mg/kg	6.5898	1560	NO	NO	No Action: No standard exceeded
OD-SO-A-02	Selenium	<	2	U	mg/kg	2.2645	391	NO	NO	No Action: No standard exceeded
OD-SO-A-02	1,3,5-Trinitrobenzene	<	100	U	µg/kg	NA	NA	NO	NO	No Action: No standard exceeded
OD-SO-A-02	1,3-Dinitrobenzene	<	100	U	µg/kg	NA	NA	NO	NO	No Action: No standard exceeded
OD-SO-A-02	2,4-Dinitrotoluene	<	100	U	µg/kg	NA	120000	NO	NO	No Action: No standard exceeded
OD-SO-A-02	2,6-Dinitrotoluene	<	100	U	µg/kg	NA	NA	NO	NO	No Action: No standard exceeded
OD-SO-A-02	2-Amino-4,6-dinitrotoluene	<	100	U	µg/kg	NA	NA	NO	NO	No Action: No standard exceeded
OD-SO-A-02	4-Amino-2,6-dinitrotoluene	<	100	U	µg/kg	NA	NA	NO	NO	No Action: No standard exceeded
OD-SO-A-02	HMX	<	200	U	µg/kg	NA	3000000	NO	NO	No Action: No standard exceeded
OD-SO-A-02	m-Nitrotoluene	<	200	U	µg/kg	NA	410000	NO	NO	No Action: No standard exceeded
OD-SO-A-02	Nitrobenzene	<	100	U	µg/kg	NA	21800	NO	NO	No Action: No standard exceeded
OD-SO-A-02	o-Nitrotoluene	<	200	U	µg/kg	NA	410000	NO	NO	No Action: No standard exceeded
OD-SO-A-02	PETN	<	500	U	µg/kg	61300	NA	NO	NO	No Action: No standard exceeded
OD-SO-A-02	p-Nitrotoluene	<	200	U	µg/kg	NA	410000	NO	NO	No Action: No standard exceeded
OD-SO-A-02	RDX	<	200	U	µg/kg	NA	4420	NO	NO	No Action: No standard exceeded
OD-SO-A-02	Tetryl	<	200	U	µg/kg	NA	NA	NO	NO	No Action: No standard exceeded
OD-SO-A-02	TNT	<	100	U	µg/kg	NA	30000	NO	NO	No Action: No standard exceeded
OD-SO-A-03	Antimony		0.35	BN	mg/kg	3.5279	31.3	NO	NO	No Action: No standard exceeded
OD-SO-A-03	Arsenic		1.3	B	mg/kg	1.4963	3.9	NO	NO	No Action: No standard exceeded
OD-SO-A-03	Barium		64.8		mg/kg	79.4971	5450	NO	NO	No Action: No standard exceeded
OD-SO-A-03	Beryllium		0.39		mg/kg	0.42	156	NO	NO	No Action: No standard exceeded
OD-SO-A-03	Cadmium		0.28	B	mg/kg	0.5417	74.1	NO	NO	No Action: No standard exceeded
OD-SO-A-03	Selenium	<	2	U	mg/kg	2.2645	391	NO	NO	No Action: No standard exceeded
OD-SO-A-03	Silver	<	0.3	U	mg/kg	0.7328	391	NO	NO	No Action: No standard exceeded
OD-SO-A-03	1,3,5-Trinitrobenzene	<	100	U	µg/kg	NA	NA	NO	NO	No Action: No standard exceeded
OD-SO-A-03	1,3-Dinitrobenzene	<	100	U	µg/kg	NA	NA	NO	NO	No Action: No standard exceeded
OD-SO-A-03	2,4-Dinitrotoluene	<	100	U	µg/kg	NA	120000	NO	NO	No Action: No standard exceeded
OD-SO-A-03	2,6-Dinitrotoluene	<	100	U	µg/kg	NA	NA	NO	NO	No Action: No standard exceeded
OD-SO-A-03	2-Amino-4,6-dinitrotoluene	<	100	U	µg/kg	NA	NA	NO	NO	No Action: No standard exceeded
OD-SO-A-03	4-Amino-2,6-dinitrotoluene	<	100	U	µg/kg	NA	NA	NO	NO	No Action: No standard exceeded
OD-SO-A-03	HMX	<	200	U	µg/kg	NA	3000000	NO	NO	No Action: No standard exceeded
OD-SO-A-03	m-Nitrotoluene	<	200	U	µg/kg	NA	410000	NO	NO	No Action: No standard exceeded
OD-SO-A-03	Nitrobenzene	<	100	U	µg/kg	NA	21800	NO	NO	No Action: No standard exceeded
OD-SO-A-03	o-Nitrotoluene	<	200	U	µg/kg	NA	410000	NO	NO	No Action: No standard exceeded
OD-SO-A-03	PETN	<	500	U	µg/kg	61300	NA	NO	NO	No Action: No standard exceeded
OD-SO-A-03	p-Nitrotoluene	<	200	U	µg/kg	NA	410000	NO	NO	No Action: No standard exceeded

Exhibit H-1 (Table 4)
Analytical Sample Results

Location	Parameter		Value	Flags	Units	20,000 UTL[1]	NMED SSL[2]	>UTL?	>SSL?	Evaluation
OD-SO-A-03	RDX	<	200	U	µg/kg	NA	4420	NO	NO	No Action: No standard exceeded
OD-SO-A-03	Tetryl	<	200	U	µg/kg	NA	NA	NO	NO	No Action: No standard exceeded
OD-SO-A-03	TNT	<	100	U	µg/kg	NA	30000	NO	NO	No Action: No standard exceeded
OD-SO-A-04	Antimony	<	2	UN	mg/kg	3.5279	31.3	NO	NO	No Action: No standard exceeded
OD-SO-A-04	Barium		56.1		mg/kg	79.4971	5450	NO	NO	No Action: No standard exceeded
OD-SO-A-04	Beryllium		0.33		mg/kg	0.42	156	NO	NO	No Action: No standard exceeded
OD-SO-A-04	Nickel		5.6	E	mg/kg	6.5898	1560	NO	NO	No Action: No standard exceeded
OD-SO-A-04	Selenium	<	2	U	mg/kg	2.2645	391	NO	NO	No Action: No standard exceeded
OD-SO-A-04	1,3,5-Trinitrobenzene	<	100	U	µg/kg	NA	NA	NO	NO	No Action: No standard exceeded
OD-SO-A-04	1,3-Dinitrobenzene	<	100	U	µg/kg	NA	NA	NO	NO	No Action: No standard exceeded
OD-SO-A-04	2,4-Dinitrotoluene	<	100	U	µg/kg	NA	120000	NO	NO	No Action: No standard exceeded
OD-SO-A-04	2,6-Dinitrotoluene	<	100	U	µg/kg	NA	NA	NO	NO	No Action: No standard exceeded
OD-SO-A-04	2-Amino-4,6-dinitrotoluene	<	100	U	µg/kg	NA	NA	NO	NO	No Action: No standard exceeded
OD-SO-A-04	4-Amino-2,6-dinitrotoluene	<	100	U	µg/kg	NA	NA	NO	NO	No Action: No standard exceeded
OD-SO-A-04	HMX	<	200	U	µg/kg	NA	3000000	NO	NO	No Action: No standard exceeded
OD-SO-A-04	m-Nitrotoluene	<	200	U	µg/kg	NA	410000	NO	NO	No Action: No standard exceeded
OD-SO-A-04	Nitrobenzene	<	100	U	µg/kg	NA	21800	NO	NO	No Action: No standard exceeded
OD-SO-A-04	o-Nitrotoluene	<	200	U	µg/kg	NA	410000	NO	NO	No Action: No standard exceeded
OD-SO-A-04	PETN	<	500	U	µg/kg	61300	NA	NO	NO	No Action: No standard exceeded
OD-SO-A-04	p-Nitrotoluene	<	200	U	µg/kg	NA	410000	NO	NO	No Action: No standard exceeded
OD-SO-A-04	RDX	<	200	U	µg/kg	NA	4420	NO	NO	No Action: No standard exceeded
OD-SO-A-04	Tetryl	<	200	U	µg/kg	NA	NA	NO	NO	No Action: No standard exceeded
OD-SO-A-04	TNT	<	100	U	µg/kg	NA	30000	NO	NO	No Action: No standard exceeded
OD-SO-B-01	Antimony	<	2.1	UN	mg/kg	3.5279	31.3	NO	NO	No Action: No standard exceeded
OD-SO-B-01	Arsenic		0.66	B	mg/kg	1.4963	3.9	NO	NO	No Action: No standard exceeded
OD-SO-B-01	Barium		29		mg/kg	79.4971	5450	NO	NO	No Action: No standard exceeded
OD-SO-B-01	Beryllium		0.1	B	mg/kg	0.42	156	NO	NO	No Action: No standard exceeded
OD-SO-B-01	Cadmium		0.043	B	mg/kg	0.5417	74.1	NO	NO	No Action: No standard exceeded
OD-SO-B-01	Chromium		2.7		mg/kg	9.5027	234	NO	NO	No Action: No standard exceeded
OD-SO-B-01	Copper		5.3		mg/kg	9.1595	3130	NO	NO	No Action: No standard exceeded
OD-SO-B-01	Nickel		2.5	E	mg/kg	6.5898	1560	NO	NO	No Action: No standard exceeded
OD-SO-B-01	Selenium	<	2.1	U	mg/kg	2.2645	391	NO	NO	No Action: No standard exceeded
OD-SO-B-01	Silver	<	0.31	U	mg/kg	0.7328	391	NO	NO	No Action: No standard exceeded
OD-SO-B-01	1,3,5-Trinitrobenzene	<	100	U	µg/kg	NA	NA	NO	NO	No Action: No standard exceeded
OD-SO-B-01	1,3-Dinitrobenzene	<	100	U	µg/kg	NA	NA	NO	NO	No Action: No standard exceeded
OD-SO-B-01	2,4-Dinitrotoluene	<	100	U	µg/kg	NA	120000	NO	NO	No Action: No standard exceeded
OD-SO-B-01	2,6-Dinitrotoluene	<	100	U	µg/kg	NA	NA	NO	NO	No Action: No standard exceeded
OD-SO-B-01	2-Amino-4,6-dinitrotoluene	<	100	U	µg/kg	NA	NA	NO	NO	No Action: No standard exceeded

Exhibit H-1 (Table 4)
Analytical Sample Results

Location	Parameter		Value	Flags	Units	20,000 UTL[1]	NMED SSL[2]	>UTL?	>SSL?	Evaluation
OD-SO-B-01	4-Amino-2,6-dinitrotoluene	<	100	U	µg/kg	NA	NA	NO	NO	No Action: No standard exceeded
OD-SO-B-01	HMX	<	200	U	µg/kg	NA	3000000	NO	NO	No Action: No standard exceeded
OD-SO-B-01	m-Nitrotoluene	<	200	U	µg/kg	NA	410000	NO	NO	No Action: No standard exceeded
OD-SO-B-01	Nitrobenzene	<	100	U	µg/kg	NA	21800	NO	NO	No Action: No standard exceeded
OD-SO-B-01	o-Nitrotoluene	<	200	U	µg/kg	NA	410000	NO	NO	No Action: No standard exceeded
OD-SO-B-01	PETN	<	500	U	µg/kg	61300	NA	NO	NO	No Action: No standard exceeded
OD-SO-B-01	p-Nitrotoluene	<	200	U	µg/kg	NA	410000	NO	NO	No Action: No standard exceeded
OD-SO-B-01	RDX	<	200	U	µg/kg	NA	4420	NO	NO	No Action: No standard exceeded
OD-SO-B-01	Tetryl	<	200	U	µg/kg	NA	NA	NO	NO	No Action: No standard exceeded
OD-SO-B-01	TNT	<	100	U	µg/kg	NA	30000	NO	NO	No Action: No standard exceeded
OD-SO-B-02	Antimony		0.54	BN	mg/kg	3.5279	31.3	NO	NO	No Action: No standard exceeded
OD-SO-B-02	Arsenic		0.65	B	mg/kg	1.4963	3.9	NO	NO	No Action: No standard exceeded
OD-SO-B-02	Barium		31.9		mg/kg	79.4971	5450	NO	NO	No Action: No standard exceeded
OD-SO-B-02	Beryllium		0.15	B	mg/kg	0.42	156	NO	NO	No Action: No standard exceeded
OD-SO-B-02	Cadmium		0.069	B	mg/kg	0.5417	74.1	NO	NO	No Action: No standard exceeded
OD-SO-B-02	Chromium		3.3		mg/kg	9.5027	234	NO	NO	No Action: No standard exceeded
OD-SO-B-02	Copper		3.7		mg/kg	9.1595	3130	NO	NO	No Action: No standard exceeded
OD-SO-B-02	Lead		2.1		mg/kg	7.6508	400	NO	NO	No Action: No standard exceeded
OD-SO-B-02	Nickel		2.1	E	mg/kg	6.5898	1560	NO	NO	No Action: No standard exceeded
OD-SO-B-02	Silver	<	0.34	U	mg/kg	0.7328	391	NO	NO	No Action: No standard exceeded
OD-SO-B-02	1,3,5-Trinitrobenzene	<	100	U	µg/kg	NA	NA	NO	NO	No Action: No standard exceeded
OD-SO-B-02	1,3-Dinitrobenzene	<	100	U	µg/kg	NA	NA	NO	NO	No Action: No standard exceeded
OD-SO-B-02	2,4-Dinitrotoluene	<	100	U	µg/kg	NA	120000	NO	NO	No Action: No standard exceeded
OD-SO-B-02	2,6-Dinitrotoluene	<	100	U	µg/kg	NA	NA	NO	NO	No Action: No standard exceeded
OD-SO-B-02	2-Amino-4,6-dinitrotoluene	<	100	U	µg/kg	NA	NA	NO	NO	No Action: No standard exceeded
OD-SO-B-02	4-Amino-2,6-dinitrotoluene	<	100	U	µg/kg	NA	NA	NO	NO	No Action: No standard exceeded
OD-SO-B-02	HMX	<	200	U	µg/kg	NA	3000000	NO	NO	No Action: No standard exceeded
OD-SO-B-02	m-Nitrotoluene	<	200	U	µg/kg	NA	410000	NO	NO	No Action: No standard exceeded
OD-SO-B-02	Nitrobenzene	<	100	U	µg/kg	NA	21800	NO	NO	No Action: No standard exceeded
OD-SO-B-02	o-Nitrotoluene	<	200	U	µg/kg	NA	410000	NO	NO	No Action: No standard exceeded
OD-SO-B-02	PETN	<	500	U	µg/kg	61300	NA	NO	NO	No Action: No standard exceeded
OD-SO-B-02	p-Nitrotoluene	<	200	U	µg/kg	NA	410000	NO	NO	No Action: No standard exceeded
OD-SO-B-02	RDX	<	200	U	µg/kg	NA	4420	NO	NO	No Action: No standard exceeded
OD-SO-B-02	Tetryl	<	200	U	µg/kg	NA	NA	NO	NO	No Action: No standard exceeded
OD-SO-B-02	TNT	<	100	U	µg/kg	NA	30000	NO	NO	No Action: No standard exceeded
OD-SO-B-03	Antimony	<	2	UN	mg/kg	3.5279	31.3	NO	NO	No Action: No standard exceeded
OD-SO-B-03	Arsenic		0.54	B	mg/kg	1.4963	3.9	NO	NO	No Action: No standard exceeded
OD-SO-B-03	Barium		30.9		mg/kg	79.4971	5450	NO	NO	No Action: No standard exceeded

Exhibit H-1 (Table 4)
Analytical Sample Results

Location	Parameter		Value	Flags	Units	20,000 UTL[1]	NMED SSL[2]	>UTL?	>SSL?	Evaluation
OD-SO-B-03	Beryllium		0.11	B	mg/kg	0.42	156	NO	NO	No Action: No standard exceeded
OD-SO-B-03	Cadmium		0.089	B	mg/kg	0.5417	74.1	NO	NO	No Action: No standard exceeded
OD-SO-B-03	Chromium		2.7		mg/kg	9.5027	234	NO	NO	No Action: No standard exceeded
OD-SO-B-03	Copper		3.6		mg/kg	9.1595	3130	NO	NO	No Action: No standard exceeded
OD-SO-B-03	Lead		1.5		mg/kg	7.6508	400	NO	NO	No Action: No standard exceeded
OD-SO-B-03	Nickel		1.6	E	mg/kg	6.5898	1560	NO	NO	No Action: No standard exceeded
OD-SO-B-03	Selenium	<	2	U	mg/kg	2.2645	391	NO	NO	No Action: No standard exceeded
OD-SO-B-03	Silver	<	0.3	U	mg/kg	0.7328	391	NO	NO	No Action: No standard exceeded
OD-SO-B-03	1,3,5-Trinitrobenzene	<	100	U	µg/kg	NA	NA	NO	NO	No Action: No standard exceeded
OD-SO-B-03	1,3-Dinitrobenzene	<	100	U	µg/kg	NA	NA	NO	NO	No Action: No standard exceeded
OD-SO-B-03	2,4-Dinitrotoluene	<	100	U	µg/kg	NA	120000	NO	NO	No Action: No standard exceeded
OD-SO-B-03	2,6-Dinitrotoluene	<	100	U	µg/kg	NA	NA	NO	NO	No Action: No standard exceeded
OD-SO-B-03	2-Amino-4,6-dinitrotoluene	<	100	U	µg/kg	NA	NA	NO	NO	No Action: No standard exceeded
OD-SO-B-03	4-Amino-2,6-dinitrotoluene	<	100	U	µg/kg	NA	NA	NO	NO	No Action: No standard exceeded
OD-SO-B-03	HMX	<	200	U	µg/kg	NA	3000000	NO	NO	No Action: No standard exceeded
OD-SO-B-03	m-Nitrotoluene	<	200	U	µg/kg	NA	410000	NO	NO	No Action: No standard exceeded
OD-SO-B-03	Nitrobenzene	<	100	U	µg/kg	NA	21800	NO	NO	No Action: No standard exceeded
OD-SO-B-03	o-Nitrotoluene	<	200	U	µg/kg	NA	410000	NO	NO	No Action: No standard exceeded
OD-SO-B-03	PETN	<	500	U	µg/kg	61300	NA	NO	NO	No Action: No standard exceeded
OD-SO-B-03	p-Nitrotoluene	<	200	U	µg/kg	NA	410000	NO	NO	No Action: No standard exceeded
OD-SO-B-03	RDX	<	200	U	µg/kg	NA	4420	NO	NO	No Action: No standard exceeded
OD-SO-B-03	Tetryl	<	200	U	µg/kg	NA	NA	NO	NO	No Action: No standard exceeded
OD-SO-B-03	TNT	<	100	U	µg/kg	NA	30000	NO	NO	No Action: No standard exceeded
OD-SO-B-04	Antimony	<	2.1	UN	mg/kg	3.5279	31.3	NO	NO	No Action: No standard exceeded
OD-SO-B-04	Arsenic		0.87	B	mg/kg	1.4963	3.9	NO	NO	No Action: No standard exceeded
OD-SO-B-04	Barium		35.6		mg/kg	79.4971	5450	NO	NO	No Action: No standard exceeded
OD-SO-B-04	Beryllium		0.13	B	mg/kg	0.42	156	NO	NO	No Action: No standard exceeded
OD-SO-B-04	Cadmium		0.18	B	mg/kg	0.5417	74.1	NO	NO	No Action: No standard exceeded
OD-SO-B-04	Chromium		3.5		mg/kg	9.5027	234	NO	NO	No Action: No standard exceeded
OD-SO-B-04	Copper		5.9		mg/kg	9.1595	3130	NO	NO	No Action: No standard exceeded
OD-SO-B-04	Lead		3.3		mg/kg	7.6508	400	NO	NO	No Action: No standard exceeded
OD-SO-B-04	Nickel		2.2	E	mg/kg	6.5898	1560	NO	NO	No Action: No standard exceeded
OD-SO-B-04	Selenium	<	2.1	U	mg/kg	2.2645	391	NO	NO	No Action: No standard exceeded
OD-SO-B-04	Silver	<	0.31	U	mg/kg	0.7328	391	NO	NO	No Action: No standard exceeded
OD-SO-B-04	1,3,5-Trinitrobenzene	<	100	U	µg/kg	NA	NA	NO	NO	No Action: No standard exceeded
OD-SO-B-04	1,3-Dinitrobenzene	<	100	U	µg/kg	NA	NA	NO	NO	No Action: No standard exceeded
OD-SO-B-04	2,4-Dinitrotoluene	<	100	U	µg/kg	NA	120000	NO	NO	No Action: No standard exceeded
OD-SO-B-04	2,6-Dinitrotoluene	<	100	U	µg/kg	NA	NA	NO	NO	No Action: No standard exceeded

Exhibit H-1 (Table 4)
Analytical Sample Results

Location	Parameter		Value	Flags	Units	20,000 UTL[1]	NMED SSL[2]	>UTL?	>SSL?	Evaluation
OD-SO-B-04	2-Amino-4,6-dinitrotoluene	<	100	U	µg/kg	NA	NA	NO	NO	No Action: No standard exceeded
OD-SO-B-04	4-Amino-2,6-dinitrotoluene	<	100	U	µg/kg	NA	NA	NO	NO	No Action: No standard exceeded
OD-SO-B-04	HMX	<	200	U	µg/kg	NA	3000000	NO	NO	No Action: No standard exceeded
OD-SO-B-04	m-Nitrotoluene	<	200	U	µg/kg	NA	410000	NO	NO	No Action: No standard exceeded
OD-SO-B-04	Nitrobenzene	<	100	U	µg/kg	NA	21800	NO	NO	No Action: No standard exceeded
OD-SO-B-04	o-Nitrotoluene	<	200	U	µg/kg	NA	410000	NO	NO	No Action: No standard exceeded
OD-SO-B-04	PETN	<	500	U	µg/kg	61300	NA	NO	NO	No Action: No standard exceeded
OD-SO-B-04	p-Nitrotoluene	<	200	U	µg/kg	NA	410000	NO	NO	No Action: No standard exceeded
OD-SO-B-04	RDX	<	200	U	µg/kg	NA	4420	NO	NO	No Action: No standard exceeded
OD-SO-B-04	Tetryl	<	200	U	µg/kg	NA	NA	NO	NO	No Action: No standard exceeded
OD-SO-B-04	TNT	<	100	U	µg/kg	NA	30000	NO	NO	No Action: No standard exceeded
OD-SO-C-01	Antimony		0.5	BN	mg/kg	3.5279	31.3	NO	NO	No Action: No standard exceeded
OD-SO-C-01	Barium		74.8		mg/kg	79.4971	5450	NO	NO	No Action: No standard exceeded
OD-SO-C-01	Chromium		9.3		mg/kg	9.5027	234	NO	NO	No Action: No standard exceeded
OD-SO-C-01	Nickel		6.2	E	mg/kg	6.5898	1560	NO	NO	No Action: No standard exceeded
OD-SO-C-01	Selenium	<	2	U	mg/kg	2.2645	391	NO	NO	No Action: No standard exceeded
OD-SO-C-01	Silver	<	0.29	U	mg/kg	0.7328	391	NO	NO	No Action: No standard exceeded
OD-SO-C-01	1,3,5-Trinitrobenzene	<	100	U	µg/kg	NA	NA	NO	NO	No Action: No standard exceeded
OD-SO-C-01	1,3-Dinitrobenzene	<	100	U	µg/kg	NA	NA	NO	NO	No Action: No standard exceeded
OD-SO-C-01	2,4-Dinitrotoluene	<	100	U	µg/kg	NA	120000	NO	NO	No Action: No standard exceeded
OD-SO-C-01	2,6-Dinitrotoluene	<	100	U	µg/kg	NA	NA	NO	NO	No Action: No standard exceeded
OD-SO-C-01	2-Amino-4,6-dinitrotoluene	<	100	U	µg/kg	NA	NA	NO	NO	No Action: No standard exceeded
OD-SO-C-01	4-Amino-2,6-dinitrotoluene	<	100	U	µg/kg	NA	NA	NO	NO	No Action: No standard exceeded
OD-SO-C-01	HMX	<	200	U	µg/kg	NA	3000000	NO	NO	No Action: No standard exceeded
OD-SO-C-01	m-Nitrotoluene	<	200	U	µg/kg	NA	410000	NO	NO	No Action: No standard exceeded
OD-SO-C-01	Nitrobenzene	<	100	U	µg/kg	NA	21800	NO	NO	No Action: No standard exceeded
OD-SO-C-01	o-Nitrotoluene	<	200	U	µg/kg	NA	410000	NO	NO	No Action: No standard exceeded
OD-SO-C-01	PETN	<	500	U	µg/kg	61300	NA	NO	NO	No Action: No standard exceeded
OD-SO-C-01	p-Nitrotoluene	<	200	U	µg/kg	NA	410000	NO	NO	No Action: No standard exceeded
OD-SO-C-01	RDX	<	200	U	µg/kg	NA	4420	NO	NO	No Action: No standard exceeded
OD-SO-C-01	Tetryl	<	200	U	µg/kg	NA	NA	NO	NO	No Action: No standard exceeded
OD-SO-C-01	TNT	<	100	U	µg/kg	NA	30000	NO	NO	No Action: No standard exceeded
OD-SO-C-02	Antimony	<	2	UN	mg/kg	3.5279	31.3	NO	NO	No Action: No standard exceeded
OD-SO-C-02	Arsenic		1	B	mg/kg	1.4963	3.9	NO	NO	No Action: No standard exceeded
OD-SO-C-02	Barium		38.5		mg/kg	79.4971	5450	NO	NO	No Action: No standard exceeded
OD-SO-C-02	Beryllium		0.17	B	mg/kg	0.42	156	NO	NO	No Action: No standard exceeded
OD-SO-C-02	Cadmium		0.14	B	mg/kg	0.5417	74.1	NO	NO	No Action: No standard exceeded
OD-SO-C-02	Chromium		4		mg/kg	9.5027	234	NO	NO	No Action: No standard exceeded

Exhibit H-1 (Table 4)
Analytical Sample Results

Location	Parameter		Value	Flags	Units	20,000 UTL[1]	NMED SSL[2]	>UTL?	>SSL?	Evaluation
OD-SO-C-02	Copper		5.4		mg/kg	9.1595	3130	NO	NO	No Action: No standard exceeded
OD-SO-C-02	Lead		3.4		mg/kg	7.6508	400	NO	NO	No Action: No standard exceeded
OD-SO-C-02	Nickel		2.5	E	mg/kg	6.5898	1560	NO	NO	No Action: No standard exceeded
OD-SO-C-02	Selenium	<	2	U	mg/kg	2.2645	391	NO	NO	No Action: No standard exceeded
OD-SO-C-02	Silver	<	0.3	U	mg/kg	0.7328	391	NO	NO	No Action: No standard exceeded
OD-SO-C-02	1,3,5-Trinitrobenzene	<	100	U	µg/kg	NA	NA	NO	NO	No Action: No standard exceeded
OD-SO-C-02	1,3-Dinitrobenzene	<	100	U	µg/kg	NA	NA	NO	NO	No Action: No standard exceeded
OD-SO-C-02	2,4-Dinitrotoluene	<	100	U	µg/kg	NA	120000	NO	NO	No Action: No standard exceeded
OD-SO-C-02	2,6-Dinitrotoluene	<	100	U	µg/kg	NA	NA	NO	NO	No Action: No standard exceeded
OD-SO-C-02	2-Amino-4,6-dinitrotoluene	<	100	U	µg/kg	NA	NA	NO	NO	No Action: No standard exceeded
OD-SO-C-02	4-Amino-2,6-dinitrotoluene	<	100	U	µg/kg	NA	NA	NO	NO	No Action: No standard exceeded
OD-SO-C-02	HMX	<	200	U	µg/kg	NA	3000000	NO	NO	No Action: No standard exceeded
OD-SO-C-02	m-Nitrotoluene	<	200	U	µg/kg	NA	410000	NO	NO	No Action: No standard exceeded
OD-SO-C-02	Nitrobenzene	<	100	U	µg/kg	NA	21800	NO	NO	No Action: No standard exceeded
OD-SO-C-02	o-Nitrotoluene	<	200	U	µg/kg	NA	410000	NO	NO	No Action: No standard exceeded
OD-SO-C-02	PETN	<	500	U	µg/kg	61300	NA	NO	NO	No Action: No standard exceeded
OD-SO-C-02	p-Nitrotoluene	<	200	U	µg/kg	NA	410000	NO	NO	No Action: No standard exceeded
OD-SO-C-02	RDX		480		µg/kg	NA	4420	NO	NO	No Action: No standard exceeded
OD-SO-C-02	Tetryl	<	200	U	µg/kg	NA	NA	NO	NO	No Action: No standard exceeded
OD-SO-C-02	TNT	<	100	U	µg/kg	NA	30000	NO	NO	No Action: No standard exceeded
OD-SO-C-03	Antimony	<	2	UN	mg/kg	3.5279	31.3	NO	NO	No Action: No standard exceeded
OD-SO-C-03	Arsenic		0.84	B	mg/kg	1.4963	3.9	NO	NO	No Action: No standard exceeded
OD-SO-C-03	Barium		39.4		mg/kg	79.4971	5450	NO	NO	No Action: No standard exceeded
OD-SO-C-03	Beryllium		0.12	B	mg/kg	0.42	156	NO	NO	No Action: No standard exceeded
OD-SO-C-03	Cadmium		0.4	B	mg/kg	0.5417	74.1	NO	NO	No Action: No standard exceeded
OD-SO-C-03	Chromium		3.2		mg/kg	9.5027	234	NO	NO	No Action: No standard exceeded
OD-SO-C-03	Copper		5.8		mg/kg	9.1595	3130	NO	NO	No Action: No standard exceeded
OD-SO-C-03	Lead		3.8		mg/kg	7.6508	400	NO	NO	No Action: No standard exceeded
OD-SO-C-03	Nickel		2.3	E	mg/kg	6.5898	1560	NO	NO	No Action: No standard exceeded
OD-SO-C-03	Selenium	<	2	U	mg/kg	2.2645	391	NO	NO	No Action: No standard exceeded
OD-SO-C-03	Silver	<	0.29	U	mg/kg	0.7328	391	NO	NO	No Action: No standard exceeded
OD-SO-C-03	1,3,5-Trinitrobenzene	<	100	U	µg/kg	NA	NA	NO	NO	No Action: No standard exceeded
OD-SO-C-03	1,3-Dinitrobenzene	<	100	U	µg/kg	NA	NA	NO	NO	No Action: No standard exceeded
OD-SO-C-03	2,4-Dinitrotoluene	<	100	U	µg/kg	NA	120000	NO	NO	No Action: No standard exceeded
OD-SO-C-03	2,6-Dinitrotoluene	<	100	U	µg/kg	NA	NA	NO	NO	No Action: No standard exceeded
OD-SO-C-03	2-Amino-4,6-dinitrotoluene	<	100	U	µg/kg	NA	NA	NO	NO	No Action: No standard exceeded
OD-SO-C-03	4-Amino-2,6-dinitrotoluene	<	100	U	µg/kg	NA	NA	NO	NO	No Action: No standard exceeded
OD-SO-C-03	HMX	<	200	U	µg/kg	NA	3000000	NO	NO	No Action: No standard exceeded

Exhibit H-1 (Table 4)
Analytical Sample Results

Location	Parameter		Value	Flags	Units	20,000 UTL[1]	NMED SSL[2]	>UTL?	>SSL?	Evaluation
OD-SO-C-03	m-Nitrotoluene	<	200	U	µg/kg	NA	410000	NO	NO	No Action: No standard exceeded
OD-SO-C-03	Nitrobenzene	<	100	U	µg/kg	NA	21800	NO	NO	No Action: No standard exceeded
OD-SO-C-03	o-Nitrotoluene	<	200	U	µg/kg	NA	410000	NO	NO	No Action: No standard exceeded
OD-SO-C-03	PETN	<	500	U	µg/kg	61300	NA	NO	NO	No Action: No standard exceeded
OD-SO-C-03	p-Nitrotoluene	<	200	U	µg/kg	NA	410000	NO	NO	No Action: No standard exceeded
OD-SO-C-03	RDX	<	200	U	µg/kg	NA	4420	NO	NO	No Action: No standard exceeded
OD-SO-C-03	Tetryl	<	200	U	µg/kg	NA	NA	NO	NO	No Action: No standard exceeded
OD-SO-C-03	TNT	<	100	U	µg/kg	NA	30000	NO	NO	No Action: No standard exceeded
OD-SO-C-04	Antimony	<	1.9	UN	mg/kg	3.5279	31.3	NO	NO	No Action: No standard exceeded
OD-SO-C-04	Arsenic		1.1	B	mg/kg	1.4963	3.9	NO	NO	No Action: No standard exceeded
OD-SO-C-04	Barium		30.5		mg/kg	79.4971	5450	NO	NO	No Action: No standard exceeded
OD-SO-C-04	Beryllium		0.098	B	mg/kg	0.42	156	NO	NO	No Action: No standard exceeded
OD-SO-C-04	Cadmium		0.33	B	mg/kg	0.5417	74.1	NO	NO	No Action: No standard exceeded
OD-SO-C-04	Chromium		2.5		mg/kg	9.5027	234	NO	NO	No Action: No standard exceeded
OD-SO-C-04	Copper		3.1		mg/kg	9.1595	3130	NO	NO	No Action: No standard exceeded
OD-SO-C-04	Lead		1.8		mg/kg	7.6508	400	NO	NO	No Action: No standard exceeded
OD-SO-C-04	Nickel		1.6	E	mg/kg	6.5898	1560	NO	NO	No Action: No standard exceeded
OD-SO-C-04	Selenium	<	1.9	U	mg/kg	2.2645	391	NO	NO	No Action: No standard exceeded
OD-SO-C-04	Silver	<	0.28	U	mg/kg	0.7328	391	NO	NO	No Action: No standard exceeded
OD-SO-C-04	1,3,5-Trinitrobenzene	<	100	U	µg/kg	NA	NA	NO	NO	No Action: No standard exceeded
OD-SO-C-04	1,3-Dinitrobenzene	<	100	U	µg/kg	NA	NA	NO	NO	No Action: No standard exceeded
OD-SO-C-04	2,4-Dinitrotoluene	<	100	U	µg/kg	NA	120000	NO	NO	No Action: No standard exceeded
OD-SO-C-04	2,6-Dinitrotoluene	<	100	U	µg/kg	NA	NA	NO	NO	No Action: No standard exceeded
OD-SO-C-04	2-Amino-4,6-dinitrotoluene	<	100	U	µg/kg	NA	NA	NO	NO	No Action: No standard exceeded
OD-SO-C-04	4-Amino-2,6-dinitrotoluene	<	100	U	µg/kg	NA	NA	NO	NO	No Action: No standard exceeded
OD-SO-C-04	HMX	<	200	U	µg/kg	NA	3000000	NO	NO	No Action: No standard exceeded
OD-SO-C-04	m-Nitrotoluene	<	200	U	µg/kg	NA	410000	NO	NO	No Action: No standard exceeded
OD-SO-C-04	Nitrobenzene	<	100	U	µg/kg	NA	21800	NO	NO	No Action: No standard exceeded
OD-SO-C-04	o-Nitrotoluene	<	200	U	µg/kg	NA	410000	NO	NO	No Action: No standard exceeded
OD-SO-C-04	PETN	<	500	U	µg/kg	61300	NA	NO	NO	No Action: No standard exceeded
OD-SO-C-04	p-Nitrotoluene	<	200	U	µg/kg	NA	410000	NO	NO	No Action: No standard exceeded
OD-SO-C-04	RDX	<	200	U	µg/kg	NA	4420	NO	NO	No Action: No standard exceeded
OD-SO-C-04	Tetryl	<	200	U	µg/kg	NA	NA	NO	NO	No Action: No standard exceeded
OD-SO-C-04	TNT	<	100	U	µg/kg	NA	30000	NO	NO	No Action: No standard exceeded
OD-SO-C-04A	Antimony	<	1.8	UN	mg/kg	3.5279	31.3	NO	NO	No Action: No standard exceeded
OD-SO-C-04A	Arsenic		1.1	B	mg/kg	1.4963	3.9	NO	NO	No Action: No standard exceeded
OD-SO-C-04A	Barium		29.6		mg/kg	79.4971	5450	NO	NO	No Action: No standard exceeded
OD-SO-C-04A	Beryllium		0.089	B	mg/kg	0.42	156	NO	NO	No Action: No standard exceeded

Exhibit H-1 (Table 4)
Analytical Sample Results

Location	Parameter		Value	Flags	Units	20,000 UTL[1]	NMED SSL[2]	>UTL?	>SSL?	Evaluation
OD-SO-C-04A	Cadmium		0.31	B	mg/kg	0.5417	74.1	NO	NO	No Action: No standard exceeded
OD-SO-C-04A	Chromium		2.1		mg/kg	9.5027	234	NO	NO	No Action: No standard exceeded
OD-SO-C-04A	Copper		3		mg/kg	9.1595	3130	NO	NO	No Action: No standard exceeded
OD-SO-C-04A	Lead		1.4		mg/kg	7.6508	400	NO	NO	No Action: No standard exceeded
OD-SO-C-04A	Nickel		1.5	E	mg/kg	6.5898	1560	NO	NO	No Action: No standard exceeded
OD-SO-C-04A	Selenium	<	1.8	U	mg/kg	2.2645	391	NO	NO	No Action: No standard exceeded
OD-SO-C-04A	Silver	<	0.26	U	mg/kg	0.7328	391	NO	NO	No Action: No standard exceeded
OD-SO-C-04A	1,3,5-Trinitrobenzene	<	100	U	µg/kg	NA	NA	NO	NO	No Action: No standard exceeded
OD-SO-C-04A	1,3-Dinitrobenzene	<	100	U	µg/kg	NA	NA	NO	NO	No Action: No standard exceeded
OD-SO-C-04A	2,4-Dinitrotoluene	<	100	U	µg/kg	NA	120000	NO	NO	No Action: No standard exceeded
OD-SO-C-04A	2,6-Dinitrotoluene	<	100	U	µg/kg	NA	NA	NO	NO	No Action: No standard exceeded
OD-SO-C-04A	2-Amino-4,6-dinitrotoluene	<	100	U	µg/kg	NA	NA	NO	NO	No Action: No standard exceeded
OD-SO-C-04A	4-Amino-2,6-dinitrotoluene	<	100	U	µg/kg	NA	NA	NO	NO	No Action: No standard exceeded
OD-SO-C-04A	HMX	<	200	U	µg/kg	NA	3000000	NO	NO	No Action: No standard exceeded
OD-SO-C-04A	m-Nitrotoluene	<	200	U	µg/kg	NA	410000	NO	NO	No Action: No standard exceeded
OD-SO-C-04A	Nitrobenzene	<	100	U	µg/kg	NA	21800	NO	NO	No Action: No standard exceeded
OD-SO-C-04A	o-Nitrotoluene	<	200	U	µg/kg	NA	410000	NO	NO	No Action: No standard exceeded
OD-SO-C-04A	PETN	<	500	U	µg/kg	61300	NA	NO	NO	No Action: No standard exceeded
OD-SO-C-04A	p-Nitrotoluene	<	200	U	µg/kg	NA	410000	NO	NO	No Action: No standard exceeded
OD-SO-C-04A	RDX	<	200	U	µg/kg	NA	4420	NO	NO	No Action: No standard exceeded
OD-SO-C-04A	Tetryl	<	200	U	µg/kg	NA	NA	NO	NO	No Action: No standard exceeded
OD-SO-C-04A	TNT	<	100	U	µg/kg	NA	30000	NO	NO	No Action: No standard exceeded
[1] 20,000 UTL:	Final Background Study, 20000-Pound Open Detonation Unit, December 1997									
[2] NMED SSL:	New Mexico Environment Department Soil Screening Levels, February 2004, Revision 2									

Exhibit H-1 (Table 5)
Analytical Sample Results

Location	Parameter		Value	Flags	Units	20,000 UTL[1]	NMED SSL[2]	>UTL?	>SSL?	Evaluation
OD-SO-A-01	Arsenic		2.2		mg/kg	1.4963	3.9	YES	NO	No Action:UTL exceeded but not SSL
OD-SO-A-01	Barium		81.2		mg/kg	79.4971	5450	YES	NO	No Action:UTL exceeded but not SSL
OD-SO-A-01	Copper		9.6		mg/kg	9.1595	3130	YES	NO	No Action:UTL exceeded but not SSL
OD-SO-A-03	Arsenic		2.3		mg/kg	1.4963	3.9	YES	NO	No Action:UTL exceeded but not SSL
OD-SO-A-03	Barium		89.5		mg/kg	79.4971	5450	YES	NO	No Action:UTL exceeded but not SSL
OD-SO-A-04	Arsenic		3.2		mg/kg	1.4963	3.9	YES	NO	No Action:UTL exceeded but not SSL
OD-SO-A-04	Beryllium		0.76		mg/kg	0.42	156	YES	NO	No Action:UTL exceeded but not SSL
OD-SO-A-04	Cadmium		0.76		mg/kg	0.5417	74.1	YES	NO	No Action:UTL exceeded but not SSL
OD-SO-A-04	Chromium		15.9		mg/kg	9.5027	234	YES	NO	No Action:UTL exceeded but not SSL
OD-SO-A-04	Copper		44.5		mg/kg	9.1595	3130	YES	NO	No Action:UTL exceeded but not SSL
OD-SO-A-04	Lead		8.2		mg/kg	7.6508	400	YES	NO	No Action:UTL exceeded but not SSL
OD-SO-A-04	Nickel		12.6		mg/kg	6.5898	1560	YES	NO	No Action:UTL exceeded but not SSL
OD-SO-A-04	Silver		1.5	*	mg/kg	0.7328	391	YES	NO	No Action:UTL exceeded but not SSL
OD-SO-A-04	Mercury	<	0.032	U	mg/kg	0.0269	6.11	YES	NO	No Action: result flagged "U"
OD-SO-A-04	Nitroglycerine	<	5800	U	µg/kg	93.6772	347000	YES	NO	No Action: result flagged "U"
OD-SO-A-04A	Arsenic		2.2		mg/kg	1.4963	3.9	YES	NO	No Action:UTL exceeded but not SSL
OD-SO-A-04A	Barium		96.9		mg/kg	79.4971	5450	YES	NO	No Action:UTL exceeded but not SSL
OD-SO-A-04A	Beryllium		0.52		mg/kg	0.42	156	YES	NO	No Action:UTL exceeded but not SSL
OD-SO-A-04A	Cadmium		1.3		mg/kg	0.5417	74.1	YES	NO	No Action:UTL exceeded but not SSL
OD-SO-A-04A	Chromium		13.3		mg/kg	9.5027	234	YES	NO	No Action:UTL exceeded but not SSL
OD-SO-A-04A	Copper		33.5		mg/kg	9.1595	3130	YES	NO	No Action:UTL exceeded but not SSL
OD-SO-A-04A	Nickel		11.6		mg/kg	6.5898	1560	YES	NO	No Action:UTL exceeded but not SSL
OD-SO-A-04A	Silver		2.9	*	mg/kg	0.7328	391	YES	NO	No Action:UTL exceeded but not SSL
OD-SO-A-04A	Mercury	<	0.032	U	mg/kg	0.0269	6.11	YES	NO	No Action: result flagged "U"
OD-SO-A-04A	Nitroglycerine	<	5800	U	µg/kg	93.6772	347000	YES	NO	No Action: result flagged "U"
OD-SO-B-02	Copper		12.2		mg/kg	9.1595	3130	YES	NO	No Action:UTL exceeded but not SSL
OD-SO-B-03	Mercury	<	0.034	U	mg/kg	0.0269	6.11	YES	NO	No Action: result flagged "U"
OD-SO-B-03	Nitroglycerine		4000	J	µg/kg	93.6772	347000	YES	NO	No Action:UTL exceeded but not SSL
OD-SO-C-03	Arsenic		2.1		mg/kg	1.4963	3.9	YES	NO	No Action:UTL exceeded but not SSL
OD-SO-C-03	Cadmium		0.59		mg/kg	0.5417	74.1	YES	NO	No Action:UTL exceeded but not SSL
OD-SO-C-03	Copper		13.4		mg/kg	9.1595	3130	YES	NO	No Action:UTL exceeded but not SSL
OD-SO-C-03	Lead		10		mg/kg	7.6508	400	YES	NO	No Action:UTL exceeded but not SSL
OD-SO-C-04	Cadmium		0.57	B	mg/kg	0.5417	74.1	YES	NO	No Action: result flagged "B"
OD-SO-A-01	Antimony		0.54	BN	mg/kg	3.5279	31.3	NO	NO	No Action: No standard exceeded
OD-SO-A-01	Beryllium		0.41		mg/kg	0.42	156	NO	NO	No Action: No standard exceeded
OD-SO-A-01	Cadmium		0.25	B	mg/kg	0.5417	74.1	NO	NO	No Action: No standard exceeded
OD-SO-A-01	Chromium		8.7		mg/kg	9.5027	234	NO	NO	No Action: No standard exceeded
OD-SO-A-01	Lead		4.3		mg/kg	7.6508	400	NO	NO	No Action: No standard exceeded
OD-SO-A-01	Nickel		6.4		mg/kg	6.5898	1560	NO	NO	No Action: No standard exceeded

Exhibit H-1 (Table 5)
Analytical Sample Results

Location	Parameter		Value	Flags	Units	20,000 UTL[1]	NMED SSL[2]	>UTL?	>SSL?	Evaluation
OD-SO-A-01	Selenium	<	0	U	mg/kg	2.2645	391	NO	NO	No Action: No standard exceeded
OD-SO-A-01	Silver		0.28	B*	mg/kg	0.7328	391	NO	NO	No Action: No standard exceeded
OD-SO-A-01	Mercury	<	0	U	mg/kg	0.0269	6.11	NO	NO	No Action: No standard exceeded
OD-SO-A-01	1,3,5-Trinitrobenzene	<	0	U	µg/kg	NA	NA	NO	NO	No Action: No standard exceeded
OD-SO-A-01	1,3-Dinitrobenzene	<	0	U	µg/kg	NA	NA	NO	NO	No Action: No standard exceeded
OD-SO-A-01	2,4-Dinitrotoluene	<	0	U	µg/kg	NA	120000	NO	NO	No Action: No standard exceeded
OD-SO-A-01	2,6-Dinitrotoluene	<	0	U	µg/kg	NA	NA	NO	NO	No Action: No standard exceeded
OD-SO-A-01	2-Amino-4,6-dinitrotoluene	<	0	U	µg/kg	NA	NA	NO	NO	No Action: No standard exceeded
OD-SO-A-01	4-Amino-2,6-dinitrotoluene	<	0	U	µg/kg	NA	NA	NO	NO	No Action: No standard exceeded
OD-SO-A-01	HMX	<	0	U	µg/kg	NA	3000000	NO	NO	No Action: No standard exceeded
OD-SO-A-01	m-Nitrotoluene	<	0	U	µg/kg	NA	410000	NO	NO	No Action: No standard exceeded
OD-SO-A-01	Nitrobenzene		60	JB	µg/kg	NA	21800	NO	NO	No Action: No standard exceeded
OD-SO-A-01	o-Nitrotoluene	<	0	U	µg/kg	NA	410000	NO	NO	No Action: No standard exceeded
OD-SO-A-01	PETN	<	0	U	µg/kg	61300	NA	NO	NO	No Action: No standard exceeded
OD-SO-A-01	p-Nitrotoluene	<	0	U	µg/kg	NA	410000	NO	NO	No Action: No standard exceeded
OD-SO-A-01	RDX	<	0	U	µg/kg	NA	4420	NO	NO	No Action: No standard exceeded
OD-SO-A-01	Tetryl	<	0	U	µg/kg	NA	NA	NO	NO	No Action: No standard exceeded
OD-SO-A-01	TNT	<	0	U	µg/kg	NA	30000	NO	NO	No Action: No standard exceeded
OD-SO-A-01	Nitroglycerine	<	0	U	µg/kg	93.6772	347000	NO	NO	No Action: No standard exceeded
OD-SO-A-02	Antimony		0.42	BN	mg/kg	3.5279	31.3	NO	NO	No Action: No standard exceeded
OD-SO-A-02	Arsenic		1	B	mg/kg	1.4963	3.9	NO	NO	No Action: No standard exceeded
OD-SO-A-02	Barium		34.1		mg/kg	79.4971	5450	NO	NO	No Action: No standard exceeded
OD-SO-A-02	Beryllium		0.17	B	mg/kg	0.42	156	NO	NO	No Action: No standard exceeded
OD-SO-A-02	Cadmium		0.18	B	mg/kg	0.5417	74.1	NO	NO	No Action: No standard exceeded
OD-SO-A-02	Chromium		3.6		mg/kg	9.5027	234	NO	NO	No Action: No standard exceeded
OD-SO-A-02	Copper		3		mg/kg	9.1595	3130	NO	NO	No Action: No standard exceeded
OD-SO-A-02	Lead		2.1		mg/kg	7.6508	400	NO	NO	No Action: No standard exceeded
OD-SO-A-02	Nickel		2.4		mg/kg	6.5898	1560	NO	NO	No Action: No standard exceeded
OD-SO-A-02	Selenium	<	0	U	mg/kg	2.2645	391	NO	NO	No Action: No standard exceeded
OD-SO-A-02	Silver		0.28	*	mg/kg	0.7328	391	NO	NO	No Action: No standard exceeded
OD-SO-A-02	Mercury	<	0	U	mg/kg	0.0269	6.11	NO	NO	No Action: No standard exceeded
OD-SO-A-02	1,3,5-Trinitrobenzene	<	0	U	µg/kg	NA	NA	NO	NO	No Action: No standard exceeded
OD-SO-A-02	1,3-Dinitrobenzene	<	0	U	µg/kg	NA	NA	NO	NO	No Action: No standard exceeded
OD-SO-A-02	2,4-Dinitrotoluene	<	0	U	µg/kg	NA	120000	NO	NO	No Action: No standard exceeded
OD-SO-A-02	2,6-Dinitrotoluene	<	0	U	µg/kg	NA	NA	NO	NO	No Action: No standard exceeded
OD-SO-A-02	2-Amino-4,6-dinitrotoluene	<	0	U	µg/kg	NA	NA	NO	NO	No Action: No standard exceeded
OD-SO-A-02	4-Amino-2,6-dinitrotoluene	<	0	U	µg/kg	NA	NA	NO	NO	No Action: No standard exceeded
OD-SO-A-02	HMX	<	0	U	µg/kg	NA	3000000	NO	NO	No Action: No standard exceeded
OD-SO-A-02	m-Nitrotoluene	<	0	U	µg/kg	NA	410000	NO	NO	No Action: No standard exceeded

Exhibit H-1 (Table 5)
Analytical Sample Results

Location	Parameter		Value	Flags	Units	20,000 UTL[1]	NMED SSL[2]	>UTL?	>SSL?	Evaluation
OD-SO-A-02	Nitrobenzene		50	B	µg/kg	NA	21800	NO	NO	No Action: No standard exceeded
OD-SO-A-02	o-Nitrotoluene	<	0	U	µg/kg	NA	410000	NO	NO	No Action: No standard exceeded
OD-SO-A-02	PETN	<	0	U	µg/kg	61300	NA	NO	NO	No Action: No standard exceeded
OD-SO-A-02	p-Nitrotoluene	<	0	U	µg/kg	NA	410000	NO	NO	No Action: No standard exceeded
OD-SO-A-02	RDX	<	0	U	µg/kg	NA	4420	NO	NO	No Action: No standard exceeded
OD-SO-A-02	Tetryl	<	0	U	µg/kg	NA	NA	NO	NO	No Action: No standard exceeded
OD-SO-A-02	TNT	<	0	U	µg/kg	NA	30000	NO	NO	No Action: No standard exceeded
OD-SO-A-02	Nitroglycerine	<	0	U	µg/kg	93.6772	347000	NO	NO	No Action: No standard exceeded
OD-SO-A-03	Antimony		0.48	BN	mg/kg	3.5279	31.3	NO	NO	No Action: No standard exceeded
OD-SO-A-03	Beryllium		0.41		mg/kg	0.42	156	NO	NO	No Action: No standard exceeded
OD-SO-A-03	Cadmium		0.27	B	mg/kg	0.5417	74.1	NO	NO	No Action: No standard exceeded
OD-SO-A-03	Chromium		8.6		mg/kg	9.5027	234	NO	NO	No Action: No standard exceeded
OD-SO-A-03	Copper		6.2		mg/kg	9.1595	3130	NO	NO	No Action: No standard exceeded
OD-SO-A-03	Lead		4.2		mg/kg	7.6508	400	NO	NO	No Action: No standard exceeded
OD-SO-A-03	Nickel		6.2		mg/kg	6.5898	1560	NO	NO	No Action: No standard exceeded
OD-SO-A-03	Selenium	<	0	U	mg/kg	2.2645	391	NO	NO	No Action: No standard exceeded
OD-SO-A-03	Silver	<	0	U*	mg/kg	0.7328	391	NO	NO	No Action: No standard exceeded
OD-SO-A-03	Mercury	<	0	U	mg/kg	0.0269	6.11	NO	NO	No Action: No standard exceeded
OD-SO-A-03	1,3,5-Trinitrobenzene	<	0	U	µg/kg	NA	NA	NO	NO	No Action: No standard exceeded
OD-SO-A-03	1,3-Dinitrobenzene	<	0	U	µg/kg	NA	NA	NO	NO	No Action: No standard exceeded
OD-SO-A-03	2,4-Dinitrotoluene	<	0	U	µg/kg	NA	120000	NO	NO	No Action: No standard exceeded
OD-SO-A-03	2,6-Dinitrotoluene	<	0	U	µg/kg	NA	NA	NO	NO	No Action: No standard exceeded
OD-SO-A-03	2-Amino-4,6-dinitrotoluene	<	0	U	µg/kg	NA	NA	NO	NO	No Action: No standard exceeded
OD-SO-A-03	4-Amino-2,6-dinitrotoluene	<	0	U	µg/kg	NA	NA	NO	NO	No Action: No standard exceeded
OD-SO-A-03	HMX	<	0	U	µg/kg	NA	3000000	NO	NO	No Action: No standard exceeded
OD-SO-A-03	m-Nitrotoluene	<	0	U	µg/kg	NA	410000	NO	NO	No Action: No standard exceeded
OD-SO-A-03	Nitrobenzene		0	B	µg/kg	NA	21800	NO	NO	No Action: No standard exceeded
OD-SO-A-03	o-Nitrotoluene	<	0	U	µg/kg	NA	410000	NO	NO	No Action: No standard exceeded
OD-SO-A-03	PETN	<	0	U	µg/kg	61300	NA	NO	NO	No Action: No standard exceeded
OD-SO-A-03	p-Nitrotoluene	<	0	U	µg/kg	NA	410000	NO	NO	No Action: No standard exceeded
OD-SO-A-03	RDX		20		µg/kg	NA	4420	NO	NO	No Action: No standard exceeded
OD-SO-A-03	Tetryl	<	0	U	µg/kg	NA	NA	NO	NO	No Action: No standard exceeded
OD-SO-A-03	TNT	<	0	U	µg/kg	NA	30000	NO	NO	No Action: No standard exceeded
OD-SO-A-03	Nitroglycerine	<	0	U	µg/kg	93.6772	347000	NO	NO	No Action: No standard exceeded
OD-SO-A-04	Antimony		0.79	BN	mg/kg	3.5279	31.3	NO	NO	No Action: No standard exceeded
OD-SO-A-04	Barium		15		mg/kg	79.4971	5450	NO	NO	No Action: No standard exceeded
OD-SO-A-04	Selenium	<	1.8	U	mg/kg	2.2645	391	NO	NO	No Action: No standard exceeded
OD-SO-A-04	1,3,5-Trinitrobenzene	<	100	U	µg/kg	NA	NA	NO	NO	No Action: No standard exceeded
OD-SO-A-04	1,3-Dinitrobenzene	<	100	U	µg/kg	NA	NA	NO	NO	No Action: No standard exceeded

Exhibit H-1 (Table 5)
Analytical Sample Results

Location	Parameter		Value	Flags	Units	20,000 UTL[1]	NMED SSL[2]	>UTL?	>SSL?	Evaluation
OD-SO-A-04	2,4-Dinitrotoluene	<	100	U	µg/kg	NA	120000	NO	NO	No Action: No standard exceeded
OD-SO-A-04	2,6-Dinitrotoluene	<	100	U	µg/kg	NA	NA	NO	NO	No Action: No standard exceeded
OD-SO-A-04	2-Amino-4,6-dinitrotoluene	<	100	U	µg/kg	NA	NA	NO	NO	No Action: No standard exceeded
OD-SO-A-04	4-Amino-2,6-dinitrotoluene	<	100	U	µg/kg	NA	NA	NO	NO	No Action: No standard exceeded
OD-SO-A-04	HMX	<	200	U	µg/kg	NA	3000000	NO	NO	No Action: No standard exceeded
OD-SO-A-04	m-Nitrotoluene	<	200	U	µg/kg	NA	410000	NO	NO	No Action: No standard exceeded
OD-SO-A-04	Nitrobenzene		50	B	µg/kg	NA	21800	NO	NO	No Action: No standard exceeded
OD-SO-A-04	o-Nitrotoluene	<	200	U	µg/kg	NA	410000	NO	NO	No Action: No standard exceeded
OD-SO-A-04	PETN	<	500	U	µg/kg	61300	NA	NO	NO	No Action: No standard exceeded
OD-SO-A-04	p-Nitrotoluene	<	200	U	µg/kg	NA	410000	NO	NO	No Action: No standard exceeded
OD-SO-A-04	RDX	<	200	U	µg/kg	NA	4420	NO	NO	No Action: No standard exceeded
OD-SO-A-04	Tetryl	<	200	U	µg/kg	NA	NA	NO	NO	No Action: No standard exceeded
OD-SO-A-04	TNT	<	100	U	µg/kg	NA	30000	NO	NO	No Action: No standard exceeded
OD-SO-A-04A	Antimony		0.45	BN	mg/kg	3.5279	31.3	NO	NO	No Action: No standard exceeded
OD-SO-A-04A	Lead		7.3		mg/kg	7.6508	400	NO	NO	No Action: No standard exceeded
OD-SO-A-04A	Selenium	<	1.9	U	mg/kg	2.2645	391	NO	NO	No Action: No standard exceeded
OD-SO-A-04A	1,3,5-Trinitrobenzene	<	100	U	µg/kg	NA	NA	NO	NO	No Action: No standard exceeded
OD-SO-A-04A	1,3-Dinitrobenzene	<	100	U	µg/kg	NA	NA	NO	NO	No Action: No standard exceeded
OD-SO-A-04A	2,4-Dinitrotoluene	<	100	U	µg/kg	NA	120000	NO	NO	No Action: No standard exceeded
OD-SO-A-04A	2,6-Dinitrotoluene	<	100	U	µg/kg	NA	NA	NO	NO	No Action: No standard exceeded
OD-SO-A-04A	2-Amino-4,6-dinitrotoluene	<	100	U	µg/kg	NA	NA	NO	NO	No Action: No standard exceeded
OD-SO-A-04A	4-Amino-2,6-dinitrotoluene	<	100	U	µg/kg	NA	NA	NO	NO	No Action: No standard exceeded
OD-SO-A-04A	HMX	<	200	U	µg/kg	NA	3000000	NO	NO	No Action: No standard exceeded
OD-SO-A-04A	m-Nitrotoluene	<	200	U	µg/kg	NA	410000	NO	NO	No Action: No standard exceeded
OD-SO-A-04A	Nitrobenzene		100	B	µg/kg	NA	21800	NO	NO	No Action: No standard exceeded
OD-SO-A-04A	o-Nitrotoluene	<	200	U	µg/kg	NA	410000	NO	NO	No Action: No standard exceeded
OD-SO-A-04A	PETN	<	500	U	µg/kg	61300	NA	NO	NO	No Action: No standard exceeded
OD-SO-A-04A	p-Nitrotoluene	<	200	U	µg/kg	NA	410000	NO	NO	No Action: No standard exceeded
OD-SO-A-04A	RDX	<	200	U	µg/kg	NA	4420	NO	NO	No Action: No standard exceeded
OD-SO-A-04A	Tetryl	<	200	U	µg/kg	NA	NA	NO	NO	No Action: No standard exceeded
OD-SO-A-04A	TNT	<	100	U	µg/kg	NA	30000	NO	NO	No Action: No standard exceeded
OD-SO-B-01	Antimony		0.42	BN	mg/kg	3.5279	31.3	NO	NO	No Action: No standard exceeded
OD-SO-B-01	Arsenic		0.7	B	mg/kg	1.4963	3.9	NO	NO	No Action: No standard exceeded
OD-SO-B-01	Barium		36		mg/kg	79.4971	5450	NO	NO	No Action: No standard exceeded
OD-SO-B-01	Beryllium		0.15	B	mg/kg	0.42	156	NO	NO	No Action: No standard exceeded
OD-SO-B-01	Cadmium		0.19	B	mg/kg	0.5417	74.1	NO	NO	No Action: No standard exceeded
OD-SO-B-01	Chromium		5.8		mg/kg	9.5027	234	NO	NO	No Action: No standard exceeded
OD-SO-B-01	Copper		4.1		mg/kg	9.1595	3130	NO	NO	No Action: No standard exceeded
OD-SO-B-01	Lead		2.2		mg/kg	7.6508	400	NO	NO	No Action: No standard exceeded

Exhibit H-1 (Table 5)
Analytical Sample Results

Location	Parameter		Value	Flags	Units	20,000 UTL[1]	NMED SSL[2]	>UTL?	>SSL?	Evaluation
OD-SO-B-01	Nickel		3.1		mg/kg	6.5898	1560	NO	NO	No Action: No standard exceeded
OD-SO-B-01	Selenium	<	0	U	mg/kg	2.2645	391	NO	NO	No Action: No standard exceeded
OD-SO-B-01	Silver		0.17	B*	mg/kg	0.7328	391	NO	NO	No Action: No standard exceeded
OD-SO-B-01	Mercury	<	0	U	mg/kg	0.0269	6.11	NO	NO	No Action: No standard exceeded
OD-SO-B-01	1,3,5-Trinitrobenzene	<	0	U	µg/kg	NA	NA	NO	NO	No Action: No standard exceeded
OD-SO-B-01	1,3-Dinitrobenzene	<	0	U	µg/kg	NA	NA	NO	NO	No Action: No standard exceeded
OD-SO-B-01	2,4-Dinitrotoluene	<	0	U	µg/kg	NA	120000	NO	NO	No Action: No standard exceeded
OD-SO-B-01	2,6-Dinitrotoluene	<	0	U	µg/kg	NA	NA	NO	NO	No Action: No standard exceeded
OD-SO-B-01	2-Amino-4,6-dinitrotoluene	<	0	U	µg/kg	NA	NA	NO	NO	No Action: No standard exceeded
OD-SO-B-01	4-Amino-2,6-dinitrotoluene	<	0	U	µg/kg	NA	NA	NO	NO	No Action: No standard exceeded
OD-SO-B-01	HMX	<	0	U	µg/kg	NA	3000000	NO	NO	No Action: No standard exceeded
OD-SO-B-01	m-Nitrotoluene	<	0	U	µg/kg	NA	410000	NO	NO	No Action: No standard exceeded
OD-SO-B-01	Nitrobenzene		90	B	µg/kg	NA	21800	NO	NO	No Action: No standard exceeded
OD-SO-B-01	o-Nitrotoluene	<	0	U	µg/kg	NA	410000	NO	NO	No Action: No standard exceeded
OD-SO-B-01	PETN	<	0	U	µg/kg	61300	NA	NO	NO	No Action: No standard exceeded
OD-SO-B-01	p-Nitrotoluene	<	0	U	µg/kg	NA	410000	NO	NO	No Action: No standard exceeded
OD-SO-B-01	RDX	<	0	U	µg/kg	NA	4420	NO	NO	No Action: No standard exceeded
OD-SO-B-01	Tetryl	<	0	U	µg/kg	NA	NA	NO	NO	No Action: No standard exceeded
OD-SO-B-01	TNT	<	0	U	µg/kg	NA	30000	NO	NO	No Action: No standard exceeded
OD-SO-B-01	Nitroglycerine	<	0	U	µg/kg	93.6772	347000	NO	NO	No Action: No standard exceeded
OD-SO-B-02	Antimony		0.58	BN	mg/kg	3.5279	31.3	NO	NO	No Action: No standard exceeded
OD-SO-B-02	Arsenic		1.2	B	mg/kg	1.4963	3.9	NO	NO	No Action: No standard exceeded
OD-SO-B-02	Barium		35.1		mg/kg	79.4971	5450	NO	NO	No Action: No standard exceeded
OD-SO-B-02	Beryllium		0.16	B	mg/kg	0.42	156	NO	NO	No Action: No standard exceeded
OD-SO-B-02	Cadmium		0.21	B	mg/kg	0.5417	74.1	NO	NO	No Action: No standard exceeded
OD-SO-B-02	Chromium		4.2		mg/kg	9.5027	234	NO	NO	No Action: No standard exceeded
OD-SO-B-02	Lead		2.2		mg/kg	7.6508	400	NO	NO	No Action: No standard exceeded
OD-SO-B-02	Nickel		2.2		mg/kg	6.5898	1560	NO	NO	No Action: No standard exceeded
OD-SO-B-02	Selenium	<	0	U	mg/kg	2.2645	391	NO	NO	No Action: No standard exceeded
OD-SO-B-02	Silver	<	0	U*	mg/kg	0.7328	391	NO	NO	No Action: No standard exceeded
OD-SO-B-02	Mercury	<	0	U	mg/kg	0.0269	6.11	NO	NO	No Action: No standard exceeded
OD-SO-B-02	1,3,5-Trinitrobenzene	<	0	U	µg/kg	NA	NA	NO	NO	No Action: No standard exceeded
OD-SO-B-02	1,3-Dinitrobenzene	<	0	U	µg/kg	NA	NA	NO	NO	No Action: No standard exceeded
OD-SO-B-02	2,4-Dinitrotoluene	<	0	U	µg/kg	NA	120000	NO	NO	No Action: No standard exceeded
OD-SO-B-02	2,6-Dinitrotoluene	<	0	U	µg/kg	NA	NA	NO	NO	No Action: No standard exceeded
OD-SO-B-02	2-Amino-4,6-dinitrotoluene	<	0	U	µg/kg	NA	NA	NO	NO	No Action: No standard exceeded
OD-SO-B-02	4-Amino-2,6-dinitrotoluene	<	0	U	µg/kg	NA	NA	NO	NO	No Action: No standard exceeded
OD-SO-B-02	HMX	<	0	U	µg/kg	NA	3000000	NO	NO	No Action: No standard exceeded
OD-SO-B-02	m-Nitrotoluene	<	0	U	µg/kg	NA	410000	NO	NO	No Action: No standard exceeded

Exhibit H-1 (Table 5)
Analytical Sample Results

Location	Parameter		Value	Flags	Units	20,000 UTL[1]	NMED SSL[2]	>UTL?	>SSL?	Evaluation
OD-SO-B-02	Nitrobenzene		85	JB	µg/kg	NA	21800	NO	NO	No Action: No standard exceeded
OD-SO-B-02	o-Nitrotoluene	<	0	U	µg/kg	NA	410000	NO	NO	No Action: No standard exceeded
OD-SO-B-02	PETN	<	0	U	µg/kg	61300	NA	NO	NO	No Action: No standard exceeded
OD-SO-B-02	p-Nitrotoluene	<	0	U	µg/kg	NA	410000	NO	NO	No Action: No standard exceeded
OD-SO-B-02	RDX		0		µg/kg	NA	4420	NO	NO	No Action: No standard exceeded
OD-SO-B-02	Tetryl	<	0	U	µg/kg	NA	NA	NO	NO	No Action: No standard exceeded
OD-SO-B-02	TNT	<	0	U	µg/kg	NA	30000	NO	NO	No Action: No standard exceeded
OD-SO-B-02	Nitroglycerine	<	0	U	µg/kg	93.6772	347000	NO	NO	No Action: No standard exceeded
OD-SO-B-03	Antimony		0.44	B	mg/kg	3.5279	31.3	NO	NO	No Action: No standard exceeded
OD-SO-B-03	Arsenic		1.1		mg/kg	1.4963	3.9	NO	NO	No Action: No standard exceeded
OD-SO-B-03	Barium		48		mg/kg	79.4971	5450	NO	NO	No Action: No standard exceeded
OD-SO-B-03	Beryllium		0.24		mg/kg	0.42	156	NO	NO	No Action: No standard exceeded
OD-SO-B-03	Cadmium		0.37	B	mg/kg	0.5417	74.1	NO	NO	No Action: No standard exceeded
OD-SO-B-03	Chromium		4.9		mg/kg	9.5027	234	NO	NO	No Action: No standard exceeded
OD-SO-B-03	Copper		9.1		mg/kg	9.1595	3130	NO	NO	No Action: No standard exceeded
OD-SO-B-03	Lead		4.3		mg/kg	7.6508	400	NO	NO	No Action: No standard exceeded
OD-SO-B-03	Nickel		3.3		mg/kg	6.5898	1560	NO	NO	No Action: No standard exceeded
OD-SO-B-03	Selenium	<	1.9	U	mg/kg	2.2645	391	NO	NO	No Action: No standard exceeded
OD-SO-B-03	Silver		0.29	U*	mg/kg	0.7328	391	NO	NO	No Action: No standard exceeded
OD-SO-B-03	1,3,5-Trinitrobenzene	<	100	U	µg/kg	NA	NA	NO	NO	No Action: No standard exceeded
OD-SO-B-03	1,3-Dinitrobenzene	<	100	U	µg/kg	NA	NA	NO	NO	No Action: No standard exceeded
OD-SO-B-03	2,4-Dinitrotoluene	<	100	U	µg/kg	NA	120000	NO	NO	No Action: No standard exceeded
OD-SO-B-03	2,6-Dinitrotoluene	<	100	U	µg/kg	NA	NA	NO	NO	No Action: No standard exceeded
OD-SO-B-03	2-Amino-4,6-dinitrotoluene	<	100	U	µg/kg	NA	NA	NO	NO	No Action: No standard exceeded
OD-SO-B-03	4-Amino-2,6-dinitrotoluene	<	100	U	µg/kg	NA	NA	NO	NO	No Action: No standard exceeded
OD-SO-B-03	HMX	<	200	U	µg/kg	NA	3000000	NO	NO	No Action: No standard exceeded
OD-SO-B-03	m-Nitrotoluene	<	200	U	µg/kg	NA	410000	NO	NO	No Action: No standard exceeded
OD-SO-B-03	Nitrobenzene	<	100	U	µg/kg	NA	21800	NO	NO	No Action: No standard exceeded
OD-SO-B-03	o-Nitrotoluene	<	200	U	µg/kg	NA	410000	NO	NO	No Action: No standard exceeded
OD-SO-B-03	PETN	<	500	U	µg/kg	61300	NA	NO	NO	No Action: No standard exceeded
OD-SO-B-03	p-Nitrotoluene		360	B	µg/kg	NA	410000	NO	NO	No Action: No standard exceeded
OD-SO-B-03	RDX		3800		µg/kg	NA	4420	NO	NO	No Action: No standard exceeded
OD-SO-B-03	Tetryl	<	30	U	µg/kg	NA	NA	NO	NO	No Action: No standard exceeded
OD-SO-B-03	TNT	<	100	U	µg/kg	NA	30000	NO	NO	No Action: No standard exceeded
OD-SO-B-04	Antimony		0.38	BN	mg/kg	3.5279	31.3	NO	NO	No Action: No standard exceeded
OD-SO-B-04	Arsenic		0.97	B	mg/kg	1.4963	3.9	NO	NO	No Action: No standard exceeded
OD-SO-B-04	Barium		35.8		mg/kg	79.4971	5450	NO	NO	No Action: No standard exceeded
OD-SO-B-04	Beryllium		0.14	B	mg/kg	0.42	156	NO	NO	No Action: No standard exceeded
OD-SO-B-04	Cadmium		0.22	B	mg/kg	0.5417	74.1	NO	NO	No Action: No standard exceeded

Exhibit H-1 (Table 5)
Analytical Sample Results

Location	Parameter		Value	Flags	Units	20,000 UTL[1]	NMED SSL[2]	>UTL?	>SSL?	Evaluation
OD-SO-B-04	Chromium		3.4		mg/kg	9.5027	234	NO	NO	No Action: No standard exceeded
OD-SO-B-04	Copper		6.9		mg/kg	9.1595	3130	NO	NO	No Action: No standard exceeded
OD-SO-B-04	Lead		3.3		mg/kg	7.6508	400	NO	NO	No Action: No standard exceeded
OD-SO-B-04	Nickel		2.7		mg/kg	6.5898	1560	NO	NO	No Action: No standard exceeded
OD-SO-B-04	Selenium	<	0	U	mg/kg	2.2645	391	NO	NO	No Action: No standard exceeded
OD-SO-B-04	Silver	<	0	U*	mg/kg	0.7328	391	NO	NO	No Action: No standard exceeded
OD-SO-B-04	Mercury	<	0	U	mg/kg	0.0269	6.11	NO	NO	No Action: No standard exceeded
OD-SO-B-04	1,3,5-Trinitrobenzene	<	0	U	µg/kg	NA	NA	NO	NO	No Action: No standard exceeded
OD-SO-B-04	1,3-Dinitrobenzene	<	0	U	µg/kg	NA	NA	NO	NO	No Action: No standard exceeded
OD-SO-B-04	2,4-Dinitrotoluene	<	0	U	µg/kg	NA	120000	NO	NO	No Action: No standard exceeded
OD-SO-B-04	2,6-Dinitrotoluene	<	0	U	µg/kg	NA	NA	NO	NO	No Action: No standard exceeded
OD-SO-B-04	2-Amino-4,6-dinitrotoluene	<	0	U	µg/kg	NA	NA	NO	NO	No Action: No standard exceeded
OD-SO-B-04	4-Amino-2,6-dinitrotoluene	<	0	U	µg/kg	NA	NA	NO	NO	No Action: No standard exceeded
OD-SO-B-04	HMX	<	0	U	µg/kg	NA	3000000	NO	NO	No Action: No standard exceeded
OD-SO-B-04	m-Nitrotoluene	<	0	U	µg/kg	NA	410000	NO	NO	No Action: No standard exceeded
OD-SO-B-04	Nitrobenzene		0	B	µg/kg	NA	21800	NO	NO	No Action: No standard exceeded
OD-SO-B-04	o-Nitrotoluene	<	0	U	µg/kg	NA	410000	NO	NO	No Action: No standard exceeded
OD-SO-B-04	PETN	<	0	U	µg/kg	61300	NA	NO	NO	No Action: No standard exceeded
OD-SO-B-04	p-Nitrotoluene	<	0	U	µg/kg	NA	410000	NO	NO	No Action: No standard exceeded
OD-SO-B-04	RDX		50	J	µg/kg	NA	4420	NO	NO	No Action: No standard exceeded
OD-SO-B-04	Tetryl	<	0	U	µg/kg	NA	NA	NO	NO	No Action: No standard exceeded
OD-SO-B-04	TNT	<	0	U	µg/kg	NA	30000	NO	NO	No Action: No standard exceeded
OD-SO-B-04	Nitroglycerine	<	0	U	µg/kg	93.6772	347000	NO	NO	No Action: No standard exceeded
OD-SO-C-01	Antimony		0	UN	mg/kg	3.5279	31.3	NO	NO	No Action: No standard exceeded
OD-SO-C-01	Arsenic		1.3	B	mg/kg	1.4963	3.9	NO	NO	No Action: No standard exceeded
OD-SO-C-01	Barium		59.6		mg/kg	79.4971	5450	NO	NO	No Action: No standard exceeded
OD-SO-C-01	Beryllium		0.31		mg/kg	0.42	156	NO	NO	No Action: No standard exceeded
OD-SO-C-01	Cadmium		0.29	B	mg/kg	0.5417	74.1	NO	NO	No Action: No standard exceeded
OD-SO-C-01	Chromium		6.4		mg/kg	9.5027	234	NO	NO	No Action: No standard exceeded
OD-SO-C-01	Copper		9		mg/kg	9.1595	3130	NO	NO	No Action: No standard exceeded
OD-SO-C-01	Lead		5.5		mg/kg	7.6508	400	NO	NO	No Action: No standard exceeded
OD-SO-C-01	Nickel		4.4		mg/kg	6.5898	1560	NO	NO	No Action: No standard exceeded
OD-SO-C-01	Selenium	<	0	U	mg/kg	2.2645	391	NO	NO	No Action: No standard exceeded
OD-SO-C-01	Silver		0.15	B*	mg/kg	0.7328	391	NO	NO	No Action: No standard exceeded
OD-SO-C-01	Mercury	<	0	U	mg/kg	0.0269	6.11	NO	NO	No Action: No standard exceeded
OD-SO-C-01	1,3,5-Trinitrobenzene	<	0	U	µg/kg	NA	NA	NO	NO	No Action: No standard exceeded
OD-SO-C-01	1,3-Dinitrobenzene	<	0	U	µg/kg	NA	NA	NO	NO	No Action: No standard exceeded
OD-SO-C-01	2,4-Dinitrotoluene	<	0	U	µg/kg	NA	120000	NO	NO	No Action: No standard exceeded
OD-SO-C-01	2,6-Dinitrotoluene	<	0	U	µg/kg	NA	NA	NO	NO	No Action: No standard exceeded

Exhibit H-1 (Table 5)
Analytical Sample Results

Location	Parameter		Value	Flags	Units	20,000 UTL[1]	NMED SSL[2]	>UTL?	>SSL?	Evaluation
OD-SO-C-01	2-Amino-4,6-dinitrotoluene	<	0	U	µg/kg	NA	NA	NO	NO	No Action: No standard exceeded
OD-SO-C-01	4-Amino-2,6-dinitrotoluene	<	0	U	µg/kg	NA	NA	NO	NO	No Action: No standard exceeded
OD-SO-C-01	HMX	<	0	U	µg/kg	NA	3000000	NO	NO	No Action: No standard exceeded
OD-SO-C-01	m-Nitrotoluene	<	0	U	µg/kg	NA	410000	NO	NO	No Action: No standard exceeded
OD-SO-C-01	Nitrobenzene		71	JB	µg/kg	NA	21800	NO	NO	No Action: No standard exceeded
OD-SO-C-01	o-Nitrotoluene	<	0	U	µg/kg	NA	410000	NO	NO	No Action: No standard exceeded
OD-SO-C-01	PETN	<	0	U	µg/kg	61300	NA	NO	NO	No Action: No standard exceeded
OD-SO-C-01	p-Nitrotoluene	<	0	U	µg/kg	NA	410000	NO	NO	No Action: No standard exceeded
OD-SO-C-01	RDX	<	0	U	µg/kg	NA	4420	NO	NO	No Action: No standard exceeded
OD-SO-C-01	Tetryl	<	0	U	µg/kg	NA	NA	NO	NO	No Action: No standard exceeded
OD-SO-C-01	TNT	<	0	U	µg/kg	NA	30000	NO	NO	No Action: No standard exceeded
OD-SO-C-01	Nitroglycerine	<	0	U	µg/kg	93.6772	347000	NO	NO	No Action: No standard exceeded
OD-SO-C-02	Antimony	<	0	UN	mg/kg	3.5279	31.3	NO	NO	No Action: No standard exceeded
OD-SO-C-02	Arsenic		1.3	B	mg/kg	1.4963	3.9	NO	NO	No Action: No standard exceeded
OD-SO-C-02	Barium		29.1		mg/kg	79.4971	5450	NO	NO	No Action: No standard exceeded
OD-SO-C-02	Beryllium		0.12	B	mg/kg	0.42	156	NO	NO	No Action: No standard exceeded
OD-SO-C-02	Cadmium		0.11	B	mg/kg	0.5417	74.1	NO	NO	No Action: No standard exceeded
OD-SO-C-02	Chromium		2.7		mg/kg	9.5027	234	NO	NO	No Action: No standard exceeded
OD-SO-C-02	Copper		3.9		mg/kg	9.1595	3130	NO	NO	No Action: No standard exceeded
OD-SO-C-02	Lead		1.5		mg/kg	7.6508	400	NO	NO	No Action: No standard exceeded
OD-SO-C-02	Nickel		1.7		mg/kg	6.5898	1560	NO	NO	No Action: No standard exceeded
OD-SO-C-02	Selenium	<	0	U	mg/kg	2.2645	391	NO	NO	No Action: No standard exceeded
OD-SO-C-02	Silver		0.13	B*	mg/kg	0.7328	391	NO	NO	No Action: No standard exceeded
OD-SO-C-02	Mercury	<	0	U	mg/kg	0.0269	6.11	NO	NO	No Action: No standard exceeded
OD-SO-C-02	1,3,5-Trinitrobenzene	<	0	U	µg/kg	NA	NA	NO	NO	No Action: No standard exceeded
OD-SO-C-02	1,3-Dinitrobenzene	<	0	U	µg/kg	NA	NA	NO	NO	No Action: No standard exceeded
OD-SO-C-02	2,4-Dinitrotoluene	<	0	U	µg/kg	NA	120000	NO	NO	No Action: No standard exceeded
OD-SO-C-02	2,6-Dinitrotoluene	<	0	U	µg/kg	NA	NA	NO	NO	No Action: No standard exceeded
OD-SO-C-02	2-Amino-4,6-dinitrotoluene	<	0	U	µg/kg	NA	NA	NO	NO	No Action: No standard exceeded
OD-SO-C-02	4-Amino-2,6-dinitrotoluene	<	0	U	µg/kg	NA	NA	NO	NO	No Action: No standard exceeded
OD-SO-C-02	HMX	<	0	U	µg/kg	NA	3000000	NO	NO	No Action: No standard exceeded
OD-SO-C-02	m-Nitrotoluene	<	0	U	µg/kg	NA	410000	NO	NO	No Action: No standard exceeded
OD-SO-C-02	Nitrobenzene		40	B	µg/kg	NA	21800	NO	NO	No Action: No standard exceeded
OD-SO-C-02	o-Nitrotoluene	<	0	U	µg/kg	NA	410000	NO	NO	No Action: No standard exceeded
OD-SO-C-02	PETN	<	0	U	µg/kg	61300	NA	NO	NO	No Action: No standard exceeded
OD-SO-C-02	p-Nitrotoluene	<	0	U	µg/kg	NA	410000	NO	NO	No Action: No standard exceeded
OD-SO-C-02	RDX	<	0	U	µg/kg	NA	4420	NO	NO	No Action: No standard exceeded
OD-SO-C-02	Tetryl	<	0	U	µg/kg	NA	NA	NO	NO	No Action: No standard exceeded
OD-SO-C-02	TNT	<	0	U	µg/kg	NA	30000	NO	NO	No Action: No standard exceeded

Exhibit H-1 (Table 5)
Analytical Sample Results

Location	Parameter		Value	Flags	Units	20,000 UTL[1]	NMED SSL[2]	>UTL?	>SSL?	Evaluation
OD-SO-C-02	Nitroglycerine	<	0	U	µg/kg	93.6772	347000	NO	NO	No Action: No standard exceeded
OD-SO-C-03	Antimony	<	0	UN	mg/kg	3.5279	31.3	NO	NO	No Action: No standard exceeded
OD-SO-C-03	Barium		70.7		mg/kg	79.4971	5450	NO	NO	No Action: No standard exceeded
OD-SO-C-03	Beryllium		0.4		mg/kg	0.42	156	NO	NO	No Action: No standard exceeded
OD-SO-C-03	Chromium		8.2		mg/kg	9.5027	234	NO	NO	No Action: No standard exceeded
OD-SO-C-03	Nickel		5.9		mg/kg	6.5898	1560	NO	NO	No Action: No standard exceeded
OD-SO-C-03	Selenium	<	0	U	mg/kg	2.2645	391	NO	NO	No Action: No standard exceeded
OD-SO-C-03	Silver		0.17	B*	mg/kg	0.7328	391	NO	NO	No Action: No standard exceeded
OD-SO-C-03	Mercury	<	0	U	mg/kg	0.0269	6.11	NO	NO	No Action: No standard exceeded
OD-SO-C-03	1,3,5-Trinitrobenzene	<	0	U	µg/kg	NA	NA	NO	NO	No Action: No standard exceeded
OD-SO-C-03	1,3-Dinitrobenzene	<	0	U	µg/kg	NA	NA	NO	NO	No Action: No standard exceeded
OD-SO-C-03	2,4-Dinitrotoluene	<	0	U	µg/kg	NA	120000	NO	NO	No Action: No standard exceeded
OD-SO-C-03	2,6-Dinitrotoluene	<	0	U	µg/kg	NA	NA	NO	NO	No Action: No standard exceeded
OD-SO-C-03	2-Amino-4,6-dinitrotoluene	<	0	U	µg/kg	NA	NA	NO	NO	No Action: No standard exceeded
OD-SO-C-03	4-Amino-2,6-dinitrotoluene	<	0	U	µg/kg	NA	NA	NO	NO	No Action: No standard exceeded
OD-SO-C-03	HMX	<	0	U	µg/kg	NA	3000000	NO	NO	No Action: No standard exceeded
OD-SO-C-03	m-Nitrotoluene	<	0	U	µg/kg	NA	410000	NO	NO	No Action: No standard exceeded
OD-SO-C-03	Nitrobenzene		46	JB	µg/kg	NA	21800	NO	NO	No Action: No standard exceeded
OD-SO-C-03	o-Nitrotoluene	<	0	U	µg/kg	NA	410000	NO	NO	No Action: No standard exceeded
OD-SO-C-03	PETN	<	0	U	µg/kg	61300	NA	NO	NO	No Action: No standard exceeded
OD-SO-C-03	p-Nitrotoluene	<	0	U	µg/kg	NA	410000	NO	NO	No Action: No standard exceeded
OD-SO-C-03	RDX	<	0	U	µg/kg	NA	4420	NO	NO	No Action: No standard exceeded
OD-SO-C-03	Tetryl	<	0	U	µg/kg	NA	NA	NO	NO	No Action: No standard exceeded
OD-SO-C-03	TNT	<	0	U	µg/kg	NA	30000	NO	NO	No Action: No standard exceeded
OD-SO-C-03	Nitroglycerine	<	0	U	µg/kg	93.6772	347000	NO	NO	No Action: No standard exceeded
OD-SO-C-04	Antimony		0.39	BN	mg/kg	3.5279	31.3	NO	NO	No Action: No standard exceeded
OD-SO-C-04	Arsenic		1.1	B	mg/kg	1.4963	3.9	NO	NO	No Action: No standard exceeded
OD-SO-C-04	Barium		56.6		mg/kg	79.4971	5450	NO	NO	No Action: No standard exceeded
OD-SO-C-04	Beryllium		0.25		mg/kg	0.42	156	NO	NO	No Action: No standard exceeded
OD-SO-C-04	Chromium		5.5		mg/kg	9.5027	234	NO	NO	No Action: No standard exceeded
OD-SO-C-04	Copper		8.5		mg/kg	9.1595	3130	NO	NO	No Action: No standard exceeded
OD-SO-C-04	Lead		5		mg/kg	7.6508	400	NO	NO	No Action: No standard exceeded
OD-SO-C-04	Nickel		3.8		mg/kg	6.5898	1560	NO	NO	No Action: No standard exceeded
OD-SO-C-04	Selenium	<	0	U	mg/kg	2.2645	391	NO	NO	No Action: No standard exceeded
OD-SO-C-04	Silver		0.18	B*	mg/kg	0.7328	391	NO	NO	No Action: No standard exceeded
OD-SO-C-04	Mercury	<	0	U	mg/kg	0.0269	6.11	NO	NO	No Action: No standard exceeded
OD-SO-C-04	1,3,5-Trinitrobenzene	<	0	U	µg/kg	NA	NA	NO	NO	No Action: No standard exceeded
OD-SO-C-04	1,3-Dinitrobenzene	<	0	U	µg/kg	NA	NA	NO	NO	No Action: No standard exceeded
OD-SO-C-04	2,4-Dinitrotoluene	<	0	U	µg/kg	NA	120000	NO	NO	No Action: No standard exceeded

Exhibit H-1 (Table 5)
Analytical Sample Results

Location	Parameter		Value	Flags	Units	20,000 UTL[1]	NMED SSL[2]	>UTL?	>SSL?	Evaluation
OD-SO-C-04	2,6-Dinitrotoluene	<	0	U	µg/kg	NA	NA	NO	NO	No Action: No standard exceeded
OD-SO-C-04	2-Amino-4,6-dinitrotoluene	<	0	U	µg/kg	NA	NA	NO	NO	No Action: No standard exceeded
OD-SO-C-04	4-Amino-2,6-dinitrotoluene	<	0	U	µg/kg	NA	NA	NO	NO	No Action: No standard exceeded
OD-SO-C-04	HMX	<	0	U	µg/kg	NA	3000000	NO	NO	No Action: No standard exceeded
OD-SO-C-04	m-Nitrotoluene	<	0	U	µg/kg	NA	410000	NO	NO	No Action: No standard exceeded
OD-SO-C-04	Nitrobenzene		85	JB	µg/kg	NA	21800	NO	NO	No Action: No standard exceeded
OD-SO-C-04	o-Nitrotoluene	<	0	U	µg/kg	NA	410000	NO	NO	No Action: No standard exceeded
OD-SO-C-04	PETN	<	0	U	µg/kg	61300	NA	NO	NO	No Action: No standard exceeded
OD-SO-C-04	p-Nitrotoluene	<	0	U	µg/kg	NA	410000	NO	NO	No Action: No standard exceeded
OD-SO-C-04	RDX	<	0	U	µg/kg	NA	4420	NO	NO	No Action: No standard exceeded
OD-SO-C-04	Tetryl	<	0	U	µg/kg	NA	NA	NO	NO	No Action: No standard exceeded
OD-SO-C-04	TNT	<	0	U	µg/kg	NA	30000	NO	NO	No Action: No standard exceeded
OD-SO-C-04	Nitroglycerine	<	0	U	µg/kg	93.6772	347000	NO	NO	No Action: No standard exceeded
[1] 20,000 UTL:	Final Background Study, 20000-Pound Open Detonation Unit, December 1997									
[2] NMED SSL:	New Mexico Environment Department Soil Screening Levels, February 2004, Revision 2									

Exhibit H-1 (Table 6)
Analytical Sample Results

Location	Parameter		Value	Flags	Units	20,000 UTL[1]	NMED SSL[2]	>UTL?	>SSL?	Evaluation
OD-SO-A-01	Mercury	<	0.039	U	mg/kg	0.0269	6.11	YES	NO	No Action: result flagged "U"
OD-SO-A-02	Copper		13.4		mg/kg	9.1595	3130	YES	NO	No Action:UTL exceeded but not SSL
OD-SO-A-02	Mercury	<	0.036	U	mg/kg	0.0269	6.11	YES	NO	No Action: result flagged "U"
OD-SO-A-03	Copper		14.1		mg/kg	9.1595	3130	YES	NO	No Action:UTL exceeded but not SSL
OD-SO-A-03	Mercury	<	0.034	U	mg/kg	0.0269	6.11	YES	NO	No Action: result flagged "U"
OD-SO-A-04	Cadmium		2.5		mg/kg	0.5417	74.1	YES	NO	No Action:UTL exceeded but not SSL
OD-SO-A-04	Copper		9.3		mg/kg	9.1595	3130	YES	NO	No Action:UTL exceeded but not SSL
OD-SO-A-04	Mercury		0.04		mg/kg	0.0269	6.11	YES	NO	No Action:UTL exceeded but not SSL
OD-SO-B-01	Mercury	<	0.033	U	mg/kg	0.0269	6.11	YES	NO	No Action: result flagged "U"
OD-SO-B-02	Mercury	<	0.036	U	mg/kg	0.0269	6.11	YES	NO	No Action: result flagged "U"
OD-SO-B-03	Mercury	<	0.033	U	mg/kg	0.0269	6.11	YES	NO	No Action: result flagged "U"
OD-SO-B-03A	Mercury	<	0.037	U	mg/kg	0.0269	6.11	YES	NO	No Action: result flagged "U"
OD-SO-B-04	Mercury	<	0.036	U	mg/kg	0.0269	6.11	YES	NO	No Action: result flagged "U"
OD-SO-C-01	Arsenic		1.5	B	mg/kg	1.4963	3.9	YES	NO	No Action: result flagged "B"
OD-SO-C-01	Cadmium		1.8		mg/kg	0.5417	74.1	YES	NO	No Action:UTL exceeded but not SSL
OD-SO-C-01	Copper		11.4		mg/kg	9.1595	3130	YES	NO	No Action:UTL exceeded but not SSL
OD-SO-C-01	Lead		11.4		mg/kg	7.6508	400	YES	NO	No Action:UTL exceeded but not SSL
OD-SO-C-01	Mercury	<	0.036	U	mg/kg	0.0269	6.11	YES	NO	No Action: result flagged "U"
OD-SO-C-02	Cadmium		0.94		mg/kg	0.5417	74.1	YES	NO	No Action:UTL exceeded but not SSL
OD-SO-C-02	Lead		7.8		mg/kg	7.6508	400	YES	NO	No Action:UTL exceeded but not SSL
OD-SO-C-02	Mercury	<	0.037	U	mg/kg	0.0269	6.11	YES	NO	No Action: result flagged "U"
OD-SO-C-03	Copper		37.5		mg/kg	9.1595	3130	YES	NO	No Action:UTL exceeded but not SSL
OD-SO-C-03	Mercury	<	0.042	U	mg/kg	0.0269	6.11	YES	NO	No Action: result flagged "U"
OD-SO-C-04	Arsenic		2.2		mg/kg	1.4963	3.9	YES	NO	No Action:UTL exceeded but not SSL
OD-SO-C-04	Beryllium		0.47		mg/kg	0.42	156	YES	NO	No Action:UTL exceeded but not SSL
OD-SO-C-04	Cadmium		0.6		mg/kg	0.5417	74.1	YES	NO	No Action:UTL exceeded but not SSL
OD-SO-C-04	Copper		13.9		mg/kg	9.1595	3130	YES	NO	No Action:UTL exceeded but not SSL
OD-SO-C-04	Lead		12.3		mg/kg	7.6508	400	YES	NO	No Action:UTL exceeded but not SSL
OD-SO-A-01	Antimony		0.39	BN	mg/kg	3.5279	31.3	NO	NO	No Action: No standard exceeded
OD-SO-A-01	Arsenic		1.1	B	mg/kg	1.4963	3.9	NO	NO	No Action: No standard exceeded
OD-SO-A-01	Barium		33.6		mg/kg	79.4971	5450	NO	NO	No Action: No standard exceeded
OD-SO-A-01	Beryllium		0.13	B	mg/kg	0.42	156	NO	NO	No Action: No standard exceeded
OD-SO-A-01	Cadmium		0.31	B	mg/kg	0.5417	74.1	NO	NO	No Action: No standard exceeded
OD-SO-A-01	Chromium		5.5		mg/kg	9.5027	234	NO	NO	No Action: No standard exceeded
OD-SO-A-01	Copper		9		mg/kg	9.1595	3130	NO	NO	No Action: No standard exceeded
OD-SO-A-01	Lead		4.2		mg/kg	7.6508	400	NO	NO	No Action: No standard exceeded
OD-SO-A-01	Nickel		4.1		mg/kg	6.5898	1560	NO	NO	No Action: No standard exceeded
OD-SO-A-01	Selenium	<	2.1	U	mg/kg	2.2645	391	NO	NO	No Action: No standard exceeded
OD-SO-A-01	Silver	<	0.31	U	mg/kg	0.7328	391	NO	NO	No Action: No standard exceeded
OD-SO-A-01	1,3,5-Trinitrobenze	<	100	U	µg/kg	NA	NA	NO	NO	No Action: No standard exceeded
OD-SO-A-01	1,3-Dinitrobenzene	<	100	U	µg/kg	NA	NA	NO	NO	No Action: No standard exceeded
OD-SO-A-01	2,4-Dinitrotoluene		55	J	µg/kg	NA	120000	NO	NO	No Action: No standard exceeded
OD-SO-A-01	2,6-Dinitrotoluene	<	100	U	µg/kg	NA	NA	NO	NO	No Action: No standard exceeded

Exhibit H-1 (Table 6)
Analytical Sample Results

Location	Parameter		Value	Flags	Units	20,000 UTL[1]	NMED SSL[2]	>UTL?	>SSL?	Evaluation
OD-SO-A-01	2-Amino-4,6-dinitro	<	100	U	µg/kg	NA	NA	NO	NO	No Action: No standard exceeded
OD-SO-A-01	4-Amino-2,6-dinitro	<	100	U	µg/kg	NA	NA	NO	NO	No Action: No standard exceeded
OD-SO-A-01	HMX		90	J	µg/kg	NA	3000000	NO	NO	No Action: No standard exceeded
OD-SO-A-01	m-Nitrotoluene	<	200	U	µg/kg	NA	410000	NO	NO	No Action: No standard exceeded
OD-SO-A-01	Nitrobenzene		39	J	µg/kg	NA	21800	NO	NO	No Action: No standard exceeded
OD-SO-A-01	Nitroglycerine	<	6,300	U	µg/kg	93677.2	347000	NO	NO	No Action: No standard exceeded
OD-SO-A-01	o-Nitrotoluene	<	200	U	µg/kg	NA	410000	NO	NO	No Action: No standard exceeded
OD-SO-A-01	PETN	<	500	U	µg/kg	61300	NA	NO	NO	No Action: No standard exceeded
OD-SO-A-01	p-Nitrotoluene	<	200	U	µg/kg	NA	410000	NO	NO	No Action: No standard exceeded
OD-SO-A-01	RDX		1,400		µg/kg	NA	4420	NO	NO	No Action: No standard exceeded
OD-SO-A-01	Tetryl	<	200	U	µg/kg	NA	NA	NO	NO	No Action: No standard exceeded
OD-SO-A-01	TNT		590		µg/kg	NA	30000	NO	NO	No Action: No standard exceeded
OD-SO-A-02	Antimony	<	1.8	UN	mg/kg	3.5279	31.3	NO	NO	No Action: No standard exceeded
OD-SO-A-02	Arsenic		1.1	B	mg/kg	1.4963	3.9	NO	NO	No Action: No standard exceeded
OD-SO-A-02	Barium		31.5		mg/kg	79.4971	5450	NO	NO	No Action: No standard exceeded
OD-SO-A-02	Beryllium		0.13	B	mg/kg	0.42	156	NO	NO	No Action: No standard exceeded
OD-SO-A-02	Cadmium		0.21	B	mg/kg	0.5417	74.1	NO	NO	No Action: No standard exceeded
OD-SO-A-02	Chromium		4.4		mg/kg	9.5027	234	NO	NO	No Action: No standard exceeded
OD-SO-A-02	Lead		5.5		mg/kg	7.6508	400	NO	NO	No Action: No standard exceeded
OD-SO-A-02	Nickel		2.2		mg/kg	6.5898	1560	NO	NO	No Action: No standard exceeded
OD-SO-A-02	Selenium	<	1.8	U	mg/kg	2.2645	391	NO	NO	No Action: No standard exceeded
OD-SO-A-02	Silver	<	0.27	U	mg/kg	0.7328	391	NO	NO	No Action: No standard exceeded
OD-SO-A-02	1,3,5-Trinitrobenze	<	100	U	µg/kg	NA	NA	NO	NO	No Action: No standard exceeded
OD-SO-A-02	1,3-Dinitrobenzene	<	100	U	µg/kg	NA	NA	NO	NO	No Action: No standard exceeded
OD-SO-A-02	2,4-Dinitrotoluene	<	100	U	µg/kg	NA	120000	NO	NO	No Action: No standard exceeded
OD-SO-A-02	2,6-Dinitrotoluene	<	100	U	µg/kg	NA	NA	NO	NO	No Action: No standard exceeded
OD-SO-A-02	2-Amino-4,6-dinitro	<	100	U	µg/kg	NA	NA	NO	NO	No Action: No standard exceeded
OD-SO-A-02	4-Amino-2,6-dinitro	<	100	U	µg/kg	NA	NA	NO	NO	No Action: No standard exceeded
OD-SO-A-02	HMX	<	200	U	µg/kg	NA	3000000	NO	NO	No Action: No standard exceeded
OD-SO-A-02	m-Nitrotoluene	<	200	U	µg/kg	NA	410000	NO	NO	No Action: No standard exceeded
OD-SO-A-02	Nitrobenzene	<	100	U	µg/kg	NA	21800	NO	NO	No Action: No standard exceeded
OD-SO-A-02	Nitroglycerine		9,700		µg/kg	93677.2	347000	NO	NO	No Action: No standard exceeded
OD-SO-A-02	o-Nitrotoluene	<	200	U	µg/kg	NA	410000	NO	NO	No Action: No standard exceeded
OD-SO-A-02	PETN	<	500	U	µg/kg	61300	NA	NO	NO	No Action: No standard exceeded
OD-SO-A-02	p-Nitrotoluene	<	200	U	µg/kg	NA	410000	NO	NO	No Action: No standard exceeded
OD-SO-A-02	RDX	<	200	U	µg/kg	NA	4420	NO	NO	No Action: No standard exceeded
OD-SO-A-02	Tetryl	<	200	U	µg/kg	NA	NA	NO	NO	No Action: No standard exceeded
OD-SO-A-02	TNT		95	J	µg/kg	NA	30000	NO	NO	No Action: No standard exceeded
OD-SO-A-03	Antimony		0.45	BN	mg/kg	3.5279	31.3	NO	NO	No Action: No standard exceeded
OD-SO-A-03	Arsenic		1.2	B	mg/kg	1.4963	3.9	NO	NO	No Action: No standard exceeded
OD-SO-A-03	Barium		29.5		mg/kg	79.4971	5450	NO	NO	No Action: No standard exceeded
OD-SO-A-03	Beryllium		0.12	B	mg/kg	0.42	156	NO	NO	No Action: No standard exceeded
OD-SO-A-03	Cadmium		0.2	B	mg/kg	0.5417	74.1	NO	NO	No Action: No standard exceeded

Exhibit H-1 (Table 6)
Analytical Sample Results

Location	Parameter		Value	Flags	Units	20,000 UTL[1]	NMED SSL[2]	>UTL?	>SSL?	Evaluation
OD-SO-A-03	Chromium		3.9		mg/kg	9.5027	234	NO	NO	No Action: No standard exceeded
OD-SO-A-03	Lead		2.4		mg/kg	7.6508	400	NO	NO	No Action: No standard exceeded
OD-SO-A-03	Nickel		2.4		mg/kg	6.5898	1560	NO	NO	No Action: No standard exceeded
OD-SO-A-03	Selenium	<	2	U	mg/kg	2.2645	391	NO	NO	No Action: No standard exceeded
OD-SO-A-03	Silver	<	0.31	U	mg/kg	0.7328	391	NO	NO	No Action: No standard exceeded
OD-SO-A-03	1,3,5-Trinitrobenze	<	100	U	µg/kg	NA	NA	NO	NO	No Action: No standard exceeded
OD-SO-A-03	1,3-Dinitrobenzene	<	100	U	µg/kg	NA	NA	NO	NO	No Action: No standard exceeded
OD-SO-A-03	2,4-Dinitrotoluene	<	100	U	µg/kg	NA	120000	NO	NO	No Action: No standard exceeded
OD-SO-A-03	2,6-Dinitrotoluene	<	100	U	µg/kg	NA	NA	NO	NO	No Action: No standard exceeded
OD-SO-A-03	2-Amino-4,6-dinitro	<	100	U	µg/kg	NA	NA	NO	NO	No Action: No standard exceeded
OD-SO-A-03	4-Amino-2,6-dinitro	<	100	U	µg/kg	NA	NA	NO	NO	No Action: No standard exceeded
OD-SO-A-03	HMX	<	200	U	µg/kg	NA	3000000	NO	NO	No Action: No standard exceeded
OD-SO-A-03	m-Nitrotoluene	<	200	U	µg/kg	NA	410000	NO	NO	No Action: No standard exceeded
OD-SO-A-03	Nitrobenzene		38	J	µg/kg	NA	21800	NO	NO	No Action: No standard exceeded
OD-SO-A-03	Nitroglycerine	<	5,900	U	µg/kg	93677.2	347000	NO	NO	No Action: No standard exceeded
OD-SO-A-03	o-Nitrotoluene	<	200	U	µg/kg	NA	410000	NO	NO	No Action: No standard exceeded
OD-SO-A-03	PETN	<	500	U	µg/kg	61300	NA	NO	NO	No Action: No standard exceeded
OD-SO-A-03	p-Nitrotoluene	<	200	U	µg/kg	NA	410000	NO	NO	No Action: No standard exceeded
OD-SO-A-03	RDX		500		µg/kg	NA	4420	NO	NO	No Action: No standard exceeded
OD-SO-A-03	Tetryl	<	200	U	µg/kg	NA	NA	NO	NO	No Action: No standard exceeded
OD-SO-A-03	TNT	<	100	U	µg/kg	NA	30000	NO	NO	No Action: No standard exceeded
OD-SO-A-04	Antimony		0.58	BN	mg/kg	3.5279	31.3	NO	NO	No Action: No standard exceeded
OD-SO-A-04	Arsenic		1.1	B	mg/kg	1.4963	3.9	NO	NO	No Action: No standard exceeded
OD-SO-A-04	Barium		30.8		mg/kg	79.4971	5450	NO	NO	No Action: No standard exceeded
OD-SO-A-04	Beryllium		0.16	B	mg/kg	0.42	156	NO	NO	No Action: No standard exceeded
OD-SO-A-04	Chromium		3.9		mg/kg	9.5027	234	NO	NO	No Action: No standard exceeded
OD-SO-A-04	Lead		7.3		mg/kg	7.6508	400	NO	NO	No Action: No standard exceeded
OD-SO-A-04	Nickel		2.6		mg/kg	6.5898	1560	NO	NO	No Action: No standard exceeded
OD-SO-A-04	Selenium	<	2	U	mg/kg	2.2645	391	NO	NO	No Action: No standard exceeded
OD-SO-A-04	Silver	<	0.29	U	mg/kg	0.7328	391	NO	NO	No Action: No standard exceeded
OD-SO-A-04	1,3,5-Trinitrobenze	<	100	U	µg/kg	NA	NA	NO	NO	No Action: No standard exceeded
OD-SO-A-04	1,3-Dinitrobenzene	<	100	U	µg/kg	NA	NA	NO	NO	No Action: No standard exceeded
OD-SO-A-04	2,4-Dinitrotoluene	<	100	U	µg/kg	NA	120000	NO	NO	No Action: No standard exceeded
OD-SO-A-04	2,6-Dinitrotoluene	<	100	U	µg/kg	NA	NA	NO	NO	No Action: No standard exceeded
OD-SO-A-04	2-Amino-4,6-dinitro	<	100	U	µg/kg	NA	NA	NO	NO	No Action: No standard exceeded
OD-SO-A-04	4-Amino-2,6-dinitro	<	100	U	µg/kg	NA	NA	NO	NO	No Action: No standard exceeded
OD-SO-A-04	HMX	<	200	U	µg/kg	NA	3000000	NO	NO	No Action: No standard exceeded
OD-SO-A-04	m-Nitrotoluene	<	200	U	µg/kg	NA	410000	NO	NO	No Action: No standard exceeded
OD-SO-A-04	Nitrobenzene		53	J	µg/kg	NA	21800	NO	NO	No Action: No standard exceeded
OD-SO-A-04	Nitroglycerine	<	5,900	U	µg/kg	93677.2	347000	NO	NO	No Action: No standard exceeded
OD-SO-A-04	o-Nitrotoluene	<	200	U	µg/kg	NA	410000	NO	NO	No Action: No standard exceeded
OD-SO-A-04	PETN	<	500	U	µg/kg	61300	NA	NO	NO	No Action: No standard exceeded
OD-SO-A-04	p-Nitrotoluene	<	200	U	µg/kg	NA	410000	NO	NO	No Action: No standard exceeded

Exhibit H-1 (Table 6)
Analytical Sample Results

Location	Parameter		Value	Flags	Units	20,000 UTL[1]	NMED SSL[2]	>UTL?	>SSL?	Evaluation
OD-SO-A-04	RDX		2,100		µg/kg	NA	4420	NO	NO	No Action: No standard exceeded
OD-SO-A-04	Tetryl	<	200	U	µg/kg	NA	NA	NO	NO	No Action: No standard exceeded
OD-SO-A-04	TNT	<	100	U	µg/kg	NA	30000	NO	NO	No Action: No standard exceeded
OD-SO-B-01	Antimony	<	1.9	UN	mg/kg	3.5279	31.3	NO	NO	No Action: No standard exceeded
OD-SO-B-01	Arsenic		0.87	B	mg/kg	1.4963	3.9	NO	NO	No Action: No standard exceeded
OD-SO-B-01	Barium		27.2		mg/kg	79.4971	5450	NO	NO	No Action: No standard exceeded
OD-SO-B-01	Beryllium		0.11	B	mg/kg	0.42	156	NO	NO	No Action: No standard exceeded
OD-SO-B-01	Cadmium		0.17	B	mg/kg	0.5417	74.1	NO	NO	No Action: No standard exceeded
OD-SO-B-01	Chromium		2.4		mg/kg	9.5027	234	NO	NO	No Action: No standard exceeded
OD-SO-B-01	Copper		4.3		mg/kg	9.1595	3130	NO	NO	No Action: No standard exceeded
OD-SO-B-01	Lead		5.1		mg/kg	7.6508	400	NO	NO	No Action: No standard exceeded
OD-SO-B-01	Nickel		1.5		mg/kg	6.5898	1560	NO	NO	No Action: No standard exceeded
OD-SO-B-01	Selenium	<	1.9	U	mg/kg	2.2645	391	NO	NO	No Action: No standard exceeded
OD-SO-B-01	Silver	<	0.28	U	mg/kg	0.7328	391	NO	NO	No Action: No standard exceeded
OD-SO-B-01	1,3,5-Trinitrobenze	<	100	U	µg/kg	NA	NA	NO	NO	No Action: No standard exceeded
OD-SO-B-01	1,3-Dinitrobenzene	<	100	U	µg/kg	NA	NA	NO	NO	No Action: No standard exceeded
OD-SO-B-01	2,4-Dinitrotoluene		270		µg/kg	NA	120000	NO	NO	No Action: No standard exceeded
OD-SO-B-01	2,6-Dinitrotoluene	<	100	U	µg/kg	NA	NA	NO	NO	No Action: No standard exceeded
OD-SO-B-01	2-Amino-4,6-dinitro	<	100	U	µg/kg	NA	NA	NO	NO	No Action: No standard exceeded
OD-SO-B-01	4-Amino-2,6-dinitro	<	100	U	µg/kg	NA	NA	NO	NO	No Action: No standard exceeded
OD-SO-B-01	HMX	<	200	U	µg/kg	NA	3000000	NO	NO	No Action: No standard exceeded
OD-SO-B-01	m-Nitrotoluene	<	200	U	µg/kg	NA	410000	NO	NO	No Action: No standard exceeded
OD-SO-B-01	Nitrobenzene	<	100	U	µg/kg	NA	21800	NO	NO	No Action: No standard exceeded
OD-SO-B-01	Nitroglycerine	<	5,500	U	µg/kg	93677.2	347000	NO	NO	No Action: No standard exceeded
OD-SO-B-01	o-Nitrotoluene	<	200	U	µg/kg	NA	410000	NO	NO	No Action: No standard exceeded
OD-SO-B-01	PETN	<	500	U	µg/kg	61300	NA	NO	NO	No Action: No standard exceeded
OD-SO-B-01	p-Nitrotoluene	<	200	U	µg/kg	NA	410000	NO	NO	No Action: No standard exceeded
OD-SO-B-01	RDX		970		µg/kg	NA	4420	NO	NO	No Action: No standard exceeded
OD-SO-B-01	Tetryl	<	200	U	µg/kg	NA	NA	NO	NO	No Action: No standard exceeded
OD-SO-B-01	TNT	<	100	U	µg/kg	NA	30000	NO	NO	No Action: No standard exceeded
OD-SO-B-02	Antimony		0.46	BN	mg/kg	3.5279	31.3	NO	NO	No Action: No standard exceeded
OD-SO-B-02	Arsenic		0.93	B	mg/kg	1.4963	3.9	NO	NO	No Action: No standard exceeded
OD-SO-B-02	Barium		27.7		mg/kg	79.4971	5450	NO	NO	No Action: No standard exceeded
OD-SO-B-02	Beryllium		0.13	B	mg/kg	0.42	156	NO	NO	No Action: No standard exceeded
OD-SO-B-02	Cadmium		0.084	B	mg/kg	0.5417	74.1	NO	NO	No Action: No standard exceeded
OD-SO-B-02	Chromium		2.5		mg/kg	9.5027	234	NO	NO	No Action: No standard exceeded
OD-SO-B-02	Copper		2.5		mg/kg	9.1595	3130	NO	NO	No Action: No standard exceeded
OD-SO-B-02	Lead		0.97	B	mg/kg	7.6508	400	NO	NO	No Action: No standard exceeded
OD-SO-B-02	Nickel		1.5		mg/kg	6.5898	1560	NO	NO	No Action: No standard exceeded
OD-SO-B-02	Selenium	<	2.2	U	mg/kg	2.2645	391	NO	NO	No Action: No standard exceeded
OD-SO-B-02	Silver	<	0.32	U	mg/kg	0.7328	391	NO	NO	No Action: No standard exceeded
OD-SO-B-02	1,3,5-Trinitrobenze	<	100	U	µg/kg	NA	NA	NO	NO	No Action: No standard exceeded
OD-SO-B-02	1,3-Dinitrobenzene	<	100	U	µg/kg	NA	NA	NO	NO	No Action: No standard exceeded

Exhibit H-1 (Table 6)
Analytical Sample Results

Location	Parameter		Value	Flags	Units	20,000 UTL[1]	NMED SSL[2]	>UTL?	>SSL?	Evaluation
OD-SO-B-02	2,4-Dinitrotoluene	<	100	U	µg/kg	NA	120000	NO	NO	No Action: No standard exceeded
OD-SO-B-02	2,6-Dinitrotoluene	<	100	U	µg/kg	NA	NA	NO	NO	No Action: No standard exceeded
OD-SO-B-02	2-Amino-4,6-dinitro	<	100	U	µg/kg	NA	NA	NO	NO	No Action: No standard exceeded
OD-SO-B-02	4-Amino-2,6-dinitro	<	100	U	µg/kg	NA	NA	NO	NO	No Action: No standard exceeded
OD-SO-B-02	HMX	<	200	U	µg/kg	NA	3000000	NO	NO	No Action: No standard exceeded
OD-SO-B-02	m-Nitrotoluene	<	200	U	µg/kg	NA	410000	NO	NO	No Action: No standard exceeded
OD-SO-B-02	Nitrobenzene	<	100	U	µg/kg	NA	21800	NO	NO	No Action: No standard exceeded
OD-SO-B-02	Nitroglycerine	<	5,800	U	µg/kg	93677.2	347000	NO	NO	No Action: No standard exceeded
OD-SO-B-02	o-Nitrotoluene	<	200	U	µg/kg	NA	410000	NO	NO	No Action: No standard exceeded
OD-SO-B-02	PETN	<	500	U	µg/kg	61300	NA	NO	NO	No Action: No standard exceeded
OD-SO-B-02	p-Nitrotoluene	<	200	U	µg/kg	NA	410000	NO	NO	No Action: No standard exceeded
OD-SO-B-02	RDX	<	200	U	µg/kg	NA	4420	NO	NO	No Action: No standard exceeded
OD-SO-B-02	Tetryl	<	200	U	µg/kg	NA	NA	NO	NO	No Action: No standard exceeded
OD-SO-B-02	TNT	<	100	U	µg/kg	NA	30000	NO	NO	No Action: No standard exceeded
OD-SO-B-03	Antimony		0.49	BN	mg/kg	3.5279	31.3	NO	NO	No Action: No standard exceeded
OD-SO-B-03	Arsenic		0.81	B	mg/kg	1.4963	3.9	NO	NO	No Action: No standard exceeded
OD-SO-B-03	Barium		29.2		mg/kg	79.4971	5450	NO	NO	No Action: No standard exceeded
OD-SO-B-03	Beryllium		0.11	B	mg/kg	0.42	156	NO	NO	No Action: No standard exceeded
OD-SO-B-03	Cadmium		0.14	B	mg/kg	0.5417	74.1	NO	NO	No Action: No standard exceeded
OD-SO-B-03	Chromium		3.1		mg/kg	9.5027	234	NO	NO	No Action: No standard exceeded
OD-SO-B-03	Copper		3.8		mg/kg	9.1595	3130	NO	NO	No Action: No standard exceeded
OD-SO-B-03	Lead		3.3		mg/kg	7.6508	400	NO	NO	No Action: No standard exceeded
OD-SO-B-03	Nickel		1.6		mg/kg	6.5898	1560	NO	NO	No Action: No standard exceeded
OD-SO-B-03	Selenium	<	2	U	mg/kg	2.2645	391	NO	NO	No Action: No standard exceeded
OD-SO-B-03	Silver	<	0.3	U	mg/kg	0.7328	391	NO	NO	No Action: No standard exceeded
OD-SO-B-03	1,3,5-Trinitrobenze	<	100	U	µg/kg	NA	NA	NO	NO	No Action: No standard exceeded
OD-SO-B-03	1,3-Dinitrobenzene	<	100	U	µg/kg	NA	NA	NO	NO	No Action: No standard exceeded
OD-SO-B-03	2,4-Dinitrotoluene	<	100	U	µg/kg	NA	120000	NO	NO	No Action: No standard exceeded
OD-SO-B-03	2,6-Dinitrotoluene	<	100	U	µg/kg	NA	NA	NO	NO	No Action: No standard exceeded
OD-SO-B-03	2-Amino-4,6-dinitro	<	100	U	µg/kg	NA	NA	NO	NO	No Action: No standard exceeded
OD-SO-B-03	4-Amino-2,6-dinitro	<	100	U	µg/kg	NA	NA	NO	NO	No Action: No standard exceeded
OD-SO-B-03	HMX	<	200	U	µg/kg	NA	3000000	NO	NO	No Action: No standard exceeded
OD-SO-B-03	m-Nitrotoluene	<	200	U	µg/kg	NA	410000	NO	NO	No Action: No standard exceeded
OD-SO-B-03	Nitrobenzene	<	100	U	µg/kg	NA	21800	NO	NO	No Action: No standard exceeded
OD-SO-B-03	Nitroglycerine	<	5,600	U	µg/kg	93677.2	347000	NO	NO	No Action: No standard exceeded
OD-SO-B-03	o-Nitrotoluene	<	200	U	µg/kg	NA	410000	NO	NO	No Action: No standard exceeded
OD-SO-B-03	PETN	<	500	U	µg/kg	61300	NA	NO	NO	No Action: No standard exceeded
OD-SO-B-03	p-Nitrotoluene	<	200	U	µg/kg	NA	410000	NO	NO	No Action: No standard exceeded
OD-SO-B-03	RDX		1,300		µg/kg	NA	4420	NO	NO	No Action: No standard exceeded
OD-SO-B-03	Tetryl	<	200	U	µg/kg	NA	NA	NO	NO	No Action: No standard exceeded
OD-SO-B-03	TNT	<	100	U	µg/kg	NA	30000	NO	NO	No Action: No standard exceeded
OD-SO-B-03A	Antimony	<	1.9	UN	mg/kg	3.5279	31.3	NO	NO	No Action: No standard exceeded
OD-SO-B-03A	Arsenic		0.87	B	mg/kg	1.4963	3.9	NO	NO	No Action: No standard exceeded

Exhibit H-1 (Table 6)
Analytical Sample Results

Location	Parameter		Value	Flags	Units	20,000 UTL[1]	NMED SSL[2]	>UTL?	>SSL?	Evaluation
OD-SO-B-03A	Barium		31.4		mg/kg	79.4971	5450	NO	NO	No Action: No standard exceeded
OD-SO-B-03A	Beryllium		0.13	B	mg/kg	0.42	156	NO	NO	No Action: No standard exceeded
OD-SO-B-03A	Cadmium		0.26	B	mg/kg	0.5417	74.1	NO	NO	No Action: No standard exceeded
OD-SO-B-03A	Chromium		3.8		mg/kg	9.5027	234	NO	NO	No Action: No standard exceeded
OD-SO-B-03A	Copper		6.1		mg/kg	9.1595	3130	NO	NO	No Action: No standard exceeded
OD-SO-B-03A	Lead		3.8		mg/kg	7.6508	400	NO	NO	No Action: No standard exceeded
OD-SO-B-03A	Nickel		2.5		mg/kg	6.5898	1560	NO	NO	No Action: No standard exceeded
OD-SO-B-03A	Selenium	<	1.9	U	mg/kg	2.2645	391	NO	NO	No Action: No standard exceeded
OD-SO-B-03A	Silver	<	0.29	U	mg/kg	0.7328	391	NO	NO	No Action: No standard exceeded
OD-SO-B-03A	1,3,5-Trinitrobenze	<	100	U	µg/kg	NA	NA	NO	NO	No Action: No standard exceeded
OD-SO-B-03A	1,3-Dinitrobenzene	<	100	U	µg/kg	NA	NA	NO	NO	No Action: No standard exceeded
OD-SO-B-03A	2,4-Dinitrotoluene	<	100	U	µg/kg	NA	120000	NO	NO	No Action: No standard exceeded
OD-SO-B-03A	2,6-Dinitrotoluene	<	100	U	µg/kg	NA	NA	NO	NO	No Action: No standard exceeded
OD-SO-B-03A	2-Amino-4,6-dinitro	<	100	U	µg/kg	NA	NA	NO	NO	No Action: No standard exceeded
OD-SO-B-03A	4-Amino-2,6-dinitro	<	100	U	µg/kg	NA	NA	NO	NO	No Action: No standard exceeded
OD-SO-B-03A	HMX		78	J	µg/kg	NA	3000000	NO	NO	No Action: No standard exceeded
OD-SO-B-03A	m-Nitrotoluene	<	200	U	µg/kg	NA	410000	NO	NO	No Action: No standard exceeded
OD-SO-B-03A	Nitrobenzene		49	J	µg/kg	NA	21800	NO	NO	No Action: No standard exceeded
OD-SO-B-03A	Nitroglycerine	<	5,800	U	µg/kg	93677.2	347000	NO	NO	No Action: No standard exceeded
OD-SO-B-03A	o-Nitrotoluene	<	200	U	µg/kg	NA	410000	NO	NO	No Action: No standard exceeded
OD-SO-B-03A	PETN	<	500	U	µg/kg	61300	NA	NO	NO	No Action: No standard exceeded
OD-SO-B-03A	p-Nitrotoluene	<	200	U	µg/kg	NA	410000	NO	NO	No Action: No standard exceeded
OD-SO-B-03A	RDX		2,900		µg/kg	NA	4420	NO	NO	No Action: No standard exceeded
OD-SO-B-03A	Tetryl	<	200	U	µg/kg	NA	NA	NO	NO	No Action: No standard exceeded
OD-SO-B-03A	TNT		290		µg/kg	NA	30000	NO	NO	No Action: No standard exceeded
OD-SO-B-04	Antimony		0.43	BN	mg/kg	3.5279	31.3	NO	NO	No Action: No standard exceeded
OD-SO-B-04	Arsenic		1	B	mg/kg	1.4963	3.9	NO	NO	No Action: No standard exceeded
OD-SO-B-04	Barium		28.7		mg/kg	79.4971	5450	NO	NO	No Action: No standard exceeded
OD-SO-B-04	Beryllium		0.1	B	mg/kg	0.42	156	NO	NO	No Action: No standard exceeded
OD-SO-B-04	Cadmium		0.086	B	mg/kg	0.5417	74.1	NO	NO	No Action: No standard exceeded
OD-SO-B-04	Chromium		2.5		mg/kg	9.5027	234	NO	NO	No Action: No standard exceeded
OD-SO-B-04	Copper		1.8		mg/kg	9.1595	3130	NO	NO	No Action: No standard exceeded
OD-SO-B-04	Lead		2		mg/kg	7.6508	400	NO	NO	No Action: No standard exceeded
OD-SO-B-04	Nickel		1.3		mg/kg	6.5898	1560	NO	NO	No Action: No standard exceeded
OD-SO-B-04	Selenium	<	1.9	U	mg/kg	2.2645	391	NO	NO	No Action: No standard exceeded
OD-SO-B-04	Silver	<	0.29	U	mg/kg	0.7328	391	NO	NO	No Action: No standard exceeded
OD-SO-B-04	1,3,5-Trinitrobenze	<	100	U	µg/kg	NA	NA	NO	NO	No Action: No standard exceeded
OD-SO-B-04	1,3-Dinitrobenzene	<	100	U	µg/kg	NA	NA	NO	NO	No Action: No standard exceeded
OD-SO-B-04	2,4-Dinitrotoluene	<	100	U	µg/kg	NA	120000	NO	NO	No Action: No standard exceeded
OD-SO-B-04	2,6-Dinitrotoluene	<	100	U	µg/kg	NA	NA	NO	NO	No Action: No standard exceeded
OD-SO-B-04	2-Amino-4,6-dinitro	<	100	U	µg/kg	NA	NA	NO	NO	No Action: No standard exceeded
OD-SO-B-04	4-Amino-2,6-dinitro	<	100	U	µg/kg	NA	NA	NO	NO	No Action: No standard exceeded
OD-SO-B-04	HMX	<	200	U	µg/kg	NA	3000000	NO	NO	No Action: No standard exceeded

Exhibit H-1 (Table 6)
Analytical Sample Results

Location	Parameter		Value	Flags	Units	20,000 UTL[1]	NMED SSL[2]	>UTL?	>SSL?	Evaluation
OD-SO-B-04	m-Nitrotoluene	<	200	U	µg/kg	NA	410000	NO	NO	No Action: No standard exceeded
OD-SO-B-04	Nitrobenzene	<	100	U	µg/kg	NA	21800	NO	NO	No Action: No standard exceeded
OD-SO-B-04	Nitroglycerine	<	5,900	U	µg/kg	93677.2	347000	NO	NO	No Action: No standard exceeded
OD-SO-B-04	o-Nitrotoluene	<	200	U	µg/kg	NA	410000	NO	NO	No Action: No standard exceeded
OD-SO-B-04	PETN	<	500	U	µg/kg	61300	NA	NO	NO	No Action: No standard exceeded
OD-SO-B-04	p-Nitrotoluene	<	200	U	µg/kg	NA	410000	NO	NO	No Action: No standard exceeded
OD-SO-B-04	RDX	<	200	U	µg/kg	NA	4420	NO	NO	No Action: No standard exceeded
OD-SO-B-04	Tetryl	<	200	U	µg/kg	NA	NA	NO	NO	No Action: No standard exceeded
OD-SO-B-04	TNT	<	100	U	µg/kg	NA	30000	NO	NO	No Action: No standard exceeded
OD-SO-C-01	Antimony		0.52	BN	mg/kg	3.5279	31.3	NO	NO	No Action: No standard exceeded
OD-SO-C-01	Barium		46.6		mg/kg	79.4971	5450	NO	NO	No Action: No standard exceeded
OD-SO-C-01	Beryllium		0.25		mg/kg	0.42	156	NO	NO	No Action: No standard exceeded
OD-SO-C-01	Chromium		5.8		mg/kg	9.5027	234	NO	NO	No Action: No standard exceeded
OD-SO-C-01	Nickel		4		mg/kg	6.5898	1560	NO	NO	No Action: No standard exceeded
OD-SO-C-01	Selenium	<	2.1	U	mg/kg	2.2645	391	NO	NO	No Action: No standard exceeded
OD-SO-C-01	Silver	<	0.31	U	mg/kg	0.7328	391	NO	NO	No Action: No standard exceeded
OD-SO-C-01	1,3,5-Trinitrobenze	<	100	U	µg/kg	NA	NA	NO	NO	No Action: No standard exceeded
OD-SO-C-01	1,3-Dinitrobenzene	<	100	U	µg/kg	NA	NA	NO	NO	No Action: No standard exceeded
OD-SO-C-01	2,4-Dinitrotoluene	<	100	U	µg/kg	NA	120000	NO	NO	No Action: No standard exceeded
OD-SO-C-01	2,6-Dinitrotoluene	<	100	U	µg/kg	NA	NA	NO	NO	No Action: No standard exceeded
OD-SO-C-01	2-Amino-4,6-dinitro	<	100	U	µg/kg	NA	NA	NO	NO	No Action: No standard exceeded
OD-SO-C-01	4-Amino-2,6-dinitro	<	100	U	µg/kg	NA	NA	NO	NO	No Action: No standard exceeded
OD-SO-C-01	HMX	<	200	U	µg/kg	NA	3000000	NO	NO	No Action: No standard exceeded
OD-SO-C-01	m-Nitrotoluene	<	200	U	µg/kg	NA	410000	NO	NO	No Action: No standard exceeded
OD-SO-C-01	Nitrobenzene		38	J	µg/kg	NA	21800	NO	NO	No Action: No standard exceeded
OD-SO-C-01	Nitroglycerine	<	5,900	U	µg/kg	93677.2	347000	NO	NO	No Action: No standard exceeded
OD-SO-C-01	o-Nitrotoluene	<	200	U	µg/kg	NA	410000	NO	NO	No Action: No standard exceeded
OD-SO-C-01	PETN	<	500	U	µg/kg	61300	NA	NO	NO	No Action: No standard exceeded
OD-SO-C-01	p-Nitrotoluene	<	200	U	µg/kg	NA	410000	NO	NO	No Action: No standard exceeded
OD-SO-C-01	RDX	<	200	U	µg/kg	NA	4420	NO	NO	No Action: No standard exceeded
OD-SO-C-01	Tetryl	<	200	U	µg/kg	NA	NA	NO	NO	No Action: No standard exceeded
OD-SO-C-01	TNT	<	100	U	µg/kg	NA	30000	NO	NO	No Action: No standard exceeded
OD-SO-C-02	Antimony		0.46	BN	mg/kg	3.5279	31.3	NO	NO	No Action: No standard exceeded
OD-SO-C-02	Arsenic		0.9	B	mg/kg	1.4963	3.9	NO	NO	No Action: No standard exceeded
OD-SO-C-02	Barium		35.3		mg/kg	79.4971	5450	NO	NO	No Action: No standard exceeded
OD-SO-C-02	Beryllium		0.14	B	mg/kg	0.42	156	NO	NO	No Action: No standard exceeded
OD-SO-C-02	Chromium		5		mg/kg	9.5027	234	NO	NO	No Action: No standard exceeded
OD-SO-C-02	Copper		7.5		mg/kg	9.1595	3130	NO	NO	No Action: No standard exceeded
OD-SO-C-02	Nickel		2.4		mg/kg	6.5898	1560	NO	NO	No Action: No standard exceeded
OD-SO-C-02	Selenium	<	2.1	U	mg/kg	2.2645	391	NO	NO	No Action: No standard exceeded
OD-SO-C-02	Silver	<	0.31	U	mg/kg	0.7328	391	NO	NO	No Action: No standard exceeded
OD-SO-C-02	1,3,5-Trinitrobenze	<	100	U	µg/kg	NA	NA	NO	NO	No Action: No standard exceeded
OD-SO-C-02	1,3-Dinitrobenzene	<	100	U	µg/kg	NA	NA	NO	NO	No Action: No standard exceeded

Exhibit H-1 (Table 6)
Analytical Sample Results

Location	Parameter		Value	Flags	Units	20,000 UTL[1]	NMED SSL[2]	>UTL?	>SSL?	Evaluation
OD-SO-C-02	2,4-Dinitrotoluene	<	100	U	µg/kg	NA	120000	NO	NO	No Action: No standard exceeded
OD-SO-C-02	2,6-Dinitrotoluene	<	100	U	µg/kg	NA	NA	NO	NO	No Action: No standard exceeded
OD-SO-C-02	2-Amino-4,6-dinitro	<	100	U	µg/kg	NA	NA	NO	NO	No Action: No standard exceeded
OD-SO-C-02	4-Amino-2,6-dinitro	<	100	U	µg/kg	NA	NA	NO	NO	No Action: No standard exceeded
OD-SO-C-02	HMX	<	200	U	µg/kg	NA	3000000	NO	NO	No Action: No standard exceeded
OD-SO-C-02	m-Nitrotoluene	<	200	U	µg/kg	NA	410000	NO	NO	No Action: No standard exceeded
OD-SO-C-02	Nitrobenzene		35	J	µg/kg	NA	21800	NO	NO	No Action: No standard exceeded
OD-SO-C-02	Nitroglycerine	<	6,000	U	µg/kg	93677.2	347000	NO	NO	No Action: No standard exceeded
OD-SO-C-02	o-Nitrotoluene	<	200	U	µg/kg	NA	410000	NO	NO	No Action: No standard exceeded
OD-SO-C-02	PETN	<	500	U	µg/kg	61300	NA	NO	NO	No Action: No standard exceeded
OD-SO-C-02	p-Nitrotoluene	<	200	U	µg/kg	NA	410000	NO	NO	No Action: No standard exceeded
OD-SO-C-02	RDX	<	200	U	µg/kg	NA	4420	NO	NO	No Action: No standard exceeded
OD-SO-C-02	Tetryl	<	200	U	µg/kg	NA	NA	NO	NO	No Action: No standard exceeded
OD-SO-C-02	TNT	<	100	U	µg/kg	NA	30000	NO	NO	No Action: No standard exceeded
OD-SO-C-03	Antimony	<	2.2	UN	mg/kg	3.5279	31.3	NO	NO	No Action: No standard exceeded
OD-SO-C-03	Arsenic		1.2	B	mg/kg	1.4963	3.9	NO	NO	No Action: No standard exceeded
OD-SO-C-03	Barium		60		mg/kg	79.4971	5450	NO	NO	No Action: No standard exceeded
OD-SO-C-03	Beryllium		0.29		mg/kg	0.42	156	NO	NO	No Action: No standard exceeded
OD-SO-C-03	Cadmium		0.29	B	mg/kg	0.5417	74.1	NO	NO	No Action: No standard exceeded
OD-SO-C-03	Chromium		6.7		mg/kg	9.5027	234	NO	NO	No Action: No standard exceeded
OD-SO-C-03	Lead		7.2		mg/kg	7.6508	400	NO	NO	No Action: No standard exceeded
OD-SO-C-03	Nickel		4		mg/kg	6.5898	1560	NO	NO	No Action: No standard exceeded
OD-SO-C-03	Selenium	<	2.2	U	mg/kg	2.2645	391	NO	NO	No Action: No standard exceeded
OD-SO-C-03	Silver	<	0.33	U	mg/kg	0.7328	391	NO	NO	No Action: No standard exceeded
OD-SO-C-03	1,3,5-Trinitrobenze	<	100	U	µg/kg	NA	NA	NO	NO	No Action: No standard exceeded
OD-SO-C-03	1,3-Dinitrobenzene	<	100	U	µg/kg	NA	NA	NO	NO	No Action: No standard exceeded
OD-SO-C-03	2,4-Dinitrotoluene	<	100	U	µg/kg	NA	120000	NO	NO	No Action: No standard exceeded
OD-SO-C-03	2,6-Dinitrotoluene	<	100	U	µg/kg	NA	NA	NO	NO	No Action: No standard exceeded
OD-SO-C-03	2-Amino-4,6-dinitro	<	100	U	µg/kg	NA	NA	NO	NO	No Action: No standard exceeded
OD-SO-C-03	4-Amino-2,6-dinitro	<	100	U	µg/kg	NA	NA	NO	NO	No Action: No standard exceeded
OD-SO-C-03	HMX	<	200	U	µg/kg	NA	3000000	NO	NO	No Action: No standard exceeded
OD-SO-C-03	m-Nitrotoluene	<	200	U	µg/kg	NA	410000	NO	NO	No Action: No standard exceeded
OD-SO-C-03	Nitrobenzene		63	J	µg/kg	NA	21800	NO	NO	No Action: No standard exceeded
OD-SO-C-03	Nitroglycerine	<	6,700	U	µg/kg	93677.2	347000	NO	NO	No Action: No standard exceeded
OD-SO-C-03	o-Nitrotoluene	<	200	U	µg/kg	NA	410000	NO	NO	No Action: No standard exceeded
OD-SO-C-03	PETN	<	500	U	µg/kg	61300	NA	NO	NO	No Action: No standard exceeded
OD-SO-C-03	p-Nitrotoluene	<	200	U	µg/kg	NA	410000	NO	NO	No Action: No standard exceeded
OD-SO-C-03	RDX	<	200	U	µg/kg	NA	4420	NO	NO	No Action: No standard exceeded
OD-SO-C-03	Tetryl	<	200	U	µg/kg	NA	NA	NO	NO	No Action: No standard exceeded
OD-SO-C-03	TNT	<	100	U	µg/kg	NA	30000	NO	NO	No Action: No standard exceeded
OD-SO-C-04	Antimony		0.72	BN	mg/kg	3.5279	31.3	NO	NO	No Action: No standard exceeded
OD-SO-C-04	Barium		76.4		mg/kg	79.4971	5450	NO	NO	No Action: No standard exceeded
OD-SO-C-04	Chromium		9.5		mg/kg	9.5027	234	NO	NO	No Action: No standard exceeded

Exhibit H-1 (Table 6)
Analytical Sample Results

Location	Parameter		Value	Flags	Units	20,000 UTL[1]	NMED SSL[2]	>UTL?	>SSL?	Evaluation
OD-SO-C-04	Mercury		0.019	B	mg/kg	0.0269	6.11	NO	NO	No Action: No standard exceeded
OD-SO-C-04	Nickel		6.4		mg/kg	6.5898	1560	NO	NO	No Action: No standard exceeded
OD-SO-C-04	Selenium	<	1.9	U	mg/kg	2.2645	391	NO	NO	No Action: No standard exceeded
OD-SO-C-04	Silver	<	0.29	U	mg/kg	0.7328	391	NO	NO	No Action: No standard exceeded
OD-SO-C-04	1,3,5-Trinitrobenze	<	100	U	µg/kg	NA	NA	NO	NO	No Action: No standard exceeded
OD-SO-C-04	1,3-Dinitrobenzene	<	100	U	µg/kg	NA	NA	NO	NO	No Action: No standard exceeded
OD-SO-C-04	2,4-Dinitrotoluene	<	100	U	µg/kg	NA	120000	NO	NO	No Action: No standard exceeded
OD-SO-C-04	2,6-Dinitrotoluene	<	100	U	µg/kg	NA	NA	NO	NO	No Action: No standard exceeded
OD-SO-C-04	2-Amino-4,6-dinitro	<	100	U	µg/kg	NA	NA	NO	NO	No Action: No standard exceeded
OD-SO-C-04	4-Amino-2,6-dinitro	<	100	U	µg/kg	NA	NA	NO	NO	No Action: No standard exceeded
OD-SO-C-04	HMX	<	200	U	µg/kg	NA	3000000	NO	NO	No Action: No standard exceeded
OD-SO-C-04	m-Nitrotoluene	<	200	U	µg/kg	NA	410000	NO	NO	No Action: No standard exceeded
OD-SO-C-04	Nitrobenzene		68	J	µg/kg	NA	21800	NO	NO	No Action: No standard exceeded
OD-SO-C-04	Nitroglycerine	<	6,000	U	µg/kg	93677.2	347000	NO	NO	No Action: No standard exceeded
OD-SO-C-04	o-Nitrotoluene	<	200	U	µg/kg	NA	410000	NO	NO	No Action: No standard exceeded
OD-SO-C-04	PETN	<	500	U	µg/kg	61300	NA	NO	NO	No Action: No standard exceeded
OD-SO-C-04	p-Nitrotoluene	<	200	U	µg/kg	NA	410000	NO	NO	No Action: No standard exceeded
OD-SO-C-04	RDX	<	200	U	µg/kg	NA	4420	NO	NO	No Action: No standard exceeded
OD-SO-C-04	Tetryl	<	200	U	µg/kg	NA	NA	NO	NO	No Action: No standard exceeded
OD-SO-C-04	TNT	<	100	U	µg/kg	NA	30000	NO	NO	No Action: No standard exceeded
[1] 20,000 UTL:	Final Background Study, 20000-Pound Open Detonation Unit, December 1997									
[2] NMED SSL:	New Mexico Environment Department Soil Screening Levels, February 2004, Revision 2									

DRAFT

ATTACHMENT I
ENVIRONMENTAL PROTECTION

HOLLOMAN AIR FORCE BASE
20,000-POUND OPEN DETONATION TREATMENT UNIT

Permit No. NM6572124422

ATTACHMENT I
ENVIRONMENTAL PROTECTION

INTRODUCTION

The environmental performance standards in New Mexico Administrative Code, Title 20, Chapter 4, Part 1, Subpart V (20.4.1.500 NMAC), incorporating Title 40 Code of Federal Regulations (CFR) Part 264, require Miscellaneous Units to be located, designed, constructed, operated, maintained, and closed in a manner that will ensure protection of human health and the environment. The Holloman Air Force Base (HAFB) 20,000-Pound Open Detonation (OD) Unit is located in an isolated area in the EOD Range with no developments or habitation within an approximately 5-mile radius from the unit. The OD Unit is designed and operated to prevent adverse human health and environmental impacts. Waste management practices are detailed in Attachment F of this Part B permit renewal application. The OD Unit will be operated, maintained, and closed in a manner that will continue to ensure protection of human health and the environment. The Waste Analysis Plan included in Attachment B of this renewal application includes information on the volume and physical and chemical characteristics of wastes treated at the OD Unit. A Contingency Plan describing emergency response actions that will be implemented to minimize adverse impacts of unexpected spills or releases is included in Attachment E.

I.1 SITE CHARACTERISTICS

The geologic, hydrologic, and metorological characteristics for the HAFB region are described in the following sections as required by 20.4.1.500 NMAC §264.601. Information on land use within HAFB and surrounding areas is presented in Attachment A, General Facility Description.

I.1.1 GEOLOGY

HAFB is located within the northern Chihuahuan Desert, in the region known as the Tularosa Basin. The basin is approximately 120 miles long and 28 miles wide. It is bounded on the east by the Sacramento Mountains and on the west by the San Andres Mountains. The basin was formed when the surrounding mountains were uplifted, creating an elongated, faulted valley known as a graben. Elevations within the Tularosa Basin range from 4400 feet above mean sea level (MSL) at the northeast corner to 4000 feet MSL in the southwest corner. The OD Unit is located down slope of the Sacramento Mountains at an approximate elevation of 4100 feet MSL.

The surrounding Sacramento and San Andres Mountains are composed of Precambrian to Permian granite, limestone, dolomite, and gypsum with interbedded clays, sands, and gravels. Eroded sediments from these mountains were deposited by streams, filling the Tularosa Basin. Since these sediments were carried by water into a closed basin, they are called bolson deposits. These bolson deposits are approximately 4,000 feet thick in the vicinity of HAFB. Only the uppermost bolson deposits are of significance to this permit text. A generalized geologic cross-section of the present-day Tularosa Basin is presented in Figure I-1.

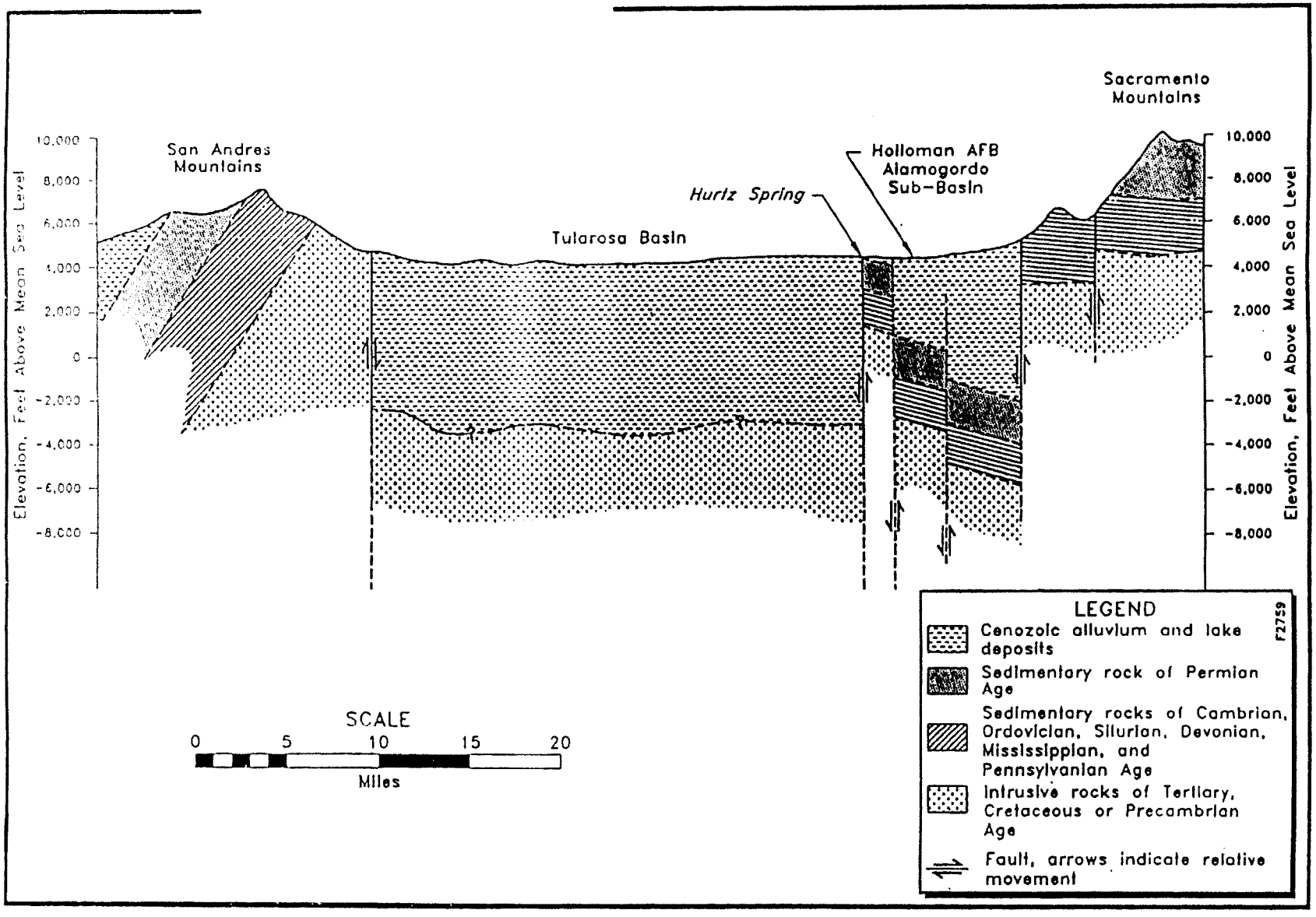

Figure I-1 Generalized Geologic Cross Section of the Tularosa Basin

I.1.1.1 Soils

Two soil types were identified on the installation. The main soil type is the Holloman-Gypsum Land-Yesum complex, 0 to 5 percent slopes. The other soil type is Mead silty clay loam, 0 to 1 percent slopes. This soil type is located only across the main drainage area for the installation.

The Holloman-Gypsum Land-Yesum complex, 0 to 5 percent slopes soil consists of large areas of shallow and deep, well drained soils and areas of exposed gypsum. The Holloman soil makes up about 35 percent of the complex. Typically, the surface layer is light brown very fine sandy loam about 3 inches thick. The upper 13 inches of the substratum is pink very fine sandy loam that is very high in gypsum. Below that, the substratum is white gypsum to a depth of more than 60 inches. This soil is calcareous and mildly alkaline to moderately alkaline throughout. Permeability is moderate, and available water capacity is very low.

Gypsum land makes up about 30 percent of the Holloman-Gypsum land-Yesum complex, 0 to 5 percent slopes. Typically, less than 1 inch of very fine sandy loam overlies soft to hard, white gypsum. The deep Yesum very fine sandy loam makes up about 20 percent of the complex. Typically, the surface layer is light brown very fine sandy loam about 3 inches thick. The upper 9 inches of the substratum is light brown fine sandy loam that is very high in gypsum. Below that, the substratum is pink very fine sandy loam to a depth of more than 60 inches. The soil is calcareous throughout and is mildly alkaline. Permeability is moderate, and available water capacity is moderate. Many fine gypsum crystals are found throughout the profile.

The remaining soil type on the installation is Mead silty clay loam, 0 to 1 percent slopes. This deep, poorly drained, nearly level soil is on outer fringes of alluvial fans. This soil formed in fine textured alluvium over lacustrine lake sediment. It is very high in salt content because of periodic flooding and poor drainage. Slopes are smooth and concave. Typically, the surface layer is reddish brown silty clay loam and clay loam about 5 inches thick. The substratum, to a depth of 48 inches, is light reddish brown clay that has a high content of salts. Below that, the substratum is lacustrine material of variable texture and color to a depth of more than 60 inches. Included with this soil are areas of Holloman soils and Gypsum land along the margins of the unit of steep, short gully sides and knolls. These inclusions make up about 15 percent of the map unit for this soil type. Individual areas are generally smaller than 10 acres. This soil is moderately calcareous throughout and is moderately to strongly alkaline. It has a layer of salt that is more soluble than gypsum. Permeability is very slow, and available water capacity is low.

Subsurface soils were investigated in 1993 during installation of four monitoring wells (HAFB/EODMW-01, -02, -03, and -04) near the OD Unit. Lithologies encountered during the investigation are presented in a generalized geologic log (Table I-1) and illustrated in a geologic cross-section of the OD Unit (Figure I-2). An analysis of the geologic cross-section presented in Figure I-2 shows a slight change in depositional environments across the OD Unit. The thickest sequence of silty clay (playa-lacustrine deposits) is shown in HAFB/EOD-MW-01, while HAFB/EOD-MW-02 shows the thickest sequence of sand and silty sand mixtures (eolian deposits). The eolian deposits are predominantly interdune deposits consisting of fine sand and silt. Below 30 feet the geologic interpretation becomes more complex. The geologic logs show lithologic changes across the site between silty clay, silty sand, and sand at the downgradient wells (HAFB/EOD-MW-02, -03, and -04). Meanwhile, the upgradient well (HAFB/EOD-MW-

01) shows massive silty clay with stringers or lenses of sand. It is highly probable that these sand zones are interconnected.

Table I-1 Generalized Geologic (Soil Boring) Log[1]

DEPTH	GENERALIZED DESCRIPTION
0 and 10 feet	**SAND** – Light tan, yellowish tan and light brown fine- grained well sorted sand with layers of silt-sand, porous, loose to slightly firm and dry to trace moisture present. This upper zone represents eolian-type deposits. The sands are most likely dunes, and the silt-sand represents an interdune sequence.
10 to 12 feet (Extends to 16 feet at HAFB/EOD-MW-02)	**SILT to SILTY CLAY** – Reddish brown (HAFB/EOD-MW-02 also has alternating layers of gray green and light gray to white), slightly firm, low to moderately plastic and dry to trace moisture. Most likely represents a small playa at the site.[2,3]
12 to 30 feet (Extends to 40 feet at HAFB/EOD-MW-02)	**SAND** – Light tan, yellowish tan and light brown with reddish brown and brown layers, predominantly a fine-grained, well-sorted sand and with occasional layers of medium-to-coarse grained sands slightly firm to firm and trace moisture present.
30 to 50 (HAFB/EOD-MW-02 starts at 40 feet)	**SILTY CLAY with interbedded SAND** – A gradational change of depositional environments can be observed in the logs. Reddish brown silty clay representing playa/lacustrine deposits[2] with dune and interdunal deposits merge in and out of the clay, or back and forth across the playa. The occasional thin layers of sand in the larger clay units may represent wind-blown particulate across the playa or an occasional sheet flood that are common in this type of environment. The clay deposits are thickest at HAFB/EOD-MW-01. These deposits are reddish brown silty clay with light gray or green gray mottling[4] in the upper 2 feet, moderate to high plasticity, slightly firm to firm, ranting in moisture from trace to wet. At 50 feet, 1 to 2 mm gypsum crystals were found. Sands found below 30 feet are fine to medium grained, medium grain predominant. At HAFB/EOD-MW-02 flowing sands were encountered at 42 feet.

[1] Modified from ICF Kaiser and Labat-Anderson, 1993.

[2] The reddish brown color associated with the playas is common and suggest an oxidizing environment of the iron present in the sediments. The coloration may also imply well-drained soils.

[3] Poorly drained soils which are saturated most of the time are generally gray in color because the iron has been reduced or removed. This is true for humid climates; however, not always true in arid environments.

[4] A mottled gray and reddish brown color suggests the subsoils are subjected to alternating or seasonable periods of saturation.

I.1.2 HYDROLOGY

I.1.2.1 Surface Water

OD Unit Area Surface Drainage

Surface drainages near the OD Unit include the Allen Draw, the Reagan Draw, and the Guilez Draw (Figure A-6). In the vicinity of the OD Unit, surface water flow is associated only with infrequent heavy rainfall or snow melt events. The OD Unit is located on relatively flat terrain far above the 100-year floodplain boundaries.

Holloman Air Force Base
Open Detonation Treatment Unit
NMED Control Copy

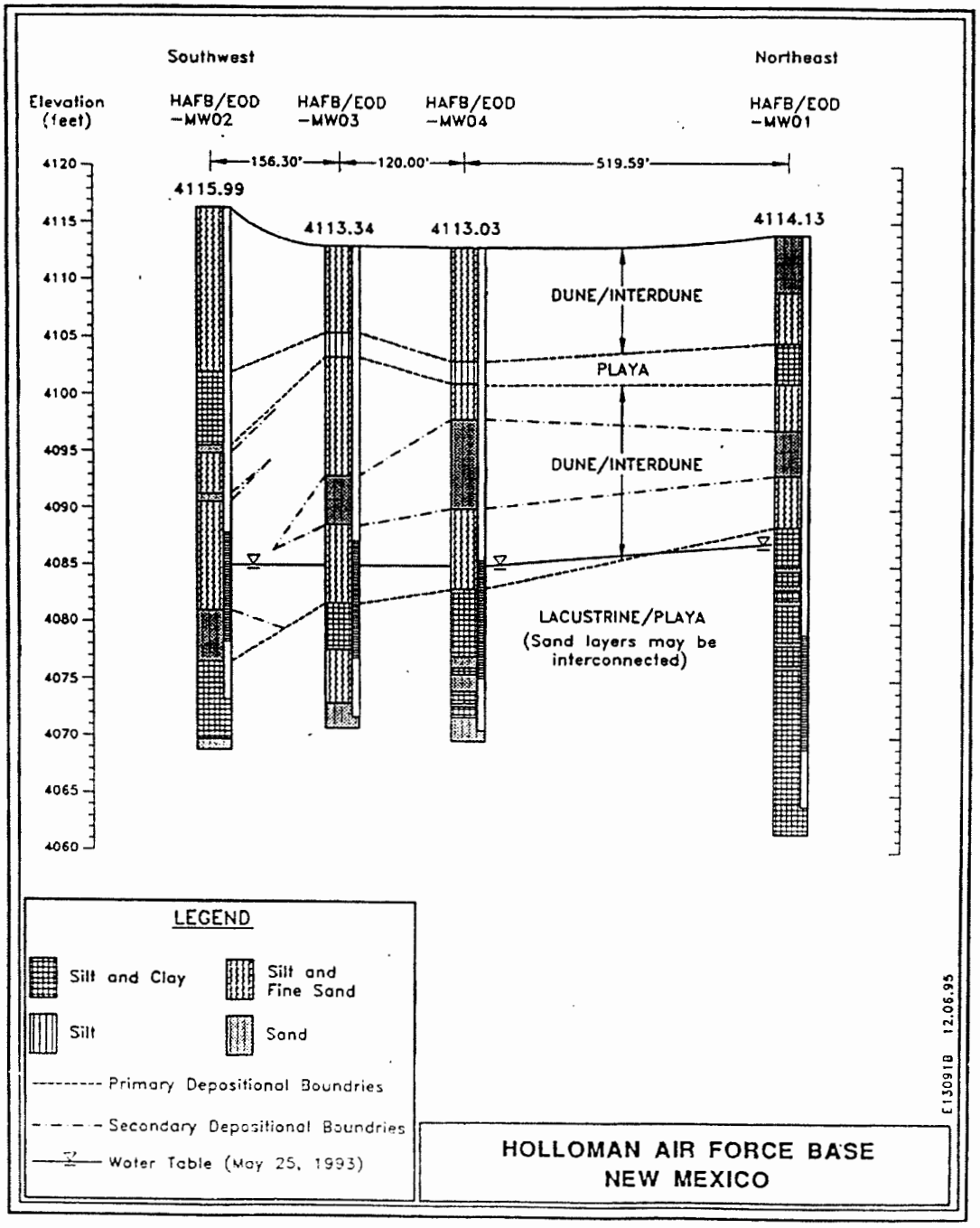

Figure I-2 Geologic Cross Section of the OD Unit Area (After Labat-Anderson, 1993)

I.1.2.2 Water Balance

Low annual precipitation rates coupled with the high evapotranspiration rate means that minimal water infiltrates into the subsurface. With minimal infiltrating water there is minimal potential for leaching of constituents to the uppermost saturated zone.

I.1.2.3 Unsaturated Zone Soil Characteristics

The U.S. Department of Agriculture (USDA) Soil Conservation Service (SCS) has identified soil as the Holloman-Gypsum Land-Yesum complex.

The Holloman-Gypsum Land-Yesum complex, identified by USDA SCS is representative of the surface soil found throughout HAFB (including the OD Unit area). The soils of this association are formed from alluvial and eolian (wind blown) gypsiferous sediments. The Holloman unit makes up about 35 percent of the complex. It is a very fine grained, sandy loam with high gypsum content. The soil is moderately permeable, calcareous, and mildly alkaline.

I.1.2.4 Depth to the Uppermost Saturated Zone

The depth to the uppermost saturated zone decreases from 270 feet below the ground surface (BGS) (or more) near the base of the mountains to less than 40 feet BGS at HAFB. The water table depth beneath the OD Unit ranges from approximately 27 to 31 feet BGS.

I.1.2.5 Saturated Zone Characteristics

Hydrogeologic Characterization

Groundwater occurs in unconfined conditions in the unconsolidated bolson deposits beneath HAFB. The primary source of recharge for groundwater in the bolson fill is percolation of rainfall and stream runoff through the coarse, unconsolidated alluvial fan deposits along the western flank of the Sacramento Mountains. Water migrates downward into the bolson fill and flows downgradient through progressively finer-grained sediments into the basin. The hydraulic gradient is steep along the recharge zones at the base of the mountains, but then flattens out as groundwater migrates into the valley. Groundwater discharge occurs either through evapotranspiration, springs or seeps along steep-sided arroyos, or into closed playa lakes such as Lake Lucero, the regional groundwater discharge area approximately 30 miles southwest of the OD Unit. The regional groundwater flow beneath the OD Unit is southwesterly toward the center of the basin.

Saturated Zone Physical Properties

The saturated zone beneath the OD Unit begins approximately 27 to 31 feet BGS. The cross-section in Figure I-2 shows that the top of the saturated zone at HAFB OD monitoring well MWO1 is located within the upper portion of the silty clay unit. The wells to the south and southwest show that the top of the water table is within the eolian sediments (fine to medium grained silty sand), above the silty clay. This indicates that the downgradient wells are in coarser grained material, with greater permeability and porosity.

Four aquifer slug tests were conducted in the four wells installed during the May 1993 OD Unit investigation (HAFB/EODMW-01, MW-02, MW-03, and MW-04). The data collected were from rising head tests. The Bouwer and Rice analytical method was chosen to analyze the hydraulic conductivity. The computer-generated hydraulic conductivity results are as follows:

- HAFB/EOD-MW-01 = 2.42×10^{-4} feet/minute (ft/min)
- HAFB/EOD-MW-02 = 5.30×10^{-4} ft/min
- HAFB/EOD-MW-03 = 1.03×10^{-4} ft/min
- HAFB/EOD-MW-04 = 1.46×10^{-4} ft/min

I.1.2.6 Existing Groundwater Quality

Overall water quality in the Tularosa Basin varies with the distance from the recharge areas. Regions of groundwater recharge near the mountain escarpments have the best water quality. Wells installed in the alluvial fans that surround the valley floor are used for domestic and agricultural purposes. Water percolating through sediments high in gypsum, limestone, and dolomite becomes highly mineralized. Groundwater in the Tularosa Basin beneath HAFB contains concentrations of total dissolved solids (TDS) ranging from 3,100 milligrams per liter (mg/L) to 41,000 mg/L. Sulfate concentrations range from 1,700 mg/L to 6,700 mg/L. In general, the high concentrations of TDS and sulfate in the Tularosa Basin make groundwater unusable for domestic or agricultural water supplies and can be classified as Class III B groundwater (not considered a source or potential source of drinking water) under EPA guidelines.

At the OD Unit, groundwater samples were collected from the four wells (HAFB/EOD-MW-01, -02, -03, and -04) installed during the 1993 OD Unit investigation and submitted for laboratory analysis.

TDS, chloride, and sulfate concentrations at the OD Unit were all found to exceed New Mexico Human Health Standards (NMHHS). TDS, sulfate, and chloride analytical results from the OD Unit monitoring wells are presented in Table I-2.

According to the New Mexico Water Quality Control Commission Regulations (20.6.1 NMAC, December 1, 1995), the groundwater below the OD Unit is designated as unfit for human consumption because it exceeds NMHHS for TDS, sulfate, and chloride. Furthermore, based on the Base-Wide Background Study (Radian, 1993), the upper tolerance limit for selenium also naturally exceeds the NMHHSs for groundwater.

Table I-2 Summary of Results 20,000-Pound OD Unit Investigation

CONSTITUENT	CONCENTRATION RANGE (mg/L) OD UNIT MONITORING WELLS	NEW MEXICO HUMAN HEALTH STANDARD (mg/L)
Total Dissolved Solids	5,050 – 5,700	1,000
Sulfate	3,300 – 4,100	600
Chloride	565 – 628	250

I.1.2.7 Groundwater Direction and Flow Rate

Based on groundwater elevation measurements collected in May 1993, the direction of groundwater flow beneath the OD Unit is to the southwest. An OD Unit groundwater contour map is presented in Figure I-3. The hydraulic gradient shows that the groundwater drops one vertical foot for every 41.4 feet traversed horizontally. No surface features were found to have an effect on the groundwater flow direction.

Groundwater flow velocity was calculated using a basic advective transport equation derived from Darcy's Law. To compensate for the increasing hydraulic conductivity values southwest of the OD Unit, an average hydraulic conductivity was calculated between the finer grained material (HAFB/EOD-MW-01, -03, and -04) and the coarser grained material (HAFB/EOD-MW-02). Using an average hydraulic conductivity value of 3.47×10^{-4} feet/minute, a groundwater flow velocity of 2.79×10^{-5} feet/minute was calculated. Groundwater at this velocity will flow approximately 14.7 feet per year to the southwest.

I.1.2.8 Proximity to Groundwater Withdrawal Points

No water supply wells are located on HAFB because of the poor water quality. Base potable water supplies are obtained from Bonita Lake and from 21 wells in three separate well fields (Boles, San Andres, and Douglas) located on the western slope of the Sacramento Mountains approximately 10 miles east of HAFB. Production wells in that area intercept groundwater at depths ranging from 250 to 300 feet BGS. The nearest production well downgradient of HAFB is a livestock well located approximately 3.5 miles southwest of the Base. No other downgradient or near-Base potable or irrigation wells exist.

Other chief water users in the Tularosa Basin include the city of Alamogordo and White Sands Missile Range Headquarters. The city of Alamogordo obtains its water from several sources, including Lake Bonita, 60 miles northeast of the basin; developed springs in La Luz, Alamo, and Fresnal Canyons in the Sacramento Mountains; and from wells drilled in alluvial fan deposits at the base of the Sacramento Mountains between Alamogordo and La Luz (located more than 10 miles southeast of the OD Unit). White Sands Missile Range obtains its fresh water supply from alluvial deposits between the Organ and San Andres Mountains, and along the mountain front on the west side of the basin.

It is extremely unlikely that the water in the uppermost saturated zone beneath the OD Unit would ever be used for drinking water, domestic purposes, or irrigation.

I.1.3 WETLANDS

Jurisdictional wetlands are a subcategory of Waters of the U.S. and have been defined by the U.S. Army Corps of Engineers as areas that are inundated or saturated by surface or groundwater at a frequency and duration sufficient to support a prevalence of vegetation typically adapted for life in saturated soil conditions.

No wetlands are located in the vicinity of the OD Unit.

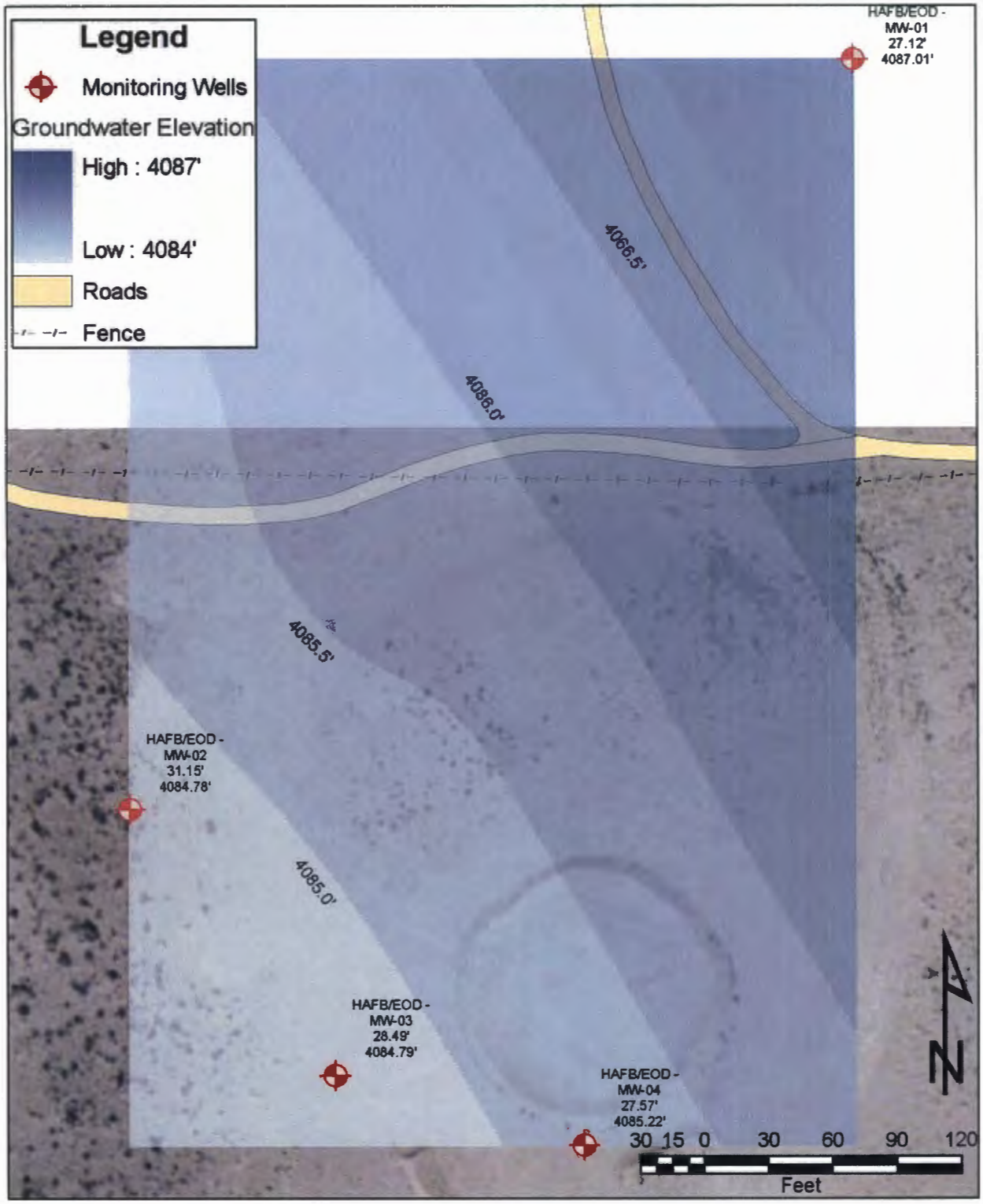

Figure I-3 Potentiometric Groundwater Surface Map at the OD Unit (after Labat-Anderson, 1993)

I.1.4 METEOROLOGICAL CHARACTERISTICS

Estimated Annual Precipitation

The annual precipitation at Holloman AFB averages 7.9 inches, with annual extremes from 2.5 inches to 13.5 inches. The mean annual lake evaporation rate, commonly used to estimate the mean annual evapotranspiration rate, averages an estimated 67 inches per year. The annual net precipitation for the area is approximately -59 inches per year.

Diurnal Temperature Variation

The mean daily temperature variation in the HAFB OD Unit area ranges from an average daily low of 26°F in December to an average daily high of 93°F in July.

Wind roses for the five most recent years are provided in Figures A-7 through A-11.

I.1.5 AIR QUALITY

Federal ambient air quality primary and secondary standards are defined in 40 CFR §50.2b as follows:

> "National primary ambient air quality standards define levels of air quality which the Administrator judges are necessary, with an adequate margin of safety, to protect the public health. National secondary ambient air quality standards define levels of air quality which the Administrator judges necessary to protect the public welfare from any known or anticipated adverse effects of a pollutant" (1976).

EPA has established federal air quality standards for carbon monoxide (CO), lead (Pb), nitrogen dioxide (NO_2), ozone (O_3), particulate matter less than 10 microns in diameter (PM_{10}), particulate matter less than 2.5 microns in diameter ($PM_{2.5}$), and sulfur dioxide (SO_2). These standards are termed the National Ambient Air Quality Standards (NAAQS) and may not be exceeded more than once a year, except for the annual standards, which may never be exceeded. The State of New Mexico has developed the New Mexico Ambient Air Quality Standards (NMAAQS) and has also adopted the NAAQS to regulate some pollutant levels in New Mexico. None of the NAAQS or the NMAAQS has consistently been exceeded at HAFB.

HAFB is located in the State of New Mexico Air Quality Control Region 6. Particulates (primarily windblown dust) are the only air pollutants of concern in the HAFB area. While ambient pollutant concentrations at HAFB are not monitored, HAFB generally has very low concentrations of air pollutants because of good atmospheric dispersion conditions and the absence of continuous emissions. HAFB is in attainment, meaning that no pollutant concentrations exceed the designated federal and State air quality standards. Presently, HAFB and the surrounding areas are in attainment for all of the NAAQS.

I.1.6 VEGETATION AND WILDLIFE

I.1.6.1 Flora

HAFB is dominated by xerophytic shrubland and grassland communities having plant assemblages biogeographically related to the Great Basin and Chihuahuan Desert.

I.1.6.2 Fauna

A wide variety of fauna can be found at HAFB as it provides a relatively diverse range of habitats for both aquatic and terrestrial species. Habitats found on the installation provide ideal environments for a variety of reptiles and amphibians, mammals, and birds. Available habitats include upland grasslands, xerophytic shrublands, brackish marshlands, playas, and surface water habitats.

Previously performed wildlife inventories have identified numerous species of wildlife throughout the installation.

Native big game mammals are uncommon in the project area and include mule deer (*Odocoileus hemionus*) and pronghorn (*Antilocapra americana*). Predators include bobcat (*Lynx rufus*), gray fox (*Urocyon cinereoargenteus*), and coyote (*Canis latrans*). Badger (*Taxidea taxus*) and striped skunk (*Mephitis mephitis*) are uncommon predators and omnivores, respectively. No classes of fauna are negatively impacted by operation of the OD Unit.

I.1.7 THREATENED AND ENDANGERED AND SPECIAL STATUS SPECIES

For purposes of this assessment, sensitive biological resources are defined as those plant and animal species listed as threatened or endangered by the USFWS or the State of New Mexico. There are no federally-listed endangered or threatened species in the vicinity of the OD Unit. Therefore, the Endangered Species Act is not applicable to the OD Unit activities. A copy of the response from the U.S. Fish and Wildlife Service (USFWS) regarding this issue is included in Exhibit I-1. There are no state-listed threatened or endangered species in the vicinity of the OD Unit.

Species with protected status are included in Table I-3: (1) federally listed threatened and endangered species; and (2) state listed species.

- Federally Listed Threatened and Endangered Species. The ESA of 1973 provides protection to species federally listed as endangered or threatened. Endangered species are those species that are at risk of extinction in all or a significant portion of their range. Threatened species are those that could be listed as endangered in the near future.

- State Listed Wildlife and Plants. The State of New Mexico maintains its own list of state endangered, threatened, and sensitive wildlife species.

Table I-3 Threatened and Endangered Species in Vicinity of Holloman

Common Name	Scientific Name	Status	Potential for occurrence
Mammals			
Spotted bat	*Euderma maculatum*	ST	Present on HAFB; very unlikely to occur in project area based on habitat associations
Birds			
American peregrine falcon	*Falco peregrinus anatum*	ST	Present on HAFB (documented at Lake Holloman); occurrence in project area is possible, unlikely to be affected.
Northern aplomado falcon	*Falco femoralis septentrionalis*	SE, FE, Sec10(j)	Nonessential Experimental Population (NES). Present on HAFB; occurrence in project area is possible (has been documented about 3-5 miles to the north)
Snowy plover	*Charadrius alexandrinus*	FE	Present on HAFB; occurrence in project area is possible, unlikely to be affected.
Interior least tern	*Sterna antillarum athalassos*	SE, FE	Present on HAFB. Occurrence in project area is unlikely.
Southwestern willow flycatcher	*Empidonax traillii extimus*	SE, FE	Unlikely to be present on HAFB
Bell's vireo	*Vireo bellii*	ST	Unlikely to be present on HAFB
Gray vireo	*Vireo vicinior*	ST	Possibly present on HAFB. Occurrence in project area is unlikely.
Baird's sparrow	*Ammodramus bairdii*	ST	Present on HAFB; occurrence in project area is possible, unlikely to be affected.
Fish			
White Sands pupfish	*Cyprinodon tularosa*	ST	Present on HAFB but not in project area

FE = Federal Endangered; FT = Federal Threatened; SE = State Endangered; ST = State Threatened. Sources: HAFB 1998a; Pers. Comm. Dye.

I.2 EXPOSURE PATHWAYS AND RECEPTORS

There are no permanent natural surface waters within the HAFB boundary; therefore, surface water is not considered an exposure pathway. None of the surface water features (lakes, canals, or wastewater lagoon) are located in the vicinity of the OD Unit. The OD Unit area is cleared of vegetation and fenced to keep wildlife from intruding. Therefore, wildlife and vegetation are not considered as receptors.

Because the OD Unit is located in a remote, sparsely populated area and access is controlled, human receptors are limited to personnel performing work at the unit. As described in Attachment H, Sampling and Analysis Plan, HAFB will perform periodic soil sampling at the OD Unit as required by the OD Subpart X permit in order to ensure that contaminants have not been released to the surface at levels that could endanger human health or the environment.

I.3 ENVIRONMENTAL PERFORMANCE STANDARDS

In accordance with 20.4.1.500 NMAC §264.601, a miscellaneous unit must be located, designed, constructed, operated, maintained, and closed in a manner that will ensure protection of human health and the environment. This section presents information on site conditions and measures implemented at the OD Unit to ensure protection of human health and the environment.

I.3.1 PROCEDURES TO PREVENT EXPOSURE

Waste handling and other operational procedures designed to ensure protection of human health are detailed in Attachment F, OD Unit Management, of this permit renewal application. A summary of the procedures and measures implemented is presented below.

- Access to the OD Unit: The public is denied access to the OD treatment unit by a number of mechanisms, including HAFB Security Police and the remoteness of the OD Unit from human habitation. Access is provided to the HAFB EOD personnel only during OD operations. No one is allowed at the OD Unit during open detonation activities.

- Waste Detonation: Before each OD activity, the propellants, explosives, and pyrotechnics (PEP) hazardous wastes are expeditiously placed in the appropriate above ground treatment area, initiation materials are applied, and after retreat by the EOD personnel to a specified safe distance, the ignition is accomplished by remote control. The precise times between PEP arrival and placement, initiator placement and ignition, vary. However, because no waste is stored at the unit, all activities will occur between 7:00 am and 5:00 pm of the same day.

- Post Detonation Inspection: After the OD operation, EOD personnel will return to the treatment unit within 24 hours to inspect for unexploded ordnance (UXO) and kick-outs, when it has been determined that it is safe to do so. This drive time and the required wind speed (greater than 3 knots [5.6 kilometers per hour]) is considered sufficient by EOD procedures to protect the EOD specialists from any gases, vapors, or airborne particulates resulting from the OD operations.

- Management of Waste Residues: Any metal fragments and remnants resulting from OD operations will be collected after every treatment activity. The fragments so collected will be placed into appropriate containers, and handled as Resource Conservation and Recovery Act hazardous waste. The treatment unit currently has no visual indication of ash or other chemical residue.

I.3.2 PROTECTION OF GROUNDWATER

Site conditions and operational procedures that minimize the potential for migration of hazardous waste constituents to the uppermost saturated zone include the following:

- Waste munitions are transported to the OD Unit in their original containers or casings, which are designed for long-term stability and thus ensure that no wastes are inadvertently released to the environment prior to treatment. In addition, no free liquids are included among the wastes treated at the OD Unit.

- All OD Unit waste treatment activities are conducted on the ground surface. No trenches or pits will be excavated to contain the wastes.

- The OD Unit thermal treatment process generally ensures complete destruction of the waste. Residual waste munitions compounds become nonhazardous once detonation occurs. Organic constituents of the wastes are converted to gaseous products such as CO,

CO_2, and NO during thermal treatment, thereby eliminating the hazardous characteristics of the wastes. Explosive compounds generally have very limited solubility in water, further minimizing potential for vertical leaching.

- The metal debris remaining after thermal treatment of the wastes is typically present in elemental states or as oxides that are insoluble or of limited solubility in water, thus eliminating the potential for metallic compounds to migrate through the soil or into surface water or groundwater. An inspection of the OD Unit is conducted 24 hours after detonation. During the inspection, metal fragments are collected and placed in appropriate containers for disposal or recycling as appropriate.

- The low precipitation rate for the area results in a negligible driving force for hazardous waste contaminant migration. The annual precipitation at HAFB averages 7.9 inches. The mean annual evapotranspiration rate averages an estimated 67 inches per year, resulting in a net annual precipitation rate for the area of approximately -59 inches per year.

- At all four monitoring well locations near the OD Unit (Figure A-4), a low permeability silt/silty clay unit was encountered between 10 to 15 feet deep. Drilling records indicate that this unit ranges from approximately 2 to 7 feet thick. This low permeability unit acts as a barrier that prevents or minimizes any potential vertical hazardous waste contaminant migration.

- The depth to the uppermost saturated zone beneath the OD Unit ranges from 27 to 31 feet BGS. Because the net annual precipitation rate averages an estimated -59 inches per year, it is extremely unlikely that hazardous waste contaminants could migrate to the uppermost saturated zone.

Assessment of Groundwater Migration Potential

This section presents information on the potential for migration of contaminants within the uppermost saturated zone. In summary, migration of contaminants within the uppermost saturated zone is considered negligible because of the following:

- An approximate groundwater flow velocity of 14.7 feet per year and hydraulic conductivity values averaging 3.47×10^{-4} feet/minute suggest an extremely low potential for hazardous waste contaminant migration in the uppermost saturated zone. Contaminants seldom move at the advective transport velocity of groundwater and generally move at much slower rates because of adsorption to soil particles and other processes;

- Natural TDS, chloride, and sulfate concentrations at the OD Unit all exceed the NMHHS. According to the New Mexico Water Quality Control Commission Regulations (20.6.1 NMAC, December 1, 1995), the groundwater below the OD Unit is designated as unfit for human consumption because it exceeds NMHHS for TDS, sulfate, and chloride. Furthermore, based on the Base-Wide Background Study (Radian, 1993), the upper tolerance limit for selenium also naturally exceeds NMHHS standards for groundwater;

- No water supply wells are located on the Base due to poor water quality. The nearest well of any kind is a livestock water supply well located approximately 3.5 miles southwest of the Base; and

- There is no risk associated with the groundwater in the vicinity of the OD Unit since the resource is not used as a domestic, industrial, or agricultural water supply and in all likelihood will never be used as a resource.

I.3.3 PROTECTION OF SURFACE WATER, WETLANDS AND SOIL SURFACE

Exposure of humans or other environmental receptors to hazardous waste or hazardous constituents via surface water, wetlands, or the soil surface is unlikely based on the following factors:

- Hazardous wastes treated at the OD Unit are in solid form and transported to the unit in their original containers or casings minimizing the potential for spills.

- The maximum quantity of hazardous waste to be treated during any detonation event is limited to 20,000 pounds of net explosive weight (NEW).

- The OD Unit is located in a secure area within HAFB, and only authorized personnel have access to the unit.

- There are no surface water bodies in the vicinity of the OD Unit. The nearest surface water body is Lake Holloman located approximately 10 miles (16 kilometers) from the OD Unit.

- Soils at the OD Unit are sampled periodically and analyzed for constituents of concern. Historical analytical data (presented in Attachment H) indicate that analytical results are below New Mexico Soil Screening Levels.

- There are no wetlands within the HAFB installation boundary.

Based on these factors the potential for adverse effects on human health and the environment due to migration of hazardous waste or hazardous constituents in surface water, wetlands, or on the soil surface is not likely.

I.3.4 PROTECTION OF THE ATMOSPHERE

Exposure of humans or other environmental receptors to hazardous waste or hazardous constituents via the air due to OD Unit operations is unlikely. This subsection presents information that supports this conclusion.

Potential for Emission

There is minimal potential for the release of any gases, aerosols, or particulates from the OD activities into the air that would adversely affect human health or the environment. At least a

5-mile (8-km) radius surrounding the OD treatment unit is barren, undeveloped, and uninhabited. The primary concern is the impact of the waste constituents on soil around the OD Unit.

However, since minimal potential exists for particulates in soil to be released into the air, perimeter soil samples will be collected surrounding the area of operation, as described in Attachment H, Sampling and Analysis Plan. If contaminant concentration levels above background are reported for soil samples, a risk assessment as described in the permit Module III, Section E., will be completed; and air and ground water monitoring will be conducted. The results of air modeling are presented in Attachment J.

Effectiveness of Control

Current OD operations are conducted in designated areas within the treatment unit. The destruction of the explosive and propellant devices is nearly 100 percent because they are designed to explode or burn. Unlike other installations that treat explosive contaminated materials, for example, this unit treats only explosive and propellant products. OD treatment efficiency is sufficient that these control systems should protect human health and the environment. To prove this, the Waste Analysis Plan and Sampling and Analysis Plan described in Permit Attachments B and H, respectively, will be implemented to establish soil quality and minimize the potential spread of contamination.

Operational Conditions

OD operations are conducted only during favorable wind conditions as described below.

No treatment operation will be conducted during an electrical storm or when such a storm is approaching within 10 miles (16 kilometers) of the OD Unit. Additionally, disposal by detonation using an electrical firing system will not be conducted during sand, dust, or snow storms.

It is recognized that weather factors are interdependent. The following safety precaution will be observed:

1. Wind speed will not be less than 3 miles per hour and will not exceed 15 miles per hour (5 and 24 kilometers per hour, respectively).

Existing Air Quality/Other Sources/Receptors

The air quality in Otero County, New Mexico where the subject site is located is in compliance with air quality standards. Otero County is in attainment with the National Ambient Air Quality Standards. The 20,000-Pound OD Unit at HAFB is in an attainment area, and the surrounding air quality is good.

Operations at the OD treatment unit are not expected to adversely impact the air quality of Otero County. OD treatment activities are very efficient and, particularly at this remote site, are not expected to degrade air quality so as to impact the environment or human health.

The potential public receptors in the area are far removed (at least 5 miles [8 kilometers]) from the site. The HAFB EOD team members who will conduct the treatment operations will be at safe distances for the OD unit. Vehicle traffic due to OD operations has negligible impact on air quality.

In conclusion, OD operations are very efficient due to the reactive nature of the hazardous PEP, and there are no receptors in close proximity to the OD treatment unit. Current air quality is excellent and will not be significantly impacted by OD Unit operations.

I.3.5 MONITORING, INSPECTION, AND REPORTING

Monitoring, inspection, and reporting activities performed at HAFB in compliance with the regulatory requirements of 20.4.1.500 NMAC §264.602 are described in this section.

I.3.5.1 Monitoring

Monitoring activities performed at the OD Unit include routine inspections and sampling that is reported in annual environmental monitoring reports to the NMED. Quarterly soil sampling performed at the OD Unit during the past five years has not indicated contamination attributable to OD Unit operations.

The treatment process at the OD Unit effectively destroys the wastes. In order to monitor potential contamination from treatment residues, HAFB will continue to sample soils at the OD Unit as indicated in the Sampling and Analysis Plan (Attachment H of this Part B permit renewal application).

I.3.5.2 Inspection

The OD Unit is inspected on a regular basis according to the the requirements of 20.4.1.500 NMAC §§264.15 and 264.33. The Inspection Schedule included as Attachment C of this application details the types and frequency of inspections performed to assure the integrity, maintenance and safe operation of the OD Unit.

I.3.5.3 Recordkeeping and Reporting

Operating records and documents associated with the OD Unit and required by 20.4.1.500 NMAC §264.602 are maintained at the HAFB Environmental Department office. The following is list of the documents:

- Operating log that describes the type and quantity of hazardous waste treated in the OD treatment unit and the date the waste was detonated;
- Records and results of waste analyses performed as specified in 20.4.1.500 NMAC §264.13;
- Reports of any incidents that required the activation of the contingency plan;
- Facility closures, as specified in 20.4.1.500 NMAC §264.115

- Inspection logs for the last three years;
- Records of monitoring, testing, analytical data, and any corrective actions taken to prevent or mitigate releases of hazardous waste to the environment;
- Disposal requests and Land Disposal Restriction Certifications for hazardous waste transported to a permitted facility;
- A copy of the Contingency Plan;
- A copy of the OD permit;
- Correspondence and other documents from governmental agencies that affect the OD treatment unit; and
- Biennial Report in accordance with 20.4.1.500 NMAC §264.75.

Additionally, training records for EOD personnel are maintained at the EOD office.

I.4 REFERENCES

CH2MHill, 1992

Freehling, et al., 1999

Frey and Yates, 1996

HAFB, 1998a (endangered species table)

HAFB, Integrated Natural Resources Management Plan

ICF Kaiser and Labat Anderson, 1993

Johnson, et al., 1997a

Johnson, et al., 1997b

Mehlhop, et al., 1998

Radian, 1993

Root and Demarais, 1997

Suminski, 1977

Turner, 1987

United States Air Force, 1996. Delineation of Jurisdictional Waters of the United States and Wetlands on Holloman Air Force Base, New Mexico.

United States Department of Interior, 1996

EXHIBIT I-1

Letter from the U.S. Fish and Wildlife Service Regarding Endangered Species

-----Original Message-----
From: Eric_Hein@fws.gov [mailto:Eric_Hein@fws.gov]
Sent: Thursday, July 20, 2006 1:39 PM
To: Dye Jeanne L Civ 49 CES/CEV
Subject: Re: FW: Figure G-4(mod-For Jeanne).pdf

Ms. Dye:

I received your July 19, 2006, request for our review of the proposed permit renewal for Holloman AFB Open Detonation (OD) operation. It is my understanding this site has been operating for about 10 years and that surveys in the project area have not located any threatened or endangered species or their habitat.

You requested that we provide you with any concerns regarding environmental impacts from your proposed action. Based on the location of the proposed project we have no concerns regarding impacts to threatened and endangered species. There are no listed species or habitat present on or near the project location. However, we appreciate your asking for our input on this and other projects. If you have any questions in regard to our review of the project, please contact me.

Thank you.

Eric

Eric W. Hein
U.S. Fish and Wildlife Service
2105 Osuna NE
Albuquerque, New Mexico 87113
505-761-4735; 346-2542 (fax)

"Dye Jeanne L Civ 49 CES/CEV" <Jeanne.Dye@hollo man.af.mil>

To <Eric_Hein@fws.gov>

cc

07/19/2006 03:56 PM

Subject FW: Figure G-4(mod-For Jeanne).pdf

DRAFT

ATTACHMENT J
AIR QUALITY DISPERSION MODELING ANALYSIS

HOLLOMAN AIR FORCE BASE
20,000-POUND OPEN DETONATION TREATMENT UNIT

Permit No. NM6572124422

ATTACHMENT J
AIR QUALITY DISPERSION MODELING ANALYSIS

J.1 INTRODUCTION

Holloman AFB (HAFB) maintains and operates an Open Detonation (OD) treatment unit, rated for up to 20,000 pounds net explosive weight (NEW), north of the Test Track, west of Range Road 9, and near the 1952 demarcation between White Sand Missile Range (WSMR) and HAFB administrative units of the Joint Service Range.

The dispersion modeling conducted for renewal of the permit indicates that criteria pollutant emissions will not exceed the National Ambient Air Quality Standards (NAAQS) at approximately 2,000 meters distance north from the HAFB property boundary. This distance overlaps onto the WSMR side of the 1952 division of the Alamogordo Bombing and Gunnery Range that separated the administration of the range into WSMR and HAFB units. HAFB has operational control over the restricted access area equivalent to the unsurveyed Sections 1, 2, and 3 of Township 15 South, Range 8 East, and the South ½ of the South ½ of Section 35, Township 14 South, Range 8 East, New Mexico Prime Meridian (NMPM).

This attachment presents the results of the air quality dispersion modeling analysis performed for HAFB and describes specific procedures used in the analysis. The analysis was conducted to determine the impacts of the emissions from the 20,000-Pound OD Unit located at the site. The following sections describe the modeling approach followed by a description of the results.

J.2 DESCRIPTION OF AIR QUALITY MODELS USED

The Open Burn/Open Detonation Dispersion Model (OBODM 1.3) was selected to evaluate the potential air quality impacts of open burning and detonation of energetic waste at HAFB. OBODM is used to predict peak concentration, time-mean concentration, dosage, and gravitational deposition for emissions from open burn and detonation sources for either a single event or up to one year of sequential hourly sources and meteorological inputs. OBODM uses either theoretical emission factors predicted by products of combustion models or empirical emission factors derived from measurements in the Dugway Proving Ground BangBox™. OBODM predicts the downwind transport and dispersion of pollutants using cloud rise and dispersion algorithms from models such as the U.S. Environmental Protection Agency's (EPA's) Industrial Source Complex (ISC) dispersion model, Rocket Exhaust Effluent Dispersion Model (REEDM), and the Dugway Proving Ground's Real-Time Volume Source Dispersion Model (RTVSM). OBODM is specifically designed for open detonation and is the most appropriate model for this application.

J.3 SOURCE CHARACTERISTICS

The OD Unit at HAFB is currently operated on an intermittent basis for treatment of energetic hazardous waste items. Nearly all of the energetic wastes are transformed into gaseous or particulate form. The time required for the detonation process consists of two components:

- Waste placement and stacking (1 to 8 hours)
- Detonation inspection (1 hour)

The emissions associated with the process are nearly instantaneous due to the nature of the treatment process. The maximum permitted annual detonation mass is 420,000 pounds NEW, and the maximum single permitted detonation mass is 20,000 pounds NEW. Based upon the time required for completion of the detonation process, one 20,000-pound NEW detonation per day at 9:00 a.m. was used in the modeling analysis. TNT (2,4,6-Trinitrotoluene) was chosen to represent the worst case 20,000-pound NEW.

J.4 MODEL OPTIONS

OBODM has various options to simulate a variety of dispersion conditions for emissions from an open burning or open detonation event. The OBODM options used in the dispersion modeling analysis for HAFB are as follows:

- Final cloud rise height used for all calculation distances
- Instantaneous sources can use both stable and adiabatic plume rise
- Hours with calm wind speeds result in zero dispersion/deposition
- Missing meteorological data hours result in zero dispersion/deposition
- Flat terrain
- Grid system origin is added to source rectangular coordinates
- Instantaneous release (2.5 second burn time)
- 9:00 a.m. detonation time
- Material or fuel/explosive = TNT (2,4,6-Trinitrotoluene).

J.5 TOPOGRAPHIC SETTING

HAFB is located in Otero County, New Mexico. The OD Unit is located near the northern HAFB property boundary, surrounded by the White Sands Missile Range (WSMR). The base elevation at the OD Unit is approximately 1,250 meters (m) above mean sea level (amsl). The area surrounding the OD Unit is relatively flat. As a result, terrain elevations were not incorporated into the air quality modeling analysis.

J.6 LAND USE DETERMINATION AND DISPERSION COEFFICIENTS

The Auer land use classification method is typically used to determine the dispersion characteristics. The purpose of the analysis is to determine whether to use rural or urban dispersion coefficients with the modeling analysis. The Auer technique established four primary land use types: industrial, commercial, residential, and agricultural. Industrial, commercial, and compact residential areas are classified as urban, while agricultural and common residential areas are considered rural. For modeling purposes, an area is defined as urban if more than 50 percent of the surface within 3 kilometers of the source is classified as an urban land use type. Otherwise, the area is determined to be rural. A qualitative review of the United States Geological Survey (USGS) 7.5-minute quadrangle of the area surrounding the HAFB OD Unit revealed that the area is clearly rural. Therefore, rural dispersion coefficients were used for this analysis. Figure J-1 shows the area within 3 kilometers of the OD Unit.

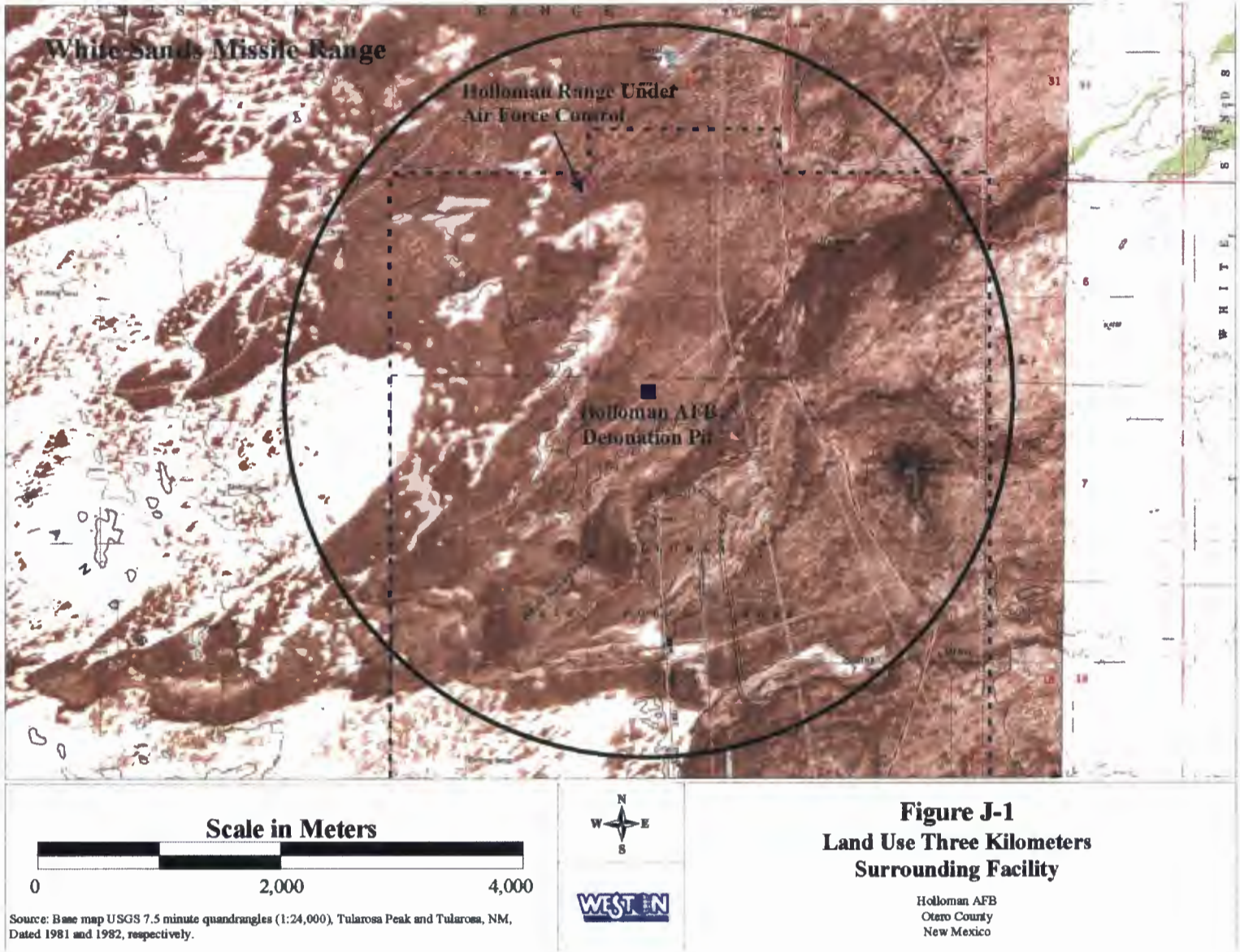

Figure J-1 Land Use Three Kilometers Surrounding Facility

J.7 RECEPTOR GRID SELECTION

A Cartesian receptor grid was used as the main receptor grid. Receptors were spaced as follows:

- 100 meter spacing from OD Unit location to 1500 meters
- 500 meter spacing from 1500 meters to 3,000 meters
- 1,000 meter spacing from 3,000 meters to 10,000 meters.

In addition, the above spacing was used along the HAFB northern, eastern, and western property boundaries surrounding the OD Unit.

J.8 METEOROLOGICAL DATA

The meteorological database for the OBODM consisted of five years (1985, 1987, 1988, 1990, and 1991) of surface data collected at Roswell, New Mexico. Coincident mixing heights were derived by merging surface temperatures with concurrent twice-daily rawinsonde data obtained from El Paso, Texas. The surface and upper air data were obtained directly from the EPA SCRAM website. The surface and upper air files were processed using the EPA's meteorological pre-processor PCRAMMET (version 99169).

J.9 BACKGROUND

Background concentrations for total suspended particulate (TSP) and particulate matter less than 10 micrograms in diameter (PM10) were obtained directly from the New Mexico Air Quality Bureau (NMAQB) Air Dispersion Modeling Guidelines, February 2006. Background values for the other criteria pollutants modeled were not available. The background values are presented in Table J-1.

Table J-1 Background Values
($\mu g/m^3$)

Pollutant	Annual	24-hour
TSP	26.6	26.6
PM_{10}	20	20

J.10 SUMMARY OF AIR QUALITY MODELING RESULTS

The maximum modeling results are presented in Table J-2. Table J-2 shows that the predicted maximum concentrations of carbon monoxide (CO) (8-hour and 1-hour averaging periods), nitrogen dioxide (NO2) (annual averaging period), lead (Pb) (quarterly averaging period), and sulfur dioxide (SO2) (annual, 24-hour and 3-hour averaging periods) will not exceed the NAAQS or the NMAAQS. TSP and PM10 (annual averaging period) do not exceed the NAAQS or NMAAQS at off-site receptors. The high second high (HSH) 24-hour TSP and PM10 concentrations do not exceed the NAAQS or NMAAQS at off-site receptors. The concentrations shown in Table J-2 for TSP and PM10 are the largest modeled annual and HSH 24-hour concentrations at the HAFB property boundary. Annual concentrations are based on the annual limit of 420,000 pounds. HAFB has operational control over all areas with air quality impacts.

Figure J-1 shows the area of HAFB operational control. The concentrations of all other criteria pollutants shown in Table J-2 are the maximum predicted off-site concentrations. None of the maximum predicted values are at off-site receptors.

Table J-2 OBODM Modeling Results from Open Detonation Unit[a]
Holloman AFB, New Mexico

	Pollutant											
	CO		Lead (Pb)	NO_2		TSP[b]		PM_{10}		SO_2		
	8-hr	1-hr	Quarterly	Annual	24-hr	Annual[f]	24-hr[g]	Annual[f]	24-hr[g]	Annual	24-hr	3-hr
	($\mu g/m^3$)	($\mu g/m^3$)	($\mu g/m^3$)	($\mu g/m^3$)	($\mu g/m^3$)	($\mu g/m^3$)	($\mu g/m^3$)	($\mu g/m^3$)	($\mu g/m^3$)	($\mu g/m^3$)	($\mu g/m^3$)	($\mu g/m^3$)
Facility	88.5	702	1.21E-03	0.075	2.2	0.19	101	0.19	101	0.014	0.41	3.3
Background[c]	-	-	-	-	-	26.6	26.6	20	20	-	-	-
Total[d]	88.5	702	1.21E-03	0.075	2.2	27	128	20	121	0.014	0.41	3.3
NAAQS	10,000	40,000	1.5	100	-	-	-	50	150	80	365	1,300
NMAAQS[e]	8,681	13,072	-	82	164	60	150	-	-	46	228	-

Notes:

a Open Burn/Open Detonation Dispersion Model (OBODM). Assumed worst case of instantaneous 20,000-pound TNT detonation per day, 365 days/year. Detonation occurred at 9:30 a.m. each day. Five years (1985, 1987, 1988, 1990, 1991) of meteorogical data used, surface measurements from Roswell, NM merged with upper air soundings from El Paso, TX.
b OBODM only models PM_{10}, assumed TSP=PM_{10}.
c Background values from New Mexico Air Quality Bureau (NMAQB) Air Dispersion Modeling Guidelines, February 2006.
d Total = Facility predicted concentration + Background.
e Approximate equivalent concentration, based upon Section 2.5.1 of NMAQB Air Dispersion Modeling Guidelines, February 2006.
f Maximum at the property boundary.
g High Second High (HSH) at the property boundary.