DEPARTMENT OF THE AIR FORCE
HEADQUARTERS 49TH FIGHTER WING (ACC)
HOLLOMAN AIR FORCE BASE, NEW MEXICO

ENTERED

RECEIVED
SEP 2009
NMED Hazardous Waste Bureau

A. David Budak
Deputy Base Civil Engineer
550 Tabosa Avenue
Holloman AFB NM 88330-5840

09-22-2009 A11:07

New Mexico Environment Department
Attn: Mr. James Bearzi
Hazardous Waste Bureau
2905 Rodeo Park Drive East
Santa Fe NM 87105-6303

Dear New Mexico Environment Department

Holloman AFB is pleased to submit the SWMU-183 Final RCRA Facility Investigation Work Plan for your review.

I certify under penalty of law that this document and all attachments were prepared under my direction or supervision according to a system designed to assure that qualified personnel properly gather and evaluate the information submitted. Based on my inquiry of the person or persons who manage the system, or those persons directly responsible for gathering the information, the information submitted is, to the best of my knowledge and belief, true, accurate, and complete. I am aware that there are significant penalties for submitting false information, including the possibility of fine and imprisonment for knowing violations.

If you have any questions, please contact Mr. David Scruggs of our Asset Management Flight at (575) 572-5395.

Sincerely

14 Sep 09

A. DAVID BUDAK, YF-3, DAFC

Attachment:
SWMU-183 RFI Work Plan

cc:

(w/Atch)
Mr. David Strasser
Hazardous Waste Bureau
5500 San Antonio Dr. NE
Albuquerque, NM 87109

(w/o Atch)
Mr. Will Moats
Hazardous Waste Bureau
5500 San Antonio Dr. NE
Albuquerque, NM 87109

(w/o Atch)
Ms. Laurie King
USEPA, Region 6 (6PD-F)
1445 Ross Ave., Ste 1200
Dallas, TX 75202-2733

FINAL

RCRA FACILITY INVESTIGATION WORK PLAN
SWMU 183 - BASEWIDE SEWER SYSTEM
HOLLOMAN AIR FORCE BASE, NEW MEXICO

Prepared for:

49 CES/CEA
Holloman Air Force Base
New Mexico

Under Contract to:

U.S. Army Corps of Engineers
Albuquerque District, HTRW Branch
4101 Jefferson Plaza Northeast
Albuquerque, New Mexico 87109-3435

Contract No. W912PL-07-D-0050
Delivery Order No. DM01

August 2009

Prepared by:

NATIONVIEW

1608 13th Avenue South, Suite 160
Birmingham, Alabama 35205
NationView Project Number: 8080014

FINAL
RCRA FACILITY INVESTIGATION WORK PLAN
SWMU 183 - BASEWIDE SEWER SYSTEM
HOLLOMAN AIR FORCE BASE, NEW MEXICO

Prepared for:

49 CES/CEA
Holloman Air Force Base
New Mexico

Under Contract to:

U.S. Army Corps of Engineers-
Albuquerque District
HTRW Branch
4101 Jefferson Plaza NE
Albuquerque, New Mexico 87109-3435

Prepared by:

NationView, LLC
1608 13th Avenue South, Suite 160
Birmingham, Alabama 35205
NationView Project No. 8080014.01.15

Contract No. W912PL-07-D-0050
Delivery Order No. DM01

August 2009

FINAL
RCRA FACILITY INVESTIGATION WORK PLAN
SWMU 183 - BASEWIDE SEWER SYSTEM
HOLLOMAN AIR FORCE BASE, NEW MEXICO

REVIEW SHEET

This Work Plan has been reviewed and approved by:

	David D. Martin	8-19-09
David D. Martin Corporate Sponsor	Signature	Date
	Jim Moore	August 19, 2009
Jim Moore, P.G. Project Manager	Signature	Date
	Frank Gardner	August 19, 2009
Frank Gardner, P.G. Program Manager	Signature	Date

This page intentionally left blank.

PREFACE

As a result of a New Mexico Environment Department (NMED) Notice of Disapproval (NOD) letter dated May 14, 2009 (see Attachment A), the previously submitted *Final Triad Approach Dynamic Work Plan RCRA Facility Investigation SWMU 183 – Basewide Sewer System, Holloman AFB, New Mexico* (Stone Environmental, Inc., 2008) has been substantially revised following a more traditional U.S. Environmental Protection Agency (USEPA) Resource Conservation and Recovery Act (RCRA) Facility Investigation approach. Therefore, all references to utilizing the triad dynamic investigative approach including onsite laboratory analysis and field testing (e.g. immunoassay) have been removed from the work plan. Due to these extensive revisions, and as discussed during a July 7, 2009, meeting with Mr. David Strasser and Ms. Dezbah Tso (NMED Hazardous Waste Bureau), this work plan is being resubmitted to the NMED without the customary redline strikeout revisions. The changes to this work plan are so substantial (whole sections have been rewritten) that it was mutually agreed at the referenced meeting to include this preface. Furthermore, a redline strikeout version would be time consuming to review as well as difficult to understand and implement in the field. Therefore, this preface was placed in this version to alert potential reviewers regarding the previously submitted version and why this version was not prepared as a redline strikeout.

A detailed response to each of the NMED comments provided in the Notice Of Disapproval (NOD) letter (HWB-HAFB-08-003) dated May 14, 2008 are included in Attachment A. An explanation of the revisions noted in the NOD letter is provided in the response to comments in order to expedite the substantive changes requested in the NOD.

This page intentionally left blank.

FINAL
RCRA FACILITY INVESTIGATION WORK PLAN
SWMU 183 - BASEWIDE SEWER SYSTEM
HOLLOMAN AIR FORCE BASE, NEW MEXICO

TABLE OF CONTENTS

1 INTRODUCTION 1-1
1.1 RFI Work Plan Organization 1-1
1.2 RCRA Permit Required RFI Tasks 1-2
1.3 Project Objectives 1-3
1.4 Data Quality Objectives 1-3
1.5 Facility Description 1-4
1.6 Facility Operation History 1-5
1.7 Industrial Activities and Waste Generation 1-6
1.8 Nature and Extent of Any Known Contamination 1-6
1.9 Summary of Interim Measures and Past Assessments 1-7
1.9.1 Industrial Wastewater Pretreatment Study 1-7
1.9.2 Inflow and Infiltration Study 1-8
1.9.2.1 Structural Condition 1-8
1.9.2.2 Hydraulic Condition 1-8
1.9.2.3 Steady Infiltration 1-8
1.9.2.4 Stormwater Inflow and Infiltration 1-9
1.9.3 RCRA Facility Investigation Planning 1-9
1.9.4 Environmental Assessment for Wastewater Utilities Privatization 1-10
1.9.5 OWS Removals 1-10
2 ENVIRONMENTAL SETTING 2-1
2.1 Physiography and Topography 2-1
2.2 Climate 2-1
2.3 Surface Water and Hydrology 2-1
2.4 Regional Geology 2-3
2.5 Regional Hydrogeology 2-4
2.6 Soils 2-5
2.7 Site-Specific Setting 2-6
3 SOURCE CHARACTERIZATION 3-1
3.1 The HAFB Sanitary Sewer System and Wastewater Treatment Plant 3-1

3.2 Physical Condition of the Sewer System 3-1
3.3 Waste Characteristics 3-2
3.4 Sewer System RFI Sampling Strategy 3-2

4 POTENTIAL RECEPTORS 4-1

4.1 Current Local Uses and Planned Future Uses of Groundwater 4-1
4.2 Current Local Uses and Planned Future Uses of Surface Waters Directly Impacted by the Facility 4-1
4.3 Potential Human Receptors 4-1
4.4 Potential Biological Receptors 4-2
4.4.1 Flora 4-2
4.4.2 Fauna 4-2
4.4.2.1 Invertebrates 4-3
4.4.2.2 Reptiles and Amphibians 4-3
4.4.2.3 Mammals 4-3
4.4.2.4 Birds 4-4
4.5 Endangered or Threatened Species 4-4
4.5.1 Endangered Species 4-4
4.5.2 Threatened Species 4-5
4.5.2.1 Burrowing Owl 4-5
4.5.2.2 White Sands Pupfish 4-5

5 INITIAL CONCEPTUAL SITE MODEL 5-1

5.1 Initial CSM Development 5-1
5.2 Initial CSM Summary Description 5-1
5.3 Summary of Previous Data 5-1
5.4 Suspected Sewer Release Locations 5-2
5.5 HAFB Setting 5-2
5.6 SWMU 183 Soil and Groundwater Conditions 5-3
5.7 Contaminants of Potential Concern 5-3
5.7.1 Release Mechanisms 5-4
5.7.2 Contaminant Fate and Transport 5-5
5.7.3 Potential Exposure Pathways and Receptors 5-6
5.8 Existing Data Gaps 5-6
5.8.1 Data Acquisition 5-6
5.8.2 Data Evaluation 5-7
5.8.3 Risk Based Evaluation 5-7
5.9 Initial CSM Summary 5-7

6 SAMPLING AND ANALYSIS PLAN FOR CHARACTERIZATION OF RELEASES OF HAZARDOUS WASTE 6-1

6.1 Pre-investigation Requirements 6-1
6.1.1 AF Form 332 6-1

6.1.2 Dig Permit/Utility Clearances 6-2
6.1.3 Site Security 6-2
6.2 Sampling Strategy 6-2
6.2.1 Use of Applicable or Relevant and Appropriate Requirements 6-3
6.2.1.1 Soils 6-3
6.2.1.2 Groundwater 6-5
6.2.2 Field Sampling Location Plan Design Basis 6-6
6.2.2.1 Phase I Soil Borings – Sewer Release Determination 6-7
6.2.2.2 Phase II Monitoring Well Installation – Groundwater Impact Determination 6-7
6.3 Sampling Procedures 6-8
6.3.1 Environmental Media to be Sampled 6-8
6.3.2 Soil Sampling 6-9
6.3.2.1 Geotechnical Data 6-10
6.3.2.2 Direct Push Technology Soil Sampling (Phase I) 6-11
6.3.3 Groundwater Investigation (Phase II) 6-12
6.3.3.1 DPT Monitoring Well Installation 6-13
6.3.3.2 Hollow Stem Auger Monitoring Well Installation 6-15
6.3.4 Groundwater Sampling 6-16
6.3.4.1 Groundwater Elevations 6-16
6.3.4.2 Surveying 6-17
6.3.5 Documentation 6-17
6.3.6 Decontamination 6-17
6.3.7 Management of Investigation-Derived Waste 6-18
6.4 Sample Analysis 6-18
6.4.1 Data Quality Objectives 6-19
6.4.2 Offsite Laboratory Analytical Methods 6-20

7 RISK ASSESSMENT APPROACH 7-1

7.1 Evaluation of COPCs 7-1
7.2 Risk Based Evaluation 7-2
7.2.1 Review of Available Analytical Data 7-2
7.2.2 Revision of the Conceptual Site Model 7-2
7.2.3 Development of the Exposure Model 7-3
7.2.4 Preliminary Screening Evaluation 7-3
7.2.5 Calculation of Site-Specific SSLs 7-3
7.2.6 Site-Specific Screening Level Evaluation 7-4

8 DATA MANAGEMENT PLAN 8-1

8.1 Data Management System and Strategy 8-1
8.2 Data Type 8-1
8.2.1 Sample Identification System 8-1
8.2.2 Data Recording 8-2
8.2.2.1 Field Data 8-2
8.2.2.2 Offsite Laboratory Analytical Data 8-3

8.2.2.3 Photographs....8-4
8.3 Data Reporting....8-4
8.3.1 Tabular Displays....8-4
8.3.2 Graphical Displays....8-5
8.4 Data Archiving....8-6

9 HEALTH AND SAFETY REQUIREMENTS....9-1

10 PROJECT MANAGEMENT PLAN AND SCHEDULE OF IMPLEMENTATION....10-1

10.1 Management Control Structure....10-1
10.2 Reporting....10-2
10.3 Records Management....10-3

11 REFERENCES....11-1

Figures

Figure 1-1 Holloman AFB, New Mexico Location Map
Figure 1-2 SWMU 183 Site Location Map
Figure 2-1 Surface Drainages, Holloman AFB
Figure 2-2 Basewide Groundwater Flow Direction, Holloman AFB
Figure 2-3 Groundwater Wells Located within a 4-Mile Radius of Holloman AFB
Figure 2-4 Soil Map, Holloman AFB, New Mexico
Figure 5-1 Initial Conceptual Site Model Diagram

Plates

Plate 1 Basewide Sewer System RFI, Revised Sampling Locations, Northern Sewer Sub-Basins
Plate 2 Basewide Sewer System RFI, Revised Sampling Locations, Southern Sewer Sub-Basins

Tables

Table 1-1 Status of Oil Water Separator Sites
Table 2-1 Groundwater Well Inventory within a 4-Mile Radius of Holloman Air Force Base
Table 3-1 Borehole Location/ Sampling Rationale
Table 3-2 Potential Contaminants of Concern Discharged to the Sewer System
Table 3-3 Types of Wastewater-Generating Processes
Table 4-1 Plant Species Observed at Holloman Air Force Base
Table 4-2 Herpetofauna Species Observed at Holloman Air Force Base
Table 4-3 Bat Species Observed at Holloman Air Force Base
Table 4-4 Rodent Species Observed at Holloman Air Force Base
Table 4-5 Bird Species Observed at Holloman Air Force Base
Table 6-1 Soil Sampling and Analysis for Sub-Basins 1, 2, 3, 5, 6, 7, and 10

Table 6-2 Soil Sampling and Analysis for Sub-Basin 4
Table 6-3 Soil Sampling and Analysis for Sub-Basin 8
Table 6-4 Soil Sampling and Analysis for Sub-Basin 9
Table 6-5 Sample Containers and Holding Times by Sample Media
Table 6-6 Groundwater Sampling and Analysis for Sub-Basins 1, 2, 3, 5, 6, 7, and 10
Table 6-7 Groundwater Sampling and Analysis for Sub-Basin 4
Table 6-8 Groundwater Sampling and Analysis for Sub-Basin 8
Table 6-9 Groundwater Sampling and Analysis for Sub-Basin 9
Table 10-1 Roles and Responsibilities of Project Team Members

Attachments

A Final Triad Approach Dynamic Work Plan Notice of Disapproval Letter (HWB-HAFB-08-003) and Responses to NMED Comments

Appendices

A HAFB Basewide Quality Assurance Project Plan (QAPP) Addendum

B Historical Data Summaries

C Company Specific Standard Operating Procedures

D Site-Specific Health Addendum to the Basewide and Safety Plan

This page intentionally left blank.

ACRONYMS AND ABBREVIATIONS

AAF	Army Air Field
ACM	Accelerated Corrective Measures
AFCEE	Air Force Center for Engineering and the Environment
AFFF	Aqueous Film-Forming Foam
AF Fm	Air Force Form
AGE	Aerospace Ground Equipment
amsl	Above mean sea level
ANSI	American National Standards Institute
AOC	Area of Concern
ARAR	Applicable or Relevant and Appropriate Requirement
ASTM	American Society for Testing and Materials
bgs	Below ground surface
Bhate	Bhate Environmental Associates, Inc.
BMPs	Best Management Practices
BOD	Biological oxygen demand
CCD	Customer Concept Document
CES/CEA	Civil Engineering Squadron/Environmental Asset Management Flight
CFR	Code of Federal Regulations
CME	Central Mining Equipment
cm/sec	Centimeters per second
CMS	Corrective Measures Study
COC	Contaminant of Concern
COD	Chemical oxygen demand
COPC	Contaminants of Potential Concern
CSM	Conceptual Site Model
DOD	Department of Defense
DOE	Department of Energy
DPT	Direct Push Technology
DQOs	Data Quality Objectives
DRO	Diesel Range Organics
EA	Environmental Assessment
EDD	Electronic Data Deliverable
EERF	Eastern Environmental Radiation Facility
EM	Exposure Model

ACRONYMS AND ABBREVIATIONS (CONTINUED)

ERP	Environmental Restoration Program
ERPIMS	Environmental Restoration Program Information Management System
ESRI	Environmental Systems Research Institute
°F	Degrees Fahrenheit
ft	Feet
FWENC	Foster Wheeler Environmental Corporation
GIS	Geographic Information System
gpd	Gallons per day
GPS	Global Positioning System
GRO	Gasoline Range Organics
HAFB	Holloman Air Force Base
HASP	Health and Safety Plan
HHMSSL	Human Health Medium Specific Screening Level
HI	Hazard Index
HSA	Hollow Stem Auger
IDW	Investigation-Derived Waste
I/I	Infiltration and Inflow
INRMP	Integrated Natural Resource Management Plan
IWPMP	Industrial Wastewater Pretreatment Management Plan
J&E	Johnson & Ettinger
LCS	Laboratory Control Sample
LD	Laboratory Duplicate
LIMS	Laboratory Information Management System
LOCs	Lines of Concern
MCAWW	Methods for Chemical Analysis of Water and Wastes
MCL	Maximum Contaminant Level
MDL	Method Detection Limit
µg/L	Micrograms per liter
MFH	Military Family Housing
MGD	Million gallons per day
mg/kg	Milligrams per kilogram
mg/L	Milligrams per liter
MS/MSD	Matrix Spike/Matrix Spike Duplicate
NAD	North American Datum
NELAP	National Environmental Laboratory Accreditation Program

ACRONYMS AND ABBREVIATIONS (CONTINUED)

NFA	No Further Action
NMAC	New Mexico Administrative Code
NMDGF	New Mexico Department of Game and Fish
NMED	New Mexico Environment Department
NMWRRS	New Mexico Water Rights Reporting System
NOD	Notice of Disapproval
NO_3	Nitrate
NPDES	National Pollutant Discharge Elimination System
NTU	Nephelometric turbidity unit
ORO	Oil Range Organics
OSD	Office of the Secretary of Defense
OSHA	Occupational Safety and Health Administration
OWS	Oil / water separator
PARCC	Precision, accuracy, representativeness, comparability, and completeness
PCBs	Polychlorinated Biphenyls
pCi/g	Pico-curies per gram
pH	Potential of Hydrogen
PID	Photoionization Detector
PMP	Project Management Plan
POLs	Petroleum, oil, and lubricants
PPE	Personal Protection Equipment
PQL	Practical Quantitation Limit
PRG	Preliminary Remediation Goal
PVC	Polyvinyl Chloride
QA/QC	Quality Assurance/Quality Control
QAPP	Quality Assurance Project Plan
QSM	Quality Systems Manual
RBC	Risk Based Concentration
RCRA	Resource Conservation and Recovery Act
RFI	RCRA Facility Investigation
RLs	Reporting Limits
RSL	Regional Screening Level
SAP	Sampling and Analysis Plan
SM	Standard Method
SO_2	Sulfur dioxide

ACRONYMS AND ABBREVIATIONS (CONTINUED)

SOP	Standard Operating Procedure
SSLs	Soil Screening Levels
SVOCs	Semi-volatile organic compounds
SWMU	Solid Waste Management Unit
TAL	Target Analyte List
TAL – DEN	TestAmerica Laboratories, Denver, Colorado
TAL – STL	TestAmerica Laboratories, St. Louis, Missouri
TAT	Turn-around time
TDS	Total Dissolved Solids
TPH	Total Petroleum Hydrocarbons
TSS	Total Suspended Solids
USACE	United States Army Corps of Engineers
USCS	Unified Soil Classification System
USDA	United States Department of Agriculture
USEPA	United States Environmental Protection Agency
USFWS	United States Fish and Wildlife Service
UTL	Upper Tolerance Limit
VOCs	Volatile Organic Compounds
WQCC	Water Quality Control Commission
WRCC	Western Regional Climate Center
WWTP	Wastewater Treatment Plant

1 INTRODUCTION

NationView, LLC (NationView) has been retained by the U.S. Army Corps of Engineers (USACE), under contract W912PL-07-D-0050, Delivery Order DM01 to conduct a Resource Conservation and Recovery Act (RCRA) Facility Investigation (RFI) of Solid Waste Management Unit (SWMU) 183, the basewide sewer system at Holloman Air Force Base (HAFB), New Mexico. This RFI Work Plan contains the site specific sampling plan, evaluation of potential site specific pathways and receptors, field and laboratory procedures, and data and waste management plans. Additionally, the work plan contains a Quality Assurance Project Plan (QAPP) Addendum that directs the offsite analytical laboratory on the quality assurance and quality control (QA/QC) procedures that are required for obtaining useable and defensible RFI data.

This RFI Work Plan provides the relevant site specific requirements as outlined in a Notice of Disapproval (NOD) letter issued by the New Mexico Environment Department (NMED) in May 2009 (included in Attachment A of this Work Plan) for investigation activities at SWMU 183. Responses to the NMED comments are also included in Attachment A of this Work Plan.

The purpose of the SWMU 183 RFI is to collect data necessary to identify and characterize potential releases from the HAFB basewide sewer system and to assess their associated risks, if any. If any releases are identified during the RFI, a risk assessment (described in Section 7 of this Work Plan) will use the RFI analytical data to determine if these subsurface releases pose an unacceptable risk to human health and/or the environment. The SWMU 183 RFI is being performed according to the requirements set forth in the HAFB Hazardous Waste Facility Permit No. NM6572124422; Appendix 4-B RCRA Facility Investigation (RFI) Outline, dated February 2004 (NMED, 2004a).

1.1 RFI Work Plan Organization

This Work Plan will serve as the primary working document for the investigation of potential hazardous waste releases to the subsurface from the basewide sewer system at HAFB (SWMU 183). The Work Plan is organized according to the requirements outline set forth in Appendix 4-B of the HAFB RCRA Permit as follows:

- Section 1 presents a summary of the RFI Approach and its key elements, project and data quality objectives, HAFB background information, and relevant existing assessment data.
- Section 2 details the environmental setting in terms of hydrogeology, soils, surface water, and climate.

- Section 3 provides information on the sewer system as a RCRA SWMU and the types, characteristics, and sources of the wastes moving through the system.
- Section 4 provides information on the human populations and environmental systems as potential receptors that could be affected by a potential release from the sewer system.
- Section 5 presents the Initial Conceptual Site Model (CSM) for the site, including a summary narrative; a detailed outline of CSM elements, including requirements narrative, status and required actions; and a not-to-scale, 3-dimensional block diagram illustrating the major elements of the Initial CSM.
- Section 6 presents the Sampling and Analysis Plan (SAP) for the characterization of sewer-related releases, highlighting the sampling strategy proposed for the RFI effort, as well as the specific sampling procedures, sample analysis, and related sample QA/QC measures to be employed during the performance of the investigation.
- Section 7 describes the Risk Assessment Approach.
- Section 8 describes the data management plan that will be used to support the RFI.
- Section 9 details the health and safety requirements to support the project.
- Section 10 presents the project management plan (PMP), including the project organization, team member roles and responsibilities, and project master schedule.
- Section 11 provides full references of the publications used to support the development of this document.
- Figures, tables, and large plate diagrams are presented together under separate tabs.
- Attachment A contains the NMED NOD letter (HWB-HAFB-08-003) and the responses to comments.
- Appendices A through D provide other key elements of the Work Plan, such as the Basewide QAPP Addendum, historical site data, company specific standard operating procedures, and a Site-Specific Addendum to the Basewide Health and Safety Plan.

1.2 RCRA Permit Required RFI Tasks

Appendix 4-B of the HAFB RCRA permit (NMED, 2004a) provides an outline of the RFI portion of the RCRA corrective action process, the purpose of which is to evaluate the nature and extent of releases of hazardous wastes and/or hazardous constituents and

to gather data to support a Corrective Measures Study (CMS) and/or Interim Measures. The permit requires HAFB to accomplish the RFI through the following progression of tasks:

1. Gather information on the source of the release(s) to the environment (Source Characterization). The results of this task are addressed in Section 3 of this Work Plan.

2. Gather information on the physical aspects of the environment which will affect the migration and fate of the release and identification of exposure pathways for both humans and non-human members of the environment (Environmental Setting). The results of this task are addressed in Section 2 of this Work Plan.

3. Use Source Characterization and Environmental Setting information to develop a conceptual model of the release which will be used to plan and conduct a program to define the nature, rate, and extent of the release (Sampling and Analysis Plan). The results of this task are addressed in Sections 5 and 6 of this Work Plan, respectively.

1.3 Project Objectives

The primary project objectives of the SWMU 183 RFI are to:

1. Identify locations where releases to the environment from the sewer system have occurred,

2. Characterize the nature and extent of contaminants of concern in identified releases to soil and/or groundwater,

3. Collect sufficient analytical data to complete a site specific risk assessment to determine the affect of releases on human health and/or the environment, and

4. Collect the proper data to meet the data quality objectives (DQOs) to support a No Further Action (NFA) Status under NFA Criterion 5 and obtain a Class III permit modification to remove this site from Table A of the HAFB Hazardous Waste Facility Permit No. NM6572124422 (NMED, 2005).

1.4 Data Quality Objectives

The DQO process is designed to generate performance criteria for the collection of new data. Performance criteria represent the full set of specifications that are needed to design a data collection effort such that newly-collected data are of sufficient quality and

quantity to address the primary project objectives outlined above in Section 1.3 of this Work Plan.

The steps of the DQO process are:

1. Define the nature of the problem to be studied and develop a conceptual model of the environmental hazard to be investigated (see Section 5 of this Work Plan).

2. State the decisions or estimates that need to be made.

3. Determine the type(s) of data needed for decision-making.

4. Develop a decision making process that defines how the data will be used to draw conclusions from the investigation results (see Section 6.2 of this Work Plan).

5. Establish acceptable quantitative criteria on the quality and quantity of the data to be collected, relative to the ultimate use of the data. These criteria are known as performance criteria, or DQOs (see Section 6.4 of this Work Plan).

6. Design a data collection program that will generate data meeting the quantitative and qualitative criteria specified in Step 5 which includes:

    a. Type of data (see Section 6.3 of this Work Plan),

    b. Number, location, and physical quantity of samples (see Section 6.2 of this Work Plan)

    c. QA/QC activities to ensure that sampling design and measurement errors are managed sufficiently to meet the performance or acceptance criteria specified in the DQOs. The DQO criteria include measures of precision, accuracy, representativeness, comparability, and completeness (PARCC).

The results of this process are used to develop a QAPP (see the HAFB Basewide QAPP [Bhate Environmental Associates, Inc. (Bhate), 2003a] and the HAFB Basewide QAPP Addendum included in Appendix A of this Work Plan).

1.5 Facility Description

HAFB is located in south central New Mexico, in the northwest central part of Otero County, approximately 75 miles north-northeast of El Paso, Texas (Figure 1-1). HAFB has a population of 6,000, supports approximately 21,000 active-duty Air Force, National Guard, Air Force Reserve, retirees, civilians, and their family members. HAFB

occupies approximately 60,000 acres in the northeast quarter of Section 1, Township 17 South, Range 8 East. The White Sands Missile Range testing facilities occupy additional land extending northward from the Base. Private and public owned lands border the remainder of HAFB. The major highway servicing HAFB is Highway 70, which runs southwest from the town of Alamogordo and separates HAFB from publicly owned lands to the south. Alamogordo is located approximately 7 miles east of the base and has a population of approximately 35,000.

The SWMU 183 site (see Figure 1-2 and Plates 1 and 2) is unique in that, rather than being a waste management system of limited to moderate size in a singular physical location, it is a subsurface feature comprised of approximately 165,000 linear feet (ft) of sewer line (see Table 2-2, located in Appendix B-1) that serves the entire developed portions of the Base. In addition the HAFB sewer system is divided into 10 sub-basins and includes 715 active and 131 inactive (abandoned and removed) manholes, 24 lift (pumping) stations, and hundreds of variably contributing sources distributed throughout the entire Base. The sources include direct discharges from industrial/operational facilities and domestic structures, as well as pass-through discharges from additional waste management systems such as oil/water separators (OWSs). The sewer collects and transports both sanitary and mixed industrial wastes to the Base's wastewater treatment plant (WWTP), which is located at the central-southern boundary of the Base (see Figure 1-2).

1.6 Facility Operation History

HAFB was first established in 1942 as Alamogordo Army Air Field (AAF). From 1942 through 1945, Alamogordo AAF served as the training ground for over 20 different flight groups, flying primarily B-17s, B-24s, and B-29s. After World War II, most operations had ceased at the Base. In 1947, Air Material Command announced the air field would be its primary site for the testing and development of un-manned aircraft, guided missiles, and other research programs. On January 13, 1948, the Alamogordo installation was renamed Holloman Air Force Base, in honor of the late Col. George V. Holloman, a pioneer in guided missile research. In 1968, the 49th Tactical Fighter Wing arrived at HAFB and has remained since, conducting fighter aircraft training and operations. HAFB has also served as the German Air Force's Tactical Training Center since 1996.

The sewer system was originally installed in 1947 and expanded to its current configuration as the Base was subsequently developed. In 1996, the 1.5 million gallon per day (gpd) WWTP was constructed and remains in service.

1.7 Industrial Activities and Waste Generation

The industrial operations facilities at HAFB historically produced a variety of wastes, many of which were discharged to the sewer system. Current waste discharges are conveyed to the HAFB WWTP. In a prior industrial wastewater pretreatment study (Ecology & Environment, 1998) the industrial wastewater discharges of 55 industrial facilities were assessed to identify what contaminants of potential concern (COPCs) were being introduced into the wastewater system. The study identified a number of COPCs, including:

- Volatile organic compounds (VOCs);
- Semi-volatile organic compounds (SVOCs);
- Petroleum, oil, and lubricants (POLs);
- Oil and grease;
- Heavy metals;
- Herbicides and pesticides;
- Total Suspended Solids (TSS);
- Biological oxygen demand (BOD) and chemical oxygen demand (COD);
- Sulfate and chloride; and
- Possible radionuclides (Carbon-14, tritium, iodine 125, radium 226, and radium 228).

Common waste-generating activities included vehicle, aircraft, equipment, and floor washing; x-ray and photo processing; and fuel canister rinsing. Many of these facilities utilized pretreatment features such as grit chambers, grease traps, holding ponds, and OWSs before wastes were discharged into the sewer system. Table 1-7 in Appendix B-2 of this Work Plan (from Ecology & Environment, 1998) presents a summary of study results, including building name and number, waste flow type, average and maximum daily flow volumes, identified COPCs, and pretreatment systems existing at the time of the study. Plates 1 and 2 show the locations of all of the buildings identified as discharging COPCs into the sewer system, as well as the HAFB-designated Sewer Sub-basins each is located within.

1.8 Nature and Extent of Any Known Contamination

At present, the nature and extent of contamination resulting from any suspected or unknown releases from the sewer system is undefined. As shown on Plates 1 and 2 there are three suspected sewer release areas located in sub-basins 5, 8, and 9. However, based on prior structural evaluations of the sewer, certain lengths of the sewer have been lined to improve the integrity of the sewer system. It is possible that

releases to the environment may have occurred in sewer lines whose material of construction has been compromised.

1.9 Summary of Interim Measures and Past Assessments

A number of past studies and removal actions have been performed in direct relation to SWMU 183 and its tributary systems, including:

- An industrial wastewater pretreatment survey,
- An inflow and infiltration study,
- RCRA Facility Investigation planning,
- An Environmental Assessment (EA) in support of a wastewater utility privatization, and
- OWS removals.

Each of these actions is described below.

1.9.1 Industrial Wastewater Pretreatment Study

An industrial wastewater pretreatment study was conducted on the sewer system in 1997 in support of developing an Industrial Wastewater Pretreatment Management Plan (IWPMP) and Customer Concept Document (CCD) (Ecology & Environment, Inc, 1998). This study represents the most comprehensive understanding of the nature and likely source of various wastes historically discharged to the sewer, and therefore, serves as a substantive guidance for the development of the focus and strategy of this RCRA RFI. The scope of the three-phase study was to:

1. Identify wastewater sources and COPCs from industrial activities at the base;

2. Develop a SAP and associated Health and Safety Plan (HASP) for the purpose of collecting detailed industrial wastewater and treatment works characterization data, develop a Pollution Prevention Technical Report, and develop a Pretreatment Management Technical Report; and

3. Develop a Pre-Concept Analysis and Design, a CCD technical report, and environmental justification for the project.

Fifty-five industrial facilities, comprising approximately 80 buildings, were surveyed. A summary of major project findings for this effort are presented in Section 3 of this Work Plan. As indicated above, Table 1-7 located in Appendix B-2 of this Work Plan (Ecology & Environment, 1998) provides a summary of the actual results from the original basewide industrial wastewater pretreatment study.

1.9.2 Inflow and Infiltration Study

An infiltration and inflow (I/I) study was conducted on the HAFB sewer system in 1998 by Radian International, LLC (Radian International, 1998). Table 2-2 located in Appendix B-1 presents a construction summary of the HAFB sewer system by sub-basin (from Radian International, 1998). The purpose of the study was to determine if the base sanitary sewer system had excessive groundwater infiltration or stormwater inflow that could potentially cause regulatory noncompliance. Three phases of field work were conducted, including: 1) sewage flow, rainfall monitoring, and manhole inspections; 2) smoke testing, and; 3) TV inspection and dyed-water flooding.

The primary findings of the study were that some of the sewer system exhibited structural and hydraulic problems, but that "the most significant system problem appeared to be an excessive amount of steady inflow into the system". The following are summaries of the primary study findings pertinent to the physical condition of the sewer system as potentially relevant to this RCRA RFI:

1.9.2.1 Structural Condition

Although most of the active lines in the sewer system were determined to have been repaired or replaced, there were still a number of lines that were in critical and serious structural condition that needed to be addressed. Some sections of sewer line in the southern portion of the base could have been impacted by hydrogen sulfide generated in the lines and were corroded.

1.9.2.2 Hydraulic Condition

Some of the newer sewer lines were determined to be in good structural condition, but have poor hydraulics. Mismatched inverts, very low slopes, and sagging had all contributed to a buildup of debris in the lines. The majority of lines observed contained debris, some with accumulations of up to 30% of the pipe diameter. Despite this, most of the lines were determined to have sufficient capacity to convey the required flows. A minor number of lines were observed to exceed their capacity as evidenced by in-manhole surcharging (i.e., no surface discharge).

1.9.2.3 Steady Infiltration

Flow monitoring data indicated that approximately 542,000 gpd of steady I/I enters the sewer system. The average base flow measured (sewage generation rates not including I/I) for the facility was approximately 485,000 gpd. These data indicated that I/I volumes exceeded the average base flow, and was also greater than what was generally considered to be excessive. The majority of I/I to the system was determined

to be groundwater capture via service lines and laterals located beneath the water table. This situation is most prevalent in the southeastern area of HAFB where the depth to groundwater is relatively shallow (5 feet or less).

1.9.2.4 Stormwater Inflow and Infiltration

Radian identified approximately 30 sources of possible stormwater inflow during smoke testing conducted in select portions of the system. It was concluded that stormwater inflow at HAFB is not a significant concern due to the small amount of regional rainfall. Only four lines were found to exceed the line capacity following a large rainfall. Various information and data from these previous programs was used to develop the Initial CSM (described in Section 5 of this Work Plan).

1.9.3 RCRA Facility Investigation Planning

A Phase II RFI Work Plan was prepared in response to a U.S. Environmental Protection Agency (USEPA) policy issuance, wherein sewer systems were to be treated and characterized as SWMUs. As stated in the *Federal Register* (p. 30809, U.S. Government Printing Office, 1990), the USEPA defines a SWMU as “any discernible unit at which solid wastes have been placed at any time, irrespective of whether the unit was intended for the management of solid or hazardous waste. Such units include any area at a facility at which solid wastes have been routinely and systematically released”. The RFI was intended to comply with the RCRA corrective action process wherein releases or potential releases from SWMUs were to be identified and, as necessary, characterized and remediated. The Phase II RFI Work Plan was developed in April 1995 (Foster Wheeler Environmental Corp., [FWENC]/Radian Corp., 1995a).

In the work plan, HAFB’s sanitary and industrial sewer lines that drain to the WWTP were referred to as SWMU 183. The storm sewer lines and the new WWTP, which began operation in July 1996, were not considered part of SWMU 183.

The Work Plan identified lines of concern (LOCs) as sewer line segments that met two criteria:

- Physical condition indicating that they may have leaked; and
- Location downgradient from a potential source of hazardous constituents connected directly to the sewer system.

Based on funding appropriation constraints, the Phase II RFI Work Plan was never implemented.

1.9.4 Environmental Assessment for Wastewater Utilities Privatization

In 2005, the Air Force evaluated the concept of selling the entire HAFB wastewater collection and treatment system to a non-Air Force entity. The purpose of the proposed action was to meet Congressional and Office of the Secretary of Defense (OSD) mandates regarding the privatization of non-combat military activities, including utilities.

The system proposed to be sold included all equipment, fixtures, right-of-way, and other improvements utilized in connection with the wastewater treatment system. The real property upon, under, or around the utility system was not to be included in the sale. The acquiring entity would have been required to provide all necessary labor, management, supervision, permits, equipment, supplies, materials, transportation, and any other incidental services for the complete ownership, operation, maintenance, repair, upgrades, and improvements to the wastewater treatment system.

The EA analyzed 10 resource areas for both the proposed action and the no action alternative. The resource areas included: physiography, geology, and topography; soils; water resources; biological resources; air quality; land use; socioeconomic conditions; and cultural resources.

The EA analysis concluded that, as long as the functioning of the HAFB wastewater collection and treatment system remained substantially the same, there would be no significant environmental impacts resulting from the proposed action. However, it was determined that the transfer of ownership of the system to a private or public entity might cause complex regulatory, economic, and/or mission impacts with significant and unacceptable levels of regulatory, economic, and technical risk.

Therefore, the No Action Alternative was recommended, and the wastewater utility system to date remains an Air Force asset.

1.9.5 OWS Removals

A series of investigations and corrective actions to remove OWSs have been conducted at HAFB since the mid-1990s. A chronology of the reports for previous OWS investigations and corrective actions conducted at HAFB is presented below:

- *Draft Final Phase I RCRA Facility Investigation Report, Table 2 Solid Waste Management Units, Holloman Air Force Base, New Mexico.* October 1994, Radian Corporation.

- *Draft Final RFI Report, Table 3 RCRA Facility Investigation, Holloman Air Force Base, New Mexico.* July 1995b, Foster Wheeler Environmental Corporation and Radian Corporation.
- *Closure Report for Remediation of POL – Contaminated Sites and Oil/Water Separator Removals, Holloman Air Force Base, New Mexico. November 1995,* EBASCO Services, Inc., and Groundwater Technology Government Services, Inc.
- *Final Closure Report for Phase II Remediation of POL-Contaminated Sites and Oil/Water Separator and Waste Oil Tank Removals, Holloman Air Force Base, New Mexico*. July 1997, FWENC.
- *Final Closure Report Addendum for Phase II Remediation of POL-Contaminated Sites and Oil/Water Separator and Waste Oil Tank Removals, Holloman Air Force Base, New Mexico*, December 1997, FWENC.

These corrective actions have included removal of OWS units, removal and/or capping of associated piping, removal of contaminated soils, and replacing select OWS systems or connecting building discharges directly to the sewer.

Each of the OWS systems are regulated RCRA SWMUs listed in the HAFB RCRA operating permit. Table 1-1 of this Work Plan lists each of the 41 OWS SWMU sites and their current permitted status as per Tables A and B of the HAFB Hazardous Waste Facility Permit No. NM6572124422 (NMED, 2005).

This page intentionally left blank.

2 ENVIRONMENTAL SETTING

2.1 Physiography and Topography

HAFB is located within the Sacramento Mountains Physiographic Province on the western edge of the Sacramento Mountains. HAFB is approximately 60,000 acres in area, and is located at a mean elevation of 4,093 feet above mean sea level (amsl). The region is characterized by high tablelands with rolling summit plains; cuesta-formed mountains dipping eastward and of west-facing escarpments with the wide bracketed basin forming the basin and range complex. The Base is located in the Tularosa Sub-basin, which is part of the Central Closed Basins. The bordering mountains rise abruptly to altitudes of 7,000 to 12,000 feet amsl. The San Andres Mountains bound the basin to the west (about 30 miles) with the Sacramento Mountains approximately 10 miles to the east. At its widest point, the basin is about 60 miles east to west and stretches approximately 150 miles north to south.

In the vicinity of HAFB, the ground surface is relatively flat and slopes gently to the southwest. There are localized areas of greater topographic relief related to arroyos present on the Base, as described in Section 2.3 of this Work Plan.

2.2 Climate

As a whole, New Mexico has a mild, arid to semi-arid, continental climate characterized by light precipitation totals; abundant sunshine, relatively low humidity and relatively large annual and diurnal temperature range (Western Regional Climate Center [WRCC], 2003). The climate of the Central Closed Basins varies with elevation. The base is found in the low areas and is characterized by warm temperatures and dry air. Daytime temperatures often exceed 100 degrees Fahrenheit (°F) in the summer months and middle 50s in the winter. A preponderance of clear skies and relatively low humidity permits rapid night time cooling resulting in average diurnal temperature ranges of 25 to 35°F. Potential evapotranspiration, at 67 inches per year, significantly exceeds annual precipitation, which is usually less than 10 inches. The very low rainfall amounts resulting in the arid conditions, which with the topographically induced wind patterns combining with the sparse vegetation, tend to cause localized “dust devils”. Much of the precipitation falls during the mid-summer monsoonal period (July and August) as brief, yet frequent, intense thunderstorms culminating in 30 – 40% of the total annual rainfall.

2.3 Surface Water and Hydrology

Because of the high net evaporation of rainfall, there are no natural perennial streams in the immediate area of the sewer lines. Intermittent streams and arroyos in the basin lowlands are important only during the infrequent periods of heavy rainfall. The

Tularosa Basin contains all of the surface flow in its boundaries. The nearest inflow of surface waters to the Base comes from the Lost River, located in the north-central region of the Base. The Lost River Drainage Basin is the main drainage area within the boundaries of Holloman AFB (Figure 2-1). The upper reaches of the Three Rivers and the Sacramento River are perennial in the basin. HAFB is dissected by several southwest trending arroyos that control the surface drainage. Hay Draw arroyo is located in the far north. Malone and Rita's Draw, which drain into the Lost River and Dillard Draw arroyos, are located along the eastern perimeter of the Base (Figure 2-1). Approximately 10,000 years ago, indications are of a much wetter climate. The present day Lake Otero encompassed a much larger area, possibly upwards of several hundred square miles. Its remains are the Alkali Flat and Lake Lucero. Lake Lucero is a temporary feature of merely a few inches in depth during the rainy season.

Potable water is available from municipal wells along the margins of the basin with more saline water towards the center. The principal sources of potable water are located in a long narrow north-south trending area on the upslope sides of Tularosa and Alamogordo and in the far southern part of the basin. HAFB is also supplied potable water from Lake Bonito, which is in the Pecos River Basin.

The hydrology of the southern portion of the Base (south of the wastewater treatment plant) is dominated by several manmade features that form a connected hydrologic system. The principal components of this system are: the stormwater drainage canal, Lagoon G, Lake Holloman, and Lake Stinky. In addition, there are both natural and constructed wetlands in this area, some of which are related to and dependent on the manmade surface water features.

HAFB currently generates under 1 million gallons per day (MGD) of wastewater. This effluent is eventually discharged to the stormwater drainage canal southwest of Lagoon G and north of Highway 70. A berm surrounding this lagoon prevents stormwater from flowing into the lagoon. The stormwater drainage canal starts at a point north of Lagoon G, and then extends southwest of the lagoon into Lake Holloman. The canal is about 2 feet wide and 1 mile long with an elevation change of about 5 feet between Lagoon G and Lake Holloman. The Base storm sewer system drains directly into this canal. The drainage basin for the storm sewer system encompasses about 13 acres. The canal also receives effluent from Lagoon G.

Lake Holloman was created in 1965 to receive excess flow from the previous sewage treatment lagoon system. It was formed by the construction of a non-engineered earthen dam midway along an existing ephemeral lake (playa) that normally received runoff from HAFB. Lake Holloman receives water from the stormwater drainage canal, Lagoon G, and effluent from the WWTP. The amount of effluent going to Lake Holloman can be adjusted depending on the water requirements of Lagoon G and the constructed wetlands. The lake is in a state of dynamic equilibrium, rising and falling

with seasonal and annual variations in runoff, local shallow groundwater, and treated effluent from the WWTP.

Lake Stinky encompasses as much as 35 acres of playa below Lake Holloman. This area represents a remnant of the original playa grassland present in the project area prior to the construction of the lagoon system for the original wastewater treatment system in 1948. Persistent seepage from Lake Holloman is sufficient to maintain a limited surface water expression in Lake Stinky, as well as a substantial growth of wetland vegetation (tamarisk and saltgrass) at the base of the dam separating Lake Stinky and Lake Holloman. During most years, total annual discharge to Lake Holloman is sufficient to result in overflow to Lake Stinky. On these occasions, Lake Stinky extends south from the dam through culverts underneath U.S. Highway 70/82 to encompass as much as 61 acres.

There are approximately 119 acres of jurisdictional wetlands on the main base (United States Air Force, 1996), the majority of which are located south of the WWTP near Lagoon G and Lake Holloman (79 acres). Some of these areas are fed partly by seepage from artificial impoundments (e.g., north end of Lake Stinky; west and south of Lagoon G). Others may have an independent existence, or be only slightly affected by the impoundments. These latter areas seem to be remnants of the wetlands that existed before the construction of the present system. Many of the wetlands located south of the WWTP are important foraging areas for resident and migrating birds and/or bats.

2.4 Regional Geology

The sedimentary rocks which make up the adjacent mountain ranges are between 500 and 250 million years old. During the period when the area was submerged under the shallow intra-continental sea, the layers of limestone, shale, gypsum, and sandstone were deposited. In time, these layers were pushed upward through various tectonic forces forming a large bulge on the surface. Approximately 10 million years ago the center began to subside resulting in a vertical drop of thousands of feet leaving the edges still standing (the present day Sacramento and San Andreas mountain ranges). In the millions of years following, rainfall, snowmelt, and wind eroded the mountain sediments depositing them in the valley (i.e. Tularosa Basin). Water carrying eroded gypsum, limestone, dolomite, gravel, and other alluvial matter continues to flow into the basin with no route of exit.

The Tularosa sub-basin is geologically described as a bolson, which is an extensive flat alluvium-floored depression, into which drainage from the surrounding mountains flows toward a central playa. The overlying alluvium generally consists of unconsolidated gravels (limestone, dolomite, and gypsum), sands, and clays. A fining sequence from the San Andreas and Sacramento Ranges towards the basin's center characterizes the

area with the near surface soils as alluvial, eolian, and lacustrine deposits. The alluvial fan deposits are laterally discontinuous units of interbedded sand, silt, and clay while the eolian deposits consist primarily of gypsum sands. The eolian and alluvial deposits are usually indistinguishable due to the reworking of the alluvial sediment by eolian processes. The playa, or lacustrine deposits, consist of silty clay containing gypsum and are contiguous with the alluvial fan and eolian deposits.

Mesozoic rocks in the northwest mark the Colorado Plateau, topped by younger Tertiary strata. Quaternary age sediments have washed off the Southern Rockies into the open basins and the Rio Grande Rift, a failed spreading center or aulacogen. This would-be ocean basin runs up the center of the state with the Rio Grande flowing down its middle, exposing the Paleozoic and Precambrian rocks on its uplifted flanks. Later Cenozoic volcanic intrusions of Quaternary and Tertiary age are also associated with the rifting.

The great Permian Basin of Texas continues into the state from the southeast with younger Quaternary-Tertiary sediments of the Great Plains cover the whole eastern edge. Basin-and-range terrain of Tertiary sediments and volcanics appear in the extreme southwest coupled with wide dry basins choked with Quaternary coarse sediments eroded from the blocks of uplifted older rocks.

2.5 Regional Hydrogeology

The majority (over 70 %) of the Environmental Restoration Program (ERP) Sites, SWMUs, and Areas of Concern (AOC) located across HAFB have groundwater monitoring wells containing water with an average total dissolved solids (TDS) concentration greater than 10,000 milligrams per liter (mg/L). This TDS data supports the hypothesis that TDS concentrations below 10,000 mg/L at HAFB are caused by dilution of natural groundwater from leaking water lines and surface irrigation from the domestic water supply. TDS concentrations greater than 10,000 mg/L exceed the New Mexico Water Quality Control Commission (WQCC) limit as potable water (New Mexico Administrative Code [NMAC] 20.6.2) and thus, the groundwater beneath HAFB has been designated as unfit for human consumption. Likewise, USEPA guidelines (USEPA, 1986) have identified the groundwater as a Class IIIB water source, characterized by TDS concentrations exceeding 10,000 mg/L (therefore, the naturally occurring groundwater at HAFB is not regulated). Figure 2-2 shows the general groundwater flow direction at the Base. Groundwater quality in the Tularosa Basin is of potable quality at the recharge areas in close proximity to the Sacramento Mountains and becomes increasingly mineralized (i.e. elevated TDS) toward the central portion of the basin and discharge areas (Radian, 1993).

The preponderance of the groundwater occurs as an unconfined aquifer in the unconsolidated deposits of the central basin, with the primary source of recharge as rainfall percolation and minor amounts of stream run-off along the western edge of the

Sacramento Mountains. Surface water/rainfall migrates downward into the alluvial sediments at the edge of the shallow aquifer near the ranges, and flows downgradient through progressively finer-grained sediments towards the central basin. Because the Tularosa Basin is a closed system, water that enters the area only leaves either through evaporation or percolation. This elevated amount of percolation results in a fairly high water table. Beneath HAFB, the water table ranges from 5 to 50 ft below ground surface (bgs). Flow for the Base is generally towards the southwest with localized influences from the variations in the topography of the Base. The ground surface slopes at a slightly higher rate than the water table such that the depth to groundwater in the northern areas of the Base is comparably greater (25 to 40 feet bgs) than in the southern areas of the Base (less than 10 feet bgs). Near the arroyos, groundwater flows directly toward the surface drainage feature.

In addition, there are no potable water wells on HAFB. Potable water for the Base (Boles, Douglas and San Andreas well fields) and the city of Alamogordo is derived from the foot of the nearby Sacramento Mountains, just south of Alamogordo. According to the groundwater well inventory (presented in Table 2-1) prepared by the New Mexico Office of the State Engineer, there are approximately 25 domestic, 15 commercial, 7 irrigation, and 3 livestock wells located within a 4-mile radius of HAFB (New Mexico Water Rights Reporting System [NMWRRS] database, 2009). As shown on Figure 2-3, these wells are located along HAFB's northern and eastern boundaries (upgradient and cross gradient respectively).

2.6 Soils

Two soil types have been identified on the installation. The main soil type is the Holloman-Gypsum land-Yesum complex, 0 to 5 percent slopes. The other soil type is Mead silty clay loam, 0 to 1 percent slopes. This soil type is located only across the main drainage area (Lost River Drainage Basin) for the installation. The distribution of soil types in the vicinity of HAFB is depicted on Figure 2-4 (United States Department of Agriculture [USDA], 1981).

The Holloman-Gypsum land-Yesum complex, 0 to 5 percent slopes soil consists of large areas of shallow and deep, well drained soils and areas of exposed gypsum. The Holloman soil makes up about 35 percent of the complex. Typically, the surface layer is light brown very fine sandy loam about 3 inches thick. The upper 13 inches of the substratum is pink very fine sandy loam that is very high in gypsum. Below that, the substratum is white gypsum to a depth of more than 60 inches. This soil is calcareous and mildly alkaline to moderately alkaline throughout. Permeability is moderate, and available water capacity is very low.

Gypsum land makes up about 30 percent of the Holloman-Gypsum land-Yesum complex, 0 to 5 percent slopes. Typically, less than 1 inch of very fine sandy loam

overlies soft to hard, white gypsum. The deep Yesum very fine sandy loam makes up about 20 percent of the complex. Typically, the surface layer is light brown very fine sandy loam about 3 inches thick. The upper 9 inches of the substratum is light brown fine sandy loam that is very high in gypsum. Below that, the substratum is pink very fine sandy loam to a depth of more than 60 inches. The soil is calcareous throughout and is mildly alkaline. Permeability is moderate, and available water capacity is moderate. Many fine gypsum crystals are found throughout the profile.

The soil type located across the main drainage area for the installation is Mead silty clay loam, 0 to 1 percent slopes. This deep, poorly drained, nearly level soil is on outer fringes of alluvial fans. This soil formed in fine textured alluvium over lacustrine lake sediment. It is very high in salt content because of periodic flooding and poor drainage. Slopes are smooth and concave. Typically, the surface layer is reddish brown silty clay loam and clay loam about 5 inches thick. The substratum, to a depth of 48 inches, is light reddish brown clay that has a high content of salts. Below that, the substratum is lacustrine material of variable texture and color to a depth of more than 60 inches. Included with this soil are areas of Holloman soils and Gypsum land along the margins of the unit of steep, short gully sides and knolls. These inclusions make up about 15 percent of the map unit for this soil type. Individual areas are generally smaller than 10 acres. This soil is moderately calcareous throughout and is moderately to strongly alkaline. It has a layer of salt that is more soluble than gypsum. Permeability is very slow, and available water capacity is low.

2.7 Site-Specific Setting

As the sewer line traverses the majority of the Base, the site-specific geologic and hydrogeologic setting varies somewhat depending on the location of interest anywhere along its length.

Based on previous investigations conducted at HAFB, site-specific geology may range as follows:

- Five to six feet of brown or tan silty clays overlying a pink to tan gypsum clayey sand.
- A near surface dry silty sand overlying alternating beds of clayey silts (mottled with laterally discontinuous, dry, and very dense gypsum lenses and microcrystalline gypsum crystals) and thin silty sands down to 22 to 27 feet bgs where the capillary fringe is encountered. The clayey silt then continues to a dense silty sand layer at approximately 32 to 35 feet bgs.
- Seven to ten feet of low plasticity silt and silty sand overlying 5 to 15 feet of interbedded highly plastic silt and silty clays, overlying 7 to 15 feet of well sorted,

fine grained sand with intermittent gypsum and clay layers. A dense basal silty clay is inconsistently present at approximately 40 to 45 feet bgs.

- Near surface deposits of low to medium plastic silt varying in thickness from 2 to 15 feet thick overlying a well sorted, very fine to fine grained sand interspersed with small clay, silty clay, and caliche lenses with gypsum crystals.

- Silty sands interbedded with clayey sands overlying a dense caliche layer overlying white fine grained sand layers at approximately 20 feet bgs which grades into a clayey silt interbedded with gypsum lenses and extends 20 to 25 feet to a water bearing silty sand at approximately 40 to 45 feet bgs.

Similarly, site-specific hydrogeology may range as follows:

- Groundwater occurring in a shallow unconfined aquifer at approximately 5 feet bgs in silty sand with potentiometric surface elevations ranging from 4,073.44 to 4,071.5 feet amsl and having a hydraulic gradient of approximately 8.5×10^{-3};

- Groundwater occurring in an unconfined aquifer at approximately 22 to 27 feet bgs with a potentiometric surface elevation of approximately 4,082.74 feet amsl and having a hydraulic gradient of approximately 1.8×10^{-3};

- Groundwater occurring in an unconfined aquifer at approximately 30 to 35 feet bgs in sand and basal clay units with potentiometric surface elevations ranging from 4,047.31 to 4,054.35 feet amsl and having a hydraulic gradient ranging from 4.0×10^{-3} to 8.9×10^{-3}; or

- Groundwater occurring in a shallow unconfined aquifer beneath the site approximately 20 feet bgs in the fine grained sand deposits with potentiometric surface elevations ranging from 4,036.38 to 4,035.32 feet amsl and having a hydraulic gradient of approximately 8.7×10^{-3}.

This page intentionally left blank.

3 SOURCE CHARACTERIZATION

3.1 The HAFB Sanitary Sewer System and Wastewater Treatment Plant

The HAFB sewer system was constructed in 1947 and serves both residential and industrial facilities. The system consists of approximately 165,000 linear feet of sewer lines that, on average, are located approximately 6 feet bgs. Based on groundwater and sewer invert elevations, the SWMU 183 sewer line is expected to be below the water table in the southern portion of the Base. While the HAFB systems also include stormwater lines and a WWTP located at the central-southern boundary of HAFB, SWMU 183 consists only of the sewer lines. SWMU 183 is a unique solid waste management unit because it is large, laterally extensive, and receives wastes from numerous sources.

Wastewater collection and treatment for HAFB is provided for most of the base facilities. The sewer collection system contains a series of gravity collection mains, lift stations, and force mains which route the wastewater to WWTP. Septic systems serve the remaining base population. It is estimated that approximately 30 septic tanks remain in remote areas of the base.

Prior to the construction of the current WWTP in 1996, waste flowed into a collection box and was ground and screened before being pumped into treatment lagoons. The waste now enters the WWTP, which carries out screening, grit removal, flow measurement, aeration, secondary clarification, chlorine contact for effluent disinfection, dechlorination (through the use of sulfur dioxide [SO_2]), and effluent flow measurement. Solids handling facilities include aerobic sludge digesters and paved sludge drying beds. A septage disposal basin for the acceptance of waste from pumped septic tanks and/or portable toilets on the installation is also located at the WWTP. The wastewater treatment facility was designed for an average flow of 1.5 MGD. Treated effluent is discharged into Lake Holloman or nearby constructed wetlands.

3.2 Physical Condition of the Sewer System

Some sections of the SWMU 183 sewer lines remain from the original construction, but the majority of the sections have been lined, replaced, or abandoned within the past 20 years. The newer sewer lines consist of polyvinyl chloride (PVC) pipes, while the older sections consist of clay, concrete, or asbestos cement pipe. In addition to the replaced sections, still other sections have been added or modified in response to changes in the base population or use.

The type and status of the sewer lines is shown on Plates 1 and 2. Table 3-1 lists the pre-designated sampling locations planned for the project and indicates the historical condition of the sewer line and the sampling rationale for each location.

3.3 Waste Characteristics

The HAFB sanitary sewer system and WWTP receive and treat domestic and industrial waste streams being discharged to the system. The sewer system has historically received a variety of chemical compounds from a diverse number of industrial and operational activities.

Table 3-2 provides a list of the chemicals known and or suspected to have been discharged to the sewer system based on the previous industrial pretreatment study (Ecology & Environment, 1998).

Table 3-3 provides a list of the types of wastewater generating processes known to have discharged COPCs into the sewer system (Ecology & Environment, 1998).

Table 1-7 in Appendix B-2 of this Work Plan is the actual summary of results list from the industrial pretreatment study (Ecology & Environment, 1998). It lists the number and name of the 55 specific industrial buildings known to have discharged COPCs, their waste generation activities/processes, their average and maximum daily flow contributions (in gpd), the specific COPCs associated with each building, as well as the then existing pretreatment practices in use at each site. Each of the 55 buildings is also shown on Plates 1 and 2.

Some pretreatment practices are in place to minimize the hazardous waste entering the sewer system. These include OWSs, aqueous film-forming foam (AFFF) ponds, grit and sediment traps, and screens.

3.4 Sewer System RFI Sampling Strategy

Based on the COPCs listed in Table 3-2, and the information available, a comprehensive sampling strategy has been developed for the HAFB Sewer System. The primary sampling strategy for the SWMU 183 RFI is to fully characterize the soil throughout the entire sewer system for potential releases based on the following sampling location criteria:

- Major sewer pipe junctions
- Downgradient from suspected releases
- Downgradient from SWMUs with suspected or known releases
- Locations where two sewer lines with different diameters and/or construction material connect

In order to maximize the detection of COPCs, soil samples will be collected immediately below the sewer line invert at 52 locations that incorporate the listed concerns and provide spatial distribution throughout the entire HAFB sewer system from within each of the 10 sub-basins (Plates 1 and 2). The depth of the sewer line invert will be determined by opening the nearest manhole and measuring the depth to the bottom of the sewer line. All soil samples will be analyzed by a National Environmental Laboratory Accreditation Program (NELAP) certified offsite laboratory for the following analyses:

- VOCs
- SVOCs
- Total Petroleum Hydrocarbons (TPH)
- Target Analyte List (TAL) Metals
- Polychlorinated Biphenyls (PCBs)
- Nitrate (NO_3)
- Sulfate
- Chloride
- Moisture Content

Furthermore, sub-basins 4, 8, and 9 have unique COPCs that will require additional sampling parameters. In addition to the analyses listed above the following analyses will be included for sub-basins 4, 8 and 9:

- Pesticides and Herbicides (Sub-basin 4 only)
- Radionuclides (Carbon-14, Tritium, Radium 226 and 228) (Sub-basins 8 and 9 only)
- Perchlorate (Sub-basin 8 only)

In the event a COPC is detected above an Applicable or Relevant and Appropriate Requirement (ARAR) for soil (described in Section 6.2.1 of this Work Plan), a permanent monitoring well will be installed at that specific location. After the monitoring well is developed, a groundwater sample will be collected and analyzed for the applicable sub-basin specific parameters and TDS as listed above. A complete description of the sampling strategy and analyses for the SWMU 183 RFI is described in the SAP (in Section 6 of this Work Plan).

One significant compound, nitrate (NO_3), was not considered in the prior pretreatment study, but is expected to be present where releases have occurred, and therefore is uniquely relevant to this RFI. Nitrate is known to be generated by the nitrification of the ammonium and is present in domestic wastewaters in relatively large quantities. Denitrification will not occur in aerobic conditions, so nitrate is expected to persist in the shallow subsurface environment. Other sources of nitrate in the subsurface include fertilizers and animal wastes. Neither of these are present in significant quantities over most of the Base area. Therefore, nitrate is considered a unique and useful indicator for identifying whether a release from the sewer has occurred.

This page intentionally left blank.

4 POTENTIAL RECEPTORS

This section identifies and describes potential receptors and environmental systems that are susceptible to contaminant exposure associated with the potential releases of hazardous materials from SWMU 183. The potential receptors include HAFB personnel and residents as well as the flora and fauna of the surrounding ecosystem.

4.1 Current Local Uses and Planned Future Uses of Groundwater

There are no potable water wells on HAFB. Potable water for the Base and the City of Alamogordo is derived from the nearby Sacramento Mountains. According to the groundwater well inventory (Table 2-1 and Figure 2-3) prepared by the New Mexico Office of the State Engineer, there are approximately 25 domestic, 15 commercial, 7 irrigation, and 3 livestock wells located within a 4-mile radius of HAFB (NMWRRS database, 2009).

There are no water supply wells on the Base because the preponderance of groundwater beneath HAFB contains water with an average TDS concentration greater than 10,000 mg/L which exceeds the New Mexico WQCC limit (NMAC, 20.6.2) as potable water and thus, the groundwater beneath HAFB has been designated as unfit for human consumption. Likewise, USEPA guidelines (USEPA, 1986) have identified the groundwater as a Class IIIB water source, characterized by TDS concentrations exceeding 10,000 mg/L.

4.2 Current Local Uses and Planned Future Uses of Surface Waters Directly Impacted by the Facility

Due to low rainfall and high evaporation, surface water at HAFB is limited and, therefore, is not used for domestic or municipal purposes nor is it used for recreation or agriculture. The ponds in the southern part of the Base receive effluent from the National Pollutant Discharge Elimination System (NPDES)-permitted WWTP and are saline (normally about half the salinity of seawater), sulfate-rich, and very rich in nutrients. These ponds provide habitat for numerous plant and wildlife species, so water quality of these receiving waters is important.

4.3 Potential Human Receptors

Potential human receptors include residents, military and civilian workers, construction and maintenance workers, vendors and service providers, and transient visitors. Human use facilities primarily consist of residential housing and industrial/operational

facilities. The Base also has a hospital and three schools and a variety of other public service facilities.

As sewer lines are on average 6 feet below ground surface, the typical HAFB resident; non-invasive worker, vendor, or service provider; or visitor would not likely be adversely affected by a potential subsurface leak from the sewer system. While groundwater is not locally extracted for use, human exposure to pollutants may result to construction workers from dermal contact, outdoor inhalation, or ingestion from physical contact with contaminated soils, and potentially through inhalation of VOCs in indoor air resulting from vapor intrusion.

4.4 Potential Biological Receptors

Potential receptors include the flora and fauna of the surrounding ecosystem, as described in the following subsections. This information was generated in 2005 by Bhate during development of the EA (Bhate, 2006) for the wastewater utility privatization evaluation.

4.4.1 Flora

HAFB flora is dominated by xerophytic shrubland and grassland communities having plant assemblages biogeographically related to the Great Basin and Chihuahuan Desert. Other plant communities on the installation include those that are located in brackish marshes and riparian and/or wetland areas, such as those south of the WWTP. Field investigations and vegetation surveys have identified the plant species that are listed in Table 4-1 of this Work Plan.

4.4.2 Fauna

A wide variety of fauna can be found at HAFB as it provides a relatively diverse range of habitats for both aquatic and terrestrial species. Habitats found on the installation provide ideal environments for a variety of reptiles and amphibians, mammals, and birds. Available habitats include upland grasslands, xerophytic shrublands, brackish marshlands, playas, and surface water habitats. Additionally, the area south of the WWTP also offers a relatively extensive amount of shoreline/edge habitat along Lakes Holloman and Stinky, the stormwater drainage canal, Lagoon G, and associated constructed wetlands.

Previously performed wildlife inventories have identified numerous species of wildlife throughout the installation. Major groups of fauna are discussed below.

4.4.2.1 Invertebrates

Though invertebrates are an important feature of the desert ecosystem, little is known about their diversity in arid lands. Invertebrates play important roles as beneficial pollinators, parasites, predators, detritivores, and as prey for small mammals, reptiles, fish, and birds. To date, there have been no base-wide studies at HAFB to determine invertebrate species diversity.

However, studies on reptiles, birds, and mosquitofish (*Gambusia affinis*) habitat suggest that the roles taken by invertebrates contribute to ecosystem function. For example, it has been found that the animals on the installation consume insects such as grasshoppers (*Orthoptera*), butterflies and moths (*Lepidoptera*), beetles (*Coleoptera and Bledius*), adult chironomids (*Diptera*), and corixids (aquatic *Hemiptera*).

A total of 26 different aquatic invertebrate taxa have been identified in the area south of the WWTP (Freehling, et al., 1999) and certain fish populations located in Lost River and Malone Draw feed on mosquitoes, amphipods, and annelid worms (Suminski, 1977; Turner, 1987). Some of the invertebrate species that have been identified on the installation include harvester ants (*Pogonomyrmex* spp.), honeypot ants (*Myrmecocystus*), and grasshoppers (*Orthoptera*).

4.4.2.2 Reptiles and Amphibians

Two herpetofauna species surveys have been performed at HAFB: (1) along roads for the Texas horned lizard (*Phrynosoma cornutum*) (Mehlhop, et al., 1998), and (2) at the cinetheodolite missile towers (Johnson, et al., 1997a). The Texas horned lizard survey was conducted on the Main Base and the Boles Wells Water System Annex. The Texas horned lizard, formerly a Category 2 species for federal listing as endangered or threatened, was reclassified February 28, 1996, as a species of concern (United States Department of Interior, 1996). This lizard appears to be abundant on HAFB (Mehlhop, et al., 1998) and was found within the major plant community types on both the Main Base and Boles Wells Water System Annex. Other reptiles found during these surveys are listed in Table 4-2 of this Work Plan.

Other reptiles and/or amphibians that may occur at HAFB that are not listed above include rat snakes (*Elaphe* spp.), rattlesnakes (*C. molossus*), and the greater earless lizard (*Cophosaurus texanus*).

4.4.2.3 Mammals

The most common mammals at HAFB consist of various rodent species and the black-tailed jackrabbit (*Lepus californicus*), found throughout the Great Basin Desert Shrub habitats in New Mexico (Frey and Yates, 1996). Numerous small colonies of bats that forage for insects at the numerous playas, wetlands, and riparian habitats (Johnson et al., 1997a) can be found on the installation. Bats on HAFB roost in abandoned and

inhabited buildings and culverts. Table 4-3 of this Work Plan lists some of the bat species that have been observed at HAFB.

Fourteen species of rodents have been identified on the dune periphery of the installation. These species are listed in Table 4-4 of this Work Plan.

The Ord's Kangaroo Rat (*Dipodomys ordii*), Desert Pocket Mouse (*Chaetodipus penicillatus*), and the Plains Pocket Mouse with the lighter pelage (*Perognathus flavescens gypsi*) were found primarily within the dunes; others were found equally distributed or too few were captured to determine the habitat affinity (Root and Demarais, 1997; Johnson et al., 1997a; Johnson, et al., 1997b).

At least five mammalian species that have been or could be observed on HAFB have been introduced by man. These five species include the house mouse (*Mus musculus*), Norway rat (*Rattus norvegicus*), horse (*Equus caballus*), barbary sheep (*Ammotragus lervia*), and gemsbok (*Oryx gazella*). The latter two species were introduced by the New Mexico Department of Game and Fish (NMDGF) in the late 1960s. Native big game mammals are uncommon in the project area and include mule deer (*Odocoileus hemionus*) and pronghorn (*Antilocapra americana*). Predators include bobcat (*Lynx rufus*), gray fox (*Urocyon cinereoargenteus*), and coyote (*Canis latrans*). Badger (*Taxidea taxus*) and striped skunk (*Mephitis mephitis*) are uncommon predators and omnivores, respectively.

4.4.2.4 Birds

The complex of constructed wetlands south of the WWTP provides important habitat for a number of bird species. Bird censuses are ongoing at HAFB and a complete list of birds can be found in the HAFB Integrated Natural Resource Management Plan (INRMP) (HAFB, 2001). The HAFB INRMP further details the relationship between habitat at HAFB and the bird species found there. Table 4-5 lists some of the previously observed bird species at HAFB.

4.5 Endangered or Threatened Species

The following summarizes the status of endangered and threatened species in the HAFB area.

4.5.1 Endangered Species

Although not noted as being observed at HAFB, the Aplomado falcon (*Falco femoralis)* is known to be present in the HAFB area. The Aplomado falcon ranges from northern Mexico (and very rarely into southern Texas and New Mexico) southward to the southern tip of South America. In this huge range the species may be common or very

rare depending upon habitat and location. This species sometimes hunts over grassland fires and feeds on small birds and/or insects fleeing the flames.

While still legally protected from hunting, the Aplomado falcon is not protected by Endangered Species Act requirements to preserve habitat and the like. It is believed that mainly habitat destruction caused the species' (near-)disappearance from the U.S. and hinders reestablishment of a wild breeding population; thus, a coalition of environmental groups is attempting to have full protection restored so as not to jeopardize the success of the expanding wild population and the reintroduction efforts (Associated Press, 2006).

4.5.2 Threatened Species

4.5.2.1 Burrowing Owl

The burrowing owl (*Athene cunicularia*; formerly *Speotyto cunicularia)* is known to be present in the HAFB area. The burrowing owl is a grassland bird historically found in vast numbers across the prairies of the western Great Plains. While the formal environmental status of the burrowing owl varies based on geography, there is an overall decline of this species, particularly where burrowing owls are strongly associated with prairie dog towns. They are listed as endangered, threatened, or a Federal species of special concern in most states and provinces where they occur. The primary threats across its North American range are habitat loss and fragmentation due to the incursion of agriculture and urban encroachment, suppression of naturally occurring fire, and habitat degradation from the extermination of small mammals like prairie dogs and squirrels. Increases in predators such as foxes, badgers, and coyotes are also taking a toll (The Nature Conservancy, 2007; The Owl Pages, 2005).

4.5.2.2 White Sands Pupfish

The White Sands Pupfish (*Cyprinodon tularosa*) is endemic to the Tularosa Basin of New Mexico and is considered a Species of Concern by the U.S. Fish and Wildlife Service (USFWS) and a Threatened Species by the NMDGF (NMAC 19.33.6). Currently White Sands Pupfish populations occur in four detached habitats within the Tularosa Basin, one of which is the Lost River Basin on HAFB. Although not native to the Lost River Basin (population transplanted there in 1970), the White Sands Pupfish essential habitat is protected within the Basin due to the species' extremely limited remaining distribution. Threats to the White Sands Pupfish include introduction of nonnative fishes, dewatering, chemical contamination of aquatic habitats, and habitat degradation caused by feral horses and off-road vehicle use (Pittenger and Springer, 1999).

This page intentionally left blank.

5 INITIAL CONCEPTUAL SITE MODEL

5.1 Initial CSM Development

The previous sections have presented a summary of the previous assessments conducted on the HAFB sewer system (SWMU 183), the environmental setting, COPCs, and potential receptors. A conceptual site model provides a convenient format to compile all the relevant data and provides an overall understanding of the site. This section presents the initial CSM which will evolve as data is generated to characterize the soil and groundwater (if required) quality throughout the HAFB sewer system. The CSM provides a framework for the entire project, and, in particular, can help identify specific data needs. It is an important communication tool for regulators, responsible parties, and stakeholders. The Initial CSM development efforts were used to create the following summary description, as well as Figure 5-1, a detailed 3-dimensional representation of the Initial CSM.

5.2 Initial CSM Summary Description

SWMU 183 is a subsurface sewer system that serves the developed portions of the approximately 60,000-acre property comprising HAFB. The system is comprised of:

- Approximately 165,000 linear feet of sewer line constructed of various materials,
- 715 active and 131 inactive (abandoned/removed) manholes,
- 24 lift (pumping) stations and force mains,
- 17 wash racks,
- 19 active and 22 inactive oil/water separators,
- WWTP, and
- Hundreds of variably contributing sources distributed throughout the entire Base, including discharges from 55 operational facilities as well as domestic structures.

Although the WWTP is part of the sewer system, it is regulated under a separate NPDES permit, and therefore, is not part of SWMU 183. The WWTP was designed for flows of 1.5 MGD and has experienced actual flows of approximately 1.0 MGD. The operations-related contribution to the sewer is estimated at 58,000 gpd or 6% of the total flow. Flows attributable to the permanent and commuter populations (sanitary waste) is estimated at 427,000 gpd or 42% of the total. Steady infiltration and inflow is estimated at 542,000 gpd or 52% of the total (Radian International, 1998).

5.3 Summary of Previous Data

Previous assessment activities which have been conducted in direct relation to SWMU 183 and its tributary systems were described in Section 1.9 of this Work Plan. Currently, soil and groundwater analytical data along the sewer system only exists for

areas where the sewer system transits other SWMUs, AOCs, or ERP sites. Analytical data which has been collected along the sewer system in close proximity to these SWMUs, AOCs, and ERP sites cannot be directly attributed to a release from the sewer system, as these sites are areas of suspected or known releases of their own, not related to the sewer system.

5.4 Suspected Sewer Release Locations

There are currently three areas within the HAFB sewer system where suspected releases are thought to have occurred due to reported breaks in the sewer line (shown on Plates 1 and 2).

The current and former Primate Research Institutes are located in Sub-basins 8 and 9 of the HAFB sewer system respectively. Two sewer line collapses have been reported, downgradient of the facilities, along the main north-south trending sewer lines conveying effluent from both facilities. These sewer line collapse areas are presented on Plate 1 as Suspected Sewage Release Areas #1 and #2. COPCs which have historically been used at the current and former Primate Research Institutes include carbon-14, iodine-125, radium 226 and 228, tritium tracers, and solvents. These COPCs may have entered the sewer system at either or both facilities in the past (over 30 years ago), and subsequently been released into the subsurface at the collapsed sections.

Additionally, a third sewer line break reportedly occurred within the central portion of Sub-basin 5 of the HAFB sewer system. This potential release location is labeled the Suspected Sewer/Natural Gas Release Area on Plate 2. It is unknown what specific COPCs may have been discharged from this reported break.

5.5 HAFB Setting

The Tularosa sub-basin is geologically described as a bolson (an extensive, flat, alluvium-floored depression) into which drainage from the surrounding mountains flows toward a central playa. Water carrying eroded gypsum, limestone, dolomite, gravel, and other alluvial matter continues to flow into the basin with no route of exit.

Unconsolidated deposits in the basin include alluvium generally consisting of gravels (limestone, dolomite, and gypsum), sands, and clays. At the base, the area is characterized by near-surface soils of alluvial, eolian, and lacustrine origin. The alluvial fan deposits are laterally discontinuous units of interbedded sand, silt, and clay while the eolian deposits consist primarily of gypsum sands. The eolian and alluvial deposits are usually indistinguishable due to the reworking of the alluvial sediment by eolian processes. The playa, or lacustrine deposits, consist of silty clay containing gypsum and are contiguous with the alluvial fan and eolian deposits.

Potential evapotranspiration, at 67 inches per year, significantly exceeds annual precipitation, which is usually less than 10 inches per year. Much of the precipitation falls during the mid-summer monsoonal period (July and August) as brief, yet frequent, intense thunderstorms accounting for 30 to 40% of the total annual rainfall.

The result is that the surficial deposits are a hydrogeologic feature characterized by relatively low hydraulic conductivities (e.g., less than 10^{-4} centimeters per second [cm/sec]) in which the groundwater is non-potable due to high concentrations of TDS. The low recharge, low permeability (and hence yield), and high TDS combine to negate the utility of the groundwater for potable or other purposes.

Potable water at HAFB is supplied by municipal wells along the margins of the basin where the water has lower TDS and the permeability is higher. These locations are hydraulically upgradient of the Base. The more saline waters (high TDS) at the Base result from long travel paths or residence times of the water in contact with the gypsum and other soluble geological materials. Small zones of fresh water (with lower TDS) may occur in areas where leakage from water supply lines and the sewer line occur. Potable water is also provided by Bonita Lake, which is located approximately 60 miles northeast of the Base.

5.6 SWMU 183 Soil and Groundwater Conditions

As the sewer system traverses the majority of HAFB, the site-specific geologic and hydrogeologic setting varies along its course. Site-specific discussion of soil and groundwater conditions present throughout the entire length of SWMU 183 are presented in Section 2.7 of this Work Plan. Subsurface soil conditions along the sewer system generally consist of well sorted sands interbedded with silty sands and clays, with the occasional presence of caliche lenses. Depth to groundwater along the sewer system can be as great as 30 to 40 ft bgs in the northern areas of HAFB, and less than 5 ft bgs in the Main Base area. Groundwater flow direction for the Base is generally towards the southwest with localized influences from the variations in the topography of the Base. Near the arroyos, groundwater flows directly toward the surface drainage feature.

5.7 Contaminants of Potential Concern

Common industrial/commercial activities (generating 6% of the total flows) which generate wastes discharged to the sewer system include:

- Vehicle, aircraft, equipment, and floor washing;
- Vehicle, aircraft, and equipment maintenance,
- X-ray and photo processing, and
- Fuel canister rinsing.

Many of the facilities generating the waste utilized pretreatment features such as grit chambers, grease traps, holding ponds, and OWSs before wastes were discharged into the sewer system. Classes of COPCs discharged to the sewer system include:

- VOCs
- SVOCs
- POLs
- Oil and grease
- Metals
- Herbicides and pesticides (Sub-basin 4 only)
- Nitrate, sulfate, and chloride
- Radionuclides (Sub-basins 8 and 9 only)
- Perchlorate (Sub-basin 8 only)

Building 374, located in HAFB sewer system Sub-basin 4 (Plate 2) was historically utilized as a pesticide and herbicide storage area. Past use of radionuclides (as tracers) has been documented at both the former and current Primate Research Institutes, located in HAFB sewer system Sub-basins 8 and 9 respectively (Plate 1). Historical use of perchlorate has been documented at the Early Missile Test Site, Test Sled Maintenance Area, and the Test Sled Track located in the northern portion of HAFB within Sub-basin 8 (Plate 1). As these COPCs are sub-basin specific (not basewide COPCs) the soil and groundwater samples collected from these sub-basins will be tailored to include these additional analyses for their sub-basin specific suite of analyses (see Section 6.3 of this Work Plan for sub-basin specific sampling details).

5.7.1 Release Mechanisms

The contaminants listed above could be released from the sewer system through any of the following scenarios where the sewer line is above the elevation of the water table:

- Broken/cracked pipes in services, laterals, and/or mains;
- Corroded pipes in services, laterals, and/or mains;
- Defective joints in services, laterals, and/or mains;
- Defective connections in services, laterals, and/or mains;
- Defective OWS connections; and/or
- Defective manhole casings.

Where the sewer line is below the elevation of the water table, the gradient is inward from the aquifer to the sewer line and the contents of the sewer are not released to the environment. This condition results in the high degree of infiltration which characterizes the overall system in which 54% of the total flow results from infiltration. The infiltration occurs primarily in the southern part of the Base, particularly in the vicinity of the golf course and the Military Family Housing (MFH) area (Sub-basins 1, 2, 4, 5, and 6 [see Plate 2]). The depth to the water table is as little as 3 feet bgs in this area. In the

northern portions of the base, the depth to the water table may be as great as 30 to 40 feet bgs.

Where the sewer line and associated features are located above the water table, liquids in the line may have leaked, or be currently leaking, out into soils and/or groundwater. These may be episodic events such as manholes being surcharged during storm events or pumping station failures; or they may be continual releases such as those occurring from cracked pipes. To the extent that the liquid in the sewer line contains COPCs, they will be released into the unsaturated zone soils at and below the elevation of the leak.

Any releases from the sewer system occur in the context of their location in the Tularosa Basin, which is geologically described as a bolson (an extensive, flat, alluvium-floored depression) into which drainage from the surrounding mountains flows toward a central playa. Water carrying eroded gypsum, limestone, dolomite, gravel, and other alluvial matter continues to flow into the basin with no route of exit.

5.7.2 Contaminant Fate and Transport

The nature of the subsequent transport and fate of COPCs is dependent on environmental conditions and the nature of the COPC. The most significant COPCs in terms of likely mass are VOCs, SVOCs, and inorganic compounds such as nitrate. VOCs are likely to be the most mobile COPCs and may travel further than other classes of COPCs. Metals, SVOCs, POLs, and oil and grease have a low degree of mobility in the subsurface. The presence of these classes of COPCs is likely to be limited to the soils in the vicinity of the leak.

The leaked liquids and the COPCs may reach groundwater, dependent on the size and duration of the release and the depth to groundwater. Once in groundwater the COPCs will travel in the direction of groundwater flow by advection and dispersion. The resultant plumes may be spread laterally and vertically only very slightly by dispersion. Plumes may migrate along the sewer line in a preferred pathway formed by the gravel pack and/or disturbed soils underlying the sewer. The plumes are very likely to be found near the water table, though they may plunge downward with distance from the source in response to displacement by infiltrating water and downward components of the hydraulic gradients where they occur.

Soil-gas contamination may result from the release of VOCs to the subsurface, both from the unsaturated zone and from groundwater plumes that occur within a few feet of the water table. These soil-gas plumes would then spread by diffusion and in response to pressure, temperature, and density gradients. Soil gas plumes, if they exist, would only pose a potential risk if they enter occupied structures.

5.7.3 Potential Exposure Pathways and Receptors

Potential exposure pathways which may be present onsite include dermal contact, and soil vapor inhalation to indoor air (via vapor intrusion) into occupied structures within close proximity to a release location. Potential human receptors include current and future; residents (child and adult), military/civilian workers, construction workers performing intrusive activities in the vicinity of the HAFB sewer system, vendors and service providers, and transient visitors. While groundwater is not locally extracted for use, human exposure to contaminants could result from inhalation of vapors from contaminated subsurface soil or groundwater. Site-specific descriptions of both potential human and ecological receptors present at HAFB are discussed in Sections 4.3 and 4.4 of this Work Plan, respectively.

5.8 Existing Data Gaps

Based on information currently available regarding the HAFB sewer system, the following data must be obtained to complete the CSM:

1. Collection of soil analytical data to identify the presence of any potential release area(s) along the length of the sewer system.

2. Installation and sampling of monitoring wells, if required, to assess groundwater conditions at locations where soil samples contained concentrations above action levels.

3. Compilation of existing basewide geotechnical soil data which will support a site-specific risk based evaluation (if required). More information regarding the existing basewide geotechnical soil data is provided in Section 6.3.2.1 of this Work Plan.

5.8.1 Data Acquisition

During Phase I of this RFI, subsurface soil sampling will be performed along the HAFB sewer system to identify potential sewer release area(s). Soil sampling locations have been pre-designated through the use of historical information identifying lengths of sewer where releases were likely to have occurred. The specific criteria used for the selection of soil sampling locations are; major sewer pipe junctions, downgradient of suspected releases, downgradient from SWMUs with suspected or known releases, and at locations where two sewer lines with different diameters and/or construction material connect.

Phase II of this investigation, if required, will include the installation and sampling of permanent monitoring wells at each soil sampling location which contained COPCs with

concentrations exceeding their corresponding action levels during the Phase I. During the installation of these monitoring wells, a soil sample will be collected from the capillary fringe (or the saturated zone) in each borehole to be converted into a monitoring well to aid in the vertical delineation of soil contamination. Proposed data collection locations and procedures along the HAFB sewer system are presented in Section 6 of this Work Plan.

5.8.2 Data Evaluation

All detected soil and groundwater data collected during the SWMU 183 RFI will be evaluated and compared with current New Mexico and Federal action levels for each medium. The project specific ARARs for the SWMU 183 RFI data evaluation are completely described in Section 6.2.1 of this Work Plan.

5.8.3 Risk Based Evaluation

Subsequent to the collection of analytical data, a risk-based evaluation may be performed to ensure that the risks to current and future receptors are acceptable along SWMU 183. A description of the risk assessment approach to be utilized, if required, is provided in Section 7 of this Work Plan.

5.9 Initial CSM Summary

This Section has presented a current conceptual understanding of the HAFB sewer system along with decision information requirements, status of information gathering, and actions required to obtain information. This information was used to create the DQOs outlined in Section 1.4 of this Work Plan

Figure 5-1 provides a 3-dimensional block diagram of the Initial CSM as described in the previous paragraphs. The diagram presents a generalized rendering of the Site; examples of key Site features; local geology/hydrogeology; and inferred contaminant type, pathways, and distributions. The diagram is not to scale, nor does it fully or accurately depict actual Site features and conditions.

It is important to re-emphasize that the Initial CSM provides an informed hypothesis or set of hypotheses about the Site, thus, actual conditions at the Site may vary significantly from those depicted in the block diagram.

This page intentionally left blank.

6 SAMPLING AND ANALYSIS PLAN FOR CHARACTERIZATION OF RELEASES OF HAZARDOUS WASTE

This section presents the SAP for the SWMU 183 RFI, including:

- Pre-Investigation Requirements
- Sampling Strategy
- Sampling Procedures
- Sample Analysis

The objectives of the SAP are threefold; first to identify potential releases to the soil at the most probable locations (major junctions, pipeline material/diameter changes, and downgradient from known releases); second, if COPCs are detected above soil ARARs, a monitoring well will be installed and a groundwater sample will be collected to determine if the water quality has been impacted at each soil boring location with a soil ARAR exceedence; and third, collect sufficient analytical data to support a site-specific human health and ecological risk assessment (if required).

Soil and groundwater sampling procedures will utilize USEPA standard methods to ensure sample quality and provide a platform for efficient collection. Sample analysis will only be conducted by a NELAP certified offsite laboratory to provide an efficient means of identifying release locations, determining what constituents are present in identified release areas, and delineating the nature and extent of identified constituents.

6.1 Pre-investigation Requirements

Prior to initiating field sampling activities, several pre-investigation and approval documents must be acquired. This includes the Air Force Form (AF Fm) 332, the HAFB dig permit (for utility clearances), site security measures, and notifying the applicable facility manager. NationView will coordinate all pre-investigation project requests for Base installation support services through the 49th Civil Engineering Squadron/Environmental Asset Management Flight (CES/CEA). If required, a pre-investigation meeting and site walk-through will be conducted with the USACE representative, HAFB personnel, and the NationView Site Manager, to inspect site conditions for site/equipment access, equipment staging, decontamination area(s), potential site hazards, and emergency evacuation routes. Also reviewed at this time will be project procedures in accordance with the schedule and planned activities.

6.1.1 AF Form 332

Prior to initiating drilling activities, a completed and approved AF Fm 332 will be obtained by the 49th CES/CEA. This form authorizes construction work at HAFB and is

required for the initiation of any construction work. This is a work order that describes what activities will take place at SWMU 183 during this investigation.

6.1.2 Dig Permit/Utility Clearances

Prior to the submittal of the dig permit (AF Fm 103), the sampling locations will be clearly delineated with marker flags or stakes. Utility clearance approvals will be completed by the appropriate HAFB utility office (e.g., telephone, sewer, water, natural gas etc.). Upon receipt of the approved dig permit (AF Fm 103) with the utility clearances, the NationView Site Manager or other authorized project personnel will complete a site walk-through confirming the dig permit authorizations and make any required changes.

6.1.3 Site Security

Site security is concerned with safety at the site during all soil and groundwater sampling activities, and areas surrounding the investigation activities, and will be addressed as outlined in the *Basewide Health and Safety Plan* (Bhate, 2003b). At a minimum, an exclusion zone will be secured with caution tape, and traffic cones will surround the perimeter of the sample locations. The size of the exclusion zone will be determined by the size of the sampling and support equipment, and the prevailing site conditions. Open boreholes will not be left unattended without first securing the immediate area surrounding the borehole, and covering the opening so that it does not become a hazard.

6.2 Sampling Strategy

The sampling strategy for the SWMU 183 RFI has been designed according to the concepts and guiding principles of the USEPA and the requirements established in the HAFB Hazardous Waste Permit NM6572124422 (specifically Appendix 4-B). The primary sampling strategy is to determine if a release(s) to the soil and/or groundwater from the HAFB sewer system has occurred. Pre-designated sampling locations, sampling analysis, quantities, and location rationale are also presented in this section.

As presented in Section 1.3 of this Work Plan, the primary project objectives of the SWMU 183 RFI sampling plan are to:

- Identify locations where releases from the sewer to soil and/or groundwater would most likely have occurred,
- Determine the nature and extent of contamination at each identified release location,
- Collect sufficient analytical data to complete a site specific risk assessment to determine the affect of releases on human health and/or the environment, and

- Collect the proper data to meet the DQOs to support a NFA Status under NFA Criterion 5 and obtain a Class III permit modification to remove this site from Table A of the HAFB Permit NM6572124422 (NMED, 2005).

Implementation of this work plan will be conducted in two phases. Phase I will involve the collection of 52 subsurface soil samples immediately below the sewer lines. As described in Section 6.3.2 of this Work Plan, the subsurface soil samples will be collected with direct push technology (DPT) at the 52 proposed locations presented on Plates 1 and 2. Phase II (monitoring well installation and groundwater sampling) will be conducted at soil boring locations where a COPC has been detected above an ARAR for soil (fully described in Section 6.2.1.1 of this Work Plan) to determine if the groundwater quality has been impacted. Phase II will be implemented as a separate mobilization after all of the Phase I soil data has been received and validated. All of the soil and groundwater samples collected during this investigation will be sent offsite to TestAmerica Laboratories, Inc. in Denver, Colorado (TAL-DEN) or TestAmerica Laboratories Inc., in St. Louis, Missouri (TAL-STL). Both of these laboratories are NELAP accredited.

6.2.1 Use of Applicable or Relevant and Appropriate Requirements

All of the analytical data collected during this RFI (Phase I and II) will be compared to their respective ARARs (action levels) that are specified in Appendix 4-F *Action Levels and Cleanup Levels* of the HAFB Hazardous Waste Permit No. NM6572124422 (NMED, 2004b). The soil and groundwater data evaluation will consist of a direct comparison to the applicable action level screening criteria. The applicable screening criteria will be presented on the analytical data summary tables for the analytes and media of concern in the RFI report. The following sections present the regulatory criteria that will be used to evaluate the analytical data.

6.2.1.1 Soils

<u>VOCs, SVOCs, Pesticides/Herbicides, PCBs, Perchlorate, and TAL Metals</u>

The residential Soil Screening Levels (SSLs) established in NMED's *Technical Background Document for Development of Soil Screening Levels* (NMED, 2009) will be used as the primary action levels for VOCs, SVOCs, Pesticides/Herbicides (Sub-basin 4 only), PCBs, Perchlorate (Sub-basin 8 only), and TAL Metals. As per the HAFB Permit, Appendix 4-F V.1 (NMED, 2004b) if a NMED soil cleanup level has not been established for a particular COPC (e.g. 2-methylnapthalene) that constituent will be compared to the USEPA Region 6 *Human Health Medium Specific Screening Level* (HHMSSL). However, under a recent Interagency Agreement as an update of the USEPA Region 3 Risk Based Concentration (RBC) Table, Region 6 HHMSSL Table, and the Region 9 Preliminary Remediation Goal (PRG) Table; the Region 6 HHMSSLs have been combined into the Regional Screening Level (RSL) Table (USEPA, 2009a).

Additionally, all detected TAL metals will be compared their respective HAFB Background, Composite Soil, Upper Tolerance Limits (UTLs) (pending NMED approval of the *Basewide Background Study Report, Holloman Air Force Base, New Mexico* [NationView|Bhate JV III, 2009]).

Total Petroleum Hydrocarbons

The action levels for TPH are established in the *New Mexico Environment Department TPH Screening Guidelines* (NMED, 2006). However, since it is not known what type of petroleum contamination may be present, the TPH screening guideline (residential direct exposure), for unknown oil (800 milligrams per kilogram [mg/kg]) (Table 2b, NMED, 2006) will be used as the action level for total TPH concentrations (combined gasoline range organics [GRO], diesel range organics [DRO], and oil range organics [ORO]).

Radionuclides

Table A.1 of USEPA's *Soil Screening Guidance for Radionuclides: Technical Background Document* (USEPA, 2000), provides generic SSLs for 60 radionuclides in units of pico-curies per gram (pCi/g). The values listed in the "Inhalation of Fugitive Dusts" column of Table A.1 assume that no decay, dilution, or attenuation of contaminants will occur and have been developed assuming future residential land and related exposure scenarios; thus offering the most conservative values for these contaminants. If the SSLs presented in Table A.1 are exceeded, a more site-specific evaluation will be performed to ensure that the site conditions and exposure pathways match those used to develop generic SSLs. The site-specific evaluation involves developing an exposure pathway scenario that addresses the risk associated with these contaminants knowing the use or future use of the particular area of the Site. The evaluation may also include collecting site-specific soil parameters (such as the dry bulk density and percent soil moisture), and further sampling of soils to measure radionuclide levels in surface and subsurface soils.

Given the historical use of radioactive materials at HAFB (Sub-basins 8 and 9 only), the following isotopes may still be present in the subsurface: tritium, carbon 14, radium 226, and radium 228. Although iodine 125 is reported to have been used at HAFB, it is likely that this isotope has degraded (via decay) to acceptable levels. This statement is based on the understanding that iodine 125 has not been used in approximately 30 years and that it is known to have a half-life of 60 days. Additionally, carbon 14, radium 226 and radium 228 will be compared to their respective HAFB Background, Composite Soil, UTLs (pending NMED approval of the *Basewide Background Study Report, Holloman Air Force Base, New Mexico* [NationView|Bhate JV III, 2009]). Tritium was not included as an analyte in the Basewide Background Study.

Nitrate, Sulfate, and Chloride

Detections of nitrate in soil samples will be compared to the SSL established in the NMED *Technical Background Document for Development of Soil Screening Levels* (100,000 mg/kg). Currently the NMED and USEPA Region 6 have not established soil clean up levels or SSLs for sulfate and chloride. Additionally, nitrate, sulfate, and chloride analyses were not included as soil analytes in the *Basewide Background Study Report, Holloman Air Force Base, New Mexico* [NationView|Bhate JV III, 2009]).

6.2.1.2 Groundwater

VOCs, SVOCs, Pesticides/Herbicides, PCBs, and TAL Metals

There are two applicable standards for groundwater: New Mexico WQCC groundwater standards for contaminants (NMAC 20.6.2.3103) and the USEPA's *National Priority Drinking Water Regulations* (USEPA, 2009b) Maximum Contaminant Levels (MCLs). The lower of the two standards will be used as action levels for VOCs, SVOCs, Pesticides/Herbicides, PCBs, and TAL Metals in groundwater. Additionally, all detected TAL metals will be compared to their respective HAFB Background, Dissolved Metals UTLs (pending NMED approval of the *Basewide Background Study Report, Holloman Air Force Base, New Mexico* [NationView|Bhate JV III, 2009]).

Total Petroleum Hydrocarbons

The action levels for TPH are established in the *New Mexico Environment Department TPH Screening Guidelines* (NMED, 2006). The NMED TPH screening guideline for unknown oil (50.0 mg/L) will be the action level that will be compared to total TPH concentrations (GRO, DRO, and ORO) detected in groundwater (Table 2b, NMED, 2006).

Radionuclides

Table 2.3 of USEPA's *Soil Screening Guidance for Radionuclides: Technical Background Document* (USEPA, 2000), provides the Federal MCLs for 60 radionuclides in groundwater. The MCLs in Table 2.3 were obtained from *Drinking Water Regulations and Health Advisories* (USEPA, 1995).

Given the historical use of radioactive materials at HAFB, the following isotopes may still be present in the subsurface: tritium, carbon 14, radium 226, and radium 228. Although iodine 125 has been used at HAFB, it is likely that this isotope has degraded (via decay) to acceptable levels. This statement is based on the understanding that iodine 125 has not been used in approximately 30 years and that it is known to have a half-life of 60-days. Additionally, carbon 14, radium 226, and radium 228 will be compared their respective HAFB Background, Total Groundwater UTLs (pending NMED

approval of the *Basewide Background Study Report, Holloman Air Force Base, New Mexico* [NationView|Bhate JV III, 2009]). Tritium analysis was not included as an analyte in the Basewide Background Study.

Nitrate, Sulfate, Chloride, and Total Dissolved Solids

There are three applicable standards for nitrate, sulfate, chloride, and TDS detected in groundwater: New Mexico WQCC groundwater standards for contaminants (NMAC 20.6.2.3103) and the USEPA's *National Priority Drinking Water Regulations* (USEPA, 2009b) MCLs (nitrate), and secondary MCLs (chloride, sulfate, and TDS). The lower of these standards will be used as the action levels for nitrate, chloride, sulfate, and TDS. Additionally, nitrate, sulfate, chloride, and TDS will be compared to their respective HAFB Background, Total Groundwater UTLs (pending NMED approval of the *Basewide Background Study Report, Holloman Air Force Base, New Mexico* [NationView|Bhate JV III, 2009]).

Perchlorate

As per the HAFB Hazardous Waste Facility Permit, Section III.1.2, NMED at this time, has adopted the USEPA drinking water reference dose as an interim groundwater clean up level. In December 2008, the USEPA issued an Interim Drinking Water Health Advisory for exposure to perchlorate of 15 micrograms per liter (µg/L) in water (USEPA, 2008b), which will serve as the action level for perchlorate detections in groundwater.

6.2.2 Field Sampling Location Plan Design Basis

A design basis was used to develop the SWMU 183 RFI field sampling location plan (see Plates 1 and 2 and Table 3-1 of this Work Plan). The design basis was used to provide a consistent rationale for pre-designating Phase I sampling locations along the sewer in the context of historical (pre-1998 sewer line conditions) and current sewer construction and operational use information. As the majority of the sewer line has been lined or replaced since 1998, effort was made to maximize the value of historical information in identifying lengths of sewer where releases were most reasonably and likely to have occurred.

The following is a summary of the criteria used for the design basis used for Phase I borehole/soil sampling locations:

- Major sewer pipe junctions
- Downgradient from suspected releases
- Downgradient from SWMUs with suspected or known releases
- Locations where two sewer lines with different diameters and/or construction material connect

6.2.2.1 Phase I Soil Borings – Sewer Release Determination

As shown on Plates 1 and 2, 52 pre-designated soil borings (SWMU183-DP01 through SWMU183-DP52) will be drilled at the strategic locations referenced above to determine if a release from the sewer line has occurred. Each of these soil borings will be advanced approximately two feet below the invert of the line (approximately 8 to 10 ft bgs). The purpose of these boreholes and soil samples is to determine if the sewer system has released any detected COPCs that are above the ARARs (as described in Section 6.2.1.1 of this Work Plan) into the subsurface. Prior to drilling, a confirmation of the sewer invert depth will be determined by opening the nearest manhole and measuring the depth to the bottom of the sewer line with a measuring tape. The soil sampled will be analyzed for the parameters referenced in Section 3.4 of this Work Plan. Once the soil sample has been obtained, each soil boring will be abandoned with hydrated bentonite chips. A detailed description of the Phase I sampling and analysis procedures are described below in Section 6.3 of this Work Plan.

6.2.2.2 Phase II Monitoring Well Installation – Groundwater Impact Determination

Permanent monitoring wells will be installed immediately downgradient from each soil boring location where there has been a soil ARAR exceedence (described in Section 6.2.1.1 of this Work Plan). A groundwater sample will be collected from each monitoring well and analyzed for the parameters referenced in Section 3.4 of this Work Plan. Therefore, a maximum of 52 permanent monitoring wells (SWMU183-MW01 through SWMU183-MW52) could be installed during Phase II investigation. The purpose of these monitoring wells is to determine if COPCs detected in soil above the ARARs have impacted the groundwater quality.

In order to determine the vertical extent of soil contamination, a soil sample will be collected at the capillary fringe (or the saturated zone) from each of the boreholes that are converted into monitoring wells. The soil sample will be analyzed for all of the analyses referenced in Section 3.4 of this Work Plan. All permanent monitoring wells installed during this investigation will remain in place until the NMED approves their removal. Furthermore, a monitoring well will not be installed at a specific soil boring location if the ARAR exceedence is below its respective UTL (pending NMED approval of the *Basewide Background Study Report, Holloman Air Force Base, New Mexico* [NationView|Bhate JV III, 2009]. This criteria only pertains to the inorganic constituents (e.g. TAL metals, radionuclides carbon-14, radium 226 and radium 228) that were included in the Background Study. A detailed description of the Phase II sampling and analysis procedures are described below in Section 6.3 of this Work Plan.

6.3 Sampling Procedures

This section describes the sampling procedures and technologies to be used during the project. References are made to documents describing standard methodologies from a variety of sources including:

- *Final Basewide Quality Assurance Project Plan* (Bhate, 2003a)
- HAFB Standard Operating Procedures (SOPs) from Appendix A of the NMED approved HAFB Basewide QAPP (Bhate, 2003a). The specific HAFB SOPs for this sampling event are listed below:
  - HAFB SOP-1 Documentation, Sample Handling, Chain-of Custody, and Shipping
  - HAFB SOP-2 Sampling Equipment Documentation
  - HAFB SOP-3 Staking, Utility Clearance, and Permitting
  - HAFB SOP-4 Direct Push Sampling for Soil and Groundwater
  - HAFB SOP-5 Soil Sampling for Chemical Analysis
  - HAFB SOP-6 Procedure for Field Screening of Volatile Organics
  - HAFB SOP-7 Lithologic Description and Geotechnical Sampling
  - HAFB SOP-8 Groundwater Sampling for Chemical Analysis
  - HAFB SOP-9 Field Management of Investigation-Derived Waste
  - HAFB SOP-10 Borehole Abandonment and Site Restoration
- Bhate SOP No. 1 *Soil Sampling and Subsurface Investigations* (Bhate, 2002) (included in Appendix C of this Work Plan)
- Bhate SOP No. 10 *Subsurface Water Investigation* (Bhate, 2002) (included in Appendix C of this Work Plan)
- SOPs prepared by equipment manufacturers (e.g., Geoprobe Systems® DT325 Dual Tube Sampling System Standard Operating Procedure, Technical Bulletin No. MK3138 [included in Appendix C of this Work Plan])

The following sections describe the locations and procedures for DPT soil and groundwater sampling and the groundwater monitoring well installation, sampling, and analysis to be performed.

6.3.1 Environmental Media to be Sampled

Two environmental media (matrices) will be sampled during the SWMU 183 RFI, as follows:

1. Soil
   a. DPT core sampling (Phase I)
   b. Hollow stem auger (HSA) technology borehole sampling (Phase II, if required)

2. Groundwater
    a. DPT-installed permanent monitoring wells (Phase II, if required)
    b. HSA-installed permanent monitoring wells (Phase II, if required)

6.3.2 Soil Sampling

As described in Section 6.2.2.1 of this Work Plan, soil sampling will be undertaken at each of the 52 pre-determined borehole locations (Plates 1 and 2). A subsurface soil sample will be collected immediately below the sewer line invert as determined by measuring the depth to the bottom of the sewer line at the nearest manhole. Each location will be cleared for subsurface utilities in accordance with HAFB SOP-3 in the HAFB Basewide QAPP (Bhate, 2003a). Soil samples will be collected continuously from soil borings using DPT methodology in accordance with HAFB SOP-4. Each boring will be visually classified and lithology described in the field according to HAFB SOP-7 and the Unified Soil Classification System (USCS) (American Society for Testing and Materials [ASTM] D 2487-92 [ASTM, 2006a] and ASTM D 2488-90 [ASTM, 2006b]).

Each soil core will be field screened every two feet with a photoionization detector (PID) for health and safety purposes in accordance with HAFB SOP-6. Additionally, field radiation screening with a Ludlum 449 scintillation meter (for health and safety purposes only) will also be conducted at each of the boreholes drilled within sub-basins 8 and 9. All Phase I DPT subsurface soil samples will be collected as discrete (grab) samples from the interval directly below the sewer line invert. Notation in the field logbook will also be made of any visual (discoloration) and/or aromatic observations that are indicative of potential contamination. Soil sampling will follow HAFB SOP-5 of the HAFB Basewide QAPP (Bhate, 2003a). Upon completion of sampling at each location, the DPT borehole will be abandoned using the procedures described in HAFB SOP-10. A qualified surveyor will locate the DPT boreholes using a global positioning system (GPS). All horizontal coordinates will be referenced to the State Plane Coordinate System, New Mexico Central and surveyed to an accuracy of +/- 1.0 ft.

Soil samples will be analyzed by an offsite NELAP certified laboratory (TAL-DEN or TAL-STL) for the following parameters by sewer sub-basin:

- VOCs by USEPA SW-846 Method 8260B (Sewer Sub-basins 1 - 10)
- SVOCs by USEPA SW-846 Method 8270C (Sewer Sub-basins 1 - 10)
- TAL Metals by USEPA SW-846 Method 6010B/7471A (Sewer Sub-basins 1 - 10)
- TPH (GRO, DRO, ORO) by USEPA SW-846 Method 8015B (Sewer Sub-basins 1 - 10)
- PCBs by USEPA SW-846 Method 8082 (Sewer Sub-basins 1 - 10)
- Nitrate by USEPA Methods for Chemical Analysis of Water and Wastes (MCAWW) Method 353.2 (Sewer Sub-basins 1 - 10)
- Sulfate by USEPA SW-846 Method 9056 (Sewer Sub-basins 1 - 10)

- Chloride by USEPA SW-846 Method 9056 (Sewer Sub-basins 1 - 10)
- Moisture Content by USEPA MCAWW Method 160.3 (Sewer Sub-basins 1 - 10)
- Organochlorine Pesticides by USEPA SW-846 Method 8081A (only Sewer Sub-basin 4)
- Chlorinated Herbicides by USEPA SW-846 Method 8151A (only Sewer Sub-basin 4)
- Perchlorate by USEPA SW-846 Method 6860 (only Sewer Sub-basin 8)
- Carbon-14 by Eastern Environmental Radiation Facility (EERF) Method C-01-1 (only Sewer Sub-basins 8 and 9)
- Tritium by USEPA Method 906.0 (only Sewer Sub-basins 8 and 9)
- Radium 226 by USEPA Method 903.0 MOD (only Sewer Sub-basins 8 and 9)
- Radium 228 by USEPA SW-846 Method 9320 (only Sewer Sub-basins 8 and 9)

The sewer sub-basin specific analytical requirements for soil samples are summarized in Tables 6-1 through 6-4. Samples selected for offsite laboratory analysis will be labeled, handled, and prepared for shipment in accordance with HAFB SOP-1. Table 6-5 of this Work Plan provides details on sample volumes, containers, preservation, and method of analysis for all analyses. The detection reporting limits for all analytical parameters and the quality assurance sampling requirements (trip blanks, duplicates, and matrix spike/matrix spike duplicates [MS/MSD]) are summarized in the QAPP Addendum (see Appendix A of this Work Plan). Additionally, each cooler containing samples for VOC analysis will require a trip blank. The samples will be placed on ice and shipped under strict chain-of-custody to either TAL-DEN or TAL-STL (radionuclide samples only). Residual soil from the soil sampling will be discarded in accordance with the waste management procedures established in Section 6.3.7 of this Work Plan, Management of Investigation Derived Wastes.

6.3.2.1 Geotechnical Data

If a risk assessment is required, geotechnical data is necessary for understanding the physical aspects of the environment which would affect the migration and fate of the release and identification of exposure pathways for both human and non-human receptors. The required geotechnical parameters for conducting a risk assessment include the following analyses:

- Moisture content (USEPA MCAWW Method 160.3)
- Dry bulk density (ASTM Method D2937)
- Specific gravity (ASTM Method D1429)
- Fractional organic carbon content (ASTM Method D2974)

If it is determined that a risk assessment for SWMU 183 is required, the geotechnical data collected during the recent Accelerated Corrective Measures (ACM) Multiple Sites investigation conducted by Bhate in 2007 will be utilized for the SWMU 183 risk based evaluation. A total of 16 geotechnical samples were collected and analyzed for the

parameters listed above in accordance with the NMED approved *Final Accelerated Corrective Measures Work Plan, Multiple Sites, Holloman AFB, New Mexico* (Bhate, 2007). During the ACM Multiple Sites investigation, two undisturbed geotechnical samples were collected from eight sites in upgradient areas that had not been impacted by contamination. The following eight ERP sites are located throughout HAFB and are representative of geotechnical conditions along the sewer system:

- OT-20 Sewage Lagoons Disposal Trenches
- OT-32 Collapsed Former Primate Research Area Sewer Lines
- OT-38 Test Sled Maintenance Area
- OT-45 Old Aerospace Ground Equipment (AGE) Refueling Station
- SS-12 Northeast Fuel Line Spill Site
- SS-18 Chromic Acid Spill Site
- RW-42 Radioactive Waste Burial Site
- OT-37 Early Missile Test Site

The locations of these ERP Sites (Table A SWMUs) are shown on Plates 1 and 2. The geotechnical data collected from these sites by Bhate during the ACM Multiple Sites investigation in 2007 is summarized in Table B-1 located in Appendix B-3 of this work plan.

6.3.2.2 Direct Push Technology Soil Sampling (Phase I)

The Phase I boreholes (SWMU183-DP01 through SWMU183-DP52) will be installed and sampled using DPT drilling methods within each of the 10 sewer sub-basins that comprise the HAFB basewide sewer system (SWMU 183). The maximum depth of each borehole is anticipated to be 10 ft bgs or less, based on the expected 6 ft bgs depth of the sewer invert. Prior to drilling (each location) the sewer invert depth will be determined by opening the nearest manhole and measuring the depth to the bottom of the sewer line with a measuring tape.

Soil sampling will be accomplished using a Geoprobe Systems® DT325 Dual Tube Sampling System (coring tool) in accordance with the Standard Operating Procedure *Geoprobe Systems® Technical Bulletin MK3138* (included in Appendix C of this Work Plan). Samples will be collected from the DT325 tool for offsite laboratory analysis. The DT325 coring tool will be advanced to a depth of approximately 2 feet below the sewer line invert (8 to 10 ft bgs) to collect soil samples for analysis.

During soil sampling the DT325 tool will be removed from the ground and the clear PVC liner will be removed from the liner sheath at the ground surface. The liner will be capped and marked with the depth on the top and bottom of the liner using an indelible pen. The borehole number will also be written on the liner. The liner will then be opened with a cutting tool and the samples will be obtained for lithologic log, headspace readings (PID), and offsite chemical analysis. A total of 52 soil samples (based on one sample per borehole) will be collected for offsite analysis by a NELAP accredited

laboratory. The soil samples plus the associated QA/QC samples submitted for chemical analysis will be shipped to TAL-DEN or TAL-STL for analysis as summarized in Tables 6-1 through 6-4.

6.3.3 Groundwater Investigation (Phase II)

If the results of any soil sample analysis exceed the ARARs specified in Section 6.2.1.1 of this Work Plan, a Phase II investigation (Groundwater Sampling) will be implemented and a permanent monitoring well will be installed immediately downgradient from the corresponding DPT soil boring location. Depending on the depth to groundwater, permanent monitoring wells will either be installed with a DPT drill rig (if depth to groundwater is less than 20 ft bgs) or a HSA drill rig (if depth to groundwater is greater than 20 ft bgs). Based on groundwater elevation data collected during previous environmental investigations, the depth to groundwater is generally greater than 20 ft bgs at the SWMUs/AOCs/ERP sites that are located north of Dezonia Road (Plate 1). Depending on the number of boreholes (shown on Plates 1 and 2) that have soil exceedences above the ARARs, a maximum of 52 monitoring wells (SWMU183-MW01 through SWMU183-MW52) could be installed during the Phase II investigation, however the installation of 52 monitoring wells is an unlikely scenario.

Groundwater samples will be collected from small diameter permanent monitoring wells installed through the DPT soil core holes or HSA soil boreholes as described in Sections 6.3.3.1 and 6.3.3.2 of this Work Plan. In areas of the site where the depth to groundwater is less than 20 feet bgs (e.g., south of Dezonia Road) permanent monitoring wells will be installed through the outer casing of the DT325 dual tube coring tool. Where the water table is deeper than 20 feet bgs the monitoring wells will be installed through the HSAs advanced using a HSA rig with enough torque to efficiently advance the augers.

Following installation of the permanent monitoring well, the riser will be cut off below the ground surface and completed as a flush mount well completion. The elevation of the measuring point at the top of the casing will be established and the water level will be monitored over time until it stabilizes.

Groundwater samples will be analyzed by an offsite NELAP certified laboratory for the following parameters by sewer sub-basin:

- VOCs by USEPA SW-846 Method 8260B (Sewer Sub-basins 1 - 10)
- SVOCs by USEPA SW-846 Method 8270C (Sewer Sub-basins 1 - 10)
- TDS by USEPA Standard Method (SM) 18 Method 2540C (Sewer Sub-basins 1 - 10)
- TAL Metals by USEPA SW-846 Method 6010B/7470A (Sewer Sub-basins 1 - 10)
- TPH (GRO, DRO, ORO) by USEPA SW-846 Method 8015B (Sewer Sub-basins 1 - 10)

- PCBs by USEPA SW-846 Method 8082 (Sewer Sub-basins 1 - 10)
- Nitrate by USEPA MCAWW Method 353.2 (Sewer Sub-basins 1 - 10)
- Sulfate by USEPA SW-846 Method 9056 (Sewer Sub-basins 1 - 10)
- Chloride by USEPA Standard Method (SM) 19 Method 4500CL C (Sewer Sub-basins 1 - 10)
- Organochlorine Pesticides by USEPA SW-846 Method 8081A (only Sewer Sub-basin 4)
- Chlorinated Herbicides by USEPA SW-846 Method 8151A (only Sewer Sub-basin 4)
- Perchlorate by USEPA SW-846 Method 6860 (only Sewer Sub-basin 8)
- Carbon-14 by EERF Method C-01-1 (only Sewer Sub-basins 8 and 9)
- Tritium by USEPA 906.0 (only Sewer Sub-basins 8 and 9)
- Radium 226 by USEPA Method 903.0 MOD (only Sewer Sub-basins 8 and 9)
- Radium 228 by USEPA Method 904 MOD (only Sewer Sub-basins 8 and 9)

The sewer sub-basin specific analytical requirements for groundwater samples are summarized in Tables 6-6 through 6-9. Samples selected for offsite laboratory analysis will be labeled, handled, and prepared for shipment in accordance with HAFB SOP-1. Table 6-5 of this Work Plan provides details on sample volumes, containers, preservation, and method of analysis for all groundwater analyses. The detection reporting limits for all analytical parameters and the quality assurance sampling requirements (trip blanks, duplicates, and MS/MSD) are summarized in the QAPP Addendum (see Appendix A of this Work Plan). Each cooler containing samples for VOC analysis will require a trip blank. The samples will be placed on ice and shipped under strict chain-of-custody to TAL-Den or TAL-STL (radionuclide samples only). Purged groundwater from sampling will be discarded in accordance with the waste management procedures established in Section 6.3.7 of this Work Plan.

6.3.3.1 DPT Monitoring Well Installation

Where the depth to groundwater is less than 20 feet bgs (south of Dezonia Road), groundwater samples will be collected from permanent 1-inch diameter, PVC monitoring wells. Each permanent monitoring well will extend to a minimum depth of 5 feet below the water table and be completed with 1-inch diameter, PVC, pre-packed well screen. The coring tool will be advanced at least 5 feet below the water table within the same hole that the soil samples were collected from and the core barrel will then be removed, leaving the outer casing in place. In addition, a soil sample will be collected from the capillary fringe (or the saturated zone) from each DPT monitoring well borehole to determine the vertical extent of contamination. The DPT subsurface soil samples will be logged and collected as described in Section 6.3.2 of this Work Plan. The soil sample will be analyzed for the sub-basin specific parameters outlined above in Section 6.3.2 and shown on Tables 6-1 through 6-4.

Each monitoring well will be constructed in accordance with Bhate SOP No. 10 (included in Appendix C of this Work Plan) and will extend to a minimum depth of 5 feet below the water table and be completed with 10 feet of 1-inch diameter 0.010-inch factory slotted schedule 40 pre-packed PVC screen. The pre-packed screens will be lowered to the bottom of the outer casing of the Geoprobe Systems® DT325 Dual Tube Sampling system. The pre-packed screens will be threaded to 1-inch, schedule 40 PVC flush joint riser pipe in 5 or 10 foot length sections to the ground surface. A 1-inch locking cap will be secured at the top of each monitoring well.

Once the screen and riser are in place in the bottom of the casing below the water table, the outer casing of the coring tool will be retracted to expose the screen to the formation. Upon removal of all DPT tooling from the borehole, additional sandpack consisting of 10/20 Colorado Silica Sand will be placed around the well screen to a height of 2 feet above the top of the screened interval. A minimum 2 ft thick granular bentonite seal will be placed above the sand filter pack and hydrated with potable water. The remaining annular space will be backfilled with neat Portland cement. The wells will be completed as 8-inch diameter flush mount well completions (water tight vault with a rubber gasket) with a concrete pad (circular 2-foot diameter flush with ground surface). If the well is installed in the street or parking lot a minimum 12-inch diameter by 4-inch thick concrete pad shall be constructed around the vault with the top outer edge flush with the asphalt pavement.

The DPT monitoring wells will be developed in accordance with Bhate SOP No. 10 (included in Appendix C of this Work Plan). The completed wells will be developed to remove fine particulates and improve hydraulic communication with the surrounding saturated material. Well development will begin no sooner than 12 hours after grouting has been completed. Water levels in newly installed wells will be monitored until levels have reached equilibrium based on three successive water level measurements made over a period of 10 minutes. Once the equilibrium water level has been recorded, the well will be developed to remove sediment which may have been introduced into the borehole and formation during drilling and installation activities. Each well will initially be surged with a stainless steel bailer in 2-to-3-foot intervals from the bottom of the screened interval to agitate fine grained sediment from the filter pack. At the completion of surging, well development will be conducted with a peristaltic pump attached to polyethylene tubing to remove sediment from the filter pack and well casing. The use of pre-pack screens will minimize the amount of sediment entering the monitoring well. Monitoring well development will take place by over-pumping each well until at least five well volumes have been removed, and the turbidity, potential of hydrogen (pH), specific conductivity, dissolved oxygen, and temperature have stabilized by +/- 10 percent for at least three consecutive readings.

6.3.3.2 Hollow Stem Auger Monitoring Well Installation

Where the depth to the water table is greater than 20 ft bgs (north of Dezonia Road) and groundwater sampling is required, sampling will be accomplished by installing permanent monitoring wells using a Central Mining Equipment (CME)-85 HSA drill rig. The hollow stem augers will be 8 ¼ -inch outside diameter, 4 ¼-inch inside diameter and fitted with a finger bit on the lead auger. In addition, a soil sample will be collected from the capillary fringe (or the saturated zone) from each HSA monitoring well borehole to determine the vertical extent of contamination. The HSA subsurface soil samples will be logged and collected in accordance with Bhate SOP No. 1 (included in Appendix C of this Work Plan). The soil samples will be analyzed for the sub-basin specific parameters outlined above in Section 6.3.2 of this Work Plan and shown on Tables 6-1 through 6-4.

Each monitoring well will be constructed in accordance with Bhate SOP No. 10 (Appendix C) and will extend to a minimum depth of 5 feet below the water table and be completed with 10 feet of 2-inch inside diameter 0.010-inch factory slotted schedule 40 PVC screen. The augers will be advanced in 5-foot flights until the lead auger is at least 5 feet below the water table. The permanent monitoring well will be constructed of a 5-foot length of 2-inch inside diameter, 0.010 inch-slot screen with 10/20 Colorado Silica Sand placed around the annulus of the screen and extending 2 feet above the top of the screen. Bentonite chips will be placed above the sand pack. The screen will be threaded to 2-inch outside diameter flush joint riser in 5 or 10 foot length sections.

The remaining annular space will be backfilled with neat Portland cement. The wells will be completed as 8-inch diameter flush mount well completions (water tight vault with a rubber gasket) with a concrete pad (3 feet by 3 feet square by 4 inches thick). If the well is installed in the street or parking lot, a minimum 12-inch diameter by 4-inch thick concrete pad shall be constructed around the vault with the top outer edge flush with the asphalt pavement. A 2-inch diameter locking cap will be secured at the top of each monitoring well.

The HSA monitoring wells will also be developed in accordance with Bhate SOP No. 10. The completed wells will be developed to remove fine particulates and improve hydraulic communication with the surrounding saturated material. Well development will begin no sooner than 12 hours after grouting has been completed. Water levels in newly installed wells will be monitored until levels have reached equilibrium based on three successive water level measurements made over a period of 10 minutes. Once the equilibrium water level has been recorded, the well will be developed to remove sediment which may have been introduced into the borehole and formation during drilling and installation activities. Each well will initially be surged in 2-to-3-foot intervals from the bottom of the screened interval to agitate fine grained sediment from the filter pack. At the completion of surging, well development will be conducted with a stainless steel submersible pump to remove sediment from the filter pack and well casing.

Monitoring well development will take place by over-pumping each well until at least five well volumes have been removed, and the turbidity, pH, specific conductivity, dissolved oxygen, and temperature have stabilized by +/- 10 percent for at least three consecutive readings.

6.3.4 Groundwater Sampling

Once well development has been completed, and adequate time for recharge has been allowed (14 days) each of the new monitoring wells (52 maximum) will be purged using low flow sampling techniques (Bhate SOP No. 10). A peristaltic pump equipped with polyethylene tubing will be used to bring sample water to the surface where indicator field parameters will be monitored in a flow through cell. Field parameters will be measured every 1 well volume. Groundwater samples will not be obtained until 3 consecutive field parameter measurements have stabilized. Stabilization occurs when the pH measurements remain constant within 0.1 units; specific conductivity, dissolved oxygen and temperature vary by no more than 10 percent; and turbidity by no more than 5 nephelometric turbidity units (NTUs). Utilizing low-flow purging and sampling techniques may require removal of a greater volume of water than three to five volumes. Once field parameters have stabilized, sample tubing will be removed from the monitoring well, and temporarily placed into a new plastic bag. Groundwater samples to be analyzed for VOCs will be collected with a disposable Teflon® bailer. Following the collection of groundwater samples for VOC analysis, sample tubing will be re-inserted into the well to collect groundwater samples for the remaining analytes. The TAL metals groundwater samples will be filtered with a 0.45 micron filter for a dissolved metals analysis. A new length of polypropylene tubing and disposable Teflon® bailer will be used for each well and the tubing in the peristaltic pump head will be replaced with a new piece of tubing for each well. Water level indicators will be decontaminated prior to use at each well.

A maximum of 52 groundwater samples (based on one sample per well and assuming that all 52 DPT boreholes have ARAR exceedences) will be collected for offsite analysis by a NELAP accredited laboratory. The groundwater samples plus the associated QA/QC samples for submitted for chemical analysis will be shipped to TAL-DEN or TAL-STL (radionuclide samples only) for analysis as summarized in Tables 6-6 through 6-9.

6.3.4.1 Groundwater Elevations

Twenty four hours after each of the monitoring wells that comprise the SWMU 183 network has been sampled, the depth to groundwater will be measured. Elevations will be measured for each permanent monitoring well that is installed during the Phase II investigation. A current potentiometric surface map of SWMU 183 will be developed from the groundwater elevation data collected during this RFI.

6.3.4.2 Surveying

A qualified Surveyor will survey each of the new monitoring well locations using GPS in accordance with methods described in the Basewide QAPP (Bhate, 2003a). Horizontal locations will be relative to the State Plane Coordinate System, New Mexico Central and surveyed to an accuracy of +/- 1.0 ft. Vertical elevations will be referenced to the North American Datum (NAD) 1983. The top of casing (vertical control) will be used to determine the depth and elevation of the groundwater and surveyed to an accuracy of +/-0.01 ft. During this investigation the source area(s) will be mapped to scale showing ancillary structures, sampling locations, buildings, roads, sidewalks, paved and unpaved areas. Additionally, all maps will include a coordinate system (e.g., State Plane Coordinate System, New Mexico Central) and the SWMU 183 boundary (HAFB basewide sewer system).

6.3.5 Documentation

Documentation, sample handling, chain-of-custody, and shipping will be managed in accordance with SOP HAFB-1 of the HAFB Basewide QAPP (Bhate, 2003a).

Sampling personnel will use a bound field log book with moisture resistant pages to record pertinent sampling information with waterproof ink in addition to any forms provided in, or specified by applicable SOPs. The log book will identify project name, project number, project manager and telephone number, and principal street address or geographic location of the site. Daily field activities and sampling information will be entered in the log book on dated, initialed, and serially-numbered pages. Corrections will be made to entries by initialed and dated line-out deletions. A diagonal line will be drawn across the remaining blank space of the last page of each day's entry. Each day's entry will be signed and dated by the author.

The date and time of sample preparation, collection, and personnel who conducted sampling will be recorded with the sample identification number in the field log book and on the chain-of-custody form. The names of visitors and any other persons on site will also be recorded in the field log book. Sampling personnel will record the ambient weather conditions and other conditions at the sampling location that may affect sample collection, the apparent representativeness of the sample, or sample analysis.

Sample nomenclature and labeling requirements are described in Section 8.2.1 of this Work Plan.

6.3.6 Decontamination

Sampling equipment will be decontaminated as described in SOP HAFB-2 of the HAFB Basewide QAPP. Equipment to be steam cleaned includes:

- DT325 Dual Tube Sampling System - prior to each borehole
- Hollow Stem Augers and drill rods - prior to each borehole
- DPT drill rig - prior to demobilization or as needed to remove soil, etc.
- CME-85 HSA drill rig - prior to demobilization or as needed to remove soil, etc.

Equipment to be washed with soap and potable water supplied by HAFB includes:

- DT325 System core barrel - prior to each use
- Soil sampling tools (spatulas, spoons etc)
- Stainless Steel Split Spoon sampler(s) - prior to each use

6.3.7 Management of Investigation Derived Waste

IDW will be managed in accordance with SOP HAFB-9 of the HAFB Basewide QAPP. Solid waste such as soil core liners, personal protective equipment (PPE), empty grout bags, and used tubing, etc., will be placed in trash bags and disposed of in dumpsters on site for ultimate disposal as non-hazardous solid waste.

Decontamination and purge waters will be locally contained in a 55-gallon poly drum and conveyed to a 1,000 gallon portable storage tank on a daily basis. The 1,000-gallon portable storage tank will be maintained by NationView until disposal through the HAFB WWTP, pending offsite laboratory analysis of the tank contents. If the laboratory results indicate analyte concentrations below the WWTP acceptance criteria the water can then be transferred to the HAFB WTTP for disposal. Other liquid wastes, such as decontamination rinses will also be conveyed to the 1,000-gallon portable storage tank.

Drill cuttings and excess soils from sampling will be visually assessed for staining and screened with a PID and hand-held scintillation meter. If the cuttings and/or soils are visibly stained or if they have PID headspace readings above background and/or the hand-held scintillation meter indicates the presence of radionuclides, they will be contained and temporarily staged at the FT-31 Landfarm pending receipt of sample analytical results. If analytical results indicate contaminants present at concentrations above the landfarm's acceptance levels, the material will be properly disposed offsite. If the analytical results indicate contaminants present at levels below the landfarm's acceptance levels, the material will be land-farmed. If none of the visual, screening, or analytical results based conditions are met, the material will be used as backfill or spread around borehole locations as described in SOP HAFB-9 of the HAFB Basewide QAPP (Bhate 2003b).

6.4 Sample Analysis

This section describes the data quality objectives and procedures associated with the offsite analytical program. The analytical strategies for the SWMU 183 RFI have been designed to account for all of the COPCs that may have impacted the HAFB basewide sewer system.

6.4.1 Data Quality Objectives

The analytical methods for all soil and groundwater samples outlined in Tables 6-1 through 6-4 and 6-6 through 6-9, respectively, were selected based on their ability to provide reliable and comprehensive results which can be used to determine whether a given contaminant (or contaminant class) is present at concentrations:

- Above reporting limits (RLs),
- Above RLs and below its respective ARAR action level criteria, or
- Above its respective ARAR action level criteria.

In several cases, laboratory method detection limits (MDLs) will be used to compare to ARARs. Concentrations that fall between the practical quantitation limits (PQL) and the MDL will be qualified accordingly.

The selectivity and accuracy of the selected offsite analytical methods have all been adequately proven by virtue of being an accepted USEPA method. The on-site screening methods (headspace PID readings [VOCs] and Ludlum 449 reading [radionuclides]) will only be used to provide real-time data for health and safety purposes. All of the soil and groundwater samples collected for the SWMU 183 RFI will be sent offsite to a NELAP accredited laboratory for analysis by definitive USEPA analytical methods.

Specific DQOs for the offsite laboratory program are described in Section 6.4.2 of this Work Plan. Analytical chemistry data will be reviewed according to latest revision of the USEPA *Contract Laboratory Program National Function Guidelines for Inorganic Data Review* (USEPA, 2004c) and *Contract Laboratory Program National Functional Guidelines for Superfund Organic Methods Data Review* (USEPA, 2008a). One hundred percent (100 %) of the analytical data will be subjected to review modeled after the USEPA Tier I guideline (USEPA Region I, 1996). The Tier I review will include a review of completeness. In addition, as specified by the Project Chemist, the definitive data may also be subjected to review modeled after the USEPA Tier II guideline (USEPA Region I, 1996). This review will compare selected QC parameters (holding time, laboratory control sample [LCS], method blanks, field blanks, surrogates, MS/MSD/laboratory duplicate [LD], and field duplicates) and DQOs with the acceptance criteria described in the HAFB Basewide QAPP (Bhate, 2003a) and the HAFB Basewide QAPP Addendum (in Appendix A of this Work Plan).

Qualifiers may be applied to data that fails to satisfy the acceptance criteria as detailed in the HAFB Basewide QAPP (Bhate, 2003a). Unless otherwise noted, all data validated using the methods noted above will be considered suitable for use in meeting the objectives of this study.

6.4.2 Offsite Laboratory Analytical Methods

Offsite analyses will be completed by the following environmental testing laboratories:

- TestAmerica Laboratories in Denver, Colorado (TAL-DEN)
- TestAmerica Laboratories in St. Louis, Missouri (TAL-STL)

TAL-DEN will be conducting all of the analyses with the exception of the radiochemical analyses, which will be conducted at TAL-STL.

The offsite chemical analysis of soil and groundwater samples will follow the USEPA SW-846 and Department of Energy (DOE) methods listed in Table 6-5 of this Work Plan.

Copies of the following documents have been included in the HAFB Basewide QAPP Addendum in Appendix A of this Work Plan:

- "Self Declaration" statement for the TAL-DEN facility compliance with the U.S. Department of Defense (DOD) Quality Systems Manual (QSM) Version 3 (DOD, 2006) and,
- MDL studies for the analytical methods specified in Table 4-2 of the QAPP Addendum (Appendix A).

SOPs for the offsite analytical methods are not physically included as part of this Work Plan, however, the SOPs have been reviewed and can be made available by the laboratory upon request.

The analytical requirements, including various QA/QC parameters, preparation methods, and analytical methods for soil and groundwater samples are summarized in the HAFB Basewide QAPP (Bhate, 2003a) in:

- Table 3-1 - Project Data Quality Objectives
- Table 10-1 - Sample Containers, Preservatives, and Holding Times
- Table 13-1 - Extraction and Digestion Procedures
- Table 13-2 - Analytical Procedures

The specific analyte lists for each of the analytical suites for soil and groundwater samples are provided in Table 4-2 of the QAPP Addendum (see Appendix A of this Work Plan). The analyte lists are based on Table 5-1 (Comprehensive Analyte and Data Quality Objectives, Groundwater) and Table 5-3 (Comprehensive Analyte and Data Quality Objectives, Soil) of the HAFB Basewide QAPP (Bhate, 2003a).

As noted previously, for several compounds, MDLs will be used to meet the respective ARARs. Where concentrations fall between the PQLs and the MDLs, the data will be qualified accordingly. Exceptions to meeting the ARARs include benzo(a)pyrene and pentachlorophenol which have federal MCLs of 0.2 µg/L and 1.0 µg/L, respectively. TAL-DENs MDLs for these compounds are 0.74 µg/L and 20 µg/L, respectively.

Although the ARAR values for these analytes may prove to be non-applicable to the DQOs for this project because these two compounds are not COPCs that have been detected with the industrial discharges and OWSs associated with SWMU 183.

Samples selected for laboratory analysis will be labeled, handled, and prepared for shipment in accordance with HAFB SOP-1 of the HAFB Basewide QAPP. The PQLs for all analytical parameters and the QA sampling requirements (trip blanks, duplicates, and MS/MSD) are summarized in Table 4-2 of the QAPP Addendum (Appendix A of this Work Plan).

Each cooler containing samples to be shipped for offsite VOC analysis will require a trip blank. The samples will be placed on ice and shipped under strict chain-of-custody to the appropriate laboratory. Specifics regarding the container types, holding times, and preservation chemicals are included in Table 6-5 of this Work Plan.

The offsite laboratories will each provide Level III laboratory deliverables which consist of an analytical report with results and QA/QC summaries. Internal QC results, not included as part of the Level III package, will be retained on file at each of the offsite laboratories.

Results for all samples will be presented in hard copy Form-1 and electronic data deliverable (EDD) formats. Electronic data shall be delivered in an appropriate format such that the data can be uploaded to the project database for subsequent manipulation and presentation.

Standard turn-around (TAT) times of 2 weeks will be expected for all organic and inorganic results and 3-weeks for the radiochemical results; except for special conditions wherein expedited analyses may be required.

This page intentionally left blank.

7 RISK ASSESSMENT APPROACH

The primary objective of Phase I for this RFI is to; identify potential releases from the HAFB basewide sewer system to soil at 52 pre-designated locations (shown on Plates 1 and 2). If the results of any soil sample analysis exceed the ARARs specified in Section 6.2.1.1 of this Work Plan, a Phase II investigation (Groundwater Sampling) will be implemented and a permanent monitoring well will be installed immediately downgradient from the corresponding DPT soil boring location. The primary objective of Phase II is to determine if the groundwater quality has been impacted at locations where soil contamination has been identified during the Phase I investigation. A second objective of the Phase II investigation is to characterize the vertical extent of soil contamination with the collection of an additional soil sample from the capillary fringe (or the saturated zone) from each monitoring well borehole. The collection of soil and groundwater samples will provide the sufficient analytical data to support a site-specific risk assessment of the exposure pathways present for both human and non-human receptors. Data collected during this RFI will be evaluated based upon the DQOs for the project. If the completed evaluation indicates an acceptable risk, the site can be considered for closure with no further action. The risk assessment methodology consists of the following elements:

1. Compilation of data;
2. Identification of COPCs;
3. Development of exposure model (EM);
4. Identification of target levels;
5. Calculation of representative concentrations; and
6. Comparison of representative concentrations with target levels.

Each of these steps is generally described below.

7.1 Evaluation of COPCs

All COPCs (VOCs, SVOCs, TAL metals, TPH, PCBs, nitrate, sulfate, chloride, herbicides, pesticides, perchlorate, and radionuclides [carbon-14, tritium, radium 226, and radium 228]) that are detected in the soil and groundwater samples collected during this RFI (Phases I and II) will be compared to the analyte specific ARARs that are presented in Section 6.2.1 of this Work Plan. Furthermore, all inorganic constituents (e.g., TAL metals and radionuclides) detected in the soil samples will be compared to HAFB Background, Composite Soil, UTLs (pending NMED approval of the *Basewide Background Study Report, Holloman Air Force Base, New Mexico* [NationView|Bhate JV III, 2009]). Additionally, all inorganic constituents (e.g., TAL metals, nitrate, sulfate, chloride, and radionuclides) detected in the groundwater samples will be compared to the HAFB Background, Dissolved Metals, Groundwater UTLs (pending NMED approval

of the *Basewide Background Study Report, Holloman Air Force Base, New Mexico* [NationView|Bhate JV III, 2009]).

7.2 Risk Based Evaluation

Subsequent to the investigative activities detailed in this Work Plan, a risk based evaluation will be performed to ensure that the risks to future receptors are acceptable at SWMU 183. The risk based evaluation will be included in the submittal of the SWMU 183 RFI Completion Report. The following sections present the various steps that will be included in the risk evaluation.

7.2.1 Review of Available Analytical Data

As a first step in the risk evaluation process, soil and groundwater data produced by this RFI will be combined with useable historical data (if available). The data will then be reviewed to determine (i) the most probable source(s) of contamination, (ii) that soil and groundwater impacts have been adequately delineated, and (iii) if any additional contaminants were detected that were not previously of concern at the site. Additionally, the data will be evaluated to ensure it meets standards for data quality established in the NMED *Technical Background Document for Development of Soil Screening Levels, Revision 5.0* (NMED, 2009).

7.2.2 Revision of the Conceptual Site Model

Following a review of SWMU 183 RFI data, the CSM may need to be revised. This includes (i) re-assessing the distribution of COCs in soil and groundwater, (ii) verifying current and future land use, and (iii) verifying site stratigraphy and hydrogeology. To date, COPCs discharged to the HAFB basewide sewer system include: VOCs, SVOCs, TPH, PCBs, metals, herbicides, pesticides, perchlorate, radionuclides [carbon-14, tritium, radium 226 and 228], nitrate, sulfate, and chloride. As discussed in the initial CSM (Section 5), there are currently three areas of the HAFB sewer system where suspected releases have occurred due to reported breaks in the sewer line (shown on Plates 1 and 2). Suspected sewage release areas number 1 and 2 are located in sub-basins 8 and 9 and are downgradient of the former Primate Research Area and current Primate Research Areas respectively (Plate 1). Small quantities of carbon-14 and tritium tracers and solvents may have entered the sewer lines at either Primate Research Area or are suspected to have leaked into the subsurface at the two collapsed locations. Therefore, radionuclide analyses (carbon-14, tritium, radium 226 and 228) have been added to the suite of analytical parameters for these two sub-basins. As shown on Plate 1 DPT boreholes will be advanced within both of these suspected sewer release areas.

Additionally, a third sewer break reportedly occurred within the central portion of sub-basin 5 (Plate 2). It is unknown what specific COPCs may have been discharged from this break; however a DPT borehole will be installed immediately within the area of this previously collapsed section of sewer line. The SWMU 183 RFI will determine if a release to the subsurface has occurred and if the subsurface in the vicinity of the HAFB basewide sewer system has been impacted.

7.2.3 Development of the Exposure Model

Once the conceptual site model has been refined, an exposure model will be developed. The exposure model is based on the CSM, and identifies the following:

- Media of concern,
- Current and future receptors, and
- Complete and incomplete exposure pathways.

The media of concern includes surficial soil, subsurface soil, soil to depth of construction, and groundwater. Based on current information available for SWMU 183, receptors include (i) a current and future commercial/industrial worker, (ii) a future resident, and (iii) a future construction worker. Complete routes of exposure for each media of concern/COC/receptor combination will be identified based on the above information.

7.2.4 Preliminary Screening Evaluation

As a first step, maximum concentrations for each COC in soil will be compared with the specific ARARs described in Section 6.2.1.1 of this Work Plan. Likewise, the maximum concentrations for each COC in groundwater will be compared with the specific ARARs presented in Section 6.2.1.2 of this Work Plan. If the maximum concentration of each COC in soil and groundwater is below its respective ARAR, no additional analysis will be performed, and the findings will be reported to NMED. Depending on the results of the preliminary screening evaluation, site-specific screening levels may be developed for all complete routes of exposure identified in the exposure model. Development of site-specific screening levels is described below.

7.2.5 Calculation of Site-Specific SSLs

Parameters required for the calculation of site-specific SSLs include:

- Carcinogenic toxicity values (Slope Factors),
- Non-carcinogenic toxicity values (Reference Doses),
- Exposure Factors, and
- Fate and Transport Parameters.

Default toxicity values and exposure factors will be obtained from Tables C-1 and B-1 (respectively) of the *Technical Background Document for Development of Soil Screening Levels, Revision 5.0* (NMED, 2009). As described in Section 6.3.2.1 site-specific fate and transport parameters (geotechnical data) will be obtained from previous collected geotechnical data at eight sites during the 2007 Multiple Sites ACM investigation (geotechnical data included in Appendix B of this Work Plan). Using the above information, site-specific screening levels will be calculated using equations presented in the *Technical Background Document for Development of Soil Screening Levels, Revision 5.0* (NMED, 2009). The maximum detected concentration for each contaminant that is detected above the reporting limit will be used to determine the site hazard index (HI). All constituents which have an HI greater than 1 will be evaluated in the site specific risk assessment.

7.2.6 Site-Specific Screening Level Evaluation

The site-specific screening levels will be compared with the representative concentration of each COC in each media of concern. If any COC exceeds its respective site-specific screening level, target levels for the COC will be developed during the risk-based evaluation. The Johnson & Ettinger (J&E) model (USEPA, 2004a) will be used to develop the target levels for the indoor inhalation of vapors from subsurface soil and groundwater. The use of the J&E model is required because the NMED *Technical Background Document for Development of Soil Screening Levels* (NMED, 2009) does not have an indoor inhalation pathway. Additionally, target levels for dermal contact with soil and groundwater will be developed as per the *Risk Assessment Guidance for Superfund Volume I, Part E Supplemental Guidance for Dermal Risk Assessment* (USEPA, 2004b).

8 DATA MANAGEMENT PLAN

This section describes the overall data management strategy and plan for the SWMU 183 RFI.

8.1 Data Management System and Strategy

The data management plan will be used to accommodate and manage fixed-based laboratory generated data at a standard TAT of two weeks. Data to be generated includes chemical analytical data, as well as spatial and features information, hydrogeologic data, and various supporting data, such as photographs and standard daily forms information. The data management system is comprised of a central project database.

8.2 Data Type

Analytical data will be generated entirely by offsite analysis conducted by a NELAP accredited laboratory. Analytical data generated by offsite laboratory will be initially managed by the laboratory information management system (LIMS) and transferred to the project team for use via EDD and hard copy. Prior to project startup, formats for the offsite laboratory EDDs will be final approved to ensure smooth transfer and importation of the data into the central project database upon receipt.

Upon project completion, the data management system will be used to perform the final spatial analysis, as well as to support tabular and graphic report development for deliverables and miscellaneous project communications as needed.

8.2.1 Sample Identification System

Each environmental, geotechnical, and QA/QC sample collected will be identified on the sample label and chain-of-custody records, regardless of type. Sample documentation, handling, and shipping will be in accordance with HAFB SOP-1. Table 6-5 provides the sample collection information inclusive of the container type, holding time, and quantity for the soil and groundwater samples collected during the investigation at SWMU 183. The field duplicate samples will appear in sequence with the other samples. The sample nomenclature for soil samples collected from DPT boreholes during the Phase I investigation will be as follows:

SWMU183-DP01-8-a

Site alpha-numeric identifier: SWMU183 = Solid Waste Management Unit 183

Sample type identifier: DP = direct push boring

Sequential direct push boring number: 01, 02, etc.

Ending depth of sample interval (ft bgs): 8

Reserved for QA sample identifiers: a = field duplicate, TB = trip blank, MS = matrix spike, MSD = matrix spike duplicate

In the event that the Phase II Groundwater Investigation is required, monitoring well boreholes will be advanced with a HSA drill rig. The sample nomenclature for soil samples collected from HSA boreholes will be as follows:

SWMU183-SB01-16-a

Site alpha-numeric identifier: SWMU183 = Solid Waste Management Unit 183

Sample type identifier: SB = HSA soil boring

Sequential direct push boring number: 01, 02, etc.

Ending depth of sample interval (ft bgs): 16

Reserved for QA sample identifiers: a = field duplicate, TB = trip blank, MS = matrix spike, MSD = matrix spike duplicate

In the event that the Phase II Groundwater Investigation is required, permanent monitoring wells will be installed. The sample identification nomenclature for groundwater samples collected from new monitoring wells will be as follows:

SWMU183-MW01-a

Site alpha-numeric identifier: SWMU183 = Solid Waste Management Unit 183

Sample type identifier: MW = monitoring well

Sequential monitoring well number: 01, 02, etc.

Reserved for QA sample identifiers: a = field duplicate, TB = trip blank, MS = matrix spike, MSD = matrix spike duplicate

8.2.2 Data Recording

The following paragraphs describe the data recording activities that will be performed for field data, offsite laboratory analytical data, and photographs.

8.2.2.1 Field Data

All information pertinent to a field sampling event will be recorded on appropriate data sheets, or in the project field logbook as described Section 10.5 of the HAFB Basewide QAPP (Bhate, 2003a). Specific data sheets are required by certain SOPs. Samplers use a bound field logbook with consecutively numbered pages. Entries in the logbook will be made using indelible ink and will include at a minimum the following information:

- Name and address of the field contact (on logbook cover),
- Date of entry,

- Names and companies of personnel on site,
- General descriptions of each day's field activities,
- Documentation of weather conditions during field activities,
- Location of sampling (e.g., soil boring and/or monitoring well),
- Data points for field equipment derived during calibration procedures,
- Observation of sample or collection environment,
- Identification of sampling device,
- Any field measurements made,
- Sequence of collection of environmental samples,
- Type of sample matrix (e.g., vapor, groundwater, etc.),
- Date and time of environmental sample collection,
- Field sample identification number,
- Sample distribution (e.g., which laboratory shipped to for analysis),
- Sampler's name,
- Sample type (e.g., composite, normal, duplicate, other QC, etc.),
- For groundwater samples, which samples were filtered and filter size and type, and
- Preservative used, if applicable, for the environmental sample.

If an error is made on the document or in the logbook, corrections will be made simply by crossing a line through the error in such a manner that the original entry can still be read, and the correct information added as the change. All corrections will be initialed by the author and dated.

Each page in the logbook will be signed or initialed by the person making the entries. In addition to the information entered into the logbook, the appropriate data forms must be filled out as each activity is completed.

8.2.2.2 Offsite Laboratory Analytical Data

The offsite laboratory shall maintain electronic and hardcopy records sufficient to recreate each analytical event conducted. The minimum records the laboratory shall keep include the following:

- Chain-of-custody forms,
- Initial and continuing calibration records including standards preparation traceable to the original material and lot number,
- Instrument tuning records (as applicable),
- Method blank results,
- Internal standard results,
- Surrogate spiking records and results (as applicable),
- Spike and spike duplicate records and results,
- Laboratory records,

- Raw data, including instrument printouts, bench work sheets, and/or chromatograms with compound identification and quantitation reports,
- Corrective action reports,
- Other method and project required QC samples and results, and
- Laboratory-specific written SOPs for each analytical method and QA/QC function in place at the time of project sample analysis.

8.2.2.3 Photographs

Any photographic documentation will be recorded in the appropriate logbook. Information to be recorded includes:

- Camera make and model,
- Time and date,
- Photographer,
- Details for the location of the photograph,
- Direction of photograph, preferably measured with field compass,
- Subject of the photograph,
- Significant or relevant features, and
- Names of any personnel included in photograph.

8.3 Data Reporting

Data obtained during drilling activities will be reported according to the Basewide QAPP (Bhate, 2003a). In accordance with the USACE *Chemical Quality Assurance for HTRW Projects Manual* EM 200-1-6, October 1997, the investigative data is classified as definitive data. The data will be generated using rigorous, analyte-specific analytical methods where analyte identifiers and quantitations are confirmed and QA/QC requirements have been satisfied. For this project, regular, field duplicate, and MS/MSD samples are to be collected concurrently. The data will meet the objectives of the project for level of accuracy and precision required, intended use of the data, analytical methods, time constraints, and allowable decision errors. Risk evaluation and sampling results will be tabulated and summarized in the RFI report for the site. An Environmental Restoration Program Information Management System (ERPIMS) submittal is not required for this investigation of the HAFB Basewide sewer system (SWMU 183). Project data will generally be reported in tabular and/or graphical display as described below.

8.3.1 Tabular Displays

All analytical chemistry data will be presented as either Form 1 reports and/or summary reports. The Form 1 analytical reports will contain the following:

- Laboratory Name, address, telephone number, contact person, and location where the test was carried out if different from the fixed laboratory address,
- Unique Laboratory Project Number,
- Total number of pages (report must be paginated),
- Client Project Number (if applicable),
- Laboratory Sample Identification (if applicable),
- Client Sample Identification,
- Test Method,
- Matrix and/or description of sample,
- Dates: sample collection, collection time, sample receipt, preparation, and/or analysis date,
- Definition of data qualifiers,
- Reporting units,
- Solid samples: indicate dry or wet weight, and
- Indication by flagging where results are reported below the quantitation limit.

Offsite laboratories shall provide data deliverables within the standard or expedited times specified. Analytical results for all samples will be presented in hard copy Form-1 and EDD formats. Electronic data shall be delivered in an appropriate format such that the data can be uploaded to the project database for subsequent manipulation and presentation.

Tabular summary reports listing of non-chemical, field measurement data (e.g., monitoring well development, monitoring well sampling, and water level data) will also be generated as part of this project. These summary reports will be created on an as-needed basis to support field sampling efforts and/or final project reporting.

8.3.2 Graphical Displays

During the field effort, Plates 1 and 2 will be used by the field teams to guide their sampling activities. Staff will hand-annotate these maps for interim documentation of notable spatial information, such as:

- Indicating which locations have been sampled,
- Documenting in-field sample location adjustments,
- Documenting unique information learned in the field about the construction of the HAFB sewer system, sewer conditions differing from expectations, system anomalies, surrounding features of note, and any new knowledge of potential release locations.

Administrators will perform data input and changes, as well as work with the report development team to generate requested graphical and tabular reporting documents. Creation of presentation quality maps, as well as complex map layouts, and other complex displays, analysis, and processing of spatial data, will be performed using

desktop Geographic Information System (GIS) software (such as Environmental Systems Research Institute's [ESRI's] ArcGIS program suite). The desktop GIS software will be used to produce maps intended for use in reports, as well as all plate-sized map prints.

8.4 Data Archiving

Hardcopy and electronic data shall be archived in project files and on electronic archive media for the duration of the project and for a minimum of 5 years, whichever is longer.

9 HEALTH AND SAFETY REQUIREMENTS

Project Health and Safety practices will adhere to the *Basewide Health and Safety Plan* (Bhate, 2003b) and the Site Specific Addendum to the Basewide HASP, as included in Appendix D of this Work Plan for investigation activities. All work must be conducted in accordance with the USACE *Safety and Health Requirements Manual, EM 385-1-1*, 15 September 2008. It is anticipated that no greater than level D PPE will be required to complete the site sampling activities. This includes: Occupational Safety and Health Administration (OSHA) approved safety shoes, American National Standards Institute (ANSI) approved safety glasses (Z87.1) and hard hat (Z89.1-1997: Type I), sleeved shirt and long pants, and as required, hearing protection, leather work gloves, and/or nitrile gloves during sampling.

Site security is part of safety at the site for the investigation. Items of concern include the proper designation and demarcation of the investigation boundaries (i.e., Support Zone, Contaminant Reduction Zone, and Exclusion Zone) as appropriate. Likewise, compliance with any intrusive work requirements, posting of potential hazards, and control of un-authorized site personnel will be completed. This is discussed in the Basewide HASP (Bhate, 2003b).

At a minimum, the site will be secured with caution tape surrounding the perimeter of the site delineating the outer boundary of the Support Zone. This is essential in the utility clearance process and it will serve as the demarcation of the site for both project and non-project persons. A Contaminant Reduction Zone and/or Exclusion Zone will be established as guided by the HASP and site prevailing conditions.

This page intentionally left blank.

10 PROJECT MANAGEMENT PLAN AND SCHEDULE OF IMPLEMENTATION

This section presents the PMP to be used during the performance of the SWMU 183 RFI.

10.1 Management Control Structure

The management control structure for the project is based on providing Best Management Practices (BMPs) as developed through years of service and integrated project delivery by the organizations charged with performing this project. Key Project personnel and their responsibilities are listed in Table 10-1. The SWMU 183 RFI Phase I field activities are anticipated to begin during the winter of 2009-2010.

The following bullets describe the basic management control relationships and key attributes of each organization.

- Regulatory: The NMED Hazardous Waste Bureau is the lead regulatory agency for the project.

- Command: The Air Force Center for Engineering and the Environment (AFCEE) is responsible for the management of environmental activities at all United States Air Force Bases. AFCEE delegates the execution of environmental projects to various Department of Defense service agencies. In the case of HAFB, the designated service agency for the SWMU 183 RFI is the USACE Albuquerque District. Mr. Layi Oyelowo will serve as the AFCEE Program Manager for the project.

- Base: The 49th CES/CEA is responsible for the management of all HAFB environmental activities. Mr. David Scruggs will serve as the official Point of Contact for formal communications with NMED.

- Service Agency: USACE Albuquerque District will provide environmental program management, technical, and contractor management and oversight services to the AFCEE. The Albuquerque District contracts with private contractors to perform projects and maintains a robust quality management process with which contractors must comply to ensure its customers are being properly served. Ms Carol Wies will serve as Service Program Manager for the project; supported by dedicated project resources in the areas of geology, chemistry, health and safety, and risk assessment.

- Prime Contractor: As Prime Contractor, NationView maintains project management processes and systems to support the execution of its projects, with specific elements of those processes tailored to comply with general federal requirements, and USACE Albuquerque District's specific requirements. Further, NationView is currently performing a number of other environmental projects at HAFB and, therefore, has a solid understanding of the requirements for performing work at HAFB and relationships with key individuals and departments to facilitate the various logistical actions required to perform projects efficiently and in compliance with HAFB requirements.

  Mr. David Martin will serve as the NationView Corporate Sponsor and Mr. Frank Gardner will serve as Prime Contractor Program Manager for the project. Mr. Jim Moore will serve as Project Manager; supported by project resources in the areas of field team leadership, geology, engineering, chemistry, health and safety, and quality assurance.

- General Support Subcontractors: NationView has processes and systems in place to procure and manage the services of general contractors, such as drillers, laboratories, surveyors, waste management firms, and other providers as deemed necessary to perform its projects. All General Support Subcontractors will be contracted with, and report directly to, NationView for the SWMU 183 RFI project.

10.2 Reporting

A variety of reporting mechanisms will be utilized throughout the SWMU 183 RFI to facilitate communication between HAFB, USACE, NMED, and NationView. These reporting mechanisms will include the standard daily quality control and monthly progress reports outlined in the HAFB Basewide QAPP, as well as the Draft and Final SWMU 183 RFI Reports. Each of these reports will be instrumental in maintaining and documenting the continuing communication between various entities involved in the project.

A Draft SWMU 183 RFI Report will be prepared and undergo a series of internal reviews by subcontractor and prime contractor prior to submission to the 49th CES/CEA and the USACE Albuquerque District, as the agency service provider, prior to revision and submission to NMED Hazardous Waste Bureau for review. Upon receipt of NMED comments, the Draft SWMU 183 RFI Report will be revised to the Final format accordingly. As needed, a meeting may be requested to address any issues of significance that are not readily resolved through standard revision-level processes. NationView will be responsible for resolving any issues that rise to that level of discourse.

Specifically, the SWMU 183 RFI Report(s) will include the following elements:

- Introduction
- Environmental Setting
- Source Characterization [(1)]
- Sampling and Analysis Results
- Data Quality Assurance/Data Quality Control Review
- Conclusions
- Recommendations
- Work Plan for Additional Investigations (as determined needed)

[(1)] Due to the size and complexity of the SWMU 183 sewer systems, any confirmed, and subsequently delineated, release areas will be considered separate 'sites' for the purposes of reporting. This will also simplify any subsequent management effort required to process those areas to No Further Action closure as independent sites (or sub-sites).

10.3 Records Management

Project files will contain the following information:

- Correspondence
    a. – External and internal correspondence
    b. – Notes/minutes of meetings and phone conversations
    c. – Personnel, organization, and responsibilities
    d. – Planning and scheduling
    e. – QA auditing and inspection reports
- All Field Generated Data
- Contractual Documentation
    a. Prime Contract
    b. Delivery Orders / Task Orders
    c. Change Orders
    d. Subcontracts
    e. Competitive bid evaluations
- Laboratory Analytical Data
- Submittals/Reports
- Miscellaneous project information as required

Project files will be maintained by Project Management and Quality Assurance personnel, as supported by designated document control personnel.

11 REFERENCES

American Society for Testing and Materials (ASTM). May 2006a. *ASTM D 2487-92 Standard Practice for Classification of Soils for Engineering Purposes (Unified Soil Classification System).*

ASTM. November 2006b. *ASTM D 2488-90 Standard Practice for Description and Identification of Soils (Visual-Manual Procedure).*

Associated Press. 2006. *Groups File Suit Over Endangered Falcon Protections*.

Bhate Environmental Associates, Inc. (Bhate). August 2002. *Bhate Standard Operating Procedures (BSOPs) Field Procedures 1 -13.*

Bhate. November 2003a. *Final Basewide Quality Assurance Project Plan, Holloman Air Force Base, New Mexico*.

Bhate. December 2003b. *Final Basewide Health and Safety Plan, Holloman Air Force Base, Alamogordo, New Mexico*.

Bhate. January 2006. *Final Environmental Assessment, Wastewater Utility System Privatization, Holloman Air Force Base, New Mexico*.

Bhate. May 2007. *Final Accelerated Corrective Measures Work Plan, Multiple Sites, Holloman AFB, New Mexico.*

Ecology and Environment, Inc. January 1998. *Industrial Wastewater Pretreatment Study, Revised Phase I Draft Report, Holloman Air Force Base, New Mexico*.

EBASCO Services, Inc., and Groundwater Technology Government Services, Inc. November 1995. *Closure Report for Remediation of POL – Contaminated Sites and Oil/Water Separator Removals, Holloman Air Force Base, New Mexico.*

Foster Wheeler Environmental Corp. (FWENC) and Radian Corporation. April 1995a. *Phase II RCRA Facility Investigation Work Plan; Air Base Sewer System. Revision 0*.

FWENC and Radian Corporation. July 1995b. Draft Final *RFI Report, Table 3 RCRA Facility Investigation, Holloman Air Force Base, New Mexico.*

FWENC. July 1997. *Final Closure Report for Phase II Remediation of POL-Contaminated Sites and Oil/Water Separator and Waste Oil Tank Removals, Holloman Air Force Base, New Mexico*.

FWENC. December 1997. *Final Closure Report Addendum for Phase II Remediation of POL-Contaminated Sites and Oil/Water Separator and Waste Oil Tank Removals, Holloman Air Force Base, New Mexico*.

Freehling, M., K. Johnson, and L. DeLay. September 9, 1999. *Shorebird foraging and invertebrate occurrence at the Holloman Wetlands, Holloman Air Force Base, 1996-1998*. New Mexico Natural Heritage Program, Biology Department, University of New Mexico.

Frey, J. K. and T. L. Yates. 1996. *Mammalian Diversity in New Mexico*. New Mexico Journal of Science, Vol. 36: 4-37.

Holloman Air Force Base. 2001. *Integrated Natural Resource Management Plan: Holloman Air Force Base, New Mexico*.

Johnson, K., K. Score, S. Berckman, J.S. Altenbach, and P. Mehlhop. November 7, 1997a. *A survey of biological resources at the Cinetheodolite Missile Towers on Holloman Air Force Base and White Sands Missile Range, New Mexico*. New Mexico Natural Heritage Program, Biology Department, University of New Mexico, Albuquerque, New Mexico.

Johnson, K., L. DeLay, P. Mehlhop, and K. Score. July 31, 1997b. *Distribution, Habitat, and Reproductive Success of Burrowing Owls on Holloman Air Force Base, New Mexico*. New Mexico Natural Heritage Program, Biology Department, University of New Mexico.

Mehlhop, P., N.M. Runyan, E. DeBruin, J.M. Brown-Ellington, and E. Milford. 1998. *Sensitive Species Management Plans for Holloman Air Force Base*.

NationView|Bhate JV III, 2009. *Basewide Background Study, Holloman Air Force Base, New Mexico.*

New Mexico Administrative Code (NMAC) 19.33.6. November 30, 2000. *List of Threatened and Endangered Species*. (http://www.nmcpr.state.nm.us/nmac/parts/title19/19.033.0006.pdf).

NMAC 20.6.2. September 15, 2002. *Environmental Protection Water Quality Ground and Surface Water Protection.*

New Mexico Environment Department (NMED). February 2004a. Appendix 4-B: RCRA Facility Investigation (RFI) Outline, Holloman Air Force Base, Hazardous Waste Facility Permit No. NM6572124422.

NMED. February 2004b. Appendix 4-F: *Action Levels and Cleanup Levels,* Holloman Air Force Base, Hazardous Waste Facility Permit No. NM6572124422.

NMED. September 2005. Appendix 4-A: Summary of Solid Waste Management Units (Table A and Table B), Holloman Air Force Base, Hazardous Waste Facility Permit No. NM6572124422.

NMED. October 2006. *New Mexico Environment Department TPH Screening Guidelines*.

NMED. August 2009. *New Mexico Environment Department Technical Background Document for Development of Soil Screening Levels, Revision 5.0*.

New Mexico Water Rights Reporting System (NMWRRS) database, June 2009. (http://nmwrrs.ose.state.nm.us/WRDispatcher?page=meterDrillerSelection)

Pittenger, J.S. and C.L. Springer. 1999. *Native Range and Conservation of the White Sands Pupfish (Cyprindon tularosa).* Southwestern Naturalist 44(2):157-165.

Radian Corporation. November 1993. *Draft Holloman Risk Assessments: Sewage Lagoons and Lakes Investigation, Volume – Report*.

Radian Corporation, October 1994. Draft Final *Phase I RCRA Facility Investigation Report, Table 2 Solid Waste Management Units, Holloman Air Force Base, New Mexico.*

Radian International, LLC. August 1998. *Final Infiltration and Inflow Study Report, Volume I, Holloman Air Force Base.*

Root, J. and S. Demarais. 1997. Small Mammal Projects Conducted on Holloman Air Force Base.

Stone Environmental, Inc. May 2008. *Final Triad Approach Dynamic Work Plan RCRA Facility Investigation SWMU 183 – Basewide Sewer System, Holloman AFB, New Mexico.*

Suminski, R.R. 1977. *Life History of the White Sands Pupfish and Distribution of Cyprinodon in New Mexico*.

The Nature Conservancy. 2007. *The Unlucky 13 Grassland Birds.* www.nature.org.

The Owl Pages. 2005. www.theowlpages.com.

Turner, P.R. 1987. *Ecology and Management Needs of the White Sands Pupfish in the Tularosa Basin of New Mexico*.

United States Air Force. 1996. *Delineations of Jurisdictional Waters of the United States and Wetlands on Holloman Air Force Base, New Mexico*.

U.S. Army Corps of Engineers. October 10, 1997. *Chemical Quality Assurance for HTRW Projects Manual* EM 200-1-6.

U.S. Army Corps of Engineers. January 2001. *Holloman Air Force Base Integrated Natural Resource Management Plan.*

U.S. Army Corps of Engineers. September 15, 2008. *Safety and Health Requirements Manual, EM 385-1-1*.

United States Department of Agriculture (USDA). 1981. *Soil Survey of Otero Area, New Mexico: Parts of Otero, Eddy, and Chaves Counties.*

United States Department of Defense. January 2006. *Quality Systems Manual for Environmental Laboratories*, Version 3.

United States Department of Interior, U.S. Fish and Wildlife Service. 1996. Endangered and threatened wildlife and plants 50 Code of Federal Regulations (CFR) §17.11 and §17.12.

United States Environmental Protection Agency (USEPA). November 1986. *Guidelines for Ground-water Classification Under the EPA Ground-water Protection Strategy.*

USEPA. 1995. *Drinking Water Regulations and Health Advisories.*

USEPA-New England Region I. December 1996. *Data Validation Functional Guidelines for evaluating Environmental Analyses.*

USEPA. October 2000. *Soil Screening Guidance for Radionuclides: Technical Background Document* (EPA/540-R-00-006).

USEPA. February 2004a. *User's Guide for Evaluating Subsurface Vapor Intrusion into Buildings.*

USEPA. July 2004b. *Risk Assessment Guidance for Superfund Volume I, Part E Supplemental Guidance for Dermal Risk Assessment*.

USEPA. October 2004c. *Contract Laboratory Program National Functional Guidelines for Inorganic Data Review.*

USEPA. June 2008a. *Contract Laboratory Program National Functional Guidelines for Superfund Organic Methods Data Review* (USEPA-540-R-08-01).

USEPA. December 2008b. Interim Drinking Water Health Advisory for Perchlorate. (http://www.epa.gov/safewater/contaminants/unregulated/perchlorate.html).

USEPA. April 2009a. *USEPA Regions 3, 6, and 9 Regional Screening Levels.* (http://www.epa.gov/Region6/6pd/rcra_c/pd-n/screen.htm)

USEPA. May 2009b. *National Primary Drinking Water Regulations* (EPA 816-F-09-004).

U.S. Government Printing Office. 1990. *Federal Register*, Proposed Subpart S Rules, Volume 55, No. 145. Washington, D.C.

Western Regional Climate Center [WRCC]. 2003. (http://www.wrcc.dri.edu/).

Additional documents reviewed but not cited:

CH2MHill, 1983. *Installation Restoration Program Records Search for Holloman Air Force Base, New Mexico*.

Dames & Moore, 1984. *Presurvey Report, IRP Program, Phase IIa, Holloman Air Force Base, New Mexico*.

Walk, Haydel & Associates, Inc., December 1989*. Installation Restoration Program, Final Remedial Investigation Report, Holloman Air Force Base, New Mexico, Volume 1.*

This page intentionally left blank.

FIGURES

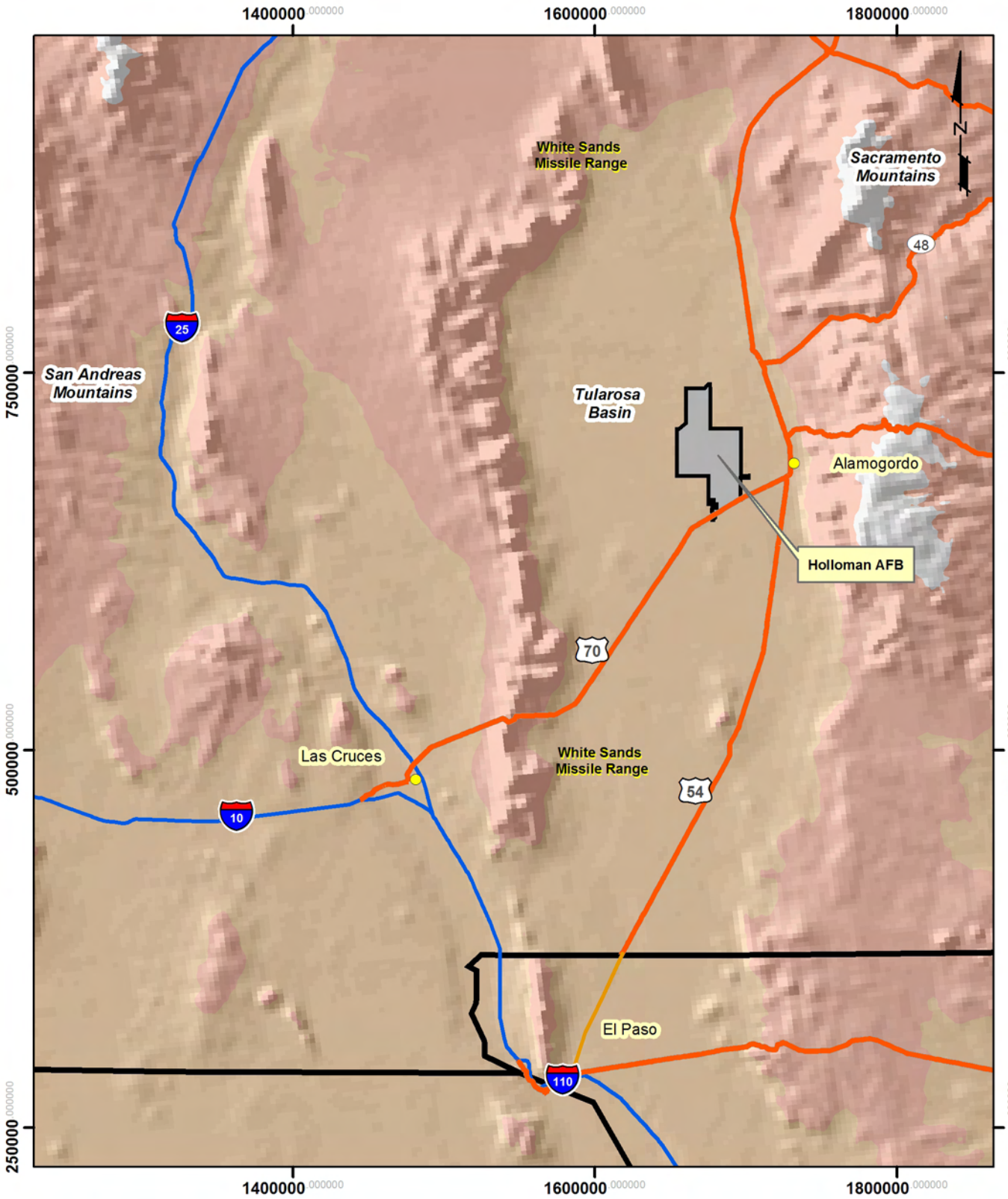

Projection: New Mexico State Plane Central Zone, North American Datum 1983 (Feet)

NATIONVIEW

Holloman AFB, New Mexico Location Map

PROJECT NO.	SCALE	DATE	DRAWN BY:
8080014	1"=18 Miles	7/29/09	cm
			DRAWING NO: Figure 1-1

SWMU 183
Basewide Sewer System
RCRA Facility Investigation Work Plan
Holloman AFB, New Mexico

Figure 1-1

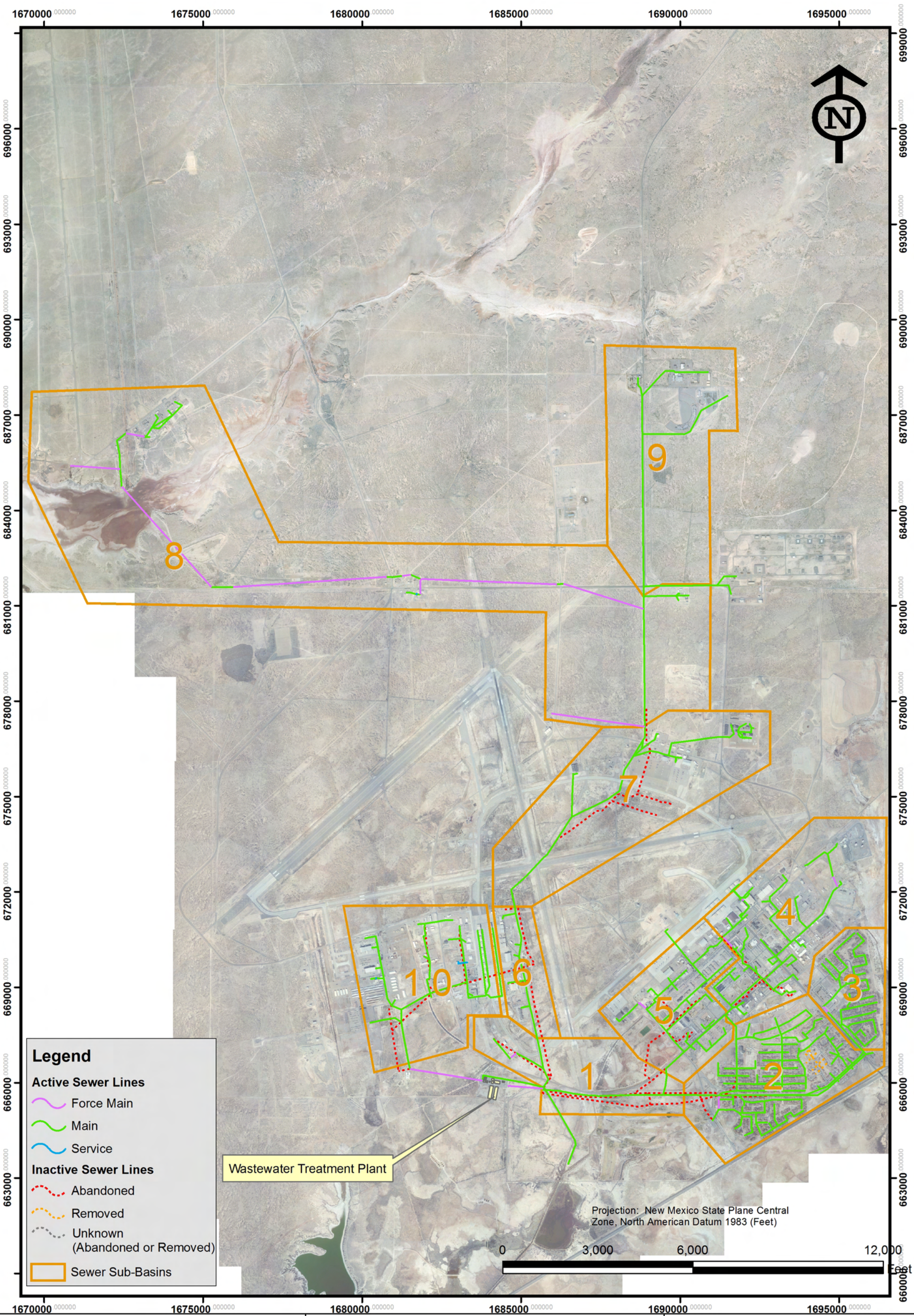

NATIONVIEW

SWMU 183
Site Location Map

PROJECT NO.	SCALE	DATE	DRAWN BY:
8080014	Shown	8/13/09	cm
			DRAWING NO: fig_1-2

SWMU 183
Basewide Sewer System
RCRA Facility Investigation Work Plan
Holloman AFB, New Mexico

Figure 1-2

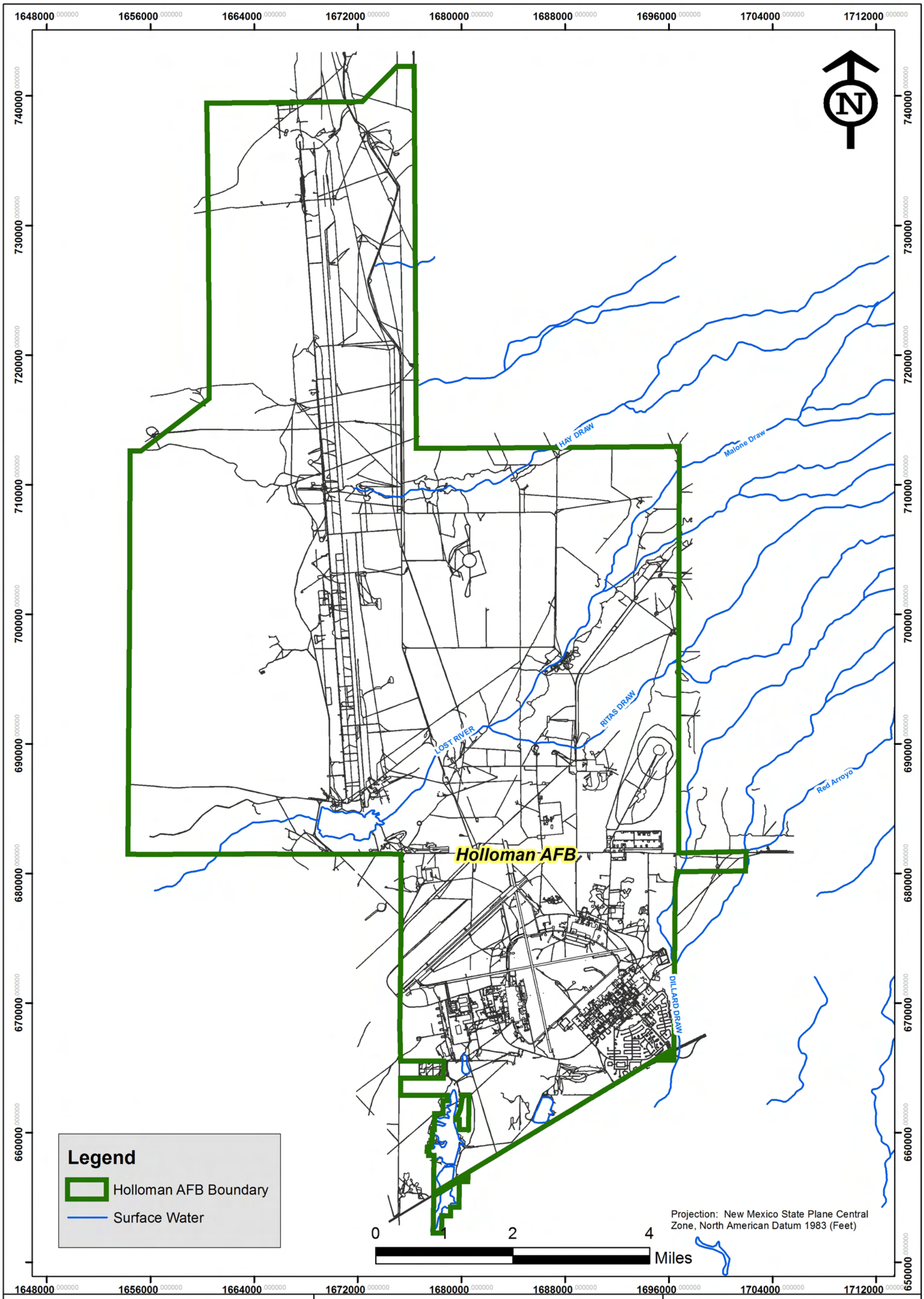

NATIONVIEW

Surface Drainages Holloman AFB

PROJECT NO.	SCALE	DATE	DRAWN BY:
8080014	Shown	6/10/09	cm
			DRAWING NO: fig_2-1

SWMU 183
Basewide Sewer System
RCRA Facility Investigation Work Plan
Holloman AFB, New Mexico

Figure 2-1

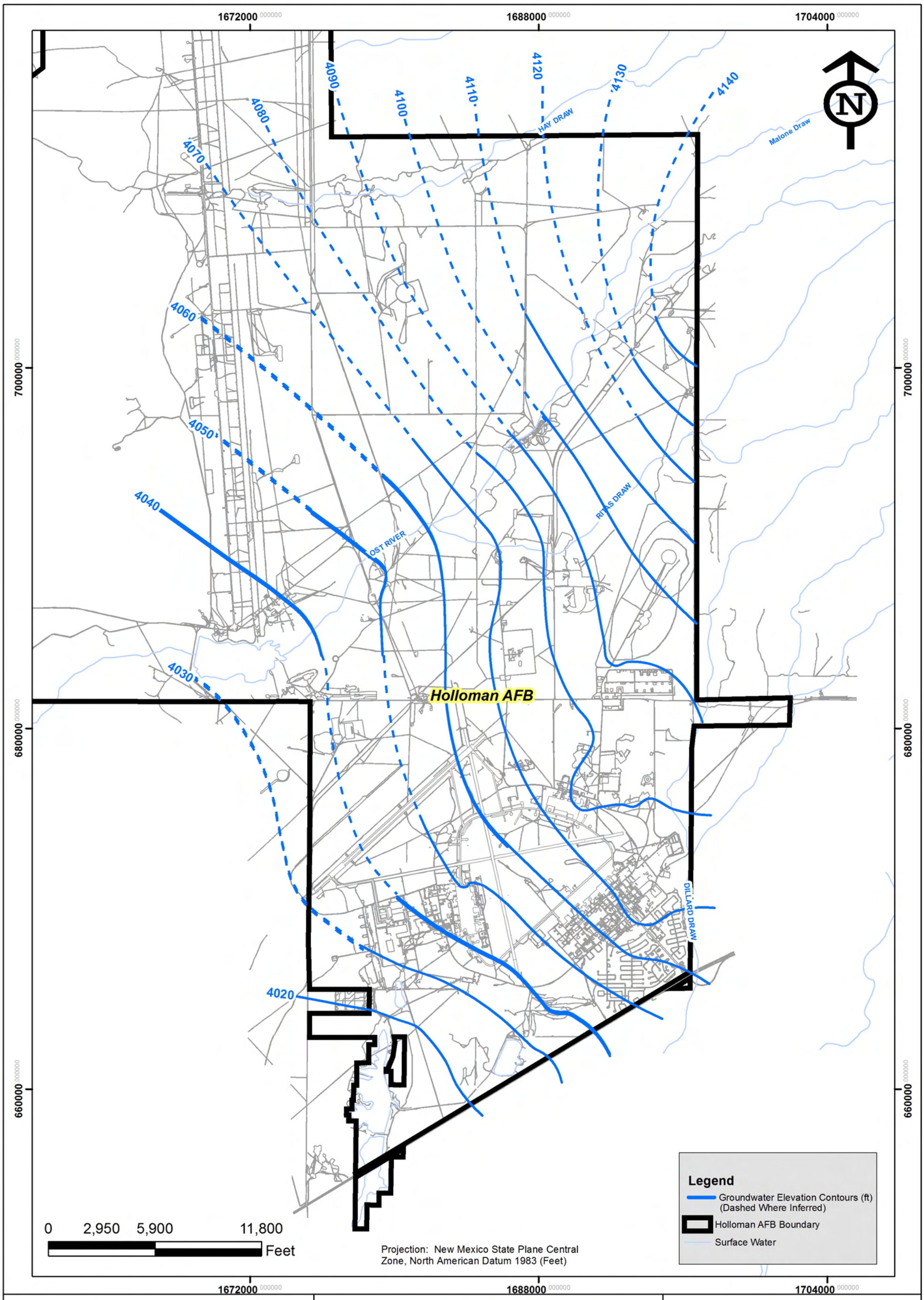

NATIONVIEW

Basewide Groundwater Flow Direction Holloman AFB

PROJECT NO.	SCALE	DATE	DRAWN BY:
8080014	1"=5000'	6/10/09	cm
			DRAWING NO: gwcontour_2-2

SWMU 183
Basewide Sewer System
RCRA Facility Investigation Work Plan
Holloman AFB, New Mexico

Figure 2-2

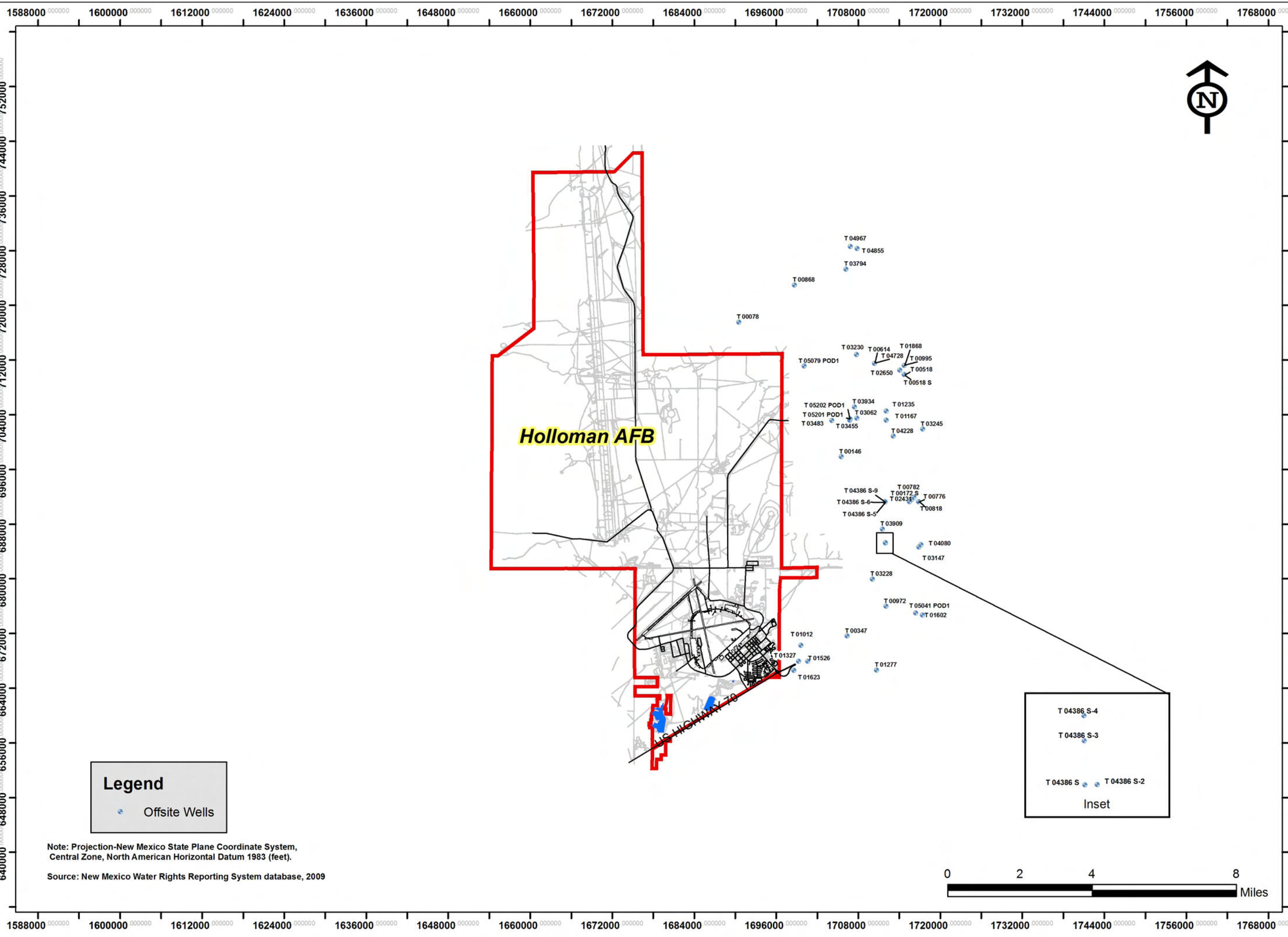

SWMU 183
Basewide Sewer System
RCRA Facility Investigation Work Plan
Holloman Air Force Base, New Mexico

Figure 2-3

Groundwater Wells Located Within a 4-Mile Radius of Holloman AFB

PROJECT NO.	SCALE	DATE	DRAWN BY:	DRAWING NO:
8080014	Shown	7/20/09	cm	Figure 2-3

NATIONVIEW

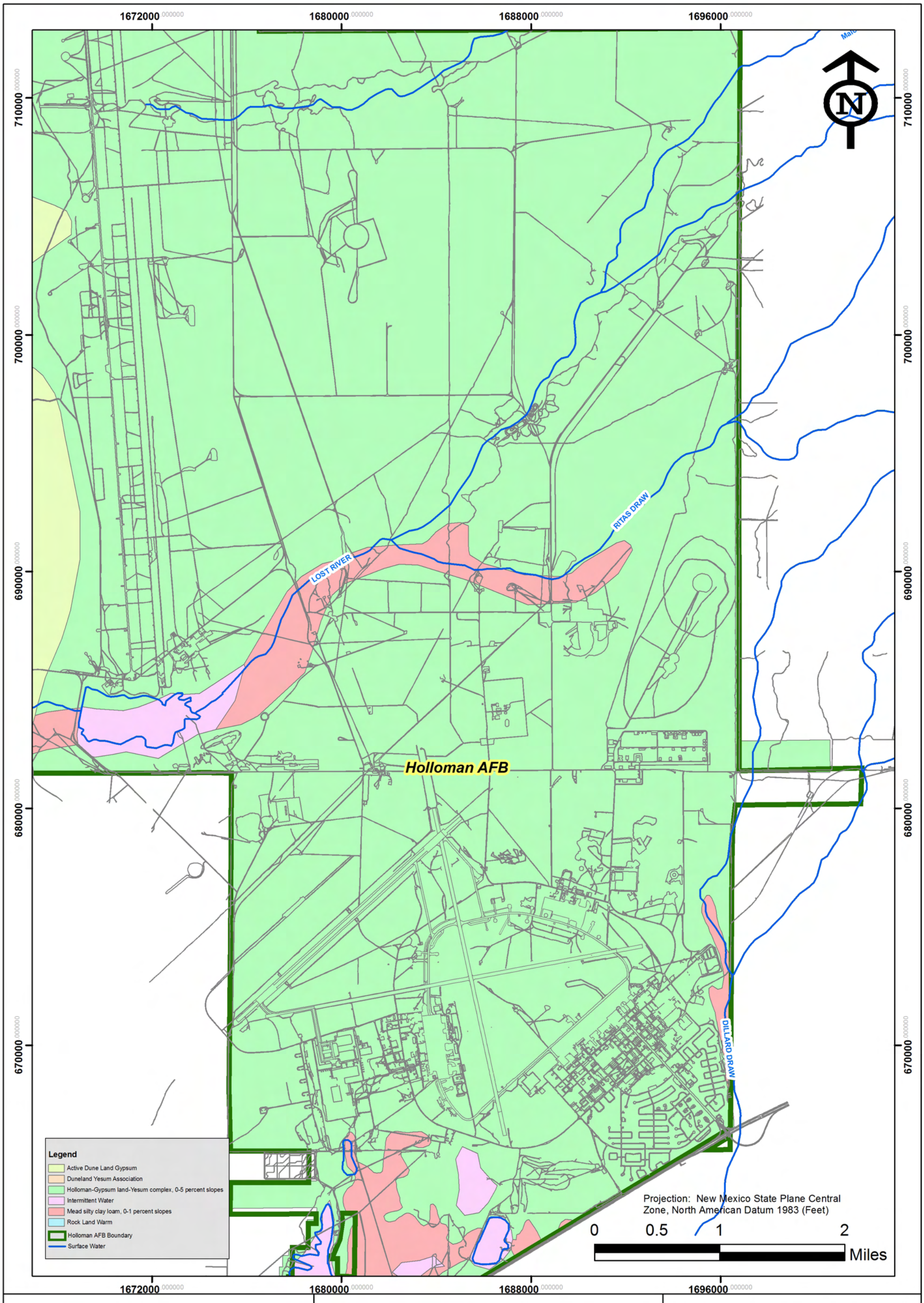

NATIONVIEW

Soil Map
Holloman AFB, New Mexico

PROJECT NO.	SCALE	DATE	DRAWN BY:
8080014	Shown	6/10/09	cm
			DRAWING NO: soils_2-4

SWMU 183
Basewide Sewer System
RCRA Facility Investigation Work Plan
Holloman AFB, New Mexico

Figure 2-4

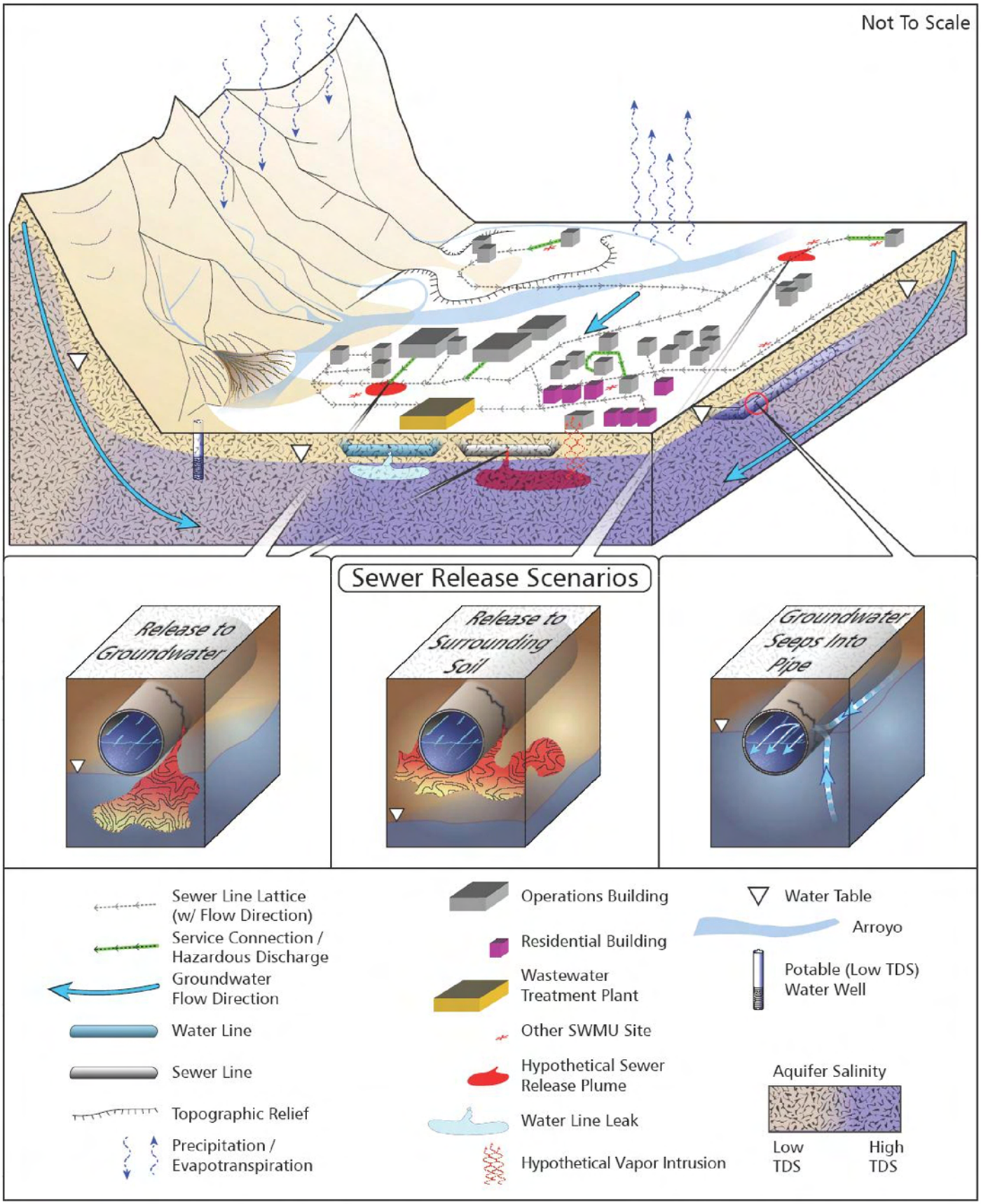

NATIONVIEW

Initial Conceptual Site Model Diagram				SWMU 183 Basewide Sewer System RCRA Facility Investigation Work Plan Holloman AFB, New Mexico
PROJECT NO.	SCALE	DATE	DRAWN BY: cm	
8080014	NTS	6/10/09	DRAWING NO: Figure 5-1	Figure 5-1

PLATES

The Plates are included on a separate CD due to their large size.

TABLES

Table 1-1
Status of Oil/Water Seperator Sites
SWMU 183 RFI Work Plan
Holloman AFB, New Mexico
NationView Project No. 8080014

SWMU No.	Unit Name	RCRA Permit Status[1]	OWS Status
Table A - Sites Requiring Corrective Action			
SWMU 4	Building 131 OWS	Remedial action planned for 2008	Removed 7/20/1995 [2]
SWMU 8	Building 231 OWS	Remedial action planned for 2008	Removed 8/08/1995 [2]
SWMU 19	Building 638 OWS	SS-59 remedial action (ongoing)	Removed 1996 [3]
SWMU 20	Building 639 OWS	SS-59 remedial action (ongoing)	Abandoned
SWMU 39	Building 1092 OWS	FT-31 site remediation	Removed 1996 [3]
Table B - Sites Requiring No Further Action			
SWMU 1	Building 55 OWS	Site received NFA in February 2001	Active (as of 1996) [3]
SWMU 2	Building 121 OWS	Site received NFA in February 2001	Removed 1996 [3]
SWMU 3	Building 130 OWS	Site received NFA in February 2001	Removed 7/27/1995 [2]
SWMU 5	Building 137 OWS	Site received NFA in February 2001	Active (as of July 1995) [4]
SWMU 6	Building 193 OWS	Site received NFA in February 2001	Active (as of July 1995) [4]
SWMU 7	Building 198 OWS	Site received NFA in February 2001	Removed 1996 [3]
SWMU 9	Building 282 OWS	Site received NFA in February 2001	In use as sediment trap (as of 1995) [4]
SWMU 10	Building 283 OWS	Site received NFA in February 2001	Active (as of 1995) [2]
SWMU 11	Building 300 OWS	Site received NFA in February 2001	Active (as of 1996) [3]
SWMU 12	Building 304 OWS	Site received NFA in February 2001	Removed 1993 [4] replaced with new OWS
SWMU 13	Building 304A OWS	Site received NFA in February 2001	Removed 1993 [4] replaced with new OWS
SWMU 14	Building 306 OWS	Site received NFA in February 2001	Active (left in place) June 1997 [5]
SWMU 15	Building 309 OWS	Site received NFA in February 2001	Active (as of October 1994) [6]
SWMU 16	Building 315 OWS	Site received NFA in February 2001	Active (as of July 1995) [4]
SWMU 17	Building 316 OWS	Site received NFA in February 2001	Removed April 1996 [5]
SWMU 18	Building 500 OWS	Site received NFA in February 2001	Removed 7/26/1995 [2]
SWMU 21	Building 702 OWS	Site received NFA in February 2001	Removed 1996 [3]
SWMU 22	Building 704 OWS	Site received NFA in February 2001	Removed 1996 [3]
SWMU 23	Building 800 OWS	Site received NFA in February 2001	Removed January 1996 [5]
SWMU 24	Building 801 OWS	Site received NFA in February 2001	In use as sediment trap (as of July 1995) [4]
SWMU 25	Building 805 OWS	Site received NFA in February 2001	Not found (1996) [3]
SWMU 26	Building 809 OWS	Site received NFA in February 2001	Active (as of July 1995) [4]
SWMU 27	Building 810 OWS	Site received NFA in February 2001	Removed 1996 [3]
SWMU 28	Building 822 OWS	Site received NFA in February 2001	Removed and replaced with a new OWS 1996 [5]
SWMU 29	Building 827 OWS	Site received NFA in February 2001	Removed 1996 [3]
SWMU 30	Building 830 OWS	Site received NFA in February 2001	Active (as of July 1995) [4]
SWMU 31	Building 855 OWS	Site received NFA in February 2001	Removed 1996 [3]
SWMU 32	Building 868 OWS	Site received NFA in February 2001	Active (as of October 1994) [6]
SWMU 33	Building 869 OWS	Site received NFA in February 2001	Active (as of July 1995) [4]
SWMU 34	Building 902 OWS	Site received NFA in February 2001	In use as sediment trap (as of 1995) [4]
SWMU 35	Building 903 OWS	Site received NFA in February 2001	Removed and replaced 1993 [4]
SWMU 36	Building 1000 OWS	Site received NFA in February 2001	Removed 7/19/1995 [2]
SWMU 37	Building 1080 OWS	Site received NFA in February 2001	Active (as of July 1995) [4]
SWMU 38	Building 1080A OWS	Site received NFA in February 2001	Active (as of July 1995) [4]
SWMU 40	Building 1166 OWS	Site received NFA in February 2001	Not found (1996) [3]
SWMU 41	Building 1266 OWS	Site received NFA in February 2001	Active (as of 1996) [3]

Notes:
SWMU = Solid Waste Management Unit
RCRA = Resource Conservation & Recovery Act
OWS = Oil/Water Separator
NFA = No Further Action
POL = Petroleum Oil and Lubricants

[1] Holloman Air Force Base, Hazardous Waste Facility Permit No. NM6572124422, Appendix 4-A: Summary of Solid Waste Management Units, Table A and Table B (New Mexico Environment Department, September 2005)

[2] Closure Report for Remediation of POL-Contaminated Sites and OWS Removals, HAFB, NM (EBASCO, November 1995)

[3] Final Closure Report for Phase II Remediation of POL-Contaminated Sites and OWS and Waste Oil Tank Removals (FWENC, July 1997)

[4] Draft Final, RCRA Facility Investigaiton Report, Table 3 SWMUs (FWENC, July 1995)

[5] Final Closure Report Addendum for Phase II Remediation of POL-Contaminated Sites and OWS and Waste Oil Tank Removals (FWENC, Dec 1997)

[6] Draft Final, Phase I, RCRA Facility Investigation Report, Table 2 SWMUs (Radian, October 1994)

Table 2-1
Groundwater Wells
Located within a 4-Mile Radius
of Holloman Air Force Base
SWMU 183 RFI Work Plan
Holloman AFB, New Mexico
NationView Project No.: 8080014

Well ID Number	Use	NAD 83 UTM (in meters)		Well Depth (feet)
		X	Y	
T 00078	Commercial	398468	3648755	428
T 00868	Domestic	400972	3650377	215
T 03794	Irrigation	403280	3651057	250
T 04855	Domestic	403784	3651965	235
T 04967	Domestic	403480	3652067	200
T 00518	Domestic	405819	3646323	305
T 00518 S	Domestic	405819	3646323	220
T 00614	Domestic	404503	3646838	245
T 00995	Domestic	405824	3646730	308
T 01868	Domestic	405824	3646730	280
T 02650	Domestic	405619	3646523	265
T 03230	Domestic	403699	3647252	160
T 04728	Domestic	404503	3646838	216
T 05079 POD1	Domestic	401365	3646757	406
T 01167	Livestock	404993	3644302	170
T 01235	Irrigation	404995	3644706	200
T 03062	Commercial	403678	3644412	295
T 03455	Domestic	403365	3644318	150
T 03483	Domestic	402565	3644318	140
T 03934	Commercial	403578	3644915	160
T 05201 POD1	Irrigation	403380	3644374	295
T 05202 POD1	Irrigation	403381	3644374	250
T 00146	Livestock	402960	3642700	110
T 03245	Commercial	406609	3643887	190
T 04228	Domestic	405295	3643589	180
T 04386 S-6	Commercial	404903	3640666	290
T 04386 S-9	Commercial	404895	3640673	320
T 00172 S	Irrigation	406088	3640755	125
T 00776	Irrigation	406391	3640650	120
T 00782	Domestic	406187	3640854	120
T 00818	Irrigation	406391	3640650	125
T 02431	Domestic	405987	3640654	152
T 03909	Livestock	404765	3639453	140
T 04386 S	Commercial	404886	3638830	290
T 04386 S-2	Commercial	404888	3638830	310
T 04386 S-3	Commercial	404886	3638837	300
T 04386 S-4	Commercial	404886	3638841	295
T 04386 S-5	Commercial	404903	3640661	310
T 03147	Domestic	406380	3638633	135
T 04080	Domestic	406481	3638734	170
T 03228	Domestic	404290	3637226	160
T 00347	Domestic	403131	3634704	182
T 00972	Domestic	404882	3636009	150
T 01602	Domestic	406510	3635592	135
T 05041 POD1	Domestic	406205	3635697	200
T 01012	Commercial	401072	3634316	72
T 01277	Commercial	404434	3633172	104
T 01327	Commercial	400958	3633604	90
T 01526	Commercial	401368	3633601	152
T 01623	Domestic	400743	3633202	260

Notes:
ID = Identification
NAD = North American Datum
UTM = Universal Transverse Mercator
Source: New Mexico Water Rights Reporting System Database, 2009

Table 3-1
Borehole Location / Sampling Rationale
SWMU 183 RFI Work Plan
Holloman AFB, New Mexico
NationView Project No. 8080014

Borehole Location ID Number	Sub-Basin ID Number	Upgradient Manhole ID Number	Line Type / Condition	Upgradient/Nearby SWMUs/AOCs/ERP Sites	Borehole/Sampling Location Rationale
1	9	MH510	PVC / Good Condition	Upgradient ERP Sites: PRI-2 and PRI-5 (OT-35)	Pipe junction; downgradient of two ERP sites
2	9	MH507	PVC / Good Condition	Upgradient ERP Sites: PRI-2 and PRI-5 (OT-35)	Pipe junction; downgradient of two ERP sites
3	9	MH504	PVC / Good Condition	No nearby ugradient sites	Within Suspected Sewage Release Area #2
4	9	113713	PVC, Concrete / Good Condition	Downgradient (Nearby ERP Site) PRI-A (OT-32)	Pipe junction; wewer line material type change
5	8	MH523B	Concrete / Unknown Condition	No nearby sites	Pipe junction
6	8	MH493Q	PVC (Force Main) / Good Condition	Upgradient SWMUs: 165, 177, 179, 181 (SS-39), and 137 (OT-38)	Pipe junction; several up gradient SWMUs
7	8	LS493C	PVC (Force Main) / Unknown Condition	No nearby sites	Pipe junction/lift station
8	8	MH494	PVC, Concrete, Vitrified Clay / Good Condition	Upgradient ERP site PRI-A (OT-32)	Pipe junction; sewer line material type change; downgradient of PRI-A
9	8	113715	Unknown type / Unknown condition	Upgradient ERP site PRI-A (OT-32)	Pipe junction (unknown pipe type and condition); downgradient of PRI-A within Suspected Sewage Release Area
10	8	MH490	PVC / Good Condition	Upgradient ERP site PRI-A (OT-32)	Downgradient of PRI-A; within the Suspected Sewage Release Area #1
11	7	MH710	PVC, Concrete / Good Condition	No nearby sites	Pipe junction; sewer line material type change
12	7	MH474	Unknown type / Unknown condition	Upgradient ERP sites: AOC-1001 (SS-61) and SWMU 104 (LF-29)	Pipe junction (unknown pipe type and condition); downgradient of AOC-1001 and SWMU 104
13	7	MH463	PVC, Unknown / Good Condition	No nearby sites	Pipe junction; sewer line material type change
14	7	MH459	Unknown, Abandoned / Unknown Condition	No nearby sites	Pipe junction; sewer line material type change
15	6	MH449	PVC / Good Condition	No nearby sites	Pipe junction; sewer line material type change
16	6	MH443	PVC / Good Condition	Upgradient ERP site: AOC-4 (WPOL)	Pipe junction; downgradient of AOC-4
17	10	MH852	PVC / Unknown Condition	Upgradient ERP site: AOC-I (SS-69) Downgradient (nearby) ERP site: AOC-B (SS-65)	Pipe junction; downgradient of AOC-I
18	10	MH404	PVC / Unknown Condition	Upgradient ERP Site: AOC-C (SS-66)	Pipe junction; downgradient of AOC-C
19	10	MH415	PVC / Good Condition	No nearby sites	Pipe junction

Table 3-1
Borehole Location / Sampling Rationale
SWMU 183 RFI Work Plan
Holloman AFB, New Mexico
NationView Project No. 8080014

Borehole Location ID Number	Sub-Basin ID Number	Upgradient Manhole ID Number	Line Type / Condition	Upgradient/Nearby SWMUs/AOCs/ERP Sites	Borehole/Sampling Location Rationale
20	10	MH418	PVC, Concrete / Unknown Condition	No nearby sites	Pipe junction
21	10	MH422	PVC, concrete cast insitu / Good Condition	No nearby upgradient sites	Pipe junction
22	10	MH426	PVC / Good Condition	Upgradient ERP Site: AOC-E (SS-67)	Pipe junction; downgradient of AOC-E
23	10	MH430	PVC / Poor Condition	No nearby sites	Pipe junction
24	10	MH431	PVC, abandoned line / Good Condition	No nearby sites	Pipe junction with an abandoned line
25	10	LS463A	PVC, concrete (Force Main) / Good Condition	Upgradient (nearby) SWMUs: 108 (LF-23), 115 (LF-22), and 116 (LF-21)	Pipe junction/lift station, downgradient of three SWMUs
26	4	MH321D	PVC, Concrete / Good Condition	Upgradient ERP sites: SWMUs 122 and 123, 114 (OT-03), and AOC-T (SS+02/05)	Pipe junction; sewer line material type change; downgradient of 4 ERP sites
27	4	MH321	PVC (Force Main) / Good Condition	Adjacent (nearby) ERP site: SWMU 82 (SD-08)	Pipe junction; nearby ERP site SD-08
28	4	MH316	PVC / Unknown Condition	Upgradient ERP Sites: SWMU 4, AOC-J (SS-13), and SD-08	Pipe junction; downgradient of three ERP Sites
29	4	MH327	PVC / Good Condition	No upgradient sites	Pipe junction
30	4	MH314	PVC / Unknown Condition	Upgradient ERP sites: AOC-N (SS-48) and SWMU 197 (OT-14)	Pipe junction; downgradient of two ERP sites
31	4	MH309	PVC, vitrified clay / Unknown Condition	No nearby ugradient sites	Pipe junction; sewer line material type change
32	4	MH334B	PVC, Concrete / Good Condition	Upgradient ERP site: SWMU 130 (SS-46)	Pipe junction; sewer line material change; downgradient of an ERP site
33	4	MH343	PVC, Concrete, Vitrified Clay / Unknown Condition	Upgradient ERP sites: SWMU 8, AOC-P (OT-44), and AOC-H (SS-18)	Pipe junction; sewer line material change (3-way change); downgradient of three ERP sites
34	4	MH301A	PVC, Concrete / Unknown Condition	No nearby ugradient sites	Pipe junction; sewer line material change
35	4	MH292	PVC, abandoned line / Good Condition	No nearby ugradient sites	Pipe junction
36	5	MH347	PVC, Concrete, Vitrified Clay / Unknown Condition	Upgradient ERP Sites: SWMUs 229, 19, and 20 (SS-59), and AOC-O (OT-45)	Pipe junction; multiple sewer line material type changes; downgradient of 4 ERP sites
37	5	MH366	PVC / Unknown Condition	Upgradient AOC: AOC-O (OT-45)	Pipe junction; downgradient of AOC-O
38	5	MH351	PVC, vitrified clay, unknown material / Good condition	No nearby ERP sites	Pipe junction; multiple sewer line material type changes; within the Suspected Sewer/Natural Gas Release Area

Table 3-1
Borehole Location / Sampling Rationale
SWMU 183 RFI Work Plan
Holloman AFB, New Mexico
NationView Project No. 8080014

Borehole Location ID Number	Sub-Basin ID Number	Upgradient Manhole ID Number	Line Type / Condition	Upgradient/Nearby SWMUs/AOCs/ERP Sites	Borehole/Sampling Location Rationale
39	5	MH355	PVC, Concrete / Unknown Condition	No nearby ERP sites	Pipe junction; sewer line material type change
40	5	MH356	PVC, Unknown / Poor Condition	No nearby ERP sites	Pipe junction; sewer line material type change
41	5	MH286	PVC, vitrified clay / Unknown Condition	Upgradient AOC: AOC-V	Pipe junction; sewer line material type change; downgradient of AOC-V
42	5	MH281	PVC / Good Condition	No nearby ERP sites	Pipe junction
43	3	MH213	Unknown type / Unknown condition	Upgradient ERP site: AOC-K (SS-12)	Pipe junction; downgradient of AOC-K
44	2	MH34	Concrete, Asbestos concrete / Fair condition	No nearby ERP sites	Pipe junction; sewer line material type change
45	2	MH25	Concrete, unknown material type / Fair Condition	No nearby ERP sites	Pipe junction; sewer line material type change
46	2	MH17	PVC (Force Main) / Good Condition	No nearby ERP sites	Pipe junction
47	1	MH9	PVC / Good Condition	No nearby ERP sites	Pipe junction
48	1	113559	Abandoned Line	No nearby ERP sites	Pipe junction; abandoned sewer line
49	1	LS395A	PVC (Force Main) / Good Condition	No nearby ERP sites	Pipe junction (Force Main)
50	1	MH437	PVC / Good Condition	No nearby ERP sites	Pipe junction
51	1	MHX9X	PVC, Unknown / Good Condition	Upgradient SWMU: SWMU 113A (OT-20)	Pipe junction; sewer line material type change; downgradient of SWMU 113A
52	1	LSX9X1	PVC, Unknown line / PVC in Good Condition	Upgradient sites: Lift Station, infrastructure	Pipe junctions/terminous; Water Treatment System

Notes:
AOC = Area of Concern
ERP = Environmental Restoration Program
ID = Identification
SWMU = Soild Waste Management Unit
PVC = Polyvinyl chloride
MH = Manhole
LS = Lift Station

Table 3-2
Contaminants of Potential Concern Discharged to the Sewer System
SWMU 183 RFI Work Plan
Holloman AFB, New Mexico
NationView Project No. 8080014

Name of Contaminant
Petroleum, Oils, and Lubricants (POL)
Metals / Heavy Metals
Volatile Organic Compounds (VOCs)
Semi-Volatile Organic Compounds (SVOCs)
Surfactants
Oil & Grease (O&G)
Process / Developer Chemicals
Herbicides / Pesticides
Antifreeze
Phosphates
Sulfates
Chlorides
Phenol
Radionuclides (Carbon-14, Tritium, Iodine 125, Radium 226 and 228)

Table 3-3
Types of Waste-Generating Processes
SWMU 183 RFI Work Plan
Holloman AFB, New Mexico
NationView Project No. 8080014

Unique Process Activities/Disharge Points
X-ray Processing
Hospital Sterilization
Hospital Sinks
Hospital Boiler/Chiller Systems
Radiator test tanks
Glass grinding coolant
Aqueous Film-Forming Foam (AFFF)
Photoprocessing
Laboratory Canister Rinsing
Glassware Rinsing
Non-Destructive Inspection (NDI) – Liquid Fluorescent Penetrant
Tungsten inert gas (TIG) Welder coolant
Heat Treatment Furnace Coolant
Fuel-Contaminated Groundwater
Reverse Osmosis Water Purification Unit (ROWPU) Purging
Bulk Washing Activities
Rack Washing
Floor washing
Vehicle Washing
Equipment Washing
Aircraft Washing
Ground Equipment Washing
Engine Washing
Trench Drain Flushing
Trailer Washing
Mop Rinsing

Table 4-1
Plant Species Observed at Holloman Air Force Base
SWMU 183 RFI Work Plan
Holloman AFB, New Mexico
NationView Project No. 8080014

Common Name	Scientific Name
Desert holly	*Acourtia nana*
Iodine bush (or pickleweed bush)	*Allenrolfea occidentalis*
Western ragweed	*Ambrosia psilostachya*
Fourwing saltbush	*Atriplex canescens*
Seep willow	*Baccharis salicifolia*
Thistle	*Cirsium undulatum*
Alkaliweed	*Cressa truxillensis*
Fluffgrass	*Dasyochloa pulchella*
Tansymustard	*Descurainia pinnata*
Desert saltgrass	*Distichlis spicata var. stricta*
Spectaclepod	*Dithyrea wislizeni*
Fendler's hedgehog	*Echinocereus fenderli*
Flaming torch hedgehog	*Echinocereus triglochidiatus*
Torrey's jointfir	*Ephedra torreyana*
Buckwheat	*Eriogonum spp.*
Coryphantha (or spinystar)	*Escobaria vivipara*
Tarbush	*Flourensia cernua*
Broom snakeweed	*Gutierrezia sarothrae*
Salt heliotrope	*Heliotropium curassavicum*
Tobosa	*Hilaria mutica*
Bushpea	*Hoffmanseggia glauca*
Hymonepappus	*Hymenopappus spp.*
Allthorn	*Koeberlinia spinosa*
Creosotebush	*Larrea tridentata*
Peppergrass	*Lepidium virginicum*
Bladderpod	*Lesquerella spp.*
Wolfberry	*Lycium berlandieri*
Blazingstar	*Mentzelia multiflora*
Bush muhly	*Muhlenbergia porteri*
Ring muhly	*Muhlenbergia torreyi*
Prickly pear	*Opuntia spp.*
Purple prickly pear	*Opuntia violacea*
Tulip prickly pear	*Opuntia phaeacantha*
Plains prickly pear	*Opuntia polycantha*
Walkingstick cholla	*Opuntia imbracata*
Tasajillo	*Opuntia leptocaulis*
Mariola	*Parthenium incanum*
Devil's claw	*Proboscidea parviflora*
Honey mesquite	*Prosopis glandulosa*
Curly dock	*Rumex crispus*
Russian thistle	*Salsola kali*
Burrograss	*Scleropogon brevifolius*
Silverleaf nightshade	*Solanum elaeagnifolium*
Globemallow	*Sphaeralcea spp.*
Spear globemallow	*Sphaeralcea subhastata*
Alkali sacaton	*Sporobolus airoides*
Neally dropseed	*Sporobolus nealleyi*
Saltcedar	*Tamarix ramosissima*
Grama grass cactus	*Toumeya papyracantha*
Soaptree yucca	*Yucca elata*

Table 4-2
Herpetofauna Species Observed at Holloman Air Force Base
SWMU 183 RFI Work Plan
Holloman AFB, New Mexico
NationView Project No. 8080014

Common Name	Scientific Name
Little striped whiptail	*Cnemidophorus inornatus*
New Mexico whiptail	*Cnemidophorus neomexicanus*
Checkered whiptail	*Cnemidophorus tesselatus*
Western diamondback rattlesnake	*Crotalus atrox*
Western prairie rattlesnake (or Western	*Crotalus viridis*
Common collared lizard	*Crotaphytus collaris*
Long-nosed leopard lizard	*Gambelia wislizenii*
Lesser earless lizard	*Holbrookia maculata*
Coachwhip	*Masticophis flagellum*
Texas horned lizard	*Phrynosoma cornutum*
Short-horned lizard	*Phrynosoma modestum*
Gopher snake	*Pituophis melanoleucus*
Couch's spadefoot toad	*Scaphiopus couchii*
Desert spiny lizard	*Sceloporus magister*
Massasauga	*Sistrurus catenatus*
Ground snake	*Sonora semiannulata*
Side-blotched lizard	*Uta stansburiana*

Table 4-3
Bat Species Observed at Holloman Air Force Base
SWMU 183 RFI Work Plan
Holloman AFB, New Mexico
NationView Project No. 8080014

Common Name	Scientific Name
Pallid bat	*Antrozous pallidus pallidus*
Mexican free-tailed bat	*Tadarida brasiliensis*
Hoary bat	*Lasiurus cinereus*
Small-footed myotis	*Myotis ciliolabrum melanorhinus*
California myotis	*Myotis californicus*
Townsend's big-eared bat	*Corynorhinus townsendii*
Silver-haired bat	*Lasionycteris noctivagans*
Spotted bat	*Euderma maculatum*

Table 4-4
Rodent Species Observed at Holloman Air Force Base
SWMU 183 RFI Work Plan
Holloman AFB, New Mexico
NationView Project No. 8080014

Common Name	Scientific Name
Desert Pocket Mouse	*Chaetodipus penicillatus*
Merriam Kangaroo Rat	*Dipodomys merriami*
Ord's Kangaroo Rat	*Dipodomys ordii*
House Mouse	*Mus musculus*
Southern Plains Woodrat	*Neotoma micropus canescens*
Mearn's Grasshopper Mouse	*Onychomys arenicola*
Plains Pocket Mouse	*Perognathus flavescens*
Plains Pocket Mouse (lighter pelage)	*Perognathus flavescens gypsi*
Silky Pocket Mouse	*Perognathus flavus*
Cactus Mouse	*Peromyscus eremicus*
White-footed Mouse	*Peromyscus leucopus*
Deer Mouse	*Peromyscus maniculatus*
Western Harvest Mouse	*Reithrodontomys megalotis*
Spotted Ground Squirrel	*Spermophilus spilosoma*

Table 4-5
Bird Species Observed at Holloman Air Force Base
SWMU 183 RFI Work Plan
Holloman AFB, New Mexico
NationView Project No. 8080014

Common Name	Scientific Name
Raptors	
Turkey vulture	*Cathartes aura*
American kestrel	*Falco sparverius*
Red-tailed hawk	*Buteo jamaicensis*
Northern harrier	*Circus cyaneus*
Goatsuckers	
Lesser nighthawk	*Chordeiles acutipennis*
Perching Birds and Neotropical Shorebirds	
Horned lark	*Eremophila alpestris*
Cactus wren	*Campylorhynchus brunneicapillus*
Black-throated sparrow	*Amphispiza bilineata*
Western meadowlark	*Sturnella neglecta*
Scott's oriole	*Icterus parisorum*
American avocet	*Recurvirostra Americana*
Green heron	*Butorides virescens*
Western kingbird	*Tyrannus verticalis*
Blue grosbeak	*Guiraca caerulea*
Flycatchers	*Empidonax sp.*
Wilson's warbler	*Wilsonia Canadensis*
Shorebirds and Waterfowl	
Mallards	*Anas platyrhynchos*
Northern shoveler	*Anas clypeata*
Blue-winged teal	*Anas discors*
Lesser scaup	*Aythya affinis*
Ring-necked duck	*Aythya collaris*
Ruddy duck	*Oxyura jamaicensis*
Snowy plover	*Charadrius alexandrinus nivosus*
Wilson's phalarope	*Phalaropus tricolor*

Table 6-1
Soil Sampling and Analysis for Sub-Basins 1, 2, 3, 5, 6, 7, and 10
SWMU 183 RFI Work Plan
Holloman AFB, New Mexico
NationView Project No. 8080014

Analysis	Method	Primary	Duplicates [1]	MS [2]	MSD [3]	Trip blanks [4]	Total
VOC	USEPA SW846 Method 8260B	32	4	2	2	14	54
SVOC	USEPA SW846 Method 8270C	32	4	2	2	0	40
TAL Metals	USEPA SW846 Methods 6010B/7471A	32	4	2	2	0	40
TPH DRO	USEPA SW846 Method 8015B	32	4	2	2	0	40
TPH GRO	USEPA SW846 Method 8015B	32	4	2	2	0	40
TPH ORO	USEPA SW846 Method 8015B	32	4	2	2	0	40
PCBs	USEPA SW846 Method 8082	32	4	2	2	0	40
Nitrate	USEPA MCAWW Method 353.2	32	4	2	2	0	40
Sulfate	USEPA SW846 Method 9056	32	4	2	2	0	40
Chloride	USEPA SW846 Method 9056	32	4	2	2	0	40
Moisture Content	USEPA MCAWW Method 160.3	32	4	2	2	0	40

Notes:
USEPA = United States Environmental Protection Agency
MS = Matrix Spike
MSD = Matrix Spike Duplicate
VOC = Volatile Organic Compounds
SVOC = Semi-volatile Organic Compounds
TAL = Target Analyte List
TPH = Total Petroleum Hydrocarbons
DRO = Diesel Range Organics
GRO = Gasoline Range Organics
ORO = Oil Range Organics
PCBs = Polychlorinated biphenyls
SW = USEPA Office of Solid Waste
MCAWW = Methods for Chemical Analysis of Water and Wastes

[1] Duplicate samples will be collected at a minimum frequency of one for every 10 primary samples collected
[2] MS samples will be collected at a minimum frequency of one for every 20 primary samples collected
[3] MSD samples will be collected at a minimum frequency of one for every 20 primary samples collected
[4] Estimated, one trip blank will accompany every shipment of VOC samples

Table 6-2
Soil Sampling and Analysis for Sub-Basin 4
SWMU 183 RFI Work Plan
Holloman AFB, New Mexico
Nationview Project No. 8080014

Analysis	Method	Primary	Duplicates [1]	MS [2]	MSD [3]	Trip blanks [4]	Total
VOC	USEPA SW846 Method 8260B	10	1	1	1	5	18
SVOC	USEPA SW846 Method 8270C	10	1	1	1	0	13
TAL Metals	USEPA SW846 Methods 6010B/7471A	10	1	1	1	0	13
TPH DRO	USEPA SW846 Method 8015B	10	1	1	1	0	13
TPH GRO	USEPA SW846 Method 8015B	10	1	1	1	0	13
TPH ORO	USEPA SW846 Method 8015B	10	1	1	1	0	13
PCBs	USEPA SW846 Method 8082	10	1	1	1	0	13
Pesticides	USEPA SW846 Method 8081A	10	1	1	1	0	13
Herbicides	USEPA SW846 Method 8151A	10	1	1	1	0	13
Nitrate	USEPA MCAWW Method 353.2	10	1	1	1	0	13
Sulfate	USEPA SW846 Method 9056	10	1	1	1	0	13
Chloride	USEPA SW846 Method 9056	10	1	1	1	0	13
Moisture Content	USEPA MCAWW Method 160.3	10	1	1	1	0	13

Notes:
USEPA = United States Environmental Protection Agency
MS = Matrix Spike
MSD = Matrix Spike Duplicate
VOC = Volatile Organic Compounds
SVOC = Semi-volatile Organic Compounds
TAL = Target Analyte List
TPH = Total Petroleum Hydrocarbons
DRO = Diesel Range Organics
GRO = Gasoline Range Organics
ORO = Oil Range Organics
PCB = Polychlorinated biphenyls
SW = USEPA Office of Solid Waste
MCAWW = Methods for Chemical Analysis of Water and Wastes

[1] Duplicate samples will be collected at a minimum frequency of one for every 10 primary samples collected
[2] MS samples will be collected at a minimum frequency of one for every 20 primary samples collected
[3] MSD samples will be collected at a minimum frequency of one for every 20 primary samples collected
[4] Estimated, one trip blank will accompany every shipment of VOC samples

Table 6-3
Soil Sampling and Analysis for Sub-Basin 8
SWMU 183 RFI Work Plan
Holloman AFB, New Mexico
Nationview Project No. 8080014

Analysis	Method	Primary	Duplicates [1]	MS [2]	MSD [3]	Trip blanks [4]	Total
VOC	USEPA SW846 Method 8260B	6	1	1	1	3	12
SVOC	USEPA SW846 Method 8270C	6	1	1	1	0	9
TAL Metals	USEPA SW846 Methods 6010B/7471A	6	1	1	1	0	9
TPH DRO	USEPA SW846 Method 8015B	6	1	1	1	0	9
TPH GRO	USEPA SW846 Method 8015B	6	1	1	1	0	9
TPH ORO	USEPA SW846 Method 8015B	6	1	1	1	0	9
PCBs	USEPA SW846 Method 8082	6	1	1	1	0	9
Perchlorate	USEPA SW846 Method 6860	6	1	1	1	0	9
Carbon-14	EERF Method C-01-1	6	1	1	1	0	9
Tritium	USEPA Method 906.0	6	1	1	1	0	9
Radium 226	USEPA Method 903.0 MOD	6	1	1	1	0	9
Radium 228	USEPA SW846 Method 9320	6	1	1	1	0	9
Nitrate	USEPA MCAWW Method 353.2	6	1	1	1	0	9
Sulfate	USEPA SW846 Method 9056	6	1	1	1	0	9
Chloride	USEPA SW846 Method 9056	6	1	1	1	0	9
Moisture Content	USEPA MCAWW Method 160.3	6	1	1	1	0	9

Notes:
USEPA = United States Environmental Protection Agency
MS = Matrix Spike
MSD = Matrix Spike Duplicate
VOC = Volatile Organic Compounds
SVOC = Semi-volatile Organic Compounds
TAL = Target Analyte List
TPH = Total Petroleum Hydrocarbons
DRO = Diesel Range Organics
GRO = Gasoline Range Organics
ORO = Oil Range Organics
PCB = Polychlorinated biphenyls
SW = USEPA Office of Solid Waste
EERF = Eastern Environmental Radiation Facility
MOD = Modified
MCAWW = Methods for Chamical Analysis of Water and Wastes

[1] Duplicate samples will be collected at a minimum frequency of one for every 10 primary samples collected
[2] MS samples will be collected at a minimum frequency of one for every 20 primary samples collected
[3] MSD samples will be collected at a minimum frequency of one for every 20 primary samples collected
[4] Estimated, one trip blank will accompany every shipment of VOC samples

Table 6-4
Soil Sampling and Analysis for Sub-Basin 9
SWMU 183 RFI Work Plan
Holloman AFB, New Mexico
Nationview Project No. 8080014

Analysis	Method	Primary	Duplicates [1]	MS [2]	MSD [3]	Trip blanks [4]	Total
VOC	USEPA SW846 Method 8260B	4	1	1	1	3	10
SVOC	USEPA SW846 Method 8270C	4	1	1	1	0	7
TAL Metals	USEPA SW846 Methods 6010B/7471A	4	1	1	1	0	7
TPH DRO	USEPA SW846 Method 8015B	4	1	1	1	0	7
TPH GRO	USEPA SW846 Method 8015B	4	1	1	1	0	7
TPH ORO	USEPA SW846 Method 8015B	4	1	1	1	0	7
PCBs	USEPA SW846 Method 8082	4	1	1	1	0	7
Carbon-14	EERF Method C-01-1	4	1	1	1	0	7
Tritium	USEPA Method 906.0	4	1	1	1	0	7
Radium 226	USEPA Method 903.0 MOD	4	1	1	1	0	7
Radium 228	USEPA SW846 Method 9320	4	1	1	1	0	7
Nitrate	USEPA MCAWW Method 353.2	4	1	1	1	0	7
Sulfate	USEPA SW846 Method 9056	4	1	1	1	0	7
Chloride	USEPA SW846 Method 9056	4	1	1	1	0	7
Moisture Content	USEPA MCAWW Method 160.3	4	1	1	1	0	7

Notes:

USEPA = United States Environmental Protection Agency
MS = Matrix Spike
MSD = Matrix Spike Duplicate
VOC = Volatile Organic Compounds
SVOC = Semi-volatile Organic Compounds
TAL = Target Analyte List
TPH = Total Petroleum Hydrocarbons
DRO = Diesel Range Organics
GRO = Gasoline Range Organics
ORO = Oil Range Organics
PCB = Polychlorinated biphenyls
EERF = Eastern Environmental Radiation Facility
SW = USEPA Office of Solid Waste
MOD = Modified
MCAWW = Methods for Chemical Analysis of Water and Wastes

[1] Duplicate samples will be collected at a minimum frequency of one for every 10 primary samples collected
[2] MS samples will be collected at a minimum frequency of one for every 20 primary samples collected
[3] MSD samples will be collected at a minimum frequency of one for every 20 primary samples collected
[4] Estimated, one trip blank will accompany every shipment of VOC samples

Table 6-5
Sample Containers and Holding Times by Sample Media
SWMU 183 RFI Work Plan
Holloman AFB, New Mexico
NationView Project No. 8080014

Media	Sample Collection Information	Analyte Group (Method)																	
		VOCs (USEPA SW846 Method 8260B)	SVOCs (USEPA SW846 Method 8270C)	TPH GRO (USEPA SW846 Method 8015B)	TPH DRO/ORO (USEPA SW846 Method 8015B)	TAL metals (USEPA SW846 Methods 6040B/7040A/ 7041A)	PCBs (USEPA SW846 Method 8082)	Pesticides (USEPA SW846 Method 8081A)	Herbicides (USEPA SW846 Method 8151A)	Perchlorate (USEPA SW846 Method 6860)	Carbon-14 (EERF Method C-01-1)	Tritium (USEPA Method 906.0)	Radium 226 (USEPA Method 903.0 MOD)	Radium 228 (USEPA Method 904 MOD / SW846 9320)	Nitrate (USEPA MCAWW Method 353.2)	Sulfate (USEPA SW846 Method 9056)	Chloride (USEPA SW846 Method 9056/SM 19 Method 4500CL C)	Moisture Content (USEPA MCAWW Method 160.3)	TDS (USEPA SM18 Method 2540C)
Soil	Container Type	En Core	8 oz glass jar	En Core	8 oz glass jar	8 oz glass jar	8 oz glass jar	4 oz glass jar	8 oz glass jar	4 oz glass jar	8 oz glass jar	8 oz glass jar	8 oz glass jar	8 oz glass jar	4 oz glass jar	4 oz glass jar	4 oz glass jar	4 oz glass jar	NA
	Container Quantity	3	1	2	1	1	1	1	1	1	1	1	1	1	1	1	1	1	NA
	Holding Time	48 hours	14 days (extraction) 40 days (analysis)	48 hours	14 days (extraction) 40 days (analysis)	180 days / Mercury 28 days	14 days (extraction) 40 days (analysis)	14 days (extraction) 40 days (analysis)	14 days (extraction) 40 days (analysis)	28 days	180 days	180 days	180 days	180 days	48 hours	28 days	28 days	10 days	NA
Groundwater	Container Type	40-mL VOAs	1-L Amber	40-mL VOAs	1-L Amber	500-mL Poly	1-L Amber	1-L Amber	1-L Amber	40 mL VOA	1-L Amber	1-L Amber	1-L Amber	1-L Amber	250-mL Poly	250-mL Poly	250-mL Poly	NA	500-mL Poly
	Preservative	HCl	NA	HCl	H_2SO_4	HNO_3	NA	NA	NA	NA	HNO_3 (if pH < 2)	HNO_3 (if pH < 2)	HNO_3 (if pH < 2)	HNO_3 (if pH < 2)	H_2SO_4	NA	NA	NA	NA
	Container Quantity	3	2	3	2	1	2	1	1	2	1	1	1	1	1	1	1	NA	1
	Holding Time	14 days (preserved) 7 days (non preserved)	7 days (extraction) 40 days (analysis)	14 days (preserved) 7 days (non preserved)	7 days (extraction) 40 days (analysis)	180 days / Mercury 28 days	7 days (extraction) 40 days (analysis)	7 days (extraction) 40 days (analysis)	7 days (extraction) 40 days (analysis)	28 days	180 days	180 days	180 days	180 days	48 hours	28 days	28 days	NA	48 hours

Notes:
VOC = Volatile Organic Compounds
SVOC = Semi Volatile Organic Compounds
TPH = Total Petroleum Hydrocarbons
TDS = Total Dissolved Solids
GRO = Gasoline Range Organics
DRO = Diesel Range Organics
ORO = Oil Range Organics
TAL = Target Analyte List
PCB = Polychlorinated Biphenyls
USEPA = U.S. Environmental Protection Agency
SW = USEPA Office of Solid Waste
MCAWW = Methods for Chemical Analysis of Water and Wastes
SM = Standard Method
EERF = Eastern Environmental Radiation Facility
MOD = Modified
NA = Not Applicable
oz = ounce
mL = milliliter
VOA = Volatile Organic Analysis (vial)
L = Liter
Poly = Polyethylene
H_2SO_4 = Sulfuric Acid
HNO_3 = Nitric Acid
HCl = Hydrochloric Acid

Table 6-6
Groundwater Sampling and Analysis for Sub-Basins 1, 2, 3, 5, 6, 7, and 10
SWMU 183 RFI Work Plan
Holloman AFB, New Mexico
Nationview Project No. 8080014

Analysis	Method	Primary [1]	Duplicates [2]	MS [3]	MSD [4]	Trip blanks [5]	Total
VOC	USEPA SW846 Method 8260B	TBD	TBD	TBD	TBD	TBD	TBD
SVOC	USEPA SW846 Method 8270C	TBD	TBD	TBD	TBD	0	TBD
TDS	USEPA SM18 Method 2540C	TBD	TBD	TBD	TBD	0	TBD
TAL Metals	USEPA SW846 Methods 6010B/7470A	TBD	TBD	TBD	TBD	0	TBD
TPH GRO	USEPA SW846 Method 8015B	TBD	TBD	TBD	TBD	0	TBD
TPH DRO	USEPA SW846 Method 8015B	TBD	TBD	TBD	TBD	0	TBD
TPH ORO	USEPA SW846 Method 8015B	TBD	TBD	TBD	TBD	0	TBD
PCBs	USEPA SW846 Method 8082	TBD	TBD	TBD	TBD	0	TBD
Nitrate	USEPA MCAWW Method 353.2	TBD	TBD	TBD	TBD	0	TBD
Sulfate	USEPA SW846 Method 9056	TBD	TBD	TBD	TBD	0	TBD
Chloride	USEPA SM19 Method 4500CL C	TBD	TBD	TBD	TBD	0	TBD

Notes:
USEPA = United States Environmental Protection Agency
MS = Matrix Spike
MSD = Matrix Spike Duplicate
VOC = Volatile Organic Compounds
SVOC = Semi-volatile Organic Compounds
TDS = Total dissolved solids
TAL = Target Analyte List
TPH = Total Petroleum Hydrocarbons
GRO = Gasoline Range Organics
DRO = Diesel Range Organics
ORO = Oil Range Organics
PCB = Polychlorinated Biphenyls
SW = USEPA Office of Solid Waste
SM = Standard Method
TBD = To be determined
ARAR = Applicable or Relevant and Appropriate Requirements
MCAWW = Methods for Chemical Analysis of Water and Wastes

[1] Determined by Phase I ARAR soil exceedences (maximum number of primary samples = 32)
[2] Duplicate samples will be collected at a minimum frequency of one for every 10 primary samples collected
[3] MS samples will be collected at a minimum frequency of one for every 20 primary samples collected
[4] MSD samples will be collected at a minimum frequency of one for every 20 primary samples collected
[5] Estimated, one trip blank will accompany every shipment of VOC samples

Table 6-7
Groundwater Sampling and Analysis for Sub-Basin 4
SWMU 183 RFI Work Plan
Holloman AFB, New Mexico
Nationview Project No. 8080014

Analysis	Method	Primary [1]	Duplicates [2]	MS [3]	MSD [4]	Trip blanks [5]	Total
VOC	USEPA SW846 Method 8260B	TBD	TBD	TBD	TBD	TBD	TBD
SVOC	USEPA SW846 Method 8270C	TBD	TBD	TBD	TBD	0	TBD
TDS	USEPA SM18 Method 2540C	TBD	TBD	TBD	TBD	0	TBD
TAL Metals	USEPA SW846 Methods 6010B/7470A	TBD	TBD	TBD	TBD	0	TBD
TPH GRO	USEPA SW846 Method 8015B	TBD	TBD	TBD	TBD	0	TBD
TPH DRO	USEPA SW846 Method 8015B	TBD	TBD	TBD	TBD	0	TBD
TPH ORO	USEPA SW846 Method 8015B	TBD	TBD	TBD	TBD	0	TBD
PCBs	USEPA SW846 Method 8082	TBD	TBD	TBD	TBD	0	TBD
Nitrate	USEPA MCAWW Method 353.2	TBD	TBD	TBD	TBD	0	TBD
Sulfate	USEPA SW846 Method 9056	TBD	TBD	TBD	TBD	0	TBD
Chloride	USEPA SM19 Method 4500CL C	TBD	TBD	TBD	TBD	0	TBD
Pesticides	USEPA SW846 Method 8081A	TBD	TBD	TBD	TBD	0	TBD
Herbicides	USEPA SW846 Method 8151A	TBD	TBD	TBD	TBD	0	TBD

Notes:
USEPA = United States Environmental Protection Agency
MS = Matrix Spike
MSD = Matrix Spike Duplicate
VOC = Volatile Organic Compounds
SVOC = Semi-volatile Organic Compounds
TDS = Total dissolved solids
TAL = Target Analyte List
TPH = Total Petroleum Hydrocarbons
GRO = Gasoline Range Organics
DRO = Diesel Range Organics
ORO = Oil Range Organics
PCB = Polychlorinated Biphenyls
SW = USEPA Office of Solid Waste
SM = Standard Method
TBD = To be determined
ARAR = Applicable or Relevant and Appropriate Requirements
MCAWW = Methods for Chemical Analysis of Water and Wastes

[1] Determined by Phase I ARAR soil exceedences (maximum number of primary samples = 10)
[2] Duplicate samples will be collected at a minimum frequency of one for every 10 primary samples collected
[3] MS samples will be collected at a minimum frequency of one for every 20 primary samples collected
[4] MSD samples will be collected at a minimum frequency of one for every 20 primary samples collected
[5] Estimated, one trip blank will accompany every shipment of VOC samples

Table 6-8
Groundwater Sampling and Analysis for Sub-Basin 8
SWMU 183 RFI Work Plan
Holloman AFB, New Mexico
Nationview Project No. 8080014

Analysis	Method	Primary [1]	Duplicates [2]	MS [3]	MSD [4]	Trip blanks [5]	Total
VOC	USEPA SW846 Method 8260B	TBD	TBD	TBD	TBD	TBD	TBD
SVOC	USEPA SW846 Method 8270C	TBD	TBD	TBD	TBD	0	TBD
TDS	USEPA SM18 Method 2540C	TBD	TBD	TBD	TBD	0	TBD
TAL Metals	USEPA SW846 Methods 6010B/7470A	TBD	TBD	TBD	TBD	0	TBD
TPH GRO	USEPA SW846 Method 8015B	TBD	TBD	TBD	TBD	0	TBD
TPH DRO	USEPA SW846 Method 8015B	TBD	TBD	TBD	TBD	0	TBD
TPH ORO	USEPA SW846 Method 8015B	TBD	TBD	TBD	TBD	0	TBD
PCBs	USEPA SW846 Method 8082	TBD	TBD	TBD	TBD	0	TBD
Nitrate	USEPA MCAWW Method 353.2	TBD	TBD	TBD	TBD	0	TBD
Sulfate	USEPA SW846 Method 9056	TBD	TBD	TBD	TBD	0	TBD
Chloride	USEPA SM19 Method 4500CL C	TBD	TBD	TBD	TBD	0	TBD
Perchlorate	USEPA SW846 Method 6860	TBD	TBD	TBD	TBD	0	TBD
Carbon-14	EERF Method C-01-1	TBD	TBD	TBD	TBD	0	TBD
Tritium	USEPA Method 906.0	TBD	TBD	TBD	TBD	0	TBD
Radium 226	USEPA Method 903.0 MOD	TBD	TBD	TBD	TBD	0	TBD
Radium 228	USEPA Method 904 MOD	TBD	TBD	TBD	TBD	0	TBD

Notes:
USEPA = United States Environmental Protection Agency
MS = Matrix Spike
MSD = Matrix Spike Duplicate
VOC = Volatile Organic Compounds
SVOC = Semi-volatile Organic Compounds
TDS = Total dissolved solids
TAL = Target Analyte List
TPH = Total Petroleum Hydrocarbons
GRO = Gasoline Range Organics
DRO = Diesel Range Organics
ORO = Oil Range Organics
PCB = Polychlorinated Biphenyls
EERF = Eastern Environmental Radiation Facility
MOD = Modified
SW = USEPA Office of Solid Waste
SM = Standard Method
TBD = To be determined
ARAR = Applicable or Relevant and Appropriate Requirements
MCAWW = Methods for Chemical Analysis of Water and Wastes

[1] Determined by Phase I ARAR soil exceedences (maximum number of primary samples = 6)
[2] Duplicate samples will be collected at a minimum frequency of one for every 10 primary samples collected
[3] MS samples will be collected at a minimum frequency of one for every 20 primary samples collected
[4] MSD samples will be collected at a minimum frequency of one for every 20 primary samples collected
[5] Estimated, one trip blank will accompany every shipment of VOC samples

Table 6-9
Groundwater Sampling and Analysis for Sub-Basin 9
SWMU 183 RFI Work Plan
Holloman AFB, New Mexico
Nationview Project No. 8080014.01

Analysis	Method	Primary [1]	Duplicates [2]	MS [3]	MSD [4]	Trip blanks [5]	Total
VOC	USEPA SW846 Method 8260B	TBD	TBD	TBD	TBD	TBD	TBD
SVOC	USEPA SW846 Method 8270C	TBD	TBD	TBD	TBD	0	TBD
TDS	USEPA SM18 Method 2540C	TBD	TBD	TBD	TBD	0	TBD
TAL Metals	USEPA SW846 Methods 6010B/7470A	TBD	TBD	TBD	TBD	0	TBD
TPH GRO	USEPA SW846 Method 8015B	TBD	TBD	TBD	TBD	0	TBD
TPH DRO	USEPA SW846 Method 8015B	TBD	TBD	TBD	TBD	0	TBD
TPH ORO	USEPA SW846 Method 8015B	TBD	TBD	TBD	TBD	0	TBD
PCBs	USEPA SW846 Method 8082	TBD	TBD	TBD	TBD	0	TBD
Nitrate	USEPA MCAWW Method 353.2	TBD	TBD	TBD	TBD	0	TBD
Sulfate	USEPA SW846 Method 9056	TBD	TBD	TBD	TBD	0	TBD
Chloride	USEPA SM19 Method 4500CL C	TBD	TBD	TBD	TBD	0	TBD
Carbon-14	EERF Method C-01-1	TBD	TBD	TBD	TBD	0	TBD
Tritium	USEPA Method 906.0	TBD	TBD	TBD	TBD	0	TBD
Radium 226	USEPA Method 903.0 MOD	TBD	TBD	TBD	TBD	0	TBD
Radium 228	USEPA Method 904 MOD	TBD	TBD	TBD	TBD	0	TBD

Notes:
USEPA = United States Environmental Protection Agency
MS = Matrix Spike
MSD = Matrix Spike Duplicate
VOC = Volatile Organic Compounds
SVOC = Semi-volatile Organic Compounds
TDS = Total dissolved solids
TAL = Target Analyte List
TPH = Total Petroleum Hydrocarbons
GRO = Gasoline Range Organics
DRO = Diesel Range Organics
ORO = Oil Range Organics
PCB = Polychlorinated Biphenyls
EERF = Eastern Environmental Radiation Facility
MOD = Modified
SW = USEPA Office of Solid Waste
SM = Standard Method
TBD = To be determined
ARAR = Applicable or Relevant and Appropriate Requirements
MCAWW = Methods for Chemical Analysis of Water and Wastes

[1] Determined by Phase I ARAR soil exceedences (maximum number of primary samples = 4)
[2] Duplicate samples will be collected at a minimum frequency of one for every 10 primary samples collected
[3] MS samples will be collected at a minimum frequency of one for every 20 primary samples collected
[4] MSD samples will be collected at a minimum frequency of one for every 20 primary samples collected
[5] Estimated, one trip blank will accompany every shipment of VOC samples

Table 10-1
Roles and Responsibilities of Project Team Members
SWMU 183 RFI Work Plan
Holloman AFB, New Mexico
NationView Project No. 8080014

Name	Project Title/Assigned Role	Phone Numbers
Mr. David Scruggs	HAFB Representative / NMED Point of Contact	Office: (575) 572-5395
Mr. Layi Oyelowo	AFCEE Directing Authority	Office: (210) 536-6306
Ms. Carol Wies	USACE - Albuquerque District Program Manager	Office: (505) 342-3477
Mr. David Martin	NationView Corporate Sponsor	Cell: (205) 908-0731
Mr. Frank Gardner, PG	HAFB Program Manager	Cell: (303) 386-6454
Mr. Jim Moore, PG	Project Manager	Cell: (303) 929-4840
Mr. Dustin McNeil, PG	Project Geologist / Site Manager	Cell: (303) 895-1963
Mr. Tony Lucero	Environmental Specialist	Cell: (575) 921-1899
Mr. Craig McGriff	Project GIS Specialist / Environmental Technician	Cell: (205) 910-0712
Mr. Zack Beck, PG	Project Geologist	Cell: (575) 921-1736
Mr. John Hymer	Site Safety and Health Officer	Cell: (575) 491-9171
Ms. Marcia Olive	Project Chemist	Office: (303) 597-2450
Ms. Corey Green	QA/QC Manager	Office: (205) 918-4002
Ms. Sally Smith	Health and Safety Manager	Office: (205) 918-4032

Notes:
HAFB = Holloman Air Force Base
NMED = New Mexico Environment Department
AFCEE = Air Force Center for Engineering and the Environment
USACE = United States Army Corps of Engineers
GIS = Geographic Information System
H&S = Health and Safety
PG = Professional Geologist
QA = Quality Assurance
QC = Quality Control

ATTACHMENT A

FINAL TRIAD APPROACH DYNAMIC WORK PLAN NOTICE OF DISAPPROVAL LETTER (HWB-HAFB-08-003) AND RESPONSES TO NMED COMMENTS

NEW MEXICO ENVIRONMENT DEPARTMENT

Hazardous Waste Bureau

BILL RICHARDSON
Governor

DIANE DENISH
Lieutenant Governor

2905 Rodeo Park Drive East, Building 1
Santa Fe, New Mexico 87505-6303
Phone (505) 476-6000 Fax (505) 476-6030
www.nmenv.state.nm.us

RON CURRY
Secretary

JON GOLDSTEIN
Deputy Secretary

CERTIFIED MAIL - RETURN RECEIPT REQUESTED

May 14, 2009

Mr. David Scruggs, Chief
Environmental Restoration Program
49 CES/CEVR
550 Tabosa Ave.
Holloman AFB, NM 88330-8458

SUBJECT: NOTICE OF DISAPPROVAL: FINAL TRIAD APPROACH DYNAMIC WORK PLAN, RCRA FACILITY INVESTIGATION, SWMU 183 - BASEWIDE SEWER SYSTEM, HOLLOMAN AFB, NEW MEXICO, FEBRUARY 2008
EPA ID#: NM6572124422
HWB-HAFB-08-003

Dear Mr. Scruggs:

The New Mexico Environment Department (NMED) has reviewed the subject Work Plan from Holloman Air Force Base (the Permittee), which was submitted for the investigation of potential hazardous waste releases at Solid Waste Management Unit (SWMU) 183 – Basewide Sewer System. NMED has determined that the Work Plan cannot be approved at this time, as revisions are necessary. The Permittee must address the following deficiencies before the NMED can make a final determination regarding approval.

GENERAL COMMENTS

1. Figures/maps provided in work plans must list the coordinate system, projection, and each datum (e.g., Transverse Mercator Projection, New Mexico State Plane Coordinate System, Central Zone, 1983 North American Horizontal Datum, 1983 North American Vertical Datum). The Permittee must revise all figures to satisfy these requirements.

2. All tables provided in work plans and reports must explain all abbreviations, quality flags, and special formatting (e.g., LS, special colors used, **bold** type used to communicate specific information, J = ?, B = ?) in the footnotes. The test methods must be listed and legible, spelling errors corrected, and sample dates provided on the tables. The Permittee must revise all tables to satisfy these requirements. Refer to Comments 6, 10, 13, 23, 28, 29, 30, 31, 40, 41, 42, 44, 45, 46, and 47 for specifics.

3. The Work Plan, in places, contains complete citations and references to other pertinent documents, such as other Holloman Air Force Base (HAFB) documents (e.g, *Final Basewide Quality Assurance Project Plan* (QAPP), *Holloman Air Force Base, New Mexico*, November 2003), Standard Operating Procedures (SOPs), company-specific SOPs (e.g., Bhate and Stone), and methods. Many other citations are incomplete. The text must include complete citations and references (e.g., author, publisher, publication date [month, year], method number). All references, including those listed in figures and tables must be included in the References section. With regard to HAFB SOPs and company-specific procedures, the first SOP/procedure listing must include the complete title, rather than just the number. All citations and references must exactly match the listing in the HAFB QAPP. Copies of some company-specific procedures do not accompany the Work Plan; the Permittee must provide copies of all company SOPs. All methods listed in the work plan, including the tables and figures, must have complete references. For example, citation of methods from the American Society for Testing and Materials (ASTM) must include the publication year, and methods from the U.S. Environmental Protection Agency (USEPA) must specify source (e.g., SW846) and indicate the version or revision number of the method. Refer also to Comments 12, 13, 14, 15, 16, 18, 19, 20, 24, 36, and 38 for specific examples.

4. Spelling errors (e.g., augur, benzo[a]pyrne) must be corrected in the Work Plan text, figures, and all appendices.

5. The Permittee must include comparison with the soon-to-be established facility background levels, in addition to the following criteria for both groundwater and soil: appropriate values as specified by the New Mexico Water Quality Control Commission (NMWQCC), the USEPA Region 6 Maximum Contaminant Levels (MCLs), the *New Mexico Environment Department TPH Screening Guidelines* (October 2006), the *New Mexico Environment Department Technical Background Document for Development of Soil Screening Levels* (SSLs) (Revision 4.0, June 2006), the USEPA Region 6 Screening Action Levels (SALs), and the USEPA *Soil Screening Guidance for Radionuclides: Technical Background Document* (October 2000).

   Because the facility background study report may not be completed before the response to this NOD is due, the Permittee must, at a minimum, include reference to the soon-to-be established facility background levels within the appropriate sections, figures, and tables of this Work Plan. The Permittee must actively use the established facility background levels in the investigation report. Refer also to Comments 10, 23, 28, and 31.

SPECIFIC COMMENTS

6. **Plates 1 and 2; Table 3-1; and Section 6.1.6, pages 6-11 through 6-13, all**

   Plate 1, Plate 2, and Table 3-1 specify 252 sample collection locations for Stage 1, Sewer Release Identification. Section 6.1.6 provides the strategy employed to select the locations. The Permittee must revise the number of locations to reduce the number based upon the following location criteria:

   - From sewer pipe junctions
   - Down gradient from suspected or known release areas
   - Down gradient from SWMUs with suspected or known releases
   - From places where two pipes of different diameters or materials join

   The Permittee may form combinations of criteria to limit the number of sample collection locations. The Permittee must design the sample collection plan to emphasize areas of suspected or known releases. Refer also to Comment 42.

7. **Plates 1 and 2**

   Plates 1 and 2 provide incomplete and confusing information. The Permittee must revise both plates to:

   - Remove from the Plates those SWMUs and AOCs that do not currently require corrective action, as listed in Table B of the facility's Operating Permit
   - Clearly define the grey numbers; blue numbers; pink numbers; black numbers; and the bold-faced, black numbers; and all abbreviations

   Plate 2 shows SWMU 75. However, neither Table A nor Table B of the facility's Operating Permit lists SWMU 75 because SWMU 75 is the same as the permitted Container Storage Unit and should not be referred to as a SWMU. Thus, SWMU 75 does not exist. If the Permittee intended SWMU 75 to signify another SWMU, the Permittee must correct this typographical error, provide the correct unit number, and correct the information on Plate 2. If the Permittee intended to refer to the permitted Container Storage Unit, then remove the SWMU 75 label from the plates. Refer also to Comment 13.

8. **Section 1.7, page 1-7, 2nd paragraph, 1st sentence, Section 3.1, page 3-1, 1st paragraph, 2nd sentence, and Section 5.2, page 5-1, 1st paragraph, 1st bullet point**

   The Work Plan provides inconsistent information regarding the length of the sewer system, as shown in the following excerpts:

   - **Section 1.7, page 1-7, 2nd paragraph, 1st sentence:** "The SWMU 183 site (see Figure 1-2 and Plates 1 and 2) is unique in that, rather than being a waste management system of limited to moderate size in a singular physical location, it is a subsurface feature comprised of approximately 22 miles of sewer line that serves the entire developed portions of the Base."
   - **Section 3.1, page 3-1, 1st paragraph, 2nd sentence:** "The systems consists of over 165,000 feet [or 31.25 miles] of sewer lines, that on average, are located

approximately 6 feet bgs."

- **Section 5.2, page 5-1, 1st paragraph, 1st bullet point:** "Approximately 22 miles of sewer line constructed of various materials"

The Permittee must revise the text to list the correct and consistent sewer system length.

9. **Section 1.7, page 1-7, 2nd paragraph, 2nd sentence and Section 5.2, page 5-1, 1st paragraph, 2nd and 3rd bullet points**

The sentences and phrases are inconsistent with respect to the number of active manholes and pumping stations, as shown in the following:

- **Section 1.7, page 1-7, 2nd paragraph, 2nd sentence:** "In addition to the sewer lines, the system includes over 800 active and approximately 100 abandoned manholes, approximately 10 lift (pumping) stations, and hundreds of variably contributing sources distributed throughout the entire Base, including direct discharges from industrial/operational facilities and domestic structures, as well as pass-through discharges from additional waste management systems such as oil/water separators."
- **Section 5.2, page 5-1, 1st paragraph, 2nd bullet point:** "Over 500 active and approximately 100 abandoned manholes"
- **Section 5.2, page 5-1, 1st paragraph, 2nd bullet point:** "Approximately 20 lift (pumping) stations and force mains"

The Permittee must revise the text to list the correct and consistent number of active manholes and lift (pumping) stations.

10. **Section 1.9, page 1-8, 1st paragraph, entire bullet list; Section 5.2, page 5-2, 1st bullet list; Section 6.1.3.1, pages 6-3 through 6-5, including all subsections; Section 6.1.3.2, page 6-5, all; Section 6.1.3.4, page 6-6, 1st paragraph, bulleted list; Section 6.1.5.1, pages 6-8 through 6-9, all; Section 6.1.5.2, page 6-9, all; Section 6.1.5.3, page 6-10, all; Section 6.1.5.4, page 6-11, all; Figure 6-1; Table 3-2; Table 6-1; and Section 3.4, page 3-2, 1st paragraph, 1st sentence**

The listed sections, figure, and tables contain information regarding chemicals, pollutants of concern (POCs), proposed analytes, and target or Applicable or Relevant and Appropriate Requirement (ARAR) action level criteria. The Table Attachment to this Notice of Disapproval (NOD) summarizes the information. As shown in the Table Attachment, the Work Plan inconsistently lists and describes the chemicals, POCs, analytes, and target levels. For example, sulfate appears in one section that describes released chemicals or POCs; sulfate does not appear on any proposed analyte list. In another case, the Work Plan lists moisture content as a proposed soil analyte; however, this appearance occurs in the section describing target levels and does not appear in any other part of the Work Plan.

The Table Attachment summarizes the approach to decision-making processes related to the proposed analytes, as proposed by the Permittee. The Table Attachment demonstrates the fact that the decision-making processes are not well documented. The Work Plan mentions that released chemicals or POCs are tabulated in a section or table. Some chemicals or

POCs, such as antifreeze or sulfides are briefly introduced, but the Work Plan does not discuss them any further. Rather, the Work Plan merely provides the generic, blanket proviso in Section 3.4, which states the following:

> "Based on the above information [the diversity of compounds, variability in their chemical formulation, and complex and extensive intermixing environment of the sewer], and the logistical and cost impracticability of sampling and analyzing for every class of POC at every location, a subset of these POCs will be used as indicators to identify whether a release to the environment has occurred in a given location."

This statement does not provide a reasonable, clear, discussion of the elimination of POCs. The Work Plan leaves the reader to make assumptions because it does not name POCs as analytes and because it does not establish a clear relationship between the generic POC terms (e.g., "oil and grease") and any proposed analytes or analytical group (e.g., TPH). While NMED does not object to the use of indicator parameters, the Permittee must provide complete and sound justification for the use of each indicator parameter.

The Work Plan fails to adequately develop a clear connection between the proposed analytes and their target levels. The Work Plan refers to these as Applicable or Relevant and Appropriate Requirement (ARAR) action level criteria. The ARAR action level criteria are also referred to as trigger levels, target levels, and action levels. As shown in the Table Attachment, the Work Plan does not list or describe the target levels or ARARs for semi-volatile organic compounds (SVOCs) for either soil or groundwater, in spite of its inclusion on the list of POCs, released chemicals, and list of analytes. The Table Attachment demonstrates that the Work Plan discusses the soil geotechnical parameters within the section describing the target levels or ARARs, despite the absence of target levels for geotechnical parameters. Additionally, the Work Plan does not contain any discussion of soon-to-be-established facility background concentrations.

The Permittee must revise all relevant portions of the Work Plan to include clear, logical, consistent discussion of historical released chemicals, POCs, proposed analytes, target levels, and facility background concentrations. This discussion must include a clear map of progress from a released chemical to an analyte or analyte group to a target/action/trigger level. The discussion must include a scientific basis for the exclusion of any POC from the analyte list. Any listed POC, whether as an individual chemical or a general chemical group, must be clearly connected to the proposed analyte(s). Any proposed analyte must also have a target level and facility background concentrations, where established.

The Permittee must revise the proposed analytical suite for metals from Resource Conservation and Recovery Act (RCRA) 8 metals to the target analyte list (TAL) metals and add sulfate and chloride. The Permittee must revise the Work Plan, including appropriate tables and appendices, to include laboratory detection limits, quality assurance (QA) and quality control (QC) parameters, target levels, and facility background concentrations for TAL metals, sulfate, chloride, and any other added analytes.

Comments 5, 20, 23, 28, 29, 30, 31, 32, 36, 37, 39, 40, 41, 42, 43, 44, and 45 provide specific example on various aspects of this comment.

11. **Section 1.11.2, page 1-10, 2nd paragraph, 1st sentence**

The sentence states, "[t]he primary findings of the study were that some of the sewer exhibited system structural and hydraulic problems, but that 'the most significant system problem appeared to be an excessive amount of steady inflow into the system'. [emphasis added]" The Permittee must revise the sentence to correct the grammatical error.

12. **Section 1.11.3, page 1-11, 1st paragraph, 1st sentence**

The sentence states, "[a]n RFI [RCRA Facility Investigation Report] Work Plan was prepared in response to a USEPA policy issuance, wherein sewer systems were to be treated and characterized as SWMUs." The Permittee must revise the sentence to include the policy reference and must list the full reference in the list of References. Refer to Comment 3.

13. **Section 1.11.5, page 1-12, 2nd paragraph, 2nd sentence and 3rd paragraph, 2nd sentence; Section 1.11.5, page 1-12, 2nd paragraph, 3rd bullet point; Section 5.2, page 5-1, 1st paragraph, 5th bullet point; Table 1-1, all; and References**

Section 1.11.5, Section 5.2, and Table 1-1 provide inconsistent information regarding the permitted status of SWMUs.

First, a discrepancy appears in Section 1.11.5 regarding the timing of the inquiry into the permitted status of the oil water separator (OWS) SWMU sites, as shown in the following excerpts:

- **Section 1.11.5, page 1-12, 2nd paragraph, 2nd sentence:** "According to permit Table A (i.e., sites requiring corrective action) and permit Table B (i.e., sites requiring No Further Action), the following is the status of SWMU sites as of September 30, 2005."
- **Section 1.11.5, page 1-12, 2nd paragraph:** "Table 1-1 of this Work Plan lists each of the OWS SWMU sites and their current (2007) permitted status."

Table 1-1 lists the number of SWMUs requiring no further action and the specific number of OWS in a manner inconsistent with similar information described in Section 1.11.5 and Section 5.2. The following excerpts show these discrepancies:

- **Table 1-1:** The "Table B" portion of Table 1-1 contains duplicate listings of various SWMUs. The table indicates 38 OWS exist at HAFB and 33 SWMU sites require no further action.
- **Section 1.11.5, page 1-12, 2nd paragraph, 3rd bullet point:** "Table B: 36 sites are listed as requiring No Further Action (NFA)."
- **Section 5.2, page 5-1, 1st paragraph, 5th bullet point:** 42 OWS

The Permittee must revise Section 1.11.5, Section 5.2, and Table 1-1 to contain consistent information regarding the number of OWS sites at HAFB. If a distinction exists between

OWS sites, in general, and OWS SWMU sites, then the Permittee must provide a detailed discussion of this distinction in Section 1.11.5 and as a footnote to Table 1-1. The Permittee must also revise Table 1-1 to contain only individual listings of each SWMU. If the information to be communicated is such that duplicate listings are necessary, the Permittee must provide an explanation for this duplicate listing in the table footnotes. Furthermore, in Table 1-1, the Permittee must include definitions for all abbreviations. The Permittee must include the reference to the HAFB RCRA Operating Permit (e.g., proper title, permit number, year of publication.) in all appropriate sections, sentences, phrases, and tables. The Permittee must indicate the most recent update to the status of the permitted units (e.g., Notification letter). Refer also to Comments 3 and 7.

14. **Section 2.3, pages 2-1 through 2-3, all and Figures**

The section describes the surface water and hydrology and includes various arroyos and surface water features by name. In Section 2.3, the last sentence beginning on page 2-1 states, "HAFB is dissected by several southwest trending arroyos that control the surface drainage." However, none of the figures included with the Work Plan depict any of these features. The Permittee must revise the Work Plan to include a figure illustrating the described features. The Permittee must also revise Section 2.3 to include reference to the new figure and update the list of figures. Also refer to Comments 3 and 17.

15. **Section 2.5, page 2-4, 2nd paragraph, last two sentences and Section 4.1, page 4-1, 2nd paragraph, all**

The following sections do not contain references for the referenced guidelines:

- **Section 2.5, page 2-4, 2nd paragraph, last two sentences:** "TDS [total dissolved solids] concentrations greater than 10,000 mg/L [milligrams per liter] exceed the New Mexico Water Quality Control Commission (WQCC) limit as potable water and thus, the groundwater beneath HAFB has been designated as unfit for human consumption. Likewise, USEPA guidelines have identified the groundwater as Class IIIB water source, characterized by TDS concentrations exceeding 10,000 mg/L."
- **Section 4.1, page 4-1, 2nd paragraph, all:** "There are no supply wells on the Base because the preponderance of groundwater beneath HAFB contains water with an average TDS concentration greater than 10,000 mg/L (see Figure 4-1) which exceeds the New Mexico WQCC limit as potable water and thus, the groundwater beneath HAFB has been designated as unfit for human consumption. Likewise, USEPA guidelines have identified the groundwater as a Class IIIB water source, characterized by TDS concentrations exceeding 10,000 mg/L."

The Permittee must revise these sections and the list of References to include the policies and guidelines specified. Refer also to Comment 3.

16. **Section 2.5, page 2-4, 3rd paragraph, last sentence**

The sentence states, "[t]he only production water well, used for livestock irrigation, is located approximately 7 miles southwest of HAFB." According to the U.S. Geological Survey, 7.5

minute topographic quadrangle, "Holloman," two wells exist approximately two miles east-northeast of HAFB. The Permittee must indicate the source of the information listed in the cited sentence. The Permittee must consult additional sources of information, such as the New Mexico Office of the State Engineer, and determine the location of nearby wells. The Permittee must modify the paragraph to include the new, verified information and cite the source(s) of information. The Permittee must also include these cited sources in the list of References. Refer also to Comment 3.

17. **Section 2.6, page 2-5, 1st paragraph, last sentence and Section 2.3, pages 2-1 through 2-3, all**

Section 2.6 states, "[t]his soil type is located only across the main drainage area for the installation." Section 2.3 discusses the Surface Water and Hydrology for HAFB and the surrounding area and includes the names of various surface water features. However, Section 2.3 does not designate any of the named surface water features as the "main drainage area." Without a map showing the surface water features, the disparate pieces of information do not lead to a coherent picture of the HAFB surface water regime. The Permittee must revise Sections 2.3 and 2.6 to specify the name of the "main drainage area." Refer also to Comment 14.

18. **Section 4.4, page 4-2, 2nd sentence**

The sentence states, "[t]his information was generated in 2005 by Bhate during development of the EA [Environmental Assessment] for the wastewater utility privatization evaluation. [emphasis added]" Neither the section nor the list of References contains a citation for this work. The Permittee must revise the section and the list of References to include the reference for this work. Refer also to Comment 3.

19. **Section 4.4.2.4, page 4-4, 2nd sentence**

The section states, "[b]ird censuses are ongoing at HAFB and a complete list of birds can be found in the HAFB Integrated Natural Resource Management Plan (INRMP)." Neither the section nor the list of References contains a citation for this document. The Permittee must revise the section and the list of References to include the reference for this document. Refer also to Comment 3.

20. **Section 5.2, page 5-3, 2nd paragraph**

The second paragraph of Section 5.2 provides general geochemical information about potential contaminants. The paragraph states the following:

> "Metals, SVOCs, POLs [petroleum, oil, and lubricants], and oil and grease have a low degree of mobility in the subsurface. The presence of these classes of POCs [pollutants of concern] is likely to be limited to the soils in the vicinity of the leak. Nitrate is created by the nitrification of ammonium in the sewer line where reducing conditions prevail. Nitrate is not sorbed significantly to soils and will likely only be found in the pore water in the unsaturated zone. Nitrate will be likely to migrate to the water table and then with groundwater flow if released in sufficient quantities.

> Similarly, chloride is quite mobile in the environment, but chloride is naturally abundant in the natural subsurface environment at HAFB. Phosphate is highly retarded by sorption both above and below the water table is not expected to migrate far unless a sustained release occurs for a long period of time."

This portion of the conceptual site model discussion provides a limited description of the geochemistry of the POCs. The paragraph touches on changes in redox conditions within the sewer line and outside the sewer line. The discussion focuses solely on ammonium and nitrate; however, changes in redox conditions can significantly affect other POCs. For example, sulfide can experience rapid oxidation. Indeed, using field testing methods, it is difficult to obtain a stable, reliable measurement of sulfide concentration due to the rate of oxidation, assuming that sulfide is part of the list of analytes. It seems prudent that the list of POCs should include sulfate, while keeping in mind that the natural background groundwater may already have high sulfate concentrations. The Permittee must address this issue with a thorough discussion of the changes in redox conditions, the oxidation of sulfide, and a means of determining the sulfide concentrations, with the understanding that gypsum ($CaSO_4$) is prevalent at the site. The description of phosphate geochemistry also reveals the absence of continuity in the list of POCs versus the list of analytes. Refer also to Comment 10.

21. **Section 6.1, pages 6-1 through 6-13, all**

The first sentence of the first paragraph (page 6-1) states, "[t]he sampling strategy for the SWMU 183 Triad RFI has been designed according to the concepts and guiding principles of the USEPA's Triad Approach, specifically for dynamic work strategies." The sampling strategy proposes the use of various field screening methods. However, the Work Plan did not include any contingency procedures in the event that the proposed field methods do not perform as expected and provide useful data. The Permittee must revise the Work Plan to include alternate field techniques, a discussion of testing of the field techniques prior to mobilization to determine whether the proposed technique(s) will provide appropriate data, and a discussion of environmental/chemical conditions under which a particular field technique (e.g. immunoassay) can be used with confidence. Discussion of the operating limits of various field techniques will aid in the determination of the collected analytical data usability, particularly considering that the conditions at HAFB and within the sewer system (e.g., high total dissolved solids, high ion concentrations, redox extremes) have the potential to affect the analyses and the analytical results. The Permittee must revise the section to include a pre-test period and contingency plans in the event that a chosen method does not produce reproducible and reliable results.

22. **Section 6.1, page 6-2, 2nd bullet point; Section 6.1.4, page 6-8, 1st paragraph, 1st sentence; Section 6.2.1, page 6-13, 1st paragraph, 2nd bullet point; Section 6.2.3, pages 6-16 through 6-18, all; Section 7.3.1.1, page 7-4, all; and Section 7.3.2.1, page 7-5, 2nd bullet point**

The Work Plan describes the installation of temporary monitoring wells for groundwater sampling. The following selected excerpts illustrate the planned installation and removal of temporary wells:

- **Section 6.1, page 6-2, 2nd bullet point:** "Groundwater samples will be collected from: Temporary 1-inch PVC [polyvinyl chloride] pre-pack well screens installed via DPT [direct push technology] in areas where groundwater is located less than 25 ft bgs [and] two-inch outside diameter PVC wells installed via HSA [hollow stem auger] where groundwater is located at depths at, or greater than, 25 ft bgs where the practicable use of DPT is exceeded."
- **Section 6.1.4, page 6-8, 1st paragraph, 1st sentence:** "As indicated in Section 6.1, shallow groundwater samples will be collected from temporary 1-inch PVC pre-pack well screens installed via DPT and deeper groundwater samples will be collected from 2-inch outside diameter PVC wells installed via HAS technology."
- **Section 6.2.1, page 6-13, 1st paragraph, 2nd bullet point:** "Groundwater: a.) DPT-installed temporary wells [and] b.) HSA-installed temporary wells."
- **Section 6.2.3, pages 6-16, 1st paragraph, 2nd through 4th sentences:** "Groundwater samples will be collected from small diameter temporary wells installed through the DPT soil core holes or HSA soil boreholes as described in the preceding sections. In areas of the site where the depth to groundwater is less than 25 feet bgs (e.g., south of Dezonia Road) temporary wells will be installed through the outer casing of the DT325 dual tube coring tool. Where the water table is deeper than 25 feet bgs the temporary wells will be installed through the HSA auger casing advanced using a conventional rotary drill rig."
- **Section 6.2.3.1, page 6-17, last paragraph:** "Once sampling is completed, the well will be pulled out if possible and the hole will be abandoned in accordance with the procedures described in Bhate's SOP B-10."
- **Section 6.2.3.2, page 6-17, last paragraph:** "Once sampling is completed, the well will be pulled out if possible and the hole will be abandoned in accordance with the procedures described in Bhate's SOP B-10."
- **Section 7.3.1.1, page 7-4, all:** "All soil samples collected from a temporary well boring will have the temporary well designation followed by the sample ending depth (groundwater samples will not contain a sample depth designator)."
- **Section 7.3.2.1, page 7-5, 2nd bullet point:** "A groundwater sample collected for offsite analyses, from a temporary well, at pre-designated sampling location #52: SR052-TW-OFF"

The newly constructed wells must remain in place until the NMED approves their removal. The Permittee must protect the temporary well from surface water infiltration (runon/runoff). The Permittee must alter all appropriate sections to include this information. Also refer to Comment 35.

23. **Section 6.1, page 6-2, last paragraph, last sentence; Section 6.1.5.2, page 6-9, 2nd paragraph, 1st sentence; Section 6.2.2.1, page 6-15, last paragraph, 1st sentence; Figure 6-1; Table 6-1; Table 6-2; and Section 6.3.2.1.2; page 6-23, 1st full paragraph, 1st sentence**

Together, the text in the sections, the information in the figure, and the table descriptions

inconsistently describe sample analyses. The following excerpts illustrate these inconsistencies:

- **Section 6.1, page 6-2, last paragraph, last sentence:** "Offsite analyses will be performed for additional analytes where onsite results indicate a potential release location, or at a 10% frequency for locations whose onsite results indicate no release has occurred."
- **Section 6.1.5.2, page 6-9, 2nd paragraph, 1st sentence:** "Where onsite analytical or screening results indicate contaminants in soils at concentration levels below the applicable SSLs or nitrate trigger level, 10 percent of the samples will be submitted for offsite analysis of SVOCs, RCRA 8 Metals, and radionuclides."
- **Section 6.2.2.1, page 6-15, last paragraph, 1st sentence:** "At 10% of the locations where screening analyses results indicate no release has occurred, samples will be collected for the full analyte suite as described in Section 6.1.5.2 of this Work Plan."
- **Figure 6-1** indicates that the concentrations of volatile organic compounds (VOCs), nitrate, polyaromatic hydrocarbons (PAHs), and total petroleum hydrocarbons (TPH), as well as general radionuclide measurements will occur onsite. Figure 6-1 further indicates that 10% of these samples with concentrations and counts less than the reporting limit or the soon-to-be-established facility background concentrations will proceed for off-site analyses and fulfill quality control requirements.
- **Table 6-1** does not list these analytes as off-site or as definitive data. These analytes are not listed in Stage 2 – Expanded Analyte List Analysis as presented in Figure 6-1 or Table 6-1.
- **Table 6-2** does not list these analytes within the off-site laboratory parameters. For example, Section 6.3.2.1.2 states, "[a]ll samples having positive detections of PAHs above the RL, and 10% of the total PAH samples with results below the RL, will be submitted to the offsite laboratory facility for definitive analyses to identify and quantify any specific PAH compounds." Yet, Table 6-2 does not specify PAHs in the off-site laboratory analyte list.

The Permittee must revise the Work Plan to include the off-site laboratory analyses, with definitive data, for 10% of samples with results below the RL or the soon-to-be-established Facility background concentrations (as appropriate) for all analytes of Stage 1, including VOCs, nitrate, sulfate, chloride, PAH, TPH, radionuclides, and TAL metals to verify the screening results. Refer also to Comments 5 and 10.

24. **Section 6.1.1, page 6-3, bullet at top of page**

The text for the bullet states, "[i]mplement vapor intrusion evaluation based on USEPA guidance where existing buildings or areas of planned future development might be at risk of VOC vapor intrusion." The sentence does not indicate a reference for the USEPA guidance. The Permittee must revise the section and the list of References to include a proper citation for this document. See Comment 3.

25. **Section 6.1.5.3, page 6-10, 3rd paragraph, 4th and 6th sentences; Section 6.1.5.3, page 6-10, 4th paragraph, 1st sentence; Section 7.3.1.2, page 7-4, 1st sentence; Figure 6-2; and Figure 6-3**

Section 6.1.5.3, Section 7.3.1.2, Figure 6-2, and Figure 6-3 describe the contaminant delineation for soil and groundwater. However, the sections and figures inconsistently describe the contaminant delineation plan, as the following excerpts indicate:

- **Section 6.1.5.3, page 6-10, 3rd paragraph, 4th sentence:** "Sampling locations along each transect will be at a 50 foot spacing and will be initiated in the transect center zone, with subsequent sampling locations located horizontally toward each of the transect's two flanks."
- **Section 6.1.5.3, page 6-10, 3rd paragraph, 6th sentence:** "Sampling locations within the 100 foot downgradient transect will also be at a 50 foot spacing, initiated in the transect center zone."
- **Section 6.1.5.3, page 6-10, 4th paragraph, 1st sentence:** "Soil contamination will be delineated using and orthogonal grid-based strategy, wherein, soil samples will be collected at a 50 ft spacing from locations oriented orthogonally (4 perpendicular azimuths) centered on the original pre-designated sampling location of concern."
- **Section 7.3.1.2, page 7-4, 1st sentence:** "As described in Section 6.1 of this Work Plan, soil contamination in Identified Release Areas will be delineated using an orthogonal grid-based strategy, wherein, soil samples will be collected at a 50 ft spacing from locations oriented orthogonally (4 perpendicular azimuths) centered on the original pre-designated sampling location of concern."
- **Figure 6-2:** According to Figure 6-2, the groundwater samples will be collected using 25-foot spacing.
- **Figure 6-3:** two flow diagram boxes in Figure 6-3 indicate the soil samples will be collected using 20-foot spacing.

The Permittee must modify Section 6.1.5.3, Section 7.3.1.2, and Figure 6-3 to state that soil and groundwater samples will be collected at 25-foot intervals.

26. **Section 6.1.5, pages 6-8 through 6-11, all and Section 6.2.2, pages 6-14 through 6-16, all**

Both sections provide information regarding soil sampling. Neither section indicates whether the logging of soils will occur during drilling activities. The Permittee must clearly state within the Work Plan that soil logs will be recorded and provide a citation to the appropriate SOP.

27. **Section 6.2.2.1, page 6-14, last paragraph, 1st and last sentences**

The Permittee must clarify whether the word "round" actually refers to "Stage," in the following sentences:

- **First sentence:** "The first round of samples will be collected using a Geoprobe® MacroCore® soil coring tool driven by a Geoprobe Systems® 66 series rig or equivalent as described in HAFB SOP-4."

- **Last Sentence**: "This second round of sampling will be accomplished using a Geoprobe Systems® DT325 Dual Tube Sampling System (coring tool) in accordance with the Standard Operating Procedure (Geoprobe Systems® Technical Bulletin MK3138) in the Basewide QAPP Addendum (in Appendix A of this Work Plan)."

If "round" is intended to indicate "Stage," the Permittee must replace the words "round" with the word "Stage." If the word "round" is intended to communicate separate activities within a particular Stage, then the Permittee must revise this section and all other relevant sections, figures, and tables to clearly communicate separate activities within a Stage.

28. **Section 6.3.1, page 6-20, 1st and 2nd paragraphs, all; Figure 6-1; and Table C-1 of Appendix C**

Section 6.3.1 and Figure 6-1 describe the process to evaluate whether a release has occurred. The Work Plan does not include comparison to the soon-to-be-established facility background concentrations, as illustrated in the following excerpts:

- **Section 6.3.1, page 6-20, 1st paragraph**: "The analytical methods outlined in Table 6-1 of this Work Plan were selected based on their ability to provide reliable results which can be used to determine whether a given contaminant (or contaminant class) is present at concentrations:
  - Above reporting limits (RLs);
  - Above RLs and below its respective ARAR action level criteria, or
  - Above its respective ARAR action level criteria."
- **Section 6.3.1, page 6-20, 2nd paragraph**: "In several cases, laboratory method detection limits (MDLs) will be used to compare to ARARs. Concentrations that fall between the practical quantitation limits (PQL) and the MDL will be qualified accordingly. Exceptions to meeting ARARs are listed in Section 6.3.3 below."
- **Figure 6-1**: The figure indicates that the analytical result will be compared to the reporting limit and "criteria" or the ARAR.
- **Table C-1**: The table contains the target levels for soil and groundwater as derived from the NMWQCC groundwater standards, *NMED TPH Screening Guidelines* (October 2006), *NMED Technical Background Document for Development of Soil Screening Levels* (June 2006), EPA National Priority Drinking Water Standards MCLs, and the *Soil Screening Guidance for Radionuclides: Technical Background Document* (October 2000). However, the table does not include the soon-to-be-established facility background concentrations or the method detection limits (MDLs), where appropriate.

To effectively use the data generated from the 2008 Facility Background Study, the Permittee must revise the figure, relevant portions of Section 6.3.1, Table C-1, and other applicable sections and figures to include the comparison of sampling data results to the soon-to-be-established facility background concentrations and the reporting limits. The reporting limit may be used as the target level only if no other target level (e.g., SSL, MCL) exists. Refer also to Comments 5 and 10.

29. **Section 6.1.3.1.1, page 6-3; Section 6.1.5.1, page 6-8, 4th paragraph, all; Section 6.1.5.1, page 6-9, 3rd paragraph, all; Section 6.1.5.2, page 6-9, 3rd paragraph, 2nd sentence; Figure 6-1; and Table 6-1**

The Work Plan inconsistently describes the collection and analysis of soil and groundwater samples for pesticides and herbicides. The following excerpts demonstrate these inconsistencies:

- **Section 6.1.3.1.1:** This Section states that pesticides/herbicides are included in the soil analytical suite.
- **Section 6.1.5.1, page 6-8, 4th paragraph, all**: "Soil samples will be analyzed in an onsite laboratory for VOCs using gas chromatography / mass spectrometry (GC/MS-EPA 8260) and gas chromatography / flame ionization detection (GC/FID-ASTM D6520) and nitrate (NO3) using ion chromatography (IC) via EPA Method 300.0. Soil samples will be screened in the onsite laboratory for PAHs and TPH using field fluorometer analytical test kits as primary indicators of a potential sewer release. Soils will also be field-screened by the sampling team for the presence of radionuclides using a hand held alpha beta survey instrument (Ludlum 44-9). Additional sample volume will be collected for offsite analysis of additional analytes as described in Sections 6.2.2.1 and 6.2.2.2 of this Work Plan." This paragraph does not discuss pesticides/herbicide analyses for soil samples.
- **Section 6.1.5.1, page 6-9, 3rd paragraph, all:** "[Groundwater] Samples collected from the two pre-designated sample locations closest to, and downgradient from, Building 374 will also be analyzed offsite for pesticide/herbicides based on its relevant and unique operational history."
- **Section 6.1.5.2, page 6-9, 3rd paragraph, 2nd sentence:** "[During Stage 2,] Samples from the two closest pre-designated locations downgradient of Building 374 will also be analyzed offsite for pesticides/herbicides as described above."
- **Figure 6-1:** The figure indicates the collection of both soil and groundwater samples from Building 374 for the off-site analysis of pesticides/herbicides during Stage 2.
- **Table 6-1:** The table does not list pesticides/herbicides among the Stage 1 analytes, but they do appear in the Stage 2 analytical list.

The Permittee must revise all pertinent sections, figures, and tables of the Work Plan to indicate the collection of both soil and groundwater samples for off-site analyses for pesticides and herbicides at Building 374. The Permittee must revise the Work Plan to state at which stage, either Stage 1 or Stage 2, the soil and groundwater samples for pesticide and herbicide analyses will be collected. The Permittee must include, where appropriate, discussion of analytical method, QA and QC, and detection limits; likely, these discussions occur elsewhere in the document. The Permittee must discuss the "relevant and unique operational history" for Building 374 to justify the limitation of pesticide and herbicide analyses at this location. Refer also to Comment 10.

30. **Section 6.1.3.4, page 6-6, 2nd paragraph, 1st sentence; Section 6.1.5.1, pages 6-8 through 6-11; Section 6.2.2, pages 6-14 through 6-16; Section 6.3.3, pages 6-25 through 6-27; Figure 6-1, Table 6-1, and Table 6-2**

The sentence from Section 6.1.3.4 states, "[m]oisture content data will be derived from the soil analyses performed as part of the offsite analyses portion of the investigation [using USEPA Method 160.3M]." However, the collection of soil samples for moisture content data and the laboratory analysis are not described, listed, or mentioned in other relevant sections, figures or tables (e.g., Section 6.1.5.1, Section 6.2.2, Section 6.3.3, Figure 6-1, Table 6-1, and Table 6-2). The Permittee must revise all listed sections, figures, and tables to include the collection of soil moisture content data. Refer also to Comment 10.

31. **Section 6.1.3.1.3, page 6-4, 1st paragraph, 1st, 3rd, and 4th sentences; Section 6.1.5.1, page 6-8, last paragraph, last sentence; Section 6.1.5.1, page 6-9, 2nd paragraph, last sentence; Section 6.1.5.2, page 6-9, 2nd paragraph , last sentence; Section 6.1.5.2, page 6-9, 3rd paragraph, 3rd sentence; Section 6.1.5.3, page 6-10, 1st paragraph, 1st sentence; Section 6.3.2.1.5, page 6-24, all; Figure 6-1; and Table C-1 of Appendix C**

The Work Plan inconsistently and contradictorily describes the characterization of radionuclides. The absence of a means to evaluate the radionuclide field-screening data (e.g., no target or action levels for gross alpha or gross beta) greatly affects the ability of the Work Plan to demonstrate a cohesive radionuclide characterization process, as only gross alpha and gross beta data will be collected during Stage 1. For example, on one hand, the Work Plan indicates that any exceedance of a radionuclide target level will lead to additional sample collection and off-site laboratory analyses for specific radioisotopes during Stage 2. On the other hand, the Work Plan indicates that any exceedance of a radionuclide target level will lead to a site-specific risk evaluation. Yet, the Work Plan also indicates that the only samples to be collected and submitted for off-site laboratory analyses for specific radioisotopes are 10% of those with gross alpha/gross beta results below the unlisted target level. Meanwhile, the Work Plan declares that the field screening for gross alpha and gross beta is not a useful means of detecting levels of radioactive material that are at or below the unlisted gross alpha/gross beta target level. The following excerpts describe these contradictory elements:

- **Section 6.1.3.1.3, page 6-4, 1st paragraph, 1st, 3rd, and 4th sentences:** "Table A.1 (Decay Corrected) of USEPA's *Soil Screening Guidance for Radionuclides: Technical Background Document* (USEPA, October 2000), provides generic SSLs for 60 radionuclides in units of pico-curies per gram (pCi/g) and mg/kg, respectively. These generic SSLs are listed in Table C-1 in Appendix C of this Work Plan. If the SSLs presented in these tables are exceeded, a more site-specific evaluation will be performed to ensure that the site conditions and exposure pathways match those used to develop generic SSLs." (emphasis added)
- **Section 6.1.5.1, page 6-8, last paragraph, last sentence:** "Soils will also be field-screened by the sampling team for the presence of radionuclides using a hand held alpha beta survey instrument (Ludlum 44-9)." (emphasis added)
- **Section 6.1.5.1, page 6-9, 2nd paragraph, last sentence:** "The presence of radionuclides [in groundwater] will be determined in the field using a hand held alpha

beta survey instrument (Ludlum 44-9)." (emphasis added)

- **Section 6.1.5.2, page 6-9, 2nd paragraph, last sentence:** "Where results indicate contaminants in soils at concentration above the applicable SSLs or nitrate trigger level, the location will be documented as an identified release location and earmarked for delineation." (emphasis added)
- **Section 6.1.5.2, page 6-9, 3rd paragraph, 3rd sentence:** "Where results indicate contaminants in groundwater at concentrations above the applicable criteria or nitrate trigger level, 100 percent of the samples will be submitted for offsite analysis of SVOCs, RCRA 8 Metals, radionuclides, and pesticides/herbicides (Building 374-related locations only)." (emphasis added)
- **Section 6.1.5.3, page 6-10, 1st paragraph, 1st sentence:** "Contaminant delineation activities will be performed at locations where releases from the sewer have been identified and where concentrations are determined to exceed relevant criteria." (emphasis added)
- **Section 6.3.2.1.5, page 6-24, all:** "Soil and groundwater samples will be passively screened for alpha-beta emitting radionuclides using a hand-held Ludlum 449 scintillation meter. The field-based radioactive survey is not intended to detect levels of radioactive material at or below the ARARs [emphasis added]. The survey is intended to determine if gross levels of radioactivity are present in the subsurface. Definitive radiochemical analyses will be conducted on the soil and groundwater samples where screening indicates no radionuclide presence, at a minimum frequency of 10%." (emphasis added)
- **Figure 6-1:** The figure indicates that 100% of soil and groundwater samples with radionuclide field-screening results that exceed the radionuclide "criteria," reporting limit, and/or facility background values will be submitted for offsite laboratory analyses. Additionally, the figure shows that 10% of soil and groundwater samples with radionuclide field-screening results that fall below the radionuclide reporting limit values will be submitted for offsite laboratory analyses.
- **Table C-1:** This table lists the applicable or relevant and appropriate requirement-based action levels (ARARs) for four radionuclides, which include carbon-14, tritium, radium-226, and radium-228. The table does not include any target levels for gross alpha or gross beta.

The Permittee must specify in Section 6.1.3.1.3 and Table C-1 a target level, and the facility background levels for Stage 1 to allow for useful evaluation of the radionuclide field-screening data results. The Permittee must specify the detection limits and/or reporting limits for the radionuclide field-screening. The Permittee must modify the listed sections, tables, and figures, as well as other relevant portions of the Work Plan to provide a consistent and descriptive process for the collection, analysis, and evaluation of soil and groundwater samples for radionuclides. Refer also to Comments 5 and 10.

32. **Section 6.1.5.2, page 6-9, 2nd paragraph, last sentence and 3rd paragraph, last 3 sentences; Section 6.1.5.3, page 6-10, 1st paragraph, 1st and 2nd sentences**

The Work Plan does not clearly describe the process of characterizing a soil sample location when a measured concentration exceeds a specified target level. The reader must assume, using the descriptions in Section 6.1.5.2, 3rd paragraph (groundwater samples) and Section 6.1.5.3 that the soil samples will follow similar procedures. The following indicate the description differences:

- **Section 6.1.5.2, page 6-9, 2nd paragraph, last sentence**: "Where results indicate contaminants in soils at concentration above the applicable SSLs or nitrate trigger level, the location will be documented as an identified release location and earmarked for delineation."
- **Section 6.1.5.2, page 6-9, 3rd paragraph, last 3 sentences**: "Where results indicate contaminants in groundwater at concentrations above the applicable criteria or nitrate trigger level, 100 percent of the samples will be submitted for offsite analysis of SVOCs, RCRA 8 Metals, radionuclides, and pesticides/herbicides (Building 374-related locations only). The location will be documented as an identified release location and earmarked for delineation. The results from the Stage 2 sampling will be integrated into the data set generated during Stage 3 delineation."
- **Section 6.1.5.3, page 6-10, 1st paragraph, 1st and 2nd sentences**: "Contaminant delineation activities [Stage 3] will be performed at locations where releases from the sewer have been identified and where concentrations are determined to exceed relevant criteria. The delineations will focus on the specific contaminants of concern identified during State 1 and/or Stage 2."

The second excerpt provides discussion of the characterization process. At locations where contaminants exceed the target levels, 100 percent of the samples will be submitted to the off-site analytical laboratory for analyses. "Delineation" occurs during Stage 3. However, the first excerpt, which consists of a single sentence, provides the complete discussion on soil sample collection during Stage 1. Using the information from the second excerpt and the figures, the process used for groundwater samples likely occurs for soils. Neither paragraph describes whether any samples with contaminant concentrations below the target levels will be sent to the off-site laboratory for analyses.

The Permittee must explicitly and clearly describe the process of contamination characterization at both soil and groundwater sampling locations. The Permittee must provide a clearer connection between the "delineation" listed in Section 6.1.5.2 and Stage 3, as described in Section 6.1.5.3. The Permittee must specify whether "delineation" signifies Stage 3 and refer to the section that discusses the delineation strategies. Refer also to Comment 10.

33. **Section 6.1.5.4, page 6-11, 2nd paragraph, 2nd bullet point, 3rd paragraph, all, and 4th paragraph, 1st sentence; and Figure 6-4**

The section contains terminology without description or discussion. The following excerpts provide examples of undefined terminology:

- **Section 6.1.5.4, page 6-11, 2nd paragraph, 2nd bullet point:** "In close proximity to existing buildings or future buildings (see Primary Screening Question #2 for definition of close proximity)." (emphasis added)
- **Section 6.1.5.4, page 6-11, 3rd paragraph, all:** "To assist in the vapor intrusion evaluation beyond the primary screening steps shown in Figure 6-4 of this Work Plan, a qualified risk assessor will establish appropriate risk and attenuation factors associated with the generic, semi-site specific, and site specific (Johnson and Ettinger Vapor Intrusion Model) risk assessment stages." (emphasis added)
- **Section 6.1.5.4, page 6-11, 4th paragraph, 1st sentence:** "Soil-gas sampling and analyses may be performed, as deemed necessary, during the initial stages of the secondary screening process."
- **Figure 6-4:** The figure does not list Primary Screening Question #2. The figure merely states, "Perform Primary Screening" and indicates, "Perform Secondary Screening Activities, Q4 – Generic Screening [and] Q5 – Semi-Site Specific Screening." (emphasis added) Additionally, Figure 6-4 does not define Q4, Q5, or Q-6 or provide a reference for the origination of the question and where the questions are in the reference.

The Permittee must describe and define the underlined terms in Section 6.1.5.4 and Figure 6-4.

34. **Section 6.2, pages 6-13 through 6-20, all; and Section 7.3.3.1, page 7-6, 1st paragraph, 6th bullet point**

The Work Plan provides incomplete information regarding groundwater sample collection and monitoring well location documentation. Section 6.2 does not indicate whether the collected groundwater samples will be filtered or unfiltered, which indicator field parameters will be measured, or which SOPs will be used for any of these activities. Similarly, Section 7.3.3.1 does not specify how the location of the installed monitoring well will be recorded in its description of pertinent field and sampling information. For example, the 6th bullet of Section 7.3.3.1 states, "[l]ocation of sampling (e.g., monitoring well)" will be recorded. The Permittee must indicate how the monitoring well locations will be recorded (e.g., with global positioning coordinates). The Permittee must revise the sections to provide the missing information. Refer also to Comment 22.

35. **Section 6.2.8, page 6-19, 3rd paragraph, all**

The paragraph states, "[d]econtamination and purge waters will be locally contained in 5 gallon pails and conveyed to a 1,000 gallon portable storage tank. Waters contained in the portable tank will be subsequently transported to the HAFB wastewater treatment plant for proper disposal." The Permittee must ensure all liquid wastes (e.g., decontamination rinses, purged groundwater from development and sampling activities) are containerized and maintained until disposal through the HAFB Wastewater Treatment Plant (WWTP), pending laboratory analysis. If the laboratory results indicate analyte concentrations exist below target concentrations, the Permittee may dispose of liquid wastes via the HAFB WWTP. The Permittee must revise the section to reflect these conditions.

36. **Section 6.3.2.1, pages 6-21 through 6-24, all**

The section describes the on-site analytical program for the analysis of VOCs, PAHs, TPH, nitrate, and radionuclides. However, the section does not indicate how the on-site laboratory wastes that will be generated from sample preparation and labware cleaning will be handled. Likewise, the section does not describe the use of method blanks during sample analysis in the on-site laboratory. The Permittee must revise the section to include summary of activities associated with the collection, analysis, and disposal of on-site laboratory waste, as well as the use of method blanks. The Permittee must also provide SOP references for these activities. Refer also to Comments 3 and 10.

37. **Section 6.3.2.1, page 6-21, 1st sentence and Section 6.3.2.1.5, page 6-24, all**

The sentence states, "[t]he onsite analytical program will analyze for VOCs and nitrate, and screen for PAHs and TPH." The section does not address screening for radionuclides, which Section 6.3.2.1.5 describes. The Permittee must revise the section to include all radionuclides. Refer also to Comment 10.

38. **Section 6.3.2.1.1, page 6-22, 2nd full paragraph, last sentence; Section 6.3.3, page 6-26, 1st and 2nd bullet points, and Section 9 (References), page 9-3, 2nd reference**

The Work Plan refers to outdated and current versions of the Department of Defense (DOD) *Quality Systems Manual (QSM) for Environmental Laboratories*, which serves as the basis for QC and QA protocols. The most recent version of the *QSM* is Version 3, dated January 2006. The following excerpts exhibit the use of the outdated version and the updated version:

- **Section 6.3.2.1.1, page 6-22, 2nd full paragraph, last sentence**: "Appendix C of the HAFB Basewide QAPP provides quality control limits for the VOC analytical program that are based on the Department of Defense (DOD) *Quality Systems Manual (QSM) for Environmental Laboratories*, Version 1, dated October 2000."
- **Section 6.3.3, page 6-26, 1st and 2nd bullet points**:
  - "'Self Declaration' statement for the TAL-DEN [TestAmerica Laboratories, Denver, Colorado] and GEL [General Engineering Laboratories] facilities' compliance with DOD QSM v.3 (Note: the statement included in the HAFB Basewide QAPP Addendum is for Severn Trent Laboratories who recently purchased TAL-DEN and TAL-LA [TestAmerica Laboratories, Los Angeles, California]. Revised statements are not currently available)."
  - "Standard Operating Procedure for TAL-LA addressing compliance with DOD QSM v.3"
- **References**: United States Department of Defense, October, 2000. *Quality Systems Manual for Environmental Laboratories*, Version 1.

The Permittee must revise these sections and the reference to refer to the updated version. The Permittee must use an off-site analytical laboratory capable of meeting the requirements of *QSM*, Version 3. Refer also to Comment 3.

39. **Section 6.3.2.1.4, pages 6-23 through 6-24, all**

The section describes the analysis of soil and groundwater to determine nitrate concentrations using IC via USEPA Method 300. To aid in determining potential matrix interferences for other analytes (e.g, PAH by immunoassay), the Permittee must include chloride and sulfate analyses by ion chromatography via USEPA Method 300.0, (*Determination of Inorganic Anions by Ion Chromatography*, Revision 2.1, 1993) to the list of analytes and revise this section and the appropriate tables accordingly. Refer also to Comment 10.

40. **Section 6.3.2.1.5, page 6-24, all; Section 6.1.3.1.3, page 6-4, all; Section 6.1.3.2.2, page 6-5, all; and Table C-1 of Appendix C**

In its discussion of on-site radionuclide field screening, the Work Plan does not describe or refer to any quality control parameters. Furthermore, the Work Plan does not discuss detection limits, except to say in Section 6.3.2.1.5 that "[t]he field-based radioactive survey is not intended to detect levels of radioactive material at or below the ARARs." The Permittee must revise all pertinent sections of the Work Plan to include a discussion of QC parameters and detection limits for radionuclides. Refer also to Comment 10.

41. **Section 6.3.2.3, page 6-24, 1st paragraph, all and Tables 6-1 and 6-2**

The paragraph states, "[r]equirements for sample container types, holding times, and preservation chemicals are included in Table 6-1 of this Work Plan." Table 6-2 contains the listed information. The Permittee must revise the section to refer to Table 6-2 because Table 6-1 does not list this information.

42. **Section 6.3.3, page 6-26, last paragraph with two bullet points and Section 6.1.3, pages 6-3 through 6-7, all**

The Work Plan provides the target levels for four specific analytes in Section 6.3.3, which discusses Offsite Analytical Methods, rather than in the sections discussing the target levels or ARARs (Section 6.1.3). According to Section 6.3.3, the proposed laboratory cannot meet the listed target levels, as shown in the following excerpt:

- **Section 6.3.3, page 6-26, last paragraph, with two bullet points:** "As noted previously, for several compounds, MDLs will be used to meet the respective ARARs. Where concentrations fall between the PQLs and the MDLs, the data will be qualified accordingly. Exceptions to meeting the ARARs include: Benzo(a)pyrene and pentochlorophenol which have federal MCLs of 0.2 ug/L and 1.0 ug/L, respectively. TAL-DEN MDLs for these compounds are 0.74 ug/L and 20 ug/L, respectively and;"
- "Radium-226 and radium-226 [*sic*] which both have ARAR values of 0.016 pCi/g (see Table C-1 in Appendix C of this Work Plan). GEL's MDLs for these isotopes are 1.0 pCi/g and 3.0 pCi/g, respectively. According to GEL, these isotopes are typically present in background soils at values well above the 0.016 pCi/g values, therefore, the ARAR values for these isotopes may prove to be non-applicable to the DQOs [data quality objectives] for this project."

The Permittee must obtain new, lower reporting limits from the laboratory or contract with a laboratory that can provide lower reporting limits. The Permittee must revise the first sentence of the second bullet to remove the repetitive radium-226 and replace it with radium-228. The Permittee must add the new reporting limits to Appendix A. Refer also to Comment 10.

43. **Table 3-1**

The table contains numerous problems:

- Undefined abbreviations (e.g., LS, PS, OWS, ?, ft)
- Cells with and without shading
- Six columns containing no data, except the column title. Columns include "Actual Upgradient Manhole ID," "Actual Downgradient Manhole ID," "Initial Siting Latitude," "Initial Siting Longitude," "Actual Latitude," and "Actual Longitude"
- Undefined empty cells, such as those scattered throughout the "Segment Sequence #" column
- Truncated entries in the "Sampling Location Rationale" column
- The word "Totals" at the end of the table does not appear to be associated with anything
- The only listed definition states, "Bold boxes indicate unique lattice segments or long lengths without manholes." The term "lattice segment" does not appear anywhere else in the Work Plan.
- Absence of page numbers
- Bold boxes encircling only four columns, seeming to exclude the other data in the row

The Permittee must modify the table as follows:

- Include definitions for all abbreviations and shading;
- Remove the columns with empty cells;
- Define the empty cells in the "Segment Sequence #" column and/or fill the cell with a phrase, (e.g., "no data");
- Resize the cells such that none of the information appears truncated;
- Make an appropriate use of the word "Totals" at the end of the table via definition, providing a total number of unspecific totals, or delete it;
- Define the terminology "lattice segment" and use it where appropriate in the Work Plan, or remove it and use terminology consistent with the Work Plan;
- Number the pages; and
- Extend the bold boxes across all columns or define the reason they encircle only four columns.

Refer also to Comment 6.

44. **Tables 3-2, 3-3, and 8-2**

The tables contain undefined empty cells. Table 3-2 does not indicate the meaning of the dash (-). The Permittee must revise the tables to include definitions, and include a definition or explanation for the empty cells. Refer also to Comments 42 and 44.

45. **Table 5-1**

The Permittee must update the table to include all criteria as described in Comment 5. Table 5-1 contains a number of discrepancies, which include:

- Table 5-1 lists the question, "Is measurable non-aqueous phase liquid (NAPL) present?" However, NAPL does not appear anywhere else in the Work Plan. The Permittee must include discussion of NAPLs within the conceptual model of the Work Plan, as well as the groundwater sampling portion (as appropriate).
- According to Table 5-1, "TDS samples [will be collected] wherever groundwater is sampled," yet, the remainder of the Work Plan does not reflect this strategy. The Permittee must modify all appropriate sections to include TDS analyses for groundwater in all Stages. Refer also to Comment 10.
- The Permittee must modify the table to include references to documents.
- The Permittee must revise Table 5-1 to eliminate the duplicate numbering in the "Release Information" part of the table.
- The Work Plan text does not discuss OT32 Primate Research Institute as a "Confirmed Release Location;" consequently, its appearance within Table 5-1 as the sole "Confirmed Release Location" is unexpected. The Permittee must provide an explanation for this designation.
- Table 5-1 instructs to "analyze for indicator Pollutants of Concern (POCs) in near real-time in every sample and extended list in 10% of samples." However, the Work Plan indicates that when concentrations are measured above target levels, 100% of soil and groundwater samples will proceed for off-site laboratory analyses. Moreover, when concentrations are measured below target levels, 10% of soil and groundwater samples will proceed for off-site laboratory analyses.

The Permittee must revise Table 5-1 to correct these discrepancies.

46. **Tables 6-1, 6-2, 6-3, and 7-1**

These tables contain lists of analytes. The Permittee must revise these tables to reflect the updated analyte list (e.g, TAL metals) and define all acronyms. Refer to Comments 10, 23, 29, 30, and 41.

47. **Appendix C, Table C-1**

Many footnotes on pages 13 through 15 are irrelevant and extraneous to Table C-1 because they are not used within the table. The NMED requires use of the USEPA Region 6 criteria, as New Mexico is in USEPA Region 6. To maintain consistency with other HAFB documents, the NMED requests that the work plan include USEPA Region 6 criteria, rather

than USEPA Region 9 and Region 4 criteria. Refer also to Comments 10, 28, 31, 40, and 41.

The Permittee must submit the required information within 60 days of receipt of this letter. The response must be in the form of a revised Corrective Measures Work Plan that incorporates all the responses to the above NOD in two hard copies indicating added information in highlights, and deleted information in strikeouts, and on two CDs compatible with Microsoft Word. Further, in order to expedite review of the responses, provide a matrix of the comments and HAFB responses.

If you have any questions regarding this NOD or if you would like to discuss the comments prior to your response, please contact Dezbah Tso of my staff at (505) 222-9528, or at the above letterhead address.

Sincerely,

James P. Bearzi
Chief
Hazardous Waste Bureau

JPB:dat
Table Attachment

cc: J. Kieling, NMED HWB
W. Moats, NMED HWB
C. Amindyas, NMED HWB
D. Strasser, NMED HWB
D. Tso, NMED HWB
L. King, EPA, Region 6 (6PD-F)
File: HAFB 2009 and Reading
HWB-HAFB-08-003

TABLE
Summary of Chemicals, Pollutants of Concern,

Analytes	Chemicals/ pollutants [2]			Proposed Analytes by Stage and Medium, as described in Section 6.1.5, Table 6-1, and Figure 6-1, as shown									
				Stage 1 [3]						Stage 2 [3]			
				Soil			Groundwater			Soil			Groundwate
	Section 1.9 POCs	Table 3-2 Chemical releases	Section 5.2 POCs	Section	Table	Figure	Section	Table	Figure	Section	Table	Figure	Section
Antifreeze	–	X	–	–	–	–	–	–	–	–	–	–	–
Surfactants	–	X	–	–	–	–	–	–	–	–	–	–	–
Phenol	–	X	–	–	–	–	–	–	–	–	–	–	–
Process / Developer Chemicals	–	X	–	–	–	–	–	–	–	–	–	–	–
POLs	X	X	X	–	–	–	–	–	–	–	–	–	–
Oil & Grease	X	X	X	–	–	–	–	–	–	–	–	–	–
VOCs	X	X	X	X	X	X	X	X	X	–	–	X	–
SVOCs	X	X	X	–	–	–	–	–	–	X	X	X	X
PAHs	–	–	–	X	X	X	X	X	X	–	–	X	–
TPH	–	–	–	X	X	X	–	–	–	–	–	X	–
Metals	XH	XH	X	–	–	–	–	–	–	XR	XR	XR	XR
Herbicides	X	X	X	–	–	–	–	–	–	X	X	X	X
Pesticides	X	X	X	–	–	–	–	–	–	X	X	X	X
Radionuclides	X	X	X	XG	XG	XG	X	XG	XG	–	–	–	–
Carbon-14	X	X	–	–	–	–	–	–	–	X	X	X	X
Tritium	X	X	–	–	–	–	–	–	–	X	X	X	X
Radium-226	X	X	–	–	–	–	–	–	–	X	X	X	X
Radium-228	X	X	–	–	–	–	–	–	–	X	X	X	X
Iodine-125	X	X	–	–	–	–	–	–	–	–	–	–	–
Nitrate	–	–	X	X	X	X	X	X	X	–	–	X	–
Phosphates	X	X	X	–	–	–	–	–	–	–	–	–	–
Sulfates	–	X	–	–	–	–	–	–	–	–	–	–	–
Sulfides	X	–	X	–	–	–	–	–	–	–	–	–	–
Chlorides	X	X	X	–	–	–	–	–	–	–	–	–	–
Total Dissolved Solids	–	–	–	–	–	–	X	–	–	–	–	–	–
Total Suspended solids	X	X	X	–	–	–	–	–	–	–	–	–	–
Biological Oxygen Demand	X	X	X	–	–	–	–	–	–	–	–	–	–
Chemical Oxygen Demand	X	X	X	–	–	–	–	–	–	–	–	–	–
Moisture Content	–	–	–	–	–	–	–	–	–	–	–	–	–

FOOTNOTES

[1] See the list of references below for page numbers and descriptions.

[2] These sections and table describe historical information, listing general chemical groups and/or pollutants of concern (POCs) that have been or may have been

[3] According to the descriptions in the document, soil vapor and indoor air sampling and analysis will only occur in Stage 4, and only soil and groundwater samplin

[4] Section 6.1.3.4 lists moisture content as the only parameter requiring sample collection and analysis during this investigation; the data for other parameters (e.g

ıCHMENT
ıalytes Discussed in the SWMU 183 Work Plan [1]

	Stage 3 [3]						Stage 4 [3]						Target Levels by Medium	
	Soil			Groundwater			Soil Vapor			Indoor Air			Section 6.1.3	
Figure	Section	Table	Figure	Section	Table	Figure	Section	Table	Figure	Section	Table	Figure	Soil	Ground water
–	–	–	–	–	–	–	–	–	–	–	–	–	–	–
–	–	–	–	–	–	–	–	–	–	–	–	–	–	–
–	–	–	–	–	–	–	–	–	–	–	–	–	–	–
–	–	–	–	–	–	–	–	–	–	–	–	–	–	–
–	–	–	–	–	–	–	–	–	–	–	–	–	–	–
–	–	–	–	–	–	–	–	–	–	–	–	–	–	–
X	X	X	X	X	X	X	X	X	X	X	X	X	X	X
X		X	X	X	X	X	–	–	–	–	–	–	–	–
X		X	X	X	X	X	–	–	–	–	–	–	X	X
–	X	–	X	–	–	–	–	–	–	–	–	–	–	–
XR	XR	XR	XR	XR	XR	XR	–	–	–	–	–	–	XR	XR
X	–	X	X	X	X	X	–	–	–	–	–	–	X	X
X	–	X	X	X	X	X	–	–	–	–	–	–	X	X
–	X	–	–	–	–	–	–	–	–	–	–	–	X	X
X	–	X	X	X	X	X	–	–	–	–	–	–	–	–
X	–	X	X	X	X	X	–	–	–	–	–	–	–	–
X	–	X	X	X	X	X	–	–	–	–	–	–	–	–
X	–	X	X	X	X	X	–	–	–	–	–	–	–	–
–	–	–	–	–	–	–	–	–	–	–	–	–	–	–
X	X	–	X	X	–	X	–	–	–	–	–	–	X	–
–	–	–	–	–	–	–	–	–	–	–	–	–	–	–
–	–	–	–	–	–	–	–	–	–	–	–	–	–	–
–	–	–	–	–	–	–	–	–	–	–	–	–	–	–
–	–	–	–	–	–	–	–	–	–	–	–	–	–	–
–	–	–	–	X	–	–	–	–	–	–	–	–	–	–
–	–	–	–	–	–	–	–	–	–	–	–	–	–	–
–	–	–	–	–	–	–	–	–	–	–	–	–	–	–
–	–	–	–	–	–	–	–	–	–	–	–	–	–	–
–	–	–	–	–	–	–	–	–	–	–	–	–	X [4]	–

ɜd.
ɜnalysis will occur in Stages 1 through 3. The Stage 3 results will determine whether Stage 4 sampling and analysis is required.
ulk density, specific gravity, fractional organic carbon content) will consist of results from other investigations. See references below for additional description.

TABLE ATTA

ABBREVIATIONS

–	= Indicates the section, table, or figure does not discuss or list the chemical, POC, or analyte.
ARAR	= Applicable or Relevant and Appropriate Requirements.
ASTM	= American Society for Testing and Materials.
HAFB	= Holloman Air Force Base.
Heavy	= A generic term for a category of metals.
PAH	= Polycyclic aromatic hydrocarbons.
POC	= Pollutant of concern.
POL	= Petroleum, oil, and lubricants.
RCRA	= Resource Conservation and Recovery Act.
RCRA 8	= RCRA 8 metals list includes arsenic, barium, cadmium, chromium, lead, mercury, selenium and silver.
RFI	= RCRA Facility Investigation.
Stage 1	= Sewer Release Identification. Discussed in Section 6.1.5.1, pages 6-8 through 6-9.
Stage 2	= Expanded analyte List Analysis. Discussed in Section 6.1.5.2, page 6-9.
Stage 3	= Identified Release Areas Delineation. Discussed in Section 6.1.5.3, page 6-10.
Stage 4	= Vapor Intrusion Evaluation. Discussed in Section 6.1.5.4, page 6-11.
SVOC	= Semi-volatile organic compound.
TAL	= Target analyte list. List of metals includes aluminum, antimony, arsenic, barium, beryllium, cadmium, calcium, chromium, cobalt, iron, lead, m
TPH	= Total petroleum hydrocarbons.
USEPA	= U.S. Environmental Protection Agency.
X	= Section, table, or figure specifies the general chemical group, pollutant of concern, and/or analyte.
XG	= Proposed analyte is gross alpha/gross beta during field screening using a hand-held instrument.
XH	= Description indicates "heavy metals."
XR	= Description indicates "RCRA 8 metals."

REFERENCES

Section 1.9	= Industrial Activities and Waste Generation: lists pollutants of concern (POCs). Section 1.9, page 1-8, 1st paragraph, entire bullet list.
Section 5.2	= Initial Conceptual Site Model Summary Description: lists classes of POCs discharged to the sewer system. Section 5.2, page 5-2, 1st bullet li
Section 6.1.3	= Dynamic Use of Applicable or Relevant and Appropriate Requirements (ARARs). These are also referred to as action levels or target levels.
Section 6.1.3.1	= Dynamic Use of ARARs for Soils: lists only certain analytes with the reference containing the target or action level. Section 6.1.3.1, pages 6-
Section 6.1.3.2	= Dynamic Use of ARARs for Groundwater: lists only certain analytes with the reference containing the target or action level. Section 6.1.3.2,
Section 6.1.3.4	= Dynamic Use of ARARs for Geotechnical Parameters: lists various soil parameters and describes data compilation. None of these paramete
Section 6.1.5	= Stage-Specific Activities: specifies activities of each RFI stage.
Section 6.1.5.1	= Stage 1 - Sewer Release Identification: lists analytes, some methods, describes field-screening for both soil and groundwater samples. Sec
Section 6.1.5.2	= Stage 2 - Expanded Analyte List Analysis: lists analytes, some methods, describes field-screening for both soil and groundwater samples. S
Section 6.1.5.3	= Stage 3 - Identified Release Area Delineation: discusses sampling in transects perpendicular to the sewer line to delineate the release area.
Section 6.1.5.4	= Stage 4 - Vapor Intrusion Evaluation: refers to guidance document and refers to Table 6-1 for analytes. Section 6.1.5.4, page 6-11, all.
Figure 6-1	= Triad RFI Dynamic Decision Logic: illustrates the decision-making processes, including critical decision points and proposed analytes.
Table 3-2	=Pollutants of Concern Known to Have Been Discharged to Sewer System: lists the chemicals known to have been discharged to the sewer s
Table 6-1	= Onsite and Offsite Analytical Plan: lists analytes, laboratory and field-screening methods, and data type for each characterization stage.

NT, CONTINUED

m, manganese, mercury, nickel, potassium, selenium, silver, sodium, thallium, vanadium and zinc.

tion does not describe the soon-to-be-established Facility background levels.
gh 6-5, including all subsections.
5, all.
action or target levels. Section 6.1.3.4, page 6-6, 1st paragraph, bulleted list.

5.1, pages 6-8 through 6-9, all.
.1.5.2, page 6-9, all.
6.1.5.3, page 6-10, all.

based on a previous industrial pretreatment study by Ecology and Environment in 1998.

Response to Comments Final Triad Approach Dynamic Work Plan RCRA Facility Investigation SWMU 183 Basewide Sewer System Holloman Air Force Base, New Mexico, February, 2008				
Comment No.	**Section**	**Page**	**Comment**	**Response**
Author: Dezbah Tso			**Date of Comments: May 14, 2009**	**Date of Response: July 1, 2009**
1	General		Figures/maps provided in work plans must list the coordinate system, projection, and each datum (e.g., Transverse Mercator Projection, New Mexico State Plane Coordinate System, Central Zone, 1983 North American Horizontal Datum, 1983 North American Vertical Datum). The Permittee must revise all figures to satisfy these requirements.	Concur. All of the Figures/Plates provided in this Work Plan have been revised to include the New Mexico State Plane Coordinate System, projection, and datum.
2	General		All tables provided in work plans and reports must explain all abbreviations, quality flags, and special formatting (e.g., LS, special colors used, **bold** type used to communicate specific information, J = ?, B = ?) in the footnotes. The test methods must be listed and legible, spelling errors corrected, and sample dates provided on the tables. The Permittee must revise all tables to satisfy these requirements. Refer to Comments 6, 10, 13, 23, 28, 29, 30, 31, 40, 41, 42, 44, 45, 46, and 47 for specifics.	Concur. All of the Tables included in the SWMU 183 Work Plan have been revised to explain all abbreviations, quality flags, and special formatting in the footnotes. Tables have also been revised with the appropriate USEPA SW-846 test methods listed. Additionally, all spelling errors have been corrected, and sample dates will be included on the applicable RFI Report tables.
3	General		The Work Plan, in places, contains complete citations and references to other pertinent documents, such as other Holloman Air Force Base (HAFB) documents (e.g, *Final Basewide Quality Assurance Project Plan* (QAPP), *Holloman Air Force Base, New Mexico*, November 2003), Standard Operating Procedures (SOPs), company-specific SOPs (e.g., Bhate and Stone), and methods. Many other citations are incomplete. The text must include complete citations and references (e.g., author, publisher, publication date [month, year], method number). All references, including those listed in figures and tables must be included in the References section. With regard to HAFB SOPs and company-specific procedures, the first SOP/procedure listing must include the complete title, rather than just the number. All citations and references must exactly match the listing in the HAFB QAPP. Copies of some company-specific procedures do not accompany the Work Plan; the Permittee must provide copies of all company SOPs. All methods listed in the work plan, including the tables and figures, must have complete references. For example, citation of methods from the American Society for Testing and Materials (ASTM) must include the publication year, and methods from the U.S. Environmental Protection Agency (USEPA) must specify source (e.g., SW846) and indicate the version or revision number of the method. Refer also to Comments 12, 13, 14, 15, 16, 18, 19, 20, 24, 36, and 38 for specific examples.	Concur. All citations within the Work Plan text, figures, and tables have been revised to be complete and all references have been included in Section 11 (References). All references to HAFB Standard Operating Procedures (SOPs) have been revised to include the complete title for first use, and match the list of SOPs presented in the HAFB QAPP. All references to company-specific procedures will be revised to include the complete title, rather than just the SOP number. Copies of all company-specific SOPs will be provided in Appendix C of this Work Plan. All of the analytical test methods provided in this Work Plan, (including tables) have been revised to include complete test method reference.
4	General		Spelling errors (e.g., augur, benzo[a]pyrne) must be corrected in the Work Plan text, figures, and all appendices.	Concur. Spelling errors have been corrected in the Work Plan text, Figures, Tables, and Appendices.

Response to Comments Final Triad Approach Dynamic Work Plan RCRA Facility Investigation SWMU 183 Basewide Sewer System Holloman Air Force Base, New Mexico, February, 2008				
Comment No.	**Section**	**Page**	**Comment**	**Response**
5	General		The Permittee must include comparison with the soon-to-be established facility background levels, in addition to the following criteria for both groundwater and soil: appropriate values as specified by the New Mexico Water Quality Control Commission (NMWQCC), the USEPA Region 6 Maximum Contaminant Levels (MCLs), the *New Mexico Environment Department TPH Screening Guidelines* (October 2006), the *New Mexico Environment Department Technical Background Document for Development of Soil Screening Levels* (SSLs) (Revision 4.0, June 2006), the USEPA Region 6 Screening Action Levels (SALs), and the USEPA *Soil Screening Guidance for Radionuclides: Technical Background Document* (October 2000). Because the facility background study report may not be completed before the response to this NOD is due, the Permittee must, at a minimum, include reference to the soon-to-be established facility background levels within the appropriate sections, figures, and tables of this Work Plan. The Permittee must actively use the established facility background levels in the investigation report. Refer also to Comments 10, 23, 28, and 31.	Concur. Section 6.2.1, Use of Applicable or Relevant and Appropriate Requirements, has been revised. As per the HAFB Hazardous Waste Facility Permit number NM6572124422, Appendix 4-F, Section V.1 (Soil Cleanup Levels), the residential Soil Screening Levels (SSLs) established in NMED's Technical Background Document for Development of Soil Screening Levels, Revision 5.0 (NMED, 2009) will be used as the action levels for detections of VOCs, SVOCs, PCBs, pesticides (Sub-basin 4 only), herbicides (Sub-basin 4 only), and TAL metals that are detected in soil samples. For constituents with no established NMED residential SSL, the USEPA Region 6 Human Health Medium Specific Screening Levels (HHMSSLs) will be used as the action level. It should be noted that under a recent Interagency Agreement, the USEPA Region 3 Risk Based Concentration (RBC) Table, Region 6 HHMSSL Table, and the Region 9 Preliminary Remediation Goal (PRG) Table have been combined into the Regional Screening Level (RSL) Table (USEPA, 2009a). The action levels for TPH are established in the NMED TPH Screening Guidelines (NMED, 2006b). The TPH screening guideline (residential direct exposure), for unknown oil (800 mg/kg) (Table 2b, NMED, 2006b) will be used as the action level for total TPH concentrations (combined GRO, DRO, and ORO). Detected radionuclides (Carbon-14, Tritium, Radium-226 and Radium 228 [Sub-basins 8 and 9 only]) will be evaluated with the USEPA *Soil Screening Guidance for Radionuclides: Technical Background Document* (October 2000). Currently, the NMED has not established a soil clean up level or SSL for perchlorate (Sub-basin 8 only); therefore the USEPA Region 6 RSL of 55 mg/kg (USEPA, 2009a) will be utilized as the action level for perchlorate detections in soil. Additionally, all inorganic constituents (e.g., metals) detected in the soil samples will be compared to the HAFB Background, Composite Soil, Upper Tolerance Limits (UTLs) (pending NMED approval of the *Basewide Background Study Report, Holloman Air Force Base, New Mexico* [NationView/Bhate JV III, 2009]). There are two applicable standards for groundwater per the HAFB Hazardous Waste Facility Permit number NM6572124422, Appendix 4-F, Section III.1 (Groundwater Cleanup Levels): the NMWQCC groundwater standards for contaminants (NMAC 20.6.2) and the *USEPA National Priority Drinking Water Regulations Maximum Contaminant Levels (MCLs)* (USEPA, 2009b). The lower of the two standards will be used as action levels for VOCs, SVOCs, PCBs, Pesticides (Sub-basin 4 only), Herbicides (Sub-basin 4 only) and TAL Metals in groundwater. The NMED

Response to Comments Final Triad Approach Dynamic Work Plan RCRA Facility Investigation SWMU 183 Basewide Sewer System Holloman Air Force Base, New Mexico, February, 2008				
Comment No.	**Section**	**Page**	**Comment**	**Response**
				TPH screening guideline for unknown oil (50.0 mg/L) will be used as the action level for total TPH concentrations (GRO, DRO, and ORO) detected in groundwater (Table 2b, NMED, 2006b). Detected radionuclides (Carbon-14, Tritium, Radium-226, and Radium 228 [Sub-basins 8 and 9 only]) will be evaluated with Table 2.3 of USEPA's *Soil Screening Guidance for Radionuclides: Technical Background Document* (USEPA, 2000), which provides the Federal MCLs for 60 radionuclides in groundwater. The MCLs in Table 2.3 were obtained from Drinking Water Regulations and Health Advisories (USEPA, 1995). Per the HAFB Hazardous Waste Facility Permit, Section III.1.2, the NMED at this time, has adopted the USEPA drinking water reference dose as an interim groundwater clean up level. In December 2008, the USEPA issued an Interim Drinking Water Health Advisory for exposure to perchlorate of 15 µg/L in water (USEPA, 2008), which will serve as the action level for perchlorate detections in groundwater. Additionally, all inorganic constituents (e.g., TAL metals) detected in the groundwater samples will be compared to the HAFB Background, Dissolved Metals, Groundwater UTLs (pending NMED approval of the *Basewide Background Study Report, Holloman Air Force Base, New Mexico* [NationView|Bhate JV III, 2009]).
6	Plates 1 and 2; Table 3-1; and Section 6.1.6	6-11 through 6-13	**Plates 1 and 2; Table 3-1; and Section 6.1.6, pages 6-11 through 6-13, all** Plate 1, Plate 2, and Table 3-1 specify 252 sample collection locations for Stage 1, Sewer Release Identification. Section 6.1.6 provides the strategy employed to select the locations. The Permittee must revise the number of locations to reduce the number based upon the following location criteria: • From sewer pipe junctions • Down gradient from suspected or known release areas • Down gradient from SWMUs with suspected or known releases • From places where two pipes of different diameters or materials join The Permittee may form combinations of criteria to limit the number of sample collection locations. The Permittee must design the sample collection plan to emphasize areas of suspected or known releases. Refer also to Comment 42.	Concur. The new sample location criteria have been incorporated into Sections 3.4 (Sewer System RFI Sampling Strategy) and 6.2.2 (Field Sampling Location Plan Design Basis). Based on the new sampling location criteria, Plates 1 and 2 have been revised and the sampling locations have been relocated and reduced to 52 locations. The text in Section 6 has been revised to reflect the new sampling strategy.

Response to Comments Final Triad Approach Dynamic Work Plan RCRA Facility Investigation SWMU 183 Basewide Sewer System Holloman Air Force Base, New Mexico, February, 2008				
Comment No.	**Section**	**Page**	**Comment**	**Response**
7	Plates 1 and 2		**Plates 1 and 2** Plates 1 and 2 provide incomplete and confusing information. The Permittee must revise both plates to: • Remove from the Plates those SWMUs and AOCs that do not currently require corrective action, as listed in Table B of the facility's Operating Permit • Clearly define the grey numbers; blue numbers; pink numbers; black numbers; and the bold-faced, black numbers; and all abbreviations Plate 2 shows SWMU 75. However, neither Table A nor Table B of the facility's Operating Permit lists SWMU 75 because SWMU 75 is the same as the permitted Container Storage Unit and should not be referred to as a SWMU. Thus, SWMU 75 does not exist. If the Permittee intended SWMU 75 to signify another SWMU, the Permittee must correct this typographical error, provide the correct unit number, and correct the information on Plate 2. If the Permittee intended to refer to the permitted Container Storage Unit, then remove the SWMU 75 label from the plates. Refer also to Comment 13.	Concur. Plates 1 and 2 have been revised as follows: 1.) Plates 1 and 2 have been revised to only show the SWMUs and AOCs that are currently listed in Table A of the HAFB Hazardous Waste Facility Permit (No. NM6572124422). All SWMUs and AOCs listed in Table B of the HAFB Hazardous Waste Facility Permit (sites not currently requiring corrective action) have been removed from Plates 1 and 2. 2.) The grey, blue, pink, black numbers (including the bold-faced black numbers), and all abbreviations have been clearly defined in the legends. 3.) The SWMU 75 label identifies the permitted Container Storage Unit, and has been removed from Plate 2.
8	1.7, 3.1, and 5.2	1-7, 3-1, and 5-1	**Section 1.7, page 1-7, 2nd paragraph, 1st sentence, Section 3.1, page 3-1, 1st paragraph, 2nd sentence, and Section 5.2, page 5-1, 1st paragraph, 1st bullet point** The Work Plan provides inconsistent information regarding the length of the sewer system, as shown in the following excerpts: • **Section 1.7, page 1-7, 2nd paragraph, 1st sentence:** "The SWMU 183 site (see Figure 1-2 and Plates 1 and 2) is unique in that, rather than being a waste management system of limited to moderate size in a singular physical location, it is a subsurface feature comprised of approximately 22 miles of sewer line that serves the entire developed portions of the Base." • **Section 3.1, page 3-1, 1st paragraph, 2nd sentence:** "The systems consists of over 165,000 feet [or 31.25 miles] of sewer lines, that on average, are located approximately 6 feet bgs." • **Section 5.2, page 5-1, 1st paragraph, 1st bullet point:** "Approximately 22 miles of sewer line constructed of various materials" The Permittee must revise the text to list the correct and consistent sewer system length.	Concur. The referenced sections have been revised to contain correct and consistent information regarding the length of the sewer system (approximately 165,000 feet). Note: The length of the HAFB basewide sewer system (approximately 165,000 feet) was obtained from Table 2-2 presented in the *Infiltration and Inflow Study Report*, Radian International, LLC, August 1998. Table 2-2 is now included in Appendix B-1 (Historical Data Summaries) of this Work Plan.

Response to Comments Final Triad Approach Dynamic Work Plan RCRA Facility Investigation SWMU 183 Basewide Sewer System Holloman Air Force Base, New Mexico, February, 2008				
Comment No.	**Section**	**Page**	**Comment**	**Response**
9	1.7 and 5.2	1-7 and 5-1	**Section 1.7, page 1-7, 2nd paragraph, 2nd sentence and Section 5.2, page 5-1, 1st paragraph, 2nd and 3rd bullet points** The sentences and phrases are inconsistent with respect to the number of active manholes and pumping stations, as shown in the following: • **Section 1.7, page 1-7, 2nd paragraph, 2nd sentence:** "In addition to the sewer lines, the system includes over 800 active and approximately 100 abandoned manholes, approximately 10 lift (pumping) stations, and hundreds of variably contributing sources distributed throughout the entire Base, including direct discharges from industrial/operational facilities and domestic structures, as well as pass-through discharges from additional waste management systems such as oil/water separators." • **Section 5.2, page 5-1, 1st paragraph, 2nd bullet point:** "Over 500 active and approximately 100 abandoned manholes" • **Section 5.2, page 5-1, 1st paragraph, 2nd bullet point:** "Approximately 20 lift (pumping) stations and force mains" The Permittee must revise the text to list the correct and consistent number of active manholes and lift (pumping) stations.	Concur. The referenced sections have been revised to contain correct and consistent information regarding the number of active manholes and lift (pumping) stations as follows: • 715 active and 131 inactive (abandoned/removed) manholes • 24 lift (pumping) stations • 19 active and 22 inactive oil/water separators
10	1.9, 3.4, 5.2, 6.1.3.1, 6.1.3.2, 6.1.3.4, 6.1.5.1, 6.1.5.2, 6.1.5.3, 6.1.5.4, Figure 6-1, Table 3-2, Table 6-1	1-8, 3-2, 5-2, 6-3 through 6-6, 6-8 through 6-11, Figure 6-1, Table 3-2, Table 6-1	**Section 1.9, page 1-8, 1st paragraph, entire bullet list; Section 5.2, page 5-2, 1st bullet list; Section 6.1.3.1, pages 6-3 through 6-5, including all subsections; Section 6.1.3.2, page 6-5, all; Section 6.1.3.4, page 6-6, 1st paragraph, bulleted list; Section 6.1.5.1, pages 6-8 through 6-9, all; Section 6.1.5.2, page 6-9, all; Section 6.1.5.3, page 6-10, all; Section 6.1.5.4, page 6-11, all; Figure 6-1; Table 3-2; Table 6-1; and Section 3.4, page 3-2, 1st paragraph, 1st sentence** The listed sections, figure, and tables contain information regarding chemicals, pollutants of concern (POCs), proposed analytes, and target or Applicable or Relevant and Appropriate Requirement (ARAR) action level criteria. The Table Attachment to this Notice of Disapproval (NOD) summarizes the information. As shown in the Table Attachment, the Work Plan inconsistently lists and describes the chemicals, POCs, analytes, and target levels. For example, sulfate appears in one section that describes released chemicals or POCs; sulfate does not appear on any proposed analyte list. In another case, the Work Plan lists moisture content as a proposed soil analyte; however, this appearance occurs in the section describing target levels and does not appear in any other part of the Work Plan. The Table Attachment summarizes the approach to decision-making processes related to the proposed analytes, as proposed by the Permittee. The Table Attachment demonstrates the fact that the decision-making processes are not well documented. The Work Plan mentions that released chemicals or POCs are tabulated in a section or table. Some chemicals or	Concur. The referenced sections and specifically Section 6 (Sampling and Analysis Plan for Characterization of Releases of Hazardous Waste) have been completely revised to include a clear, logical, and consistent discussion of historically released chemicals, (including contaminants of potential concern [COPCs]), proposed analytes, and ARAR criteria (refer to response to Comment 5) including the established HAFB background concentrations for inorganic constituents (pending NMED approval of the *Basewide Background Study Report, Holloman Air Force Base, New Mexico* [NationView|Bhate JV III, 2009]). The Triad dynamic decision making process (onsite screening and analysis [Figures 6-1 and 6-2 Dynamic Decision Logic Diagrams], involving immunoassay testing and onsite laboratory analysis) presented in the *Final Triad Approach Dynamic Work Plan SWMU 183-Basewide Sewer System, HAFB, NM* (Stone Environmental, Feb 2008) has been deleted and replaced with a more standard USEPA RFI sampling approach which includes a more comprehensive sampling matrix. TAL metals, sulfate, chloride, PCBs, and SVOCs, have been added to the offsite laboratory analytical sampling matrix for all soil and groundwater samples collected during the HAFB Basewide Sewer System (SWMU 183) RFI. All soil and groundwater samples will be shipped offsite and analyzed by a National Environmental Laboratory Accreditation Program (NELAP) laboratory. Additionally all samples will be analyzed for VOCs and TPH. Based on additional COPCs, soil and groundwater samples in certain sub-basins will also be analyzed for radionuclides, perchlorate, pesticides, and herbicides. The sub-basin specific sampling details are presented in Sections 6.3.2 and 6.3.3 of

Response to Comments Final Triad Approach Dynamic Work Plan RCRA Facility Investigation SWMU 183 Basewide Sewer System Holloman Air Force Base, New Mexico, February, 2008				
Comment No.	**Section**	**Page**	**Comment**	**Response**
			POCs, such as antifreeze or sulfides are briefly introduced, but the Work Plan does not discuss them any further. Rather, the Work Plan merely provides the generic, blanket proviso in Section 3.4, which states the following: "Based on the above information [the diversity of compounds, variability in their chemical formulation, and complex and extensive intermixing environment of the sewer], and the logistical and cost impracticability of sampling and analyzing for every class of POC at every location, a subset of these POCs will be used as indicators to identify whether a release to the environment has occurred in a given location." This statement does not provide a reasonable, clear, discussion of the elimination of POCs. The Work Plan leaves the reader to make assumptions because it does not name POCs as analytes and because it does not establish a clear relationship between the generic POC terms (e.g., "oil and grease") and any proposed analytes or analytical group (e.g., TPH). While NMED does not object to the use of indicator parameters, the Permittee must provide complete and sound justification for the use of each indicator parameter. The Work Plan fails to adequately develop a clear connection between the proposed analytes and their target levels. The Work Plan refers to these as Applicable or Relevant and Appropriate Requirement (ARAR) action level criteria. The ARAR action level criteria are also referred to as trigger levels, target levels, and action levels. As shown in the Table Attachment, the Work Plan does not list or describe the target levels or ARARs for semi-volatile organic compounds (SVOCs) for either soil or groundwater, in spite of its inclusion on the list of POCs, released chemicals, and list of analytes. The Table Attachment demonstrates that the Work Plan discusses the soil geotechnical parameters within the section describing the target levels or ARARs, despite the absence of target levels for geotechnical parameters. Additionally, the Work Plan does not contain any discussion of soon-to-be-established facility background concentrations. The Permittee must revise all relevant portions of the Work Plan to include clear, logical, consistent discussion of historical released chemicals, POCs, proposed analytes, target levels, and facility background concentrations. This discussion must include a clear map of progress from a released chemical to an analyte or analyte group to a target/action/trigger level. The discussion must include a scientific basis for the exclusion of any POC from the analyte list. Any listed POC, whether as an individual chemical or a general chemical group, must be clearly connected to the proposed analyte(s). Any proposed analyte must also have a target level and facility background concentrations, where established. The Permittee must revise the proposed analytical suite for metals from Resource Conservation and Recovery Act (RCRA) 8 metals to the target analyte list (TAL) metals and add sulfate and chloride. The Permittee must revise the Work Plan, including appropriate tables and appendices, to include laboratory detection limits, quality assurance (QA) and quality control (QC) parameters, target levels, and facility background concentrations for TAL metals, sulfate, chloride, and any other added analytes. Comments 5, 20, 23, 28, 29, 30, 31, 32, 36, 37, 39, 40, 41, 42, 43, 44, and 45 provide specific example on various aspects of this comment.	the Work Plan.

Response to Comments Final Triad Approach Dynamic Work Plan RCRA Facility Investigation SWMU 183 Basewide Sewer System Holloman Air Force Base, New Mexico, February, 2008				
Comment No.	**Section**	**Page**	**Comment**	**Response**
11	1.11.2	1-10	**Section 1.11.2, page 1-10, 2nd paragraph, 1st sentence** The sentence states, "[t]he primary findings of the study were that some of the sewer exhibited system structural and hydraulic problems, but that 'the most significant system problem appeared to be an excessive amount of steady inflow into the system'. [emphasis added]" The Permittee must revise the sentence to correct the grammatical error.	Concur. This sentence now appears in Section 1.9.2 (2nd paragraph, 1st sentence) of the Work Plan and has been revised as follows: "The primary findings of the study were that some of the sewer system exhibited structural and hydraulic problems, but that "the most significant system problem appeared to be an excessive amount of steady inflow into the system".
12	1.11.3	1-11	**Section 1.11.3, page 1-11, 1st paragraph, 1st sentence** The sentence states, "[a]n RFI [RCRA Facility Investigation Report] Work Plan was prepared in response to a USEPA policy issuance, wherein sewer systems were to be treated and characterized as SWMUs." The Permittee must revise the sentence to include the policy reference and must list the full reference in the list of References. Refer to Comment 3.	Concur. This sentence now appears in Section 1.9.3 (1st paragraph, 1st sentence) of the Work Plan and has been revised to reference this USEPA policy, as follows: "A Phase II RFI Work Plan was prepared in response to the U.S. Environmental Protection Agency (USEPA) policy issuance, wherein sewer systems were to be treated and characterized as SWMUs. As stated in the *Federal Register* (p. 30809, U.S. Government Printing Office, 1990), the USEPA defines a SWMU as "any discernible unit at which solid wastes have been placed at any time, irrespective of whether the unit was intended for the management of solid or hazardous waste. Such units include any area at a facility at which solid wastes have been routinely and systematically released"." This reference has also been added to Section 11(References) as follows: "U.S. Government Printing Office. 1990. *Federal Register*, Proposed Subpart S Rules, Volume 55, No. 145. Washington, D.C."

Response to Comments Final Triad Approach Dynamic Work Plan RCRA Facility Investigation SWMU 183 Basewide Sewer System Holloman Air Force Base, New Mexico, February, 2008				
Comment No.	**Section**	**Page**	**Comment**	**Response**
13	1.11.5, 5.2, Table 1-1, References	1-12, 5-1, Table 1-1, References	**Section 1.11.5, page 1-12, 2nd paragraph, 2nd sentence and 3rd paragraph, 2nd sentence; Section 1.11.5, page 1-12, 2nd paragraph, 3rd bullet point; Section 5.2, page 5-1, 1st paragraph, 5th bullet point; Table 1-1, all; and References** Section 1.11.5, Section 5.2, and Table 1-1 provide inconsistent information regarding the permitted status of SWMUs. First, a discrepancy appears in Section 1.11.5 regarding the timing of the inquiry into the permitted status of the oil water separator (OWS) SWMU sites, as shown in the following excerpts: • **Section 1.11.5, page 1-12, 2nd paragraph, 2nd sentence:** "According to permit Table A (i.e., sites requiring corrective action) and permit Table B (i.e., sites requiring No Further Action), the following is the status of SWMU sites as of September 30, 2005." • **Section 1.11.5, page 1-12, 2nd paragraph:** "Table 1-1 of this Work Plan lists each of the OWS SWMU sites and their current (2007) permitted status." Table 1-1 lists the number of SWMUs requiring no further action and the specific number of OWS in a manner inconsistent with similar information described in Section 1.11.5 and Section 5.2. The following excerpts show these discrepancies: • **Table 1-1:** The "Table B" portion of Table 1-1 contains duplicate listings of various SWMUs. The table indicates 38 OWS exist at HAFB and 33 SWMU sites require no further action. • **Section 1.11.5, page 1-12, 2nd paragraph, 3rd bullet point:** "Table B: 36 sites are listed as requiring No Further Action (NFA)." • **Section 5.2, page 5-1, 1st paragraph, 5th bullet point:** 42 OWS The Permittee must revise Section 1.11.5, Section 5.2, and Table 1-1 to contain consistent information regarding the number of OWS sites at HAFB. If a distinction exists between OWS sites, in general, and OWS SWMU sites, then the Permittee must provide a detailed discussion of this distinction in Section 1.11.5 and as a footnote to Table 1-1. The Permittee must also revise Table 1-1 to contain only individual listings of each SWMU. If the information to be communicated is such that duplicate listings are necessary, the Permittee must provide an explanation for this duplicate listing in the table footnotes. Furthermore, in Table 1-1, the Permittee must include definitions for all abbreviations. The Permittee must include the reference to the HAFB RCRA Operating Permit (e.g., proper title, permit number, year of publication.) in all appropriate sections, sentences, phrases, and tables. The Permittee must indicate the most recent update to the status of the permitted units (e.g., Notification letter). Refer also to Comments 3 and 7.	Concur. The referenced text, along with Table 1-1 has been revised to contain current and consistent information regarding the number of OWS SWMU sites at HAFB. Table 1-1 has been revised to contain only individual listings for each SWMU, along with including definitions for all abbreviations. A reference to the current HAFB RCRA Operating Permit (Holloman AFB, NM Hazardous Waste Facility Permit No. NM6572124422, February 2004 [Tables A and B, revised September 2005]) has been added to all appropriate sections, sentences, phrases, and tables within the RFI Work Plan.

Response to Comments Final Triad Approach Dynamic Work Plan RCRA Facility Investigation SWMU 183 Basewide Sewer System Holloman Air Force Base, New Mexico, February, 2008				
Comment No.	**Section**	**Page**	**Comment**	**Response**
14	2.3 and Figures	2-1 through 2-3 and Figures	**Section 2.3, pages 2-1 through 2-3, all and Figures** The section describes the surface water and hydrology and includes various arroyos and surface water features by name. In Section 2.3, the last sentence beginning on page 2-1 states, "HAFB is dissected by several southwest trending arroyos that control the surface drainage." However, none of the figures included with the Work Plan depict any of these features. The Permittee must revise the Work Plan to include a figure illustrating the described features. The Permittee must also revise Section 2.3 to include reference to the new figure and update the list of figures. Also refer to Comments 3 and 17.	Concur. A new Figure 2-1 entitled "Surface Drainages, Holloman AFB" has been created to illustrate all of the surface drainages that are located within the HAFB boundaries. Section 2.3 has also been revised to include a reference to the new Figure 2-1 along with updating the list of Figures presented in the Table of Contents. The original Figure 2-1 (Basewide Groundwater Flow Direction) is now Figure 2-2.
15	2.5 and 4.1	2-4 and 4-1	**Section 2.5, page 2-4, 2nd paragraph, last two sentences and Section 4.1, page 4-1, 2nd paragraph, all** The following sections do not contain references for the referenced guidelines: • **Section 2.5, page 2-4, 2nd paragraph, last two sentences:** "TDS [total dissolved solids] concentrations greater than 10,000 mg/L [milligrams per liter] exceed the New Mexico Water Quality Control Commission (WQCC) limit as potable water and thus, the groundwater beneath HAFB has been designated as unfit for human consumption. Likewise, USEPA guidelines have identified the groundwater as Class IIIB water source, characterized by TDS concentrations exceeding 10,000 mg/L." • **Section 4.1, page 4-1, 2nd paragraph, all:** "There are no supply wells on the Base because the preponderance of groundwater beneath HAFB contains water with an average TDS concentration greater than 10,000 mg/L (see Figure 4-1) which exceeds the New Mexico WQCC limit as potable water and thus, the groundwater beneath HAFB has been designated as unfit for human consumption. Likewise, USEPA guidelines have identified the groundwater as a Class IIIB water source, characterized by TDS concentrations exceeding 10,000 mg/L." The Permittee must revise these sections and the list of References to include the policies and guidelines specified. Refer also to Comment 3.	Concur. These sections have been revised to include the following specified NMED and USEPA policies and guidelines: • New Mexico Administrative Code 20.6.2, *Environmental Protection Water Quality Ground and Surface Water Protection*, September 15, 2002 • U.S. Environmental Protection Agency, *Guidelines for Ground-Water Classification Under the EPA Ground-Water Protection Strategy*, November, 1986 Furthermore, these NMED and USEPA documents are included in Section 11(References).
16	2.5	2-4	**Section 2.5, page 2-4, 3rd paragraph, last sentence** The sentence states, "[t]he only production water well, used for livestock irrigation, is located approximately 7 miles southwest of HAFB." According to the U.S. Geological Survey, 7.5 minute topographic quadrangle, "Holloman," two wells exist approximately two miles east-northeast of HAFB. The Permittee must indicate the source of the information listed in the cited sentence. The Permittee must consult additional sources of information, such as the New Mexico Office of the State Engineer, and determine the location of nearby wells. The Permittee must modify the paragraph to include the new, verified information and cite the source(s) of information. The Permittee must also include these cited sources in the list of References. Refer also to Comment 3.	Concur. Table 2-1 was added which contains details regarding nearby wells. Additionally, Figure 2-3 "Groundwater Wells Located within a 4-Mile Radius of HAFB" was created to show the locations of these off base wells. The following information regarding the proximity of groundwater wells in the vicinity to HAFB has been added to the referenced text in Sections 2.5 and 4.1: "According to the groundwater well inventory (presented in Table 2-1) prepared by the New Mexico Office of the State Engineer, there are approximately 25 domestic, 15 commercial, 7 irrigation, and 3 livestock wells located within a 4-mile radius of HAFB (New Mexico Water Rights Reporting System [NMWRRS] database, 2009). As shown on Figure 2-3, these wells are located along HAFB's northern and eastern boundaries (upgradient and cross gradient respectively)." The NMWRRS reference has also been added to Section 11 (References).

Response to Comments Final Triad Approach Dynamic Work Plan RCRA Facility Investigation SWMU 183 Basewide Sewer System Holloman Air Force Base, New Mexico, February, 2008				
Comment No.	**Section**	**Page**	**Comment**	**Response**
17	2.3 and 2.6	2-1 through 2-3, 2-5	**Section 2.6, page 2-5, 1st paragraph, last sentence and Section 2.3, pages 2-1 through 2-3, all** Section 2.6 states, "[t]his soil type is located only across the main drainage area for the installation." Section 2.3 discusses the Surface Water and Hydrology for HAFB and the surrounding area and includes the names of various surface water features. However, Section 2.3 does not designate any of the named surface water features as the "main drainage area." Without a map showing the surface water features, the disparate pieces of information do not lead to a coherent picture of the HAFB surface water regime. The Permittee must revise Sections 2.3 and 2.6 to specify the name of the "main drainage area." Refer also to Comment 14.	Concur. The text in Sections 2.3 and 2.6 has been revised to reference the Lost River Drainage Basin which is the main drainage area within the northern half of HAFB. Additionally, a new Figure, (Figure 2-4), has been created to illustrate the different surface soil types at HAFB. Section 2.6 has also been revised to include a reference to the new Figure 2-4 along with updating the list of Figures presented in the Table of Contents.
18	4.4	4-2	**Section 4.4, page 4-2, 2nd sentence** The sentence states, "[t]his information was generated in 2005 by Bhate during development of the EA [Environmental Assessment] for the wastewater utility privatization evaluation. [emphasis added]" Neither the section nor the list of References contains a citation for this work. The Permittee must revise the section and the list of References to include the reference for this work. Refer also to Comment 3.	Concur. Section 4.4 (Potential Biological Receptors) and Section 11 (References) have been revised to include a citation for the Environmental Assessment conducted by Bhate in 2005. New Reference added to Section 11: Bhate, January 2006. *Final Environmental Assessment, Wastewater Utility System Privatization, Holloman Air Force Base, New Mexico*.
19	4.4.2.4	4-4	**Section 4.4.2.4, page 4-4, 2nd sentence** The section states, "[b]ird censuses are ongoing at HAFB and a complete list of birds can be found in the HAFB Integrated Natural Resource Management Plan (INRMP)." Neither the section nor the list of References contains a citation for this document. The Permittee must revise the section and the list of References to include the reference for this document. Refer also to Comment 3.	Concur. Section 4.4.2.4 (Birds) and Section 11 (References) have been revised to include a citation for the Integrated Natural Resource Management Plan (INRMP). New Reference added to Section 11: Holloman Air Force Base. 2001. *Integrated Natural Resource Management Plan: Holloman Air Force Base, New Mexico.*
20	5.2	5-3	**Section 5.2, page 5-3, 2nd paragraph** The second paragraph of Section 5.2 provides general geochemical information about potential contaminants. The paragraph states the following: "Metals, SVOCs, POLs [petroleum, oil, and lubricants], and oil and grease have a low degree of mobility in the subsurface. The presence of these classes of POCs [pollutants of concern] is likely to be limited to the soils in the vicinity of the leak. Nitrate is created by the nitrification of ammonium in the sewer line where reducing conditions prevail. Nitrate is not sorbed significantly to soils and will likely only be found in the pore water in the unsaturated zone. Nitrate will be likely to migrate to the water table and then with groundwater flow if released in sufficient quantities.	Concur. Sulfate has been added to the list of COPCs presented in Section 5.7. As discussed in the response to Comment 10, the entire decision making process (onsite screening and analysis involving immunoassay testing and onsite laboratory analysis) presented in the *Final Triad Approach Dynamic Work Plan SWMU 183-Basewide Sewer System, HAFB, NM* (Stone Environmental, Feb 2008) has been deleted and replaced with a more standard USEPA RFI sampling approach that includes a more comprehensive sampling matrix for offsite laboratory analysis.

Response to Comments Final Triad Approach Dynamic Work Plan RCRA Facility Investigation SWMU 183 Basewide Sewer System Holloman Air Force Base, New Mexico, February, 2008				
Comment No.	**Section**	**Page**	**Comment**	**Response**
			Similarly, chloride is quite mobile in the environment, but chloride is naturally abundant in the natural subsurface environment at HAFB. Phosphate is highly retarded by sorption both above and below the water table is not expected to migrate far unless a sustained release occurs for a long period of time." This portion of the conceptual site model discussion provides a limited description of the geochemistry of the POCs. The paragraph touches on changes in redox conditions within the sewer line and outside the sewer line. The discussion focuses solely on ammonium and nitrate; however, changes in redox conditions can significantly affect other POCs. For example, sulfide can experience rapid oxidation. Indeed, using field testing methods, it is difficult to obtain a stable, reliable measurement of sulfide concentration due to the rate of oxidation, assuming that sulfide is part of the list of analytes. It seems prudent that the list of POCs should include sulfate, while keeping in mind that the natural background groundwater may already have high sulfate concentrations. The Permittee must address this issue with a thorough discussion of the changes in redox conditions, the oxidation of sulfide, and a means of determining the sulfide concentrations, with the understanding that gypsum ($CaSO_4$) is prevalent at the site. The description of phosphate geochemistry also reveals the absence of continuity in the list of POCs versus the list of analytes. Refer also to Comment 10.	
21	6.1	6-1 through 6-13	**Section 6.1, pages 6-1 through 6-13, all** The first sentence of the first paragraph (page 6-1) states, "[t]he sampling strategy for the SWMU 183 Triad RFI has been designed according to the concepts and guiding principles of the USEPA's Triad Approach, specifically for dynamic work strategies." The sampling strategy proposes the use of various field screening methods. However, the Work Plan did not include any contingency procedures in the event that the proposed field methods do not perform as expected and provide useful data. The Permittee must revise the Work Plan to include alternate field techniques, a discussion of testing of the field techniques prior to mobilization to determine whether the proposed technique(s) will provide appropriate data, and a discussion of environmental/chemical conditions under which a particular field technique (e.g. immunoassay) can be used with confidence. Discussion of the operating limits of various field techniques will aid in the determination of the collected analytical data usability, particularly considering that the conditions at HAFB and within the sewer system (e.g., high total dissolved solids, high ion concentrations, redox extremes) have the potential to affect the analyses and the analytical results. The Permittee must revise the section to include a pre-test period and contingency plans in the event that a chosen method does not produce reproducible and reliable results.	Action Deferred. As previously discussed (response to Comment 10), the SWMU 183 Basewide Sewer System RFI Work Plan has been revised to remove all references to the USEPA's Triad Approach, and onsite analytical techniques (e.g., immunoassay, onsite laboratory analysis, etc.) will not be utilized during implementation of the SWMU 183 RFI. The revised sampling strategy (revised Section 6) will now utilize only USEPA SW-846 and Standard Methods (SM) analytical methods conducted by a NELAP accredited offsite laboratory, and all references to onsite analytical methods (e.g., immunoassay) have been deleted. Therefore a pre-test period and contingency plans in the event that a chosen onsite analytical method does not produce reproducible and reliable results will not be required.
22	6.1, 6.1.4, 6.2.1, 6.2.3, 7.3.1.1, 7.3.2.1	6-2, 6-8, 6-13, 6-16 through 6-18, 7-4, 7-5	**Section 6.1, page 6-2, 2nd bullet point; Section 6.1.4, page 6-8, 1st paragraph, 1st sentence; Section 6.2.1, page 6-13, 1st paragraph, 2nd bullet point; Section 6.2.3, pages 6-16 through 6-18, all; Section 7.3.1.1, page 7-4, all; and Section 7.3.2.1, page 7-5, 2nd bullet point** The Work Plan describes the installation of temporary monitoring wells for groundwater sampling. The following selected excerpts illustrate the planned installation and removal of temporary wells:	Concur. The SWMU 183 RFI Work Plan will be revised to include only the installation of permanent monitoring wells (see revised Sections 6.3.3.1 and 6.3.3.2). All references to the installation of temporary monitoring wells have been removed from the Work Plan. Additionally, all of the permanent wells installed during the SWMU 183 RFI will remain in place until NMED approves their removal.

Response to Comments Final Triad Approach Dynamic Work Plan RCRA Facility Investigation SWMU 183 Basewide Sewer System Holloman Air Force Base, New Mexico, February, 2008				
Comment No.	**Section**	**Page**	**Comment**	**Response**
			• **Section 6.1, page 6-2, 2nd bullet point:** "Groundwater samples will be collected from: Temporary 1-inch PVC [polyvinyl chloride] pre-pack well screens installed via DPT [direct push technology] in areas where groundwater is located less than 25 ft bgs [and] two-inch outside diameter PVC wells installed via HSA [hollow stem auger] where groundwater is located at depths at, or greater than, 25 ft bgs where the practicable use of DPT is exceeded." • **Section 6.1.4, page 6-8, 1st paragraph, 1st sentence:** "As indicated in Section 6.1, shallow groundwater samples will be collected from temporary 1-inch PVC pre-pack well screens installed via DPT and deeper groundwater samples will be collected from 2-inch outside diameter PVC wells installed via HAS technology." • **Section 6.2.1, page 6-13, 1st paragraph, 2nd bullet point:** "Groundwater: a.) DPT-installed temporary wells [and] b.) HSA-installed temporary wells." • **Section 6.2.3, pages 6-16, 1st paragraph, 2nd through 4th sentences:** "Groundwater samples will be collected from small diameter temporary wells installed through the DPT soil core holes or HSA soil boreholes as described in the preceding sections. In areas of the site where the depth to groundwater is less than 25 feet bgs (e.g., south of Dezonia Road) temporary wells will be installed through the outer casing of the DT325 dual tube coring tool. Where the water table is deeper than 25 feet bgs the temporary wells will be installed through the HSA auger casing advanced using a conventional rotary drill rig." • **Section 6.2.3.1, page 6-17, last paragraph:** "Once sampling is completed, the well will be pulled out if possible and the hole will be abandoned in accordance with the procedures described in Bhate's SOP B-10." • **Section 6.2.3.2, page 6-17, last paragraph:** "Once sampling is completed, the well will be pulled out if possible and the hole will be abandoned in accordance with the procedures described in Bhate's SOP B-10." • **Section 7.3.1.1, page 7-4, all:** "All soil samples collected from a temporary well boring will have the temporary well designation followed by the sample ending depth (groundwater samples will not contain a sample depth designator)." • **Section 7.3.2.1, page 7-5, 2nd bullet point:** "A groundwater sample collected for offsite analyses, from a temporary well, at pre-designated sampling location #52: SR052-TW-OFF" The newly constructed wells must remain in place until the NMED approves their removal. The Permittee must protect the temporary well from surface water infiltration (runon/runoff). The Permittee must alter all appropriate sections to include this information. Also refer to Comment 35.	
23	6.1, 6.1.5.2, 6.2.2.1, 6.3.2.1.2, Figure 6-1, Table 6-1, Table 6-2	6-2, 6-9, 6-15, 6-23, Figure 6-1, Table 6-1, Table 6-2	**Section 6.1, page 6-2, last paragraph, last sentence; Section 6.1.5.2, page 6-9, 2nd paragraph, 1st sentence; Section 6.2.2.1, page 6-15, last paragraph, 1st sentence; Figure 6-1; Table 6-1; Table 6-2; and Section 6.3.2.1.2; page 6-23, 1st full paragraph, 1st sentence** Together, the text in the sections, the information in the figure, and the table descriptions	Concur. As previously discussed (response to Comment 10) the SWMU 183 Basewide Sewer System RFI Work Plan has been revised (see revised Section 6) to remove all references to the USEPA's Triad Approach and onsite analytical techniques (e.g., immunoassay, onsite laboratory analysis, etc.). The analytical approach will now utilize only offsite laboratory analytical methods. Additionally all soil and groundwater analytical data will be

Response to Comments Final Triad Approach Dynamic Work Plan RCRA Facility Investigation SWMU 183 Basewide Sewer System Holloman Air Force Base, New Mexico, February, 2008				
Comment No.	**Section**	**Page**	**Comment**	**Response**
			inconsistently describe sample analyses. The following excerpts illustrate these inconsistencies: • **Section 6.1, page 6-2, last paragraph, last sentence:** "Offsite analyses will be performed for additional analytes where onsite results indicate a potential release location, or at a 10% frequency for locations whose onsite results indicate no release has occurred." • **Section 6.1.5.2, page 6-9, 2nd paragraph, 1st sentence:** "Where onsite analytical or screening results indicate contaminants in soils at concentration levels below the applicable SSLs or nitrate trigger level, 10 percent of the samples will be submitted for offsite analysis of SVOCs, RCRA 8 Metals, and radionuclides." • **Section 6.2.2.1, page 6-15, last paragraph, 1st sentence:** "At 10% of the locations where screening analyses results indicate no release has occurred, samples will be collected for the full analyte suite as described in Section 6.1.5.2 of this Work Plan." • **Figure 6-1** indicates that the concentrations of volatile organic compounds (VOCs), nitrate, polyaromatic hydrocarbons (PAHs), and total petroleum hydrocarbons (TPH), as well as general radionuclide measurements will occur onsite. Figure 6-1 further indicates that 10% of these samples with concentrations and counts less than the reporting limit or the soon-to-be-established facility background concentrations will proceed for off-site analyses and fulfill quality control requirements. • **Table 6-1** does not list these analytes as off-site or as definitive data. These analytes are not listed in Stage 2 – Expanded Analyte List Analysis as presented in Figure 6-1 or Table 6-1. • **Table 6-2** does not list these analytes within the off-site laboratory parameters. For example, Section 6.3.2.1.2 states, "[a]ll samples having positive detections of PAHs above the RL, and 10% of the total PAH samples with results below the RL, will be submitted to the offsite laboratory facility for definitive analyses to identify and quantify any specific PAH compounds." Yet, Table 6-2 does not specify PAHs in the off-site laboratory analyte list. The Permittee must revise the Work Plan to include the off-site laboratory analyses, with definitive data, for 10% of samples with results below the RL or the soon-to-be-established Facility background concentrations (as appropriate) for all analytes of Stage 1, including VOCs, nitrate, sulfate, chloride, PAH, TPH, radionuclides, and TAL metals to verify the screening results. Refer also to Comments 5 and 10.	compared to the ARAR action level criteria (see revised section 6.2.1) including the HAFB background concentrations for inorganic constituents (pending NMED approval of the *Basewide Background Study Report, Holloman Air Force Base, New Mexico* [NationView|Bhate JV III, 2009]).
24	6.1.1	6-3	**Section 6.1.1, page 6-3, bullet at top of page** The text for the bullet states, "[i]mplement vapor intrusion evaluation based on USEPA guidance where existing buildings or areas of planned future development might be at risk of VOC vapor intrusion." The sentence does not indicate a reference for the USEPA guidance. The Permittee must revise the section and the list of References to include a proper citation for this document. See Comment 3.	Action Deferred. The Triad Dynamic Work Strategy (Section 6.1.1) has been removed from the SWMU 183 Work Plan. The vapor intrusion evaluation will be conducted as part of the Risk Assessment (new Section 7). Specifically the Johnson & Ettinger model and USEPA guidance (*User's Guide for Evaluating Subsurface Vapor Intrusion into Building*, February, 2004) will be used to develop the target levels for the indoor inhalation of vapors from subsurface soil and groundwater (see new Section 7.2.6). . New Reference added to Section 11: USEPA, February 2004a. *User's Guide for Evaluating Subsurface Vapor Intrusion into Building.*

Response to Comments Final Triad Approach Dynamic Work Plan RCRA Facility Investigation SWMU 183 Basewide Sewer System Holloman Air Force Base, New Mexico, February, 2008				
Comment No.	**Section**	**Page**	**Comment**	**Response**
25	6.1.5.3, 7.3.1.2, Figure 6-2, Figure 6-3	6-10, 7-4, Figure 6-2, Figure 6-3	**Section 6.1.5.3, page 6-10, 3rd paragraph, 4th and 6th sentences; Section 6.1.5.3, page 6-10, 4th paragraph, 1st sentence; Section 7.3.1.2, page 7-4, 1st sentence; Figure 6-2; and Figure 6-3** Section 6.1.5.3, Section 7.3.1.2, Figure 6-2, and Figure 6-3 describe the contaminant delineation for soil and groundwater. However, the sections and figures inconsistently describe the contaminant delineation plan, as the following excerpts indicate: • **Section 6.1.5.3, page 6-10, 3rd paragraph, 4th sentence:** "Sampling locations along each transect will be at a 50 foot spacing and will be initiated in the transect center zone, with subsequent sampling locations located horizontally toward each of the transect's two flanks." • **Section 6.1.5.3, page 6-10, 3rd paragraph, 6th sentence:** "Sampling locations within the 100 foot downgradient transect will also be at a 50 foot spacing, initiated in the transect center zone." • **Section 6.1.5.3, page 6-10, 4th paragraph, 1st sentence:** "Soil contamination will be delineated using and orthogonal grid-based strategy, wherein, soil samples will be collected at a 50 ft spacing from locations oriented orthogonally (4 perpendicular azimuths) centered on the original pre-designated sampling location of concern." • **Section 7.3.1.2, page 7-4, 1st sentence:** "As described in Section 6.1 of this Work Plan, soil contamination in Identified Release Areas will be delineated using an orthogonal grid-based strategy, wherein, soil samples will be collected at a 50 ft spacing from locations oriented orthogonally (4 perpendicular azimuths) centered on the original pre-designated sampling location of concern." • **Figure 6-2:** According to Figure 6-2, the groundwater samples will be collected using 25-foot spacing. • **Figure 6-3:** two flow diagram boxes in Figure 6-3 indicate the soil samples will be collected using 20-foot spacing. The Permittee must modify Section 6.1.5.3, Section 7.3.1.2, and Figure 6-3 to state that soil and groundwater samples will be collected at 25-foot intervals.	Action Deferred. As previously discussed, Section 6 (Sampling and Analysis Plan for Characterization of Releases of Hazardous Waste) and the entire SWMU 183 RFI Work Plan have been revised to remove all references to the USEPA's Triad Approach. The location of sample points will be revised to be based on the criteria established by the NMED in Comment 6. The revised Work Plan incorporates a new phased approach. Phase I (new Section 6.2.2.1) will involve the collection of subsurface soil samples at 52 pre-determined locations (below the sewer line) based on the location criteria established in NMED Comment 6. Phase II (new Section 6.2.2.2) will involve the installation of monitoring wells and the collection of groundwater samples at soil boring locations where a COPC has been detected above an ARAR for soil (described in Section 6.2.1.1). Additionally, a subsurface soil sample will be collected from the capillary fringe or within the saturated zone from all monitoring well boreholes (Phase II) to vertically delineate soil contamination.
26	6.1.5 and 6.2.2	6-8 through 6-11, 6-14 through 6-16	**Section 6.1.5, pages 6-8 through 6-11, all and Section 6.2.2, pages 6-14 through 6-16, all** Both sections provide information regarding soil sampling. Neither section indicates whether the logging of soils will occur during drilling activities. The Permittee must clearly state within the Work Plan that soil logs will be recorded and provide a citation to the appropriate SOP.	Concur. The text in new Sections 6.3.2 and 6.3.3.2 states that soils will be logged during drilling activities as per: HAFB SOP-7 (for direct push technology [DPT] soil sampling) and Bhate SOP-1 (for hollow stem auger soil sampling). These SOPs are now specifically referenced in the text (Section 6.3 – Sampling Procedures).
27	6.2.2.1	6-14	**Section 6.2.2.1, page 6-14, last paragraph, 1st and last sentences** The Permittee must clarify whether the word "round" actually refers to "Stage," in the following sentences: • **First sentence:** "The first round of samples will be collected using a Geoprobe® MacroCore® soil coring tool driven by a Geoprobe Systems® 66 series rig or equivalent as described in HAFB SOP-4."	Concur. Due to the abandonment of the Triad RFI approach, all references to "rounds" and "stages" have been removed from the SWMU 183 RFI Work Plan. As previously discussed in the response to Comment 25, the SWMU 183 RFI will now be implemented in two phases (see revised Section 6.2). Additionally, all Phase I soil samples will be obtained with the Geoprobe Systems® DT325 Dual Tube Sampling System (new Section 6.3.2.2). Subsequent mobilizations for additional soil and groundwater delineation will now be referred to as Phase II.

Response to Comments Final Triad Approach Dynamic Work Plan RCRA Facility Investigation SWMU 183 Basewide Sewer System Holloman Air Force Base, New Mexico, February, 2008				
Comment No.	**Section**	**Page**	**Comment**	**Response**
			• **Last Sentence**: "This second round of sampling will be accomplished using a Geoprobe Systems® DT325 Dual Tube Sampling System (coring tool) in accordance with the Standard Operating Procedure (Geoprobe Systems® Technical Bulletin MK3138) in the Basewide QAPP Addendum (in Appendix A of this Work Plan)." If "round" is intended to indicate "Stage," the Permittee must replace the words "round" with the word "Stage." If the word "round" is intended to communicate separate activities within a particular Stage, then the Permittee must revise this section and all other relevant sections, figures, and tables to clearly communicate separate activities within a Stage.	

28	6.3.1, Figure 6-1, Table C-1 of Appendix C	6-20, Figure 6-1, Table C-1 of Appendix C	**Section 6.3.1, page 6-20, 1st and 2nd paragraphs, all; Figure 6-1; and Table C-1 of Appendix C**
			Section 6.3.1 and Figure 6-1 describe the process to evaluate whether a release has occurred. The Work Plan does not include comparison to the soon-to-be-established facility background concentrations, as illustrated in the following excerpts:
			• **Section 6.3.1, page 6-20, 1st paragraph**: "The analytical methods outlined in Table 6-1 of this Work Plan were selected based on their ability to provide reliable results which can be used to determine whether a given contaminant (or contaminant class) is present at concentrations:
			  ○ Above reporting limits (RLs);
			  ○ Above RLs and below its respective ARAR action level criteria, or
			  ○ Above its respective ARAR action level criteria."
			• **Section 6.3.1, page 6-20, 2nd paragraph**: "In several cases, laboratory method detection limits (MDLs) will be used to compare to ARARs. Concentrations that fall between the practical quantitation limits (PQL) and the MDL will be qualified accordingly. Exceptions to meeting ARARs are listed in Section 6.3.3 below."
			• **Figure 6-1**: The figure indicates that the analytical result will be compared to the reporting limit and "criteria" or the ARAR.
			• **Table C-1**: The table contains the target levels for soil and groundwater as derived from the NMWQCC groundwater standards, *NMED TPH Screening Guidelines* (October 2006), *NMED Technical Background Document for Development of Soil Screening Levels* (June 2006), EPA National Priority Drinking Water Standards MCLs, and the *Soil Screening Guidance for Radionuclides: Technical Background Document* (October 2000). However, the table does not include the soon-to-be-established facility background concentrations or the method detection limits (MDLs), where appropriate.
			
			To effectively use the data generated from the 2008 Facility Background Study, the Permittee must revise the figure, relevant portions of Section 6.3.1, Table C-1, and other applicable sections and figures to include the comparison of sampling data results to the soon-to-be-established facility background concentrations and the reporting limits. The reporting limit may be used as the target level only if no other target level (e.g., SSL, MCL) exists. Refer also to Comments 5 and 10.
				Concur. All soil and groundwater analytical data will be compared to the ARAR action level criteria (Section 6.2.1) including the HAFB background concentrations for inorganic constituents (pending NMED approval of the *Basewide Background Study Report, Holloman Air Force Base, New Mexico* [NationView|Bhate JV III, 2009]). Furthermore, Appendix C (ARARs) and Figure 6-1 presented in the *Final Triad Approach Dynamic Work Plan SWMU 183-Basewide Sewer System, HAFB, NM* (Stone Environmental, Feb 2008) has been deleted from the Work Plan. The ARAR evaluation criteria and RLs are presented in Table 4-2 (Summary of Laboratory QC Limits) in the Quality Assurance Project Plan (QAPP) Addendum included as Appendix A of the Work Plan.

Response to Comments Final Triad Approach Dynamic Work Plan RCRA Facility Investigation SWMU 183 Basewide Sewer System Holloman Air Force Base, New Mexico, February, 2008				
Comment No.	**Section**	**Page**	**Comment**	**Response**
29	6.1.3.1.1, 6.1.5.1, 6.1.5.2, Figure 6-1, Table 6-1	6-3, 6-8, 6-9, Figure 6-1, Table 6-1	**Section 6.1.3.1.1, page 6-3; Section 6.1.5.1, page 6-8, 4th paragraph, all; Section 6.1.5.1, page 6-9, 3rd paragraph, all; Section 6.1.5.2, page 6-9, 3rd paragraph, 2nd sentence; Figure 6-1; and Table 6-1** The Work Plan inconsistently describes the collection and analysis of soil and groundwater samples for pesticides and herbicides. The following excerpts demonstrate these inconsistencies: • **Section 6.1.3.1.1:** This Section states that pesticides/herbicides are included in the soil analytical suite. • **Section 6.1.5.1, page 6-8, 4th paragraph, all**: "Soil samples will be analyzed in an onsite laboratory for VOCs using gas chromatography / mass spectrometry (GC/MS-EPA 8260) and gas chromatography / flame ionization detection (GC/FID-ASTM D6520) and nitrate (NO3) using ion chromatography (IC) via EPA Method 300.0. Soil samples will be screened in the onsite laboratory for PAHs and TPH using field fluorometer analytical test kits as primary indicators of a potential sewer release. Soils will also be field-screened by the sampling team for the presence of radionuclides using a hand held alpha beta survey instrument (Ludlum 44-9). Additional sample volume will be collected for offsite analysis of additional analytes as described in Sections 6.2.2.1 and 6.2.2.2 of this Work Plan." This paragraph does not discuss pesticides/herbicide analyses for soil samples. • **Section 6.1.5.1, page 6-9, 3rd paragraph, all:** "[Groundwater] Samples collected from the two pre-designated sample locations closest to, and downgradient from, Building 374 will also be analyzed offsite for pesticide/herbicides based on its relevant and unique operational history." • **Section 6.1.5.2, page 6-9, 3rd paragraph, 2nd sentence:** "[During Stage 2,] Samples from the two closest pre-designated locations downgradient of Building 374 will also be analyzed offsite for pesticides/herbicides as described above." • **Figure 6-1:** The figure indicates the collection of both soil and groundwater samples from Building 374 for the off-site analysis of pesticides/herbicides during Stage 2. • **Table 6-1:** The table does not list pesticides/herbicides among the Stage 1 analytes, but they do appear in the Stage 2 analytical list. The Permittee must revise all pertinent sections, figures, and tables of the Work Plan to indicate the collection of both soil and groundwater samples for off-site analyses for pesticides and herbicides at Building 374. The Permittee must revise the Work Plan to state at which stage, either Stage 1 or Stage 2, the soil and groundwater samples for pesticide and herbicide analyses will be collected. The Permittee must include, where appropriate, discussion of analytical method, QA and QC, and detection limits; likely, these discussions occur elsewhere in the document. The Permittee must discuss the "relevant and unique operational history" for Building 374 to justify the limitation of pesticide and herbicide analyses at this location. Refer also to Comment 10.	Concur. Building 374, located in HAFB sewer system Sub-basin 4 (on Plate 2) was historically utilized as pesticide and herbicide storage area. This information has been added to Section 5.7 (Contaminants of Potential Concern). Additionally, pesticides and herbicides will be included in the suite of analytical parameters for all soil and groundwater samples that are collected within Sub-basin 4 (see Sections 6.3.2 and 6.3.3) for offsite analysis. As previously discussed in the response to Comment 25, all references to stages have been removed from the Work Plan. Furthermore, the QAPP Addendum (included as Appendix A of the Work Plan) presents all of the information regarding analytical methods (including QA and QC) and detection limits for all the offsite laboratory analyses. In addition, Figure 6-1 has been removed from the revised Work Plan.

Response to Comments Final Triad Approach Dynamic Work Plan RCRA Facility Investigation SWMU 183 Basewide Sewer System Holloman Air Force Base, New Mexico, February, 2008				
Comment No.	**Section**	**Page**	**Comment**	**Response**
30	6.1.3.4, 6.1.5.1, 6.2.2, 6.3.3, Figure 6-1, Table 6-1, Table 6-2	6-6, 6-8 through 6-11, 6-14 through 6-16, 6-25 through 6-27, Figure 6-1, Table 6-1, Table 6-2	**Section 6.1.3.4, page 6-6, 2nd paragraph, 1st sentence; Section 6.1.5.1, pages 6-8 through 6-11; Section 6.2.2, pages 6-14 through 6-16; Section 6.3.3, pages 6-25 through 6-27; Figure 6-1, Table 6-1, and Table 6-2** The sentence from Section 6.1.3.4 states, "[m]oisture content data will be derived from the soil analyses performed as part of the offsite analyses portion of the investigation [using USEPA Method 160.3M]." However, the collection of soil samples for moisture content data and the laboratory analysis are not described, listed, or mentioned in other relevant sections, figures or tables (e.g., Section 6.1.5.1, Section 6.2.2, Section 6.3.3, Figure 6-1, Table 6-1, and Table 6-2). The Permittee must revise all listed sections, figures, and tables to include the collection of soil moisture content data. Refer also to Comment 10.	Concur. The moisture content analysis by USEPA Method 160.3 will be conducted on all soil samples sent to the selected offsite laboratory (see Section 6.3.2)

Response to Comments Final Triad Approach Dynamic Work Plan RCRA Facility Investigation SWMU 183 Basewide Sewer System Holloman Air Force Base, New Mexico, February, 2008				
Comment No.	**Section**	**Page**	**Comment**	**Response**
31	6.1.3.1.3, 6.1.5.1, 6.1.5.2, 6.1.5.3, 6.3.2.1.5 Figure 6-1, Table C-1 of Appendix C	6-4, 6-8, 6-9, 6-10, 6-24, Figure 6-1, Table C-1 of Appendix C	**Section 6.1.3.1.3, page 6-4, 1st paragraph, 1st, 3rd, and 4th sentences; Section 6.1.5.1, page 6-8, last paragraph, last sentence; Section 6.1.5.1, page 6-9, 2nd paragraph, last sentence; Section 6.1.5.2, page 6-9, 2nd paragraph , last sentence; Section 6.1.5.2, page 6-9, 3rd paragraph, 3rd sentence; Section 6.1.5.3, page 6-10, 1st paragraph, 1st sentence; Section 6.3.2.1.5, page 6-24, all; Figure 6-1; and Table C-1 of Appendix C** The Work Plan inconsistently and contradictorily describes the characterization of radionuclides. The absence of a means to evaluate the radionuclide field-screening data (e.g., no target or action levels for gross alpha or gross beta) greatly affects the ability of the Work Plan to demonstrate a cohesive radionuclide characterization process, as only gross alpha and gross beta data will be collected during Stage 1. For example, on one hand, the Work Plan indicates that any exceedance of a radionuclide target level will lead to additional sample collection and off-site laboratory analyses for specific radioisotopes during Stage 2. On the other hand, the Work Plan indicates that any exceedance of a radionuclide target level will lead to a site-specific risk evaluation. Yet, the Work Plan also indicates that the only samples to be collected and submitted for off-site laboratory analyses for specific radioisotopes are 10% of those with gross alpha/gross beta results below the unlisted target level. Meanwhile, the Work Plan declares that the field screening for gross alpha and gross beta is not a useful means of detecting levels of radioactive material that are at or below the unlisted gross alpha/gross beta target level. The following excerpts describe these contradictory elements: • **Section 6.1.3.1.3, page 6-4, 1st paragraph, 1st, 3rd, and 4th sentences:** "Table A.1 (Decay Corrected) of USEPA's *Soil Screening Guidance for Radionuclides: Technical Background Document* (USEPA, October 2000), provides generic SSLs for 60 radionuclides in units of pico-curies per gram (pCi/g) and mg/kg, respectively. These generic SSLs are listed in Table C-1 in Appendix C of this Work Plan. If the SSLs presented in these tables are exceeded, a more site-specific evaluation will be performed to ensure that the site conditions and exposure pathways match those used to develop generic SSLs." (emphasis added) • **Section 6.1.5.1, page 6-8, last paragraph, last sentence:** "Soils will also be field-screened by the sampling team for the presence of radionuclides using a hand held alpha beta survey instrument (Ludlum 44-9)." (emphasis added) • **Section 6.1.5.1, page 6-9, 2nd paragraph, last sentence:** "The presence of radionuclides [in groundwater] will be determined in the field using a hand held alpha	Concur. Onsite field screening for radionuclides (with a Ludlum 449 scintillation meter) will only be conducted for health and safety purposes (see Section 6.3.2). Furthermore, all soil and groundwater samples collected from Sub-basins 8 and 9 (where the current and former Primate Research Institutes are located [potential source of radioactive tracers, see Section 5.4]) will be analyzed by the selected offsite laboratory for the following radionuclides: • Carbon-14 by Eastern Environmental Radiation Facility (EERF) Method C-01-1 • Tritium by USEPA 906.0 • Radium 226 by USEPA Method 903MOD • Radium 228 by USEPA SW846 Method 904 (soil) and USEPA Method 904 MOD (groundwater) The ARARs for radionuclides are presented in Section 6.2.1 and are included in Table 4-2 (Summary of Laboratory QC Limits) of the QAPP Addendum included in Appendix A of the Work Plan. Section 6.3 (Sampling Procedures) describes all of the radionuclide analyses presented above.

Comment No.	Section	Page	Comment	Response
			beta survey instrument (Ludlum 44-9)." (emphasis added) • **Section 6.1.5.2, page 6-9, 2nd paragraph, last sentence:** "Where results indicate contaminants in soils at concentration above the applicable SSLs or nitrate trigger level, the location will be documented as an identified release location and earmarked for delineation." (emphasis added) • **Section 6.1.5.2, page 6-9, 3rd paragraph, 3rd sentence:** "Where results indicate contaminants in groundwater at concentrations above the applicable criteria or nitrate trigger level, 100 percent of the samples will be submitted for offsite analysis of SVOCs, RCRA 8 Metals, radionuclides, and pesticides/herbicides (Building 374-related locations only)." (emphasis added) • **Section 6.1.5.3, page 6-10, 1st paragraph, 1st sentence:** "Contaminant delineation activities will be performed at locations where releases from the sewer have been identified and where concentrations are determined to exceed relevant criteria." (emphasis added) • **Section 6.3.2.1.5, page 6-24, all:** "Soil and groundwater samples will be passively screened for alpha-beta emitting radionuclides using a hand-held Ludlum 449 scintillation meter. The field-based radioactive survey is not intended to detect levels of radioactive material at or below the ARARs [emphasis added]. The survey is intended to determine if gross levels of radioactivity are present in the subsurface. Definitive radiochemical analyses will be conducted on the soil and groundwater samples where screening indicates no radionuclide presence, at a minimum frequency of 10%." (emphasis added) • **Figure 6-1:** The figure indicates that 100% of soil and groundwater samples with radionuclide field-screening results that exceed the radionuclide "criteria," reporting limit, and/or facility background values will be submitted for offsite laboratory analyses. Additionally, the figure shows that 10% of soil and groundwater samples with radionuclide field-screening results that fall below the radionuclide reporting limit values will be submitted for offsite laboratory analyses. • **Table C-1:** This table lists the applicable or relevant and appropriate requirement-based action levels (ARARs) for four radionuclides, which include carbon-14, tritium, radium-226, and radium-228. The table does not include any target levels for gross alpha or gross beta. The Permittee must specify in Section 6.1.3.1.3 and Table C-1 a target level, and the facility background levels for Stage 1 to allow for useful evaluation of the radionuclide field-screening data results. The Permittee must specify the detection limits and/or reporting limits for the radionuclide field-screening. The Permittee must modify the listed sections, tables, and figures, as well as other relevant portions of the Work Plan to provide a consistent and descriptive process for the collection, analysis, and evaluation of soil and groundwater samples for radionuclides. Refer also to Comments 5 and 10.	

Response to Comments Final Triad Approach Dynamic Work Plan RCRA Facility Investigation SWMU 183 Basewide Sewer System Holloman Air Force Base, New Mexico, February, 2008				
Comment No.	**Section**	**Page**	**Comment**	**Response**
32	6.1.5.2 and 6.1.5.3	6-9 and 6-10	**Section 6.1.5.2, page 6-9, 2nd paragraph, last sentence and 3rd paragraph, last 3 sentences; Section 6.1.5.3, page 6-10, 1st paragraph, 1st and 2nd sentences** The Work Plan does not clearly describe the process of characterizing a soil sample location when a measured concentration exceeds a specified target level. The reader must assume, using the descriptions in Section 6.1.5.2, 3rd paragraph (groundwater samples) and Section 6.1.5.3 that the soil samples will follow similar procedures. The following indicate the description differences: • **Section 6.1.5.2, page 6-9, 2nd paragraph, last sentence**: "Where results indicate contaminants in soils at concentration above the applicable SSLs or nitrate trigger level, the location will be documented as an identified release location and earmarked for delineation." • **Section 6.1.5.2, page 6-9, 3rd paragraph, last 3 sentences**: "Where results indicate contaminants in groundwater at concentrations above the applicable criteria or nitrate trigger level, 100 percent of the samples will be submitted for offsite analysis of SVOCs, RCRA 8 Metals, radionuclides, and pesticides/herbicides (Building 374-related locations only). The location will be documented as an identified release location and earmarked for delineation. The results from the Stage 2 sampling will be integrated into the data set generated during Stage 3 delineation." • **Section 6.1.5.3, page 6-10, 1st paragraph, 1st and 2nd sentences**: "Contaminant delineation activities [Stage 3] will be performed at locations where releases from the sewer have been identified and where concentrations are determined to exceed relevant criteria. The delineations will focus on the specific contaminants of concern identified during State 1 and/or Stage 2." The second excerpt provides discussion of the characterization process. At locations where contaminants exceed the target levels, 100 percent of the samples will be submitted to the off-site analytical laboratory for analyses. "Delineation" occurs during Stage 3. However, the first excerpt, which consists of a single sentence, provides the complete discussion on soil sample collection during Stage 1. Using the information from the second excerpt and the figures, the process used for groundwater samples likely occurs for soils. Neither paragraph describes whether any samples with contaminant concentrations below the target levels will be sent to the off-site laboratory for analyses. The Permittee must explicitly and clearly describe the process of contamination characterization at both soil and groundwater sampling locations. The Permittee must provide a clearer connection between the "delineation" listed in Section 6.1.5.2 and Stage 3, as described in Section 6.1.5.3. The Permittee must specify whether "delineation" signifies Stage 3 and refer to the section that discusses the delineation strategies. Refer also to Comment 10.	Concur. Section 6.2 has been revised to clearly describe the process of determining a sewer system release (Phase 1 subsurface soil sampling) and if groundwater has been impacted by soil contamination that is detected above ARARs (Phase II). As previously discussed (refer to response to Comment 10) the Triad Approach will not be utilized during the implementation of the SWMU 183 RFI. Additionally all references to "stages" have been removed from this Work Plan. If additional delineation of encountered contamination is required, it will be performed during a subsequent mobilization of equipment and personnel.
33	6.1.5.4	6-11	**Section 6.1.5.4, page 6-11, 2nd paragraph, 2nd bullet point, 3rd paragraph, all, and 4th paragraph, 1st sentence; and Figure 6-4** The section contains terminology without description or discussion. The following excerpts provide examples of undefined terminology:	Action Deferred/Concur. As previously discussed the Triad Approach has been completely removed from the SWMU 183 RFI Work Plan. All references to "primary screening questions", "primary screening steps", and "secondary screening process" have been removed from the Work Plan. The RFI Work Plan has been revised to fit the format of a standard RFI, without the use of an onsite laboratory, onsite screening (e.g. immunoassay analysis), or dynamic field decisions based on near real-time data analysis.

Response to Comments Final Triad Approach Dynamic Work Plan RCRA Facility Investigation SWMU 183 Basewide Sewer System Holloman Air Force Base, New Mexico, February, 2008				
Comment No.	**Section**	**Page**	**Comment**	**Response**
			• **Section 6.1.5.4, page 6-11, 2nd paragraph, 2nd bullet point:** "In close proximity to existing buildings or future buildings (see Primary Screening Question #2 for definition of close proximity)." (emphasis added) • **Section 6.1.5.4, page 6-11, 3rd paragraph, all:** "To assist in the vapor intrusion evaluation beyond the primary screening steps shown in Figure 6-4 of this Work Plan, a qualified risk assessor will establish appropriate risk and attenuation factors associated with the generic, semi-site specific, and site specific (Johnson and Ettinger Vapor Intrusion Model) risk assessment stages." (emphasis added) • **Section 6.1.5.4, page 6-11, 4th paragraph, 1st sentence:** "Soil-gas sampling and analyses may be performed, as deemed necessary, during the initial stages of the secondary screening process." • **Figure 6-4:** The figure does not list Primary Screening Question #2. The figure merely states, "Perform Primary Screening" and indicates, "Perform Secondary Screening Activities, Q4 – Generic Screening [and] Q5 – Semi-Site Specific Screening." (emphasis added) Additionally, Figure 6-4 does not define Q4, Q5, or Q-6 or provide a reference for the origination of the question and where the questions are in the reference. The Permittee must describe and define the underlined terms in Section 6.1.5.4 and Figure 6-4.	Furthermore, a new Section 7 (Risk Assessment Approach) has been added to the SWMU 183 Work Plan which clearly defines the risk assessment methodology including application of the Johnson and Ettinger Vapor Intrusion Model.
34	6.2 and 7.3.3.1	6-13 through 6-20, 7-6	**Section 6.2, pages 6-13 through 6-20, all; and Section 7.3.3.1, page 7-6, 1st paragraph, 6th bullet point** The Work Plan provides incomplete information regarding groundwater sample collection and monitoring well location documentation. Section 6.2 does not indicate whether the collected groundwater samples will be filtered or unfiltered, which indicator field parameters will be measured, or which SOPs will be used for any of these activities. Similarly, Section 7.3.3.1 does not specify how the location of the installed monitoring well will be recorded in its description of pertinent field and sampling information. For example, the 6th bullet of Section 7.3.3.1 states, "[l]ocation of sampling (e.g., monitoring well)" will be recorded. The Permittee must indicate how the monitoring well locations will be recorded (e.g., with global positioning coordinates). The Permittee must revise the sections to provide the missing information. Refer also to Comment 22.	Concur. Section 6.3.4 (Groundwater Sampling) has been revised to state that a 0.45 micron filter will be used to field filter groundwater samples collected for dissolved metals analysis. Additionally, Section 6.3.4.2 (Surveying) has been added to the Work Plan. A surveyor will survey each of the monitoring well locations using global positioning system (GPS).
35	6.2.8	6-19	**Section 6.2.8, page 6-19, 3rd paragraph, all** The paragraph states, "[d]econtamination and purge waters will be locally contained in 5 gallon pails and conveyed to a 1,000 gallon portable storage tank. Waters contained in the portable tank will be subsequently transported to the HAFB wastewater treatment plant for proper disposal." The Permittee must ensure all liquid wastes (e.g., decontamination rinses, purged groundwater from development and sampling activities) are containerized and maintained until disposal through the HAFB Wastewater Treatment Plant (WWTP), pending laboratory analysis. If the laboratory results indicate analyte concentrations exist below target concentrations, the Permittee may dispose of liquid wastes via the HAFB WWTP. The Permittee must revise the section to reflect these conditions.	Concur. Section 6.3.7 (Management of Investigation Derived Waste) has been revised. Generated liquid wastes (e.g., decontamination rinses and purged groundwater from monitoring well development and sampling activities) will be conveyed to a 1,000 gallon portable storage tank on a daily basis. The storage tank will be maintained until disposal through the HAFB Wastewater Treatment Plant, pending the results from the offsite laboratory analysis of the tank contents.

Response to Comments Final Triad Approach Dynamic Work Plan RCRA Facility Investigation SWMU 183 Basewide Sewer System Holloman Air Force Base, New Mexico, February, 2008				
Comment No.	**Section**	**Page**	**Comment**	**Response**
36	6.3.2.1	6-21 through 6-24	**Section 6.3.2.1, pages 6-21 through 6-24, all** The section describes the on-site analytical program for the analysis of VOCs, PAHs, TPH, nitrate, and radionuclides. However, the section does not indicate how the on-site laboratory wastes that will be generated from sample preparation and labware cleaning will be handled. Likewise, the section does not describe the use of method blanks during sample analysis in the on-site laboratory. The Permittee must revise the section to include summary of activities associated with the collection, analysis, and disposal of on-site laboratory waste, as well as the use of method blanks. The Permittee must also provide SOP references for these activities. Refer also to Comments 3 and 10.	Action Deferred. The Triad Approach will not be utilized during the implementation of the SWMU 183 RFI. Therefore, all references to an on-site laboratory, on-site laboratory waste, and on-site laboratory analytical methods have been deleted from the SWMU 183 RFI Work Plan.
37	6.3.2.1	6-21	**Section 6.3.2.1, page 6-21, 1st sentence and Section 6.3.2.1.5, page 6-24, all** The sentence states, "[t]he onsite analytical program will analyze for VOCs and nitrate, and screen for PAHs and TPH." The section does not address screening for radionuclides, which Section 6.3.2.1.5 describes. The Permittee must revise the section to include all radionuclides. Refer also to Comment 10.	Action Deferred. The Triad Approach will not be utilized during the implementation of the SWMU 183 RFI. Therefore, all references to the on-site laboratory analytical program have been removed from the SWMU 183 RFI Work Plan. Additionally, on-site screening for radionuclides will only be conducted for health and safety purposes.
38	6.3.2.1.1, 6.3.3, and 9	6-22, 6-26, and 9-3	**Section 6.3.2.1.1, page 6-22, 2nd full paragraph, last sentence; Section 6.3.3, page 6-26, 1st and 2nd bullet points, and Section 9 (References), page 9-3, 2nd reference** The Work Plan refers to outdated and current versions of the Department of Defense (DOD) *Quality Systems Manual (QSM) for Environmental Laboratories*, which serves as the basis for QC and QA protocols. The most recent version of the *QSM* is Version 3, dated January 2006. The following excerpts exhibit the use of the outdated version and the updated version: • **Section 6.3.2.1.1, page 6-22, 2nd full paragraph, last sentence**: "Appendix C of the HAFB Basewide QAPP provides quality control limits for the VOC analytical program that are based on the Department of Defense (DOD) *Quality Systems Manual (QSM) for Environmental Laboratories*, Version 1, dated October 2000." • **Section 6.3.3, page 6-26, 1st and 2nd bullet points**: o "'Self Declaration' statement for the TAL-DEN [TestAmerica Laboratories, Denver, Colorado] and GEL [General Engineering Laboratories] facilities' compliance with DOD QSM v.3 (Note: the statement included in the HAFB Basewide QAPP Addendum is for Severn Trent Laboratories who recently purchased TAL-DEN and TAL-LA [TestAmerica Laboratories, Los Angeles, California]. Revised statements are not currently available)." o "Standard Operating Procedure for TAL-LA addressing compliance with DOD QSM v.3" • **References**: United States Department of Defense, October, 2000. *Quality Systems Manual for Environmental Laboratories*, Version 1. The Permittee must revise these sections and the reference to refer to the updated version. The Permittee must use an off-site analytical laboratory capable of meeting the requirements of *QSM*, Version 3. Refer also to Comment 3.	Concur. Section 6.4.2 (Offsite Laboratory Analytical Methods) has been revised to include the most recent version of the Department of Defense, January 2006, *Quality Systems Manual for Environmental Laboratories*, Version 3. New Reference added to Section 11: United States Department of Defense. January 2006. *Quality Systems Manual for Environmental Laboratories*, Version 3. Furthermore, the selected offsite laboratory (TestAmerica Laboratories) is NELAP certified and can meet the requirements of QSM, Version 3. The "Self Declaration" statement for the TAL-DEN facility is included in the QAPP Addendum (Appendix A).

Response to Comments Final Triad Approach Dynamic Work Plan RCRA Facility Investigation SWMU 183 Basewide Sewer System Holloman Air Force Base, New Mexico, February, 2008				
Comment No.	**Section**	**Page**	**Comment**	**Response**
39	6.3.2.1.4	6-23 through 6-24	**Section 6.3.2.1.4, pages 6-23 through 6-24, all** The section describes the analysis of soil and groundwater to determine nitrate concentrations using IC via USEPA Method 300. To aid in determining potential matrix interferences for other analytes (e.g, PAH by immunoassay), the Permittee must include chloride and sulfate analyses by ion chromatography via USEPA Method 300.0, (*Determination of Inorganic Anions by Ion Chromatography*, Revision 2.1, 1993) to the list of analytes and revise this section and the appropriate tables accordingly. Refer also to Comment 10.	Action Deferred. Due to the abandonment of the Triad Dynamic Approach, the previous Section 6.3.2 (Onsite Laboratory Program) has been deleted from the SWMU 183 Work Plan.
40	6.3.2.1.5, 6.1.3.1.3, 6.1.3.2.2, Table C-1 of Appendix C	6-24, 6-4, 6-5, Table C-1 of Appendix C	**Section 6.3.2.1.5, page 6-24, all; Section 6.1.3.1.3, page 6-4, all; Section 6.1.3.2.2, page 6-5, all; and Table C-1 of Appendix C** In its discussion of on-site radionuclide field screening, the Work Plan does not describe or refer to any quality control parameters. Furthermore, the Work Plan does not discuss detection limits, except to say in Section 6.3.2.1.5 that "[t]he field-based radioactive survey is not intended to detect levels of radioactive material at or below the ARARs." The Permittee must revise all pertinent sections of the Work Plan to include a discussion of QC parameters and detection limits for radionuclides. Refer also to Comment 10.	Action Deferred. Previous Section 6.3.2 (Onsite Laboratory Program) has been removed from the SWMU 183 Work Plan due to the abandonment of the Triad Approach, which included onsite laboratory analysis.
41	6.3.2.3, Table 6-1, Table 6-2	6-24	**Section 6.3.2.3, page 6-24, 1st paragraph, all and Tables 6-1 and 6-2** The paragraph states, "[r]equirements for sample container types, holding times, and preservation chemicals are included in Table 6-1 of this Work Plan." Table 6-2 contains the listed information. The Permittee must revise the section to refer to Table 6-2 because Table 6-1 does not list this information.	Action Deferred. As previously discussed, previous Section 6.3.2 (Onsite Analytical Program) has been removed from the revised SWMU 183 Work Plan. Additionally, Table 6-2 has been replaced with Table 6-5 (Sample Containers and Holding Times by Sample Media) and contains the required information.
42	6.3.3 and 6.1.3	6-26, 6-3 through 6-7	**Section 6.3.3, page 6-26, last paragraph with two bullet points and Section 6.1.3, pages 6-3 through 6-7, all** The Work Plan provides the target levels for four specific analytes in Section 6.3.3, which discusses Offsite Analytical Methods, rather than in the sections discussing the target levels or ARARs (Section 6.1.3). According to Section 6.3.3, the proposed laboratory cannot meet the listed target levels, as shown in the following excerpt: ○ **Section 6.3.3, page 6-26, last paragraph, with two bullet points:** "As noted previously, for several compounds, MDLs will be used to meet the respective ARARs. Where concentrations fall between the PQLs and the MDLs, the data will be qualified accordingly. Exceptions to meeting the ARARs include: Benzo(a)pyrene and pentochlorophenol which have federal MCLs of 0.2 ug/L and 1.0 ug/L, respectively. TAL-DEN MDLs for these compounds are 0.74 ug/L and 20 ug/L, respectively and;" ○ "Radium-226 and radium-226 [*sic*] which both have ARAR values of 0.016 pCi/g (see Table C-1 in Appendix C of this Work Plan). GEL's MDLs for these isotopes are 1.0 pCi/g and 3.0 pCi/g, respectively. According to GEL, these isotopes are typically present in background soils at values well above the 0.016 pCi/g values, therefore, the ARAR values for these isotopes may prove to be non-applicable to the DQOs [data quality objectives] for this project."	Do not concur. Benzo(a)pyrene and pentachlorophenol have not been identified as contaminants of potential concern and have not been historically detected at oil/water separators associated with SWMU 183, therefore separate analysis for these constituents will not be conducted. Additionally, the TestAmerica reporting limits (RLs) for Radium-226 and Radium-228 are below the inhalation of fugitive dust ARAR (Table A.1, USEPA, 2000, see Section 6.2.1.1). Therefore, the 2nd bullet (referenced in comment 42) has been deleted from the Work Plan.

Response to Comments Final Triad Approach Dynamic Work Plan RCRA Facility Investigation SWMU 183 Basewide Sewer System Holloman Air Force Base, New Mexico, February, 2008				
Comment No.	**Section**	**Page**	**Comment**	**Response**
			The Permittee must obtain new, lower reporting limits from the laboratory or contract with a laboratory that can provide lower reporting limits. The Permittee must revise the first sentence of the second bullet to remove the repetitive radium-226 and replace it with radium-228. The Permittee must add the new reporting limits to Appendix A. Refer also to Comment 10.	
43	Table 3-1	Table 3-1	**Table 3-1** The table contains numerous problems: • Undefined abbreviations (e.g., LS, PS, OWS, ?, ft) • Cells with and without shading • Six columns containing no data, except the column title. Columns include "Actual Upgradient Manhole ID," "Actual Downgradient Manhole ID," "Initial Siting Latitude," "Initial Siting Longitude," "Actual Latitude," and "Actual Longitude" • Undefined empty cells, such as those scattered throughout the "Segment Sequence #" column • Truncated entries in the "Sampling Location Rationale" column • The word "Totals" at the end of the table does not appear to be associated with anything • The only listed definition states, "Bold boxes indicate unique lattice segments or long lengths without manholes." The term "lattice segment" does not appear anywhere else in the Work Plan. • Absence of page numbers • Bold boxes encircling only four columns, seeming to exclude the other data in the row The Permittee must modify the table as follows: • Include definitions for all abbreviations and shading; • Remove the columns with empty cells; • Define the empty cells in the "Segment Sequence #" column and/or fill the cell with a phrase, (e.g., "no data"); • Resize the cells such that none of the information appears truncated; • Make an appropriate use of the word "Totals" at the end of the table via definition, providing a total number of unspecific totals, or delete it; • Define the terminology "lattice segment" and use it where appropriate in the Work Plan, or remove it and use terminology consistent with the Work Plan; • Number the pages; and • Extend the bold boxes across all columns or define the reason they encircle only four columns. Refer also to Comment 6.	Concur. Table 3-1 has been revised as follows: 1.) Definitions for all abbreviations have been added and shading has been eliminated. 2.) Columns with empty cells have been removed. 3.) Undefined empty cells have been deleted. 4.) Cells have been resized such that none of the data appears truncated. 5.) "Totals" row at the end of the table will be deleted. 6.) "Lattice segment" terminology has been deleted, and terminology consistent with the Work Plan will be used instead. 7.) All pages have been numbered. 8.) Bold boxes have been removed from the table.
44	Tables 3-2, 3-3, 8-2	Tables 3-2, 3-3, 8-2	**Tables 3-2, 3-3, and 8-2** The tables contain undefined empty cells. Table 3-2 does not indicate the meaning of the dash (-). The Permittee must revise the tables to include definitions, and include a definition or explanation for the empty cells. Refer also to Comments 42 and 44.	Concur. Tables 3-2 and 3-3 have been revised. Table 8-2 (Summary of Anticipated Triad Team Decision Making) is no longer applicable and has been deleted from the Work Plan.

Response to Comments Final Triad Approach Dynamic Work Plan RCRA Facility Investigation SWMU 183 Basewide Sewer System Holloman Air Force Base, New Mexico, February, 2008				
Comment No.	**Section**	**Page**	**Comment**	**Response**
45	Table 5-1	Table 5-1	**Table 5-1** The Permittee must update the table to include all criteria as described in Comment 5. Table 5-1 contains a number of discrepancies, which include: • Table 5-1 lists the question, "Is measurable non-aqueous phase liquid (NAPL) present?" However, NAPL does not appear anywhere else in the Work Plan. The Permittee must include discussion of NAPLs within the conceptual model of the Work Plan, as well as the groundwater sampling portion (as appropriate). • According to Table 5-1, "TDS samples [will be collected] wherever groundwater is sampled," yet, the remainder of the Work Plan does not reflect this strategy. The Permittee must modify all appropriate sections to include TDS analyses for groundwater in all Stages. Refer also to Comment 10. • The Permittee must modify the table to include references to documents. • The Permittee must revise Table 5-1 to eliminate the duplicate numbering in the "Release Information" part of the table. • The Work Plan text does not discuss OT32 Primate Research Institute as a "Confirmed Release Location;" consequently, its appearance within Table 5-1 as the sole "Confirmed Release Location" is unexpected. The Permittee must provide an explanation for this designation. • Table 5-1 instructs to "analyze for indicator Pollutants of Concern (POCs) in near real-time in every sample and extended list in 10% of samples." However, the Work Plan indicates that when concentrations are measured above target levels, 100% of soil and groundwater samples will proceed for off-site laboratory analyses. Moreover, when concentrations are measured below target levels, 10% of soil and groundwater samples will proceed for off-site laboratory analyses. The Permittee must revise Table 5-1 to correct these discrepancies.	Action Deferred. Table 5-1 has been deleted and the text for Section 5 (Initial Conceptual Site Model) has been revised.
46	Tables 6-1, 6-2, 6-3, 7-1	Tables 6-1, 6-2, 6-3, 7-1	**Tables 6-1, 6-2, 6-3, and 7-1** These tables contain lists of analytes. The Permittee must revise these tables to reflect the updated analyte list (e.g, TAL metals) and define all acronyms. Refer to Comments 10, 23, 29, 30, and 41.	Concur. Due to the restructure format of the SWMU RFI Work Plan, many of the original tables have been deleted and/or extensively revised (e.g., former Tables 6-1, 6-3, and 7-1 have been deleted and the information that was presented in Table 6-2 is now included in Table 6-5). Furthermore, Tables 6-1 through 6-4 now present the Soil Sampling and Analysis for Sub-Basins 1-10 and Tables 6-6 through 6-9 present the Groundwater Sampling and Analysis for Sub-Basins 1-10 that will be performed by the offsite laboratory.
47	Appendix C, Table C-1	Appendix C, Table C-1	**Appendix C, Table C-1** Many footnotes on pages 13 through 15 are irrelevant and extraneous to Table C-1 because they are not used within the table. The NMED requires use of the USEPA Region 6 criteria, as New Mexico is in USEPA Region 6. To maintain consistency with other HAFB documents, the NMED requests that the work plan include USEPA Region 6 criteria, rather than USEPA Region 9 and Region 4 criteria. Refer also to Comments 10, 28, 31, 40, and 41.	Action Deferred. As discussed in the response to comment 28, Appendix C (ARARs) presented in the *Final Triad Approach Dynamic Work Plan SWMU 183-Basewide Sewer System, HAFB, NM* (Stone Environmental, Feb 2008) has been deleted from the Work Plan. The ARAR evaluation criteria and RLs are presented in Table 4-2 (Summary of Laboratory QC Limits) in the QAPP Addendum in Appendix A of the Work Plan.

APPENDIX A

HAFB BASEWIDE QUALITY ASSURANCE PROJECT PLAN (QAPP) ADDENDUM

QUALITY ASSURANCE PROJECT PLAN ADDENDUM

RCRA FACILITY INVESTIGATION
SWMU 183 - BASEWIDE SEWER SYSTEM
HOLLOMAN AIR FORCE BASE, NEW MEXICO

Prepared for:

49 CES/CEA
Holloman Air Force Base
New Mexico

Under Contract To:

U.S. Army Corps of Engineers
Albuquerque District
HTRW Branch
4101 Jefferson Plaza NE
Albuquerque, New Mexico 87109-3435

Prepared by:

NationView, LLC
1608 13th Avenue South, Suite 160
Birmingham, Alabama 35205
NationView Project No. 8080014.01.15

Contract No. W912PL-07-D-0050
Delivery Order No. DM01

August 2009

This page intentionally left blank.

QUALITY ASSURANCE PROJECT PLAN ADDENDUM

RCRA FACILITY INVESTIGATION
SWMU 183 - BASEWIDE SEWER SYSTEM
HOLLOMAN AIR FORCE BASE, NEW MEXICO

REVIEW SHEET

COMMITMENT TO IMPLEMENT THIS QUALITY ASSURANCE PROJECT PLAN ADDENDUM		
David D. Martin	David D. Martin	8-19-09
Corporate Sponsor	Signature	Date
Frank Gardner, P.G.	Frank Gardner	August 19, 2009
Program Manager	Signature	Date
Jim Moore, P.G.	J H Moore	August 19, 2009
Project Manager	Signature	Date
Marcia Olive	Marcia Olive	August 19, 2009
Project Chemist	Signature	Date

This page intentionally left blank.

QUALITY ASSURANCE PROJECT PLAN ADDENDUM

RCRA FACILITY INVESTIGATION
SWMU 183 - BASEWIDE SEWER SYSTEM
HOLLOMAN AIR FORCE BASE, NEW MEXICO

TABLE OF CONTENTS

List of Acronyms.....iii

Preface v

1 Introduction 1-1

2 Project Laboratory 2-1

3 Data Categories.....3-1

4 Data Quality Assurance and Quality Control 4-1

5 References 5-1

Attachments

Attachment A TestAmerica Laboratories Inc., Self-Declaration Form (May 2008)

Tables

3-1 Summary of Screening Data
3-2 Summary of Definitive Data
4-1 Summary of RFI Field QC Samples
4-2 Summary of Laboratory QC Limits

This page intentionally left blank.

LIST OF ACRONYMS

AFB	Air Force Base
ASTM	American Society for Testing and Materials
Bhate	Bhate Environmental Associates, Inc.
DQO	Data Quality Objective
DRO	Diesel Range Organics
EDD	Electronic data deliverable
GRO	Gasoline Range Organics
HAFB	Holloman Air Force Base
LCL	Lower Control Limit
LCS	Laboratory Control Sample
MCL	Maximum Contaminant Level
mg/kg	Milligrams per kilogram
mg/L	Milligrams per liter
MS	Matrix Spike
MSD	Matrix Spike Duplicate
NELAC	National Environmental Laboratory Accreditation Conference
NFA	No Further Action
NMED	New Mexico Environment Department
NMWQCC	New Mexico Water Quality Control Commission
ORO	Oil Range Organics
P.G.	Professional Geologist
QA	Quality Assurance
QAM	Quality Assurance Manual
QAPP	Quality Assurance Project Plan
QC	Quality Control
RCRA	Resource Conservation and Recovery Act
RFI	RCRA Facility Investigation
RL	Reporting Limit
RPD	Relative Percent Difference
SOPs	Standard Operating Procedures
SSLs	Soil Screening Levels
SVOC	Semi-volatile Organic Compounds
SWMU	Solid Waste Management Unit
TAL	Target Analyte List
TAL-DEN	TestAmerica Laboratories of Denver, Colorado
TAL-STL	TestAmerica Laboratories of St. Louis, Missouri
TDS	Total Dissolved Solids
TPH	Total Petroleum Hydrocarbons
UCL	Upper Control Limit
µg/kg	Micrograms per kilogram
µg/L	Micrograms per liter
USACE	United States Army Corps of Engineers

LIST OF ACRONYMS (CONTINUED)

USEPA	United States Environmental Protection Agency
VOC	Volatile Organic Compound

PREFACE

This Quality Assurance Project Plan (QAPP) Addendum has been developed to assure that sample collection, analyses, and evaluations are legally and scientifically defensible for the Resource Conservation and Recovery Act (RCRA) Facility Investigation (RFI) along the Basewide Sewer System (Solid Waste Management Unit [SWMU] - 183), Holloman Air Force Base (HAFB), New Mexico.

This document is an addendum to the *Basewide Quality Assurance Project Plan, Holloman Air Force Base, New Mexico* (Bhate Environmental Associates, Inc. [Bhate], November 2003) (Basewide QAPP) and must be used in conjunction with that document. This document contains the site specific information for the work at SWMU-183, outlined in the *Final RCRA Facility Investigation Work Plan, SWMU 183 - Basewide Sewer System, Holloman Air Force Base, New Mexico* (NationView, August 2009).

This page intentionally left blank.

1 INTRODUCTION

NationView, LLC, has been retained by the U.S. Army Corps of Engineers (USACE), under contract W912PL-07-D-0050, Delivery Order No. DM01 to conduct a Resource Conservation and Recovery Act (RCRA) Facility Investigation (RFI) at Solid Waste Management Unit (SWMU) 183, the Basewide Sewer System on Holloman Air Force Base (HAFB), New Mexico.

The primary project objectives of the SWMU 183 RFI are to:

1. Identify locations where releases to the environment from the sewer system have occurred,

2. Characterize the nature and extent of contaminants of concern in identified releases to soil and/or groundwater,

3. Collect sufficient analytical data to complete a site-specific risk assessment to determine the affect of releases on human health and/or the environment, and

4. Collect the proper data to meet the data quality objectives (DQOs) to support a No Further Action Status (NFA) under NFA Criteria 5 and obtain a Class III permit modification to remove this site from Table A of the HAFB Hazardous Waste Facility Permit No. NM6572124422.

See the Basewide Quality Assurance Project Plan (QAPP) (Bhate Environmental Associates, Inc. [Bhate], 2003) and the SWMU 183 - Basewide Sewer System RFI Work Plan (NationView, August 2009) for additional background information on HAFB and the SWMU 183 site.

This page intentionally left blank.

2 PROJECT LABORATORIES

The analytical work for this project will be preformed by either TestAmerica Laboratories Inc., of Denver, Colorado (TAL-DEN) or TestAmerica Laboratories Inc., of St. Louis, Missouri (TAL-STL) (Radionuclide samples only).

TAL-DEN
4955 Yarrow Street
Arvada, CO 80002
Phone: (303) 736-0100
Fax: (303) 431-7171

TAL-STL
13715 Rider Trail North
Earth City, MO 63045
Phone: (314) 298-8566
Fax: (314) 298-8757

The laboratory personnel who will be involved with this project include:

Mr. Mike Phillips, TestAmerica Project Manager

TestAmerica Laboratories Inc. are certified by the National Environmental Laboratory Accreditation Conference (NELAC) and validated by USACE (see Attachment A of this QAPP Addendum) and have extensive previous experience in working on USACE projects. The TestAmerica Laboratories Quality Assurance Manual (QAM) and Standard Operating Procedures (SOPs) have been reviewed by NationView and found to meet all the requirements for this project. The QAM and SOPs are available for further review if required.

This page intentionally left blank.

3 DATA CATEGORIES

The data use determines the required levels of data quality. The two levels of data quality established by the USACE are screening and definitive. Under this QAPP Addendum, the data to be generated under each level in this investigation are presented in Table 3-1 (Screening) and Table 3-2 (Definitive). The screening data will be generated in the field using field instruments. The definitive data generated by the laboratory will be presented with limited data deliverables (i.e. Level II data packages), using a standard turn-around-time for soil and groundwater samples collected during the investigation. All definitive data produced by the laboratory will also be presented in an electronic data deliverable (EDD) format.

This page intentionally left blank.

4 DATA QUALITY ASSURANCE AND QUALITY CONTROL

The general data quality assurance (QA) and quality control (QC) requirements for HAFB are presented in the Basewide QAPP. The field QC requirements for this project are presented in Table 4-1. The project specific laboratory QC limits are listed in Table 4-2.

All final definitive data will be reviewed and validated by a NationView Senior Chemist based on the logic and guidelines of the United States Environmental Protection Agency (USEPA) National Functional Guidelines for Data Validation and the site specific laboratory QC limits presented in this QAPP Addendum.

This page intentionally left blank.

5 REFERENCES

Bhate, November 2003. *Basewide Quality Assurance Project Plan, Holloman Air Force Base, New Mexico.*

NationView, August 2009. *Final RCRA Facility Investigation Work Plan, SWMU 183 – Basewide Sewer System, Holloman Air Force Base, New Mexico.*

United States Environmental Protection Agency, June 2008. *USEPA Contract Laboratory Program National Functional Guidelines for Superfund Organic Methods Data Review*.

United States Environmental Protection Agency, October 2004. *USEPA Contract Laboratory Program National Functional Guidelines for Inorganic Data Review*.

This page intentionally left blank.

TABLES

Table 3-1
Summary of Screening Data

Parameter	Matrix	Testing Method
Volatile Organic Compounds (VOCs)	Soil	Organic Vapor Analyzer
Noticeable odors	Soil	Olfactory sense
Noticeable odors	Groundwater	Olfactory sense

Table 3-2
Summary of Definitive Data

Parameter	Matrix	Preparation Method	Analytical Method
Volatile Organic Compounds (VOCs)	Soil	USEPA SW846 Method 5035	USEPA SW846 Method 8260B
Semi-volatile Organic Compounds (SVOCs)	Soil	USEPA SW846 Method 3550B	USEPA SW846 Method 8270C
Total Petroleum Hydrocarbons (TPH)	Soil	USEPA SW846 Method 3550B	USEPA SW846 Method 8015B
PCBs	Soil	USEPA SW846 Method 3550	USEPA SW846 Method 8082
TAL Metals	Soil	USEPA SW846 Method 3050B	USEPA SW846 Methods 6010B/7471A
Nitrate	Soil	USEPA MCAWW Method 353.2	USEPA MCAWW Method 353.2
Sulfate	Soil	USEPA SW846 Method 9056	USEPA SW846 Method 9056
Chloride	Soil	USEPA SW846 Method 9056	USEPA SW846 Method 9056
Pesticides	Soil	USEPA SW846 Method 3550B	USEPA SW846 Method 8081A
Herbicides	Soil	USEPA SW846 Method 8151A	USEPA SW846 Method 8151A
Perchlorate	Soil	USEPA SW846 Method 6860	USEPA SW846 Method 6860
Carbon-14	Soil	NA	EERF Method C-01-1
Tritium	Soil	NA	USEPA Method 906.0
Radium 226	Soil	USEPA Method 903.0	USEPA Method 903.0 MOD
Radium 228	Soil	NA	USEPA SW846 Method 9320
Moisture Content	Soil	USEPA MCAWW Method 160.3	USEPA MCAWW Method 160.3
VOCs	Groundwater	USEPA SW846 Method 5030B	USEPA SW846 Method 8260B
SVOCs	Groundwater	USEPA SW846 Method 3520C	USEPA SW846 Method 8270C
TPH	Groundwater	USEPA SW846 Method 3510C	USEPA SW846 Method 8015B
PCBs	Groundwater	USEPA SW846 Method 3510C	USEPA SW846 Method 8082
TAL Metals	Groundwater	USEPA SW846 Method 3010A	USEPA SW846 Methods 6010B/7470A
Nitrate	Groundwater	USEPA MCAWW Method 353.2	USEPA MCAWW Method 353.2
Sulfate	Groundwater	USEPA SW846 Method 9056	USEPA SW846 Method 9056
Chloride	Groundwater	USEPA SM19 Method 4500CL C	USEPA SM19 Method 4500CL C
Pesticides	Groundwater	USEPA SW846 Method 3510C	USEPA SW846 Method 8081A
Herbicides	Groundwater	USEPA SW846 Method 8151A	USEPA SW846 Method 8151A
Perchlorate	Groundwater	USEPA SW846 Method 6860	USEPA SW846 Method 6860
Carbon-14	Groundwater	NA	EERF Method C-01-1
Tritium	Groundwater	NA	USEPA Method 906.0
Radium 226	Groundwater	USEPA Method 903.0	USEPA Method 903.0 MOD
Radium 228	Groundwater	USEPA Method 904	USEPA Method 904 MOD
Total Dissolved Solids (TDS)	Groundwater	USEPA SM18 Method 2540C	USEPA SM18 Method 2540C

Notes:
USEPA = United States Environmental Protection Agency
PCB = Polychlorinated Biphenyls
TAL = Target Analyte List
SW = Office of Solid Waste
SM = Standard Method
EERF = Eastern Environmental Radiation Facility
MCAWW = Methods for Chemical Analysis of Water and Wastes
MOD = Modified
NA = Not Applicable

Table 4-1
Summary of RFI Field QC Samples

Matrix	Analysis	Number of Field Samples [1]	Equipment Blanks [2]	Trip Blanks [3]	Field Duplicates [4]	MS [5]	MSD [6]	Total
Soil	VOCs per USEPA SW846 Method 8260B	52	0	25	7	5	5	94
	SVOCs per USEPA SW846 Method 8270C	52	0	0	7	5	5	69
	PCBs per USEPA SW846 Method 8082	52	0	0	7	5	5	69
	TPHs per USEPA SW846 Method 8015B	52	0	0	7	5	5	69
	TAL Metals by USEPA SW846 Methods 6010B/7471A	52	0	0	7	5	5	69
	Pesticides per USEPA SW846 Method 8081A	10	0	0	1	1	1	13
	Herbicides per USEPA SW846 Method 8151A	10	0	0	1	1	1	13
	Perchlorate per USEPA SW846 Method 6860	6	0	0	1	1	1	9
	Carbon-14 per EERF Method C-01-1	10	0	0	1	1	1	13
	Tritium per USEPA Method 906.0	10	0	0	1	1	1	13
	Radium 226 per USEPA Method 903.0 MOD	10	0	0	1	1	1	13
	Radium 228 per USEPA SW846 Method 9320	10	0	0	1	1	1	13
	Nitrate per USEPA MCAWW Method 353.2	52	0	0	7	5	5	69
	Sulfate per USEPA SW846 Method 9056	52	0	0	7	5	5	69
	Chloride per USEPA SW846 Method 9056	52	0	0	7	5	5	69
	Moisture Content per USEPA MCAWW Method 160.3M	52	0	0	7	5	5	69
Groundwater	VOCs per USEPA SW846 Method 8260B	TBD	TBD	TBD	TBD	TBD	TBD	TBD
	SVOCs per USEPA SW846 Method 8270C	TBD	TBD	0	TBD	TBD	TBD	TBD
	PCBs per USEPA SW846 Method 8082	TBD	TBD	0	TBD	TBD	TBD	TBD
	TPHs per USEPA SW846 Method 8015B	TBD	TBD	0	TBD	TBD	TBD	TBD
	TAL Metals by USEPA SW846 Methods 6010B/7470A	TBD	TBD	0	TBD	TBD	TBD	TBD
	Pesticides per USEPA SW846 Method 8081A	TBD	TBD	0	TBD	TBD	TBD	TBD
	Herbicides per USEPA SW846 Method 8151A	TBD	TBD	0	TBD	TBD	TBD	TBD
	Perchlorate per USEPA SW846 Method 6860	TBD	TBD	0	TBD	TBD	TBD	TBD
	Carbon-14 per EERF Method C-01-1	TBD	TBD	0	TBD	TBD	TBD	TBD
	Tritium per USEPA Method 906.0	TBD	TBD	0	TBD	TBD	TBD	TBD
	Radium 226 per USEPA Method 903.0 MOD	TBD	TBD	0	TBD	TBD	TBD	TBD
	Radium 228 per USEPA Method 904 MOD	TBD	TBD	0	TBD	TBD	TBD	TBD
	Nitrate per USEPA MCAWW Method 353.2	TBD	TBD	0	TBD	TBD	TBD	TBD
	Sulfate per USEPA SW846 Method 9056	TBD	TBD	0	TBD	TBD	TBD	TBD
	Chloride by USEPA SM19 Method 4500CL C	TBD	TBD	0	TBD	TBD	TBD	TBD
	Total Dissolved Solids by USEPA SM18 Method 2540C	TBD	TBD	0	TBD	TBD	TBD	TBD

Notes:

USEPA = United States Environmental Protection Agency
VOCs = Volatile Organic Compounds
SVOCs = Semi-volatile Organic Compounds
TAL = Target Analyte List
TPH = Total Petroleum Hydrocarbons
PCB = Polychlorinated Biphenyls
SW = USEPA Office of Solid Waste
SM = Standard Method
MS = Matrix Spike
MSD = Matrix Spike Duplicate
MCAWW = Methods for Chemical Analysis of Water and Wastes
EERF = Eastern Environmental Radiation Facility
TBD = To Be Determined
ARAR = Applicable or Relevant and Appropriate Requirements

[1] Groundwater samples to be collected will be determined by Phase I ARAR soil exceedences (maximum number of primary samples = 52)
[2] Equipment blank samples will be collected at a minimum frequency of one per media sampled per day (Hollow Stem Auger drilling only)
[3] Estimated, one trip blank will accompany every shipment of VOC samples
[4] Duplicate samples will be collected at a minimum frequency of one for every 10pPrimary samples collected
[5] MS samples will be collected at a minimum frequency of one for every 20 primary samples collected
[6] MSD samples will be collected at a minimum frequency of one for every 20 primary samples collected

Table 4-2
Summary of Laboratory QC Limits

Parameter	CAS No.	RL / Evaluation Criteria					LCS				Matrix Spike Water			Matrix Spike Soil		
		Water			Soil		Water		Soil		MS Recovery		MSD	MS Recovery		MSD
		RL	NMWQCC[1]	USEPA MCL	RL	SSL[2]	LCL	UCL	LCL	UCL	LCL	UCL	RPD	LCL	UCL	RPD
VOCs per USEPA SW846 Method 8260B		µg/L	µg/L	µg/L	µg/kg	mg/kg	%	%	%	%	%	%	%	%	%	%
Acetone	67-64-1	25	NV	NV	50	67,500	59	134	61	144	59	134	14	61	144	29
Benzene	71-43-2	1	10	5	5	15.5	83	124	78	130	83	124	11	78	130	25
Bromodichloromethane	75-27-4	1	NV	NV	5	5.25	76	116	73	122	76	116	10	73	122	25
Bromoform (Tribromomethane)	75-25-2	1	NV	NV	5	496	68	128	70	139	68	128	11	70	139	26
Bromomethane (Methyl bromide)	74-83-9	2	NV	NV	5	22.3	55	151	60	146	55	151	21	60	146	31
2-Butanone (Methyl ethyl ketone)	78-93-3	5	NV	NV	25	39,600	61	127	66	134	61	127	13	66	134	23
Carbon tetrachloride	56-23-5	1	10	5	5	4.38	74	139	79	135	74	139	13	79	135	29
Chlorobenzene	108-90-7	1	NV	100	5	508	87	115	83	122	87	115	9	83	122	23
Chloroethane (Ethyl Chloride)	75-00-3	2	NV	NV	5	43,600	54	166	61	153	54	166	20	61	153	31
Chloroform	67-66-3	1	100	NV	5	5.72	85	123	79	129	85	123	10	79	129	27
Chloromethane (Methyl chloride)	74-87-3	2	NV	NV	5	35.6	55	173	58	163	55	173	22	58	163	26
Dibromomethane (Methylene bromide)	74-95-3	2	NV	NV	5	782	81	116	75	128	81	116	10	75	128	26
1,2-Dibromoethane (EDB)	106-93-4	1	0.1	0.05	5	0.547	80	115	77	126	80	115	10	77	126	24
1,2-Dichlorobenzene (o-Dichlorobenzene)	95-50-1	1	NV	600	5	3,010	85	115	83	123	85	115	9	83	123	28
1,3-Dichlorobenzene (m-Dichlorobenzene)	541-73-1	1	NV	NV	5	NV [3]	86	115	82	126	86	115	9	82	126	29
1,4-Dichlorobenzene (p-Dichlorobenzene)	106-46-7	1	NV	75	5	32.1	87	113	84	124	87	113	10	84	124	28
Dichlorodifluoromethane	75-71-8	2	NV	NV	5	481	34	158	35	162	34	158	22	35	162	30
1,1-Dichloroethane	75-34-3	1	25	NV	5	62.9	82	127	77	132	82	127	10	77	132	26
1,2-Dichloroethane	107-06-2	1	10	5	5	7.74	76	122	78	129	76	122	11	78	129	24
1,1-Dichloroethene (1,1-Dichloroethylene)	75-35-4	1	5	7	5	618	75	133	66	132	75	133	13	66	132	27
1,2-Dichloroethene (total)	540-59-0	1	NV	NV	5	700 [4]	78	118	80	120	78	118	20	80	120	20
cis-1,2-Dichloroethene	156-59-2	1	NV	70	5	782	81	114	74	123	81	114	10	74	123	26
trans-1,2-Dichloroethene	156-60-5	1	NV	100	5	273	82	126	77	129	82	126	10	77	129	27
1,2-Dichloropropane	78-87-5	1	NV	5	5	14.7	81	120	74	127	81	120	11	74	127	27
cis-1,3-Dichloropropene	10061-01-5	1	NV	NV	5	NV [3]	83	119	79	130	83	119	10	79	130	23
trans-1,3-Dichloropropene	10061-02-6	1	NV	NV	5	NV [3]	87	123	87	131	87	123	10	87	131	27
Ethylbenzene	100-41-4	1	750	700	5	69.6	87	118	82	124	87	118	10	82	124	25
2-Hexanone	591-78-6	5	NV	NV	25	NV [3]	58	125	67	130	58	125	14	67	130	29
Methylene chloride	75-09-2	5	100	5	10	199	69	125	62	140	69	125	11	62	140	25
4-Methyl-2-pentanone (Methyl Isobutyl Ketone)	108-10-1	5	NV	NV	25	5,300 [4]	62	125	69	125	62	125	13	69	125	24
Styrene	100-42-5	1	NV	100	5	8,970	78	118	79	123	78	118	11	79	123	28
1,1,1,2-Tetrachloroethane	630-20-6	1	NV	NV	5	29.2	81	119	81	121	81	119	10	81	121	25
1,1,2,2-Tetrachloroethane	79-34-5	1	10	NV	5	7.97	71	120	70	128	71	120	11	70	128	30
Tetrachloroethene	127-18-4	1	20	5	5	6.99	80	131	79	132	80	131	12	79	132	27
Toluene	108-88-3	1	750	1,000	5	5,570	86	116	80	123	86	116	10	80	123	26
1,2,4-Trichlorobenzene	120-82-1	1	NV	70	5	143	68	123	82	137	68	123	11	82	137	32
1,1,1-Trichloroethane	71-55-6	1	60	200	5	21,800	79	133	80	133	79	133	11	80	133	27
1,1,2-Trichloroethane	79-00-5	1	10	5	5	17.2	80	114	76	118	80	114	11	76	118	28
Trichloroethene	79-01-6	1	100	5	5	45.7	85	124	78	132	85	124	10	78	132	28
Trichlorofluoromethane	75-69-4	2	NV	NV	5	2,010	66	156	67	149	66	156	15	67	149	29
1,2,3-Trichloropropane	98-18-4	2	NV	NV	5	0.915	77	115	74	125	77	115	12	74	125	30
Vinyl chloride	75-01-4	1	1	2	5	0.865	57	153	60	145	57	153	22	60	145	29
Xylenes (total)	1330-20-7	2	620	10,000	5	1,090	77	117	70	130	77	117	20	70	130	25
n-Butylbenzene	104-51-8	1	NV	NV	5	NV [3]	84	124	80	138	84	124	10	80	138	31
sec-Butylbenzene	135-98-8	1	NV	NV	5	NV [3]	86	127	82	132	86	127	10	82	132	29
Isopropylbenzene (Cumene)	98-82-8	1	NV	NV	5	3,210	87	131	82	133	87	131	10	82	133	27
1,2,4-Trimethylbenzene	95-63-6	2	NV	NV	5	67 [4]	82	120	77	129	82	120	10	77	129	29
1,3,5-Trimethylbenzene	108-67-8	2	NV	NV	5	47 [4]	83	123	79	129	83	123	10	79	129	31
n-Propylbenzene	103-65-1	1	NV	NV	5	NV [3]	86	125	78	129	86	125	10	78	129	29
tert-Butylbenzene	98-06-6	1	NV	NV	5	NV [3]	83	126	79	130	83	126	10	79	130	29
Dibromochloromethane	124-48-1	1	NV	NV	5	11.3	74	116	78	117	74	116	11	78	117	27
2-Chlorotoluene (o-Chlorotoluene)	95-49-8	1	NV	NV	5	1,560	84	121	77	123	84	121	10	77	123	31

Table 4-2
Summary of Laboratory QC Limits

Parameter	CAS No.	RL / Evaluation Criteria					LCS				Matrix Spike Water			Matrix Spike Soil		
		Water			Soil		Water		Soil		MS Recovery		MSD	MS Recovery		MSD
		RL	NMWQCC[1]	USEPA MCL	RL	SSL[2]	LCL	UCL	LCL	UCL	LCL	UCL	RPD	LCL	UCL	RPD
VOCs per USEPA SW846 Method 8260B		µg/L	µg/L	µg/L	µg/kg	mg/kg	%	%	%	%	%	%	%	%	%	%
4-Chlorotoluene (p-Chlorotoluene)	106-43-4	1	NV	NV	5	5,500 [4]	84	120	78	129	84	120	10	78	129	29
1,2-Dibromo-3-chloropropane (DBCP)	96-12-8	2	NV	0.2	5	0.194	61	118	67	129	61	118	15	67	129	29
1,3-Dichloropropane	142-28-9	1	NV	NV	5	1,600 [4]	81	113	78	118	81	113	11	78	118	26
2,2-Dichloropropane	594-20-7	1	NV	NV	5	NV [3]	77	138	80	137	77	138	12	80	137	28
1,1-Dichloropropene	563-58-6	1	NV	NV	5	NV [3]	87	127	81	133	87	127	10	81	133	26
Hexachlorobutadiene (Hexachloro-1,3-butadiene)	87-68-3	2	NV	NV	5	50.3	71	133	77	150	71	133	12	77	150	36
4-Isopropyltoluene (p-Isopropyltoluene)	99-87-6	1	NV	NV	5	NV [3]	83	125	82	132	83	125	9	82	132	29
Methyl Tert Butyl Ether (Tert-Butyl Methyl Ether)	1634-04-4	1	NV	NV	5	862	75	116	70	131	75	116	10	70	131	25
1,2,3-Trichlorobenzene	87-61-6	1	NV	NV	5	NV [3]	64	126	78	136	64	126	16	78	136	34
m,p-Xylene	108-38-8 / 106-42-3	2	620	10,000	10	8,290	86	121	82	128	86	121	10	82	128	25
o-Xylene	95-47-6	1	620	10,000	5	9,550	83	121	82	126	83	121	10	82	126	25
Bromobenzene	108-86-1	1	NV	NV	5	94 [4]	83	115	78	123	83	115	10	78	123	30
Bromochloromethane	74-97-5	1	NV	NV	5	NV [3]	78	112	72	122	78	112	10	72	122	23
Naphthalene	91-20-3	5	30	NV	5	45.0	59	125	59	143	59	125	15	59	125	31
Dibromofluoromethane (surr)	1868-53-7	--	--	--	--	--	87	116	80	121	--	--	--	--	--	--
Toluene-D8 (surr)	2037-26-5	--	--	--	--	--	86	112	71	130	--	--	--	--	--	--
4-Bromofluorobenzene (surr)	460-00-4	--	--	--	--	--	84	120	59	148	--	--	--	--	--	--
1,2-Dichloroethane-D4 (surr)	17060-07-0	--	--	--	--	--	76	127	77	123	--	--	--	--	--	--
SVOCs by USEPA SW846 Method 8270C		µg/L	µg/L	µg/L	µg/kg	mg/kg	%	%	%	%	%	%	%	%	%	%
Acenaphthene	83-32-9	5	NV	NV	170	3,440	58	106	59	97	58	106	21	59	97	29
Acenaphthylene	208-96-8	5	NV	NV	170	NV [3]	58	105	58	98	58	105	21	58	98	30
Acetophenone	98-86-2	10	NV	NV	330	7,820	--	--	--	--	--	--	--	--	--	--
Anthracene	120-12-7	5	NV	NV	170	17,200	65	108	61	104	65	108	19	61	104	29
Benzo(a)anthracene	56-55-3	5	NV	NV	170	4.81	63	111	60	106	63	111	19	60	106	31
Benzo(b)fluoranthene	205-99-2	5	NV	NV	170	4.81	63	109	60	107	63	109	20	60	107	31
Benzo(k)fluoranthene	207-08-9	5	NV	NV	170	48.1	64	111	61	107	64	111	20	61	107	30
Benzo(g,h,i)perylene	191-24-2	5	NV	NV	170	NV [3]	61	111	56	103	61	111	21	56	103	32
Benzo(a)pyrene	50-32-8	5	0.7	0.2	170	0.481	62	106	59	102	62	106	20	59	102	32
bis(2-Chloroethoxy)methane	111-91-1	5	NV	NV	170	180 [4]	48	101	51	89	48	101	28	51	89	30
bis(2-Chloroethyl)ether	111-44-4	5	NV	NV	170	2.56	51	108	50	96	51	108	27	50	96	33
4-Bromophenyl phenyl ether	101-55-3	5	NV	NV	170	NV [3]	64	107	60	104	64	107	20	60	104	26
Butyl benzyl phthalate	85-68-7	5	NV	NV	330	260 [4]	59	114	57	110	59	114	20	57	110	28
4-Chloroaniline (p-Chloroaniline)	106-47-8	10	NV	NV	330	2.4 [4]	53	103	19	85	53	103	22	19	85	34
4-Chloro-3-methyl phenol	59-50-7	5	NV	NV	170	NV [3]	53	105	59	102	53	105	24	59	102	27
Chrysene	218-01-9	5	NV	NV	170	481	64	111	60	107	64	111	19	60	107	31
Dibenzo(a,h)anthracene	53-70-3	5	NV	NV	170	0.481	62	112	57	105	62	112	20	57	105	29
Dibenzofuran	132-64-9	5	NV	NV	170	NV [3]	61	108	58	103	61	108	20	58	103	27
Di-n-butyl phthalate (Dibutyl phthalate)	84-74-2	5	NV	NV	330	6,110	62	109	59	105	62	109	20	59	105	27
3,3'-Dichlorobenzidine	91-94-1	10	NV	NV	330	8.71	57	105	34	88	57	105	25	34	88	31
2,4-Dichlorophenol	120-83-2	5	NV	NV	170	183	53	108	60	101	53	108	26	60	101	30
Diethyl phthalate	84-66-2	5	NV	NV	330	48,900	62	109	59	106	62	109	19	59	106	27
2,4-Dimethylphenol	105-67-9	5	NV	NV	170	1,220	37	91	49	89	37	91	28	49	89	31
Dimethyl phthalate	131-11-3	5	NV	NV	330	611,000	63	106	60	100	63	106	19	60	100	26
4,6-Dinitro-2-methylphenol (4,6-Dinitro-o-cresol)	534-52-1	10	NV	NV	330	6.11	62	115	58	109	62	115	26	58	109	37
2,4-Dinitrophenol	51-28-5	25	NV	NV	830	122	37	111	39	107	37	111	30	39	107	40
2,4-Dinitrotoluene	121-14-2	5	NV	NV	170	12.6	60	109	59	103	60	109	20	59	103	30
2,6-Dinitrotoluene	606-20-2	5	NV	NV	170	61.2	58	104	57	99	58	104	21	57	99	30
Di-n-octyl phthalate	117-84-0	5	NV	NV	330	NV [3]	60	120	59	117	60	120	24	59	117	28
Fluoranthene	206-44-0	5	NV	NV	170	2,290	65	114	60	110	65	114	21	60	110	32

Table 4-2
Summary of Laboratory QC Limits

Parameter	CAS No.	RL / Evaluation Criteria					LCS				Matrix Spike Water			Matrix Spike Soil		
		Water			Soil		Water		Soil		MS Recovery		MSD	MS Recovery		MSD
		RL	NMWQCC[1]	USEPA MCL	RL	SSL[2]	LCL	UCL	LCL	UCL	LCL	UCL	RPD	LCL	UCL	RPD
SVOCs by USEPA SW846 Method 8270C		µg/L	µg/L	µg/L	µg/kg	mg/kg	%	%	%	%	%	%	%	%	%	%
Fluorene	86-73-7	5	NV	NV	170	2,290	61	106	60	99	61	106	19	60	99	30
Hexachlorobenzene	118-74-1	5	NV	1	170	2.45	62	107	58	103	62	107	20	58	103	27
Hexachlorocyclopentadiene	77-47-4	5	NV	50	170	367	19	84	36	94	19	84	35	36	94	41
Hexachloroethane	76-72-1	5	NV	NV	170	61.1	35	101	44	89	35	101	29	44	89	38
Indeno(1,2,3-cd)pyrene	193-39-5	5	NV	NV	170	4.81	61	113	57	104	61	113	20	57	104	33
2-Methylnaphthalene	91-57-6	5	NV	NV	170	310 [4]	56	112	57	103	56	112	26	57	103	32
2-Methylphenol (Cresol, o-)	95-48-7	5	NV	NV	170	3,100 [4]	35	91	53	94	35	91	30	53	94	29
Naphthalene	91-20-3	5	NV	NV	170	45	50	104	54	93	50	104	28	54	93	32
2-Nitroaniline	88-74-4	10	NV	NV	330	180 [4]	60	109	53	106	60	109	20	53	106	29
3-Nitroaniline	99-09-2	10	NV	NV	330	NV [3]	52	107	29	85	52	107	21	29	85	31
4-Nitroaniline	100-01-6	10	NV	NV	330	24 [4]	59	111	49	104	59	111	21	49	104	31
Nitrobenzene	98-95-3	5	NV	NV	170	49.4	52	105	53	92	52	105	28	53	92	32
2-Nitrophenol	88-75-5	5	NV	NV	170	NV [3]	49	111	55	96	49	111	30	55	96	30
4-Nitrophenol	100-02-7	25	NV	NV	830	NV [3]	13	55	56	106	13	55	31	56	106	29
N-Nitrosodiphenylamine	86-30-6	5	NV	NV	170	800	57	110	53	107	57	110	19	53	107	28
N-Nitroso-di-n-propylamine	621-64-7	5	NV	NV	170	0.069 [4]	51	104	49	94	51	104	28	49	94	28
Pentachlorophenol	87-86-5	25	NV	1	830	20.7	57	118	50	115	57	118	26	50	115	33
Phenol	108-95-2	5	NV	NV	170	18,300	13	54	55	99	13	54	34	55	99	28
Pyrene	129-00-0	5	NV	NV	170	1,720	60	113	58	109	60	113	20	58	109	33
2,4,5-Trichlorophenol	95-95-4	5	NV	NV	170	6,110	59	106	60	101	59	106	23	60	101	28
2,4,6-Trichlorophenol	88-06-2	5	NV	NV	170	6.11	58	107	60	100	58	107	24	60	100	27
bis(2-Chloroisopropyl)ether	108-60-1	5	NV	NV	170	91.5	43	106	44	94	43	106	27	44	94	32
4-Methylphenol (cresol, p-)	104-44-5	5	NV	NV	170	310 [4]	32	85	54	95	32	85	29	54	95	31
Hexachlorobutadiene (Hexachloro-1,3-butadiene)	87-68-3	5	NV	NV	170	50.3	38	107	49	95	38	107	30	49	95	33
Caprolactum	105-60-2	10	NV	NV	330	31,000 [4]	48	120	49	120	48	120	30	49	120	30
Atrazine	1912-24-9	50	NV	NV	330	2.1 [4]	--	--	--	--	--	--	--	--	--	--
Carbazole	86-74-8	10	NV	NV	330	NV [3]	--	--	54	120	--	--	--	54	120	30
2-Fluorophenol (surr)	367-12-4	--	--	--	--	--	19	90	45	114	--	--	--	--	--	--
Phenol-d5 (surr)	4165-62-2	--	--	--	--	--	10	68	44	124	--	--	--	--	--	--
2,4,6-Tribromophenol (surr)	118-79-6	--	--	--	--	--	36	137	50	128	--	--	--	--	--	--
Nitrobenzene-d5 (surr)	4165-60-0	--	--	--	--	--	49	119	41	123	--	--	--	--	--	--
2-Fluorobiphenyl (surr)	321-60-8	--	--	--	--	--	45	118	46	122	--	--	--	--	--	--
Terphenyl-d14 (surr)	1718-51-0	--	--	--	--	--	46	135	45	135	--	--	--	--	--	--
TAL Metals by USEPA SW846 Methods 6010B/7470A/7471A		µg/L	µg/L	µg/L	mg/kg	mg/kg	%	%	%	%	%	%	%	%	%	%
Aluminum	7429-90-5	100	NV	NV	10	78,100	87	111	82	116	83	119	25	50	200	30
Antimony	7440-36-0	10	NV	6	1.5	31.3	88	108	82	102	81	124	25	20	200	30
Arsenic	7440-38-2	15	100	10	2	3.59	88	109	85	104	84	124	25	76	111	30
Barium	7440-39-3	10	1,000	2,000	1	15,600	92	112	87	112	85	120	25	52	159	30
Beryllium	7440-41-7	1	NV	4	0.5	156	89	113	84	114	79	121	25	72	105	30
Cadmium	7440-43-9	5	10	5	0.5	77.9	88	111	87	107	82	119	25	40	130	30
Calcium	7440-70-2	200	NV	NV	20	NV [3]	90	111	82	114	48	153	25	43	165	30
Chromium	7440-47-3	10	50	100	1.5	219	90	113	84	114	73	135	25	70	200	30
Cobalt	7440-48-4	10	50	NV	1	23 [4]	89	111	87	108	82	119	25	72	106	30
Copper	7440-50-8	15	1,000	1,300	2	3,130	86	112	88	109	82	129	25	37	187	30
Iron	7439-89-6	100	1,000	NV	15	54,800	89	116	87	124	52	155	25	70	200	30
Lead	7439-92-1	9	50	15	0.8	400	89	109	86	107	89	121	25	70	200	30
Magnesium	7439-95-4	200	NV	NV	20	NV [3]	92	113	90	110	62	146	25	64	145	30
Manganese	7439-96-5	10	200	NV	1	10,700	90	110	88	109	79	121	25	40	200	30
Mercury (Elemental)	7439-97-6	0.2	2	2	0.033	7.71	88	111	88	111	88	111	10	88	111	30
Nickel	7440-02-0	40	200	NV	4	1,560	89	111	87	108	84	120	25	61	126	30

Table 4-2
Summary of Laboratory QC Limits

Parameter	CAS No.	RL / Evaluation Criteria					LCS				Matrix Spike Water			Matrix Spike Soil		
		Water			Soil		Water		Soil		MS Recovery		MSD	MS Recovery		MSD
		RL	NMWQCC[1]	USEPA MCL	RL	SSL[2]	LCL	UCL	LCL	UCL	LCL	UCL	RPD	LCL	UCL	RPD
TAL Metals by USEPA SW846 Methods 6010B/7470A/7471A		µg/L	µg/L	µg/L	mg/kg	mg/kg	%	%	%	%	%	%	%	%	%	%
Potassium	7440-22-4	3,000	NV	NV	300	NV [3]	89	114	89	109	76	132	25	56	172	30
Selenium	7782-49-2	15	50	50	1.3	391	90	110	83	103	71	140	25	76	104	30
Silver	7440-22-4	10	50	NV	1	391	86	120	87	114	75	141	25	75	141	30
Sodium	7440-23-5	1,000	NV	NV	500	NV [3]	90	117	90	112	70	203	25	78	111	30
Thallium	7440-28-0	15	NV	2	1.20	5.16	88	108	84	106	90	116	25	78	101	30
Vanadium	7440-62-2	10	NV	NV	2	391	91	111	88	108	85	120	25	50	169	30
Zinc	7440-66-6	20	10,000	NV	3	23,500	84	111	76	114	60	137	25	70	200	30
PCBs by USEPA SW846 Method 8082		µg/L	µg/L	µg/L	µg/kg	mg/kg	%	%	%	%	%	%	%	%	%	%
Aroclor 1016	12674-11-2	1	1	0.5	10	3.93	61	125	71	118	53	130	30	71	118	36
Aroclor 1221	11104-28-2	1	1	0.5	10	1.42	--	--	--	--	--	--	--	--	--	--
Aroclor 1232	11141-16-5	1	1	0.5	10	1.42	--	--	--	--	--	--	--	--	--	--
Aroclor 1242	53469-21-9	1	1	0.5	10	1.7	--	--	--	--	--	--	--	--	--	--
Aroclor 1248	12672-29-6	1	1	0.5	10	1.7	--	--	--	--	--	--	--	--	--	--
Aroclor 1254	11097-69-1	1	1	0.5	10	1.12	--	--	--	--	--	--	--	--	--	--
Aroclor 1260	11096-82-5	1	1	0.5	10	1.7	63	129	65	123	58	150	30	65	123	36
TPH by USEPA SW846 Method 8015B		µg/L	µg/L	µg/L	µg/kg	mg/kg	%	%	%	%	%	%	%	%	%	%
TPH-Gasoline Range Organics (C6-C10)	--	0.25	NA[5]	NV	8.3	NA[5]	63	126	66	122	67	171	31	37	142	17
4-Bromofluorobenzene (surr)	460-00-4	--	--	--	--	--	62	135	62	135	--	--	--	--	--	--
aaa-Trifluorotoluene (surr)	98-08-8	--	--	--	--	--	65	118	65	118	--	--	--	--	--	--
TPH-Diesel Range Organics (C10-C22)	--	0.25	NA[5]	NV	8.3	NA[5]	50	150	50	150	50	150	30	50	150	30
TPH-Oil Range Organics (>C22-C36)	--	0.1	NA[5]	NV	5.0	NA[5]	50	150	50	150	50	150	30	50	150	30
o-Terphenyl (surr)	84-15-1	--	--	--	--	--	57	115	57	115	--	--	--	--	--	--
Pesticides by USEPA SW846 Method 8081A		µg/L	µg/L	µg/L	µg/kg	mg/kg	%	%	%	%	%	%	%	%	%	%
Aldrin	309-00-2	0.04	NV	NV	1.7	0.229	43	118	60	115	45	115	33	72	112	50
alpha-BHC	319-84-6	0.03	NV	NV	1.7	0.622	66	115	54	115	72	115	50	62	110	17
beta-BHC	319-85-7	0.06	NV	NV	1.7	2.18	69	119	58	115	70	118	50	63	114	17
delta-BHC	319-86-8	0.09	NV	NV	1.7	NV [3]	77	124	62	115	57	104	50	59	105	19
gamma-BHC (Lindane)	58-89-9	0.04	NV	0.2	1.7	4.64	65	117	59	115	71	118	26	66	116	24
alpha-Chlordane	5103-71-9	0.05	NV	2	1.7	14.6	66	120	60	115	74	114	50	72	112	18
gama-Chlordane	5103-74-2	0.05	NV	2	1.7	14.6	64	120	60	115	72	112	50	71	114	21
Dieldrin	60-57-1	0.02	NV	NV	1.7	0.245	68	119	63	117	74	118	22	74	119	25
4,4'-DDD	72-54-8	0.11	NV	NV	1.7	16.3	63	127	57	118	76	117	50	70	118	20
4-4'-DDE	72-55-9	0.04	NV	NV	1.7	11.5	66	119	61	115	72	112	50	74	117	15
4-4'-DDT	50-29-3	0.12	NV	NV	2	15.8	53	128	53	125	59	119	25	63	122	29
Endrin	72-20-8	0.06	NV	2	1.7	18.3	66	127	61	121	71	115	39	71	114	30
Endosulfan sulfate	1031-07-8	0.66	NV	NV	1.7	NV [3]	70	119	58	118	69	117	50	71	126	22
Endrin aldehyde	7421-93-4	0.23	NV	NV	1.7	NV [3]	55	119	54	115	73	113	50	64	104	29
Endrin ketone	53494-70-5	0.1	NV	NV	1.7	NV [3]	63	122	61	118	71	121	50	74	120	20
Endosulfan-I	959-98-8	0.02	NV	NV	1.7	367	61	116	55	115	75	115	50	72	113	26
Endosulfan-II	33213-65-9	0.04	NV	NV	1.7	367	63	117	60	115	75	118	50	74	117	20
Heptachlor	76-44-8	0.03	NV	0.4	1.7	0.871	56	116	61	115	52	115	27	71	117	18
Heptachlor epoxide	1024-57-3	0.08	NV	0.2	1.7	0.053 [4]	70	119	62	112	74	114	50	73	113	18
Mehoxychlor	72-43-5	1.8	NV	40	3.3	310 [4]	50	130	52	123	62	116	50	66	117	23
Toxaphene	8001-35-2	2.5	NV	3	170	3.56	63	118	54	135	63	142	29	51	139	23

Table 4-2
Summary of Laboratory QC Limits

Parameter	CAS No.	RL / Evaluation Criteria					LCS				Matrix Spike Water			Matrix Spike Soil		
		Water			Soil		Water		Soil		MS Recovery		MSD	MS Recovery		MSD
		RL	NMWQCC[1]	USEPA MCL	RL	SSL[2]	LCL	UCL	LCL	UCL	LCL	UCL	RPD	LCL	UCL	RPD
Herbicides by USEPA SW846 Method 8151A		µg/L	µg/L	µg/L	µg/kg	mg/kg	%	%	%	%	%	%	%	%	%	%
Dalapon	75-99-0	2	NV	200	40	1,800 [4]	51	141	11	87	51	141	30	11	87	50
Dicamba	1918-00-9	2	NV	NV	40	1,800 [4]	53	153	11	87	53	153	30	11	87	50
Dichlorprop	120-36-5	4	NV	NV	80	NV [3]	39	136	35	115	39	136	30	78	180	50
Dinoseb	88-85-7	0.6	NV	7	12	61 [4]	10	142	5	166	10	142	30	5	166	50
MCPA	94-74-6	400	NV	NV	8,000	31 [4]	50	150	37	115	50	150	30	54	135	50
MCPP	93-65-2	400	NV	NV	8,000	61 [4]	67	141	48	132	67	141	30	65	135	50
2,4-D	94-75-7	4	NV	70	80	690 [4]	15	140	32	97	15	140	30	32	97	40
2,4-DB	94-82-6	4	NV	NV	80	490 [4]	63	148	37	119	63	148	30	51	108	50
2,4,5-T	93-76-5	1	NV	NV	20	610 [4]	29	168	24	98	29	168	30	24	98	40
2,4,5-TP (Silvex)	93-72-1	1	NV	50	20	490 [4]	45	165	48	119	45	165	30	48	119	40
Perchlorate by USEPA SW846 Method 6860		µg/L	µg/L	µg/L	ng/kg	mg/kg	%	%	%	%	%	%	%	%	%	%
Perchlorate	7778-74-7	0.1	NV	15 [5]	1,000	54.8	85	115	70	130	80	120	15	70	130	15
Radiochemistry		pCi/L	pCi/L	pCi/L	pCi/g	pCi/g	%	%	%	%	%	%	%	%	%	%
Carbon-14 by EERF Method C-01-1	14762-75-5	20	NV	2,000	5	2,570,000 [7]	38	112	62	109	37	121	40	78	110	40
Tritium by USEPA Method 906.0	10028-17-8	500	NV	20,000	1	323,000,000 [7]	77	115	70	120	59	137	40	80	103	40
Radium 226 by USEPA Method 903.0 MOD	13982-63-3	1	30	5	1	1,570 [7]	72	130	65	140	72	130	40	60	139	40
Radium 228 by USEPA Method 904 MOD/SW846 9320	15262-20-1	1	30	5	1	3,470 [7]	61	139	51	140	60	140	40	50	135	40
General Chemistry		mg/L	mg/L	mg/L	mg/kg	mg/kg	%	%	%	%	%	%	%	%	%	%
Nitrate by USEPA MCAWW Method 353.2	14797-55-8	0.1	10	10	1	125,000	86	110	90	110	86	110	20	90	110	20
Sulfate by USEPA SW846 9056	14808-79-8	5	600	250 [6]	50	NV [3]	86	109	86	107	80	120	20	86	107	20
Chloride by USEPA SW846 Methods 9056/SM19 4500CL C	16887-00-6	3	250	250 [6]	30	NV [3]	90	110	89	109	90	110	10	89	109	10
Moisture Content by USEPA MCAWW Method 160.3	--	--	--	--	--	--	--	--	--	--	--	--	--	--	--	--
Total Dissolved Solids by USEPA SM18 Method 2540C	--	10	1,000	500 [6]	--	--	90	110	--	--	--	--	--	--	--	--

Notes:

µg/kg = Micrograms per kilogram
µg/L = Micrograms per liter
USEPA = U.S. Environmental Protection Agency
LCL = Lower Control Limit
LCS = Laboratory Control Sample
mg/kg = Milligrams per kilogram
mg/L = Milligrams per liter
TPH = Total Petroleum Hydrocarbons
ng/kg = Nanograms per kilogram

MS = Matrix Spike
MSD = Matrix Spike Duplicate
RL = Reporting Limit
RPD = Relative Percent Difference
UCL = Upper Control Limit
VOCs = Volatile Organic Compounds
SVOCs = Semi-volatile Organic Compounds
TAL = Target Analyte List

PCBs = Polychlorinated biphenyls
NV = No Value
NA = Not Applicable
CAS No. = Chemical Abstract Number
NMED = New Mexico Environmental Department
SSL = Soil Screening Level
MCAWW = Methods for Chemical Analysis of Water and Wastes
NMWQCC = New Mexico Water Quality Control Commission

EERF = Eastern Environmental Radiation Facilities
SM = Standard Method
SW = USEPA Office of Solid Waste
MOD = Modified
MCL = Maximum Contaminant Level
surr = Surrogate
pCi/L = Pico Curies per Liter
pCi/g = Pico Curies per gram

[1]NMWQCC Standards for Groundwater, if 10,000 mg/L TDS Concentration or Less, New Mexico Administrative Code 20.6.2.3103
[2]NMED, Technical Background Document for Development of Soil Screening Levels, Revision 5.0, August 2009 (Residential Soil)
[3]No Value established for NMED Residential SSL (August 2009) and USEPA Regions 3, 6, and 9 RSL (April 2009)
[4]USEPA Regions 3, 6, and 9 Regional Screening Levels (RSLs) (April 2009)
[5]Combined TPH values (GRO/DRO/ORO) will be compared to the applicable petroleum products presented in the NMED, TPH Screening Guidelines, October 2006
[6]USEPA Secondary Drinking Water Standard
[7] USEPA Soil Screening Guidance for Radionuclides: Technical Background Document; Table A.1 (USEPA, October 2000)

ATTACHMENT A

TESTAMERICA LABORATORIES, INC., SELF-DECLARATION FORM (MAY 2008)

USACE Candidate Environmental Laboratory
Self-Declaration Form

The following form is to provided to the candidate environmental laboratory by the COR, filled-out and returned by the laboratory (with the accompanying required documentation specified below), and evaluated by the COR for policy compliance before the laboratory can provide environmental analytical support to USACE contracts. Before testing services can be performed by the laboratory, the COR will notify the candidate laboratory of the acceptability of the declaration and supporting documentation. The form is to be updated on an annual basis.

Legal name of laboratory:	**TestAmerica Laboratories Inc.**
Street address:	**4955 Yarrow Street** **Arvada, CO 80002**
Name of Owner:	**TestAmerica Laboratories Inc.**
Owner address (if different):	**4101 Shuffel Street NW** **North Canton, OH 44720**
Phone number:	**(330) 497-9396**
E-Mail address:	
Web site:	**www.testamericainc.com**
Laboratory director:	**Robert C. Hanisch**
Phone number:	**303-736-0183**
E-Mail address:	**Robert.hanisch@testamericainc.com**
Quality Assurance Officer:	**Karen Kuoppala**
Phone number:	**303-736-0184**
E-Mail address:	**Karen.kuoppala@testamericainc.com**

USACE Candidate Environmental Laboratory
Self-Declaration Form

The undersigned persons understand and acknowledge that:

a. Laboratory operations, which will be utilized for testing in support of environmental analytical testing for USACE, are in full compliance with the DOD Quality Systems Manual (Version 3, including NELAC Standard Chapter 5 and Appendix requirements). All written documentation provided to USACE, accompanying this declaration, accurately reflect policy/practices implemented by laboratory staff.

b. The Laboratory will notify USACE immediately of change in status of laboratory operations that may affect on-going compliance as declared per item a.

c. The Laboratory acknowledges that USACE may audit the laboratory, relative to policy compliance at any time deemed appropriate; and will allow a designated COR full access to information and facilities to conduct such audit operations.

d. Signatories are authorized to sign this form on behalf of the owner and that there are no misrepresentations in the information provided in the initial laboratory assessment package.

Signature of Quality Assurance Officer:	Karen Buonpane
Date:	05-02-08
Signature of Laboratory Director:	Robert Cottanusich
Date:	5/2/08

Note - A completed declaration form is to be accompanied by:

- a copy of the laboratory's current Quality Manual (including QA SOPs and Ethics program policies/procedures),
- sample preparation and determinative method SOPs for all project required parameters, and
- method performance data — PT sample results (2 rounds), MDL studies and LCS control ranges for the preparatory-determinative method combinations — for all project required parameters. Documentation related to NELAP accreditation(s) for parameters can serve as evidence for successful PT samples results.

APPENDIX B

HISTORICAL DATA SUMMARIES

APPENDIX B

B-1

FINAL INFILTRATION AND INFLOW STUDY REPORT

Final

INFILTRATION AND INFLOW STUDY REPORT

VOLUME I

Holloman Air Force Base

Indefinite Delivery Contract Number:
F44650-94-D0003-DO5008

Prepared for:

Department of the Air Force
Air Combat Command
HQ ACC/CEVC
129 Andrews Street, Suite 102
Langley Air Force Base, Virginia 23665-2769

Prepared by:

Radian International LLC
8501 N. Mopac Blvd.
Austin, Texas 78720-1088

August 1998

Table 2-2
Summary of Sewage Collection System

Sewer System Appurtenances	Holloman AFB Sanitary Sewer Sub-Basin Quantities										
	1	2	3	4	5	6	7	8	9	10	Total
Gravity Sewer Mains - Pipe Type (Linear feet)											
Vitrified Clay Pipe (VCP)	0	665	0	2,689	2,214	113	1,263	1,720	395	50	**9,109**
Polyvinylchloride Pipe (PVC)	8,170	19,849	0	24,636	16,181	6,135	7,490	9,579	11,515	22,379	**125,934**
Concrete Pipe (CON)	0	4,708	2,647	185	210	0	165	1,517	1,070	1,052	**11,554**
Cast Iron Pipe (CIP)	0	0	0	210	545	0	0	0	0	665	**1,420**
Asbestos Cement	0	227	0	426	250	0	1,530	0	0	0	**2,433**
Other	0	5,538	0	505	1,530	0	5,270	0	0	0	**12,843**
Not Defined	585	565	0	0	0	0	0	190	0	180	**1,520**
Totals	**8,755**	**31,552**	**2,647**	**28,651**	**20,930**	**6,248**	**15,718**	**13,006**	**12,980**	**24,326**	**164,813**
Gravity Sewer Mains - Pipe Diameter (Linear feet)											
6"	0	1,385	85	5,798	2,697	1,970	3,670	696	565	4,981	**21,847**
8"	0	14,522	830	15,991	13,979	273	12,048	12,120	12,415	11,163	**93,341**
10"	2,820	1,055	0	4,412	2,107	4,005	0	0	0	1,594	**15,993**
12"	1,080	7,088	1,732	1,780	1,162	0	0	0	0	365	**13,207**
15"	320	4,062	0	670	985	0	0	0	0	5,623	**11,660**
18"	0	130	0	0	0	0	0	0	0	420	**550**
21"	530	2,745	0	0	0	0	0	0	0	0	**3,275**
24"	3,420	0	0	0	0	0	0	0	0	0	**3,420**
Not Defined	585	565	0	0	0	0	0	190	0	180	**1,520**
Totals	**8,755**	**31,552**	**2,647**	**28,651**	**20,930**	**6,248**	**15,718**	**13,006**	**12,980**	**24,326**	**164,813**
Gravity Sewer Mains - Manhole Construction (No.)											
Precast (PRE)	18	50	0	63	47	16	23	35	33	57	**342**
Brick (BRK)	0	9	5	24	28	3	8	2	5	3	**87**
Fiberglass	0	5	0	0	0	0	19	0	0	4	**28**
Cement Block (BLK)	0	7	2	0	0	1	0	3	0	0	**13**
Poured In Place (PIP)	0	4	1	0	0	0	0	0	0	6	**11**
Plastic	0	0	0	2	0	0	0	0	0	0	**2**
Not Defined	0	0	0	3	0	0	1	0	0	0	**4**
Totals	**18**	**75**	**8**	**92**	**75**	**20**	**51**	**40**	**38**	**70**	**487**
Gravity Sewer Mains - Manhole Status (No.)											
Inspected	18	75	8	92	75	20	51	40	38	70	**487**
Could Not Find (CNF)	1	2	0	5	6	1	3	0	0	2	**20**
Buried	0	0	0	1	0	0	0	0	0	0	**1**
Could Not Open (CNO)	1	1	0	3	2	0	0	0	0	0	**7**
Influent Collection Box	1	0	0	0	0	0	0	0	0	0	**1**
Aqueous Film-Forming Foam (AFFF)	0	0	0	0	0	0	0	0	0	7	**7**
Totals	**21**	**78**	**8**	**101**	**83**	**21**	**54**	**40**	**38**	**79**	**523**
Lift Stations (No.)											
Inspected	0	0	0	1	0	0	0	1	0	0	**2**
Not Inspected	1	1	1	3	1	0	1	9	0	1	**18**
Totals	**1**	**1**	**1**	**4**	**1**	**0**	**1**	**10**	**0**	**1**	**20**

APPENDIX B

B-2

INDUSTRIAL WASTEWATER PRETREATMENT STUDY REVISED PHASE I DRAFT REPORT

DD8911.5169

Industrial Wastewater Pretreatment Study Revised Phase I Draft Report Holloman Air Force Base New Mexico

Contract No. F44650-94-D0006
Delivery Order No. 5003

January 1998

Prepared for:

DEPARTMENT OF THE AIR FORCE
Headquarters, Air Combat Command
Langley Air Force Base, Virginia

Prepared by:

Ecology and Environment, Inc.

ecology and environment, inc.
International Specialists in the Environment

BUFFALO CORPORATE CENTER 368 Pleasant View Drive, Lancaster, New York 14086
Tel: 716/684-8060, Fax: 716/684-0844

recycled paper

Table 1-7

SUMMARY OF RESULTS, INDUSTRIAL WASTEWATER PRETREATMENT SURVEY
HOLLOMAN AFB

Building Number	Building Name	Industrial Wastewater Flow Type(s)	Average Daily Flow (gallons)	Maximum Daily Flow (gallons)	Pollutants of Concern	Existing Pretreatment	Proposed Sampling Location(s)	Sample Type(s)
15	Hospital – Radiology	X-ray processing Rack washing	8	31	Heavy metals Developer Chemicals	SRU	SE SRU influent SE SRU effluent SE Processor	Grab Grab Grab
15	Hospital –Surgical Services	Floor washing Sterilization	11	13	BOD, COD, TDS	None	None	None
15	Hospital-Laboratory	Sinks	<1	<1	Chemicals used in analysis	None	None	None
15	Hospital - Boiler Room	Boiler/ chiller system	<1	<1	None	None	None	None
16	AAFES Washrack	Vehicle washing	6,600	12,000	POLs, surfactants, oil & grease, TSS	Sand trap #54	Washrack	Dye test
17	Flight Medicine (Dental)	Floor washing X-ray processing	2	17	Heavy metals (silver), surfactants	SRU at Building 15	None	None
18	AAFES Service Station	Floor washing	1	5	POLs, oil & grease, TSS	OWS #55	None	None
56	Washrack associated with Building 56	Vehicle washing	720	720	POLs, BOD, COD, oil & grease, TSS	OWS #14	None	None
138	Motorpool Washrack	Vehicle washing Equipment washing Floor washing	9,000	16,200	Surfactants, POLs, oil & grease, BOD, COD, TSS	OWS #9	OWS influent OWS effluent	Grab Grab
193	General and Special Purpose Maintenance	Floor washing	24	60	BOD, COD, surfactants, oil & grease, POLs, TSS	Grit chamber OWS #8B	None	None

Key at end of Table

Table 1-7

SUMMARY OF RESULTS, INDUSTRIAL WASTEWATER PRETREATMENT SURVEY HOLLOMAN AFB

Building Number	Building Name	Industrial Wastewater Flow Type(s)	Average Daily Flow (gallons)	Maximum Daily Flow (gallons)	Pollutants of Concern	Existing Pretreatment	Proposed Sampling Location(s)	Sample Type(s)
195	Allied Trades	Radiator test tank Glass grinding coolant	22	155	POLs, BOD, COD, heavy metals, VOCs, SVOCs, TSS	Screens in tank	Radiator test tank	Grab
198	General Purpose Shop	Floor washing	41	60	POLs, BOD, COD, surfactants, oil & grease, TSS	Grit chamber OWS #7A OWS #7B	None	None
231	Auto Hobby Shop	Floor washing Equipment washing Vehicle washing AFFF	112	1,509	BOD, COD, surfactants, heavy metal, VOCs, SVOCs, oil & grease, POLs, TSS	Sand trap #35C OWS #35B	OWS influent OWS effluent	Grab Grab
273	Dental Clinic	Floor washing X-ray processing	19	27	Heavy metal (silver), surfactants	SRU	SRU influent SRU effluent	Grab Grab
282	Lockheed Martin-Corrosion Control and Wheel and Tire Shop	Floor washing (discharged to parts washer)	0	0	None	OWS #11A OWS #11B	None	None
285	German Air Force Parking Hangar	Floor washing AFFF	9	30	POLs, surfactants, TSS	OWS #58 and AFFF holding pond	OWS influent OWS effluent	Grab Grab
286	German Air Force Maintenance Hangar	Floor washing AFFF	9	30	POLs, oil & grease, TSS, surfactants	OWS #58 and AFFF holding pond	None	None
300	Lockheed Martin-Engine Shop	Floor washing	7	50	POLs, oil & grease, TSS, surfactants	Sediment trap #13	OWS influent OWS effluent	Grab Grab
301	Lockheed Martin-Phase Maintenance	Floor washing (discharged at Building 309)	0	0	POLs, oil & grease, TSS	None	Floor wash water	Grab

Key at end of Table

Table 1-7

SUMMARY OF RESULTS, INDUSTRIAL WASTEWATER PRETREATMENT SURVEY HOLLOMAN AFB

Building Number	Building Name	Industrial Wastewater Flow Type(s)	Average Daily Flow (gallons)	Maximum Daily Flow (gallons)	Pollutants of Concern	Existing Pretreatment	Proposed Sampling Location(s)	Sample Type(s)
304	Fire Department (Station 1)	Floor washing Vehicle washing Equipment washing	2,585	2,730	POLs, oil & grease, BOD, surfactants, TSS	Grease trap OWS #19B OWS #40	Sanitary sewer	Dye test
304A	Fire Truck Maintenance	Floor washing AFFF	26	90	POLs, COD, BOD, surfactants, oil & grease, TSS	OWS #19B	None	None
306	T-38 Washrack	Aircraft washing	91	1,250	Oil & grease, POLs, VOCs, SVOCs, metals	OWS #18	None	None
308	Lockheed Martin-AGE Shop	Floor washing (discharged to Building 309)	0	0	Oil & grease, POLs, COD, BOD, surfactants, TSS	None	None	None
309	Lockheed Martin-AGE Shop	Floor washing (includes flow from Buildings 301, 308 and 315) Ground equipment washing Vehicle washing	107	1,130	POLs, BOD, TSS, surfactants, oil & grease	OWS #10A OWS #10B	None	None
315	Lockheed Martin - Fuel Cell Repair	Floor washing (discharged to Building 309 washrack)	0	0	None	None	Floor wash water	Grab
332	Visual Information Support	Photoprocessing	270	278	Heavy metals, Process/ developer chemicals	SRU	SRU influent SRU effluent C-41 Processor effluent	Grab Grab Grab
374	Pest Management	Vehicle washing Equipment washing Floor washing	231	1,020	Herbicides, pesticides, POLs, oil & grease, BOD, COD, surfactants, TSS	OWS #51	OWS effluent	Grab
578	48th Air Rescue	Engine washing, aircraft washing, floor washing, trench drain flushing, AFFF	39	1005	BOD, oil & grease, POLs, VOCs, SVOCs, metals	OWS #53	Helicopter engine wash water	Grab

Key at end of Table

Table 1-7

SUMMARY OF RESULTS, INDUSTRIAL WASTEWATER PRETREATMENT SURVEY HOLLOMAN AFB

Building Number	Building Name	Industrial Wastewater Flow Type(s)	Average Daily Flow (gallons)	Maximum Daily Flow (gallons)	Pollutants of Concern	Existing Pretreatment	Proposed Sampling Location(s)	Sample Type(s)
704	POL Maintenance Washrack	Vehicle washing	14	340	POLs, surfactants, oil & grease, TSS	OWS #1	OWS influent OWS effluent	Grab Grab
702	Refueling Vehicle Maintenance	Floor washing	11	80	POLs, oil & grease, COD, BOD, surfactants, TSS	Grit chamber OWS #2	OWS influent OWS effluent	Grab Grab
800	Propulsion Flight Engine Repair	Floor washing Trailer washing	21	70	POLs, oil & grease, surfactants, VOCs, SVOCs, metals, TSS	OWS #23B	Potable water OWS influent OWS effluent Sanitary sewer	Grab Grab Grab Dye test
822	Aerospace Ground Equipment Maintenance	Floor washing Vehicle washing Equipment washing	177	1,215	POLs, antifreeze, BOD, COD, surfactants, heavy metals, TSS	OWS #25B	OWS influent OWS effluent	Grab Grab
827	AGE Washrack	Vehicle washing Equipment washing Floor washing	376	685	POLs, oil & grease, BOD, COD, surfactants, TSS	OWS #26	OWS influent OWS effluent	Grab Grab
830	Structural Maintenance	AFFF	0	0	BOD, heavy metals, VOCs, SVOCs	OWS #27A OWS #27B	None	None
837	Aerospace Fuels Laboratory	Canister rinsing Glassware rinsing	36	50	POLs, oil & grease, surfactants, VOCs, SVOCs	OWS #41	OWS influent OWS effluent	Grab Grab
844	Dyncorp Vehicle Maintenance	None	0	0	None	OWS #36B Grit chamber	None	None
851	Non-Destructive Inspection	Floor washing Vehicle washing Liquid fluorescent penetrant X-ray processing	64	1,346	BOD, COD, heavy metals, surfactants, TSS	SRU	SRU influent SRU effluent Dye penetrant rinse water X-ray processor effluent	Grab Grab Grab Grab

Key at end of Table

Table 1-7

SUMMARY OF RESULTS, INDUSTRIAL WASTEWATER PRETREATMENT SURVEY HOLLOMAN AFB

Building Number	Building Name	Industrial Wastewater Flow Type(s)	Average Daily Flow (gallons)	Maximum Daily Flow (gallons)	Pollutants of Concern	Existing Pretreatment	Proposed Sampling Location(s)	Sample Type(s)
856	Dyncorp Washrack at the Paint and Body Shop	Vehicle Washing	514	5,760	POLs, oil & grease, BOD, COD, surfactants, TSS	OWS #38	OWS influent OWS effluent	Grab Grab
866	Wheel and Tire Repair and Reclamation/ Hydraulics	Floor washing	1	10	POLs, surfactants, oil & grease, TSS	None	Sanitary Sewer	Dye test
868	Fuel Systems Repair/ 7th FS Maintenance Hangar	Floor washing Vehicle washing AFFF (deactivated)	76	510	POLs, oil & grease, surfactants, TSS	AFFF holding pond	None	None
869	Fire Department (Station 2)	Floor washing Vehicle washing Equipment washing	442	3,060	POLs, oil & grease, BOD, surfactants, TSS	OWS #44A OWS #44B	NW outdoor trench drain	Grab
877	Phase Inspection/ Egress	Floor washing	7	36	POLs, oil & grease, TSS, VOCs, SVOCs	OWS #37A	OWS influent OWS effluent	Grab Grab
897	Photo Lab	Floor washing Equipment washing Photoprocessing	376	1,185	Heavy metals (silver), chemicals in developing process	Primary SRU Secondary SRU	Primary SRU influent and effluent Secondary SRU effluent Flexicolo or RA Developer effluent	Grab Grab Grab Grab
898	Aircraft Maintenance 9th FS	Floor washing AFFF	2	175	POLs, BOD, COD, oil & grease, TSS	None	None	None
901	Transportation/AGE	Floor washing Mop rinsing	10	40	POLs, BOD, COD, surfactants, oil & grease, TSS	None	None	None
902	Structural Maintenance /Supply	Floor washing Mop rinsing	16	200	Surfactants, oil & grease, TSS	None	None	None

Table 1-7

SUMMARY OF RESULTS, INDUSTRIAL WASTEWATER PRETREATMENT SURVEY
HOLLOMAN AFB

Building Number	Building Name	Industrial Wastewater Flow Type(s)	Average Daily Flow (gallons)	Maximum Daily Flow (gallons)	Pollutants of Concern	Existing Pretreatment	Proposed Sampling Location(s)	Sample Type(s)
907	MMS Vehicle Washrack	Vehicle washing Equipment washing	60	420	POLs, BOD, COD, surfactants, oil & grease, TSS	OWS #29A OWS #29B	OWS #29A influent OWS #29B effluent	Grab Grab
918	MMS Equipment Washrack	Floor washing Equipment washing Vehicle washing ROWPU purging	219	950	POLs, surfactants, oil & grease, TSS	OWS #39 (outside washrack) OWS #39B and OWS #39C (Inside trench drains)	OWS #39 influent OWS #39 effluent	Grab Grab
1078/1080	Lockheed Martin Services, Inc. and associated Washrack	Vehicle washing Aircraft washing	148	1,495	POLs, surfactants, oil & grease, TSS, metals	OWS #31 (1080) OWS #32 (1078 – washrack)	OWS #33 influent OWS #32 effluent	Grab Grab
1178	Welding, Nondestructive Inspection (NDI), Paint Shop	Floor washing Fluorescent penegraph TIG welder coolant	7	33	Heavy metals, VOCs, SVOCs, TSS	None	Dye penetrant rinse water	Grab
1185	Heat Treatment	TIG welder coolant Heat treating furnace coolant	824	2,882	POLs, TSS	None	None	None
1226	Equipment Maintenance	Floor washing Trailer washing	20	75	POLs, oil & grease, surfactants, TSS	OWS #56	None	None
11285	German Air Force Test Cell	None	0	0	None	OWS #57	None	None
11648	Lockheed Martin-F4 Test Cell	Floor washing	11	75	POLs, TSS	OWS #22	None	None
11649	F-117A Test Cell	Floor washing	11	75	POLs, oil & grease, surfactants, TSS	OWS #22	OWS effluent at manhole	Grab
21812	8th FS Hangarette (seven total)	Floor washing AFFF	63	525	POLs, BOD, metals TSS	OWS #46 AFFF holding pond	OWS influent OWS effluent OWS/AFFF pond/lift station	Grab Grab Grab/Dye test

Key at end of Table

Table 1-7

SUMMARY OF RESULTS, INDUSTRIAL WASTEWATER PRETREATMENT SURVEY
HOLLOMAN AFB

Building Number	Building Name	Industrial Wastewater Flow Type(s)	Average Daily Flow (gallons)	Maximum Daily Flow (gallons)	Pollutants of Concern	Existing Pretreatment	Proposed Sampling Location(s)	Sample Type(s)
21818	7th FS Hangarette (seven total)	Floor washing AFFF	28	210	POLs, BOD, metals TSS	OWS #46 AFFF holding pond	Floor wash water	Grab
21820	9th FS Hangarette (eight total)	Floor washing AFFF	32	200	POLs, BOD, metals TSS	OWS #46 AFFF holding pond	None	None
TOTAL INDUSTRIAL WASTEWATER FLOW			**23,502**	**60,114**				
-	WWTP	Total Influent	—	—	POLs, BOD, COD, metals, TSS, VOCs	—	Influent Effluent	3-day Composite 3-day Composite
15	Hospital	X-ray processing Sterilization Floor washing	—	—	BOD, COD, surfactants, VOCs, SVOCs, TDS, metals, phosphates, sulfides, chlorides	SRUs	Manhole 247A	2-day Composite
-	German Air Force	AFFF fire suppressant Floor washing	—	—	POLs, BOD, TDS, TSS, surfactants	Various OWSs AFFF pond	Manhole 336A OWS/AFFF Pond/Lift Station	2-day Composite Dye test
-	Lockheed Facilities	Floor washing Aircraft washing Vehicle washing Ground equipment washing	—	—	POCs, TSS, BOD, COD, TDS, surfactants	Various OWSs	Manhole 280A	2-day Composite
-	UST Leak Area	Fuel contaminated groundwater	—	—	POLs, COD, BOD, phenol, TSS, TDS, SVOCs	—	Manhole 418A	2-day Composite
-	Inactive manhole 400	Fuel contaminated groundwater	—	—	Oil & grease, POLs, VOCs	None	Manhole 400	Grab
-	Inactive manhole 402	Fuel contaminated groundwater	—	—	Oil & grease, POLs, VOCs	None	Manhole 402	Grab
-	Inactive manhole 403	Fuel contaminated groundwater	—	—	Oil & grease, POLs, VOCs	None	Manhole 403	Grab

Key at end of Table

Key:

AFFF -	Aqueous Film-Forming Foam
AGE -	Aerospace Ground Equipment
BOD -	Biochemical Oxygen Demand
COD -	Chemical Oxygen Demand
FS -	Fighter Squadron
NDI -	Non-Destructive Inspection
OWS -	In-Ground Oil/Water Separator
POLs -	Petroleum, Oil, and Lubricants
RUWPU -	Reverse Osmosis Water Purification Unit
SE -	Southeast
SRU -	Silver Recovery Unit
SVOCs -	Semi-Volatile Organic Compounds
TDS -	Total Dissolved Solids
TIG -	
TSS -	Total Suspended Solids
UST -	Underground Storage Tank
VOCs -	Volatile Organic Compounds
WWTP -	Wastewater Treatment Plant

APPENDIX B

B-3

BASEWIDE GEOTECHNICAL DATA

Table B-1
Basewide Geotechnical Data
SWMU 183 RFI Work Plan
Holloman AFB, New Mexico
Nationview Project No. 8080014

Sample Identificaiton	Depth (ft bgs)	Dated Sampled	Dry Bulk Density (Dry Basis) (g/mL)	Fractional Organic Carbon (%)	Moisture Content (Solids, Percent) (%)	Specific Gravity
SS12-DP13-2	1-2	6/7/2007	1.5	14.1	15.2	1.9
SS12-DP14-2	1-2	6/7/2007	1.4	8.9	21.3	1.9
SS18-DP04-6	5-6	6/5/2007	1.3	7.6	25.9	1.8
SS18-DP06-7	6-7	6/6/2007	1.4	8.4	14.5	1.8
OT20-DP06-5	4-5	6/8/2007	1.4	9.4	21.1	1.8
OT20-DP05-5	4-5	6/8/2007	1.4	15.9	18.7	1.8
OT32-SB03-10.5	9-10.5	7/23/2007	1.1	4.5	6.4	1.3
OT32-SB08-15	13.5-15	7/19/2007	1.1	9.5	9.6	1.5
OT37-SB13-12	8.5-9.5	7/24/2007	1.3	7.5	4.2	1.5
OT-37-SB09-16	14.5-16	7/24/2007	1.1	9.8	8.6	1.3
OT38-DP03-15	14-15	6/5/2007	1.1	4.1	13.9	1.4
OT38-DP02-15	14-15	6/5/2007	1.1	9.5	11.3	1.5
RW42-MW02-16	14-16	7/21/2007	1.0	13.0	5.1	1.2
RW42-MW02-26	24-25	7/21/2007	1.3	5.6	3.2	1.6
OT45-DP10-5	5-6	6/4/2007	1.4	5.5	14.1	1.8
OT45-DP11-5	5-6	6/4/2007	1.7	2.4	10.2	2.0
Basewide Average			**1.3**	**8.5**	**12.7**	**1.6**

Notes:
ft bgs - Feet below ground surface
g/mL - grams per milliliter
% - percent
DP = Direct Push
SB = Soil Boring
MW = Monitoring Well

Report of Analysis

Client Sample ID:	SS12-DP13-2		
Lab Sample ID:	F50342-1	**Date Sampled:**	06/07/07
Matrix:	SO - Soil	**Date Received:**	06/14/07
		Percent Solids:	84.8
Project:	HOLMN		

General Chemistry

Analyte	Result	RL	Units	DF	Analyzed	By	Method
Bulk Density (Dry Basis)	1.5		g/ml	1	06/18/07	LE	ASTM D2937-94 M
Fractional Organic Carbon	14.1		%	1	06/18/07 11:10	LE	ASTM D2974-87
Moisture, Percent	15.2		%	1	06/18/07	LE	EPA 160.3 M
Specific Gravity	1.9			1	06/18/07	LE	ASTM 1429

RL = Reporting Limit

Report of Analysis

Client Sample ID:	SS12-DP14-2		
Lab Sample ID:	F50342-2	**Date Sampled:**	06/07/07
Matrix:	SO - Soil	**Date Received:**	06/14/07
		Percent Solids:	78.7
Project:	HOLMN		

General Chemistry

Analyte	Result	RL	Units	DF	Analyzed	By	Method
Bulk Density (Dry Basis)	1.4		g/ml	1	06/18/07	LE	ASTM D2937-94 M
Fractional Organic Carbon	8.9		%	1	06/18/07 11:10	LE	ASTM D2974-87
Moisture, Percent	21.3		%	1	06/18/07	LE	EPA 160.3 M
Specific Gravity	1.9			1	06/18/07	LE	ASTM 1429

RL = Reporting Limit

Report of Analysis

Client Sample ID:	SS18-DP04-6		
Lab Sample ID:	F50342-6	**Date Sampled:**	06/05/07
Matrix:	SO - Soil	**Date Received:**	06/14/07
		Percent Solids:	74.1
Project:	HOLMN		

General Chemistry

Analyte	Result	RL	Units	DF	Analyzed	By	Method
Bulk Density (Dry Basis)	1.3		g/ml	1	06/18/07	LE	ASTM D2937-94 M
Fractional Organic Carbon	7.6		%	1	06/18/07 11:10	LE	ASTM D2974-87
Moisture, Percent	25.9		%	1	06/18/07	LE	EPA 160.3 M
Specific Gravity	1.8			1	06/18/07	LE	ASTM 1429

RL = Reporting Limit

Report of Analysis

Client Sample ID:	SS18-DP06-7		
Lab Sample ID:	F50342-8	**Date Sampled:**	06/06/07
Matrix:	SO - Soil	**Date Received:**	06/14/07
		Percent Solids:	85.5
Project:	HOLMN		

General Chemistry

Analyte	Result	RL	Units	DF	Analyzed	By	Method
Bulk Density (Dry Basis)	1.4		g/ml	1	06/18/07	LE	ASTM D2937-94 M
Fractional Organic Carbon	8.4		%	1	06/18/07 11:10	LE	ASTM D2974-87
Moisture, Percent	14.5		%	1	06/18/07	LE	EPA 160.3 M
Specific Gravity	1.8			1	06/18/07	LE	ASTM 1429

RL = Reporting Limit

Report of Analysis

Client Sample ID:	OT20-DP06-5		
Lab Sample ID:	F50342-3	**Date Sampled:**	06/08/07
Matrix:	SO - Soil	**Date Received:**	06/14/07
		Percent Solids:	78.9
Project:	HOLMN		

General Chemistry

Analyte	Result	RL	Units	DF	Analyzed	By	Method
Bulk Density (Dry Basis)	1.4		g/ml	1	06/18/07	LE	ASTM D2937-94 M
Fractional Organic Carbon	9.4		%	1	06/18/07 11:10	LE	ASTM D2974-87
Moisture, Percent	21.1		%	1	06/18/07	LE	EPA 160.3 M
Specific Gravity	1.8			1	06/18/07	LE	ASTM 1429

RL = Reporting Limit

Report of Analysis

Client Sample ID:	OT20-DP05-5		
Lab Sample ID:	F50342-4	**Date Sampled:**	06/08/07
Matrix:	SO - Soil	**Date Received:**	06/14/07
		Percent Solids:	81.3
Project:	HOLMN		

General Chemistry

Analyte	Result	RL	Units	DF	Analyzed	By	Method
Bulk Density (Dry Basis)	1.4		g/ml	1	06/18/07	LE	ASTM D2937-94 M
Fractional Organic Carbon	15.9		%	1	06/18/07 11:10	LE	ASTM D2974-87
Moisture, Percent	18.7		%	1	06/18/07	LE	EPA 160.3 M
Specific Gravity	1.8			1	06/18/07	LE	ASTM 1429

RL = Reporting Limit

Report of Analysis

Client Sample ID:	OT38-DP03-15		
Lab Sample ID:	F50342-5	**Date Sampled:**	06/05/07
Matrix:	SO - Soil	**Date Received:**	06/14/07
		Percent Solids:	86.1
Project:	HOLMN		

General Chemistry

Analyte	Result	RL	Units	DF	Analyzed	By	Method
Bulk Density (Dry Basis)	1.1		g/ml	1	06/18/07	LE	ASTM D2937-94 M
Fractional Organic Carbon	4.1		%	1	06/18/07 11:10	LE	ASTM D2974-87
Moisture, Percent	13.9		%	1	06/18/07	LE	EPA 160.3 M
Specific Gravity	1.4			1	06/18/07	LE	ASTM 1429

RL = Reporting Limit

Report of Analysis

Client Sample ID:	OT38-DP02-15		
Lab Sample ID:	F50342-7	**Date Sampled:**	06/05/07
Matrix:	SO - Soil	**Date Received:**	06/14/07
		Percent Solids:	88.7
Project:	HOLMN		

General Chemistry

Analyte	Result	RL	Units	DF	Analyzed	By	Method
Bulk Density (Dry Basis)	1.1		g/ml	1	06/18/07	LE	ASTM D2937-94 M
Fractional Organic Carbon	9.5		%	1	06/18/07 11:10	LE	ASTM D2974-87
Moisture, Percent	11.3		%	1	06/18/07	LE	EPA 160.3 M
Specific Gravity	1.5			1	06/18/07	LE	ASTM 1429

RL = Reporting Limit

Report of Analysis

Client Sample ID:	OT45-DP10-5		
Lab Sample ID:	F50342-9	**Date Sampled:**	06/04/07
Matrix:	SO - Soil	**Date Received:**	06/14/07
		Percent Solids:	85.9
Project:	HOLMN		

General Chemistry

Analyte	Result	RL	Units	DF	Analyzed	By	Method
Bulk Density (Dry Basis)	1.4		g/ml	1	06/18/07	LE	ASTM D2937-94 M
Fractional Organic Carbon	5.5		%	1	06/18/07 11:10	LE	ASTM D2974-87
Moisture, Percent	14.1		%	1	06/18/07	LE	EPA 160.3 M
Specific Gravity	1.8			1	06/18/07	LE	ASTM 1429

RL = Reporting Limit

Report of Analysis

Client Sample ID:	OT45-DP11-5		
Lab Sample ID:	F50342-10	**Date Sampled:**	06/04/07
Matrix:	SO - Soil	**Date Received:**	06/14/07
		Percent Solids:	89.8
Project:	HOLMN		

General Chemistry

Analyte	Result	RL	Units	DF	Analyzed	By	Method
Bulk Density (Dry Basis)	1.7		g/ml	1	06/18/07	LE	ASTM D2937-94 M
Fractional Organic Carbon	2.4		%	1	06/18/07 11:10	LE	ASTM D2974-87
Moisture, Percent	10.2		%	1	06/18/07	LE	EPA 160.3 M
Specific Gravity	2.0			1	06/18/07	LE	ASTM 1429

RL = Reporting Limit

Report of Analysis

Client Sample ID:	OT32-SB03-10.5		
Lab Sample ID:	F51388-1	**Date Sampled:**	07/23/07
Matrix:	SO - Soil	**Date Received:**	07/28/07
		Percent Solids:	93.6
Project:	HOLMN		

General Chemistry

Analyte	Result	RL	Units	DF	Analyzed	By	Method
Bulk Density (Dry Basis)	1.1		g/ml	1	08/09/07	LE	ASTM D2937-94 M
Fractional Organic Carbon	4.5		%	1	08/10/07	SJL	ASTM D2974-87
Moisture, Percent	6.4		%	1	08/08/07	SJL	EPA 160.3 M
Specific Gravity	1.3			1	08/09/07	LE	ASTM 1429

RL = Reporting Limit

Report of Analysis

Client Sample ID:	OT32-SB08-15		
Lab Sample ID:	F51388-2	**Date Sampled:**	07/19/07
Matrix:	SO - Soil	**Date Received:**	07/28/07
		Percent Solids:	90.4
Project:	HOLMN		

General Chemistry

Analyte	Result	RL	Units	DF	Analyzed	By	Method
Bulk Density (Dry Basis)	1.1		g/ml	1	08/09/07	LE	ASTM D2937-94 M
Fractional Organic Carbon	9.5		%	1	08/10/07	SJL	ASTM D2974-87
Moisture, Percent	9.6		%	1	08/08/07	SJL	EPA 160.3 M
Specific Gravity	1.5			1	08/09/07	LE	ASTM 1429

RL = Reporting Limit

Report of Analysis

Client Sample ID:	OT37-SB13-12		
Lab Sample ID:	F51388-3	**Date Sampled:**	07/24/07
Matrix:	SO - Soil	**Date Received:**	07/28/07
		Percent Solids:	95.8
Project:	HOLMN		

General Chemistry

Analyte	Result	RL	Units	DF	Analyzed	By	Method
Bulk Density (Dry Basis)	1.3		g/ml	1	08/09/07	LE	ASTM D2937-94 M
Fractional Organic Carbon	7.5		%	1	08/10/07	SJL	ASTM D2974-87
Moisture, Percent	4.2		%	1	08/08/07	SJL	EPA 160.3 M
Specific Gravity	1.5			1	08/09/07	LE	ASTM 1429

RL = Reporting Limit

Report of Analysis

Client Sample ID:	OT37-SB09-16		
Lab Sample ID:	F51388-4	**Date Sampled:**	07/24/07
Matrix:	SO - Soil	**Date Received:**	07/28/07
		Percent Solids:	91.4
Project:	HOLMN		

General Chemistry

Analyte	Result	RL	Units	DF	Analyzed	By	Method
Bulk Density (Dry Basis)	1.1		g/ml	1	08/09/07	LE	ASTM D2937-94 M
Fractional Organic Carbon	9.8		%	1	08/10/07	SJL	ASTM D2974-87
Moisture, Percent	8.6		%	1	08/08/07	SJL	EPA 160.3 M
Specific Gravity	1.3			1	08/09/07	LE	ASTM 1429

RL = Reporting Limit

Report of Analysis

Client Sample ID:	RW42-MW02-16		
Lab Sample ID:	F51388-5	**Date Sampled:**	07/21/07
Matrix:	SO - Soil	**Date Received:**	07/28/07
		Percent Solids:	94.9
Project:	HOLMN		

General Chemistry

Analyte	Result	RL	Units	DF	Analyzed	By	Method
Bulk Density (Dry Basis)	1.0		g/ml	1	08/09/07	LE	ASTM D2937-94 M
Fractional Organic Carbon	13.0		%	1	08/10/07	SJL	ASTM D2974-87
Moisture, Percent	5.1		%	1	08/08/07	SJL	EPA 160.3 M
Specific Gravity	1.2			1	08/09/07	LE	ASTM 1429

RL = Reporting Limit

Report of Analysis

Client Sample ID:	RW42-MW02-26		
Lab Sample ID:	F51388-6	**Date Sampled:**	07/21/07
Matrix:	SO - Soil	**Date Received:**	07/28/07
		Percent Solids:	96.8
Project:	HOLMN		

General Chemistry

Analyte	Result	RL	Units	DF	Analyzed	By	Method
Bulk Density (Dry Basis)	1.3		g/ml	1	08/09/07	LE	ASTM D2937-94 M
Fractional Organic Carbon	5.6		%	1	08/10/07	SJL	ASTM D2974-87
Moisture, Percent	3.2		%	1	08/08/07	SJL	EPA 160.3 M
Specific Gravity	1.6			1	08/09/07	LE	ASTM 1429

RL = Reporting Limit

APPENDIX C

COMPANY SPECIFIC STANDARD OPERATING PROCEDURES

BHATE STANDARD OPERATING PROCEDURE NO. 1

SOIL SAMPLING AND SUBSURFACE INVESTIGATIONS

Bhate Standard Operating Procedure (BSOP) No. 1 and associated attachments are intended to aid in developing a systematic approach to performing soil sampling and subsurface soil investigations at various types of federal installations. The focus, structure, and organization of BSOP No. 1 are tailored to address sampling protocols and policies for Bhate Environmental Associates, Inc. field personnel in the absence of specific regulatory or installation environmental program requirements and standard operating procedures.

This page intentionally blank.

BSOP NO. 1

SOIL SAMPLING AND SUBSURFACE INVESTIGATIONS

TABLE OF CONTENTS

1 Equipment 1-1

2 Field Procedure for Soil Classification 2-1

2.1 Identification 2-2
2.1.1 Coarse-Grained Soils 2-2
2.1.2 Fine-Grained Soils 2-2
2.1.3 Organic Soils 2-3
2.2 Descriptive Format and Terminology 2-4
2.2.1 Order of Description 2-4
2.3 Primary Descriptive Elements 2-5
2.3.1 Soil Type (Group Name and Symbol) 2-5
2.3.2 Density or Consistency 2-6
2.3.3 Moisture Condition 2-8
2.3.4 Color 2-8
2.3.5 Gradation 2-9
2.3.6 Plasticity and Cohesiveness 2-9
2.3.7 Stratification/Structure 2-10
2.3.8 Geologic Interpretation 2-10
2.3.9 Other Descriptive Elements 2-11
2.3.10 Angularity and Shape of Coarse-Grained Components 2-11
2.3.11 Hardness of Coarse-Grained Components 2-12
2.3.12 Presence of Cobbles and Boulders 2-12
2.3.13 Fossils, Accessory Minerals, or Lithology of Coarse-Grained Components 2-13
2.3.14 Cementation or Presence of Calcareous Materials 2-13
2.3.15 Weathering 2-14
2.3.16 Roots, Root Holes, Animal Burrows, or Other Macro-Pores 2-14
2.3.17 Odor 2-15
2.4 Field Tests For Classifying Fines 2-15
2.4.1 Dilantancy Test 2-15
2.4.2 Soil Thread Test 2-15
2.4.3 Toughness 2-16
2.4.4 Dry Strength 2-16
2.4.5 Smear and Stickiness 2-17
2.4.6 Test Tube Test 2-17

3 Procedures For Logging Exploratory Borings 3-1

3.1 Description of Surface Conditions 3-1
3.2 Documentation of Drilling Procedures and Performance 3-1
3.3 Sampling Data.....3-2
3.4 Description of Soils and Unconsolidated Sediments 3-3
3.5 Stratigraphic Contacts and Lithologic Changes.....3-3
3.6 Groundwater Observations 3-3
3.7 Environmental Field Measurements and Observations.....3-4
3.8 Borehole Stability 3-4

4 Soil Test Borings Methods..... 4-1

4.1 Hollow Stem Auger 4-1
4.2 Mud Rotary Drilling.....4-1
4.3 Air Rotary Drilling 4-2
4.4 Rotasonic Drilling 4-2
4.5 Direct Push Technology (DPT) Sampling.....4-3

5 Surface Soil Sampling Procedures 5-1

6 Subsurface Soil Sampling Procedures 6-1

6.1 Sampling with a Hand Auger.....6-1
6.2 Sampling with a Split-Spoon 6-1
6.3 Shelby™ Tube Sampling.....6-3

7 Test Pit and Trenching Procedures 7-1

7.1 Excavation.....7-1
7.2 Collection of Soil Samples.....7-1

8 References..... 8-1

Tables

Table 2-1. Cohesionless (Predominantly Coarse-Grained) Soils.....2-7
Table 2-2. Cohesive (Predominantly Fine-Grained) Soils.....2-7
Table 2-3. Moisture Determination.....2-8
Table 2-4. Gradation Determination.....2-9
Table 2-5. Stratification/Structure Determination.....2-10
Table 2-6. Angularity Descriptions 2-12
Table 2-7. Shape Descriptions.....2-12
Table 2-8. Descriptions of Degrees of Cementation.....2-14
Table 2-9. Calcium Carbonate Content Descriptions 2-14

Attachments

1-1 HTW Drilling Log
2-1 Definitions of Soil Components and Fractions
2-2 Criteria for Estimating Plasticity and Field Classification of Fine-Grained Soil
2-3 Visual/Manual Classification Test Terminology
2-4 ASTM Flow Chart for Identifying Soils
2-5 Principal Soil Deposits
7-1 Test Pit Report

This page intentionally blank.

1 EQUIPMENT

Prior to mobilization to the field, personnel shall assemble equipment necessary to classify, describe, and log soil samples and subsurface soil conditions. At a minimum, this should include the following equipment:

- Site specific log book
- Indelible pens
- Clipboard, preferably aluminum and water proof 9 inches by 12 inches
- Straightedge
- Scale, engineer's
- Engineer's ruler (6-foot) or retractable steel tape with increments in 10ths and 100ths of feet
- Appropriate field forms (e.g., Drilling Logs)
- Standard grain size reference for sands
- ASTM Group Symbol, Group Name Charts
- Munsell™ color chart
- Eight ounce glass sample jar with lid for settling tests
- Pocket calculator
- Hand lens
- No. 200 sieve
- Pocket knife or small spatula
- Water-level tape

Additional items, which may be necessary include:

- Pocket penetrometer
- Tape, fiberglass, 100 feet with increments in 10ths and 100ths of feet
- Stainless steel weight (tag bar)

- Indelible felt-tip marking pens (Sharpie® or equivalent)
- Dilute (10 percent) hydrochloric acid

Sand grain size will be classified in accordance with the Unified Soil Classification System (USCS) scale and will be determined using field measurement tools such as the 5 x 7-inch USCS Geotechnical Gauge manufactured by W.F. McCollough of Beltsville, Maryland.

Boring logs will be prepared in the field on a Hazardous Toxic Waste (HTW) Drilling Log Form by a geologist or geotechnical engineer. Both a blank and completed example log are presented as Attachment 1-1. A geologist or geotechnical engineer will review and sign the completed log. Detailed requirements for the preparation of the HTW Drilling Log are provided in Chapter 4 of this BSOP.

2 FIELD PROCEDURE FOR SOIL CLASSIFICATION

Exploratory soil borings typically represent the single most important source of information used for characterizing subsurface soil conditions for environmental or geotechnical studies. This Chapter is intended to provide a basis for consistency among field personnel responsible for documenting subsurface soil conditions encountered in exploratory soil borings.

This BSOP presents detailed procedures for classifying and describing soils based upon the USCS and standard practices developed by the American Society for Testing and Materials (ASTM). The following descriptive elements are recommended as a minimum basis for all soil descriptions:

- Material classification
- Density or consistency
- Moisture condition
- Color
- Texture/particle size distribution
- Plasticity/cohesiveness
- Stratification/structure
- Geologic origin and/or formation name

Other factors which should be described as needed include gradation or sorting; the presence of boulders, cobbles, or bedrock fragments; angularity and shape of granular components; hardness of granular components; weathering; accessory mineral lithology; cementation; odor; and the presence of any other feature which may affect the strength or stability of the soil or contribute to secondary porosity (e.g., channel from roots or animal burrows and voids resulting from subsidence).

All of the classification procedures described in this BSOP are based upon visual inspection and simple manual tests, which can be performed in the field. It must be clearly stated in reporting that classification is based upon visual-manual procedures. If more quantitative data are required, laboratory testing should be performed on representative samples to support field descriptions.

Soils rarely exist in nature as individual components (gravel, sand, silt, or clay). Mixtures of the individual components in varying proportions are much more common. Each component contributes to the characteristics of the soil mixture. In order to classify a soil mixture, the

relative percentages of the component grain sizes must be determined. The first step is to determine whether the soil is predominantly coarse-grained (gravel and/or sand) or fine-grained (silt and/or clay). Although the USCS is based on percentage by weight, estimation of the relative percentage of soil components in the field must be based upon visual assessment of the relative volumes of materials present. After this has been performed, a mental adjustment to weight percentage, based upon experience, is accomplished. Periodic comparison of field descriptions to laboratory test results is crucial to develop this skill.

Spreading the sample out in the palm of the hand and making a visual estimate can make a rough determination of the relative weight percentages of the components present. Carefully washing the fines from a portion of a sample by mixing the soil with water and pouring off the clouded suspension of fines and water will aid in estimating the percentage of fines present by comparison with an unaltered portion. Mixing a sample with water in a jar and allowing the mixture to settle is also helpful. The coarse-grained components will fall completely out of suspension in 20 to 30 seconds.

When describing bulk samples or soils exposed in an excavation, the percentages of cobbles and boulders should be estimated by volume. The remaining soil matrix should be described independently.

Soil descriptions include estimates of the weight percentages and plasticity characteristics of the soils, which can only be determined accurately by laboratory testing. With care and experience, however, sufficient accuracy for most purposes can be attained using visual/manual techniques. Laboratory testing can therefore be minimized.

2.1 Identification

The USCS groups soils into three major divisions: coarse-grained soils, fine-grained soils, and highly organic soils. The characteristics, which define these soil groups and procedures involved in identifying the individual components, are described in the following paragraphs.

2.1.1 Coarse-Grained Soils

Coarse-grained soil components are defined as materials which would pass through the 3-inch sieve and which would be retained on the Number 200 sieve (0.075 millimeters (mm)). Coarse-grained soil components are further sub-divided by grain size as defined in Attachment 2-1. A soil is considered coarse-grained if 50 percent or more of a sample (by dry weight) is larger than 0.075 mm. The range of both fine- and coarse-grained soil components present in a sample should be determined by careful examination.

2.1.2 Fine-Grained Soils

A soil is considered fine-grained if 50 percent or more of a sample (by dry weight) is smaller than 0.075 mm (Number 200 sieve). Fines can be subdivided into silt and clay. Classification of

fine-grained soil components may be based upon mineralogy, grain-size, or physical behavior. Grain-size is difficult to estimate because of the size classes involved and the limitations imposed by field equipment such as hand lenses. Additionally, textural classification of fines can be misleading in terms of geotechnical properties. For these reasons the USCS defines the terms "silt" and "clay" solely on the basis of the plasticity characteristics of material finer than 0.075 mm.

In the field, simple tests, which can be used as indicators of plasticity, can be performed. Attachment 2-1 describes how the results of these field tests can be correlated with plasticity. Field test procedures for estimating the plasticity of soils and identifying fine-grained soil components are discussed below and summarized in Attachment 2-3. Knowledge of local soil types is also helpful for accurate field classification of fines.

2.1.3 Organic Soils

Organic soils contain sufficient organic matter, living or decaying, to significantly affect the engineering properties of the soil. Most organic soils can be considered as a special category of fine-grained soils. Topsoil, humus, peat, organic silt, organic clay, and diatomaceous earth are common examples. The water content of organic soils is typically very high. Organic soils invariably have very low shear strength in their natural state, but may exhibit high tensile strength in certain directions due to fibrous materials.

Observations of color and odor are of particular value for the identification of organic soils. Dark gray, black, and various shades of brown are characteristic colors. Any color may be expected of inorganic fines. Organic soils frequently change color when exposed to air. Many organic soils, particularly marine peats and silts, have a distinctive odor of hydrogen sulfide. This odor is especially apparent in fresh samples. Heating the sample intensifies the odor.

Organic silts and clays typically exhibit slight to medium plasticity (see Attachment 2-2 for the Criteria for Estimating Plasticity and Field Classification of Fine-Grained Soils) and form threads that are very weak, soft, and spongy near the plastic limit. Less effort is required to pull fine-grained non-fibrous organic soils apart than inorganic fines. A clean break is generally formed. The smear of organic silts and clays, although smooth, is very dull.

Peat is an organic soil characterized by the presence of vegetable matter (for example, leaves, sticks, grass, wood, and/or moss) in various stages of decomposition. These components generally impart a fibrous texture to the soil. Peat is typically brown or black in color. Peat and organic silt are common components of fresh water swamps, bogs, and tidal flats.

Diatomaceous earth is an organic soil commonly found in the lower stratum of peat bogs. This material is composed primarily of the siliceous skeletal remains of diatoms, which accumulated in lakes and swamps. The amount and nature of impurities is highly variable and may include sponge spicules and radiolarian remains as well as organic and inorganic silt and clay. Color ranges from white to yellow to various shades of brown and gray.

Another important consideration in the identification of organic soils may be the location with respect to topography. Low-lying swampy areas commonly contain highly organic soils.

2.2 Descriptive Format and Terminology

The USCS provides useful information about soil gradation and plasticity. However, critical information necessary for site interpretation and evaluation are not included in the USCS. For example, nearly all the fine-grained deposits in northeastern Illinois and southeastern Wisconsin (loess, several till members or formations, and various glaciolacustrine and glaciofluvial deposits) can be classified as a LEAN CLAY (CL) using the USCS alone, yet each of these sediment types differ significantly in density and shear strength, lateral and vertical variability, and hydraulic conductivity. The USCS should therefore be supplemented with additional information. The following discussion identifies features, which should be evaluated and described to supplement the USCS.

2.2.1 Order of Description

The descriptive format begins with the USCS group name and symbol, which is discussed in more detail below. A detailed description, based upon ASTM standards, follows the USCS classification. For consistency, the primary descriptive elements listed below should be included in all soil descriptions, presented in the following standardized order:

- USCS group name and symbol (underlined and capitalized)
- Density or consistency
- Moisture condition
- Color
- Gradation (relative percentages of all soil components)
- Plasticity and cohesiveness
- Stratification and structure

A description of other pertinent properties should be included, as needed, following the primary descriptive elements listed above.

Following the detailed soil description, the probable geologic origin should be provided (in capital letters as shown). A typical description is presented below:

Poorly Graded Sand With Gravel (SP)

Loose, dry, pale yellow (2.5 YR 7/3), mostly coarse to fine sand, little gravel, cohesionless, rounded to subrounded grains; occasional layers (1 inch thick) of dry, light yellowish brown (2.5 YR 6/3) lean clay, low plasticity, cohesive (CL). ALLUVIUM.

Soil/sediment descriptions should be as comprehensive as possible, without excessive emphasis on insignificant details. Good judgment and common sense based on an understanding of geology and engineering behavior of soils is required.

2.3 Primary Descriptive Elements

2.3.1 Soil Type (Group Name and Symbol)

USCS group names and symbols should be assigned according to the flow charts presented on Attachment 2-4.

If a soil is classified as a gravel or sand and it contains 12 percent or less fines, it is considered to be either well-graded or poorly-graded, depending upon the distribution of grain sizes (gradation) present.

- Well-graded is an engineering term which indicates a continuous distribution of particle sizes from the coarsest to finest particle size of the relevant fraction. Poorly-graded pertains to sediments which lack a continuous distribution of grain sizes. Poorly-graded include uniformly-graded (predominantly one particle size or well sorted) and gap-graded or step-graded (one or more particle sizes absent) sediments.

- If a soil contains any cobbles or boulders, add “with cobbles” or “with boulders” to the group name.

- If a fine-grained soil contains (little) 15 to 25 percent sand, gravel or both, add “with sand” or “with gravel” to the group name (whichever is more predominant). Use “with sand” if the related percentages are equal.

- If a granular soil contains 10 percent (few) fines, add “with silt” or “clay” to the group name.

Use of an adjective modifier:

- If a fine-grained soil contains 30 percent or more sand or gravel (some), add “sandy” or “gravelly” to the group name (e.g., SANDY SILT, GRAVELLY LEAN CLAY).

- If a granular soil contains more than 15 percent (little) fines, use an adjective modifier (e.g., SILTY SAND, CLAYEY GRAVEL).

Use of dual USCS symbols:

- If a granular soil is estimated to contain 10 percent fines use a dual symbol.
- The first symbol should correspond to a clean gravel or sand.
- The second symbol should correspond to a gravel or sand with fines (e.g., GW-GC, SP-SM).
- Based on the USCS Plasticity Chart, do not use the combination CL-ML unless substantiated by laboratory analyses.

Use of borderline USCS symbols:

- Use to indicate a soil with properties that do not distinctly place the soil into a specific group (e.g., CL/CH, GM/SM, ML/SM).

Use of the term "and":

- Using the USCS, "and" may be used to indicate that soils are interbedded by linking group names (e.g., LEAN CLAY [CL] AND POORLY GRADED SAND [SP])

2.3.2 Density or Consistency

Density relates to cohesionless (predominantly coarse-grained) materials, while consistency relates to cohesive (predominantly fine-grained) soil. Both can be estimated from the standard penetration test. The standard penetration test is defined as the number of blows required to drive a standard 2-inch outside diameter split-barrel (spoon) sampler through 12 inches of undisturbed soil using a free falling 140 pound weight being dropped from a height of 30 inches. The blow count is recorded in 6-inch increments. The sampler may be driven 18 or 24 inches, typically corresponding to the internal length of the sample barrel. The first 6 inches is considered to be a seating drive. The sum of the blows required for the second and third 6-inch increments is defined as the penetration resistance (N-value). Standard penetration tests should be performed in accordance with procedures described in ASTM D 1586. It is essential to ensure that standard penetration test procedures adhere to this ASTM standard so that blow counts yield meaningful N-values.

Consistency can also be readily evaluated by feel or with a pocket penetrometer (PP) or vane shear instrument such as a torvane (TV). When using these methods to estimate consistency, sample disturbance should be considered critically.

Terms for describing the density or consistency of a soil are presented in Table 2-1 below:

Table 2-1. Cohesionless (Predominantly Coarse-Grained) Soils

N-Value (Blows per Foot)	Relative Density in Percent	Field Test	Density
0-4	0 – 15	Easily penetrated with ½inch reinforcing rod pushed by hand.	Very loose
5-10	15 – 35	Easily penetrated with ½inch reinforcing rod pushed by hand.	Loose
11-30	35 – 65	Penetrate 1 foot with ½inch reinforcing rod driven with 5-lb hammer	Medium dense
31-50	65 – 85	Penetrate 1 foot with ½inch reinforcing rod driven with 5-lb hammer	Dense

Table 2-2. Cohesive (Predominantly Fine-Grained) Soils

N-Value	Consistency	Manual Criteria	Unconfined Compressive Strength, q_u (Tons/Sq. Ft.)*	Undrained Shear Strength, S_u (Tons/Sq. Ft.)**
<2	Very Soft	Thumb will easily penetrate soil more than 1 inch. Exudes between thumb and fingers when squeezed in hand.	<0.25	< 0.12
2-4	Soft	Thumb will easily penetrate soil about 1 inch. Molded by light finger pressure.	0.25 - 0.5	0.12 - 0.25
5-8	Medium stiff	Thumb will indent soil about ¼ inch with moderate effort. Molded by strong finger pressure	0.5 - 1	0.25 - 0.5
9-15	Stiff	Indented by thumb ¼ inch only with great effort.	1 - 2	0.5 - 1
16-30	Very stiff	Thumb will not indent soil. Readily indented with fingernail.	2 - 4	1 - 2
31 +	Hard	Indented with difficulty with thumbnail.	>4	> 2

* Measured with pocket penetrometer.
** Measured with Torvane or similar vane shear instrument.

Since the terms for density and consistency are the first entries of the written description, the first word of the description should be capitalized and a comma used as illustrated by the following examples:

- Very soft
- Very loose

2.3.3 Moisture Condition

The moisture condition of the soil shall be described on the field boring log. Soils are described as being dry, moist, slightly moist, wet, or saturated with increasing degrees of saturation when formed into a ball in the palm of a gloved hand. Moisture condition is based on the following criteria:

Table 2-3. Moisture Determination

Description	Criteria
Dry	Forms a very weak ball, aggregated and individual soil grains break away easily from ball, dusty.
Slightly Moist	Forms a weak ball with defined finger marks, darkened color, no water staining on fingers, grains break away.
Moist	Forms a ball with defined finger marks, very light soil/water staining on fingers, darkened color will not stick.
Wet	Forms a ball with wet outline left on hand, light to medium staining on fingers, makes a weak ribbon between the thumb and forefinger.
Saturated	Forms a soft ball, free water appears briefly on soil surface after squeezing or shaking, medium to heavy soil/water coating on fingers.

2.3.4 Color

Color should be based on the Munsell™ Soil Color Charts. The charts provide a semi-quantitative aid in correlation across a site. It also provides information to help assess secondary weathering zones and moisture relationships.

When naturally wet soils are described after being allowed to dry, it should be noted on the log. Color description should not be capitalized and should be followed by the alpha-numeric Munsell™ code in parentheses as shown in the following examples:

- pale red (2.5 YR 6/2)

- very dark brown (7.5 YR 2.5/2)

2.3.5 Gradation

The soil components present in a sample should be identified as described at the beginning of this Chapter. The relative percentages of the different fractions present should be described based upon the estimations outlined in Table 2-4, using the following terms from ASTM D 2488:

Table 2-4. Gradation Determination

Description	Percentages
Mostly	50 - 100 percent
Some	30 - 45 percent
Little	15 - 25 percent
Few	5 - 10 percent
Trace	Particles are present but estimated to be less than 5 percent

The component with the highest percentage should be recorded first with the next highest percentage recorded next.

Gradation within the sand and gravel fractions must be defined or it is assumed that all fractions are present. When recording gradation, always begin with the coarser fraction, (e.g., mostly coarse to fine gravel, and mostly medium to fine sand).

2.3.6 Plasticity and Cohesiveness

If a sediment sample is predominantly fine-grained, a plasticity designation should be provided. Plasticity designations are provided on Attachment 2-2.

Additionally, the cohesiveness of soils including both fine- and coarse-grained components should be noted. Soils in which the adsorbed water and particle attraction work together to produce a mass, which holds together and deforms plastically at varying water contents are known as cohesive soils. A predominantly coarse-grained soil could be cohesive in character with as little as 20 percent fines, depending upon the overall gradation of the material and the plasticity characteristics of the fines. A soil accurately classified, as GC or SC would always be cohesive.

Mixtures of coarse- and fine-grained soils should be described as either cohesive or cohesionless.

2.3.7 Stratification/Structure

Most geologic structures may be characterized as stratified or massive, or some variation. Some terminology for describing soil structure or stratification are defined below:

Table 2-5. Stratification/Structure Determination

Description	Criteria
Stratified	Alternating layers of varying material or color with layers at least 6 mm thick; note thickness
Laminated	Alternating layers of varying material or color with the layers less than 6 mm thick; note thickness
Fissured	Breaks along definite planes of fracture with little resistance to fracturing
Slickensided	Fracture planes appear polished or glossy, sometimes striated
Blocky	Cohesive soil that can be broken down into small angular lumps which resist further breakdown
Lensed	Inclusion of small pockets of different soils, such as small lenses of sand scattered through a mass of clay; note thickness
Massive (Homogeneous)	Same color and appearance throughout
Bedding Attitude	Horizontal or Inclined (with angle)
Lithologic Contact	Sharp or Gradational (with nature of gradation)

The identification of naturally occurring fractures or planes of weakness (as opposed to those which may have been produced by the drilling or sampling process) can be made through the recognition of surface coatings, changes in oxidation state of adjacent materials, or stress surfaces such as slickensides. Common surface coatings include carbonates, organics, secondary iron, manganese oxide, and silt or clay. Changes or mottling in color adjacent to a fracture surface are generally indicative of a change in oxidation state associated with a naturally occurring fracture.

2.3.8 Geologic Interpretation

A geologic interpretation may be provided with each description. This may include a genetic interpretation (such as alluvium or saprolite), geologic age, and/or formation name. Accurate field interpretation of geologic origin may support geologic evaluations conducted later in the

office. Identification of geologic origin or depositional environment is often necessary to support interpretations of the distribution, uniformity, or variability of subsurface soils and sediments. The geomorphic position of individual boring locations (e.g., crest of a hill, terrace, edge of a flood plain, etc.) should be considered when making this determination. Common soil types and geologic interpretations are included in Attachment 2-5.

2.3.9 Other Descriptive Elements

The understanding of subsurface conditions at a site is dependent upon detailed descriptions of soil or sediment samples. The following additional characteristics should be considered and described, if pertinent. It is the responsibility of the field geologist and project staff to determine the extent of detail required. These additional elements should be appended to the primary description, separated by a semicolon.

- Angularity and shape of coarse-grained components
- Hardness of coarse-grained components
- Presence of boulders or cobbles
- Fossils
- Accessory minerals
- Lithology of coarse-grained components
- Cementation or presence of calcareous materials
- Odor
- Weathering zone
- Presence of roots, root holes, animal burrows or other macro-pores

2.3.10 Angularity and Shape of Coarse-Grained Components

The description of the angularity of coarse-grained sand, gravel, cobbles, and boulders may provide a basis for interpretation of geologic origin and correlation of geologic units encountered at different locations. The following terminology should be used:

Table 2-6. Angularity Descriptions

Description	Criteria
Angular	Particles have sharp edges and relatively planar sides with unpolished surfaces.
Subangular	Particles are similar to angular description but have rounded edges.
Subrounded	Particles have nearly planar sides but have well-rounded edges.
Rounded	Particles have smoothly curved sides and no edges.

The shape of gravel, cobbles and boulders should be described as follows:

Table 2-7. Shape Descriptions

Description	Criteria
Flat	Particles with width/thickness >3 cm
Elongated	Particles with length/width >3 cm
Flat and elongated	Particles meet criteria for both flat and elongated

2.3.11 Hardness of Coarse-Grained Components

Coarse sand and larger particles may be described as “hard” if particles do not crack, fracture, or crumble under a hammer blow. Alternatively, state what happens when particles are hit with a hammer.

2.3.12 Presence of Cobbles and Boulders

The presence of cobbles or boulders should be noted. This may be evident through observation of drill advance or by fragments recovered in samples. If possible (such as in a test pit) a volumetric estimate of the percent of cobbles or boulder present should be made. Alternatively, a qualitative description such as “occasional” or “numerous” cobbles or boulders should be provided. If any cobbles or boulders are present, “with cobbles” or “with boulders” should be appended to the USCS group name.

2.3.13 Fossils, Accessory Minerals, or Lithology of Coarse-Grained Components

Fossils are generally fragmented in cores and drill holes; however, some whole fossils may be found in cores (Mayer, 1964). The fossils present in a sample may be difficult to classify, depending on the type and quality of the specimen.

Accessory minerals constitute only a minor percentage of the bulk of a sediment sample. However, these minerals provide significant indicators of depositional environment and are useful in correlation.

Common accessory minerals include:

- Glauconite
- Sulfides (Pyrite and Marcasite)
- Feldspar
- Mica
- Siderite
- Lignite
- Heavy Minerals
- Manganese oxide
- Chert
- Kaolin
- Gypsum
- Iron oxide

Lignite and manganese oxide are frequently encountered and frequently confused with each other.

The lithology of coarse-grained soil components can also provide a valuable clue to assist with interpretations of depositional history and stratigraphic correlation. Notations such as “sand predominantly quartz” or “gravel predominantly shale fragments” may be appended to the primary description.

2.3.14 Cementation or Presence of Calcareous Materials

The degree of cementation of coarse grained soils should be described, if relevant to the sample. The criteria for this description is shown in Table 2-8:

Table 2-8. Descriptions of Degrees of Cementation

Description	Criteria
Weak	Crumbles or breaks with handling or little finger pressure
Moderate	Crumbles or breaks with considerable finger pressure
Strong	Will not crumble or break with finger pressure

Calcium carbonate is a common cementing agent. The amount of calcareous material present in a sample can be classified according to the reaction with dilute hydrochloric acid. The classification is as follows:

Table 2-9. Calcium Carbonate Content Descriptions

Description	Criteria
None	No visible reaction
Weak	Some reaction, with bubbles forming slowly
Strong	Violent reaction, with bubbles forming immediately

2.3.15 Weathering

The recognition and correlation of weathered zones can provide valuable clues for deciphering site stratigraphy. It is important to recognize, however, that soils, in the engineering sense, encompass a wide range of materials, all of which represent various stages in the weathering of bedrock. Additionally, a clear distinction must be made between the weathering of transported superficial deposits and the in-place development of residual soils from a rock mass. The recognition and description of buried weathered zones is particularly useful in terraines characterized by transported soils and sediments.

2.3.16 Roots, Root Holes, Animal Burrows, or Other Macro-Pores

Any potential source of secondary porosity, which could be significant in terms of the infiltration and movement of water or the migration of contaminants, should be described. This may include root channels (relic or active); animal burrows; cracks related to desiccation and wetting, freezing and thawing, or subsidence; or other features not discussed herein.

2.3.17 Odor

Odors should be described if unusual or organic. Soils containing sufficient amount of organic material usually have a distinctive odor. If the samples are dried, odor may be revived by wetting the sample. Appropriate personal protective equipment should be worn when making odor determinations and handling toxic materials.

2.4 Field Tests For Classifying Fines

Several tests can be performed in the field to help determine the plasticity and hence the assignment of a group name to a soil sample. These tests, which include the dilatancy test, soil thread test, toughness, dry strength, smear and stickiness, and the test tube test, are described below. Attachment 2-2 summarizes how the results of these tests can be used to determine the plasticity and field classification of fine-grained soils.

The use of all of these tests provides a more accurate determination of the fine-grained material present in a soil sample; however, some of these tests are time consuming and may not be practical in many field situations. At a minimum, the thread test and smear test should be performed. The dilatancy test should be performed whenever possible. If however, a number of borings are to be drilled through a fine-grained stratum, it may be advisable to perform all of the tests on a few selected representative samples of each distinct lithologic unit from different boring locations. The results can then be used as a benchmark for classification of samples collected throughout the field program.

2.4.1 Dilantancy Test

A dilatancy test is a method (ASTM D 2488) is used to identify fine-grained soils, in particular silts versus clays. Select a representative sample (approximately 0.5 cubic inch volume) and add water, if necessary, until the soil has a soft, but not sticky consistency. Form a pat of the wet soil in the palm of one hand and shake it horizontally, vigorously striking the side of the hand with the other hand several times. Alternately squeeze and release the pat of wet soil. Note the rate at which water appears while shaking and disappears while squeezing. Materials which are predominantly silt will show a dull-dry surface upon squeezing and a glassy-wet surface upon releasing the pressure and upon shaking or vibrating the pat. With increasing clay content this phenomenon becomes less pronounced due to lower mobility of pore water. Rapid reaction to the shaking test is typical for uniform fine sand and diatomaceous earth as well as for inorganic silts. Criteria for describing dilatancy are included in Attachment 2-3.

2.4.2 Soil Thread Test

Following completion of the dilatancy test, attempt to roll the test specimen into a thread between the palms or by hand on a smooth surface. Roll the sample into the smallest thread possible, adjusting the water content as needed. If the sample is too wet to roll easily, it should be spread into a thin layer and allowed to lose some water by evaporation. If it is too dry, add

water a few drops at a time, thoroughly kneading the soil to assure a uniform moisture content. Note the final minimum diameter attained before the thread breaks or crumbles.

The very fact that a soil can be rolled into threads indicates plasticity and the presence of clay. The smallest thread diameter possible without crumbling is indicative of the degree of plasticity. Refer to Attachment 2-2 for correlations between minimum thread diameter, plasticity, and appropriate soil descriptions.

2.4.3 Toughness

Fold the sample thread from the test above and re-roll the sample into a thread about 1/8 inch in diameter. Repeat this procedure until the thread crumbles at a diameter of approximately 1/8 inch. The thread will crumble at a diameter of 1/8 inch when the soil is near the plastic limit (the boundary between the plastic and semi-solid state). Note the strength of the thread and the pressure required to roll the thread near the plastic limit.

After the thread crumbles, lump the pieces together and knead the sample until the lump crumbles. Note the toughness of the material during kneading.

The higher the degree of plasticity of the soil, the stiffer are the threads as their water content approaches the plastic limit and the tougher are the lumps as the soil is remolded after rolling. The distinction in the toughness of the threads can only be felt at water contents close to the plastic limit. The greater the number of times the soil can be rolled prior to reaching the plastic limit for soils started at the same water content, the more plastic is the material. Cohesive soils containing significant amounts of organic material or mica form threads that are very soft or spongy near the plastic limit. The terminology for describing toughness is presented in Attachment 2-3.

2.4.4 Dry Strength

Mold the test sample to the consistency of putty, adding water if necessary. Shape the test specimen into a ball or angular fragment about 0.5 inches in diameter. Allow the sample to dry completely using air, sun, or oven, as long as the temperature does not exceed 60 degrees Centigrade. Test the strength of the fragment by crushing between the fingers. The dry strength increases with increasing plasticity. Occasionally the presence of high-strength water-soluble cementing materials such as calcium carbonate may cause exceptionally high dry strength. The presence of calcium carbonate can be detected with dilute hydrochloric acid. Silty fine sands and silts have about the same slight dry strength; however, they can be distinguished by the feel upon crushing. Fine sand feels gritty, whereas silt typically has the smooth feel of flour. Terminology for describing dry strength is presented in Attachment 2-3.

2.4.5 Smear and Stickiness

A high degree of stickiness and a very smooth smear in the natural state are indicative of high plasticity.

Although the primary basis for classification of fines is soil plasticity as discussed previously, the procedure described below for estimating the grain-size distribution of fine-grained soil components can also be helpful.

2.4.6 Test Tube Test

Silt and clay size particles may also be differentiated by determining their approximate settling rates in water. The settling rate may be measured in the field by shaking a small sample of the soil to be identified in a test tube or an 8-ounce clear glass jar filled with water and then allowing the particles to settle. The time required for particles to fall a distance of 4 inches is about 30 seconds for 0.074 mm size (the boundary between sand and silt) and about 50 minutes for particles 0.005 mm in size (the boundary between silt and clay). An approximate idea of the grain sizes present in a sample of fined-grained soil may be obtained by this method.

An additional aid in distinguishing silt and clay is by visual inspection under a hand lens. If grains are visible to indistinctly visible under 6.3x magnification, the sample is silt. If the sample has no visible grains under 6.3x magnification, then the sample is clay (Maher, 1964). Since most hand lenses are equipped with 10x magnification, this method is approximate as some clay grains may be indistinctly visible under 10x magnification.

The above tests are approximate and may not correlate precisely to results of laboratory grain size or mineralogical analyses. The tests do provide a method for consistent field classification, however.

This page intentionally blank.

3 PROCEDURES FOR LOGGING EXPLORATORY BORINGS

All drilling logs shall be prepared in the field, as borings are drilled, by a geologist. Each log shall be signed by the preparer. Entries shall be printed neatly in indelible ink. Printing should be dark enough for copying. As a general rule, abbreviations should not be used. When necessary, they should be kept to a minimum to avoid confusion. Abbreviations used should be defined on the log. All lines shall be drawn with a straight edge, not by free hand. Logs shall be prepared on an approved Hazardous and Toxic Waste (HTW) Drilling Log form. The log scale should be selected in advance to provide sufficient space for the detail required for a specific project; generally the log scale should be 1 inch equals 1 foot.

All general information blanks in the log heading shall be completed before drilling. If surveyed horizontal control is not available at the time of drilling, a location sketch with references to measured distances from prominent surface features shall be included on the back of the first page of the log. The borehole numbering system should be determined in advance to facilitate communications between field and office staff and avoid inconsistencies between final logs and field documentation. Logs shall include the total depth of penetration and sampling. The bottom of each boring shall be indicated by a straight solid double line extending completely across the page at the appropriate scale depth with the notation, "Bottom of Exploration at x feet," beneath the line. A note should be added to indicate the disposition of the borehole (e.g., "Note: Installed 2.0 inch Schedule 40 PVC monitoring well. Screened interval 21.6 to 30.6 ft. bls." or "Note: The borehole was abandoned by tremie-grouting from 25.0 ft. to the ground surface"). All borehole depth information shall be from direct measurements accurate to $1/10^{th}$ of a foot. Upon completion, all blanks in the log shall be completed. If information for a particular blank is not applicable to that boring, then an "NA" will be inserted.

3.1 Description of Surface Conditions

Each drilling log should include a description of surface conditions near the borehole location. This should include geomorphic position (e.g., ridgetop or swale), vegetative characteristics (e.g., Bermuda Grass), and proximity to potential sources of contaminants (e.g., 20 feet south of petroleum underground storage tank, adjacent to drainage ditch, etc.).

3.2 Documentation of Drilling Procedures and Performance

The manufacturer's designation of the drill rig should be recorded, including notation of the type of vehicle on which the drill is mounted (e.g., truck mounted or rubber tired all terrain vehicle). Sizes and types of drilling equipment used should be recorded on each boring log. This should include the diameters and lengths of samplers and other equipment. Depths at which drilling or sampling equipment are changed should also be included. The logs shall show depths and types of temporary casing used.

The behavior of drilling tools provides valuable information for interpreting geologic conditions and planning future drilling projects. This should include observations made by the driller or geologist. Occurrences such as changes in penetration rate and the degree of chattering of the bit provide indirect evidence of soil or sediment types and the depths of stratigraphic contacts. This information is particularly important when sample recoveries are low. Adjustments made to improve sample recovery should be noted. Any special drilling or sampling problems shall be recorded, including descriptions of problem resolutions. A good and continual rapport with the driller is essential to maximize the value of these indirect observations.

If drilling fluids are used, zones where significant amounts of drilling fluids are lost are important to note. This should include depths at which losses occur, the rate of loss, and an estimate of the total volume lost. Changes made to drilling fluid dynamics should also be included. Zones where circulation is entirely lost are of particular importance. When drilling fluids are used, the following information should be provided, as appropriate:

- Water source
- Drilling fluid additives by brand and product name
- Mixture proportions
- Type of compressor and filter for compressed air

It is also helpful to measure and record the fluid density (mud weight), viscosity, and percentage of suspended solids periodically when drilling fluids are used.

3.3 Sampling Data

Soil sampling data shall include the interval sampled, the type of sampler used, and the length of sample recovered for each sample collected. The interval over which sampling was attempted should always be recorded, even if no sample is retrieved. The logs shall also clearly show the depth interval retained. If a scheduled sampling interval was 2 feet in length (24-inch split spoon), and due to refusal, the total interval was not sampled, then the depth of penetration (e.g., 1.5 feet) becomes the sample interval. For example, if a planned sample interval was from 20 to 22 feet below land surface (bls) and the split-spoon was only advanced 1.2 feet, the recorded interval will be 20 to 21.2 feet bls. Horizontal lines should be drawn across the appropriate columns at the scaled depths to document sampling intervals. Sample type may be identified using sequential numbers with a prefix identifying the type of sampler used. Unless alternate notation is provided in an approved, site-specific work plan, the following nomenclature is recommended:

- S = Split-spoon
- T = Shelby™ Tube

- U = Undisturbed Tube Sampler
- C = Core Barrel
- CS = Continuous Sampler
- A = Auger (sample collected off auger flights)

The number of blow counts used to drive a split-spoon sampler should be recorded. Blow counts should be provided and recorded for each 0.5-foot interval driven during sampling. When possible, the geologist should count the blows rather than the driller. Do not apply more than 50 blows for each 0.5-foot interval. If less than 0.5 feet is penetrated after 50 blows, write the number of blows, slash (/), and the total length penetrated (e.g., 50/0.2 feet). Penetration should be recorded in tenths of feet.

3.4 Description of Soils and Unconsolidated Sediments

Inspection of samples should be augmented by careful observation of drill cuttings to provide as complete a description of subsurface conditions as possible. Unconsolidated soils and sediments should be described in accordance with the USCS and ASTM guidance. This nomenclature should also be used to describe rock materials effectively reduced to soil by weathering.

3.5 Stratigraphic Contacts and Lithologic Changes

Identifying stratigraphic contacts and lithologic changes is a field responsibility. Changes in the nature of subsurface materials should be identified by a horizontal line at the appropriate scaled depth. A solid horizontal line should be used to denote the depth of distinct lithologic changes. These changes may be identified directly from split-spoon samples or indirectly from drilling behavior (e.g., change in advancement rate of drill rods). If a contact is gradational or inferred between two consecutive but separated samples, a dashed line should be used. Inferred or gradational contacts should also be defined as such (e.g., write “inferred contact” or “gradational change”). If the actual depth between two separated samples is unknown, the contact line shall be drawn at half the distance between the samples.

3.6 Groundwater Observations

Boring logs shall identify the depth at which the geologic material is dry, moist, or wet. Record the depth to water observed in the borehole during and at the completion of drilling, and the stabilized depth to groundwater (whenever possible). Stabilized water level data shall include the time allowed for levels to stabilize. The absence of water in borings shall also be indicated. If a borehole is left open overnight, water level observations should be taken before leaving the site and before starting work the next day.

3.7 Environmental Field Measurements and Observations

Evidence of the presence of contaminants in samples or cuttings should be provided. Comments should describe any unusual discolorations, coatings (sheens), odors, or other potential evidence of contamination. The results of field headspace screening or other field screening test results should be included in the appropriate space in the boring log.

3.8 Borehole Stability

Logs shall identify any interval of borehole instability. Conditions such as running or heaving sands should be described, including the depths at which such conditions were encountered.

4 SOIL TEST BORINGS METHODS

Test borings will be completed using an appropriate procedure dictated by site-specific conditions and sampling requirements. Soil borings in unconsolidated sediments for collection of geologic samples will be drilled using hollow-stem augers, if possible, or mud-rotary techniques, if necessary, to maintain the integrity of open borehole. For test borings to be completed as groundwater monitoring wells, or where soil samples are to be chemically analyzed, the use of drilling fluid will be minimized to the extent possible.

Observations and notes of the complete drilling operation including, at a minimum, site-specific conditions, drilling rate/pressures, geologic sample depths/recoveries, assessment/classification of drill cuttings, and other pertinent drilling conditions encountered will be recorded on the HTW Drilling Log Form and in the Field Log Book. For contaminant investigations, all drilling equipment, split-spoons and soil sampling equipment will be steam-cleaned prior to site entry, between each borehole to be drilled, and prior to leaving the site.

Soil test boring procedures will be designed to ensure that contaminated groundwater does not enter contaminant-free geologic formations. If warranted, based on the potential for cross contamination, a large diameter borehole will be completed in the unit immediately above the lower (i.e., uncontaminated) formation. A shallow casing will be emplaced and the borehole will be grouted. After the grout has cured (minimum 24 hours) a smaller diameter inner borehole will be drilled through the shallow casing into the lower formation to the desired depth. In general, this type of well is known as a double cased well.

4.1 Hollow Stem Auger

Hollow-stem augering is the most common drilling method used in unconsolidated formations when the total depth of the borehole is less than 150 feet. Hollow-stem augers remove cuttings by a series of continuous flights which are welded onto large diameter pipe (2.5- to 12-inch inside diameter (ID)). A drill bit or cutter head is attached to the bottom auger and additional augers are added via an adapter cap at the top of each auger. A center stem of drill rods is connected to a drag bit at the bottom and commonly used as a plug to keep formation material from entering the auger flights. This interior assembly of drill rods can be removed to take relatively undisturbed soil samples or split-spoon samples from below the cutter head.

4.2 Mud Rotary Drilling

Mud rotary drilling techniques are typically used when drilling in areas of poorly consolidated sediments to prevent the borehole from caving when trying to reach depths unattainable by hollow-stem auger methods. In mud rotary drilling, a drilling fluid is pumped down drill rods through a bit that is attached to the lower end of the drill rods. The fluid circulates back to the surface by moving up the annular space between the drill rods and the borehole wall. The drilling fluid is used to stabilize the borehole and to provide a medium to transport the drill

cuttings out of the borehole. The use of the drilling fluid creates several disadvantages, including difficulty in removing the drilling fluid mud cake from the borehole wall and the alteration of the groundwater chemistry during the interaction with the drilling fluid.

Mud rotary drilling should only be utilized after careful consideration of its influence on the subsurface environment. Wash rotary drilling, using only potable water, is preferable. But if a mud drilling fluid must be used, it should be composed only of pure (no additives) bentonite drilling mud or an environmental drilling mud such as Revert™.

If a deep borehole that requires drilling through contaminated units is planned, drilling mud, if used, will be replaced with new mud immediately before the lower unit is penetrated to preclude contamination in overlying formations from entering the lower and possibly uncontaminated formation.

4.3 Air Rotary Drilling

Air rotary drilling is generally conducted in semi-consolidated or consolidated materials. Methods of air rotary drilling are similar to those of mud rotary except that, instead of the drilling mud, compressed air is forced down the drill pipe and up the borehole annulus to remove cuttings. Potable water is sometimes added to control dust. Foam, although sometimes used for this purpose in the water well industry, is not acceptable for environmental applications. The absence of drilling mud minimizes the risk of introducing contaminants into the aquifer.

When using air rotary, the air compressor will have an in-line organic filter system to filter the air coming from the compressor. The organic filter system will be regularly inspected to ensure that the system is functioning properly. Air compressors that do not have in-line organic filter systems are not acceptable for air rotary drilling. A cyclone velocity dissipater or similar air containment system will also be used to funnel the cuttings to one location instead of letting the cuttings blow uncontrolled out of the borehole. The conventional air rotary method does not control cuttings blowing out of the borehole and is unacceptable. Air rotary that employs the dual-tube (reverse circulation) drilling system is acceptable since the cuttings are contained in the drill stems and blown to the surface through the cyclone velocity dissipater and can be directed to the point of discharge.

4.4 Rotasonic Drilling

Rotasonic drilling utilizes ultrasonic vibrations to advance a core pipe to the target depth. Drill cuttings are captured in the core pipe; minimal wastes or drill cuttings are produced outside the borehole. Drilling rates using rotasonic drilling are much faster than drilling rates using mud rotary or auger techniques, and well development water typically clears up faster than from mud rotary boreholes.

A sonic drill rig advances a 4-inch to 12-inch diameter core barrel for sampling first. Upon reaching the desired depth or the end of the stroke, an outer casing is advanced to the same depth. Then the core barrel and rods are removed. The core is displaced from the core barrel by using a low vibration and is contained in a clear plastic tube. The core tube is then placed in a trough for examination, logging, and sampling.

Once the core is removed from the barrel, the core barrel and rods are lowered to the bottom of the hole. Another rod is added and the system is ready to advance again. The outer casing prevents cross contamination and formation mixing and allows for controlled placement of well installation materials.

4.5 Direct Push Technology (DPT) Sampling

The DPT rig uses a hammered hydraulic drive unit, a stainless steel sampling point, and a sampling rod to collect samples. The hydraulic drive unit is first positioned at the proposed boring location. A hydraulic percussion hammer is then used to drive a 1.3- or 2.25-inch outside diameter core barrel to the target depth. The nose piston is then retracted, allowing soil to enter the core barrel, the sampler is then hydraulically driven and filled. The sampler is a stainless steel tube that contains an inner Teflon or acetate sleeve. The rod and sampler is then retrieved hydraulically and the sleeve containing the soil sample is removed from the sampler. The sleeve is split open to retrieve the sample. This method is very useful in collecting discrete intervals and reduces occurrence of cross contamination. Generally DPT is also much faster then augering and does not produce cuttings that need to be managed.

This page intentionally blank.

5 SURFACE SOIL SAMPLING PROCEDURES

For samples collected from land surface to 1 foot bls, the following procedure, using a stainless steel hand auger, will be adhered to:

1. Clean and decontaminate soil sampling equipment in a consistent manner, as specified in BSOP No. 13.

2. Carefully remove the top layer of soil to the desired sample depth interval with a pre-cleaned hand auger.

3. Using the same stainless steel auger itself, or a pre-cleaned stainless steel spoon, transfer an adequate volume of sample for the chosen analytical technique into a pre-cleaned mixing bowl. The preferential order of sample collection is VOCs with an Encore™ sampler, headspace screening sample (which can also be used for geotechnical purposes), SVOCs, polychlorinated biphenyls (PCBs)/pesticides, and metals. If the sample is to be composited, the quartering method will be used, as described below. If the sample is composited from several subsamples, a subsample aliquot or an Encore™ sample will immediately be collected from each subsample location for potential VOCs analysis. A headspace screening sample will also be collected at each subsample location. The VOC sample to be analyzed for the composited area will be selected from the subsample aliquots based on the relatively high subsample headspace screening results. The collection of SVOCs, PCBs/pesticides, and metals samples will be collected from the composited sample.

4. It is important that soil samples be mixed as thoroughly as possible to ensure that the sample is representative. The most common method of mixing is referred to as quartering. The soil in the sample pan is divided into quarters. Each quarter is mixed, then all quarters are mixed into the center of the pan. This procedure is followed several times until the sample is adequately mixed. If round bowls are used for sample mixing, adequate mixing is achieved by stirring the material in a circular fashion and occasionally turning the material over. The sample containers should be filled completely; no head space should remain in the sample containers.

5. Visually check to ensure that a Teflon liner is present in the cap (if required). Secure the cap tightly.

6. Immediately after the sample is collected, label the sample containers.

7. If no map of the sampling locations is available prior to sampling, a simple drawing of the site (not necessarily to scale) will be included in the field log book to provide an illustration of all sampling points.

8. A Chain-of-Custody Form will be completed to maintain an accurate record of sample collection, transport, analysis, and disposal.

9. Decontaminate equipment between each soil sampling location and after each sampling event.

10. Discard contaminated personal protective clothing (e.g., gloves and Tyveks).

6 SUBSURFACE SOIL SAMPLING PROCEDURES

The following procedure will be used for soil samples collected from greater than 1 foot bls. The subsurface soils will be obtained by manually advancing stainless steel hand augers, driving standard split-spoon samplers, pressing or driving thin-wall tubes (Shelby™ tubes), or by continuous coring, in accordance with approved procedures.

Collection of soil samples from the subsurface requires the use of a variety of pieces of equipment. To minimize the risk of cross-contamination between discrete sampling intervals the following procedures will be followed.

6.1 Sampling with a Hand Auger

Hand augering is a common method used to collect shallow subsurface soil samples, defined as those samples collected from depths of 1 foot bls to a site-specific depth where sample collection using manual methods becomes impractical.

Before beginning to advance the hand auger boring, vegetation and any surface debris shall be cleared from the immediate vicinity of the boring. When collecting a shallow subsurface soil sample from a discrete depth interval, the hand auger boring will be advanced to a depth immediately above the desired soil sampling interval. A new, cleaned hand auger bucket will then be installed onto the hand auger rods to prevent cross contamination, and the soil sample will be retrieved to the surface. The top several inches should be removed from the upper part of the bucket to minimize the chances of cross contamination by fall-in material from the shallower parts of the borehole. If the sample from the boring is to be a vertical composite of all of the intervals, then the same hand auger bucket can be used for the entire extent of the boring.

6.2 Sampling with a Split-Spoon

If split-spoon sampling is used to obtain soil samples, the samples will be collected as specified in ASTM D 1586 using a stainless steel split-spoon sampler. Each split-spoon sample will be taken according to the following procedures:

1. Decontaminate sampler as specified in BSOP No. 13.

2. Advance the drill string to the desired sampling depth by one of the drilling methods described in, Section 4.

3. Carefully measure the length of the split-spoon sampler, drill rods, subsidiary attachments, and drill bit to ensure that the sample is collected from the designated interval.

4. Attach the split-spoon sampler to the drill rods and lower the sampler to the bottom of the borehole without penetrating undisturbed soil or sediments.

5. Attach the hammer to the drill rods. If excessive drill cuttings are encountered, remove the drill rods and sampler and clean the borehole.

6. Mark the drill rods in 6-inch increments (24 inches total) prior to driving the split-spoon sampler.

7. The 2-inch outside diameter (OD) sampler is driven with a 140-pound hammer, or a 3-inch OD sampler is driven with a 300-pound hammer. Both hammer weights will fall 30 inches. The field personnel shall record the number of blows required to penetrate every 6 inches. The first 6-inch increment is considered the seating blow, the second and third are totaled to obtain the N-value, and the last 6-inch blow is recorded but means little.

8. After the sampler has been driven 24 inches, or to refusal, remove the sampler from the borehole and place it on a clean surface (for example, foil or plastic) when sampling for analytical parameters. Open the sampler, discard slough materials, record the length of remaining sample recovered, and describe the sample as specified in Section 2.

9. Sample aliquots will be removed from the split-spoon sampler using an Encore™ sampler (for VOCs), and a decontaminated stainless steel spoon (for all other analyses). The parts of the split spoon sample intended for VOC analysis will immediately be sampled with an Encore™ sampler, and the part for headspace screening techniques will be immediately transferred to appropriate sample containers. The remaining parts of the sample intended for other laboratory analyses, such as SVOCs, Pesticides, or PCBs, will be homogenized in a cleaned stainless steel bowl, as described in Section 5. The preferential order of sample collection is VOCs, headspace screening sample (which can be used for geotechnical purposes), SVOCs, PCBs/pesticides, and metals. Handling of soil samples to transfer the soil to the sample container should be minimized, using only properly decontaminated sampling equipment. If the sample must be handled by hand, the nitrile gloves should be worn.

10. Immediately after the sample is collected, label the sample containers per procedures defined in BSOP No. 4.

11. If no map of the sampling locations is available prior to sampling, a simple drawing of the site (not necessarily to scale; but provide distances between important locations) will be included in the field logbook to provide an illustration of all sampling points. Refer to BSOP No. 3 for field documentation procedures.

12. A Chain-of-Custody Form will be completed to maintain an accurate record of sample collection, transport, analysis, and disposal. Refer to BSOP No. 4 for Chain-of-Custody labeling procedures.

13. Decontaminate equipment after each sampling event as described in BSOP No. 13.

14. Discard contaminated personal protective clothing (e.g., gloves and tyveks).

15. All samples will be handled and packaged in accordance with the procedures specified in BSOP No. 4.

6.3 Shelby™ Tube Sampling

Undisturbed soil samples for geotechnical analyses will be obtained as specified in ASTM D 1587, which describes the methodology for thin walled tube soil sampling. The undisturbed sample is collected in 36-inch long, 3-inch OD, 16-gauge, steel tubing known as a Shelby™ tube sampler. The sampler is attached to the drill rods and pushed into the bottom of the borehole in one continuous motion. The sampler is then withdrawn and carefully stored and shipped to the laboratory performing the analysis. Collection of soil samples with a Shelby™ tube will follow the following procedures:

1. Carefully measure the sampler tube, sampler head, drill rods, drill bit, and subs to ensure accurate depths are maintained throughout all phases of drilling and sampling.

2. Advance the drill string to the desired sampling depth by a drilling method described in Section 5.

3. Connect the tube to the drill rods and rest the bottom of the tube at the bottom of the borehole.

4. Mark the drill rods in 1-foot increments (3 feet total) prior to pushing the Shelby™ tube and record the maximum amount of pressure exerted during the push.

5. Advance the sampler in a continuous motion without rotating and record the length of penetration.

6. Carefully withdraw the Shelby™ tube from the borehole. Attempt to minimize disturbances which may dislodge some of the sample.

7. After removing the tube, measure the amount of sample recovered. If Shelby™ tubes are not successful in collecting samples, split-spoons or other options will be used to collect disturbed soil samples.

8. Remove 0.5 inches of soil from each end with a stainless steel spatula or putty knife, and level the sample surface within the tube. Be sure that any cuttings or slough have been removed from the sides of the Shelby™ tube.

9. The space at each tube end should now be filled with hot paraffin or wax, expandable packers, Teflon plugs, or stainless steel plugs.

10. After an air tight seal has been set, fill any remaining void space with clean sand or paper.

11. Close the tube ends with metal or plastic caps and securely tape the caps to the tube with duct tape. If it is considered necessary to ensure the seal on the tube, the sample collector may dip the taped ends of the tube in hot wax to complete the sealing process.

12. Label the top foot of the tube in indelible ink. Information on the tube should include "TOP" and "BOTTOM" references, the project number, project name, date sample collected, boring number, sample number, and sample depth interval.

13. Tubes should be stored and transported upright in a vertical position to minimize disturbance to the sample. The tube will be transported to a designated soils laboratory for analysis. Tubes will be stored and shipped in padded boxes.

7 TEST PIT AND TRENCHING PROCEDURES

Following are the general procedures that apply to the excavation of the test pit or trench and collection of soil samples from these structures.

7.1 Excavation

1. Relative to the intended purpose and data requirements, determine the general location of the test pit or trench with topographic maps or site plans. Determine the appropriate depth of the test pit or trench.

2. The test pit or trench walls should be cut as near vertical as possible to facilitate the interpretation of the subsurface lithologic information and to ensure that the soil samples are being collected from the designated sample interval. The test pits or trenches will be excavated in compliance with applicable safety regulations, including the consideration of both physical and chemical hazards.

3. When necessary to determine the boulder content of test pits or trenches, the boulders will be separated from the soil matrix, measured and counted, and the data recorded.

4. The geologist will record the width, length and depth of the excavation in the field log book and a description of the type and depth of the lithologies and features encountered within the excavation. The geologist will describe any subsurface disposed material that may be in exposed in the test pit. These descriptions will be recorded in a form similar to that illustrated in Attachment 7-1, Test Pit Report. Photographs will be taken of the test pits and any material that may be exposed.

5. After documenting the contents of the test pits and collecting any soil samples, the test pit will be backfilled to original grade with the same material that was excavated and compacted according to contract specifications. If subsurface material was exposed but not removed from the pit, then efforts will be made to restore the surface to its former condition. For example, a layer of clay may need to be applied to the surface of the restored test pit to prevent subsurface material from migrating to the surface via preferential erosion.

Once the designated depth of the test pit or trench has been achieved, soil samples will be collected from either the sidewalls or bottom of the excavation. Following are the procedures for collecting soil samples from the excavation:

7.2 Collection of Soil Samples

1. If it is safe to enter the excavation (walls are stable and excavation is less than 4 feet in depth), collect the designated samples from the bottom and/or sidewall of the excavation with a stainless steel spoon or stainless steel hand auger. **In no instance, should a worker enter an excavation, if it is determined to be unsafe, or without proper supervision.**

2. If an excavation is considered a confined space (i.e., large enough for a worker to enter, limited openings for entry and exit, unfavorable natural ventilation, and not designed for continuous worker occupancy) it is not considered safe to enter. If this is the case, collect the sample material from the bucket of the backhoe. If the backhoe bucket is used to retrieve a sample for chemical analyses (field screening or laboratory analyses), the bucket will be steam cleaned prior to collection of the sample. All samples will be collected, as practicable, from soils that have not come into contact with the blade or sides of the bucket (i.e., from soil at the top of the load). The latter method is appropriate for the collection of bulk samples such as may be used in treatability study sampling or for general characterization purposes.

3. When an adequate volume of material has been collected from the sample point or the backhoe bucket, use a stainless-steel spoon to fill the appropriate bottles.

4. Immediately after the sample is collected, label the sample containers in accordance with the procedures defined in BSOP No. 4.

5. If no map of the sampling locations is available prior to sampling, a simple drawing of the locations of the excavation (not necessarily to scale) will be included in the field log book to provide an illustration of all sampling points. Refer to BSOP No. 3 for field documentation procedures.

6. A Chain-of-Custody Form will be completed to maintain an accurate record of sample collection, transport, analysis, and disposal. Refer to BSOP No. 4 for Chain-of-Custody labeling procedures.

7. Decontaminate equipment after each sample as described in BSOP No. 13.

8. Discard contaminated personal protective clothing (e.g., gloves, and Tyveks).

9. Place sample in cooler immediately. Once the cooler is filled with samples, it will be taped and secured in a sampling vehicle or other secure storage facility until the completion of the day's sampling activities. All samples will be packaged in a manner consistent with the procedures outlined in BSOP No. 4.

10. The test pit or trench will be backfilled to original grade and compacted.

8 REFERENCES

American Society for Testing and Materials, *Standard Test Method for Penetration Test and Split-Barrel Sampling of Soils*, ASTM Designation: D 1586-8, 1984 (Reapproved 1992).

American Society for Testing and Materials, *Standard Classification of Soils for Engineering Purposes (Unified Soil Classification System)*, ASTM Designation: D2487-00, 2000.

American Society for Testing and Materials, *Standard Practice for Description and Identification of Soils (Visual-Manual Procedure)*, ASTM Designation: D 2488-00, 2000.

Buckman, H.O. and Brady, N.C., *The Nature and Properties of Soils*, 1969.

Travis, R.B., *Classification of Rocks*, Colorado School of Mines Quarterly, Vol. 50, Number 1, 1955.

U.S. Environmental Protection Agency, *Description and Sampling of Contaminated Soils*: A Field Pocket Guide, 1991.

U.S. Environmental Protection Agency (EPA) Region 4, *Environmental Investigations Standard Operating Procedures and Quality Assurance Manual*, Environmental Services Division, May 1996.

This page intentionally blank.

ATTACHMENT 1-1

HTW DRILLING LOG

HTW DRILLING LOG

		HOLE NO.
1. COMPANY NAME	2. DRILLING CONTRACTOR	SHEET OF SHEETS
3. PROJECT	4. LOCATION	
5. NAME OF DRILLER	6. MANUFACTURER'S DESIGNATION OF DRILL	
7. SIZES & TYPES OF DRILLING & SAMPLING EQUIPMENT	8. HOLE LOCATION North East	
	9. SURFACE ELEVATION (ft. NGVD)	
	10. DATE STARTED	11. DATE COMPLETED
12. OVERBURDEN THICKNESS	15. DEPTH GROUNDWATER ENCOUNTERED	
13. DEPTH DRILLED INTO ROCK	16. DEPTH TO WATER AND ELAPSED TIME AFTER DRILLING COMPLETED	
14. TOTAL DEPTH OF HOLE	17. OTHER WATER LEVEL MEASUREMENTS (SPECIFY)	

18. GEOTECHNICAL SAMPLES	DISTURBED	UNDISTURBED	19. TOTAL NUMBER OF CORE BOXES

20. SAMPLES FOR CHEMICAL ANALYSIS	VOC	METALS	OTHER (SPECIFY)	OTHER (SPECIFY)	OTHER (SPECIFY)	21. TOTAL CORE REC %

22. DISPOSITION OF HOLE	BACKFILLED	MONITORING WELL	OTHER (SPECIFY)	23. SIGNATURE OF INSPECTOR

ELEV. a	DEPTH b	DESCRIPTION OF MATERIALS c	Field Screening Results d	Geotech Sample or Core Box No. e	Analytical Sample No. f	Blow Counts g	REMARKS h
	0						
	1						
	2						
	3						
	4						
	5						

PROJECT	HOLE NO.

HTW DRILLING LOG

HOLE NO.

PROJECT	INSPECTOR	SHEET OF SHEETS

ELEV. a	DEPTH b	DESCRIPTION OF MATERIALS c	Field Screening Results d	Geotech Sample or Core Box No. e	Analytical Sample No. f	Blow Counts g	REMARKS h
	5						
	6						
	7						
	8						
	9						
	10						
	11						
	12						
	13						
	14						

PROJECT	HOLE NO.

HTW DRILLING LOG

HOLE NO.

PROJECT	INSPECTOR	SHEET OF SHEETS

ELEV. a	DEPTH b	DESCRIPTION OF MATERIALS c	Field Screening Results d	Geotech Sample or Core Box No. e	Analytical Sample No. f	Blow Counts g	REMARKS h
	14						
	15						
	16						
	17						
	18						
	19						
	20						
	21						
	22						

PROJECT	HOLE NO.

ATTACHMENT 2-1

DEFINITIONS OF SOIL COMPONENTS AND FRACTIONS

ATTACHMENT 2-1
DEFINITIONS OF SOIL COMPONENTS AND FRACTIONS

Soil Component	Definition	Fractions	Sieve Limits* (Grain Size Range)	
			Upper	Lower
Boulder	Material too large to pass through an opening 12-inch square	-	-	12 in.
Cobbles	Material passing through	-	12 in.	3 in.
Gravel	Material passing the 3-inch sieve and retained on the No. 4 sieve	Coarse Fine	3 in. 3/4 in.	3/4 in. No. 4 (4.76 mm)
Sand	Material passing the No. 4 sieve and retained on the No. 200 sieve	Coarse Medium Fine	No. 4 (4.76 mm) No. 10 (2.0 mm) No. 40 (0.42 mm)	No. 10 (2.00 mm) No. 40 (0.42 mm) No. 200 (0.074 mm)
Silt	Material passing the No. 200 sieve that is non-plastic or very slightly plastic and exhibits little or no strength	-	No. 200 (0.074 mm)	-
Clay	Material passing the No. 200 sieve that can be made to exhibit plasticity within a range of water contents and which exhibits considerable strength when air dried			

A particular size graph is available as AGI Data Sheet 16.1 (American Geological Institute, 1982)
* U.S. Bureau of Standards

ATTACHMENT 2-2

CRITERIA FOR ESTIMATING PLASTICITY AND FIELD CLASSIFICATION OF FINE-GRAINED SOIL

ATTACHMENT 2-2
CRITERIA FOR ESTIMATING PLASTICITY AND FIELD CLASSIFICATION OF FINE-GRAINED SOILS

Plasticity Designation	Results of Visual/Manual Classification Tests[3]					USCS* Group Symbols	Typical USCS Group Names
	Dilatancy (reaction to shaking)	Soil Thread Test (smallest thread that can be rolled in inches)	Toughness[5] (consistency near plastic limit)	Dry Strength (crushing characteristics)	Smear		
Non-Plastic	Rapid[4]	No threads can be rolled	Thread cannot be rolled	None	None	ML	Silt
Slightly Plastic	Rapid to Medium	1/4 → 1/8	Low	Low	Dull	ML	Silt
						OL	Organic Silt
Low Plasticity	Medium to Slow	1/8 → 1/16	Low to Medium	Low to Medium	Dull to Slightly Shiny	OL	Organic Silty Clay
						MH	Organic Clayey Silt
						CL	Clayey Silt, Elastic Silt Silty Clay
Medium Plasticity	Slow	1/32	Medium	Medium to High	Slightly Shiny to Shiny	CL	Silty Clay
						MH	Lean Clay
						OH, CH	Organic Clay
Highly Plastic	None	1/64	High	High[7]	Shiny	CH	Fat Clay

Notes:
1. Based on ASTM 2488, the Unified Soil Classification System* and D.M. Burmister
2. See Attachment 2-3 for definitions of terminology used for test results.
3. Plasticity designations are defined by the visual/manual test results.
4. Rapid reaction to the dilatancy test is also characteristic of uniform fine sands and diatomaceous earth.
5. Cohesive soils containing organic material or much mica form threads that are very soft or spongy near the plastic limit.
6. Dry strength may be significantly diminished by the presence of fine sand or organic material. Organic clay may exhibit only low dry strength.
7. High dry strength may result from the presence of water soluble cementing agents such as calcium carbonate or iron or manganese oxides.
8. Organic silts typically display only slow dilatancy.

ATTACHMENT 2-3

VISUAL/MANUAL CLASSIFICATION TEST TERMINOLOGY

ATTACHMENT 2-3
VISUAL/MANUAL CLASSIFICATION TEST TERMINOLOGY

Description	Criteria
Criteria for Describing Dilatancy	
None	No visible change in the specimen
Slow	Water appears slowly on the surface of the specimen during shaking and does not disappear or disappears slowly upon squeezing.
Medium	Water appears at a moderate rate on the surface of the specimen during shaking and disappears relatively slowly upon squeezing.
Rapid	Water appears quickly on the surface of the specimen during shaking and disappears quickly upon squeezing.
Criteria for Describing Toughness	
Low	Only slight pressure is required to roll the thread near the plastic limit. The thread and the lump are weak and soft.
Medium	Medium pressure is required to roll the thread near the plastic limit. The thread and the lump have medium stiffness.
High	Considerable pressure is required to roll the thread near the plastic limit. The thread and the lump have very high stiffness.
Criteria for Describing Dry Strength	
None	The dry specimen crumbles into powder with mere pressure of handling.
Low	The dry specimen breaks into pieces or crumbles with considerable finger pressure.
Medium	The dry specimen breaks into pieces or crumbles with considerable finger pressure.
High	The dry specimen cannot be broken with finger pressure. Specimen will break into pieces between thumb and a hard surface.
Very High	The dry specimen cannot be broken between the thumb and a hard surface.

ATTACHMENT 2-4

ASTM FLOW CHART FOR IDENTIFYING SOILS

ATTACHMENT 2-4
ASTM FLOW CHARTS FOR IDENTIFYING SOILS

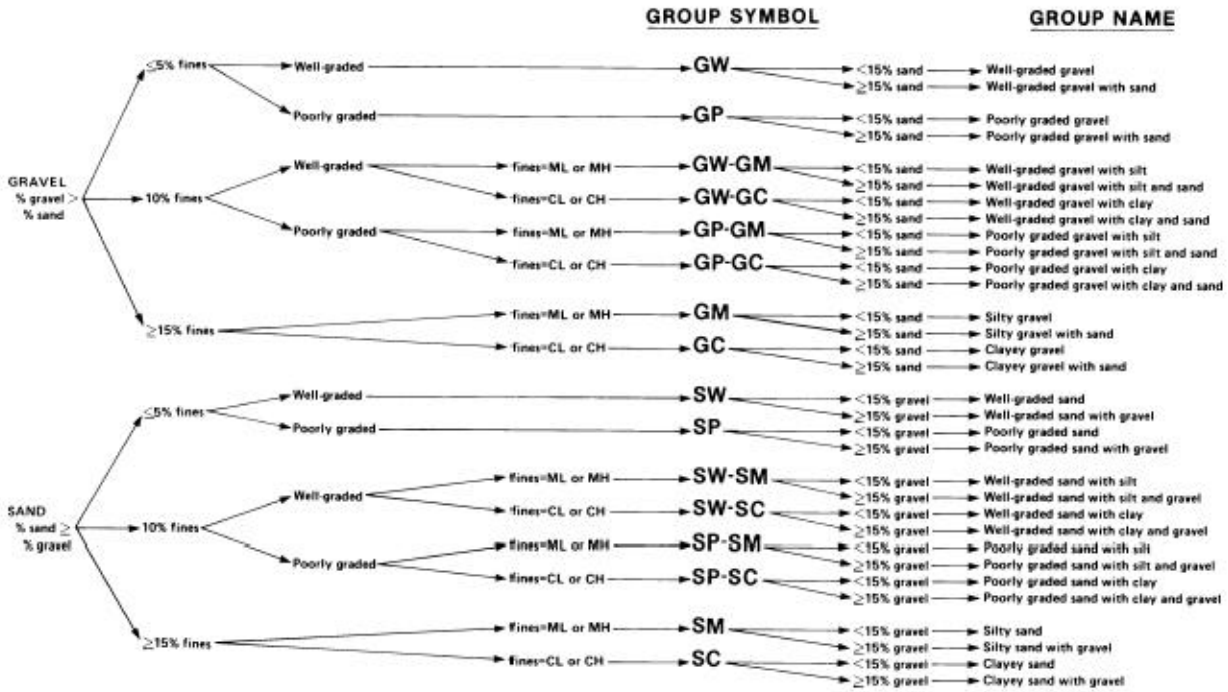

NOTE 1—Percentages are based on estimating amounts of fines, sand, and gravel to the nearest 5 %.

FIG. 2 Flow Chart for Identifying Coarse-Grained Soils (less than 50 % fines)

ATTACHMENT 2-4 (CONT'D)
FLOW CHART FOR IDENTIFYING INORGANIC FINE-GRAINED SOIL

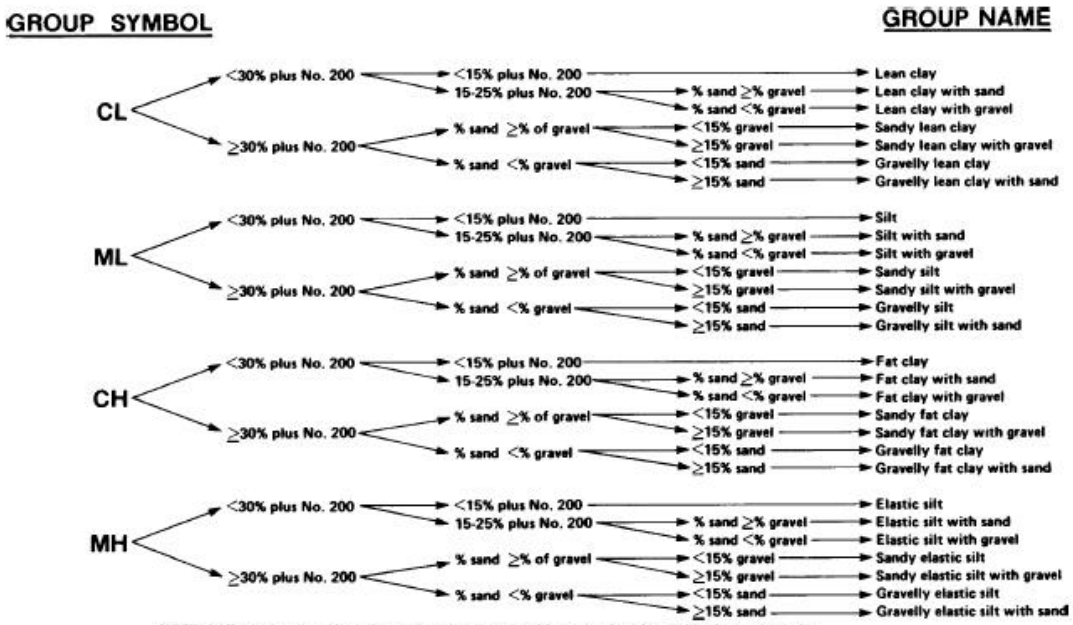

NOTE 1—Percentages are based on estimating amounts of fines, sand, and gravel to the nearest 5 %.

FIG. 1a Flow Chart for Identifying Inorganic Fine-Grained Soil (50 % or more fines)

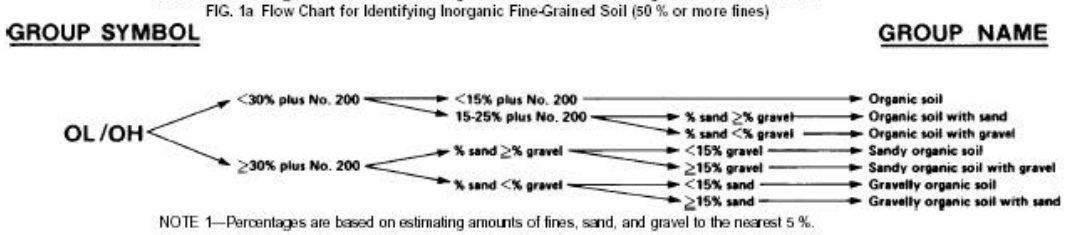

NOTE 1—Percentages are based on estimating amounts of fines, sand, and gravel to the nearest 5 %.

ATTACHMENT 2-5

PRINCIPAL SOIL DEPOSITS

ATTACHMENT 2-5
PRINCIPAL SOIL DEPOSITS

Major Division	Principal Soil Deposits	Pertinent Engineering Characteristics
Transported Soils		
Alluvial		
Material transported and deposited by running water	Floodplain Deposits: Deposits laid down by a stream within that portion of its valley subject to inundation by floodwaters.	
	Point Bar: Alternating deposits of arcuate ridges and swales (lows) formed on the inside of convex bank of migrating river bends. Ridge deposits consist primarily of silt and sand, swales are clay-filled	Generally favorable foundation conditions; however, detailed investigations are necessary to locate discontinuities. Flow slides may be a problem along river-banks. Soils are quite pervious.
	Channel Fill: Deposits laid down in abandoned meander loops isolated when rivers shorten their course. Composed primarily of clay; however, silty and sandy soils are found at the upstream and downstream ends.	Fine-grained soils are usually compressible. Portions may be very heterogeneous. Silty soils generally present favorable foundation conditions.
	Backswamp: The prolonged accumulation of floodwater sediments in flood basins bordering a river. Materials are generally clays but tend to become more silty near riverbanks.	Relatively uniform in a horizontal direction. Clays are usually subjected to seasonal volume changes.
	Alluvial Terrace Deposits: Relatively narrow, flat-surfaced, river-flanking remnants of floodplain deposits formed by entrenchment of river and associated processes.	Usually drained, oxidized. Generally favorable foundation conditions.
Materials	Estuarine Deposits: Mixed deposits of marine and alluvial origin laid down in widened channels at mouths of rivers and influenced by tide of body of water into which they are deposited.	Generally fine-grained and compressible. Many local variations in soil conditions.
	Alluvial-Lacustrine Deposits: Material deposited within lakes (other than those associated with glaciation) by waves, currents, and organo-chemical processes. Deposits consist of unstratified organic clay or clay in central portions of the lake and typically grade to stratified silts and sands in peripheral zones.	Usually very uniform in horizontal direction. Fine-grained soils generally compressible.
	Deltaic Deposits: Deposits formed at the mouths of rivers which result in extension of the shoreline.	Generally fine-grained and compressible. Many local variations in soil condition.
	Piedmont Deposits: Alluvial deposits at foot of hills or mountains. Extensive plains or alluvial fans.	Generally favorable foundation conditions.

ATTACHMENT 2-5 (CONT'D)
PRINCIPAL SOIL DEPOSITS

Major Division	Principal Soil Deposits	Pertinent Engineering Characteristics
Aeolian		
Material	Loess: A calcarious, unstratified deposit of silts or sandy of clayey silt traversed by a network of tubes formed by root fibers now decayed.	Relatively uniform deposits characterized by ability to stand in vertical cuts. Collapsible structure. Deep weathering or saturation can modify characteristics.
	Dune Sands: Mounds, ridges, and hills of uniform fine sand characteristically exhibiting rounded grains.	Very uniform grain size; may exist in relatively loose condition.
Colluvial		
Material	Talus: Deposits created by gradual accumulation of unsorted rock fragments and debris at base of cliffs.	Previous movement indicates possible future difficulties. Generally unstable foundation conditions.
	Hillwash: Fine colluvium consisting of clayey sand, sand silt, or clay.	
	Landslide Deposits: Considerable masses of soil or rock that have slopped down, more or less as units, from their former position on steep slopes.	
Pyroclastic		
Material	Ejecta: Loose deposits of volcanic ash, lapilli, bombs, etc.	Typically shardlike particles of silt size with larger volcanic debris. Weathering and redeposition produce highly plastic, compressible clay. Unusual and difficult foundation conditions.
	Pumice: Frequently associated with lava flows and mud flows, or may be mixed with nonvolcanic sediments.	
Glacial		
Material	Glacial Till: An accumulation of debris, deposited beneath, at the side (lateral moraines), or at the lower limit of a glacier (terminal moraine). Material lowered to ground surface in an irregular sheet by a melting glacier is known as a ground moraine.	Consists of material of all sizes in various proportions from boulders and gravel to clay. Deposits are unstratified. Generally present favorable foundation conditions; but, rapid changes in conditions are common.

ATTACHMENT 2-5 (CONT'D)
PRINCIPAL SOIL DEPOSITS

Major Division	Principal Soil Deposits	Pertinent Engineering Characteristics
Material (cont'd)	Glacio-Fluvial Deposits: Coarse and fine-grained material deposited by streams of meltwater from glaciers. Material deposited on ground surface beyond terminal of glacier is known as an outwash plain. Gravel ridges know as kames and eskers.	Many local variations. Generally present favorable foundation conditions.
	Glacio-Lacustrine Deposits: Material deposited within lakes by meltwater from glaciers. Consisting of clay in central portions of lake and alternate layers of silty clay or silt and clay (varved clay) in peripheral zones.	Very uniform in a horizontal direction.
Marine		
Material transported and deposited by ocean waves and currents in shore and offshore areas	Shore Deposits: Deposits of sands and/or gravels formed by the transporting, destructive, and sorting actions of waves on the shoreline.	Relatively uniform and of moderate to high density.
	Marine Clays: Organic and inorganic shore and deposits of fine-grained material offshore areas.	Generally very uniform in composition. Compressible and usually very sensitive to remolding.
Sedimentary Soils		
Residual		
Material formed by disintegration of underlying parent rock or partially indurated material.	Residual sands and fragments of gravel size formed by solution and leaching of cementing material, leaving the more resistant particles; commonly quartz.	Generally favorable foundation conditions.
	Residual clays formed by decomposition of silicate rocks, disintegration of shales, and solution of carbonates in limestone. With few exceptions becomes more compact, rockier, and less weathered with increasing depth. At intermediate stage, may reflect composition, structure and stratification of parent rock.	Variable properties requiring detailed investigation. Deposits present favorable foundation conditions except in humid and tropical climates, where depth and rate of weathering are very great.
Organic		
Accumulation of highly organic material formed in place by the growth and subsequent decay of plant life.	Peat: A somewhat fibrous aggregate of decayed and decaying vegetation matter having a dark color and odor of decay.	Very compressible. Entirely unsuitable for supporting building foundations.

ATTACHMENT 7-1

TEST PIT REPORT

TEST PIT REPORT

TEST PIT NO. _____

Project:		**Job Number:**	
Location:		**Elevation:**	
		Date Start:	
Client:		**Date End:**	
Contractor:		**Field Representative:**	
Equipment:			

Depth (Feet)	Sample Number and Depth Range	Strata Change (feet)	Field Classification	Remarks
0				
2				
4				
6				
8				
10				
12				ASTM Component % Mostly 50 – 100% Some 30 – 45% Little 15 – 25% Few 5 – 10% Trace <5%
14				

Groundwater

Date	Time*	Depth (ft)

Pit Dimensions (feet)

_____X_____X_____=_____ cubic feet
Length Width Depth

Boulders

12 to 18-inch diameter: No, _____ = _____cubic feet

Over 18-inch diameter: No._____= _____cubic feet

Not Encountered

***Hours after completion**

Test Pit No.

TEST PIT REPORT

TEST PIT NO. 9

Project:	Contamination Assessment	**Job Number:**	9010022
Location:	IRP Site No. LF-266 Mills Dump Site/Encroachment Landfill	**Elevation:**	N/A
		Date Start:	21-Mar-2000
Client:	USACE – Omaha District	**Date End:**	21-Mar-2000
Contractor:	Southern Waste Services	**Field Representative:**	B. Jackson
Equipment:	John Deer 690 ELC Excavator		

Depth (Feet)	Sample Number and Depth Range	Strata Change (feet)	Field Classification	Remarks
0 2 4 6 8 10			Light brown sand. Two automobile fuel tanks, metal soda cans. Few areas of household garbage, automobile drive shaft. Appears most of the material on the northern end of the pit is confined to top 4.0 feet. On the southern ed is vinyl siding, refrigerator, fiberglass truck cab.	
12 14			Light brown clay at 12.0 feet bls. No debris observed.	ASTM Component % Mostly 50 – 100% Some 30 – 45% Little 15 – 25% Few 5 – 10% Trace <5%

Groundwater

Date	Time*	Depth (ft)

Pit Dimensions (feet)

_____X_____X_____=_____ cubic feet
Length Width Depth

Boulders

12 to 18-inch diameter: No, _____ = _____cubic feet

Over 18-inch diameter: No._____= _____cubic feet

Not Encountered

***Hours after completion**

Test Pit No. 9

BHATE STANDARD OPERATING PROCEDURE NO. 10

SUBSURFACE WATER INVESTIGATION

The objective of this Bhate Standard Operating Procedure (BSOP) document is to describe Bhate's policies and procedural guidelines for the design, installation, and construction of piezometers and groundwater monitoring wells to be completed in unconsolidated portions of water-bearing geologic materials. This document also provides procedures for well development, groundwater sampling, and hydraulic testing. Site-specific procedures will depend on project objectives, geologic conditions, and appropriate State and Federal regulations and standards.

This page intentionally blank.

BSOP NO. 10

SUBSURFACE WATER INVESTIGATION

TABLE OF CONTENTS

1 Monitoring Well Investigation 1-1

1.1 Objective 1-1
1.2 Procedure 1-1
1.2.1 Well Design Specifications 1-1
1.2.2 Borehole Completion 1-3
1.2.3 Well Construction 1-3
1.2.4 Double Cased Wells 1-5
1.2.5 Well Head Completion 1-6
1.2.6 Documentation and Recording 1-7

2 Fluid Level Measurement and Recording 2-1

2.1 Objective 2-1
2.2 Procedure 2-1
2.2.1 Fluid Level Measuring Reference Point 2-1
2.2.2 Electrical Tape Method 2-2
2.2.3 Continuous Recording 2-2
2.2.4 Interface Probe Methods 2-3
2.2.5 Data Reporting 2-3
2.2.6 Climatic Monitoring (Continuous/Non-Continuous) 2-4

3 Well Development 3-1

3.1 Objective 3-1
3.2 Procedure 3-1
3.2.1 Criteria and Well Development Documentation 3-4

4 Monitoring Well Sampling 4-1

4.1 Objective 4-1
4.2 Procedure 4-1
4.2.1 Pre-Sampling Trip Preparation 4-1
4.2.2 Initial Activities 4-2
4.2.3 Well Evacuation 4-3
4.2.4 Sample Collection 4-5
4.2.5 Labeling and Handling Requirements 4-5
4.2.6 Collection of Quality Control Samples 4-6
4.2.7 Field Equipment Cleaning Procedure 4-6
4.2.8 Field Documentation Procedure 4-7

5 Hydraulic Testing 5-1
5.1 Single-Well Aquifer (Pumping) Testing 5-1
5.1.1 Objective 5-1
5.1.2 Procedure 5-1
5.1.2.1 Slug Test Design 5-1
5.1.2.2 Slug Test Execution 5-2
5.1.2.3 Post Operation 5-4
5.2 Multiple-Well Aquifer (Pumping) Testing 5-5
5.2.1 Objective 5-5
5.2.2 Procedure 5-5
5.2.2.1 Pumping Test Design 5-5
5.2.2.2 Test Site Selection 5-9
5.2.2.3 General Testing Procedures 5-9
5.2.2.4 Aquifer Pre-Test 5-10
5.2.2.5 Step Drawdown Tests 5-11
5.2.2.6 Single and Multiple Well Constant Yield Tests 5-13
6 References 6-1

Attachments

1-1 Monitoring Well Installation Detail Form
1-2 Casing/Well Screen Tally Form
2-1 Water Level Data Summary Form
3-1 Monitoring Well Development Log
4-1 Field Data Information Log for Groundwater Sampling

1 MONITORING WELL INVESTIGATION

1.1 Objective

It is the policy of Bhate to design, install, and construct monitoring wells in a manner that ensures that all wells installed meet the criteria of being 1) adequately sealed to prevent surface contamination or cross contamination between aquifers; 2) capable of yielding high quality groundwater samples representative of true water quality within the target unit; 3) adequately protected; and 4) in compliance with all applicable State and federal regulations. The procedures set forth in the section apply to all Bhate and contract personnel who are responsible, both directly and indirectly, for the design of monitoring well systems, for oversight of drilling and construction operations, and for evaluation of the suitability and reliability of monitoring wells and data and measurements obtained from monitoring wells.

1.2 Procedure

Monitoring wells are installed primarily to provide information on the hydrogeology of a site and to determine the extent of migration of contaminants, if any. Well permits will be obtained prior to initiating construction, repair, or abandonment of any monitoring well. The drilling subcontractor, who must be certified in the appropriate state, will obtain the permits. The certified well driller or his representative must be present at the site during all drilling operations. All drilling personnel must meet all applicable OSHA requirements. The supervising hydrogeologist must be fully knowledgeable and experienced with federal and state requirements/regulations for groundwater monitoring programs.

Site-specific work plans will specify drilling methods to be used, and will present proposed well design and construction details. The drilling methods, well design, and well construction will adhere to the criteria and methodologies presented in this document. The proposed well design will be based on existing subsurface and groundwater fluctuation data. The design will present these data with the grain size of the filter pack and a discussion of the procedure to be used in the field for determining screen placement. All equipment, well materials and tools that will enter the borehole must be steam cleaned with a high temperature pressure washer (water at 200°F and 1,500 psi) prior to installation. The cleaned materials will be wrapped in clean Visqueen plastic and protected from possible contaminants. If needed, they will be steam cleaned again immediately before installation. The specifications presented herein are to be adhered to unless a site-specific variance has been granted by the appropriate authorities.

1.2.1 Well Design Specifications

Well Screen

In general, the standard monitoring well screen installed at a site will consist of a 2-inch inside diameter Schedule 40 PVC screen with 0.010 inch slots. If site specific conditions warrant, well

screen materials will be designed based on site specific data or selected depending upon the known or suspected chemical contaminants at the site, and so that the completed monitoring well provides data, which meet the project data quality objectives. Monitoring well screens will be sized to retain over 90% of the filter pack. Well screen materials will be of the same size and strength material as the well riser, and will be a non-contaminating, continuous wrap design. Factory-slotted screens will be acceptable for USACE projects as long as the suspected contaminants do not include those that have an affinity for sorbing onto soil particles (e.g., PCBs and PAHs) or metals. In such cases, continuous-wrapped screen will be required. No glues, adhesives, lead shot, or lead wool will be used to connect the riser sections or screen. No field-slotted screen will be permitted.

Filter Pack

The filter pack material will be clean, washed, well-rounded silica sand sized to perform as a filter between the formation material and the well screen. Proper documentation will be furnished concerning the composition, grain-size distribution, cleaning procedure, and chemical analysis. The filter pack gradation shall have a uniformity coefficient (C_u) of not more than 2.5, and shall be sized so that the slotted screen will retain 90 percent of the material.

The standard filter pack material used for monitoring wells will typically conform to the size appropriate for slot screen. The following table provides the appropriate sized filter pack material in accordance with ASTM D 5092-90 (ASTM, 1990).

Table 1-1. Grain Size Distribution Chart

Size of Screen Opening, mm (in.)	Slot No.	Sand Pack Mesh Size Names(s)	1% Passing Size (D-1), mm	Effective Size (D-10), mm	30% Passing Size (D-30), mm
0.125 (0.005)	5	100	0.09 to 0.12	0.14 to 0.17	0.17 to 0.21
0.25 (0.010)	10	20 to 40	0.25 to 0.35	0.4 to 0.5	0.5 to 0.6
0.50 (0.020)	20	10 to 20	0.7 to 0.9	1.0 to 1.2	1.2 to 1.5
0.75 (0.030)	30	10 to 20	0.7 to 0.9	1.0 to 1.2	1.2 to 1.5
1.0 (0.040)	40	8 to 12	1.2 to 1.4	1.6 to 1.8	1.7 to 2.0
1.5 (0.060)	60	6 to 9	1.5 to 1.8	2.3 to 2.8	2.5 to 3.0
2.0 (0.080)	80	4 to 8	2.0 to 2.4	2.4 to 3.0	2.6 to 3.1

In addition to the primary filter pack installed along the screened interval of the monitoring well, a secondary filter pack consisting of finer material will be installed to prevent bentonite pellets from commingling with the primary filter pack.

Well Riser

Well riser (casing) will consist of polyvinyl chloride (PVC) or stainless steel. PVC pipe will be new, threaded, flush-jointed, and as a minimum, conform to the requirements of ASTM F480-81/SDR 13.5 (Schedule 40). PVC pipe will bear markings identifying the material as that specified, and will carry the seal of the National Sanitation Foundation. Stainless steel pipe will consist of new, flush-jointed, and threaded, Type 304, corrosion-resistant steel. Unless noted in the site-specific work plans, monitoring wells will be 2-inch inside diameter (ID).

Bentonite Seal

The bentonite seal will be composed of commercially manufactured sodium bentonite pellets, which do not exceed 0.25-inch diameter. Clean, potable water will be used to hydrate the bentonite.

Annular Seal

The cement grout will consist of a mixture of Portland Cement (ASTM C 150-00) and water in the proportion of approximately 6 to 7 gallons of approved water per bag of cement (94 pounds). In addition, 3 to 5 percent by weight of sodium bentonite powder will be added. The minimum acceptable grout weight will be 14 pounds per gallon (lbs/gal). The cement grout weight will be determined using a mud balance. Water may be added to the mix in small amounts, at the discretion of the field geologist, to achieve pumpability.

1.2.2 Borehole Completion

Procedures for the drilling and advancement of soil borings are presented in BSOP No. 1, Section 4. Drilling techniques employed must minimize disturbance of subsurface samples and must not introduce contamination to the subsurface or allow contaminants, if any, in shallow hydrogeologic units to migrate to deeper units. A Monitoring Well Installation Detail Form (Attachment 1-1) will be completed for each monitoring well. This form includes a comprehensive list of pertinent drilling hydrogeologic and monitoring well construction information.

1.2.3 Well Construction

At all times during the progress of the work, precautions will be taken to prevent tampering with the well or the entrance of foreign material into it. Run-off will be prevented from entering the well during construction.

Depending on site conditions, consideration should be given to overdrill the borehole so that soils that have not been removed or that have fallen into the borehole during auguring or drill stem retrieval will fall to the bottom of the borehole below the depth of the filter pack and the screen. Normally 3 to 5 feet are sufficient for overdrilling. Once the desired depth of the borehole has been attained, the borehole will be prepared for installation of the well casing and

screen. If drilling fluid was used, it must be flushed from the borehole with clean potable water to the extent possible without causing borehole collapse. The well casing/screen assembly will then be inserted into the borehole. For wells that are being installed beneath a confining or semi-confining unit, or are intended to monitor deep members or portions of an aquifer, the well casing/screen assembly will be installed within pre-set surface casing, to prevent cross-connections between different aquifer zones. If a well cannot be properly completed to prevent such an interchange of water between water-bearing zones or to prevent a loss of artesian pressure, the well will be abandoned and plugged.

The casing/screen assembly will be installed as follows:

1. Prior to installation of the casing and screen, the lengths and diameters of all components (including the bottom plug or cap) will be measured and recorded on the Casing/Well Screen Tally Form (Attachment 1-2). The casing riser and screen assembly will be installed round, plumb, and true to line.

2. A bottom plug will be attached to the bottom of the screened section.

3. The well screen will be connected to the riser sections of the casing assembly. For wells intended to monitor the upper surficial aquifer near the water table, the well screen will be installed so as to straddle the free water surface, extending both above and below the water table to accommodate seasonal or other variations in its elevation. In all cases, the top of the screen will be located at least 2 feet below the base of the down-hole seal. Screen slot size will be 0.10 inches, or the appropriate size based on grain-size distribution analyses and filter back design, as discussed above.

4. For wells installed to depths exceeding 50 feet, centralizers will be placed at locations just below the screen, just above the location of the bentonite seal, and at 50-foot intervals along the riser casing. Stabilizers will not be used if their installation prevents the placement of the annular materials.

5. Well risers will extend at least 2.5 feet above the ground surface, unless well casings must be completed at ground surface level as specified by the client or mandated by site conditions and planned use of the well. If a flush finish completion is conducted, the placement of annular materials will be done in such a way that the inside of the well casing is protected, i.e., the protective vault will be waterproof and strong enough to support anticipated loads.

6. The primary filter pack will be placed in the annulus between the well material and borehole using a tremie pipe, starting with the tremie at the bottom of the borehole and working the tremie upward as the filter pack is placed. When using hollow stem augers (HSAs), the augers will be raised incrementally during the installation of the filter pack. Attempts will be made to keep the bottom of the augers below the top of the filter pack during installation. The level of the top of the filter pack in the annulus will be continually verified by tag-line measurement during placement. The filter pack will extend at least 2 feet above the top of the screen. The volume of the installed filter pack will be compared with the annular volume

to verify proper placement of the filter pack. This material accounting will be recorded in the field book.

7. A secondary filter pack, at least 2 feet thick and consisting of material finer than the primary filter pack, but of similar composition, will be placed in the annulus between the primary filter pack and the overlaying bentonite seal. This secondary filter is intended to prevent movement of the seal or grout (or both) into the underlying primary filter pack.

8. A bentonite seal at least 2 feet thick will be placed in increments of four 6-inch lifts immediately above the filter pack. Pouring of the pellets is acceptable for boreholes less than 50 feet where the annular space is large enough to limit the potential for bridging and to allow measurements to ensure that the pellets have been placed at proper intervals. For depths greater than 50 feet, the bentonite pellets will be installed through a tremie pipe. The bentonite pellet seal will be hydrated either by pouring water or utilizing the tremie pipe with an approximately equal volume of clean, potable water, and allowed to hydrate a minimum of 30 minutes between lifts before proceeding. If water is used, its source and the volume used should be documented in the field book. After the placement of the final lift, the bentonite seal will be allowed to hydrate another 2 hours before grouting the remaining annulus. The level of the top of the bentonite seal will be verified by tag-line measurement prior to grouting. When using HSAs, the bottom of the augers will be left in the borehole as close as possible above the bentonite seal.

9. To grout the remaining annular space, a side-discharging tremie pipe will then be maintained 3 feet above the bentonite seal and will be used to slowly place the cement/bentonite grout mixture. When using HSAs, the augers will be pulled incrementally during the grouting procedures to limit borehole collapse. Grout will be pumped into the annulus through the tremie pipe until undiluted grout flows from the borehole at the ground surface. The grout will be allowed to cure for at least 24 hours prior to development.

1.2.4 Double Cased Wells

Surface casing will be installed in the borehole when drilling a monitoring well that will be installed at depths below relatively impermeable (confining) layers or below depths of known contamination. The purpose of the surface casing is to prevent cross-contamination between two aquifer zones and to prevent dragging contamination down to a greater depth during the drilling procedure.

A pilot borehole should be drilled and the surface casing installed to slightly below the known depth of contamination or a minimum of 2 feet into the confining layer. The diameter of the surface casing will be sufficient to contain the inner casing and a 2-inch annular space. The size of the borehole should be sufficient to maintain a 2-inch annular space between the borehole walls and the surface casing. The material of the surface casing may vary, but it will be chemically inert and able to withstand potential chemical degradation and any forces exerted on the casing during its installation and monitoring well construction.

The outer casing should be grouted by the tremie method from the bottom to within 2 feet of the ground surface. The grout should be pumped into the annular space between the outer casing and the borehole wall. This will be accomplished by either placing the tremie tube in the annular space and pumping the grout from the bottom of the borehole to the surface, or placing a grout shoe or plug inside the casing at the bottom of the borehole and pumping the grout through the bottom grout plug and up the annular space on the outside of the casing. If the casing is set into very tight clay, both of the above methods may have to be used, because the clay usually forms a tight seal in the bottom and around the outside of the casing preventing grout from flowing freely during grout injection. A minimum of 24 hours will be allowed for the grout seal to cure before attempting to drill through it. The grout mixture used to seal the outer annular space will be a neat cement mixture of one 94-lb bag of Type I Portland Cement per approximately 7 gallons of water and 3 to 5 percent bentonite powder by weight.

When drilling through the seal, care will be taken to avoid cracking, shattering, and/or washing out the seal. If caving conditions exist such that the outer casing cannot be sufficiently sealed by grouting, the out casing should be driven into place and a grout seal placed in the bottom of the casing. Removal of outer casings, which are sometimes called temporary surface casings, after the well screens and casings have been installed and grouted, is not acceptable. Trying to remove outer surface casings after the inner casings have been grouted could jeopardize the structural integrity of the well. The boring will be advanced through the surface casing to the target depth for monitoring well installation. The borehole beneath the surface casing will be of sufficient diameter to maintain a 2-inch annular space between the monitoring well and the borehole well.

1.2.5 Well Head Completion

Upon completion of the well, a suitable vented cap will be installed on the top of the well riser. The well riser will be surrounded by a larger diameter protective steel or PVC casing rising approximately 3 feet above ground level and set a minimum of 2 feet below the ground surface into the cement grout backfill. A drain hole at least 0.25 inches in diameter will be drilled at the base of the protective casing. The protective casing will be provided with a locking cap and a brass padlock or the well casing will be secured with a plastic expansion cap locked with a hexagonal key. All locks used at a particular site will be keyed alike. If wells are required to be finished flush with the grout or pavement, these will be fitted with a watertight, flush-mounted, traffic-rated steel cover at least 6 inches larger in diameter than the well riser. The well casing will be secured with a plastic expansion cap locked with a hexagonal key.

A minimum 3-foot by 3-foot by 4-inch thick concrete pad, sloped away from the well, will be constructed around the monitoring well with the top outer edge at the final ground elevation. At locations where vehicular traffic is likely, the concrete pad will be reinforced with reinforcement wire or rebar. Three or four 3-inch diameter or larger concrete-filled steel or PVC posts will be equally spaced around the well and cemented in place around the concrete pad. The base of these posts shall extend 2 feet bls and be appropriately 3 feet tall. Metal rebar may be installed inside the posts for additional stabilization. The concrete pad surface immediately surrounding

the top of the well will be sloped away from the well. After the well is installed, the area will be cleaned and all discarded material will be properly disposed.

1.2.6 Documentation and Recording

In addition to providing standard field documentation procedures, a Monitoring Well Construction Form (Attachment 1-1) will be prepared to provide an accurate "as-built" diagram of each well and will include the following information:

- Project and site names, well number and the total depth of the completed well
- Depth of any grouting or sealing, and the amount of cement and/or bentonite used, and to the total borehole depth and elevation
- Depth, elevation, and type of well casing
- Installation date or dates, and name of the driller and the geologist installing the well
- All pertinent construction details of monitoring wells, such as depth to and description of all annular fill materials; gradation of filter packs; length, location (depth and elevation), diameter, slot size, material, and manufacturer of well casing and screen; position of centralizers; and location of any blank pipe or intermediate casing installed in the well
- Description of surface completion, including protective steel casing, protective pipes, and concrete surface seal
- Surveyed coordinates and elevation of top of ground and top of well riser. The accuracy of the survey points will be in accordance with BSOP No. 11.
- A brief stratigraphic log, showing depths to and descriptions of major lithologic changes encountered in the well borehole

A discussion of information to include in the boring logs is presented in BSOP No. 1. All original well record form, field report forms and geologist logs will be maintained in the project file.

This page intentionally blank.

2 FLUID LEVEL MEASUREMENT AND RECORDING

2.1 Objective

This section presents procedures and guidelines for measuring groundwater and free product levels in monitoring wells. Consistent repeatable data should be obtained.

2.2 Procedure

Groundwater and product fluid levels are measured to determine the existence and nature of fluids in subsurface aquifer systems, and to evaluate fluid potential for hydraulic movement within and between hydrogeologic units during static and pumping conditions.

Water level measurements used to define the water table or a single potentiometric surface should be collected within a 24-hour period. Water level measurements should be taken within a shorter time interval if an aquifer is being significantly influenced by a recharging or discharging mechanism. Tides, river stages, impoundments, storm water drainages, and production pumping of irrigation and supply wells all can significantly affect the potentiometric surface over a brief period of time (U.S. EPA, 1992).

Water level measurement equipment will be constructed of materials that are chemically inert and which are not prone to sorption or desorption.

Before collecting water level measurements for potentiometric maps, the water levels in piezometers and wells should be allowed to recover for a minimum of 24 hours after installation/construction, well development, for purging. When collecting water levels at a site, measurements should be collected from wells in order of most contaminated to least contaminated, if known. This order typically follows collecting water levels from wells located in the most upgradient position to the most downgradient position. It is important to recheck water levels in all wells approximately 15 minutes after the initial measurement, to ensure the water levels have stabilized. If different readings are indicated, recheck the water levels until they have stabilized. Fluid level measurements will be recorded on Water Level Data Summary forms (Attachment 2-1).

2.2.1 Fluid Level Measuring Reference Point

Fluid level measurements are to be made from the top of the permanent well casing. The reference point will be marked near the north side of the casing using a permanent marker. All fluid levels are measured as depth from the reference point. This reference point must be surveyed for vertical elevation so that fluid level depths may be converted to elevations.

2.2.2 Electrical Tape Method

The use of an electrical tape to measure fluid levels is simple and convenient. The device consists of an electrode suspended by a pair of insulated wires. An ammeter, indicator light, or audible signal is used to indicate when the electrode touches the water surface. Batteries supply the current. This method is also known as the electric sounder method.

The procedures for this method are as follows:

1. Check batteries before going to the field and carry an ample supply of spares.

2. Turn power switch "ON".

3. Decontaminate tape and probe upon arrival to a site and between measurement in different wells or piezometers, as outlined in BSOP No. 13.

4. Lower probe into the well until a sharp deflection is noted on the meter, the indicator light is illuminated, or the audible tone is activated.

5. Verify that the electrode is functioning properly and is indicating the water surface with the same depth each time by moving the probe up and down several times.

6. Hold the probe cable at the measuring point location on the well pipe at the exact depth where the probe indicates the water surface to be. Record the reading to the nearest 0.01 foot.

7. Remove the probe from the well.

2.2.3 Continuous Recording

The measurement of groundwater elevations within pumping or monitoring wells can be accomplished by use of a mechanical or digital-analog, computerized, continuous recording system, and should be performed according to specifications given by the manufacturer of each unit. In general, when using either the mechanical or digital system, the pressure or electrical transducer is lowered into the well until it intersects the water surface. The actual fluid depth is then measured by the method described above, and is used to calibrate the continuous recorder. The field geologist is responsible for making proper adjustment. Proper maintenance of continuous recording devices during level monitoring should be performed by the field geologist so that continuous, permanent records are developed for the specified period of time. Records shall be sorted on mechanical graph paper or on a microprocessor. Frequent calibrations of equipment should also be made by the field geologist during monitoring periods of long duration. Calibration methods vary depending on the type of recording device used. Specific manufacturer's calibration procedures must be followed.

2.2.4 Interface Probe Methods

When opening wells that may contain non-aqueous phase liquids (NAPLs, a.k.a., free product), the air within the well head should be monitored to determine the potential for fire, explosion, and health and safety hazards. If light non-aqueous phase liquids (LNAPLs) are present, interface gauging will be used to differentiate between the water table and the surface of the immiscible layer.

For measurement of free product levels, a hydrocarbon interface probe gives different signals (e.g., constant versus intermittent) for the groundwater and free product surfaces. The procedures for this method are as follows:

1. Follow steps 1 through 3 of the electrical tape method.

2. Lower the probe into the well until an audible tone sounds, indicative of exposure to an organic liquid.

3. Hold the interface probe cable at the measuring point location on the well pipe at the exact depth where the probe indicates the organic liquid surface to be. Record the depth below top of casing to the organic liquid surface to the nearest 0.01 foot.

4. Slowly continue lowering the interface probe until the organic liquid/water interface is reached, indicated by the respective audible tone.

5. Move the interface probe slowly up and down to verify that it is functioning properly and is indicating the interface at the same depth each time.

6. Hold the probe cable at the measuring point location on the well pipe at the exact depth where the probe indicates the organic liquid/water interface to be. Record the depth below top of casing to the interface to the nearest 0.01 foot.

2.2.5 Data Reporting

All water level field data are to be entered in field log books or on an appropriate Water Level Data Summary form and will include the following information:

- Date (at top of page)

- Time recording is made

- Station location (monitoring well or piezometer identification)

- General comments about condition

- Measuring point, usually top of casing (TOC)

- Depth to product (if measured), to nearest 0.01 foot
- Depth to water, to nearest 0.01 foot

Field notes should also include the serial number of any measurement or recording device. If more than one device is used, indicate which device is used for each measurement.

2.2.6 Climatic Monitoring (Continuous/Non-Continuous)

The continuous and non-continuous monitoring of climatic conditions can be performed through the set-up and maintenance of a weather shed at the specified site. Specific instruments and measuring devices to be employed include, but are not limited to, rain gauges, hydrographs, barometers, thermometers, and any other site-specific instruments. Actual field monitoring of instruments should be performed according to methodologies described in NOAA (1972). It is the responsibility of the field geologist to maintain and preserve appropriate monitoring equipment throughout the specified monitoring interval and to retain all data for future use.

3 WELL DEVELOPMENT

Well development represents the attempts to restore the volume of aquifer material immediately surrounding the screened portion of the well to its indigenous condition by correcting damage done to the formation during the drilling process. Well development can be accomplished in many different ways. The effectiveness of the different methods are based on three primary factors:

1. The type of geologic material

2. The design and completion of the well

3. The type of drilling technology used in the borehole advancement and well installation

The discussion below presents the objectives of monitoring well development. It also describes the procedures that may be used to effectively develop a well. The actual procedures used will be dependent on site-specific, and possibly even well-specific, conditions. Personnel responsible for well development are encouraged to read U.S. EPA (1996), Aller (1989), and ASTM (1994) for more detailed discussions of well development philosophy, procedures, and criteria.

3.1 Objective

The primary objective of installing a monitoring well at a site is to collect a groundwater sample that is representative of the quality of groundwater surrounding the well. Well development is an important component of monitoring well completion. Monitoring wells should be sufficiently developed to ensure that they meet their intended objectives. The purposes of well development are the following:

- Assure that groundwater enters the well screen freely and at ambient velocities, thus yielding a representative groundwater sample and an accurate fluid level measurement.

- Remove all water and drilling additives that may have been introduced into the borehole and formation during drilling and installation activities.

- Remove fine-grained sediments entrained in the filter pack and within the well itself so that groundwater samples have a minimal turbidity and excessive silting of the well does not occur.

3.2 Procedure

Well development should ensue within 1 week after completion of the well, but no sooner than 24 hours after the grouting is completed. Well development can be performed using one or more of the following methods: bailing, surging, overpumping, or jetting. As noted above the method

used will be based on site-specific conditions. It is anticipated that for the majority of the monitoring wells, the predominant development methods will be surging and overpumping. It is important to realize that effective development of a well requires the movement of fluids both into and out of the screen parts of the well and the surrounding filter pack. No dispersing agents, acids, or explosives will be utilized in well development activities. The water level and height of sediment in the well should be measured and recorded in the field log book prior to development, as discussed below. All development equipment inserted into the well will be decontaminated in accordance with BSOP No. 13.

In most cases the initial well development method will be hand bailing to remove accumulated sediment in the well. The bailer will be allowed to fall freely through the well past the water surface until it strikes the bottom of the well. The bailer will be raised to the surface vigorously to create a high action level of water movement. This free fall and rapid removal will provide some surging action to the filter pack and proximal formation material. To enhance the removal of sediment, the bailer should be intermittently agitated by rapid short upward strokes from the bottom of the well. Bailing should be continued until the water is free from suspended sand-sized sediment.

A surge block may be needed to create a stronger surging action than the bailer does. If this is the case, the surge block and the bailer should be used in conjunction with each other. After utilizing the surge block for a short period of time, the sediment that entered the well as a result of the surging should be removed with the bailer, as described in the previous paragraph. The surge block will be composed of inert material that will not affect the water quality in the well. The diameter of the surge block should be 0.125 to 0.25 inches smaller than the inside diameter of the well. Caution should be employed to ascertain that the block can move freely up and down the inside of the well without obstructions. The vertical action of the surge block will be accomplished either manually or mechanically with drill rods or wire line. Care should be taken in the length of the strokes, the velocity of the up and down movement, and the duration of each surge block cycle. If the surging action is too vigorous for the well construction and formation characteristics, then the activity can be detrimental to the well integrity. Detailed discussions are presented in Aller (1991) and ASTM (1994); responsible personnel should review these discussions before beginning well development with the surge block method.

Following the removal of suspended sand-sized sediment, the well development process should include overpumping the well with a submersible electric pump (e.g., Grundfos Redi-Flo2™). Commonly, the overpumping method will be employed in the latter stages of well development. In overpumping, the pump is operated at a capacity that substantially exceeds the yield of the formation (i.e., the capacity of the formation to deliver water to the well). This flow velocity well exceeds the flow velocity that will be induced during the purging process of well sampling.

If the monitoring well was installed using a mud rotary method, then it is recommended that water jetting be considered as a component of well development to break down the mud cake that may line the borehole walls. The particles of the mud cake can then be brought into and removed from the well by overpumping. The construction of the well should be considered

when evaluating this process. For instance, the effectiveness of jetting is commonly reduced by the fine slot sizes (0.010 inch) of many monitoring wells. In addition, any sediment entrained in the jetting fluids may cause damage to a screen composed of PVC materials. As noted above, no dispersing agents will be utilized in the jetting of a well.

It is recommended that development with air (e.g., airlift pumping) not be employed, because the introduction of air to the formation could change the chemical environment of the aquifer (e.g., redox potential) and reduce the hydraulic conductivity of the formation.

During well development, the entire well cap and interior of the well casing above the water table should be washed using only water from that well. Water exiting the well will be contained and properly disposed of, as warranted, based on-site conditions. If the addition of water is required to facilitate surging and bailing, only formation water from that well will be used. For water jetting, the water quality must be verified prior to the introduction of any water from a source other than the well itself.

In some cases, such as the need to sample a well in a short time frame because of limited site access, preliminary well development is necessary. Preliminary well development may be conducted after installation of the well screen, casing and filter pack, but prior to installation of the bentonite seal and grout. Additional filter pack will be added, as needed, after completion of the preliminary well development to bring the filter pack up to the desired depth after settlement that may have occurred. Preliminary well development may consist simply of pumping fresh water for a brief interval (several minutes) through the well screen to flush drilling mud from the filter medium, or can include surging and pumping of the well.

All preliminary well development will be completed within 1 day after the screen, casing, and filter pack are installed. If soils above the screened aquifer are known or suspected to contain hazardous constituents, preliminary well development will be restricted to flushing the filter medium briefly through the screen. All other development efforts will then conducted after the bentonite seal and grout has been place and allowed to set.

Since preliminary well development is conducted prior to the installation of protective casings and surface pads, the borehole must be protected. Soil will be mounded around the base of the exposed well casing prior to development, in order to direct run-off away from the well annulus.

The person responsible for well development should inquire if any special circumstances apply to monitoring wells that contain free product. There may be instances where development of such wells results in the vertical spreading of contaminants through the aquifer matrix. In these cases, development may entail only the inward movement of water and materials toward the well.

3.2.1 Criteria and Well Development Documentation

Development criteria will include the stabilization of standard field parameters. These criteria will be refined, based on initial results at each site, with the objective of achieving minimum turbidity in all wells.

During the pumping stage of development pH, specific conductivity, dissolved oxygen, oxidation-reduction, temperature, and turbidity will be measured generally once every well volume removed. For wells that have a short water column (for instance, in wells screened across the water table), it may be more practical to measure the field parameters at greater intervals. In addition, due to the typically turbid nature of most groundwater monitoring wells, it is routinely necessary to remove significant volumes of purge water to obtain turbid free water. Therefore, in these cases it is more practical to measure the field parameters at greater intervals. The development of a well will be continued until the following conditions have been met:

- The duration of the well development has been at least 2 hours.
- The field parameters (pH, specific conductivity, oxidation-reduction, dissolved oxygen, and temperature) have stabilized for four consecutive measurement events (less than a change of 0.2 pH units and less than a 10 percent change for the other parameters between four consecutive readings).
- The turbidity has been significantly decreased. Attempts will be made to attain turbidity values of 5 nephelometric turbidity units (NTUs) or less for four consecutive measurement events. However, it should be recognized that the groundwater at some locations is naturally turbid because of organic or inorganic colloids. The meeting of these criteria will be evaluated by a senior geologist on a well-specific basis.
- The yield of the well is representative of the transmissivity of the aquifer. For wells that were installed with the mud rotary method, mud cake on the borehole the walls may reduce the yield of the well. If this occurs, development should continue until the mud cake is removed and the yield increases.

If field parameters stabilize, but the water remains turbid, the well, filter pack, and/or borehole walls may still contain construction materials, such as mud cake that has not been removed from the borehole walls. Excessive or thick drilling muds may not be efficiently flushed out of a borehole by purging only. In this case, surging or jetting methods may be needed to be applied.

Measurement of field parameters will documented on a Monitoring Well Development Log (Attachment 3-1) which will include the following information:

- Date and weather
- Summary of well construction

- Pre-development water level
- Measured height of sediment (if any) at bottom of well prior and after the development activities and the detected changes in this height during development
- Time of each measurement
- Cumulative total volume of water removed prior to each measurement
- Volume of water removed between measurements
- Pumping rate
- Method of development and duration employed
- Time and duration of cessation of development
- Results of field parameter measurements, and volume of suspended particles in water

Additional observations such as apparent yield of the well or detected odors should also be noted on the development log.

Eight-ounce clear glass jars will be used to collect samples of the pre-development water and the last water withdrawn from the well at the cessation of development. These samples will be labeled and photographed with a 35mm color photograph. The photograph should be taken following agitation of the jar contents by shaking, and prior to the settlement of fines in the jar. In addition, the photograph will be a suitably backlit close-up that shows water clarity. These photographs and samples will be stored throughout the duration of the project at an appropriate facility for later observation if needed. It should be noted that this procedure will be conducted on a site/client specific basis and may not apply to all projects.

This page intentionally blank.

4 MONITORING WELL SAMPLING

4.1 Objective

The objective of this section is to provide procedures for the sampling of groundwater monitoring wells. These procedures were designed so that the groundwater samples will be of verifiable and legally defensible quality. To ensure that this goal is achieved, sampling protocols must be strictly followed and sample collection and handling must be properly documented in field log books, groundwater sampling logs, Chain-of-Custody forms, and project files. This procedure applies to all personnel who are responsible, both directly and indirectly, for groundwater sampling and the evaluation of analytical results from groundwater samples.

4.2 Procedure

This section presents procedures to be followed for collection of groundwater quality samples. All sampling personnel must be knowledgeable of groundwater sampling procedures and the established protocols. Adequate preparations for sampling trips will be made by responsible personnel to ensure that sampling will be performed as efficiently and cost effectively as possible. Proper sampling protocol will be followed to ensure that representative samples of groundwater are provided for analysis, and that the act of sampling and the specific equipment utilized to collect each specific sample.

It is recommended that a monitoring well not be sampled for at least 2 weeks after well development has been completed.

Procedures specified in the site-specific health and safety and sampling and analysis plans also must be reviewed to determine if more stringent procedures are required at a specific site.

4.2.1 Pre-Sampling Trip Preparation

The site team leader and the environmental technician or staff hydrogeologist performing the sampling are responsible for review of available information and preparation of equipment to ensure that the sampling trip is performed as efficiently as possible. Thorough preparation will reduce lost time during sampling episodes, and will ensure that the sampler has the proper equipment available on site to follow established protocols. The following pre-sampling activities are recommended.

During an appropriate time frame prior to the scheduled sampling date, a vehicle and all necessary equipment will be signed out and checked by the sampling personnel. The sampling equipment will be inspected to confirm proper calibration and good repair. Equipment failing to operate within manufacturer's recommended specifications, must be properly repaired, adjusted, and calibrated prior to utilization. Documentation of equipment maintenance must be recorded in the field log book and the specific equipment log. Expendable field supplies will be checked

to determine whether adequate quantities of all supplies are available. Monitoring well construction logs and available water level data for all wells to be sampled should be reviewed to evaluate the conditions that will be encountered and the approximate volume of water to be evacuated.

Sample bottles must be ordered from the laboratory at least 2 to 3 days prior to the sampling date. When ordering sampling bottles, bottles for blanks and duplicates must be obtained, and the type of blanks to be obtained must be specified. Reagent grade water for equipment blanks must be provided by the laboratory or an appropriate vendor (e.g., Fisher Scientific).

The order of well sampling will be determined, such that the least contaminated wells at the site will be sampled first, progressing to the most contaminated wells last. Sample bottles obtained from the laboratory must be checked to ensure that all necessary sample bottles and associated preservatives have been provided.

On the day of sampling, on-site weather conditions will be evaluated to determine whether they are suitable for sample collection. Groundwater samples must not be collected in weather conditions that may affect the integrity of the samples (i.e., rain or high winds). Upon arrival at the site, the location and access to wells will be verified. Wells will be inspected to determine the condition of the surface casings, surface seals, well identification, and condition of the casing. The general condition of the wells and any abnormalities noted must be recorded in the field log book and the Field Data Information Log for Groundwater Sampling (Attachment 4-1).

4.2.2 Initial Activities

Prior to working at a particular well, plastic sheeting will be laid on the ground surface immediately surrounding the monitoring well.

It is recommended that immediately after opening the cap of the well, an OVA reading be collected at the well head. This may provide preliminary information on water quality and health and safety conditions.

The fluid levels will be measured in the well using the electric tape method. The presence of NAPLs should be reported to the project manager immediately, and may dictate the sampling method to be utilized.

The total depth of each well will be measured before sampling to ensure that silt or sand has not entered the well, which would indicate that the well screen has been damaged. The measurement will be used in the calculation of the volume of water standing in the well casing. The depth will be measured utilizing either an electric water level indicator, or, if contamination is known or suspected, a weighted, disposable line. A correction will be applied, as necessary, when using the electrical tape to account for the added length of the sensor located at the end of the tape.

4.2.3 Well Evacuation

All monitoring wells will be purged before collecting samples in order to remove stagnant water from the well casing and to assure that the groundwater sample submitted for laboratory analyses is representative of groundwater quality in the aquifer. During the purging process, the field parameters (pH, specific conductivity, dissolved oxygen, temperature, redox potential [Eh], and turbidity) will be measured at least once every well volume. To determine the volume of water standing in the well, the following formula may be used:

$$V = 0.041\ d^2h$$

Where: h = water column height (feet; well depth minus depth to water level)

d = diameter of well (inches)

V = volume of water standing in the well (gallons)

Well purging will continue until the following criteria have been met:

- A minimum of three to five well volumes have been evacuated from the well.
- Three consecutive measurements in which the field parameters have stabilized. Stabilization occurs when the pH measurements remain constant with 0.1 units, specific conductivity, redox potential, and dissolved oxygen vary by no more than 10 percent, and the temperature is constant. Utilizing low-flow purging and sampling techniques may require removal of a greater volume of water than three to five volumes.
- The turbidity is less than 5 NTUs.

All pertinent conditions of the sampling and the basis for field decisions should be documented in the Field Log Book and/or the Field Data Information Log for Groundwater Sampling.

It is strongly recommended that purging and sampling be conducted using low flow techniques, with an appropriate pumping mechanism, such as a Grundfos Redi-Flo2™ submersible pump. This method has been shown to cause a non-turbulent flow into the monitoring well screen (at a velocity closer to the "natural" flow). Hence, a relatively non-turbid sample, which is representative of the groundwater quality near the well, can be sampled. Purging may also be accomplished with a Teflon, PVC, or stainless steel bailer. It should be noted that bailing induces turbulent flow into the well, and hence tends to produce turbid samples with suspended particulate or colloidal matter which could lead to sampling artifacts (Barcelona and others, 1994). If groundwater is shallow enough (less than 30 feet bls) a peristaltic pump can be used for the purging and sampling of the well. The usage of a peristaltic is advantageous due to reducing equipment that needs to be decontaminated and likelihood of cross contamination between wells.

In preparation for groundwater sampling, an approximately 12-foot by 12-foot section of unused plastic sheeting will be secured on the ground surface surrounding the well. After measuring the pre-purging water level and total depth of the well, all of the pertinent equipment will be arranged and the pump and associated Teflon tubing will be inserted into the well. The pump intake will be installed to a depth in the central part of the screened interval of the well. After the pump assembly is secured, a water level probe will be lowered into the well to monitor the water level during the purging process.

The pump shall be turned on and the minimum flow rate possible shall be immediately attained. The objective is to have a flow rate low enough so that non-turbulent, rather than turbulent, flow is induced. Ideally, the flow rate should be close to the natural flow rate of groundwater moving through the well.

The field parameters noted above, as well as the water level in the well, will be measured and recorded immediately upon the commencement of purging and at least once every well volume thereafter. Attempts shall be made to limit the drawdown in the well to less than 0.25 feet. Drawdowns greater than this may indicate turbulent flow into the well.

In general, purging shall continue until the criteria listed above are met. Immediately after the groundwater sample and associated QA/QC samples have been collected, the field parameters will be measured and collected a final time. If the well exhibits a low yield, the flow rate will be reduced as much as possible to prevent the well from pumping dry. However, if the well does go dry, the well may be sampled following sufficient recovery, without the need for purging the minimum of three to five well volumes and documenting the stabilization of the field parameters. However, the field parameters should be measured and recorded as the measurements of record for the sampling event.

The low flow purging and sampling can be accomplished by pneumatic, peristaltic, or submersible pumps. A check valve will be installed along the intake purge line to minimize backwash of water. To minimize the possibility of contamination, all pumps and lines placed into the water will be manufactured of either Teflon or cleaned stainless steel.

If it is necessary to purge and sample the well with the bailer method, then Teflon or stainless steel bailers will be used. All bailers will be raised and lowered into the well using new nylon line, which will be disposed of between wells. The evacuation point should be just below the water surface when the screen is set near the bottom of the well.

All sampling personnel will wear a clean pair of new, disposable, latex or vinyl gloves while purging. After sampling, the hoses or bailers that come in contact with the groundwater will be decontaminated. The evacuated water will be discharged away from the well or will be containerized and properly disposed of if site conditions warrant this method of handling.

All field parameters and water level measurement will be recorded on the Field Data Information Log for Groundwater Sampling. Other information to be included on this log includes the

following: a summary of the construction and apparent integrity of the monitoring well, calculation of the height of the standing water in the well, and any pertinent field observations.

4.2.4 Sample Collection

After stabilization of the required field parameters or as soon as sufficient recharge has occurred, the samples will be collected using the same system as that used for well purging. Sampling personnel will wear a clean pair of new, non-powdered, disposable latex gloves at each different sampling location. These gloves will be donned immediately prior to sampling and will never come in contact with the media being sampled.

Samples will be collected in the following order (as applicable):

- Volatile organic compounds (VOCs)
- Dissolved gases and total organic carbon (TOC)
- Purgeable organic compounds
- Purgeable organic halogens (POX)
- Total organic halogens (TOX)
- Extractable (semi-volatile) organic compounds (SVOCs)
- Total metals
- Dissolved metals
- Phenols
- Cyanide
- Sulfate and chloride
- Turbidity
- Nitrate and ammonia
- Radionuclides

4.2.5 Labeling and Handling Requirements

After each sample is collected, samples will be labeled and handled in accordance with procedures specified in BSOP No. 4.

4.2.6 Collection of Quality Control Samples

All Quality Assurance/Quality Control (QA/QC) sampling activities must comply with the requirements of the following documents:

1. The Installation Quality Assurance Program Plan (QAPP).

2. Bhate's approved Comprehensive Quality Assurance Plan (CompQAP).

3. The Site-Specific Quality Assurance Project Plan (QAPP).

In the case where these documents do not concur as to the number and type of QC samples to collect in any given situation, the most conservative number and type of QC samples will be collected (the number which provides the greatest ratio of QC samples to environmental samples and the types of QC samples which allow for a thorough evaluation of sampling and analytical method). Several types of QC samples can be collected, including equipment (rinsate) blanks, field blanks, material blanks, duplicates, matrix spike and matrix spike duplicates, and trip blanks.

Equipment blanks are taken in the field by pouring reagent grade water provided by the laboratory through the pump or other sampling device prior to sampling. The blank is immediately poured into the sample bottles, which are preserved as ordinary groundwater samples

Field blanks will be collected wherever ambient sources of contamination, such as heavy industrial traffic and chemical storage in tanks or holding ponds, exist. Such conditions may affect the quality of the samples collected.

Duplicate samples are collected to evaluate the accuracy and precision of the contract laboratory. Duplicate samples will be collected at the same time as the associated environmental samples.

All of the sample bottles for a particular analysis for both the duplicate and the environmental samples will be filled before filling the sample bottles for the next analysis.

Appropriate sample containers filled with analyte-free water will be sealed and provided by the laboratory. Trip blanks will accompany all sample shipments containing VOC samples. These samples will be kept in the storage and shipping containers during all stages of the sampling efforts.

4.2.7 Field Equipment Cleaning Procedure

Sampling and monitoring equipment, including electrical water level tapes, bailers, and pumps, will be decontaminated upon arrival on site and between each well. Field Decontamination procedures will be the same as the equipment decontamination procedures specified in BSOP No. 13. Sampling personnel should always sample the least contaminated wells first (if known),

as an additional precaution against introducing contaminants into the wells and samples. If decontamination is performed in the field, all rinse water must be contained in a manner that prevents the introduction of contamination to surface water, boreholes, and adjacent areas. All rinsate should be collected in a compatible container and properly disposed of to prevent contamination of adjacent areas.

4.2.8 Field Documentation Procedure

A bound field log book must be maintained by sampling personnel to provide a daily record of sampling and events. The following information must be recorded into the log book using indelible, waterproof ink:

- Date
- Time
- Weather conditions
- Personnel present
- Signature of personnel making entry
- Well ID
- Total depth of well (if measured)
- Depth to water, measurement technique
- Well yield
- Purge volume and method
- Sample volume and method
- Sample withdrawal procedures
- Date and time of collection
- Well sampling sequence
- Field analyses performed
- Analyses requested
- Quality control activities

- Calibration procedures and results
- Problems encountered and corrective actions taken
- Sample distribution and transporter
- Field observations (e.g., unusual conditions, equipment malfunctions, and condition of monitoring well)

Pertinent data may be recorded on the Field Data Information Log for Groundwater Sampling for that specific sampling location. If the groundwater sampling log or its equivalent is used to record sampling data, then the field log book must be annotated by the personnel utilizing the form(s) such that the sample collection activities will be traceable through field records to the personnel sampling and the specific equipment utilized.

Additional documentation procedures are in BSOP No. 3. Shipping and handling of all samples will be accordance with the procedures specified in BSOP No. 4.

5 HYDRAULIC TESTING

5.1 Single-Well Aquifer (Pumping) Testing

5.1.1 Objective

The objective of this section is to provide procedures by which single-well aquifer (slug) tests are to be designed, conducted, and analyzed.

5.1.2 Procedure

5.1.2.1 Slug Test Design

Slug tests are utilized to obtain order-of-magnitude approximations of hydraulic conductivity in the portion of the aquifer immediately surrounding the well screens. Testing programs should be designed with consideration for potential aquifer heterogeneity, well construction variability, and ultimate use of results. Depending on a general understanding of the relative hydraulic conductivity of the aquifer to be tested (and thus the anticipated speed of the response to slug entry or removal), the depth to the water table, the types of contaminants, and well construction details, decisions can be made regarding slug test materials and data collection methodology. No water or other liquid shall be introduced into wells.

The time required for a slug test to be completed is a function of the volume of the slug, the transmissivity of the formation, and the well casing size. The slug volume should be large enough that a sufficient number of water level measurements can be made before the water level returns to equilibrium conditions. The length of the test may range from less than a minute to several hours.

Preparations for testing will include:

Office

- Review associated BSOP documents and information on the wells to be tested (depth to water, depth of well, screened interval, casing size).
- Coordinate schedules with sampling and other efforts.
- Review the operator manual provided with the electronic data logger, if appropriate.
- Check out and ensure the proper operation of all field equipment. Ensure that the electronics data logger is fully charged, if applicable. Test the electronic data logger and pressure transducers using a container of water (e.g., sink, bucket of water).

- Obtain appropriate sampling log book, and assemble a sufficient number of field form to complete the field assignment.

- Review appropriate sections of the Site Safety Plan.

Field

- Locate monitoring wells to be tested and appropriate decontamination areas.

- Assemble appropriate testing equipment.

- Decontaminate the transducers and cable as specified in BSOP No. 13.

- Collect initial water level measurement on the monitor well and record in the field log book.

- Before beginning the slug test, enter and record information in the electronic data logger. The type of information will vary depending on the model used. When using different models, consult the operator's manual for the proper data entry sequence to be used.

5.1.2.2 Slug Test Execution

The following general procedures will be used to collect and report slug test data. The procedures required for a particular slug test may vary slightly from those described, depending on site conditions. Modifications to the procedures shall be documented in the field log book.

A. When the slug test is performed using an electronic data logger and pressure transducer, most of the data will be electronically stored internally or on computer diskettes or tape. The information will be transferred directly to a computer and analyzed. A copy of field notes with supplemental information and a computer printout of the data shall be maintained in the files as documentation.

B. The field log book is used to record observations and supplemental information. At a minimum the following information shall be recorded for each test:

   - Site location: Brief description of the general location of the well.

   - Well or piezometer ID: Unique number assigned to each well or piezometer where measurements are taken.

   - Date of the test

   - Slug dimensions: Dimensions of the slug or displacement object in tenths of feet.

   - Personnel: Initials of personnel performing field measurements or collecting samples.

- Test type: The slug device is either inserted (falling head) or withdrawn (rising head) from the monitor well. Note the appropriate test type.

- Comments: Include appropriate observations or information concerning antecedent weather conditions, sequence of events, or work being conducted at the site.

- Elapsed time (min:sec): Cumulative time readings from beginning of test to end of test in minutes and seconds.

- Representative depth to water measurements: Depth to water levels should be recorded to hundredths of feet below the measuring point. Initial and final depth to water shall be measured using an electric tape. Test data may be recorded using a pressure transducer and electronic data logger.

C. Procedures for conducting a slug test.

1. Measure the pre-test water level in the well and record in the field log book and on the data sheet. The pint and time of measurement shall be noted in the field log book.
2. Cover sharp edges of the well casing with duct tape to protect the transducer cables.
3. Connect the transducer cable to the electronic data logger.
4. Slowly lower the transducer and cable down the well to a depth below the slug submergence for the test, but at least 6 inches from the bottom of the well. Be sure this depth of submergence is within the design range stamped on the transducer. Securely tape the transducer cable to a stationary object to keep the transducer at a constant depth.
5. Display the initial water level on the recording device according to manufacturer's instructions. Record the initial water level on the test data sheet.
6. Flag the slug/rope assembly so that easy identification can be made of how much rope must be left out to fully immerse the slug beneath the static water level, and how much rope to pull back to suspend the slug above the static water level.
7. Immediately after commencement of recording of data on the data logger, "instantaneously" introduce the slug and the rope to minimize slug movement. While results obtained from analysis of these "falling head" data may not be theoretically valid, continue to record and monitor head recovery until water returns to static levels. (Falling head tests are only valid for wells with the static water level above the top of the screen. Rising head tests will be utilized for wells that are screened across the water table. From a practical standpoint, data should be recorded until the displacement head has been reduced to 10 percent or less of maximum displacement, and monitoring should be continued until only 1 to 2 percent displacement remains.
8. If the head data are recorded manually, equate the moment of maximum head change to time zero, and measure and record the depth to water and the time at each reading. Depths should be measured to the nearest 0.01 foot. The number of depth-time measurements necessary to complete the test is variable. Measurements should be frequent enough so that the change in water level between two successive measurements is less than 5 percent of the initial change in water level. It is critical to make as many measurements as possible in the early part of the test.

9. After effective static water level has been reached, a second slug test may be performed on the well by instantaneously removing the slug from the water column. This type of slug test is referred to as a rising head slug test. If such a test is to be conducted, the slug should be withdrawn to the predetermined suspension level and the rope tied off to minimize slug interference with the transducer cable (if applicable), or the slug should be fully withdrawn to permit access for water level measurement.
10. Continue measuring and recording depth-time measurements until the water level return to within 10 percent of equilibrium conditions.

If the well is used as a monitoring well, precautions should be taken to prohibit contamination of the wells by material introduced into the well. Bailers, slug/rope assemblies, and measuring devices should be cleaned thoroughly before each test in accordance with BSOP No. 13. If tests are performed on more than one monitor well, care must betaken to avoid cross-contamination of the wells.

Slug tests must be conducted on relatively undisturbed wells. If a test is conducted on a well that has recently been pumped for water sampling purposes, the measured water level should be within 0.1 foot of the water level before sampling. At least 1 week should elapse between the drilling and development of a well and the performance of a slug test.

5.1.2.3 Post Operation

Field

- Decontaminate equipment and dispose of rope according to BSOP No. 13.
- If using an electronic data logger:
  1. Stop logging sequence.
  2. Save memory.

Office

- Inventory sampling equipment and supplies. Repair or replace all broken or damaged equipment.
- Replace expendable items.
- Return equipment to storage area, and report incidents of malfunctions or damage.
- Review field log book for completeness.
- Deliver original forms, logger data, and log books to supervising personnel with copies to file.

- Interpret slug test results. Analyze slug test using appropriate software packages or graphical solutions.

- Send data logger or pressure transducers to factory for recalibration, if needed.

5.2 Multiple-Well Aquifer (Pumping) Testing

5.2.1 Objective

This section presents general guidelines for performing multiple well aquifer pumping tests.

5.2.2 Procedure

5.2.2.1 Pumping Test Design

An aquifer test is a controlled field experiment designed to evaluate the performance characteristics of a well and the hydraulic properties of the associated aquifer(s). Such tests provide the best method for characterizing aquifer hydraulic properties when properly designed, performed, and conducted. They provide estimates for both transmissivity (T) and storage coefficient (S) over a large and representative volume of aquifer. Optimal performance of aquifer tests requires clear definition of three sets of requirements:

1. An understanding of the hydrogeological system being tested (i.e., confined or unconfined conditions and areal extent of aquifer).

2. The operational goals of the test (i.e., what information is needed from the test).

3. Identification of an analytical method that describes the aquifer conditions and can be used to reduce the data.

Aquifer tests are multifaceted, interdisciplinary efforts requiring coordination between technical personnel. Whereas, the more complex test are more difficult logistically and often more expensive, they generally yield much more information. Some essential hydrologic information, such as rates of leakage through confining layers can be obtained only by performing the more sophisticated aquifer tests.

Control Procedures of Aquifer Test Programs

The technical complexity of aquifer testing combined with the institutional concerns such as storage of contaminated water, requires procedures for general control of aquifer test programs. A 7-step control procedure is defined below. Detailed planning for, and supervision of, site-specific aquifer pumping tests must be conducted by an experienced hydrogeologist or groundwater hydrologist assigned to the project. The procedure presented here is primarily intended for project or task managers who require an aquifer test to be performed as part of a multi-discipline project.

1. Define test program requirements:
   a. Describe the hydrogeologic system to be tested (e.g., porous, heterogeneous aquifer).
   b. Define the operational goals and requirements for the test (e.g., transmissivity, confined or unconfined nature of aquifer, and/or leakage coefficients of aquitards).
   c. Identify a method by which the data may be interpreted, according to the known hydrogeologic conditions and operational requirements.
2. Evaluate operational constraints.
3. Design the test methods and develop an aquifer test plan.
4. Conduct pre-test activities.
5. Initiate test and collect data.
6. Interpret the data with the chosen model or appropriate analytical method.
7. Evaluate the need for further testing.

The following sections detail the information required for each step in the procedure.

Defining Test Program Requirements

Describe the Hydrogeologic System to be Tested: An aquifer test is interpreted by comparing field results with those expected from mathematical models. Therefore, the hydrogeology of the system to be tested should be defined as well as possible. Important factors include the following:

- Aquifer lithology and hydraulic characteristics (volume and nature of interstitial pores)
- Groundwater occurrence (confined, unconfined)
- Aquifer thickness, extent, and uniformity
- Boundary conditions (nearby streams, ponds, no-flow boundaries)
- Aquifer isotropy and homogeneity
- Well screen placement
- Anticipated flow rates and type of flow (transient, steady state)
- Potential for leakage form confining units

- Well characteristics (available drawdown, screen transmitting capacity, well efficiency)

Define Operational Goals of the Test: The information that is desired at the completion of the test should be well defined. Generally, the greater the accuracy and amount of information desired, the greater the complexity of the test. For example, the hydraulic conductivity of a test zone can be estimated on a local basis from a brief, inexpensive slug test (as described in Section 5.1.2), but the evaluation of leakage from confining units requires more complex aquifer pump testing. Common test goals include:

- Estimating aquifer yield for water supply needs
- Defining aquifer characteristics for groundwater assessment (usually driven by RCRA, CERCLA or other regulatory program)
- Defining aquifer characteristics for the siting of future waste disposal facilities
- Defining aquifer hydraulic characteristics for remedial action (extraction wells, hydraulic control, etc.)

Aquifer testing data needed for developing water supplies range from a single well performance test to a detailed aquifer characterization where a field of multiple wells is required. Where corrective or remedial actions are required, more detailed information is generally required. More complex aquifer tests are usually required to define this information. A relatively detailed conceptual model of the hydrogeologic system is needed to develop the optimal pumping strategy. The objectives of each project, the funding available, and other institutional concerns must be evaluated to develop the best aquifer testing approach.

Various types of aquifer test programs may be developed. The data generated vary according to the type of program. Some of the parameters which may be defined by an aquifer testing program are:

- Transmissivity (T)
- Storage coefficient/specific yield (S/Sy)
- Hydraulic conductivity (K)
- Vertical hydraulic conductivity of confining units (K_v)
- Groundwater yield from confining units
- Hydraulic resistance of confining units
- Specific capacity of a well

- Well losses and efficiency

The parameters defined during the aquifer test program must be selected based upon the objectives of the project, and the test methodology must be designed to yield the desired parameters. The desired areal extent of the test must also be considered when selecting the test method, discharge rate, and test duration.

Identify Testing and Data Reduction Methodology: Based on the criteria identified in the preceding two subsections, a method that fulfills the operational goals and adequately represents the hydrogeologic system must be identified. A large number of tests are available; may are summarized in Driscoll (1986) and Kruseman and DeRidder (1994).

Evaluate Operational Constraints

Once the technical basis of a program is established by the procedure described in the previous section, the plan must be expanded to address other site specific requirements, such as shutdown of water supply wells based on geologic and hydrologic conditions present at the site and 24-hour limited access to the site. In addition, environmental compliance requirements (notably requirements for discharge and disposal of any contaminated fluids) must be identified and fulfilled.

Define the Test Method and Testing Plan

An aquifer test plan should be prepared prior to testing. The plan should define all site-specific concerns such as site accessibility, water disposal, and 24-hour per day working conditions. The plan should also address specific technical concerns. Based upon the site hydrogeology, the chosen analytical method should be used to simulate the range of conditions expected to occur. This simulation should be used to determine observation well locations and screen settings, the length of time to run the test, and the effects of boundary conditions.

Conduct Pre-Test Activities

Prior to conducting the test, all activities scheduled for completion prior to test startup should be performed. These activities may include installation of additional observation wells, further defining the fluids management program, installation of pumping and monitoring devices such as flow meters and pressure transducers, and performing a sort term preliminary aquifer test. Specific pre-test activities for some pumping tests are defined in the following paragraphs. Pre-test activities may define needed modifications to the aquifer test plan.

Initiate Test and Collect Data

After completion of all previous procedures and pre-test activities, the aquifer test should be conducted according to the aquifer test plan (with modifications). Procedures for the most common tests are presented below.

Interpret Data with Chosen or Appropriate Analytical Method

After data are collected, they should be analyzed and interpreted with an appropriate analytical method or model. General data interpretation methods for curve-matching techniques are discussed below.

Evaluate the Need for Additional Testing

After data are compiled and interpreted, they should be evaluated to determine if additional testing is warranted. Events indicating the need for additional testing include evidence of interference from nearby pumping or special boundary conditions.

5.2.2.2 Test Site Selection

Selecting an appropriate test site will prevent difficulties often encountered during test data evaluation. In some cases, existing wells may be used or the hydrologic factors of a specific location may be of concern, thus predetermining the test site. However, the test site is usually dictated by the project needs and the test must be designed to accommodate site logistics.

Well field design and construction is dependent on the hydrogeology of the area and the hydrogeologic units of concern. Factors such as aquifer type, transmissivity and stratification should be taken into consideration by an experienced hydrogeologist when determining screen interval, number of wells, and well locations. Piezometers may be constructed in adjacent hydrogeologic units to determine any hydrologic connection these units have with the aquifer of concern.

5.2.2.3 General Testing Procedures

Water Level Measurements

The preferred method of collection aquifer test data is by the use of pressure transducers to ensure fast, accurate (at least to 1/100 of a foot), time-drawdown measurements. Other methods, as described in the references listed in Section 6, may be used to collect water level measurements when conducting multiple well, constant discharge tests. The same device should be used for measuring water levels in a particular well throughout the duration of a test. A reference point from which all water level measurements are made should be designated on the casing of each well. The reference point should be surveyed for vertical and horizontal location, in accordance with BSOP No. 11. The exact time all water level measurements are taken should be recorded on a military 24-hour time scale.

Decontamination

Any equipment used in production or monitoring wells must be thoroughly cleaned prior to use. Cleaning procedures are based upon site-specific conditions and the needs of the project. The actual cleaning procedure should be determined by the project manager and defined in the

aquifer test data. Cleaning may consist of little or no cleaning (if the well is to be used on for aquifer testing), disinfection (if the well is a water supply well), steam cleaning, or more rigorous cleaning procedures, as described in BSOP No. 13.

5.2.2.4 Aquifer Pre-Test

Background

An aquifer pre-test will be conducted prior to conducting multiple well constant rate aquifer tests. The purpose of this test is to collect all available background information of the hydrogeologic system in question, ensure that all equipment is in good working order, and confirm that all pumping settings and water level measuring devices are prepared for the start of the actual test. This pre-test should be conducted far enough in advance of the start of the actual test to allow the water levels to recover and stabilize, and to collect sufficient pre-test trend data.

Often, the pre-test is a step drawdown test. This is done to observe aquifer responses at various flow rates. The following are five questions of concern that should be answered at the completion of the pretest are:

1. What is the maximum anticipated drawdown at various discharge rates?

2. What discharge rates occur in various pump speeds or valve settings?

3. What is the best method to measure yield?

4. Is the discharge pipe far enough from the radius of influence to avoid recharging the aquifers of concern?

5. Are the observation wells yielding usable drawdown data a various discharge rates?

The pre-test is also used to test equipment, and to finalize valve settings so that the discharge rates are established at the beginning of the constant rate aquifer test.

Field Method for Aquifer Pre-Test

1. Prepare test setup for duration of test.

2. Decontaminate all equipment to be inserted into the well, if required.

3. Measure and record the pre-test water levels and the exact time of each reading.

4. Setup pump and discharge lines. The pump or intake must be set below the anticipated drawdown and within the pump lifting capacity. Discharge must be directed outside of the radius of influence of the cone of depression. If pumping from contaminated area, all water must be discharged in a manner compliant with applicable or relevant and appropriate regulatory requirements.

5. Determine the best method to measure yield. Orifice weirs and totalizing flow meters are the most common methods. Specifications for constructing orifice weirs are presented in Driscoll (1986). All discharge measuring devices should be manually checked for accuracy, if possible, by filling a container of known volume and recording the time required to fill it.

6. Initiate pumping, record time, and immediately monitor water levels in the pumping well. For all aquifer tests involving pumping, it is important that the water level in the pumping well be monitored before, during, and after pumping. Water levels and the time of each measurement since pumping began should be recorded. Discharge rates should be monitored every 5 minutes. Monitor wells nearest the pumping well should be monitored early in the test to see when a response to pumping is observed. As the radius of influence expands, more distant monitoring wells should be monitored.

7. Semilog and arithmetic data plots of drawdown versus time should be developed in the field based on test results.

8. After water levels begin to stabilize, the discharge rate should be increased to approximately 25 percent of the maximum possible anticipated discharge.

9. Continue monitoring water levels and discharge rates in the systematic manner established at the beginning of the test.

10. Conduct the test at several pumping rates. Each pumping rate should be run until water levels stabilize. The final rate should be approximately equal to the maximum possible discharge rate at which total available drawdown is attained.

11. At the completion of the test, all pump valves should be at the settings desired for the actual test.

5.2.2.5 Step Drawdown Tests

Background

Step drawdown tests are used to evaluate the effects of pumping in a well at various discharge rates. Information gained from step drawdown tests include:

- Values of specific capacity at various discharge rates
- Optimum discharge rates for pumping well
- The amount of well loss attributable to laminar and turbulent flow components, respectively
- The effect of various discharge rates on turbulent flow

- Aquifer parameters such as transmissivity (T), hydraulic conductivity (K), and storage coefficient (S; if data is obtained from observation well); and projected future pumping costs

A properly conducted test will include steps of equal length and constant discharge.

Field Method for Step Drawdown Tests

1. Obtain water level data and the barometric pressure at the time of the reading for a minimum of 1 week prior to the start of the test.

2. Make sure that the outlet of the discharge is located far enough from the well to avoid recharging the aquifer being tested.

3. Conduct an aquifer pre-test as described above. At least four to five possible discharge rates in increasing order should be determined during the pre-test.

4. After allowing sufficient time for water levels to recover to pre-test levels, the test may be conducted.

5. Measure static water level and record the date and time of reading.

6. Measure the barometric pressure every 1/2 hour.

7. Insert transducers at a depth below the maximum anticipated drawdown and at least 1 foot above the bottom of the well.

8. Initiate pumping at the lowest discharge rate to be used. At the exact moment pumping begins, begin recording water levels in the pumping well and the exact time since pumping began. As many measurements as possible should be obtained during the first 5 minutes of the test. Water levels should then be obtained at increasing time intervals, beginning with 1 minute and increasing slowly to a maximum of 10 minutes. Intervals should never exceed the time required for water levels to change by 0.2 feet. Water levels should be measured in observation wells early enough to obtain initial drawdown data. Early drawdown data is especially critical in determining aquifer coefficients.

9. Measure and record discharge rates at the same frequency water level measurements are obtained. The entire test generally runs from 8 to 72 hours.

10. After running the initial step for 1 to 2 hours, and stabilization of water level, increase the discharge to the second desired rate. Measure the water levels and discharge rates at the same intervals as taken in the first step.

11. Continue the test through a minimum of two additional steps conducted in a manner similar to the first two.

12. Drawdown data should be plotted in the field to ensure stabilization of water levels during each step.

Data Analysis and Interpretation

The following information is required to analyze data and should be collected during the test:

1. Discharge rates of pumping well
2. A number of water level data during the course of the test (each record should specify water level and the exact time since pumping began)
3. Distance from pumping well to each observation well
4. Description and elevation of each measuring point
5. Total depth and screen interval of pumping and monitoring wells
6. Well materials and construction details of all wells
7. Barometric pressure at 30-minute intervals

Analysis of step drawdown pumping test shall be completed by an experienced hydrogeologist or groundwater hydrologist and reviewed by senior personnel. Drawdown data should be corrected for regional trends, barometric pressure, or any other influencing factors. Most common methods of analysis are described in Bear (1979), Bierschnenk (1964), and Rorabough (1953). However, appropriate methods of analysis are dependent on the type of aquifer being tested and well field construction and design.

5.2.2.6 Single and Multiple Well Constant Yield Tests

Background

Constant yield aquifer tests are conducted to estimate aquifer coefficients such as transmissivity and storativity (specific yield for unconfined aquifers), and hydraulic conductivity. Constant yield aquifer tests can also be used to predict:

1. The drawdowns in a well at future times and at varying discharge rates;
2. The effect of new withdrawals on existing wells;
3. The radius of the cone of influence for individual or multiple wells (multiple well tests);
4. The hydraulic characteristics of confining beds

5. The position and nature of aquifer boundaries; and

6. The degree of vertical and horizontal anisotropy.

A value for storage coefficient cannot be obtained from tests in which only the pumping well is monitored.

Field Method for Single or Multiple Well Constant Rate Tests

1. Obtain water level data for a minimum of 1 week prior to the start of the test.

2. Make sure that the outlet of the discharge is located far enough from well to avoid recharging of the aquifer being tested.

3. Conduct a pre-test as described above. A minimum of 2 days should be allowed for water to return to static conditions prior to starting the actual test.

4. Measure and record the static water level in all wells to be monitored and the exact time of each measurement.

5. Insert transducers below the depth of maximum anticipated drawdown and at least 1 foot from the bottom of the well.

6. Initiate pumping at a discharge rate determined during the pre-test. Record as many measurements as possible and the exact time since pumping began for each measurement during the first 5 minutes of the test. Measurements should then be obtained every 30 seconds to 10 minutes, then at increasing intervals beginning at 1 minute and increasing slowly to a maximum of 10 minutes, thereafter. Intervals should never exceed the time required for water levels to change by 0.2 feet.

7. Periodically record discharge rates throughout the test (every 5 minutes for the first hour and with each water level measurement thereafter).

8. Monitor barometric pressure every 15 minutes for the first 60 minutes of the test and every 30 minutes thereafter.

9. Measure and record any amounts of precipitation that occur during the test.

10. Develop Log-log and semilog plots of the test data in the field.

11. The test should last for at least 48 hours in an unconfined aquifer and 24 hours in a confined aquifer. Field data plots should be evaluated prior to termination of the test for variations in drawdown.

12. After pumping has ceased, the rate of the water level rise toward the static (pre-pumping) water level should be recorded, as described in Driscoll (1986, Chapter 9). This rate of

recovery provides a means for calculating the coefficient of transmissivity and storage, using information from the pumping well.

Data Analysis and Interpretation

The following information is required to analyze data and should be collected during the test:

1. Discharge rate of pumping well
2. Water level data during the course of the test (each record should specify water level, pumping or observation well ID, and the exact time since pumping began)
3. Distance from pumping well to each observation well
4. Description and elevation of each measuring point
5. Total depth and screen interval of pumping and observation wells
6. Well materials and construction details of all wells
7. Barometric pressure at 30-minute intervals

Analysis of aquifer pumping test shall be completed by an experienced hydrogeologist or groundwater hydrologist and reviewed by the Project or Task Manager. Drawdown data should be corrected for regional trends, barometric pressure, or any other influencing factors. Most common methods of analysis are described in Driscoll (1986), Lohman (1972), or Kruseman and DeRidder (1970). Several computerized solution techniques are also available. However, appropriate methods of analysis are dependent on the type of aquifer being tested and well field construction and design.

This page intentionally blank.

6 REFERENCES

Air Force Center for Environmental Excellence, *Handbook for the Installation Restoration Program, Remedial Investigations and Feasibility Studies,* September 1993.

Aller, L., et al, *Handbook of Suggested Practices for the Design and Installation of Ground-water Monitoring Wells,* EPA 600/4-89/034, 1989.

American Society of Testing and Materials (ASTM), *Standard Guide for Sampling Groundwater Monitoring Wells,* D 4448-85a, May 1986 (Reapproved 1992).

American Society of Testing and Materials (ASTM), *Standard Practice for Design and Installation of Groundwater Monitoring Well in Aquifers,* D 5092-90, October 1990 (Reapproved 1995).

American Society of Testing and Materials (ASTM), *Standard Practice for Development of Ground-water Monitoring Well in Aquifers,* D 5521-94, September 1994.

American Society of Testing and Materials (ASTM), *Standard Specification for Portland Cement,* C 150-00, 2000.

Barcelona, M.J., Wehrmann, H.A., and Varljen, M.D., *Reproducible Well-Purging Procedures and VOC Stabilization Criteria for Ground-water Sampling,* Ground Water, Vol. 32, No. 1, 1994.

Bear, J., *Hydraulics of Groundwater,* McGraw-Hill, pp. 477-479, 1979.

Bierschenk, W.H., *Determining Well Efficiency by Multiple Step-Drawdown Tests,* International Assoc. Sci. Hydrology, Pub 64, pp. 493-507, 1964.

Driscoll, F.G., *Groundwater and Wells,* Johnson U.O.P., Inc., pp. 550-552, 1986.

Fetter, C.W., Contaminant Hydrogeology, Prentice Hall, 1994.

Kruseman, G.P. and N.A. DeRidder, *Analysis and Evaluation of Pumping Test Data,* 3rd Edition, International Institute for Land Reclamation and Improvement, Wageningen, The Netherlands, 1994.

Lohman, S. W., *Groundwater Hydraulics,* U.S.G.S. Professional Paper No. 708, 1972.

NOAA, National Weather Service Observing Handbook No. 2, *Substation Observatories,* U.S. Department of Commerce, 1972.

Puls, R.W., Powell, R.M., *Acquisition of Representative Groundwater Quality Samples for Metals,* Ground Water Monitoring Review, Vol. 12, No. 3, 1992.

Rorabaugh, M.I., *Graphical and Theoretical Analysis of Step Drawdown Test of Artesian Well*, Proc. Am. Soc. Civil Engrs., w. 79, sep. 362, 23 pp, 1953.

U.S. Environmental Protection Agency, *RCRA Ground-Water Monitoring Draft Technical Guidance*, Office of Solid Waste, November 1992.

ATTACHMENT 1-1

MONITORING WELL INSTALLATION DETAIL FORM

BHATE
Environmental Engineers and Scientists

WELL CONSTRUCTION DIAGRAM (Flush Mount)

SITE: _____
PROJECT NAME: _____
PROJECT NO./PHASE: _____
DRILLING CONTRACTOR: _____
DRILLER: _____
GEOLOGIST: _____

WELL/BORING ID: _____
DRILLING METHOD: _____
DATE(S): _____
SURVEYOR: _____
NORTHING (NAD 83): _____
EASTING (NAD 83): _____

NOT TO SCALE

Surface Elevation (NAVD 88): _____

Casing Elevation (NAVD 88): _____

Borehole Diameter (in): _____
Well Casing Diameter (in): _____

DEPTH TO WATER
During Drilling: _____
Date _____
Pre Development: _____
Date _____
Post Development: _____
Date _____

Top of Secondary Filter Pack: _____

Top of Filter Pack: _____

Top of Screen: _____

Bottom of Screen: _____
Bottom of Well: _____
Bottom of Filter Pack: _____

Borehole Depth: _____

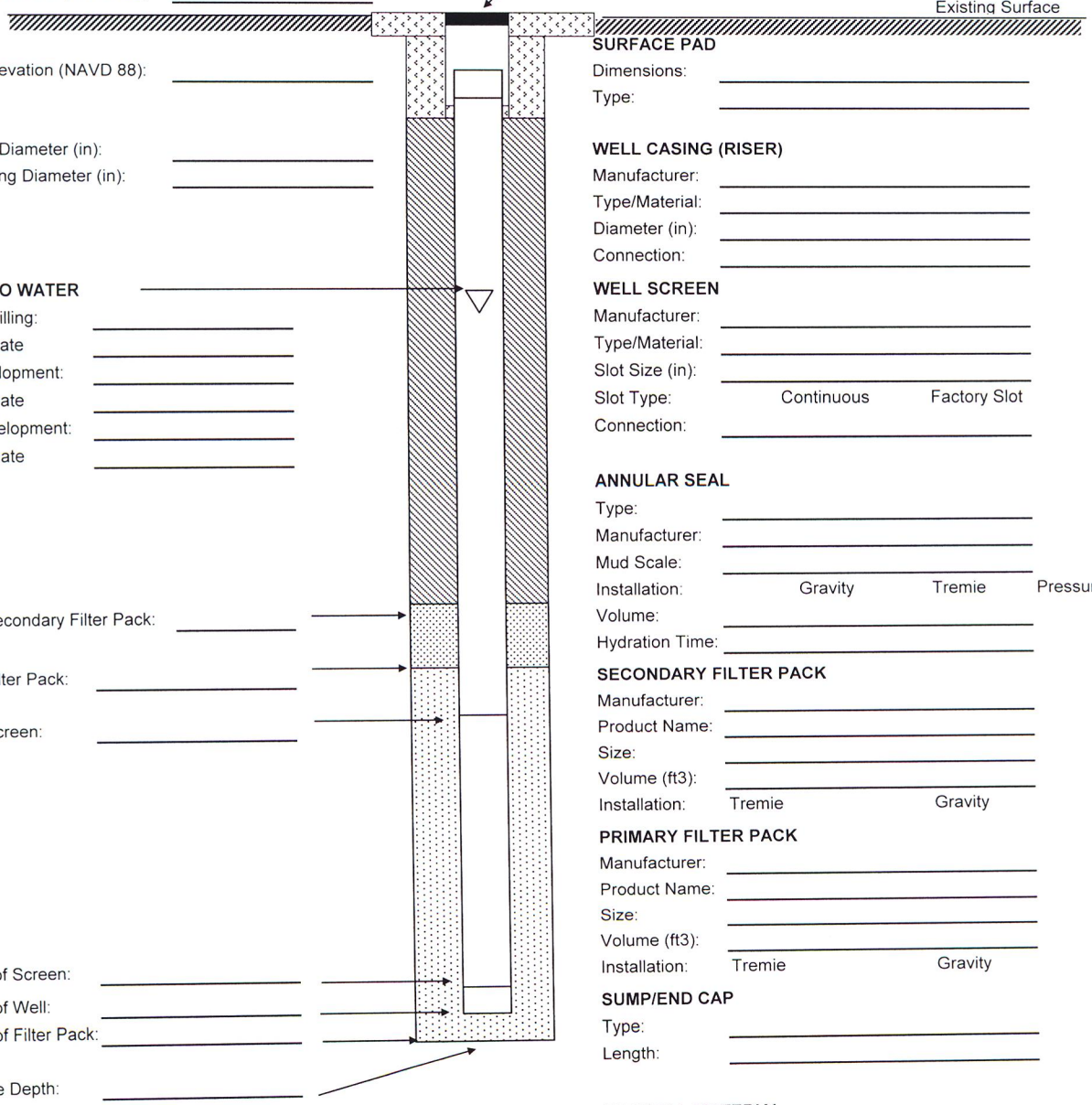

PROTECTIVE CASING
Type: _____
Dimensions: _____
Length: _____

SURFACE PAD
Dimensions: _____
Type: _____

WELL CASING (RISER)
Manufacturer: _____
Type/Material: _____
Diameter (in): _____
Connection: _____

WELL SCREEN
Manufacturer: _____
Type/Material: _____
Slot Size (in): _____
Slot Type: Continuous Factory Slot
Connection: _____

ANNULAR SEAL
Type: _____
Manufacturer: _____
Mud Scale: _____
Installation: Gravity Tremie Pressure
Volume: _____
Hydration Time: _____

SECONDARY FILTER PACK
Manufacturer: _____
Product Name: _____
Size: _____
Volume (ft3): _____
Installation: Tremie Gravity

PRIMARY FILTER PACK
Manufacturer: _____
Product Name: _____
Size: _____
Volume (ft3): _____
Installation: Tremie Gravity

SUMP/END CAP
Type: _____
Length: _____

BACKFILL MATERIAL
Type: _____
Volume:

Comments:

BHATE
Environmental Engineers and Scientists

WELL CONSTRUCTION DIAGRAM (Abovegrade)

SITE: _____
PROJECT NAME: _____
PROJECT NO./PHASE: _____
DRILLING CONTRACTOR: _____
DRILLER: _____
GEOLOGIST: _____

WELL/BORING ID: _____
DRILLING METHOD: _____
DATE(S): _____
SURVEYOR: _____
NORTHING (NAD 83): _____
EASTING (NAD 83): _____

NOT TO SCALE

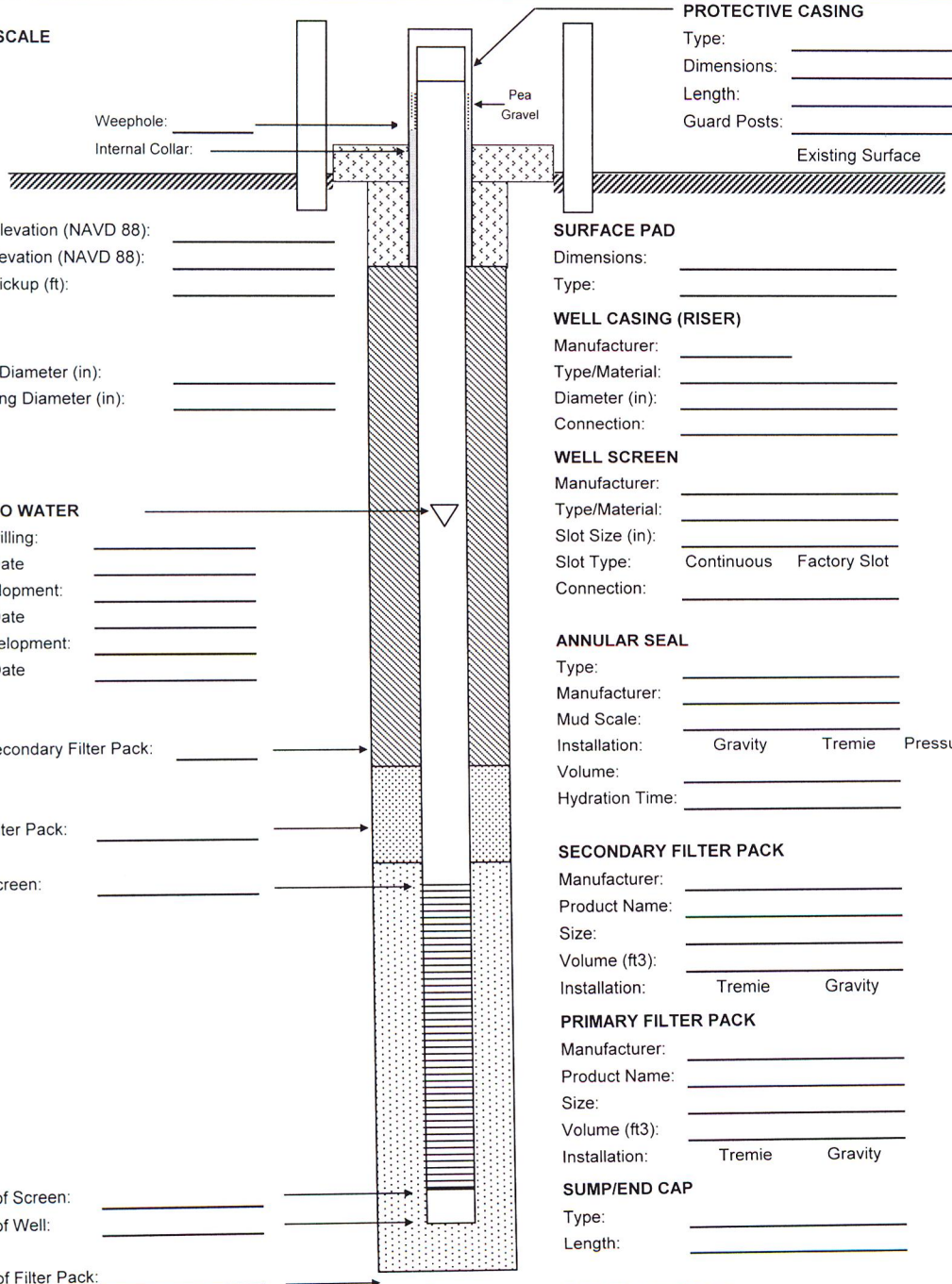

PROTECTIVE CASING
Type: _____
Dimensions: _____
Length: _____
Guard Posts: _____

Surface Elevation (NAVD 88): _____
Casing Elevation (NAVD 88): _____
Casing Stickup (ft): _____

Borehole Diameter (in): _____
Well Casing Diameter (in): _____

DEPTH TO WATER
During Drilling: _____
Date _____
Pre Development: _____
Date _____
Post Development: _____
Date _____

Top of Secondary Filter Pack: _____

Top of Filter Pack: _____

Top of Screen: _____

Bottom of Screen: _____
Bottom of Well: _____

Bottom of Filter Pack: _____

Borehole Depth: _____

SURFACE PAD
Dimensions: _____
Type: _____

WELL CASING (RISER)
Manufacturer: _____
Type/Material: _____
Diameter (in): _____
Connection: _____

WELL SCREEN
Manufacturer: _____
Type/Material: _____
Slot Size (in): _____
Slot Type: Continuous Factory Slot
Connection: _____

ANNULAR SEAL
Type: _____
Manufacturer: _____
Mud Scale: _____
Installation: Gravity Tremie Pressure
Volume: _____
Hydration Time: _____

SECONDARY FILTER PACK
Manufacturer: _____
Product Name: _____
Size: _____
Volume (ft3): _____
Installation: Tremie Gravity

PRIMARY FILTER PACK
Manufacturer: _____
Product Name: _____
Size: _____
Volume (ft3): _____
Installation: Tremie Gravity

SUMP/END CAP
Type: _____
Length: _____

BACKFILL MATERIAL
Type: _____
Volume: _____

Comments:

ATTACHMENT 1-2

CASING/WELL SCREEN TALLY FORM

BHATE
Environmental Engineers and Scientists

CASING TALLY

WELL NUMBER _____

ITEM NO.	DESCRIPTION	LENGTH (FEET)	SCREEN DIAGRAM
			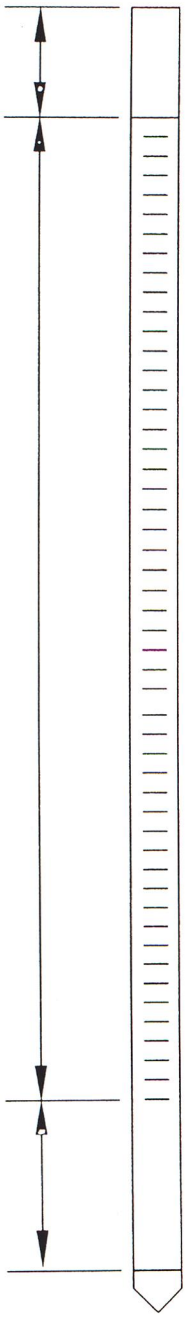

PROJECT NAME: _____ CLIENT: _____

PROJECT NUMBER/PHASE: _____ PROJECT LOCATION: _____

DRILLING MTHD: _____

DATE STARTED: _____ DATE FINISHED: _____ ENGINEER/GEOLOGIST: _____

ATTACHMENT 2-1

WATER LEVEL DATA SUMMARY FORM

BHATE
Environmental Engineers and Scientists

WATER LEVEL DATA SUMMARY

Project Name:	Herington AAF – AOI 203	Date:		Page		of	
Project Number:	9020204	Site Name:		AOI 203			
Field Personnel #1		Field Personnel #2					
Survey Datum (NGVD)		Weather (previous 24 hours):					
Measuring Device							

Well Number	Time (hhmm)	Measuring Point		Depth to Water (ft, TOC)	Elevation of Water (ft, NGVD)
		Description	Elevation (ft, NGVD)		

Notes: NGVD = National Geodetic Vertical Datum
TOC = Top of Well Casing

Comments/Observations:

BHATE
Environmental Engineers and Scientists

WATER LEVEL DATA SUMMARY (Contd.)

Project Name:	Herington AAF – AOI 203	Date:		Page		of	
Project Number:	9020204	Site Name:		AOI 203			

Well Number	Time (hhmm)	Measuring Point		Depth to Water (ft, TOC)	Elevation of Water (ft, NGVD)
		Description	Elevation (ft, NGVD)		

Notes: NGVD = National Geodetic Vertical Datum
TOC = Top of Well Casing

Comments/Observations:

ATTACHMENT 3-1

MONITORING WELL DEVELOPMENT LOG

MONITORING WELL DEVELOPMENT FORM

BHATE
Environmental Engineers and Scientist

Page _____ of _____

LOCATION	Site:	Location ID:	Date:
	Project Name:	Project No./Phase:	Recorded By:
EQUIPMENT	Pump Type/ID#:	Water Quality Meter/ID#:	PID Type/ID#:
	Water Level Indicator Type/ID#:	Other Equipment/ID#:	Decon Method:
	Tubing Type/Diameter (in):	Other Equipment/ID#:	PPE Level: D C B A
WELL INFO	(A) Initial Depth to Water (ft BTOC):	Casing: Type Diam. (in)	Weather:
	(B) Total Well Depth (ft BTOC):	(E) Casing Volume Multiplier (gal/lin ft):	Background PID (ppm):
	(C) Water Column Thickness (ft) (B-A):	Screen Length (lin ft):	Breathing Zone PID (ppm):
	(D) Well Volume (gal) (C x E):	Screen Info: Type: Size:	Well Opening PID (ppm):

CASING INFO											
Riseer/Well Casing Inner Diameter (in)	0.50	1.00	1.50	2.00	3.00	4.00	5.0	6.0	8.0	10
(D) Casing Volume Multiplier(gal/lin ft)	0.02	0.04	0.10	0.16	0.38	0.65	1.02	1.47	2.61	4.08

DATE (mmddyy)	TIME (24 Hr)	Water Level (BTOC)	Volume Removed (gal)	Pumping Rate (gpm)	Temp (C)	pH	Cond. (mS/cm)	Dissolved Oxygen (mg/l)	Turbidity (NTU)	Oxidation Reduction Potential (mV)	Remarks (odor, clarity, etc.)
DEVELOPMENT CRITERIA											
+/- 10% unless otherwise noted					+/- 0.5	+/- 0.1	+/- 25	+/- 0.2	< 50.0	+/- 20	

COMMENTS:

MONITORING WELL DEVELOPMENT FORM

LOCATION	Site: 0.00	Location ID:	Date:
	Project Name: 0.00	Project No./Phase: 0.00	Recorded By:

DATE (mmddyy)	TIME (24 Hr)	Water Level (BTOC)	Volume Removed (gal)	Pumping Rate (gpm)	Temp (C)	pH	Cond. (mS/cm)	Dissolved Oxygen (mg/l)	Turbidity (NTU)	Oxidation Reduction Potential (mV)	Remarks (odor, clarity, etc.)

ATTACHMENT 4-1

FIELD DATA INFORMATION LOG FOR GROUNDWATER SAMPLING

MONITORING WELL SAMPLE COLLECTION FORM

BHATE
Environmental Engineers and Scientist

Page 1 of

LOCATION	Site: AOI 203	Location ID:	Date:
	Project Name: Herington AAF	Project No./Phase: 90202040.00	Recorded By:
EQUIPMENT	Pump Type/ID#:	Water Quality Meter/ID#:	PID Type/ID#:
	Water Level Indicator Type/ID#:	Other Equipment/ID#:	Decon Method:
	Tubing Type/Diameter (in):	Other Equipment/ID#:	PPE Level: D C B A
WELL INFO	(A) Initial Depth to Water (ft BTOC):	Casing: Type Diam. (in)	Weather:
	(B) Total Well Depth (ft BTOC):	(E) Casing Volume Multiplier (gal/lin ft):	Background PID (ppm):
	(C) Water Column Thickness (ft) (B-A):	Screen Length (lin ft):	Breathing Zone PID (ppm):
	(D) Well Volume (gal) (C x E):	Screen Info: Type: Size:	Well Opening PID (ppm):

CASING INFO											
Riseer/Well Casing Inner Diameter (in)	0.50	1.00	1.50	2.00	3.00	4.00	5.0	6.0	8.0	10
(D) Casing Volume Multiplier(gal/lin ft)	0.02	0.04	0.10	0.16	0.38	0.65	1.02	1.47	2.61	4.08

DATE (mmddyy)	TIME (24 Hr)	Water Level (BTOC)	Volume Removed (gal)	Pumping Rate (gpm)	Temp (C)	pH	Cond. (mS/cm)	Dissolved Oxygen (mg/l)	Turbidity (NTU)	Oxidation Reduction Potential (mV)	Remarks (odor, clarity, etc.)

Colorimeter Results					No. Containers/Volume/Type			Preserv.	Filter (Y/N)	Method	Parameter(s)
Time	Analyte	Dilution	Result	Units	3	40 ml	VOAs	HCL	N	8260A	VOCs
					2	1 Liter	Glass Amber	-	N	8270C	SVOCs
					1	250 ml	Plastic	HNO3	N	6010B/7470A	TAL Metals
					2	1 Liter	Glass Amber	-	N	8081A	Pesticides
					3	1 Liter	Glass Amber	-	N	8330	Explosives
					3	40 ml	VOAs	HCL	N	RSK-175	Methane, Ethane, Ethene
Conversions	**Stabilization Criteria**				1	500 ml	Plastic	-	N	300.1	Chloride
1 L = 0.26 gals	Temp	+/- 0.5	DO	+/- 0.2	-	500 ml	Plastic	-	N	300.1	Sulfate
1 gal = 3.79 L	pH	+/- 0.1	Turb	+/- 10	1	500 ml	Plastic	NaOH	N	9030B	Sulfide
	Cond	+/- 25	ORP	+/- 10	1	250 ml	Plastic	-	N	300.1	Nitrate/Nitrite

BHATE
Environmental Engineers and Scientist

Page _____ of _____

LOCATION	Site: AOI 203	Location ID:	Date:

MONITORING WELL SAMPLE COLLECTION FORM

Project Name:	Herington AAF	Project No./Phase:	90202040.00	Recorded By:

DATE (mmddyy)	TIME (24 Hr)	Water Level (BTOC)	Volume Removed (gal)	Pumping Rate (gpm)	Temp (C)	pH	Cond. (mS/cm)	Dissolved Oxygen (mg/l)	Turbidity (NTU)	Oxidation Reduction Potential	Remarks (odor, clarity, etc.)

GEOPROBE® DT325 DUAL TUBE SAMPLING SYSTEM

STANDARD OPERATING PROCEDURE

Technical Bulletin No. MK3138

PREPARED: November, 2006

Collecting soil cores with the DT325 Dual Tube Sampling System.

Geoprobe Systems®

Geoprobe® and Geoprobe Systems®, Macro-Core®, and Direct Image® are Registered Trademarks of Kejr, Inc., Salina, Kansas

©2006 Kejr, Inc.
ALL RIGHTS RESERVED
No part of this publication may be reproduced or transmitted in any form or by any means, electronic or mechanical, including photocopy, recording, or any information storage and retrieval system, without written permission from Kejr, Inc.

1.0 Objective

The objective of this procedure is to collect a representative soil sample at depth through an enclosed casing and recover it for visual inspection and/or chemical analysis.

2.0 Background

2.1 Definitions

Geoprobe®*: A brand name of high quality, hydraulically-powered machines that utilize both static force and percussion to advance sampling and logging tools into the subsurface. The Geoprobe® brand name refers to both machines and tools manufactured by Geoprobe Systems®, Salina, Kansas. Geoprobe® tools are used to perform soil core and soil gas sampling, groundwater sampling and testing, soil conductivity and contaminant logging, grouting, and materials injection.

**Geoprobe® and Geoprobe Systems® are registered trademarks of Kejr, Inc., Salina, Kansas.*

DT325 Dual Tube Sampling System: A direct push system for collecting continuous core samples of unconsolidated materials from within a sealed casing of Geoprobe® 3.25-inch (83 mm) OD probe rods. Samples are collected and retrieved within a sample sheath and liner that is threaded onto the leading end of a string of Geoprobe® 1.25-inch (32 mm) OD light-weight center rods and inserted to the bottom of the outer casing. Collected samples measure up to approximately 2,600 ml in volume in the form of a 1.85-inch x 59-inch (47 mm x 1499 mm) core when using common equipment options.

Liner: A 2.1-inch (53 mm) OD thin-walled, PVC tube that is inserted into the outer casing on the leading end of the inner rod string for the purpose of containing and retrieving core samples. Liners are available in two configurations; a simple open tube or a tube with a core catcher permanently attached to the leading end. Nominal liner lengths include 1 meter, 48 inches, and 60 inches.

***Nominal liner length identifies the length of tools with which the liner is used. The actual end-to-end lengths of the various DT325 liners will differ from the specified nominal lengths.*

Core Catcher: A dome-shaped device positioned at the leading end of a liner to prevent loss of collected soil during retrieval of the liner and soil core. Flexible fingers at the top of the core catcher are pushed outward by soil entering the liner during advancement of the tool string. As the filled liner is subsequently retrieved, the fingers of the core catcher move back inward, effectively closing off the end of the liner and limiting soil loss. The core catcher designed for the DT325 system is made of PETG material and is permanently fused to the liner.

2.2 Discussion

Dual tube sampling gets its name from the fact that two sets of probe rods are used to retrieve continuous soil core samples from the subsurface. One set of rods is driven into the ground as an outer casing (Fig. 2.1). These rods receive the driving force from the hammer and provide a sealed casing through which soil samples may be recovered. The second, smaller set of rods are placed inside the outer casing with a sample liner attached to the leading end of the rod string (Fig. 2.1). These smaller rods hold the liner in place as the outer casing is driven to fill the liner with soil. The inner rods are then retracted to retrieve the full liner.

Standard Geoprobe® 3.25-inch OD probe rods provide the outer casing for the DT325 Dual Tube Soil Sampling System. A cutting shoe is threaded into the leading end of the rod string. When driven into the subsurface, the cutting shoe shears a 1.75- or 1.85-inch OD soil core (depending on cutting shoe option) which is collected inside the casing in a clear plastic liner.

The second set of rods in the DT325 dual tube system are Geoprobe® 1.25-inch OD light-weight center rods. A sample sheath with PVC liner is attached to the end of these smaller rods and then inserted into the casing. The 1.25-inch light-weight center rods hold the sample sheath tight against the cutting shoe as the outer casing is driven to collect the soil core. Once filled with soil, the sample sheath and liner are removed from the bottom of the outer casing by lifting out the 1.25-inch center rod string.

The outer, 3.25-inch probe rods provide a cased hole through which to sample. The main advantage of sampling through a cased hole is that there is no side slough to contend with. In addition, the outer casing effectively seals the probe hole when sampling through perched water tables. These factors mean that sample cross-contamination is eliminated. The DT325 sampling system is therefore ideal for continuous coring in both saturated and unsaturated zones.

Solid Drive Tip

A Solid Drive Tip (28509 or 27763) can be placed on the leading end of the inner 1.25-inch rod string in place of a sample sheath and liner (Fig. 2.2). When installed in the outer casing, the drive tip firmly seats within the cutting shoe and effectively seals the tool string as it is driven into the subsurface. This enables the operator to advance the outer casing to the bottom of a pre-cored hole or through undisturbed soil to reach the top of the sampling interval.

Grouting

The DT325 system allows bottom-up grouting through the primary tool string. This means that a cement or bentonite grout mix can be pumped through the outer casing as it is withdrawn from the ground. This is in contrast to most other soil samplers which require driving a second set of tools back down the probe hole in order to deliver the grout mix.

Monitoring Well Installation

An expendable cutting shoe enables the operator to install a Geoprobe® prepacked screen monitoring well through the outer casing of the DT325 Dual Tube System. After the collection of continuous soil cores to the desired depth, prepacked screens can be inserted to the bottom of the outer casing on the leading end of a PVC riser string. The well is finished, complete with grout barrier, bentonite well seal, and a high-solids bentonite slurry/neat cement grout, during retrieval of the outer casing.

Groundwater and Soil Gas Profiling

The DT325 system can be combined with a simple screen to conduct vertical profiling of groundwater or soil gas quality through the leading end of the outer casing. Utilizing the Geoprobe® Groundwater Profiler (Geoprobe® 2003) with the DT325 system provides access to groundwater or soil gas (Geoprobe® 2006) at multiple depths in a single push. In addition, hydraulic conductivity testing may be performed through the groundwater profiler tool string with the Geoprobe® Pneumatic Slug Test Kit (Geoprobe® 2005).

A DT325 Drivable Profiler Head (21379) adapts the groundwater profiler to the inner 1.25-inch rod string of the DT325 system. The profiler head is machined to fit within the DT325 cutting shoe. An O-ring on the profiler head provides a watertight seal to prevent groundwater flow into the outer casing when conducting slug tests through the groundwater profiler screen.

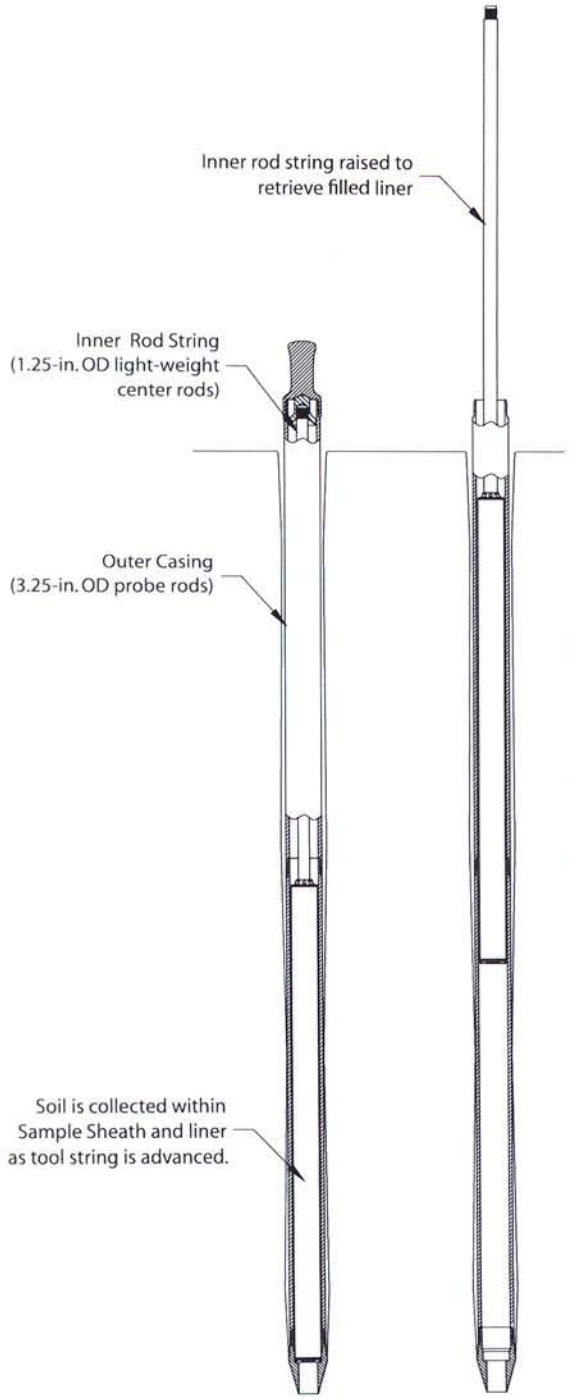

Figure 2.1
Outer casing driven with sample sheath and liner.

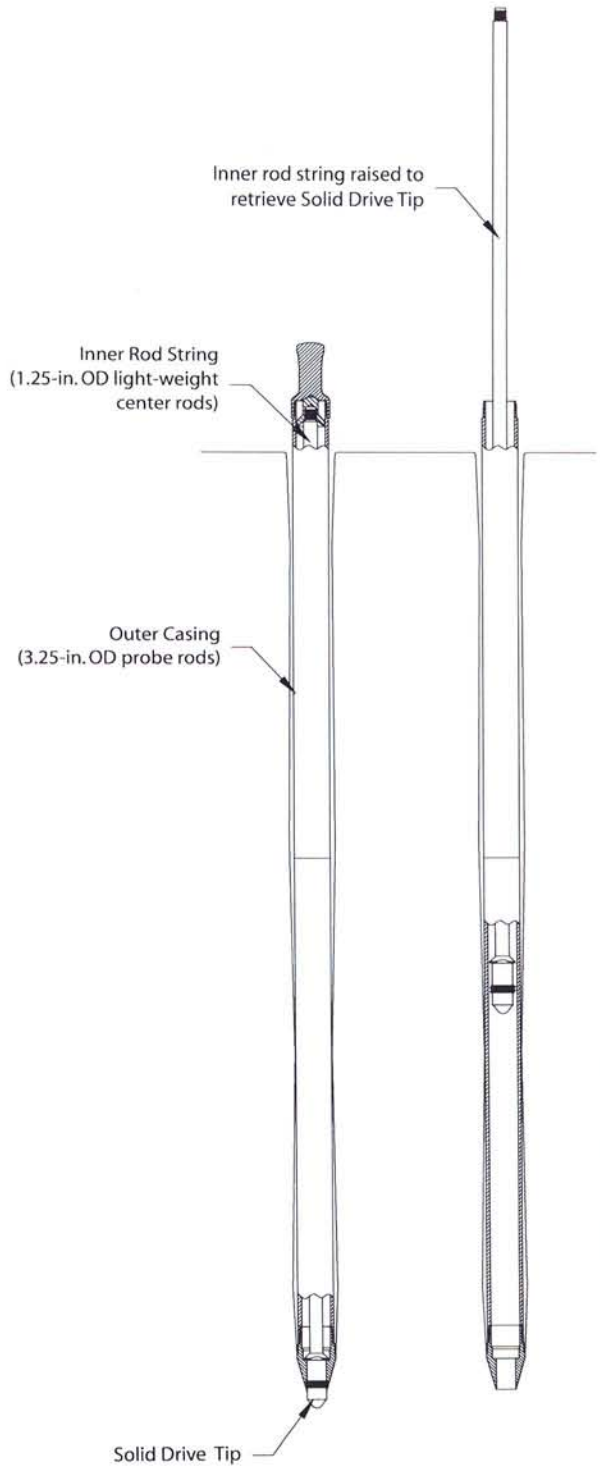

Figure 2.2
Outer casing driven with solid drive tip.

3.0 Tools and Equipment

The following equipment is required to operate the DT325 Dual Tube Sampling System. Refer to Figure 3.1 for identification of the specified parts.

DT325 Sampler Parts*	Quantity	Part Number
DT325 Sheath Drive Head	-1-	10212
DT325 Sample Sheath, 72-in. length	-1-	26805
DT325 Sample Sheath, 60-in. length	-1-	26719
DT325 Sample Sheath, 48-in. length	-1-	27711
DT325 Sample Sheath, 1-m length	-1-	27712
DT325 Cutting Shoe, standard, 1.85-in. ID	-1-	28508
DT325 Cutting Shoe, optional, 1.75-in. ID	-1-	26720
DT325 Expendable Cutting Shoe Holder	-1-	28339
DT325 Expendable Cutting Shoe, 1.75-in. ID	-1-	28341
DT325 Solid Drive Tip, for standard (28508) cutting shoe	-1-	28509
DT325 Solid Drive Tip, for optional cutting shoe (28341) and expendable cutting shoe (26720)	-1-	27763
Replacement O-rings, for DT325 solid drive tips (28509 and 27763), pkg. of 25	Variable	13942
DT325 Liner Retainer	-1-	26718
O-rings, for DT325 liner retainer (26718), pkg. of 25	Variable	28379
DT325 Liner Retainer, without O-ring groove	-1-	31039
DT325 Liner Retainer Wrench	-1-	27838

DT325 Liners and Accessories	Quantity	Part Number
DT325 Liner Spacer, pkg. of 21	Variable	29609K
DT325 Liner Spacer Head	-1-	29358
DT325 PVC Liner, 60-in. length, box of 43	Variable	DT3260K
DT325 PVC Liner, 48-in. length, box of 43	Variable	DT3248K
DT325 PVC Liner, 1-m length, box of 43	Variable	DT3239K
DT325 PVC Liner with Core Catcher, 60-in. length, box of 43	Variable	27813
DT325 PVC Liner with Core Catcher, 48-in. length, box of 43	Variable	27814
DT325 PVC Liner with Core Catcher, 1-m length, box of 43	Variable	27815
DT325 Vinyl End Caps, pkg. of 84 (42 pair)	Variable	17762
DT325 Liner Cutter	-1-	26155
Universal Liner Holder	-1-	22734

Probe Rods and Accessories*	Quantity	Part Number
GH60 Threadless Drive Cap, 3.25-in. rods**	-1-	9742
Pull Cap, 3.25-in. rods	-1-	13257
Probe Rod, 3.25-in. OD x 60-in. length	Variable	9040
Probe Rod, 3.25-in. OD x 48-in. length	Variable	10594
Probe Rod, 3.25-in. OD x 1-m length	Variable	13925
Probe Rod, 3.25-in. OD x 12-in. length	-1-	13672
Replacement O-rings, for 3.25-in. probe rods, pkg. of 25	Variable	9960
Centering Drive Cap, 1.25-in. rods	-1-	12943
Pull Cap, 1.25-in. rods	-1-	AT1204
Light-Weight Center Rod, 1.25-in. OD x 60-in. Length***	Variable	27600
Light-Weight Center Rod, 1.25-in. OD x 48-in. Length***	Variable	21900
Winch Pull Plate, 1.5-in. rods (also works with 1.25-in. OD rods)	-1-	18274
Adjustable Rod Clamp	-1-	27216

Optional Accessories	Quantity	Part Number
DT325 Adapter for Hydraulic Liner Extruder	-1-	24959
DT325 Plunger for Hydraulic Liner Extruder	-1-	23977
Rod Grip Handle, GH60 Hammer, 3.25-in. rods	-1-	9757
Rod Grip Handle, GH60 Hammer, 1.5-in. and 1.25-in. rods	-1-	15554
Rod Wiper Donuts, 3.25-in. Rods	-1-	27194
Rod Wiper Weldment	-1-	23633

* Select DT325 Sample Sheath and liner lengths to match length of probe rods.
** A 3.25-inch probe rod drive cap is also available for use with GH40 Series hammers.
*** 1.25-inch OD probe rods may be substituted for Light-Weight Center Rods.

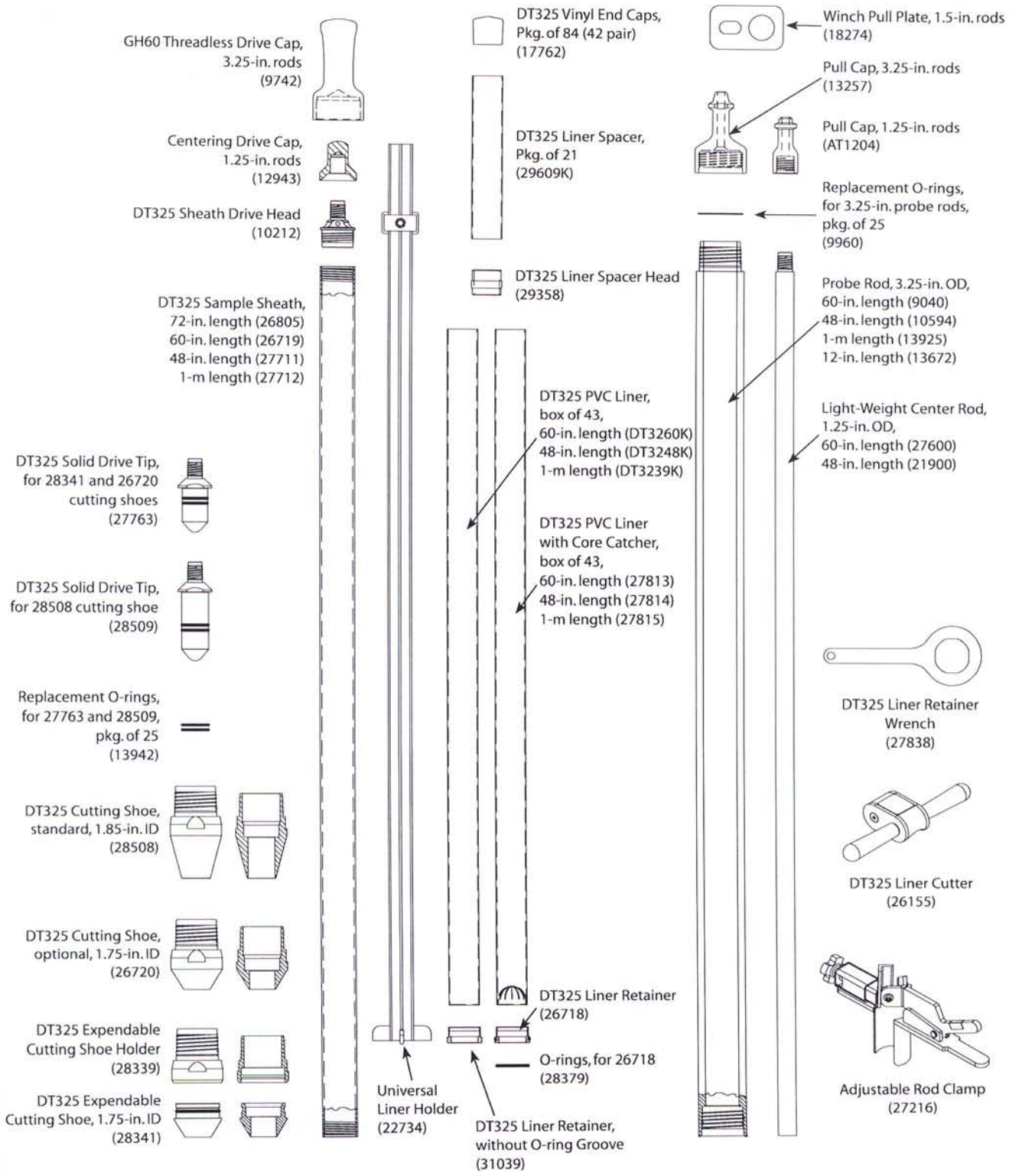

Figure 3.1
DT325 parts and accessories.

3.1 Tool Options

This section identifies the specific tool options available for use with the DT325 Dual Tube System. Refer to Figure 3.1 for illustrations of the specified parts.

Probe Rods

Standard Geoprobe® 3.25-inch (83-mm) OD probe rods are utilized for the outer casing of the DT325 Sampling System. Nominal rod lengths include 1 meter, 48 inches, and 60 inches. The specific length of rods may be selected by the operator and will determine the length of tooling for the rest of the DT325 system.

1.25-inch Light-Weight Center Rods

1.25-inch Light-weight center rods (1.25-inch / 32-mm OD) are recommended for the inner rod string of the DT325 system when utilizing an outer casing of 48- or 60-inch long rods. Choose the light-weight rod length that matches the length of rods used for the outer casing (48-inch light-weight rods with 48-inch outer casing, etc.). Currently, 1.25-inch light-weight center rods are not available in 1-meter lengths. Standard Geoprobe® 1.25-inch x 1-meter probe rods must be used with 3.25-inch x 1-meter outer casing.

A weight reduction of up to 64% is provided by the 1.25-inch light-weight center rods over standard 1.25-inch probe rods. As a result, considerably less energy is expended when retrieving the light-weight center rods from within the outer casing during operation of the DT325 Dual Tube System.

Sample Sheaths

A steel sample sheath supports the weight of the inner rods to protect the sample liner from damage while advancing the DT325 tool string. The liner is placed within the sheath and secured with a drive head at the top of the sheath and a liner retainer at the bottom. The assembled sheath with liner is inserted to the bottom of the outer casing on the leading end of the inner rod string (light-weight rods). After advancing the entire tool string one sample interval, the inner rods and sample sheath are retrieved to recover the soil core.

Sample sheaths are available in nominal lengths of 1 meter, 48 inches, 60 inches, and 72 inches. Sample sheath length is generally matched to the length of the probe rods selected for the outer casing. However, a DT325 Liner Spacer (29609K) and DT325 Liner Spacer Head (29358) allow use of 48-inch liners with a 60-inch Sample Sheath (26719) and 60-inch liners with a 72-inch Sample Sheath (26805).

Sample Liners

Sample liners are made of a heavy-duty clear PVC for convenient inspection of the soil sample. Liners are available either as a simple, open tube or with an intergral core catcher. Utilize the core catcher liners when sampling flowing sands, noncohesive soils, extremely dry soils, or any other materials that fall from the liner during retrieval.

Nominal liner lengths include 1 meter, 48 inches, and 60 inches with an OD of 2.1 inches (53 mm). Under "normal" sampling conditions, liner length should correspond to the length of probe rods used for the outer casing. Certain sampling conditions can cause over-filled liners which may lead to problems removing the liner and soil core from the sample sheath. For these special conditions, utilize a Liner Spacer (29609K) and DT325 Liner Spacer Head (29358) to provide additional room above the liner for the excess soil (Fig. 3.2). The liner spacer and liner spacer head must be used with either a 48-inch liner in a 60-inch Sample Sheath (26719) or a 60-inch liner in a 72-inch Sampler Sheath (26805). With the tool string only advanced the length of the liner, the liner spacer remains free to accept excess soil that may otherwise overfill the liner.

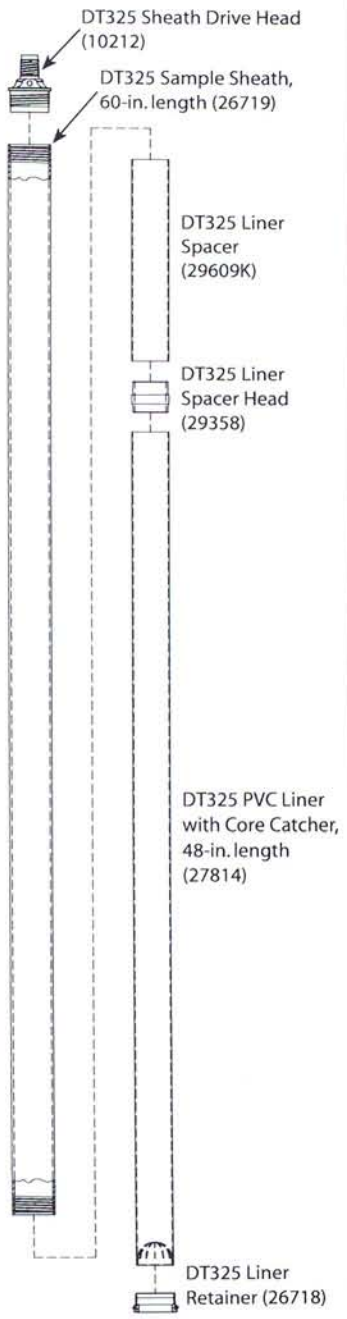

Figure 3.2
Common tooling configuration for use of DT325 Liner Spacer.

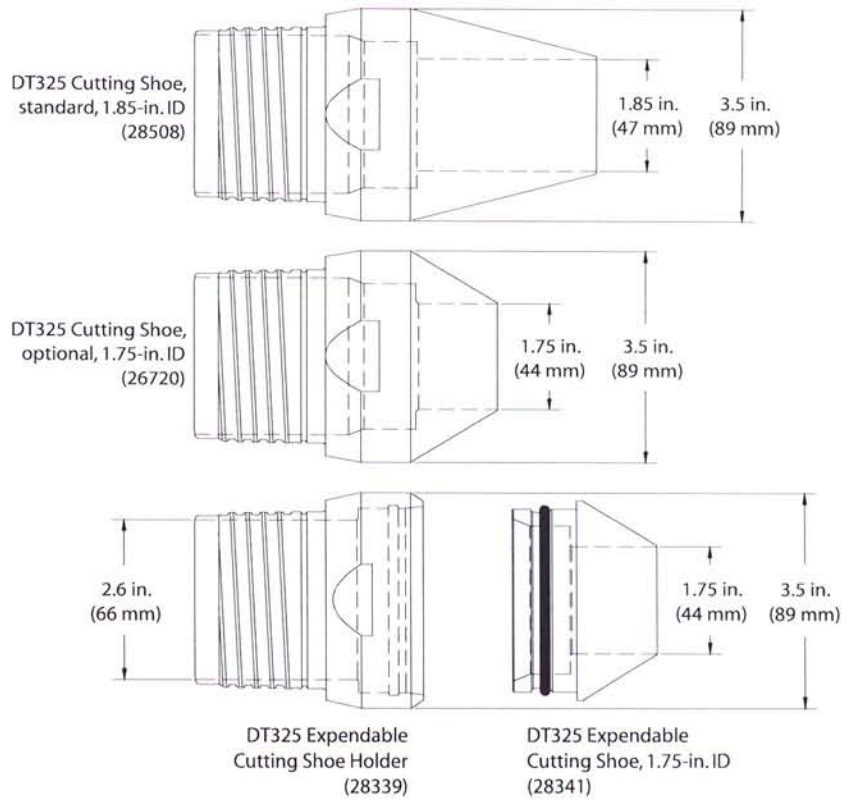

Figure 3.3
Cutting shoe options for the DT325 Dual Tube Sampling System.

Cutting Shoes

Three cutting shoes are available for use with the DT325 Dual Tube System (Fig. 3.3). The DT325 Standard Cutting Shoe (28508) and DT325 Optional Cutting Shoe (26720) thread into the leading end of the 3.25-inch probe rods and are recovered after sampling. Dimensions for the standard cutting shoe are 1.85 inches (47 mm) ID and 3.5 inches (89 mm) OD. The optional cutting shoe also has an OD of 3.5 inches (89 mm), but the ID is only 1.75 inches (44 mm). The standard cutting shoe is ideal for sampling plastic clays and saturated sands while the optional cutting shoe is designed for use in formations where a smaller-diameter soil core is beneficial to sample recovery.

The DT325 sampling system may also employ an expendable cutting shoe (Fig. 3.3). In this arrangement, a DT325 Expendable Cutting Shoe Holder (28339) is threaded into the leading end of the outer casing. A DT325 Expendable Cutting Shoe (28341) is then inserted into the holder. Upon completion of soil sampling, the outer casing is withdrawn slightly. The expendable cutting shoe is knocked from the holder, leaving an open casing through which a prepacked screen monitoring well may be installed. Dimensions for the expendable cutting shoe are the same as the optional cutting shoe (ID = 1.75 in. (44 mm) and OD = 3.5 in. (89 mm)).

4.0 Operation

4.1 Decontamination

Before and after each use, thoroughly clean all parts of the soil sampling system according to project requirements. Parts should also be inspected for wear or damage at this time. During sampling, a clean new liner is used for each soil core.

4.2 Operational Overview

The DT325 Soil Sampling System is designed to collect continuous soil cores. Sampling may begin either from ground surface or a predetermined depth below ground. Once sampling begins, consecutive soil cores are removed as the outer casing is advanced to greater depths

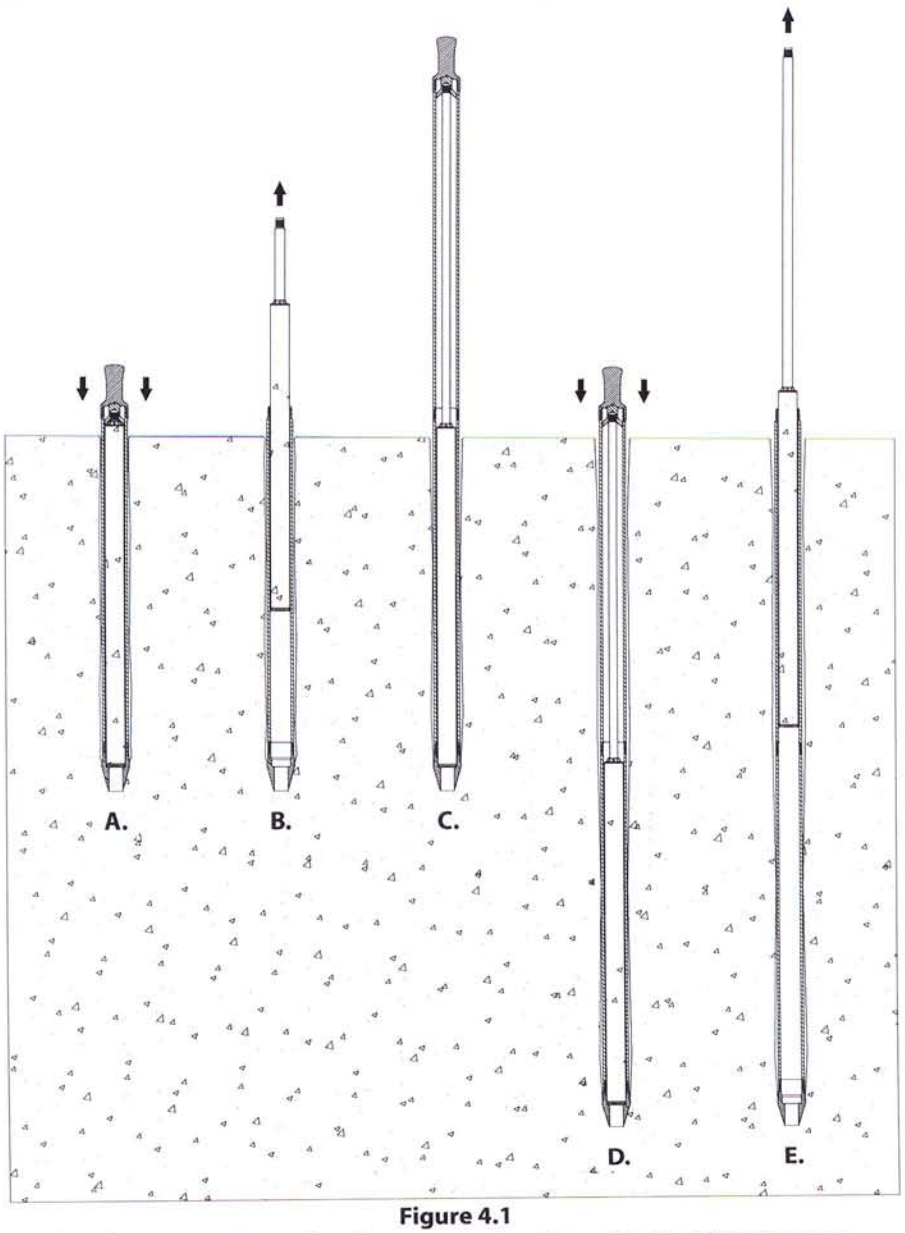

Figure 4.1
Continuous core sampling from ground surface with the DT325 system.

When sampling is to begin at the ground surface, the first soil core is generally collected using a liner with core catcher to maximize sample recovery (Fig. 4.1-A). This is especially true when the first core is composed of dry, loose soil. Upon retrieval of the first liner and soil core (Fig. 4.1-B), a new liner is loaded into the sample sheath and inserted to the bottom of the outer casing on the end of an inner rod. A section of outer casing is added to the tool string (Fig. 4.1-C) and the entire tool string is driven to fill the liner with soil (Fig. 4.1-D). The sample sheath and filled liner are removed from the outer casing to retrieve the second soil core (Fig. 4.1-E). A new liner is placed in the sample sheath and the process is repeated for the entire sampling interval.

When the sampling interval begins at some depth below ground surface, a DT325 Solid Drive Tip is installed in the outer casing and the entire assembly is driven from ground surface directly through undisturbed soil (Fig. 4.2-A). This enables the operator to reach the top of the sampling interval without stopping to remove unwanted soil cores. Once the interval is reached, the solid drive tip is removed (Fig 4.2-B) and sampling continues as described in the preceding paragraphs (Fig. 4.2-C, Fig. 4.2-D, and Fig. 4.2-E).

Specific instructions for assembly and operation of the DT325 Sampling System are given in the following sections.

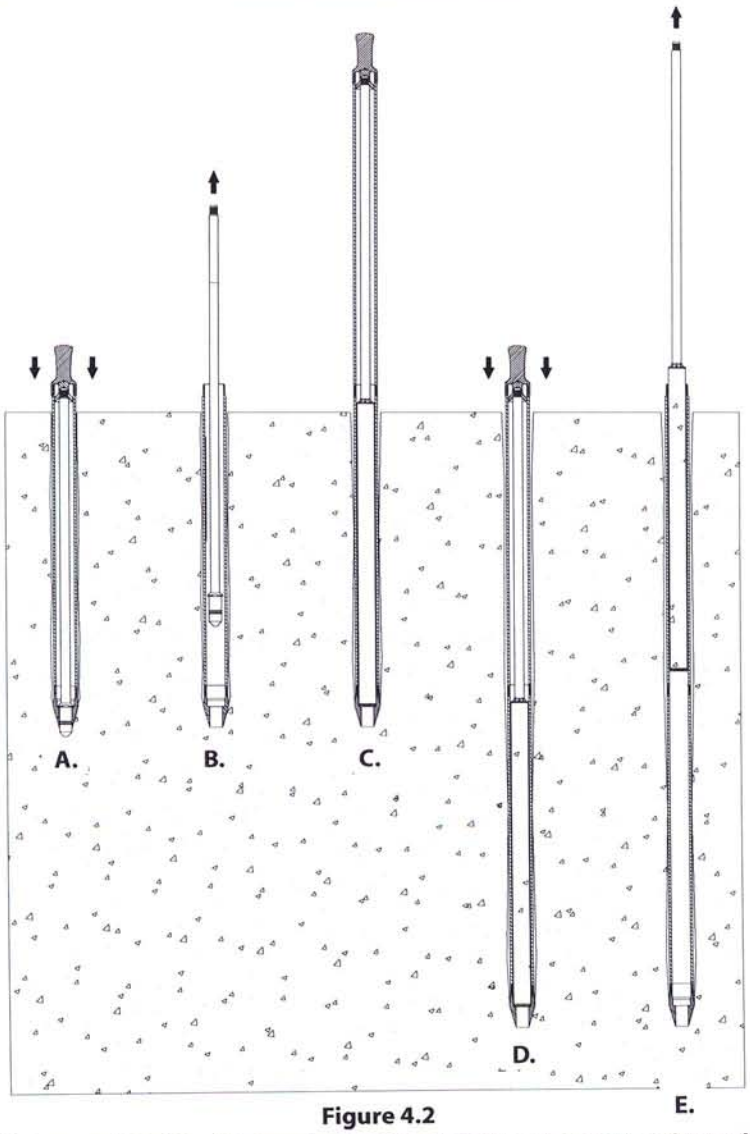

Figure 4.2

Using a solid drive tip to advance the DT325 outer casing through undisturbed soil before collecing soil cores.

4.3 Assembling and Driving the Outer Casing Using a DT325 Solid Drive Tip

A solid drive tip enables the operator to advance the outer casing to the bottom of a pre-cored hole or through undisturbed soil to reach the top of the sampling interval. The outer casing is assembled first, followed by the 1.25-in. light-weight center rod system with a solid drive tip. Step by step instructions are listed below.

1. When using a DT325 Standard (28508) or Optional (26720) Cutting Shoe, install an O-ring (9960) at the base of the theads as shown in Figure 4.3. If using an expendable cutting shoe, install an O-ring (9960) on the DT325 Expendable Cutting Shoe Holder (28339) and one o-ring (6834) on the DT325 Expendable Cutting Shoe (28341).

2. Thread the DT325 Cutting Shoe or DT325 Expendable Point Holder onto the leading end of a 3.25-inch OD Probe Rod. Completely tighten the cutting shoe or cutting shoe holder using a pipe wrench.

3. Install an O-ring (13942) in both grooves of the DT325 Solid Drive Point (27763 or 28509).

4. Thread the solid drive point into the female end of a 1.25-inch light-weight center rod.

5. Lubricate the O-rings on the solid drive point with a small amount of deionized water. Insert the point and probe rod into the outer casing until the point partially extends from the bottom of the cutting shoe.

6. Place a Centering Drive Cap (12943) on top of the 1.25-inch light-weight center rod and a GH60 Threadless Drive Cap (9742) onto the 3.25-inch probe rod (outer casing) as shown in Figure 4.5.

7. Raise the probe unit hammer assembly to its highest position by fully extending the probe cylinder.

8. Position the assembled outer casing section directly under the hammer with the cutting shoe centered between the toes of the probe foot. The assembled outer casing section should now be parallel to the probe derrick. Step back from the unit and visually check sampler alignment. A magnetic level can be placed on the assembly to check level.

9. Apply static weight and hammer percussion to advance the assembled outer casing until the drive head reaches the ground surface.

   NOTE: Activate hammer percussion whenever collecting soil. Percussion helps shear the soil at the leading end of the sampler so that it moves into the sample tube for increased recovery.

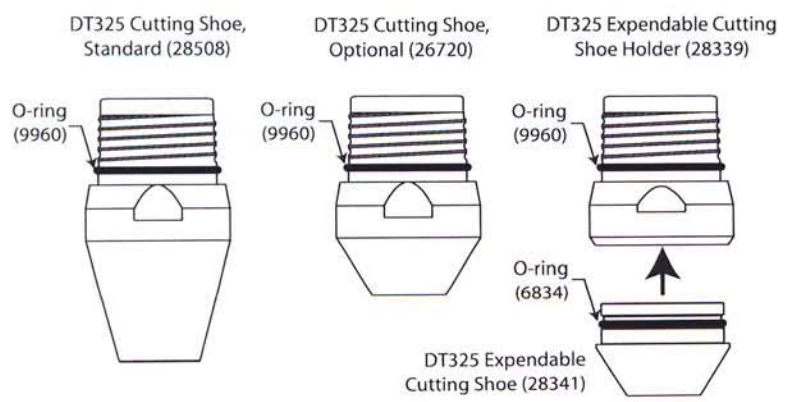

Figure 4.3
DT325 Cutting Shoes Utilize O-ring Seals

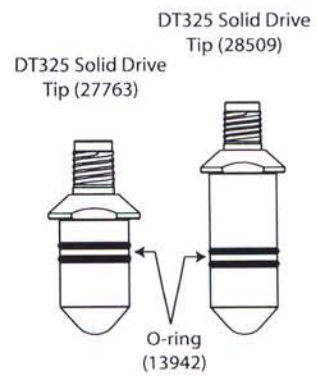

Figure 4.4
Solid Drive Points Utilize Two O-rings

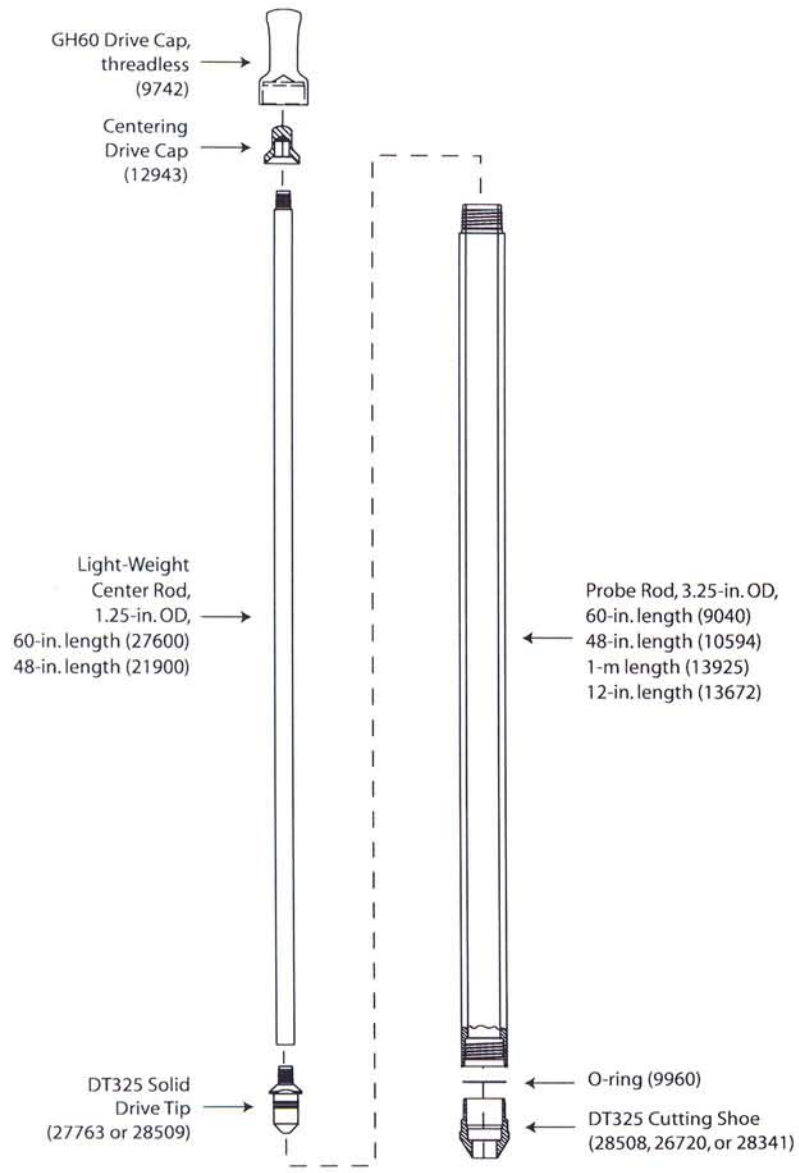

Figure 4.5
Assembly Using the DT325 Solid Drive Tip

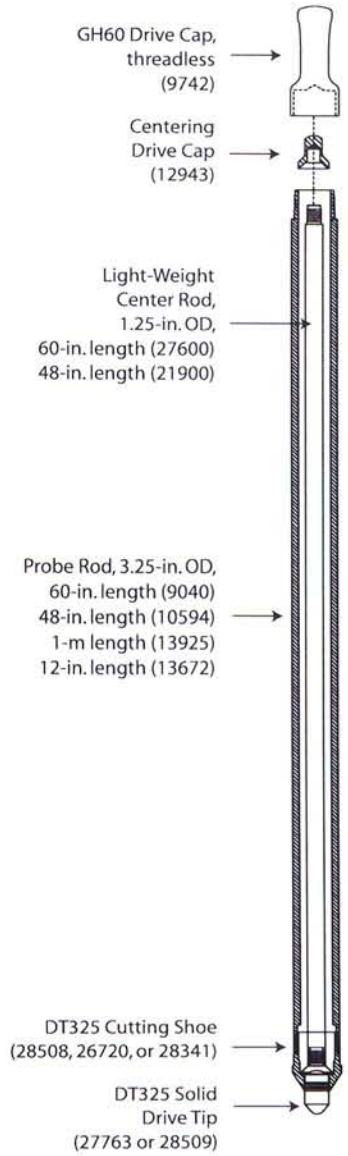

Figure 4.6
Completed Assembly

10. Raise the hammer assembly a few feet and retract the unit to provide access to the top of the outer casing assembly.

11. Remove the centering drive cap and 3.25-inch drive cap.

12. Add additional 1.25-inch light-weight center rods and 3.25-in. probe rods until the sampling interval is reached. At this point, the inner rods can be removed and an assembled sample sheath can be added (See Section 4.4)

4.4 Assembling the Sample Sheath

The sample sheath is used to support the weight of the 1.25-inch light-weight center rods and to protect the liner from damage while advancing the DT325 tool string. The process of assembling the sheath to collect soil samples is given below.

1. Place an O-ring onto the DT325 Liner Retainer. Note: No O-ring is needed for retainer 31039.
2. Slide the retainer ring onto the leading end of the liner. (Fig. 4.7).
3. Place the liner and retainer ring into either end of the sampler sheath (Fig. 4.8).
4. Thread the retainer ring onto the sample sheath. If the tools are clean, it should easily thread on easily by hand (Fig. 4.9).
5. On the opposite end of the sheath, thread on the DT325 Sheath Drive Head. The drive head will connect the sheath to the 1.25-inch light-weight center rods.

Figure 4.7. The retainer ring is placed on the end of the liner.

Figure 4.8. The liner and spacer ring are slid into the sample sheath.

Figure 4.9. Tighten the retainer ring by hand.

The sample sheath is now ready for soil core collection (Section 4.5).

4.5 Soil Core Collection

This section describes collection of continuous soil core samples from within the sealed outer casing of the DT325 Dual Tube Sampling System. The procedure is written for a sampling series that begins at the ground surface. Refer to Figure 4.10 for an illustration of the assembled sampler.

1. When using a DT325 Standard (28508) or Optional (26720) Cutting Shoe, install an O-ring (9960) at the base of the theads as shown in Figure 4.3. If using an expendable cutting shoe, install an O-ring (9960) on the DT325 Expendable Cutting Shoe Holder (28339) and one o-rings (6834) on the DT325 Expendable Cutting Shoe (28341).
2. Thread the DT325 Cutting Shoe or DT325 Expendable Point Holder onto the leading end of a 3.25-inch OD Probe Rod (Fig. 4.11). Completely tighten the cutting shoe or cutting shoe holder using a pipe wrench.
3. Insert the sample sheath assembly into the 3.25-inch OD probe rod.

4. Place a Centering Drive Cap (12943) on top of the DT325 Drive Head (Fig. 4.12) and a GH60 Threadless Drive Cap (9742) onto the 3.25-inch probe rod (outer casing, Fig. 4.13).

5. Raise the hydraulic hammer to its highest position by fully extending the probe cylinder.

6. Position the DT325 Sampler directly under the hammer with the cutting shoe centered between the toes of the probe foot (Fig. 4.14). The sampler should now be parallel to the probe derrick. Step back from the unit and visually check sampler alignment. A magnetic level can be placed on the assembly to check level.

7. Apply static weight and hammer percussion to advance the sampler unit until the drive head reaches the ground surface.

   NOTE: Activate hammer percussion whenever collecting soil. Percussion helps shear the soil at the leading end of the sampler so that it moves into the sample tube for increased recovery.

8. Raise the hammer assembly a few feet and retract the unit to provide access to the top of the sampler.

9. Remove the drive cap and thread an additional 1.25-inch light-weight center rod onto the center string. Place the adjustable rod clamp on the top of the 3.25-inch rods to keep the center rods from falling when they are removed (Fig. 4.15).

10. Pull up the 1.25-inch light-weight center rod string along with the sample tube (Fig. 4.16).

    To sample consecutive soil cores, advance a clean sample sheath and liner down the previously opened hole to the top of the next sampling interval. Add 1.25-inch light weight center rods as the sample sheath is lowered into the opened hole. An additional 1.25-inch light-weight center rod and 3.25-inch probe rod should be added. Drive the tool string the length of the sampler to collect the next soil core. Proceed to Section 4.6 for instructions on recovering the soil core from the sample sheath.

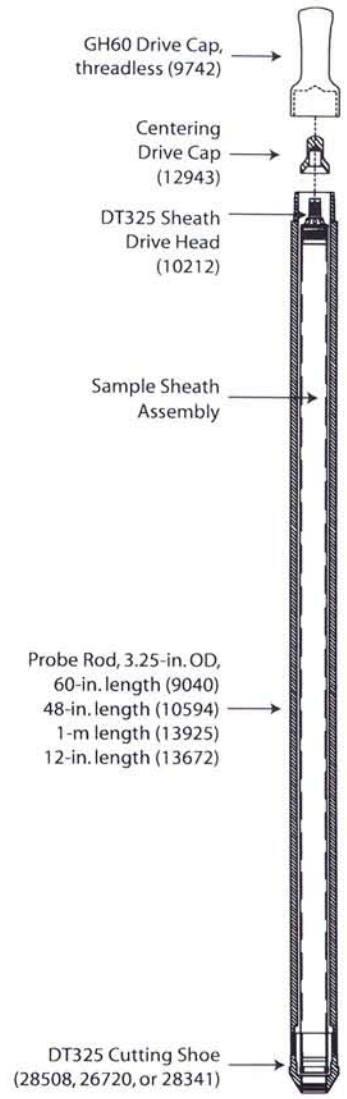

Figure 4.10
Assembled DT325 Sampler

Figure 4.11. The cutting shoe is threaded onto the 3.25-inch probe rod.

Figure 4.12. A centering drive cap is placed on the DT325 Drive Head.

Figure 4.13. Place the threadless drive cap on the 3.25-inch probe rod.

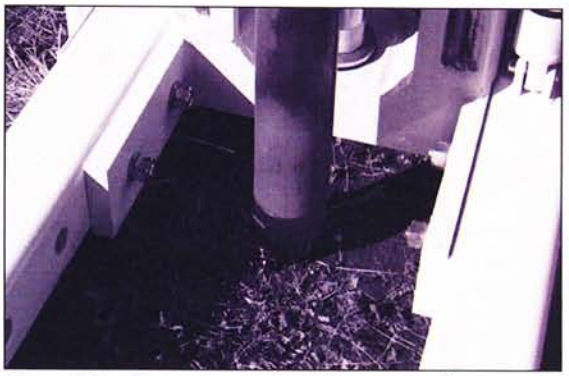

Figure 4.14. The probe rod should be centered between the toes of the probe foot.

Figure 4.15. The adjustable rod clamp can be used when retrieving the sample.

Figure 4.16. The 1.25-inch light-weight center rods are pulled along with the sample tube.

4.6 Removing Filled Liner from the Sample Sheath

Place the sample tube into the vise. The liner retainer wrench can be used to remove the DT325 Liner Retainer and liner from the sample sheath. If possible, the retainer can be removed by hand (Fig. 4.17). The wrench can be used to gently knock off the retainer if necessary (Fig. 4.17). With the retainer removed, the liner and core can be withdrawn from the sample tube. A Hydraulic Liner Extruder is also available for mounting on your machine to remove liners (Fig. 4.19).

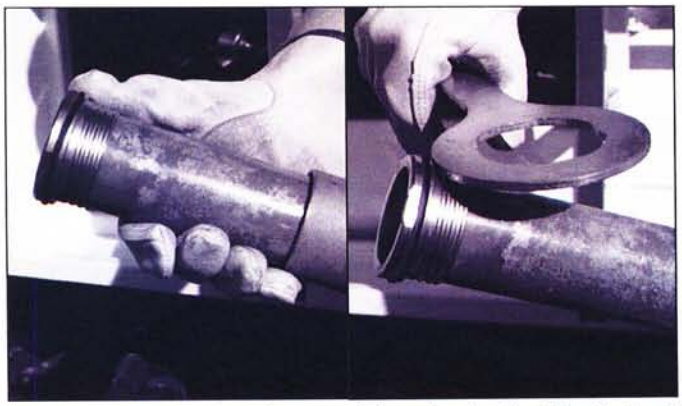

Figure 4.17. The retainer is removed from the sheath, either by hand or with the retainer wrench. Gently tap the retainer with the wrench to remove it from the liner.

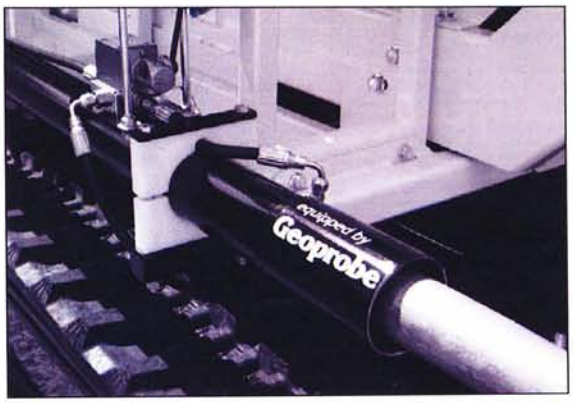

Figure 4.18. The Hydraulic Liner Extruder helps remove the liner.

4.7 Removing a Section of Liner with a DT325 Liner Cutter

The liner and core can be placed on the Universal Liner Holder. Use the DT325 Liner Cutter to safely expose the sample. Begin the cut at the opposite end of the core catcher (Fig. 4.19). It is a little thinner plastic, which makes it easier to begin the cut. Using both hands, smoothly pull the cutter through the liner. The slit liner can be removed and the core is exposed (Fig. 4.20).

Figure 4.19. The DT325 Liner Cutter is used to safely make a longitudinal cut on the sample.

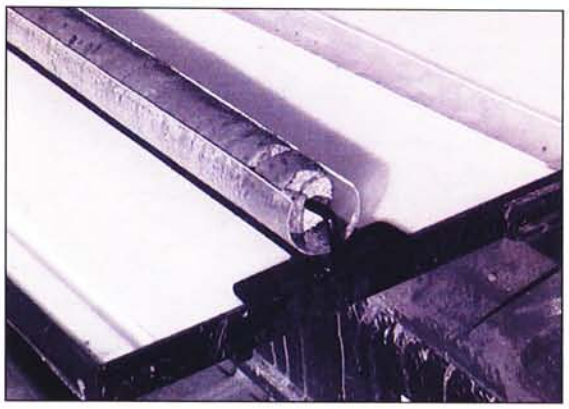

Figure 4.20. The core is exposed by the DT325 Liner Cutter.

4.8 Dual Tube Soil Sampling Tips

Saturated sands are the most difficult formations to sample with the DT325 system. Saturated conditions place positive pressure on the soil outside of the outer casing. When sampling in noncohesive formations (e.g. sands) below the water table, it may be necessary to add water to the outer casing to prevent formation heave. Adding water to the probe rods puts a positive head on the system and may keep formation material from flowing into the rods as the liner and soil sample are retracted. If a small amount of formation material is still drawn into the outer casing as the soil core is retrieved, the material may be displaced by slightly raising the outer casing while lowering the next new liner to depth. Water must be maintained within the outer casing during this process to overcome the hydraulic head imparted by the formation fluid. When retrieving, pull back the sample slowly.

DT325 core catcher liners will help considerably with sample recovery in non-cohesive soils and other materials that do not fill the liner diameter. Core catcher liners are not recommended for cohesive or expansive soils as the core catchers may actually inhibit soil movement into the liner. Also, using a shorter sample interval may improve sample recovery by minimizing wall friction as the material is sampled.

Certain soils have a tendency to exhibit plastic flow or extrusion characteristics. Allowing additional space for these materials will increase the speed of sampling because less time is spent cleaning overfilled sample sheaths. This will also yield a more representative sample. Using a sheath that is a foot or two longer than the sampling interval or using a shorter sample interval (under driving) can create a buffer zone. The DT325 Liner Spacer and Spacer Head were designed for these situations.

Some clay materials will extrude during sampling. Under these conditions, using a shorter sample interval (24-inch liners) may improve sample recovery by minimizing the wall friction as the material is sampled.

It is recommended that O-rings be used no the cutting shoe and liner retainer when sampling in clays. If they are not used, clay may build up between the sample sheath and the outer casing. It is not necessary to use o-rings in saturated sands and anytime water is present.

It may be helpful to mark the first 1.25-inch light-weight center rod attached to the sheath as an indicator that the sheath is next in line.

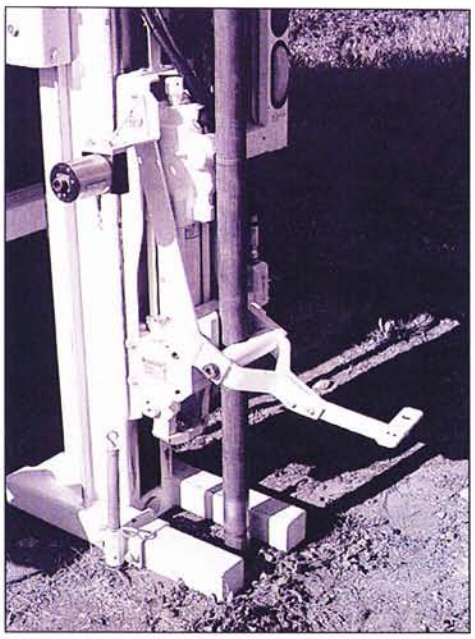

Figure 4.21. Outer casing may be retrieved with a pull cap or rod grip pull system if the probe hole is sealed with granular bentonite.

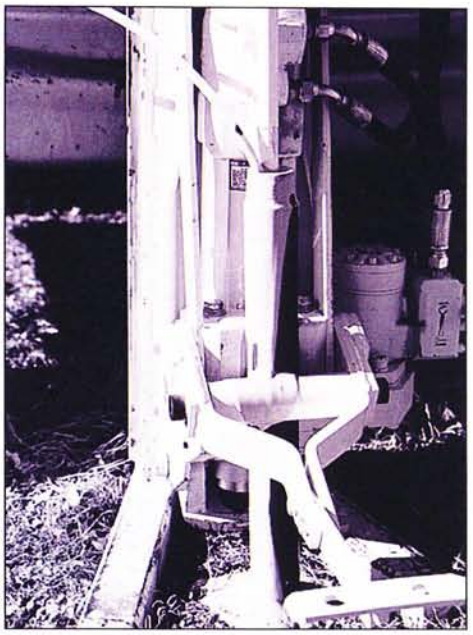

Figure 4.22. A grout machine and flexible tubing allow bottom-up grouting as the outer casing is retrieved.

4.9 Outer Casing Retrieval

The outer casing of the DT325 Dual Tube System may be retrieved in one of three ways:

1. Casing pulled then probe hole sealed from ground surface with granular bentonite.

   The outer casing may be pulled from the ground with the probe machine and a Pull Cap (13257) or a Rod Grip Pull System (for GH40 Hammers [12235] or for GH60 Hammers [9757]) if the probe hole is to be sealed with granular bentonite from the ground surface (Fig. 4.21). This method is used for shallow probe holes in stable formations only. Such conditions allow the entire probe hole to be sealed with granular bentonite.

2. Casing pulled with probe hole sealed from bottom-up during retrieval.

   Bottom-up grouting should be performed during casing retrieval in unstable formations where side slough is probable. Such conditions create void spaces in the probe hole if granular bentonite is installed from the ground surface.

   A GS500 or GS1000 Grout Machine is used to deliver a sealing material (high-solids bentonite slurry or neat cement grout) to the bottom of the outer casing through flexible tubing. The grout mix is pumped through the tubing to seal the void remaining as the outer casing is retrieved (Fig. 4.22). This is an advantage of the DT325 Dual Tube Sampling System as other soil samplers require a second set of tools to deliver grout to the bottom of the probe hole. Contact Geoprobe Systems® for more information on bottom-up grouting with the GS500 and GS1000 Grout Machines.

3. Casing pulled with Geoprobe Prepacked Screen Well installed during retrieval.

   The final option is to install a 2.5-inch OD Geoprobe® Prepacked Screen Monitoring Well in the probe hole during retrieval of the outer casing. A DT325 Expendable Cutting Shoe Holder (28339) and a DT325 Expendable Cutting Shoe (28341) allow the operator to collect continuous soil cores as the outer casing is driven to depth.

Figure 4.23. Geoprobe® prepacked screens may be installed through the outer casing when an expendable cutting shoe is used.

When sampling is complete, the outer rods are raised and the expendable cutting shoe is removed from the leading rod. This leaves an open casing through which a set of prepacked screens is lowered on the leading end of a PVC riser string. The well is finished, complete with grout barrier, bentonite well seal, and a high-solids bentonite slurry/neat cement grout, during retrieval of the outer casing.

Refer to Geoprobe® 0.5-in. x 1.4-in. OD and 0.75-in. x 1.4-in. OD Prepacked Screen Monitoring Wells Standard Operating Procedure (Geoprobe® Technical Bulletin No. 962000) for specific information on well installation.

5.0 References

Geoprobe Systems®, 2003. *Tools Catalog, V. 6.*

Geoprobe Systems®, 2005. *Standard Operating Procedure. Geoprobe@ Pneumatic Slug Test Kit. Technical Bulletin No. 19344.*

Geoprobe Systems®, 2006. *Direct Push Installation of Devices for Active Soil Gas Sampling and Monitoring. Technical Bulletin No. MK3098.*

Geoprobe Systems®, 2006. *Standard Operating Procedure. 1.0-in. x 2.5-in. OD and 1.5-in. x 2.5-in. OD Prepacked Screen Monitoring Wells. Geoprobe® Technical Bulletin No. 962000.*

Equipment and tool specifications, including weights, dimensions, materials, and operating specifications included in this brochure are subject to change without notice. Where specifications are critical to your application, please consult Geoprobe Systems®.

Geoprobe Systems®

A DIVISION OF KEJR, INC.

Corporate Headquarters
601 N. Broadway • Salina, Kansas 67401
1-800-GEOPROBE (1-800-436-7762) • Fax (785) 825-2097
www.geoprobe.com

APPENDIX D

SITE-SPECIFIC HEALTH ADDENDUM TO THE BASEWIDE AND SAFETY PLAN

SITE-SPECIFIC ADDENDUM
TO THE BASEWIDE HEALTH AND SAFETY PLAN

RCRA FACILITY INVESTIGATION WORK PLAN
SWMU 183 - BASEWIDE SEWER SYSTEM
HOLLOMAN AIR FORCE BASE, NEW MEXICO

Prepared for:

49 CES/CEA
Holloman Air Force Base
New Mexico

Under Contract to:

U.S. Army Corps of Engineers
Alburquerque District
HTRW Branch
4101 Jefferson Plaza NE
Alburquerque, New Mexico 807109-3435

Contract No. W912PL-07-D-0050
Delivery Order No. DM01

Prepared by:

NationView, LLC
1608 13th Avenue South, Suite 160
Birmingham, Alabama 35205
NationView Project No. 8080014.01.15

August 2009

This page intentionally left blank.

SITE-SPECIFIC ADDENDUM TO THE BASEWIDE HEALTH AND SAFETY PLAN

RCRA FACILITY INVESTIGATION WORK PLAN SWMU 183 – BASEWIDE SEWER SYSTEM HOLLOMAN AIR FORCE BASE, NEW MEXICO

TABLE OF CONTENTS

Acronyms and Abbreviations iii

1 Project Safety Coordination 1-1

2 Project Background and Scope 2-1

3 Hazard Assessment and Controls 3-1

3.1 Task Hazard(s) Summary 3-1
3.2 Hazard Control Measures 3-2
3.3 Written Safety Procedures and Programs 3-2
3.4 Permits 3-3

4 Personal Protective Equipment 4-1

4.1 Purpose 4-1
4.2 Scope 4-1

5 Site Monitoring 5-1

6 Site Control 6-1

6.1 Site Activities 6-1
6.2 Decontamination 6-2

7 Communications 7-1

8 Medical Surveillance and Training 8-1

9 Hazardous Chemicals 9-1

10 Emergency Action and Response 10-1

11 Emergency Contacts 11-1

12 Hospital Directions 12-1

13 References 13-1

Tables

Table 1-1. Project Team Members with Project Health and Safety Responsibilities 1-1
Table 3-1. Task Hazards Summary…….....3-1
Table 3-2. Written Safety Procedures and Programs…….....3-2
Table 4-1. Personal Protective Equipment by Activity…….4-1
Table 5-1. Direct Reading Exposure Monitoring……..……..5-1
Table 6-1. Site Control for General Work Area(s)……6-1
Table 6-2. Site Control for Potentially Contaminated Area(s)……6-1
Table 6-3. Decontamination Procedures by Type……. 6-1
Table 8-1. Required Worker Training and Site-Specific Training……..8-1
Table 9-1. Hazardous Chemicals Brought On-Site…… 9-1
Table 10-1. Emergency Coordinator and Alternate……..10-1
Table 10-2. Evacuation Procedures……...…10-1
Table 10-3. Potential Emergency Situations……10-2

Figures

Figure 12-1. Hospital Route Map 12-2

Attachments

A Activity Hazards Analysis

B Primary Contaminants of Concern

ACRONYMS AND ABBREVIATIONS

AF Fm	Air Force Form
AHA	Activity Hazard Analysis
ANSI	American National Standards Institute
CES/CEA	Civil Engineering Squadron/Engineering Asset Management
CFR	Code of Federal Regulations
CHMM	Certified Hazardous Materials Manager
CIH	Certified Industrial Hygienist
CPEA	Certified Professional Environmental Auditor
CPR	Cardiopulmonary Resuscitation
CSP	Certified Safety Professional
dBA	Decibels A-weighted
DOT	Department of Transportation
DPT	Direct push technology
DQO	Data Quality Objective
HAFB	Holloman Air Force Base
HASP	Health and Safety Plan
HEPA	High Efficiency Particulate Air
HAS	Hollow Stem Auger
HSM	Health and Safety Manager
IDW	Investigation Derived Waste
L	Liter
mg/m^3	Milligrams per cubic meter
MHS	Master of Health Science
mL	Milliliters
mR	Milliroentgen
mrem	Millirem
MSDS	Material Safety Data Sheet
MUTCD	Manual on Uniform Traffic Control Devices
NFA	No Further Action
NIOSH	National Institute for Occupational Safety and Health
NRR	Noise Reduction Rating
OSHA	Occupational Safety and Health Administration
OV	Organic Vapor
OWS	Oil/Water Separator
PCBs	Polychlorinated Biphenyls
PEL	Permissible exposure limit
P.G.	Professional Geologist
PID	Photoionization Detector
PM	Project Manager
PPE	Personal protective equipment
ppm	Parts per million

ACRONYMS AND ABBREVIATIONS (CONTINUED)

RCRA	Resource Conservation and Recovery Act
RFI	RCRA Facility Investigation
SPF	Sun protection factor
SSA	Site-Specific Addendum
SSHO	Site Safety and Health Officer
SWMU	Solid Waste Management Unit
TWA	Time weighted average
USACE	U.S. Army Corps of Engineers
VOC	Volatile organic compound
WWTP	Wastewater Treatment Plant

1 PROJECT SAFETY COORDINATION

The NationView personnel who are responsible for safety and health issues during the implementation of the work plan are identified in Table 1-1. The respective personnel shall have reviewed and approved this Site-Specific Addendum to the Basewide Health and Safety Plan (HASP) submitted by NationView, LLC, for implementation on this scope of work prior to the start of field operations. The requirements of this site-specific addendum are applicable to NationView employees, their subcontractors, and site visitors.

Table 1-1. Project Team Members with Project Health and Safety Responsibilities

Title	Name	Telephone
Corporate Sponsor	Mr. David Martin	205-908-0731
Program Manager	Mr. Frank Gardner, P.G.	303-386-6454
Project Manager	Mr. Jim Moore, P.G.	303-929-4840
Project Geologist	Mr. Dustin McNeil, P.G.	303-895-1963
Health and Safety Manager (HSM)	Ms. Sally S. Smith, MHS, CIH, CHMM, CSP, CPEA	205-918-4032
Site Safety and Health Officer (SSHO)	Mr. John Hymer	575-491-9171

Notes:
P.G. = Professional Geologist
MHS = Master of Health Science
CIH = Certified Industrial Hygienist
CHMM = Certified Hazardous Materials Manager
CSP = Certified Safety Professional
CPEA = Certified Professional Environmental Auditor

This page intentionally left blank.

2 PROJECT BACKGROUND AND SCOPE

The Solid Waste Management Unit (SWMU) 183 site is unique in that, rather than being a waste management system of limited to moderate size in a singular location, it is a subsurface feature comprised of approximately 165,000 linear feet of sewer line (Radian, 1998) that serves the entire developed portions of the Base. The sewer system collects and transports both sanitary and mixed industrial wastes to the Base's wastewater treatment plant (WWTP), which is located at the central-southern boundary of the Base.

A number of past studies and removal actions have been performed in direct relation to SWMU 183 and its tributary systems beginning in 1997. Common waste-generating activities at the Base that have been documented include vehicle, aircraft, equipment and floor washing; x-ray and photo processing; and fuel canister rinsing. In addition, many of these facilities utilized pretreatment features such as grit chambers, grease traps, holding ponds, and oil/water separators (OWS) before wastes were discharged into the sewer system. For further details in regards to the historical characterization data and chronology of previous investigations please refer to Section 1.9 of the [Resource Conservation and Recovery Act] *RCRA Facility Investigation [RFI] Work Plan SWMU 183 – Basewide Sewer System Holloman Air Force Base, New Mexico* (NationView, 2009).

The RFI Work Plan will serve as the primary document for the SWMU 183 site investigation. The primary project objectives of the SWMU 183 RFI are to:

1. Identify locations where releases to the environment from the sewer system have occurred,

2. Characterize the nature and extent of contaminants of concern in identified releases to soil and/or groundwater,

3. Collect sufficient analytical data to complete a site specific risk assessment to determine the affect of releases on human health and/or the environment, and

4. Collect the proper data to meet the data quality objectives (DQOs) to support a No Further Action (NFA) Status under NFA Criterion 5 and obtain a Class III permit modification to remove this site from Table A of the Holloman Air Force Base (HAFB) Permit (NM6572124422).

The anticipated investigation activities for this RFI project include:

- Mobilization and demobilization of equipment;
- Direct push technology (DPT) soil boring, soil boring abandonment, and potential monitoring well installation;

- Hollow Stem Auger (HSA) soil boring, soil boring abandonment, and potential monitoring well installation; and
- Subsurface soil sampling and potential groundwater sampling.

3 HAZARD ASSESSMENT AND CONTROLS

3.1 Task Hazard(s) Summary

The potential health and safety hazards of this task are summarized below in Table 3-1. The potential for encountering these hazards is ranked (high, moderate, or low) based on the work to be performed and the hazard control measures to be used. All tasks and their control measures are addressed in Task Specific Activity Hazard Analyses (AHAs) in Attachment A of this HASP Addendum.

Table 3-1. Task Hazards Summary

Summary	Hazard potential [High, Moderate, or Low]	Description of potential hazards
__√__General Safety	• Moderate	• Walking and surfaces • Heavy equipment and vehicular traffic • Materials handling • Slips, trips, and falls
__√__Utilities	• Low	• Buried • Overhead • Building Although these hazards should not be associated with this particular scope of work, it is necessary to verify that the hazards can be controlled.
__√__Chemical	• Moderate	• Volatile Organic Compounds (VOCs) • Semi-Volatile Organic Compounds (SVOCs) • Polychlorinated Biphenyls (PCBs) • Herbicides/Pesticides (Sub-Basin 4 only) • Perchlorate (Sub-Basin 8 only) • Metals (See Attachment B)
__√__Physical	• Moderate	• Thermal stressors • Equipment noise
__√__Biological (i.e. Plants, animals, insects, spiders, infectious waste)	• Low	• Insect stings and bites • Poisonous snakes/reptiles (Potential for contact should be minimal)
__√__Radiological (i.e. exposure to low levels of ionizing radiation due to potential presence of medical tracers such as Carbon-14, Tritium, and Radium 226/288)	• Low	• Potential exposure to Beta and possibly Alpha radiation • Applicable only within Sub-Basins 8 and 9

3.2 Hazard Control Measures

General safe work practices and control measures are identified and summarized in the *Basewide HASP* (Bhate, December 2003). This HASP Addendum has been updated to be consistent with the practices described in the *U.S. Army Corps of Engineers Safety and Health Requirements Manual, EM 385-1-1, September 2008*. In addition, the implementation of tasks associated with the SWMU 183 RFI, within Sub-Basins 8 and 9, may involve working in areas potentially contaminated with radionuclides and therefore the guidance described in the *Radiation Protection Manual, U.S. Army Corps of Engineers, EM 385-1-80, May 1997* was also considered in the assessment of hazards and their mitigation. Additional task-specific hazards and control measures are identified for non-routine tasks as part of the Activity Hazard Analysis (AHA) process. AHAs have been developed for each of the following activities and are included in Attachment A of this HASP Addendum:

- General site activities/mobilization and demobilization
- Soil boring, subsurface soil sampling, borehole abandonment, monitoring well installation, groundwater sampling
- Investigations in areas within Sub-Basins 8 and 9 that are potentially contaminated with medical tracers such as Carbon-14, radium 226 and 228, and tritium

3.3 Written Safety Procedures and Programs

Table 3-2 provides a summary of the existing safety procedures and programs that will be used for this RFI at SWMU 183. Copies of applicable procedures and programs are included in the Basewide HASP, as indicated.

Table 3-2. Written Safety Procedures and Programs

Reference Procedure or Program	Applicable Section(s)
Hazard Communication Program	All (Refer to Basewide HASP)
Respiratory Protection Program	All (Refer to Basewide HASP)
Hearing Conservation Program	All (Refer to Basewide HASP)
Incident Reporting and Investigation Program	All (Refer to Basewide HASP)
General Work and Safety Rules	All (Refer to Basewide HASP)
Site Health and Safety Inspections	All (Refer to Basewide HASP)
Environmental Monitoring	All (Refer to Basewide HASP)
Personal Protective Equipment Program	All (Refer to Basewide HASP)
Thermal Stressors Program	All (Refer to Basewide HASP)

Reference Procedure or Program	Applicable Section(s)
Materials Handling Program	All (Refer to Basewide HASP)
Housekeeping Program	All (Refer to Basewide HASP)
Fire Prevention/Protection/Response Plans Program	All (Refer to Basewide HASP)
Utilities Program	All (Refer to Basewide HASP)
Electrical Safety Program	All (Refer to Basewide HASP)
Emergency Procedures Program	All (Refer to Basewide HASP)
Hand and Power Tools Program	All (Refer to Basewide HASP)
U.S. Army Corps of Engineers Radiation Protection Manual	Sections that Guide on Radiation Protection

3.4 Permits

Before site activities can begin, there are several pre-construction documents and approval requirements to be met, including Air Force Form (AF Fm) 332 approval, Base dig permit with utility clearances, site security measures, and facility manager notification of the intended operations. NationView will coordinate project requests for Base installation support services through the 49th Civil Engineering Squadron/Engineering Asset Management (CES/CEA). Pertinent to the start of activities, a pre-construction meeting and site walk-through will be conducted with the U.S. Army Corps of Engineers (USACE) Resident Engineer, HAFB personnel, and the NationView Site Manager, to inspect site conditions for site/equipment access, equipment staging, and decontamination area(s), potential site hazards, and emergency evacuation routes. Also reviewed at this time will be project procedures in accordance with the schedule and planned activities.

This page intentionally left blank.

4 PERSONAL PROTECTIVE EQUIPMENT

4.1 Purpose

The purpose of this program is to ensure that personnel protective equipment (PPE) is selected in accordance with 29 Code of Federal Regulations (CFR) §1910.132, properly used and maintained, and that NationView personnel are properly trained in the inspection, use, and maintenance of PPE.

4.2 Scope

This program applies to all NationView operations, including sub-contractors, during this NationView managed RFI project. The following PPE as presented in Table 4-1 will be used for the identified activities based on the best available information about the work requirements and anticipated hazards.

Table 4-1. Personal Protective Equipment by Activity

Activity	Head/Face	Foot	Hands	Respiratory	Clothing
Mobilization / Demobilization	Hard Hat[1] (for overhead hazards), Safety Glasses[2] with rigid side shields	Steel toed boots	Leather gloves as needed	None[3, 4]	Minimum of long pants and shirts with a minimum 4-inch sleeve
General Site Labor	Hard Hat[1] (for overhead hazards), Safety Glasses[2] with rigid side shields	Steel toed boots	Leather gloves as needed	None[3, 4]	Minimum of long pants and shirts with a minimum 4-inch sleeve
Equipment Operation (Drilling)	Hard Hat[1] (for overhead hazards), Safety Glasses[2] with rigid side shields	Steel toed boots Boot covers for entering and exiting equipment	Leather gloves as needed	None[3, 4] Air Purifying Respirator with Organic vapor (OV) cartridges and P100 pre-filters based on monitoring	Minimum of long pants and shirts with a minimum 4-inch sleeve
Equipment Decontamination	Hard Hat[1] (for overhead hazards), Safety Glasses[2] with rigid side shields	Steel toed boots Boot covers	Chemical resistant gloves	None[3, 4] Air Purifying Respirator with Organic vapor cartridges and P100 pre-filters based on monitoring	Minimum of long pants and shirts with a minimum 4-inch sleeve Tyvek coveralls may be worn as recommended by the SSHO

Activity	Head/Face	Foot	Hands	Respiratory	Clothing
Soil/Groundwater Sampling	Hard Hat[1] (for overhead hazards), Safety Glasses[2] with rigid side shields	Steel toed boots	Chemical resistant gloves	None[3, 4] Air Purifying Respirator with Organic vapor cartridges and P100 pre-filters based on monitoring	Minimum of long pants and shirts with a minimum 4-inch sleeve Tyvek coveralls may be worn as recommended by the SSHO
Supervision of work	Hard Hat[1] (for overhead hazards), Safety Glasses[2] with rigid side shields	Steel toed boots	Leather gloves as needed	None[3, 4]	Minimum of long pants and shirts with a minimum 4-inch sleeve

Notes:

[1] Hard hats are not required inside fully enclosed equipment cabs.

[2] Safety Glasses with rigid side shields approved by American National Standards Institute (ANSI) Z-87 required at all times.

[3] Voluntary use of respirators is authorized for comfort from nuisance dusts and odors, provided they are issued and used in accordance with established respiratory protection program procedures.

[4] Cartridge change out will occur at the following conditions:

- Damage to cartridge
- Cartridge is wet, restriction in breathing, unusual odors
- Cartridge is visibly clogged with dust, restriction in breathing
- After 40 hours of use with no continuous exposures over the established Permissible Exposure Limits (PELs)
- Changes that may be otherwise identified in 29 CFR §1910.120.

The following qualified person certifies that the selection of PPE is based on best available information about the work requirements and anticipated hazards.

Printed name:	Signature:	Date:
Sally S. Smith, MHS, CIH, CHMM, CSP, CPEA Health and Safety Manager	Sally S. Smith	8/20/09

5 SITE MONITORING

Site monitoring will be conducted using direct-reading instruments primarily in the workers' breathing zone. To the extent feasible, site operations will be conducted and modified as needed to ensure that personnel are situated upwind of the soil boring/well installation and excavation activities. Initial upwind background and work-zone readings will be obtained before the initiation of activities. Readings of breathing zones (unless location is otherwise specified) will be taken periodically during all activities. The SSHO has the authority to modify the level of protection required for work at these sites as well as halt operations as deemed necessary to control personal exposures. Monitoring results will be recorded on an Atmospheric Monitoring Log Field Health and Safety form maintained by the SSHO. Monitoring, calibrating, and maintaining instruments are the responsibility of the SSHO. Table 5-1 summarizes the site monitoring parameters and action levels applicable for direct reading exposure monitoring.

Table 5-1. Direct Reading Exposure Monitoring

Activity(s)	Compound/ Instrument	Action Level(s) and Frequency	Actions
Soil boring and monitoring well installation (all intrusive activities) and Investigation Derived Waste (IDW) Handling	Total VOCs / Photoionization Detector (PID)	0 - 5 parts per million (ppm) Every 15 minutes during intrusive activities	Continue work in required PPE and continue monitoring.
		> 5 ppm to < 10 ppm (Sustained for more than 5 minutes)	Ensure personnel are upwind, notify the Project Manager (PM). SSHO will upgrade PPE to Level C respiratory protection with OV and High Efficiency Particulate Air (HEPA) cartridge, as necessary. Implement appropriate controls such as ventilation. Monitor for benzene and implement actions listed below.
		> 10 ppm (Sustained for more than 5 minutes)	Stop work, ensure employees are upwind. Notify PM and HSM for additional control measures.
	Benzene / By colorimetric tube or similar (where indicted by PID readings)	No detection up to 0.2 ppm	Continue work activities in required protective equipment. Perform integrated personal exposure monitoring using OV badge or charcoal tubes with calibrated pump per National Institute for Occupational Safety and Health (NIOSH) or Occupational Safety and Health (OSHA) method (consult HSM as needed).
		> 0.2 ppm	Cease work, exit the area to upwind location and notify the Site Manager.

Table 5-1 (Continued). Direct Reading Exposure Monitoring

Activity(s)	Compound / Instrument	Action Level(s) and Frequency	Actions
All intrusive activities (continued)	Radionuclides / Beta-Gamma direct radiation reading field instrument such as a Ludlum 449 scintillation meter that provides readings in milliroentgen (mR)/hour (Sub-Basins 8 and 9 only)	100 millirem (mrem) annual Total Effective Dose Equivalent, whole body	Establish site background with the direct reading instrument. Cease work and leave the area if radiation levels exceed 0.5 mR/hour.
	Dust Particulates / Personal DataRam or SKC HAZ Dust IV Real Time Particulate Air Monitor	0 – 1 milligrams per cubic meter (mg/m^3) Every 5 minutes during intrusive activities	Continue work in required PPE and continue monitoring.
		>1 mg/m^3 - < 30 mg/m^3 (Sustained for more than 5 minutes)	Cease work and ensure personnel are upwind, notify the Site Manager. Use wet methods for dust suppression. SSHO shall upgrade PPE to full face air purifying respiratory protection with HEPA/OV/Chlorine cartridges. Perform personnel exposure monitoring using integrated time weighted average (TWA) monitoring for dust and metals: lead, arsenic, and chromium.
		>30 - < 50 mg/m^3 (Sustained for more than 5 minutes)	Cease work and ensure personnel are upwind, notify the Site Manager. Use wet methods for dust suppression. SSHO shall upgrade PPE to full face powered air purifying respiratory protection with HEPA/OV/Chlorine cartridges. Perform personnel exposure monitoring using integrated TWA monitoring for dust and metals: lead, arsenic, and chromium.
		> 50 mg/m^3 (Sustained for more than 5 minutes)	Stop work, ensure employees are upwind. Notify PM and HSM for additional control measures.
All site activities	Noise	< 85 decibels A-weighted (dBA)	Continue work in required PPE and continue monitoring.
		> 85 dBA to < 110 dBA	Ear plugs or ear muffs must be worn with a Noise Reduction Rating (NRR) of at least 26 dBA.
		> 110 dBA to < 130 dBA	Ear plugs and ear muffs must be worn together each with a NRR of at least 26 dBA each
		> 130 dBA	Cease work and ensure personnel leave work area. Notify the PM.

6 SITE CONTROL

6.1 Site Activities

Site-specific site control measures will be used to control access to the SWMU 183 work areas. Tables 6-1 and 6-2 summarize the site control requirements applicable for both general work areas and work areas with potentially contaminated soils, respectively.

Table 6-1. Site Control for General Work Area(s)

Location	Site Control Procedure (discuss important elements such as signs, barricades, fencing, briefings, sign-in/out logs, etc.)
General Work Area	Due to the location of the project site, access will be coordinated with the Site Manager and HAFB Operations. Access will be made via a specified route. The SSHO will be responsible for the accountability for all onsite personnel using appropriate sign in / sign out procedures as needed. The SSHO shall be responsible for maintaining adequate site control in order to limit hazards to site workers and site visitors. To the extent feasible, immediate work areas shall be cordoned off through the use of devices such as traffic cones, caution tape, or construction fencing along with appropriate signage such as "Danger – Construction Area, Authorized Personnel Only" and "Hard Hat, Safety Glasses, and Safety Boots Required in this Area". All site workers shall be aware of surroundings and prevent unauthorized personnel as well as vehicle traffic from entering the work area. SWMU 183, the Basewide Sewer System, serves the entire developed portion of the base, therefore, traffic control may be required. In the event of traffic control use, all traffic control devices and methodologies will comply with the U.S. Department of Transportation (DOT) Manual on Uniform Traffic Control Devices (MUTCD, http://mutcd.fhwa.dot.gov) including the use of appropriate roadway markings, highly visible safety vests, and flagmen as needed.

Table 6-2. Site Control for Potentially Contaminated Area(s)

Location	Site Control Procedure (discuss important elements such as signs, barricades, briefings, qualifications, required supplies and equipment, sign-in/out logs, etc.)
Support Zone	Located outside of contaminated areas, access will be from clean areas or from the Exclusion Zone through the Contamination Reduction Zone.
Contamination Reduction Zone	The Contamination Reduction Zone will be demarcated with caution tape or temporary construction fencing. Decontamination stations will be located here.
Exclusion Zone	Exclusion Zone work areas will be clearly demarcated with caution tape or temporary construction fencing. All access to this area will require the use of a sign-in/out log.

6.2 Decontamination

Required decontamination procedures are described below in Table 6-3.

Table 6-3. Decontamination Procedures by Type

Type of decontamination	Decontamination Methods
Personnel decontamination	Personal hygiene will be the responsibility of each individual worker. Eating, drinking, chewing tobacco or gum, smoking, and any other practice that may increase the possibility of hand-to-mouth contact is prohibited in the work area. Personnel will be required to thoroughly wash hands and face prior to eating, drinking, or smoking. Any disposable PPE used will be collected following use in the work area for proper disposal. All disposable PPE will be removed and disposed of in a labeled, pre-designated receptacle prior to leaving the work area to prevent the spread of contaminants. Upon return, new and/or cleaned PPE will be provided for use. In the case of excessive soiling or splattering, the PPE shall be changed out more frequently to reduce the spread of contamination and reduce the potential for contaminant breakthrough. Reusable PPE shall be cleaned with soap and water after each use. Respirator filter cartridges (if used) shall be changed out on a daily basis. The decontamination area will be divided into two general areas (equipment area and personnel decontamination area). When exiting the work area, workers will leave all equipment in the equipment area. Workers will then remove PPE. Gloves will be turned inside out so as to not come into contact with potentially contaminated material. Respirators if used will then be removed and set aside for cleaning. Workers will then proceed to the personnel decontamination area and don clean gloves for use with soap and water to wash respirators, any other reusable PPE and tools. A small wash area will be provided so workers can then wash their face and hands. Clean paper towels and/or rags will be used to dry hands and face. Spent PPE and towels/rags will then be placed in a 55-gallon drum for proper disposal at the end of the project. The drawing below this table depicts a typical decontamination sequence.
Equipment decontamination	Work efforts will be made to minimize equipment contact with contaminated materials. Prior to leaving the work area(s), equipment (tires, treads, drill rods, hand tools) will be dry decontaminated. Soils from the dry decontamination process will be disposed of at the HAFB landfarm. Decontamination tools may include brooms and shovels.

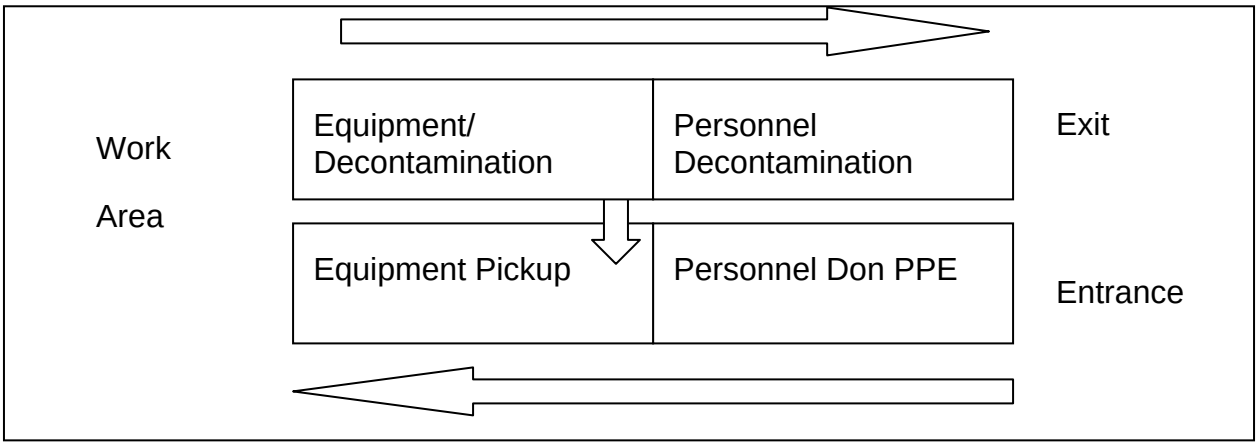

7 COMMUNICATIONS

Cellular telephones will be available to summon emergency services as required. Refer to Sections 10, 11, and 12 of this Site-Specific Addendum (SSA) to the HASP for site specific guidance on emergency situations and appropriate actions. Site communication amongst workers shall be a combination of verbal and line of sight hand communications. Some common hand communication signals include the following:

- Hand gripping throat: Can't breath
- Grip partner's wrist or both hands at waist: Leave area immediately
- Hands on top of head: Need assistance
- Thumbs up: OK, I'm all right, I understand
- Thumbs down: No, negative

Cellular telephone use is not permitted while operating equipment. However, in the event of an emergency, the support zone personnel may contact drill rig operators with hand held radios or cellular phones.

This page intentionally left blank.

8 MEDICAL SURVEILLANCE AND TRAINING

The medical surveillance and training requirements for NationView's on-site personnel working on the soil boring, soil sampling, well installation, and groundwater sampling activities will follow the requirements outlined in the Basewide HASP Sections 7.4 and 5, respectively.

All personnel performing on-site work activities, wherein they may be exposed to hazards resulting from field activities, will have completed applicable training in compliance with 29 CFR Part 1910/29 CFR Part 1926 and USACE EM 385-1-1. Table 8-1 provides a summary of the minimum training requirements for site project personnel.

Table 8-1. Required Worker Training and Site-Specific Training

Required worker training	Site-specific training requirements
√ 40-hour Hazwoper General Site Worker (All) √ 8-hour Hazwoper Supervisor (SSHO) √ 8-hour Hazwoper Refresher (as applicable) √ 30-hour for Construction (SSHO) No retraining requirements are anticipated during the project	All personnel working on site shall attend site-specific orientation/training prior to starting onsite project work. This training will be facilitated by the SSHO.

Additionally, at a minimum the SSHO or the designated representative and one other person will be certified in First Aid and Cardiopulmonary Resuscitation (CPR), and will be continuously present during site operations.

This page intentionally left blank.

9 HAZARDOUS CHEMICALS

Hazardous chemicals (as defined in 29 CFR §1910.1200) to be brought or used on-site are identified below. This chemical inventory and associated Material Safety Data Sheet (MSDSs) will be maintained by the SSHO.

Table 9-1. Hazardous Chemicals Brought On-Site

Chemical Name	Amount	Location	Purpose
Assorted fuels, lubricants, coolants, etc. necessary for equipment operation	No storage planned. Quantities limited to immediate use requirements of on-site equipment.	No storage planned. Materials to be brought on-site by vendor's maintenance vehicle.	Equipment Servicing and Operation
Calibration gases for air monitoring equipment, if required for instruments in use	One small aluminum cylinder of each required gas. (Each contains approximately 35 liters [L] of gas mixture).	Storage with monitoring equipment in the onsite field office	Calibration of monitoring equipment
Groundwater sample preservative (hydrochloric acid)	2 milliliter (mL)/vial	Minimal quantities will be required for groundwater sampling	Groundwater Sampling

Hazardous materials anticipated to be brought on site include preservatives for groundwater samples, calibration gases for air monitoring equipment, and possible fuel, lubricants, or coolants for drill rigs and accessory vehicles. No other hazardous materials are anticipated to be brought on site by NationView or any potential subcontractor for use on site under this scope of work.

A copy of the NationView Hazard Communication Program is included in the Basewide HASP. A MSDS must be maintained on site for any hazardous materials stored or used. A MSDS must be submitted to the HSM and approvals obtained prior to bringing any hazardous materials on the job site. The MSDSs for all hazardous materials will be reviewed with all onsite personnel by the SSHO as a part of chemical specific hazard communication training.

Additionally, all personnel onsite will have appropriate general hazard communication training per 29 CFR §1910.1200 and 29 CFR §1910.120. All containers used to store hazardous materials or IDW will be properly labeled with the identity and hazards associated with the contents. All IDW water will be contained in 55-gallon U.S. DOT approved drums. An inventory of the number of drums will be maintained by the SSHO. The labeling will be weatherproof and fade proof for a minimum of 1 year. An IDW holding area will be designated at or near the subject site. Groundwater sampling results will be used to characterize the IDW.

This page intentionally left blank.

10 EMERGENCY ACTION AND RESPONSE

Personnel responsible for coordinating emergency response actions during soil boring, well installation, and soil and groundwater sampling activities are identified below in Table 10-1. A map showing directions to the authorized medical facility are included in Section 12.

Table 10-1. Emergency Coordinator and Alternate

Responsibility	Name	Phone Number(s)
Task Emergency Coordinator	Mr. John Hymer	Office (575) 201-4261 Cell (575) 491-9171
Alternate Emergency Coordinator	Mr. Dave Rizzuto	Office (575) 674-2012 Cell (575) 430-3965

If an emergency situation develops which requires evacuation of the work area, the evacuation procedures in Table 10-2 shall be followed.

Table 10-2. Evacuation Procedures

Evacuation Step	Methods and comments:
Notify affected workers	Use of site communication methods as applicable
Evacuate to safe location	Assemble at the primary evacuation site (support area outside of the exclusion zone)
Assemble and account for workers	Emergency Coordinator shall account for personnel using site Sign in/Sign out sheet
Notify Fire and Emergency Services	Notification as needed
Complete incident report	Follow the Incident Reporting and Investigation Procedure

Table 10-3 summarizes potential emergency situations and response actions that are applicable to the SWMU 183 site RFI activities.

Table 10-3. Potential Emergency Situations

In case of	Response actions
Injury or illness	Treat injury with applicable First Aid. All work related injuries beyond first aid will result in notification of Emergency Services and notification of the employee supervisor. Any employee requiring advanced medical treatment will be accompanied by a knowledgeable company employee that can answer potential questions on job duties and hazards. Make notifications in accordance with the Incident Reporting and Investigation Procedure (found in Section 10.2.2 of the *Basewide Health and Safety Plan*, Bhate, December, 2003).
Chemical exposure	First Aid shall be provided such as but not limited to: move victim to fresh air, remove contaminated clothing, flush affected skin with water, and seek medical attention.
Fire or explosion	Notify emergency services immediately. All personnel shall evacuate the immediate area of the fire and move to an upwind location. Personnel shall not engage in fire fighting activities (excluding the use of fire extinguishers) unless trained to do so and only in the incipient stages of fire.
Adverse weather	Tornados, lightning, or other threatening weather conditions will result in an immediate shut down of operations and evacuation of personnel. Lightning proximity will be determined by measuring the time interval between the visually observed lightning flash and the subsequent sound of thunder. An interval less than 30 seconds will prompt the shut down. Operations will be shut down for the period of the storm passing plus an additional 20 minutes.
Material spill or release	Vehicles and equipment will be maintained and inspected so as to prevent fluid leaks. Should any vehicle fluid leaks occur, the equipment will be taken out of service to make necessary repairs and any contaminated material will be cleaned-up and disposed of properly. Spill kits will be available to facilitate prompt containment and clean-up of spills. Notification will be made in accordance with the Incident Reporting and Investigation Procedure. Storage areas will be designed to have secondary containment as required, and work plans will be executed to accommodate stormwater runoff and minimize the potential for contamination spread.

11 EMERGENCY CONTACTS

In the event of an emergency, the following contacts should be made, as appropriate:

HAFB Emergency Number (using HAFB phone system)……9-911
Operators will assist with Medical, Fire, and Police emergencies

HAFB Security Force……...(575) 572-5037

HAFB Fire Protection……..(575) 572-1117

HAFB Hospital – 49th Medical Group (Main switchboard)…….(575) 572-2778

Civilian Hospital (Alamogordo)
Gerald Champion Regional Medical Center……(575) 439-6100

HAFB Fire Protection (Non-emergency) ……....……..(575) 572-7228

Range Control (for Heat Index and Category) ……...(575) 678-2222

After initial contacts have been made and the situation has stabilized, notify the NationView Site Manager, SSHO, Senior Project Manager, and/or Health and Safety Manager (HSM), as appropriate.

This page intentionally left blank.

12 HOSPITAL DIRECTIONS

In the event of a true medical emergency ("life or limb"), HAFB Emergency Services should be used. Notification of any injury must be made to HAFB Emergency Services. NationView personnel and subcontractors should not transport injured personnel to the HAFB Hospital without prior authorization from HAFB Emergency Services.

Other injuries should be treated as necessary at Gerald Champion Regional Medical Center at 2669 Scenic Drive, Alamogordo, NM 88330. From HAFB, exit the Main Gate and proceed east on US-70 onto US-54, continue north on US-54 to Indian Wells Road, turn right heading east to Scenic Drive, and turn left on Scenic proceed to the medical center. A map to this hospital is presented as Figure 12-1.

Figure 12-1. Hospital Route Map

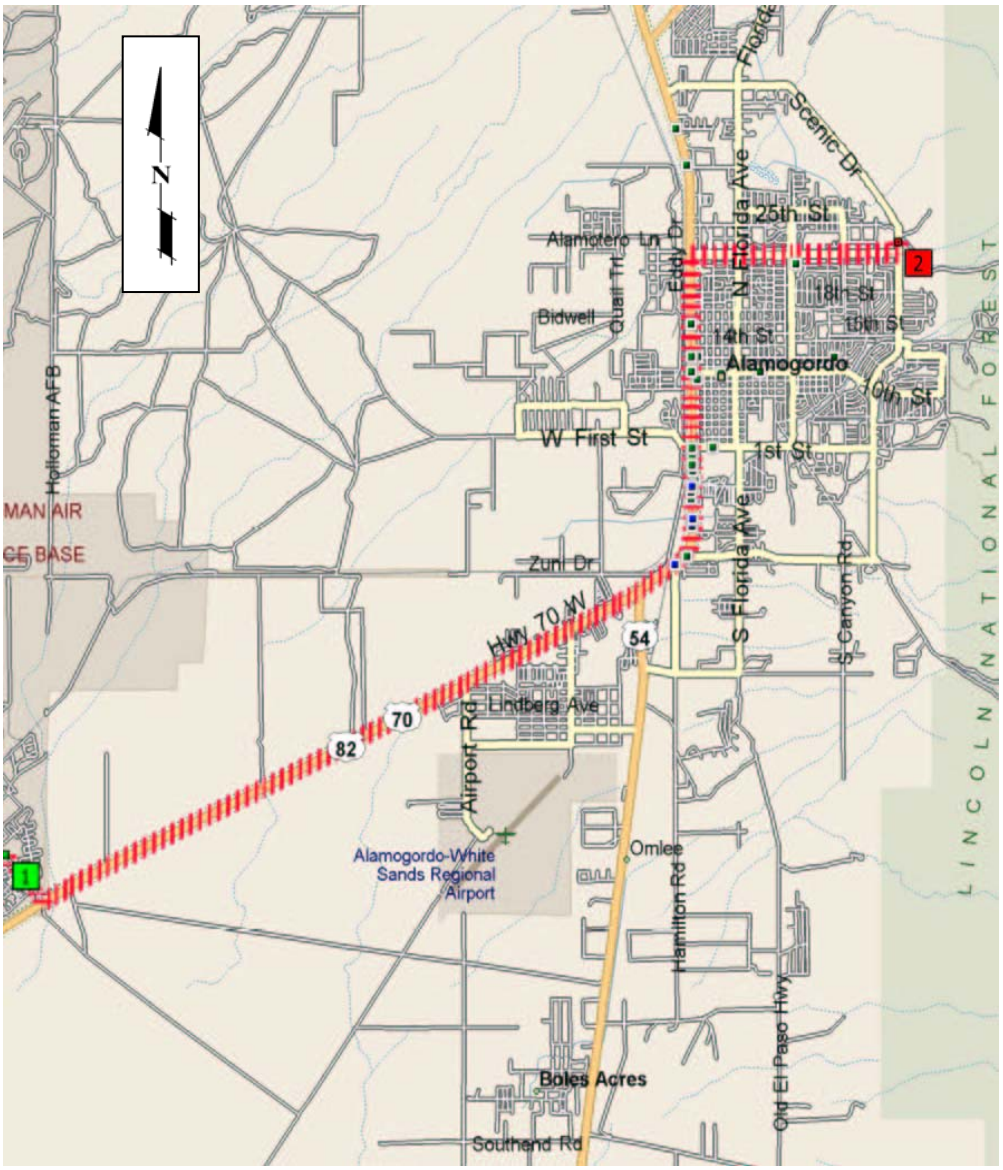

NATIONVIEW	HOSPITAL ROUTE MAP Holloman Air Force Base to Gerald Champion Regional Hospital Source: Microsoft Expedia Street Maps	Holloman Air Force Base SSA to the HASP SWMU 183 RFI
	Not to Scale / Date August 2009	Figure 12-1

13 REFERENCES

Bhate. December 2003. *Final Basewide Health and Safety Plan, Holloman Air Force Base, Alamogordo, New Mexico*.

NationView, LLC. August 2009. *Final RCRA Facility Investigation Work Plan, SWMU 183 – Basewide Sewer System, Holloman Air Force Base, New Mexico*.

Radian International, LLC. August 1998. *Final Infiltration and Inflow Study Report, Volume I, Holloman Air Force Base.*

U.S. Army Corps of Engineers. May 1997. *EM 385-1-80, Radiation Protection Manual.*

U.S. Army Corps of Engineers. September 2008. *EM 385-1-1 U.S. Army Corps of Engineers Safety and Health Requirements Manual.*

Additional documents reviewed but not cited:

NationView, LLC. August 2009. *Corporate Health and Safety Plan for Construction, Rev. 1.*

This page intentionally left blank.

ATTACHMENT A

ACTIVITY HAZARD ANALYSES (AHAS)

Activity Hazard Analysis (AHA) – 01

Task: RCRA Facility Investigation, SWMU 183 Basewide Sewer System	NationView Project Number: 8080014	
Minimum Personal Protective Equipment (PPE): Level D PPE (Long pants, shirts with minimum 4" sleeve, steel toe boots, safety glasses, hard hat for overhead hazards, leather work gloves, and hearing protection, as required)	Location: Holloman Air Force Base, New Mexico	
	Analysis Approved by: Sally S. Smith, CIH, CSP, CHMM, CPEA	Date: August 2009

Activity	Potential Hazards	Recommended Controls
General Site Activities including Mobilization / Demobilization and Site Preparation Note: Each workday shall begin with a mandatory daily safety meeting for all on-site workers	Slips, trips, or falls on walking and working surfaces	• Determine the best access route prior to transporting equipment and tools • Continuously inspect the work area for slip, trip, and fall hazards • Pay attention; ensure safe and secure footing • Maintain clean work areas by following good housekeeping procedures • Be alert for uneven and variable terrain • Wear slip resistant footwear when walking/working on slippery surfaces or slopes
	Site Traffic	• Be aware of potential vehicle traffic while on site • Follow posted warnings and rules for travel around site • Wear high visibility apparel
	Eye injury	• Use approved safety glasses with rigid side shields
	Overhead hazards	• Personnel will be required to wear hard hats that meet ANSI Standard Z89.1 in all areas with overhead hazards
	Cuts, punctures, and abrasions	• Wear leather work gloves when handling materials or using tools
	Dropped objects	• Steel toe boots meeting ANSI Standard Z41 will be worn
	Thermal Stressors (i.e. heat stress, cold stress)	• Employees will have appropriate clothing for variable weather • Use of long sleeves or application of sunscreen with a high sun protection factor (SPF) on exposed skin encouraged • Employees will take breaks and drink plenty of fluids to prevent heat stress • Warming breaks will be permitted as necessary to prevent cold stress
	Back Injury from Materials Handling	• Use proper lifting techniques • Loads greater than 50 pounds require assistance or mechanical equipment • Prior to lifting, check the load for jagged or sharp edges • Avoid torso twisting motions while handling or moving loads

AHA – 01 (Continued)

Activity	Potential Hazards	Recommended Controls
General Site Activities including Mobilization/ Demobilization and Site Preparation (continued)	Inclement weather (Thunderstorms and tornadoes)	• Halt activities immediately and take cover during thunderstorm or tornado warnings, shelter in a building if possible, stay away from windows • If outdoors, stay close to the ground • Listen to radio or television announcements for pending weather information • Do not try to outrun a tornado on foot or in a vehicle
	Biological hazards (spiders, snakes, etc.)	• Workers will inspect the work area carefully and avoid placing hands and feet into concealed areas • Look in direction of travel for biological hazards to avoid
	Chemicals (i.e. fuels, lubricants, coolants, sample preservatives, etc)	• Always practice good personal hygiene by washing hands and face frequently during the day and especially before eating, drinking, smoking, applying cosmetics, or any other activity that would increase the chances for hand to mouth exposure • Wear appropriate PPE while handling any chemicals; refer to the MSDS for specific requirements; minimum PPE must include safety glasses, safety boots, hard hats (for overhead hazards), and chemical resistant gloves
Safety Equipment Used	**Inspection Requirements**	**Training Requirements**
Level D PPE First Aid Kit Fire Extinguisher Eye Wash	Weekly inspections will be performed on fire extinguishers Weekly inspections will be performed on first aid kits Portable eye wash will be inspected weekly Informal daily work area inspections to be conducted by the SSHO Formal weekly inspections to be conducted by the SSHO using the Site Safety and Health Inspection Form	Site personnel have read and understand the SSA to the HASP Site personnel possess all of the required training as specified in the SSA to the HASP Site personnel received site specific safety indoctrination At least two individuals on-site will have current CPR and First Aid training

Activity Hazard Analysis (AHA) – 02

Task: RCRA Facility Investigation, SWMU 183 (non-radiological areas)	NationView Project Number: 8080014	
Minimum Personal Protective Equipment (PPE): Level D PPE (Long pants, shirts with minimum 4" sleeve, steel toe boots, safety glasses, hard hat for overhead hazards, leather work gloves, and hearing protection, as required)	Location: Holloman Air Force Base, New Mexico	
	Analysis Approved by: Sally S. Smith, CIH, CSP, CHMM, CPEA	Date: August 2009

Activity	Potential Hazards	Recommended Controls
Soil Boring and Soil Sampling IDW Handling Hazards and recommended controls from AHA – 01 apply	Drill Rig Hazards Including but not limited to: Flying debris, falling objects, noise, hydraulic failures, unguarded machinery, equipment rollover, movement of large, heavy drilling tools, etc.	• Drill rig is to be operated and maintained by qualified operators • A Drill Rig Inspection Checklist should be completed daily to ensure that the rig is operating properly • The inspection will include fittings, cables, pins, connections, lubrication points, controls, emergency stops, etc. • To the extent possible, the terrain should be level and the condition of the ground such that unexpected movement of the rig is unlikely • Stabilize the rig prior to boring • Wear required PPE (hard hat, safety glasses, work gloves, ear muffs or plugs, steel toe work boots), ensure loose clothing is secured • Maintain good housekeeping on and around drill rig

AHA – 02 (continued)

<table>
<tr><th>Activity</th><th>Potential Hazards</th><th>Recommended Controls</th></tr>
<tr><td>Soil Boring and Soil Sampling
IDW Handling

Hazards and recommended controls from AHA – 01 apply</td><td>Overhead/buried utilities</td><td>• Conduct a utility locate to identify the location of underground utilities in boring locations and complete and submit the required dig permit (Air Force Form 103)
• Overhead utilities should be considered live until determined otherwise
• Work activity adjacent to overhead electric power lines will not be initiated until a survey has been conducted to ascertain the safe clearance distance from energized lines. Refer to the USACE Safety and Health Requirements Manual (EM 385-1-1, 2008) for a complete description of procedures required when working at a location adjacent to overhead power lines. The minimum required clearance distances from energized overhead electric lines are provided below.
<table>
<tr><th>Nominal System Voltage</th><th>Minimum Rated Clearance</th></tr>
<tr><td>0 to 50 kV</td><td>3 m (10 ft)</td></tr>
<tr><td>51 to 200 kV</td><td>4.6 m (15 ft)</td></tr>
<tr><td>201 to 350 kV</td><td>6 m (20 ft)</td></tr>
<tr><td>351 to 500 kV</td><td>7.6 m (25 ft)</td></tr>
<tr><td>501 to 650 kV</td><td>9.1 m (30 ft)</td></tr>
<tr><td>651 to 800 kV</td><td>10.7 m (35 ft)</td></tr>
<tr><td>801 to 950 kV</td><td>12.2 m (40 ft)</td></tr>
<tr><td>951 to 1100 kV</td><td>13.7 m (45 ft)</td></tr>
<tr><td colspan="2">Note: kV = Kilovolts, m = Meter, ft = feet</td></tr>
</table>
• All underground utilities must be clearly marked before beginning work
• No borings shall be made within a 4 foot “Buffer Zone” of any utility marking</td></tr>
<tr><td></td><td>Exposure to soil contaminants</td><td>• To the extent feasible, limit contact with subsurface materials
• Wear required PPE when conducting intrusive activities
• SSHO shall conduct breathing zone monitoring for VOCs with a PID in accordance with requirements for site monitoring
• SSHO may require an upgrade in PPE or modification to work based on monitoring results
• Use appropriate decontamination methods</td></tr>
</table>

AHA – 02 (Continued)

Activity	Potential Hazards	Recommended Controls
Soil Boring Abandonment	Silica Dust Generation	• When abandoning soil borings with sand, granular bentonite, and/or Portland Cement, minimize dust generation • Stay up wind of generated dust and/or wear a dust mask
Monitoring Well Installation	Pinch points	• Utilize appropriate PPE (leather gloves) when handling well casings and tools
	Dust	• Use care when installing well materials (sand, bentonite, Portland cement) into monitoring well to prevent dust generation • Position body in an upwind location
Well Development / Groundwater depth measurement / Groundwater sampling	Exposure to groundwater contaminants	• Position body upwind from monitoring well prior to opening cap • Wear appropriate PPE including chemical resistant gloves and Tyvek coveralls to minimize potential contact with groundwater, as appropriate • Conduct work activities in a manner that minimizes potential contact with groundwater • Collect all PPE and disposable sampling equipment and dispose of properly • Wash hands and face prior to eating, drinking, or smoking
Safety Equipment Used	**Inspection Requirements**	**Training Requirements**
Level D PPE First Aid Kit Fire Extinguisher Eyewash	Weekly inspections will be performed on fire extinguishers Weekly inspections will be performed on first aid kits Portable eye wash will be inspected weekly Informal daily work area inspections to be conducted by the SSHO Formal weekly inspections to be conducted by the SSHO using the Site Safety and Health Inspection Form	Site personnel have read and understand the SSA Site personnel possess all of the required training as specified in the SSA Site personnel received site specific safety indoctrination Site personnel have reviewed all applicable MSDSs At least two individuals on-site will have current CPR and First Aid training

This page intentionally left blank.

Activity Hazard Analysis (AHA) – 03

Task: RCRA Facility Investigation, SWMU 183 (Sub-Basins 8 and 9 with potential radioactive contamination [Carbon-14, radium 226 and 228 and tritium] in source areas)	NationView Project Number: 8080014	
Minimum Personal Protective Equipment (PPE): Level D PPE (Long pants, shirts with minimum 4" sleeve, steel toe boots, safety glasses, hard hat for overhead hazards, leather work gloves, and hearing protection, as required)	Location: Holloman Air Force Base, New Mexico	
	Analysis Approved by: Sally S. Smith, CIH, CSP, CHMM, CPEA	Date: August 2009

Activity	Potential Hazards	Recommended Controls
Soil Boring and Sampling Hazards and recommended controls from AHA – 01 and AHA - 02 apply	Exposure to ionizing radiation above background levels during soil boring and soil sampling	• Measure background radiation levels using a Ludlum 449 scintillation survey meter next to each sampling area • Perform initial site entry by a certified radiation technician and survey the site with direct reading radiation instrument • If site levels are at background levels then proceed with site sampling tasks • If levels exceed background but are <0.5 mR/hour then upgrade PPE and setup site ingress and egress controls as per advice from the Health and Safety Manager and SSHO to prevent personnel exposure and spread of loose contamination • If levels exceed 0.5 mR/hour then cease work

Equipment Used	Inspection Requirements	Training Requirements
Level D PPE First Aid Kit Fire Extinguisher Eyewash	Weekly inspections will be performed on fire extinguishers Weekly inspections will be performed on first aid kits Portable eye wash will be inspected weekly Informal daily work area inspections to be conducted by the SSHO Formal weekly inspections to be conducted by the SSHO using the Site Safety and Health Inspection Form	Site personnel have read and understand the SSA Site personnel possess all of the required training as specified in the SSA Site personnel received site specific safety indoctrination Site personnel have reviewed all applicable MSDSs At least two individuals on-site will have current CPR and First Aid training

This page intentionally left blank.

ATTACHMENT B
PRIMARY CONTAMINANTS OF CONCERN

Properties of the Primary Contaminants of Concern

Contaminant	PEL	TLV	Route(s) of Exposure	Signs and Symptoms of Exposure		Target Organs	IP (eV)	Specific Gravity (g/ml)	VP (mm Hg)	Flash Point (°F)	LEL %	UEL %
				Acute	Chronic							
Benzene	1 ppm	0.5 ppm	Inhalation Ingestion Contact Absorption	Irritation of eyes, skin, nose, and throat, headache, dizziness, nausea, staggered gait, fatigue	Cancer (leukemia), adverse reproductive effects (female fertility, birth defects)	Eyes, skin, respiratory system, blood, CNS, bone marrow	9.24	0.88	75	12	1.2	7.8
Toluene	200 ppm (750 mg/m^3)	50 ppm (188 mg/m^3)	Inhalation Ingestion Contact Absorption	Irritation of eyes, skin, nose, drowsiness, fatigue, weakness, confusion, headache, nausea, dilated pupils	Liver and kidney damage	Eyes, skin, respiratory system, CNS, liver, kidneys	8.82	0.87	21	40	1.1	7.1
Ethylbenzene	100 ppm (435 mg/m^3)	100 ppm (434 mg/m^3)	Inhalation Ingestion Contact Absorption	Irritation of eyes, and skin, may also cause conjunctivitis (eyes)	CNS depression, pulmonary aspiration	CNS, eyes, skin, respiratory system	8.76	0.87	7	55	0.8	6.7
Xylenes (o-, m-, p-isomers)	100 ppm	100 ppm	Inhalation Ingestion Contact Absorption	Irritation of eyes, skin, nose	Permanent brain and nervous system damage	CNS, liver, and urinary system/ kidneys	21	0.864	8	76	1.0	7.0
Radionuclides	As Low As Reasonably Achievable	2 rems per year averaged over 5 years for radiation workers (ACGIH)	Direct contact	Radiation sickness	Cancer	Skin	NA	NA	NA	NA	NA	NA
Aroclor 1254	NA	0.5 mg/m^3	Inhalation Ingestion Contact Absorption	Skin lesions, dark pigmentation of the exposed pores	Eye disorders, kidney disorders and allergies	Skin and kidneys	NA	0.88	NA	295	0.9	7
Aroclor 1260	NA	5 mg/m^3	Inhalation Ingestion Contact Absorption	Skin lesions, dark pigmentation of the exposed pores	Eye disorders, kidney disorders and allergies	Skin and kidneys	NA	0.88	NA	295	0.9	7
Dicamba	NA	NA	Inhalation Contact Absorption	Skin irritation	NA	NA	NA	NA	0.00375	390	NA	NA

Properties of the Primary Contaminants of Concern (Continued)

Contaminant	PEL	TLV	Route(s) of Exposure	Signs and Symptoms of Exposure		Target Organs	IP (eV)	Specific Gravity (g/ml)	VP (mm Hg)	Flash Point (°F)	LEL %	UEL %
				Acute	Chronic							
Heptachlor	NA	0.5 mg/m³	Inhalation Ingestion Contact Absorption	Lethargy, tremors, and stomach cramps	Cancer	CNS, liver, and gastrointestinal tract	NA	NA	NA	NA	NA	NA
Chromium	0.5 mg/m³	0.5 mg/m³	Inhalation Ingestion Contact Absorption	Caustic to skin and mucous membranes	Cancer	Lung, kidney, and liver	NA	2.7	NA	NA	NA	NA

Notes:

PEL = Permissible Exposure Limit
TLV = Threshold Limit Value
IP = Ionization Potential
eV = Electron volt
VP = Vapor Pressure
mm Hg = Millimeters of mercury
°F = Degrees Fahrenheit
LEL = Lower Explosive Limit
UEL = Upper Explosive Limit
% = Percent
ppm = Parts per million
mg/m³ = Milligrams per cubic meter of air
CNS = Central Nervous System
NA = Not Applicable
g/ml = Grams per milliliter
rems = Rontgen-Equivalent in Man
ACGIH = American Conference of Governmental Industrial Hygienists

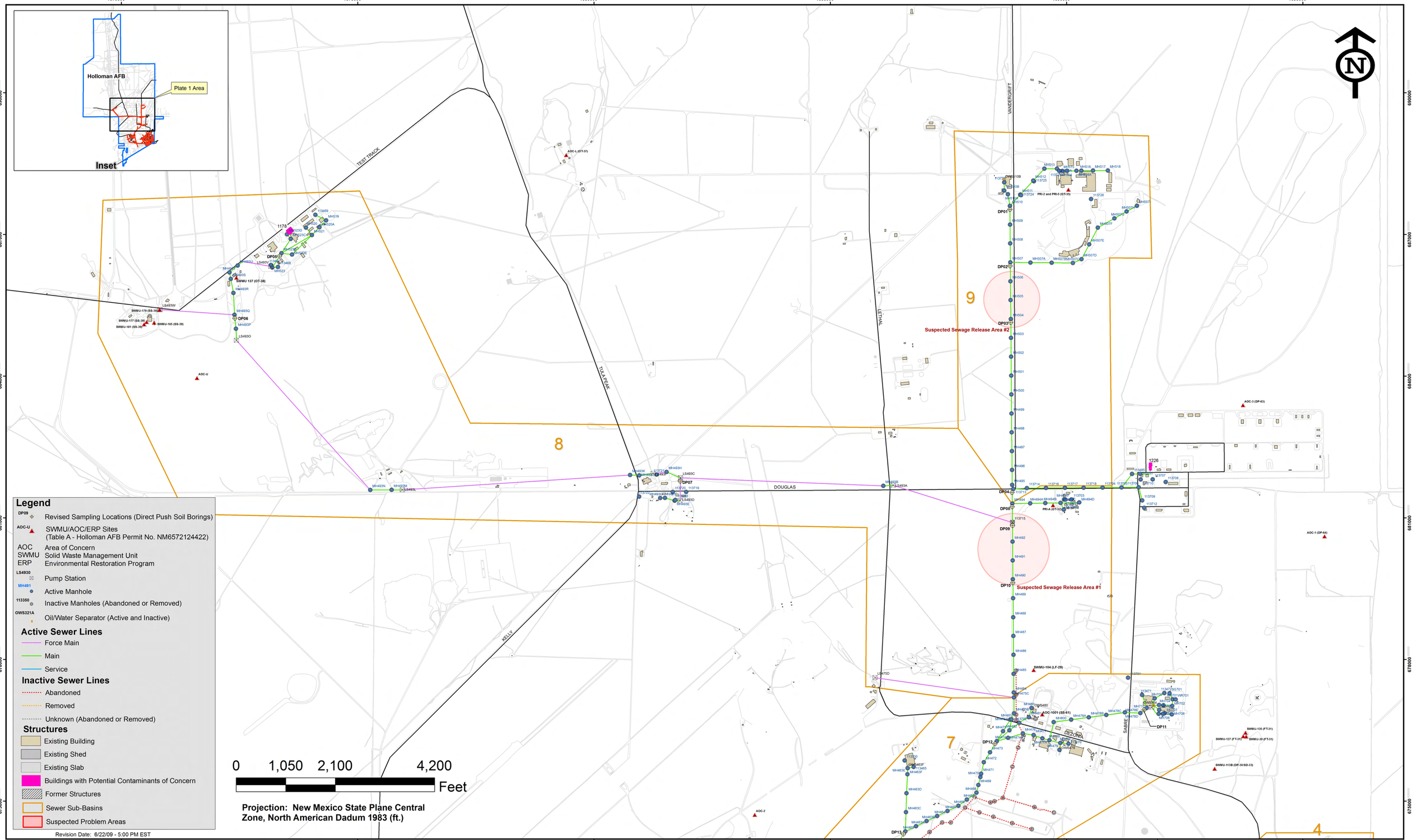

Plate 1 - SWMU-183, Revised Sampling Locations, Northern Sewer Sub-Basins

SWMU-183, Basewide Sewer System, RCRA Facility Investigation Work Plan, Holloman AFB, New Mexico

NATIONVIEW

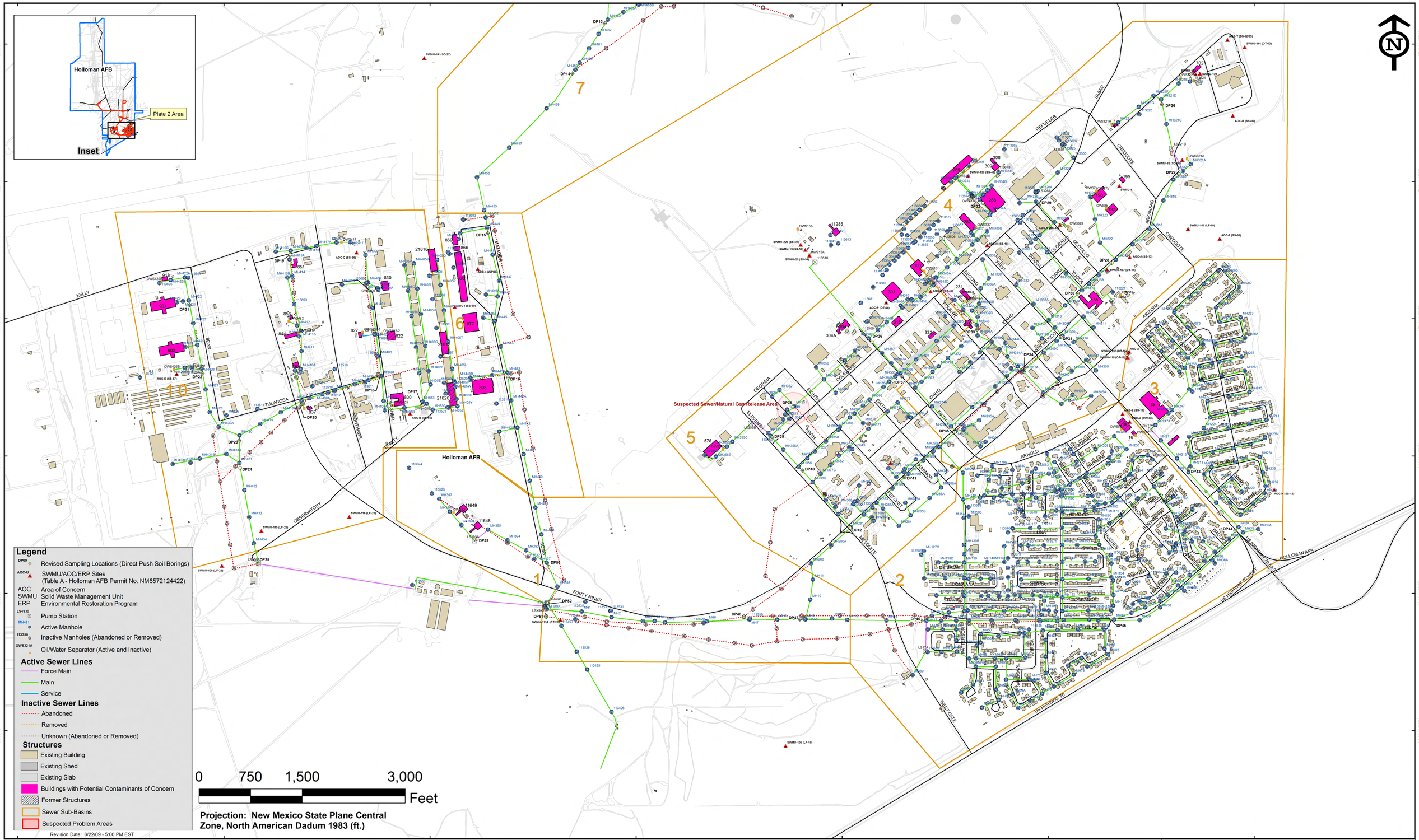

Plate 2 - SWMU-183, Revised Sampling Locations, Southern Sewer Sub-Basins

SWMU-183, Basewide Sewer System, RCRA Facility Investigation Work Plan, Holloman AFB, New Mexico

NATIONVIEW