ENTERED

DEPARTMENT OF THE AIR FORCE
HEADQUARTERS 49TH FIGHTER WING (ACC)
HOLLOMAN AIR FORCE BASE, NEW MEXICO

A. David Budak
Deputy Base Civil Engineer
550 Tabosa Avenue
Holloman AFB NM 88330-8458

APR 1 6 2010

New Mexico Environment Department
Attn: Mr. James P. Bearzi
Hazardous Waste Bureau
2905 Rodeo Park Drive East
Santa Fe NM 87105-6303

Dear New Mexico Environment Department

Holloman AFB is pleased to submit the Final RCRA Facility Investigation Work Plan (redline strikeout version) SWMU 8 for your review.

I certify under penalty of law that this document and all attachments were prepared under my direction or supervision according to a system designed to assure that qualified personnel properly gather and evaluate the information submitted. Based on my inquiry of the person or persons who manage the system, or those persons directly responsible for gathering the information, the information submitted is, to the best of my knowledge and belief, true, accurate, and complete. I am aware that there are significant penalties for submitting false information, including the possibility of fine and imprisonment for knowing violations.

If you have any questions, please contact Mr. David Scruggs of our Asset Management Flight at (575) 572-5395.

16 Apr 10
A. DAVID BUDAK, YF-3, DAFC

Attachment:
Basewide Septic Tank SWMU RFI Work Plan

cc:

(w/Atch)
Mr. David Strasser
Hazardous Waste Bureau
5500 San Antonio Dr. NE
Albuquerque, NM 87109

(w/o Atch)
Mr. Will Moats
Hazardous Waste Bureau
5500 San Antonio Dr. NE
Albuquerque, NM 87109

(w/o Atch)
Ms. Laurie King
USEPA, Region 6 (6PD-F)
1445 Ross Ave., Ste 1200
Dallas, TX 75202-2733

FINAL

RCRA FACILITY INVESTIGATION WORK PLAN
SWMU 8
HOLLOMAN AIR FORCE BASE, NEW MEXICO

Prepared For:

49 CES/CEA
Holloman Air Force Base
New Mexico

Under Contract To:

U.S. Army Corps of Engineers
Albuquerque District, HTRW Branch
4101 Jefferson Plaza Northeast
Albuquerque, New Mexico 87109-3435
USACE Albuquerque District Project No.: KWRD076044

Contract No. W912PL-07-D-0050
Delivery Order No. DM01

March 2010

Prepared by:

1608 13th Avenue South, Suite 160
Birmingham, Alabama 35205
Contract No: W912PL-07-D-0050
NationView Project Number: 8080014.03.01

FINAL
RCRA FACILITY INVESTIGATION WORK PLAN
SWMU 8
HOLLOMAN AIR FORCE BASE, NEW MEXICO

Prepared for:

49 CES/CEA
Holloman Air Force Base
New Mexico

Under Contract to:

U.S. Army Corps of Engineers-
Albuquerque District
HTRW Branch
4101 Jefferson Plaza NE
Albuquerque, New Mexico 87109-3435
USACE Albuquerque District Project No. KWRD076044

Prepared by:

NationView, LLC
1608 13th Avenue South, Suite 160
Birmingham, Alabama 35205
NationView Project No. 8080014.03.01

Contract No. W912PL-07-D-0050
Delivery Order No. DM01

~~January 2009~~March 2010

FINAL
RCRA FACILITY INVESTIGATION WORK PLAN
SWMU 8
HOLLOMAN AIR FORCE BASE, NEW MEXICO

REVIEW SHEET

This Work Plan has been reviewed and approved by:

	David D. Martin	3/23/10 ~~1/9/09~~
David D. Martin Corporate Sponsor	Signature	Date
	Frank Gardner	3/23/10 ~~1/9/09~~
Frank Gardner, P.G. Project Manager	Signature	Date
	J H Moore	3/23/10 ~~1/9/09~~
Jim Moore, P.G. Field Team Leader/Geologist	Signature	Date

This page intentionally left blank.

FINAL
RCRA FACILITY INVESTIGATION WORK PLAN
SWMU 8
HOLLOMAN AIR FORCE BASE, NEW MEXICO

TABLE OF CONTENTS

Acronyms and Abbreviations v

1 Introduction 1-1

1.1 RFI Work Plan Organization 1-1
1.2 Project Objectives 1-2
1.3 Data Quality Objectives 1-3
1.4 HAFB Facility Description and Operational History 1-4
1.5 SWMU 8 Site Description and Background 1-4
1.6 Building 231 Activities and Waste Generation 1-5
1.7 Applicable Screening Criteria 1-5
1.7.1 Soil 1-5
1.7.1.1 VOCs, SVOCs, PCBs, and TAL Metals 1-5
1.7.1.2 Total Petroleum Hydrocarbons 1-6
1.7.2 Groundwater 1-7
1.7.2.1 VOCs, SVOCs, PCBs, and TAL Metals 1-7
1.7.2.2 Total Petroleum Hydrocarbons 1-7
1.7.2.3 Total Dissolved Solids 1-7
1.8 Nature and Extent of Known Contamination 1-7
1.9 Summary of Past Investigations and Remedial Actions 1-8
1.9.1 RCRA Facility Assessment Preliminary Review Report 1-9
1.9.2 Closure Report for Remediation of POL Contaminated Sites 1-9
1.9.3 Characterization of SWMU 8 1-11
1.9.4 Final Closure Report Addendum for Phase II Remediation of POL Contaminated Sites 1-11
1.9.5 SWMU 8 Additional Site Characterization 1-12
1.9.5.1 Soil Sampling Results 1-13
1.9.5.2 Groundwater Sampling Results 1-14
1.9.6 Voluntary Corrective Measures at SWMU 8 1-14

2 Environmental Setting 2-1

2.1 Physiography and Topography 2-1
2.2 Climate 2-1
2.3 Surface Water and Hydrology 2-1
2.4 Regional Geology 2-3
2.5 Regional Hydrogeology 2-4

2.6 Soils 2-5
2.7 Site-Specific Setting 2-6

3 Source Characterization 3-1

3.1 Physical Condition of the Oil/Water Separator 3-1
3.2 Waste Characteristics 3-1

4 Potential Receptors 4-1

4.1 Current Local Uses and Planned Future Uses of Groundwater 4-1
4.2 Current Local Uses and Planned Future Uses of Surface Waters Directly Impacted by the Facility 4-1
4.3 Potential Human Receptors 4-2
4.4 Potential Biological Receptors 4-2
4.4.1 Flora 4-2
4.4.2 Fauna 4-2
4.4.2.1 Invertebrates 4-3
4.4.2.2 Reptiles and Amphibians 4-3
4.4.2.3 Mammals 4-4
4.4.2.4 Birds 4-4
4.5 Endangered or Threatened Species 4-4
4.5.1 Endangered Species 4-4
4.5.2 Threatened Species 4-5
4.5.2.1 Burrowing Owl 4-5
4.5.2.2 White Sands Pupfish 4-5

5 Initial Conceptual Site Model 5-1

5.1 Initial CSM Development 5-1
5.2 Initial CSM Summary Description 5-1

6 Sampling and Analysis Plan for Characterization of Releases of Hazardous Waste 6-1

6.1 Pre-Investigation Requirements 6-1
6.1.1 AF Form 332 6-2
6.1.2 Dig Permit/Utility Clearances 6-2
6.1.3 Site Security 6-2
6.2 Sampling Strategy 6-2
6.2.1 Sampling Objectives 6-2
6.2.2 Field Sampling Location Plan Design Basis 6-5
6.2.2.1 Building 231 Soil Borings and Monitoring Wells 6-6
6.2.2.2 Building 232 Soil Borings and Monitoring Wells 6-7
6.3 Sampling Procedures 6-8
6.3.1 Environmental Media to be Sampled 6-9
6.3.2 Soil Sampling 6-10
6.3.2.1 Soil Sample Locations and Analysis 6-10
6.3.2.2 Direct Push Soil Sampling Procedures 6-11

6.3.3 Monitoring Well Installation Activities....6-12
6.3.3.1 Monitoring Well Locations....6-12
6.3.3.2 Monitoring Well Installation and Development....6-12
6.3.4 Groundwater Sampling....6-14
6.3.4.1 Groundwater Elevations....6-15
6.3.4.2 Surveying....6-15
6.3.5 Documentation....6-22
6.3.6 Decontamination....6-23
6.3.7 Management of Investigation-Derived Waste....6-23
6.4 Sample Analysis....6-24
6.4.1 Data Quality Objectives....6-24
6.4.2 Laboratory Analytical Methods....6-25

7 Risk Assessment Approach....7-1

7.1 Compilation of Data....7-1
7.2 Identification of COPCs....7-2
7.3 Development of the Exposure Model....7-3
7.4 Identification of Target Levels....7-4
7.4.1 Toxicity Values....7-5
7.4.2 Physical and Chemical Properties....7-6
7.4.3 Exposure Factors....7-6
7.4.4 Fate and Transport Parameters....7-7
7.5 Calculation of Representative Concentrations....7-7
7.6 Calculation of Risk Ratios....7-9
7.7 Uncertainty Analysis....7-9

8 Data Management Plan....8-1

8.1 Data Management Strategy....8-1
8.2 Data Type....8-1
8.2.1 Sample Identification System....8-1
8.2.2 Data Recording....8-2
8.2.2.1 Field Data....8-3
8.2.2.2 Laboratory Analytical Data....8-3
8.2.2.3 Photographs....8-4
8.3 Data Reporting....8-4
8.3.1 Tabular Displays....8-5
8.3.2 Graphical Displays....8-5
8.4 Data Archiving....8-6

9 Health and Safety Requirements....9-1

10 Project Management Plan and Schedule of Implementation....10-1

10.1 Management Control Structure....10-1
10.2 Reporting....10-1
10.3 Records Management....10-2

11 References 11-1

Figures

Figure 1-1 Holloman AFB, New Mexico Location Map
Figure 1-2 SWMU 8 Site Location Map
Figure 1-3 SWMU 8 Site Map
Figure 1-4 SWMU 8 Soil Analytical Results Above NMED Action Levels (EBASCO, 1995)
Figure 1-5 SWMU 8 Groundwater Analytical Results Above EPA and NMED Action Levels (Bhate, 2006)
Figure 1-6 SWMU 8 Voluntary Corrective Measures Soil Analytical Results Above NMED Action Levels (Bhate, 2008)
Figure 2-1 Surface Drainages Holloman AFB, New Mexico
~~Figure 2-1 Surface Drainages Holloman AFB~~
Figure 2-2~~1~~ Basewide Groundwater Contour Map Holloman AFB, New Mexico
Figure 2-3 Groundwater Wells Located Within a 4-Mile Radius of Holloman AFB
Figure 2-4 Soil Map Holloman AFB, New Mexico
Figure 2-5 SWMU 8 Potentiometric Surface Map (September, 2009)
Figure 6-1 SWMU 8 Proposed Soil Sampling Locations
~~Figure 6-2 SWMU 8 Proposed Sub-Slab Soil-Vapor Sampling Locations~~
~~Figure 6-3 SWMU 8 Proposed Indoor Air Sampling Locations~~
Figure 6-2~~4~~ SWMU 8 Proposed and Existing Monitoring Well Locations
~~Figure 6-5 Sub-Slab Vapor Point Sampling Train~~

Tables

Table 2-1 Groundwater Wells Located Within a 4-Mile Radius of Holloman Air Force Base
Table 2-2 SWMU 8 Groundwater Elevation Summary (September 2009)
Table 4-1 Plant Species Observed at Holloman Air Force Base
Table 4-2. Herpetofauna Species Observed at Holloman Air Force Base
Table 4-3. Bat Species Observed at Holloman Air Force Base
Table 4-4. Rodent Species Observed at Holloman Air Force Base
Table 4-5. Bird Species Observed at Holloman Air Force Base
Table 6-1 DPT Soil Sampling and Analysis
Table 6-2 Groundwater Sampling and Analysis
~~Table 6-3 Air Sampling and Analysis~~
Table 6-3~~4~~ Sample Containers and Holding Times ~~and Holding Times~~ by Sample Media
Table 10~~9~~-1 Key Personnel and Responsibilities

Attachments

Attachment A SWMU 8 RCRA Facility Investigation USACE Scope of Work
~~Attachment B H&P Mobile Geochemistry Sub-Slab Soil Vapor Standard Operating Procedures~~
Attachment B~~C~~ Geoprobe Systems® Technical Bulletin No. MK3138
Attachment C~~D~~ Geoprobe Systems® Technical Bulletin No. MK3139
Attachment ~~E~~D Bhate Standard Operating Procedure No. 10~~E Field Forms~~

Appendices

Appendix A HAFB Basewide QAPP Addendum
Appendix B Historical Data Summaries
Appendix C NMED Correspondence
Appendix D Site-Specific Addendum to the Basewide Health and Safety Plan

ACRONYMS AND ABBREVIATIONS

AAF	Army Air Field
AF Fm	Air Force Form
amsl	Above mean sea level
ANSI	American National Standards Institute
AOC	Area of Concern
ARAR~~s~~	Applicable or Relevant and Appropriate Requirement
ASTM	American Society for Testing and Materials
ATSDR	Agency for Toxic Substances and Disease Registry
bgs	Below ground surface
Bhate	Bhate Environmental Associates, Inc.
BTEX	Benzene, Toluene, Ethylbenzene, Xylene
CalEPA	California Environmental Protection Agency
CES/CEA	Civil Engineering Squadron/Civil Engineering Asset Management Flight
~~CH_4~~	~~Methane~~
cm/sec	Centimeters per second
COC~~s~~	Chemical~~s~~ or Constituent~~s~~ of Concern
COPC	Chemical of Potential Concern
CSM	Conceptual Site Model
DPT	Direct Push Technology
DQOs	Data Quality Objectives
DRMO	Defense Reutilization Management Office
DRO	Diesel Range Organics
DT325	Geoprobe Systems® DT325 Dual Tube Sampling System
EA	Environmental Assessment
EDD	Electronic Data Deliverable
EM	Exposure Model
ERP	Environmental Restoration Program
ERPIMS	Environmental Restoration Program Information Management System
ESRI	Environmental Systems Research Institute
°F	Degrees Fahrenheit
ft	Feet
ft/ft	Feet per foot

FWENC	Foster Wheeler Environmental Corporation
GAERPC	Guidance for Assessing Ecological Risk Posed by Chemicals
GIS	Geographic Information System
gpd	Gallons per day

ACRONYMS AND ABBREVIATIONS (CONTINUED)

GPS	Global Positioning System
GRO	Gasoline Range Organics
GTI	Groundwater Technology, Inc.
HAFB	Holloman Air Force Base
~~HAFB~~	~~Holloman Air Force Base~~
HASP	Health and Safety Plan
HEAST	Health Effects Assessment Summary Tables
~~" Hg~~	~~Inches of Mercury~~
IDW	Investigation-Derived Waste
INRMP	Integrated Natural Resource Management Plan
IRIS	Integrated Risk Information System
J&E	Johnson & Ettinger
~~L~~	~~Liter(s)~~
LCS	Laboratory Control Sample
LD	Laboratory Duplicate
LIMS	Laboratory Information Management System
MCL	Maximum Contaminant Level
MDL	Method Detection Limit
MGD	Million gallons per day
MRL	Minimal Risk Levels
µg/kg	Micrograms per kilogram
~~µg/m^3~~	~~Micrograms per cubic meter~~
mg/kg	Milligrams per kilogram
mg/L	Milligrams per liter
~~mL~~	~~Milliliter~~
~~mL/min~~	~~Milliliters per minute~~
MS/MSD	Matrix Spike/Matrix Spike Duplicate
NAD	North American Datum

NELAP	National Environmental Laboratory Accreditation Program
NFA	No Further Action
NMAC	New Mexico Administrative Code
NMDGF	New Mexico Department of Game and Fish
NMED	New Mexico Environment Department
NMWQCC	New Mexico Water Quality Control Commission
NMWRRS	New Mexico Water Rights Reporting System
NOD	Notice of Deficiency
NPDES	National Pollution Discharge Elimination System
OEHHA	Office of Environmental Health Hazard
~~O_2~~	~~Oxygen~~
~~OD~~	~~Outer Diameter~~
ORO	Oil Range Organics
OSHA	Occupational Safety and Health Administration
OWS	Oil/water separator
PARCC	Precision, Accuracy, Representativeness, Comparability, Completeness

ACRONYMS AND ABBREVIATIONS (CONTINUED)

PCBs	Polychlorinated biphenyls
~~PARCC~~	~~Precision, Accuracy, Representativeness, Comparability, Completeness~~
~~PCBs~~	~~Polychlorinated biphenyls~~
PCS	Petroleum Contaminated Soil
PID	Photoionization Detector
PMP	Project Management Plan
POLs	Petroleum, oil, and lubricants
PPE	Personal Protection Equipment
PPRTV	Provisional Peer Reviewed Toxicity Values
~~POLs~~	~~Petroleum, oil, and lubricants~~
~~PPE~~	~~Personal Protection Equipment~~
~~ppm~~	~~Parts per million~~
PQL	Practical Quantitation Limit
PVC	Polyvinyl Chloride
QA	Quality Assurance
QA/QC	Quality Assurance/Quality Control
QAPP	Quality Assurance Project Plan
QC	Quality Control
RAGS	Risk Assessment Guidance for Superfund

RAM	Risk Assessment Management
~~RBSL~~	~~Risk Based Screening Levels~~
RBCA	Risk Based Corrective Action
RCRA	Resource Conservation and Recovery Act
RFI	RCRA Facility Investigation
RLs	Reporting Limits
RSL	Regional Screening Level
SAP	Sampling and Analysis Plan
SOP	Standard Operating Procedure
SSHO	Site Safety and Health Officer
SSLs	Soil Screening Levels
SVOC~~s~~	Semi-V~~v~~olatile O~~o~~rganic ~~c~~Compound~~s~~
SWMU	Solid Waste Management Unit
TAL	Target Analyte List
TCEQ	Texas Commission on Environmental Quality
TCLP	Toxicity Characteristic Leaching Procedure
TDS	Total Dissolved Solids
TPH	Total Petroleum Hydrocarbons
TRPH	Total Recoverable Petroleum Hydrocarbons
TRRP	Texas Risk Reduction Program
UCL	Upper Confidence Limit
USACE	United States Army Corps of Engineers
USCS	Unified Soil Classification System

ACRONYMS AND ABBREVIATIONS (CONTINUED)

USDA	United States Department of Agriculture
USEPA	United States Environmental Protection Agency
USFWS	United States Fish and Wildlife Service
UTL	Upper Tolerance Limit
~~UTM~~	~~Universal Transverse Mercator~~
VCM	Voluntary Corrective Measures
VOC	Volatile Organic Compound
WRCC	Western Regional Climate Center
WWTP	Wastewater Treatment Plant

1 INTRODUCTION

NationView, LLC, has been retained by the U.S. Army Corps of Engineers (USACE), Albuquerque District under contract W912PL-07-D-0050, Delivery Order No. DM01, to conduct a Resource Conservation and Recovery Act (RCRA) Facility Investigation (RFI) of Solid Waste Management Unit (SWMU) 8 (Building 231 Oil/Water Separator) at Holloman Air Force Base (HAFB), New Mexico.

The Albuquerque District Scope of Work for the SWMU 8 RFI dated June 3, 2008 (included in Attachment A of this Work Plan), generally defines the additional characterization field sampling and analysis activities. This RFI Work Plan provides the relevant site specific requirements as outlined in a Notice of Disapproval issued by the New Mexico Environment Department (NMED) on August 31, 2009 (included in Appendix C-5 of this Work Plan), for investigation activities at SWMU 8. Responses to the NMED comments are included in Appendix C-6 of this Work Plan.

The objective of this additional data collection effort is to determine the nature and extent of soil and groundwater contamination underneath Buildings 231 and 232 along with performing a site specific risk based evaluation of the site. The SWMU 8 RFI is being performed according to the requirements set forth in the HAFB Hazardous Waste Facility Permit No. NM6572124422; Appendix 4-B RCRA Facility Investigation Outline, dated February 2004 (HAFB RCRA Permit) (NMED, 2004a).

1.1 RFI Work Plan Organization

This Work Plan will serve as the primary working document for the investigation of potential hazardous waste releases from SWMU 8 (former Building 231 Oil/Water Separator). The Work Plan is organized according to the requirements outline set forth in Appendix 4-B of the HAFB RCRA Permit as follows:

- Section 1 presents a summary of the RFI approach and its key elements, project and data quality objectives, HAFB background information, and relevant existing assessment data.
- Section 2 details the environmental setting in terms of hydrogeology, soils, surface water, and climate.
- Section 3 provides source characterization information.
- Section 4 provides information on the human populations and environmental systems as potential receptors that could be affected by a potential release from an oil/water separator.

- Section 5 presents the Initial Conceptual Site Model (CSM) for the site, including summary narrative, an outline of CSM elements, including; data gathering requirements, release mechanisms, status, and required actions.

- Section 6 presents the Sampling and Analysis Plan (SAP) for the characterization of soil~~, soil-vapor, indoor air,~~ and groundwater for this RFI effort, as well as the specific sampling procedures, sample analysis and related sample quality assurance/quality control (QA/QC) measures to be employed during the conduct of the investigation.

- Section 7 presents the methodologies that will be used for conducting a risk assessment.

- Section 8~~7~~ describes the project quality assurance and the data management plan that will be used to support this RFI.

- Section 9~~8~~ describes the Health and Safety requirements for this RFI.

- Section 10~~9~~ presents the project management plan (PMP), including the project organization, and team member roles and responsibilities, reporting requirements, and records management.

- Section 11~~10~~ provides full references of the publications used to support the development of this document.

- The figures and tables referenced throughout this Work Plan are included under separate tabs following the text

- Appendices provide other elements of the Work Plan, such as the Basewide Quality Assurance Project Plan (QAPP) Addendum, the summary of past investigations and remedial actions, NMED correspondence, and a Site-Specific Addendum to the Basewide Health and Safety Plan.

- Attachments present other key elements of the Work Plan, such as the USACE Albuquerque District Scope of Work for SWMU 8,~~ H&P Mobile Geochemistry Sub-Slab Soil-Vapor Standard Operating Procedures, Field Forms, and Geoprobe Systems® Standard Operating Procedures for soil sampling with Dual Tube 325 and Macro Core® MC5 tooling~~ along with soil and groundwater Standard Operating Procedures (SOPs) to be followed during the implementation of the SWMU 8 RFI.

1.2 Project Objectives

The primary project objectives of the SWMU 8 RFI are to:

1. Collect soil samples from below Building 231 and Building 232 to determine the nature and extent of soil contamination beneath these structures,

~~2.Perform soil-vapor sampling below Building 231 and Building 232, and indoor air sampling within these buildings, to assess the potential migration of hydrocarbons into indoor air from the soil,~~

~~3.~~2. Install additional monitoring wells to determine the nature and extent of groundwater contamination beneath Buildings 231 and 232,

~~4.~~3. Collect sufficient analytical and geotechnical data in order to complete a site-specific risk assessment of the exposure pathways, and,

~~5.~~4. Collect the proper data to meet the data quality objectives (DQOs) to support closure of the site based on guidance from the NMED.

1.3 Data Quality Objectives

The DQO process is designed to generate performance criteria for the collection of new data. Performance criteria represent the full set of specifications that are needed to design a data collection effort such that newly-collected data are of sufficient quality and quantity to address the primary project objectives outlined in Section 1.2 of this Work Plan.

The steps of the DQO process are:

1. Define the nature of the problem to be studied and develop a conceptual model of the environmental hazard to be investigated (see Section 5 of this Work Plan).

2. State the decisions or estimates that need to be made.

3. Determine the type(s) of data needed for decision-making.

4. Develop a decision making process or rules that define how the data will be used to draw conclusions from the investigation results (see Section 6.4 of this Work Plan).

5. Establish acceptable quantitative criteria on the quality and quantity of the data to be collected, relative to the ultimate use of the data. These criteria are known as performance criteria, or DQOs (see Sections 1.7, 6.2, and 6.4 of this Work Plan).

6. Design a data collection program that will generate data meeting the quantitative and qualitative criteria specified in Step 5 which includes:

    a. Type of data (see Sections 6.3 and Section 6.4 of this Work Plan),

b. Number, location, and physical quantity of samples (see Sections 6.2 and 6.4 of this Work Plan), and
c. QA and QC activities to ensure that sampling design and measurement errors are managed sufficiently to meet the performance or acceptance criteria specified in the DQOs. The DQO criteria include measures of precision, accuracy, representativeness, comparability, and completeness (PARCC).

The results of this process are used to develop a ~~Quality Assurance Project Plan (~~QAPP~~)~~ (see the HAFB Basewide QAPP [Bhate Environmental Associates, Inc. (Bhate), 2003a] and the HAFB Basewide QAPP Addendum included in Appendix A of this Work Plan).

1.4 HAFB Facility Description and Operational History

HAFB is located in south central New Mexico, in the northwest central part of Otero County, approximately 75 miles north-northeast of El Paso, Texas (Figure 1-1). HAFB has a population of 6,000 and supports approximately 21,000 active-duty Air Force, National Guard, Air Force Reserve, retirees, civilians, and their family members. HAFB occupies 59,639 acres in the northeast quarter of Section 1, Township 17 South, Range 8 East. The White Sands Missile Range testing facilities occupy additional land extending northward from the Base. Private and public owned lands border the remainder of HAFB. The major highway servicing HAFB is Highway 70, which runs southwest from the town of Alamogordo and separates HAFB from publicly owned lands to the south. Alamogordo is located approximately 7 miles east of the base and has a population of approximately 35,000.

HAFB was first established in 1942 as Alamogordo Army Air Field (AAF). From 1942 through 1945, Alamogordo AAF served as the training ground for over 20 different flight groups, flying primarily B-17s, B-24s, and B-29s. After World War II, most operations had ceased at the Base. In 1947, Air Material Command announced the air field would be its primary site for the testing and development of un-manned aircraft, guided missiles, and other research programs. On January 13, 1948, the Alamogordo installation was renamed Holloman Air Force Base, in honor of the late Col. George V. Holloman; a pioneer in guided missile research. In 1968, the 49th Tactical Fighter Wing arrived at HAFB and has remained since, conducting fighter aircraft training and operations. HAFB has also served as the German Air Force's Tactical Training Center since 1996.

1.5 SWMU 8 Site Description and Background

SWMU 8 (former Building 231 Oil/Water Separator) is located on the south side of Building 231. Building 231 (Auto Hobby Center) is located on the Main Base at Holloman (Figure 1-2). The physical address of Building 231 is 642 West Connecticut

Avenue, which is on the west side of the intersection of Second Street and Connecticut Avenue (Figure 1-3). The in-ground oil/water separator (OWS) at SWMU 8 was removed in August of 1995 (Ebasco Services, Inc, 1995). The in-ground OWS was located east of the covered walkway which connected Buildings 231 and 232 and was approximately 4 feet wide, 6 feet long, and 4 feet deep, with the top of the unit raised a few inches above the ground surface (A.T. Kearney, Inc., 1988).

1.6 Building 231 Activities and Waste Generation

Records indicate that the OWS accepted wash water from a heavy equipment wash rack located adjacent to the unit. Over a period of years the OWS released wash water rinsate containing oils, detergents, and fuels into the surrounding soil (Bhate, 2006c~~b~~). Building 231 is currently used as an Auto Hobby Center at HAFB and a new underground OWS has been installed on the west side of the building (Figure 1-3).

1.7 Applicable Screening Criteria

Analytical data obtained from previous investigations and the data collected during this RFI will be evaluated against the applicable regulatory screening criteria that are specified in Appendix 4-F *Action Levels and Cleanup Levels* of the Holloman AFB Hazardous Waste Permit No. NM6572124422 (NMED, 2004b). The soil and groundwater data evaluation will consist of a direct comparison to the respective Applicable or Relevant and Appropriate Requirement (ARAR) action level screening criteria. The applicable screening criteria will be presented on the RFI Report analytical data summary tables for the analytes and media of concern. The maximum detected concentration of each contaminant which is detected above the reporting limit will be used for comparison. In the event that the maximum concentration of a contaminant exceeds the background reference datum (pending NMED approval of the *Basewide Background Study Report, Holloman Air Force Base, New Mexico* [NationView|Bhate JV III, 2009]), a statistical comparison of the data populations may be conducted. The following sections present the regulatory criteria that will be used to evaluate the analytical data.

1.7.1 Soil

1.7.1.1 VOCs, SVOCs, PCBs, and TAL Metals

The residential Soil Screening Levels (SSLs) established in NMED's *Technical Background Document for Development of Soil Screening Levels, Revision 5.0* (NMED, 2009) will be used as the action levels for volatile organic compounds (VOCs), semi-volatile organic compounds (SVOCs), polychlorinated biphenyls (PCBs), and target analyte list (TAL) metals. Additionally, all inorganic constituents (e.g., TAL metals) will be compared to their respective HAFB Background, Combined Soil, Upper Tolerance

Limits (UTLs) (pending NMED approval of the *Basewide Background Study Report, Holloman Air Force Base, New Mexico* [NationView|Bhate JV III, 2009]). For constituents with no established NMED residential SSL, the U.S. Environmental Protection Agency (USEPA) Regional Screening Levels (RSLs) (USEPA, 2009b) will be used as the action level.

1.7.1.2 Total Petroleum Hydrocarbons

The action levels for Total Petroleum Hydrocarbons (TPH) are established in the *New Mexico Environment Department TPH Screening Guidelines* (NMED, 2006). The TPH screening guideline (residential direct exposure) for an unknown oil of 800 milligrams per kilogram (mg/kg) will be used as the action level for total TPH concentrations (combined Gasoline Range Organics [GRO], Diesel Range Organics [DRO], and Oil Range Organics [ORO]) during this investigation.

~~Air~~

~~Air sampling for this investigation will consist of indoor air and soil-vapor sampling.~~

~~**Indoor Air**~~

~~Indoor air data will be compared with the residential allowable indoor inhalation levels included in the New Mexico *Underground Storage Tank Bureau Guidelines for Corrective Action* (NMED, 2000). Risk-based screening levels (RBSLs) established in this document will be used as the action levels for VOCs posing an inhalation hazard in Buildings 231 and 232.~~

~~**Soil-Vapor**~~

~~Soil-vapor data will be compared with the residential allowable indoor inhalation levels included in the New Mexico *Underground Storage Tank Bureau Guidelines for Corrective Action* (NMED, 2000). Note that the allowable indoor inhalation levels are the allowable concentrations in the breathing zone, not for sub-slab soil-vapor. Soil-vapor concentrations will reduce as vapors migrate indoors and mix with the air in the enclosed space, resulting in significantly lower indoor air concentrations in comparison to soil-vapor.~~

~~A shallow soil-vapor to indoor air attenuation factor of 0.01 will be used for comparing sub-slab soil-vapor samples to the NMED guidelines mentioned above for indoor air. The attenuation factor of 0.01 states that the indoor air concentration would not be expected to exceed 1/10th of the concentration immediately below the foundation (USEPA, 2002). Based on this attenuation factor, allowable sub-slab values will be calculated by multiplying the NMED allowable indoor air level by a factor of 10 (i.e. the benzene RBSL of 2.66 micrograms per cubic meter [µg/m^3] [NMED, 2000] would be 26.6 µg/m^3 with the attenuation factor).~~

1.7.2 Groundwater

1.7.2.1 VOCs, SVOCs, PCBs, and TAL Metals

There are two applicable standards for groundwater: New Mexico Water Quality Control Commission (NMWQCC) groundwater standards for contaminants (New Mexico Administrative Code [NMAC] 20.6.2.3103) and the USEPA's *National Primary Drinking Water Regulations* (USEPA, 2009a) Maximum Contaminant Levels (MCLs). The lower of the two standards will be used as action levels for VOCs, SVOCs, PCBs, and TAL metals in groundwater. Additionally, all detected inorganic constituents (e.g., TAL metals) will be compared to their respective HAFB Background, Dissolved Metals, Groundwater UTLs (pending NMED approval of the *Basewide Background Study Report, Holloman Air Force Base, New Mexico* [NationView|Bhate JV III, 2009]).

1.7.2.2 Total Petroleum Hydrocarbons

The action levels for TPH are established in the *New Mexico Environment Department TPH Screening Guidelines* (NMED, 2006). The NMED TPH screening guideline for unknown oil (50.0 milligrams per liter [mg/L]) will be the action level that will be compared to total TPH concentrations (GRO, DRO, and ORO) detected in groundwater (Table 2b, NMED, 2006).

1.7.2.3 Total Dissolved Solids

There are two applicable standards for total dissolved solids (TDS) detected in groundwater: NMWQCC groundwater standards for contaminants (NMAC 20.6.2.3103) and the USEPA's *National Primary Drinking Water Regulations* Secondary MCLs (USEPA, 2009a). The lower of the two standards will be used as the action levels for TDS. Additionally, TDS will be compared to the HAFB Background, Total Groundwater UTL (pending NMED approval of the *Basewide Background Study Report, Holloman Air Force Base, New Mexico* [NationView|Bhate JV III, 2009]).

~~1.7~~1.8 Nature and Extent of Known Contamination

Previous investigations and excavation activities have identified TPH~~s (gasoline and diesel range organics)~~ contamination in the soil surrounding SWMU 8. At present, the nature and extent of soil contamination beneath Buildings 231 and 232 resulting from ~~the~~ historical releases at SWMU 8 (former Building 231 Oil/Water Separator) have not been completely defined. Petroleum contaminated soil (PCS) remedial actions (excavations) conducted by Ebasco Services (1995), ~~and~~ Foster Wheeler (1997), and Bhate (2008) have removed approximately ~~53~~ 133 cubic yards of PCS from the SWMU 8 site. Excavation soil sampling indicates that ~~not~~ all PCS has been removed except for that which lies beneath Buildings 231 and 232. Three groundwater monitoring wells have been installed at SWMU 8 (Bhate, 2006c~~b~~). Although the nature of the

groundwater contamination at this site has been characterized, more wells are needed to ensure that the horizontal extent has been defined beneath Buildings 231 and 232.

~~1.8~~1.9 Summary of Past Investigations and Remedial Actions

This section presents an overview of the previous investigations and remedial actions conducted at SWMU 8. Since 1988 this SWMU has been the subject of one preliminary review/visual site inspection, two environmental investigations, and three~~two~~ PCS remedial (removal) actions. This section provides a historical overview and chronology of the previous inspections, investigations, and removal actions that were conducted from 1988 through 2008~~6~~. The chronology of previous investigations at SWMU 8 is based on information provided in the reports referenced below. Select analytical results summary tables, figures depicting sampling locations, soil boring logs, monitoring well construction diagrams, and waste manifests for these previous investigations and PCS removal actions are included in Appendix B of this Work Plan.

- *RCRA Facility Assessment Preliminary Review/Visual Site Inspection Report*, 1988, A.T. Kearney, Inc., and DPRA, Inc.
- *Closure Report for Remediation of POL* [Petroleum, Oil, and Lubricants] – *Contaminated Sites and Oil/Water Separator Removals, Holloman Air Force Base, New Mexico, July – November 1995,* 1995, EBASCO Services, Inc., and Groundwater Technology Government Services, Inc.
- *Additional Characterization of POL-Contaminated Sites SWMU-3, SWMU-8, SWMU-36, SWMU-123 and OT-44, Holloman Air Force Base, New Mexico,* 1996, Groundwater Technology Government Services, Inc.
- *Final Closure Report Addendum for Phase II Remediation of POL-Contaminated Sites and Oil/Water Separator and Waste Oil Tank Removals, Holloman Air Force Base, New Mexico,* 1997, Foster Wheeler Environmental Corporation.
- *Draft Voluntary Corrective Measures Work Plan SWMU 8 Soil Remediation Holloman Air Force Base, New Mexico,* 2005, Bhate Environmental Associates, Inc.
- *Memorandum Scope of Work for Soil and Groundwater Sampling and Analysis, Holloman Air Force Base, New Mexico,* May 2, 2006, Bhate Environmental Associates, Inc.

- *Technical Memorandum Letter Report for SWMU 8 Soil and Groundwater Sampling and Analysis, Holloman AFB, New Mexico,* August 2, 2006, Bhate Environmental Associates, Inc.

- ~~*Final Voluntary Corrective Measures Work Plan SWMU 8 Soil Remediation Holloman Air Force Base, New Mexico,* 2008, Bhate Environmental Associates, Inc.~~

- Figures and analytical results from the Voluntary Corrective Measures, SWMU 8 Soil Remediation activities conducted by Bhate in 2008.

Each of these actions is described below.

~~1.8.1~~1.9.1 RCRA Facility Assessment Preliminary Review Report

The RCRA Facility Assessment Report (A.T. Kearney, 1988) identified the Building 231 Oil/Water Separator as SWMU 8. The top of the in-ground OWS was raised a few inches above the ground surface and was covered with a metal lid. The sides and bottom of the unit were constructed of concrete and the ground surface surrounding the unit was covered with drain rock. The OWS had a capacity of 300 gallons, and was approximately 6 feet (ft) long by 4 ft wide and 4 ft deep.

The OWS was used to collect wash water, oil, and hydraulic fluid from the vehicle maintenance shop operation (Building 231). During a visual inspection of the OWS it was noted that the concrete sides of the unit appeared to be in good condition, and that the bottom was covered with liquid, and therefore could not be viewed. Regular inspections were conducted by Holloman engineers to assure the integrity of the unit. Waste oil from the unit was transferred to the Defense Reutilization Management Office (DRMO) Waste Storage Area, and wastewater effluent was discharged to the Wastewater Treatment Plant (WWTP). The RCRA Facility Assessment Report concluded that a release had occurred from the OWS to soil and/or groundwater. Stained soils on the north side of the unit, around the cleanout pipe were thought to be the result of spills, rather than overflow. No further action was suggested at this time for SWMU 8.

~~1.8.2~~1.9.2 Closure Report for Remediation of POL Contaminated Sites

The *Closure Report for Remediation of POL – Contaminated Sites and Oil/Water Separator Removals* (EBASCO, 1995) described OWS removal, remedial excavation, confirmation sampling, and reclamation activities at SWMU 8. The OWS received rinsate containing water, oils, detergents, and fuels from a heavy equipment washrack

located at adjacent Building 231. Data for VOCs, SVOCs, and metals were not available prior to OWS removal.

The initial SWMU 8 remedial (removal) action was conducted by EBASCO Services, Inc., and took place during August 1995 (Ebasco, 1995). Approximately 21 cubic yards (28 tons) of PCS was removed at this time. Four native soil confirmation samples were collected from the excavation corners (SWMU-8-01-7 through SWMU-8-04-7), and one form the center of the excavation (SWMU-8-05-7). The sample locations are shown on Figure 10-1 in Appendix B-1 of this ~~report~~Work Plan.

Total recoverable petroleum hydrocarbons (TRPH) concentrations above the current NMED TPH Screening Guideline for an unknown oil of 800 mg/kg (NMED, 2006~~b~~) were detected in all 5 samples. TRPH concentrations of 23,000; 31,000; 6,500; 1,200; and 940 mg/kg were detected in samples SWMU-8-01-7, SWMU-8-02-7, SWMU-8-03-7, SWMU-8-04-7, and SWMU-8-05-7 respectively.

Several VOC analytes in USEPA Method 8240 were~~ also~~ detected in samples SWMU-8-01-7 and SWMU-8-02-7. No VOC analytes in USEPA Method 8240 were detected above the laboratory quantitation limits in samples SWMU-8-03-7 through SWMU-8-05-7. In the SVOC samples, naphthalene concentrations were present in SWMU-8-01-7 and SWMU-8-05-7. In addition, 2-methylnaphthalene concentrations were present in SWMU-8-01-7 through SWMU-8-03-7. None of the other SVOC analytes in USEPA Method 8270 were detected above laboratory quantitation limits in any of the samples. Additionally, all detected VOCs and SVOCs were below the current NMED SSLs (NMED, ~~2006a~~2009) and/or USEPA RSLs (USEPA, 2009b).

EPA 6000/7000 Series analytical results indicated various metals in all five samples. All metals were detected below the current NMED SSLs. A~~The a~~nalytical results for VOCs, SVOCs, and TAL metals are summarized in Table 10-2 in Appendix B-1 of this Work Plan. Confirmation soil sample locations and analytical results from the EBASCO OWS removal and remedial excavation which exceeded current NMED Residential SSLs, USEPA RSLs, and/or NMED TPH Screening Guidelines are presented on Figure 1-4 of this Work Plan.

The excavated contaminated soil was stockpiled and sampled for off site disposal. Based on the analytical results from the stockpile samples (see Table 10-3 in Appendix B-1 of this Work Plan) the 21 cubic yards of contaminated soil was transported offsite as non-hazardous waste to the Rhino Environmental Services, Inc., landfarm facility located north of Newman, New Mexico for disposal and treatment in early October 1995. Copies of the waste manifests and weight certificates/receipts are also included in Appendix B-1.

Due to the elevated TRPH detected in all five excavation sidewall samples and one bottom sample, the Closure Report (Ebasco, 1995) recommended further delineation

and remediation of the remaining PCS (detected in samples SWMU-8-01-7 through SWMU-8-05-7). Additional investigation and in-situ remediation activities were planned for the site in 1996.

~~1.8.3~~1.9.3 Characterization of SWMU 8

Characterization to delineate the extent of subsurface soil in excess of 1,000 mg/kg (historical TPH action level) at SWMU 8 was conducted by Groundwater Technology, Inc. (GTI), in February 1996. Four soil borings (DP-1 through DP-3, and DP-5) were advanced with direct push technology (DPT) drilling methods during this sampling event (see Figure 3 in Appendix B-2 of this Work Plan). Each borehole was advanced to 12 ft below ground surface (bgs), sampled continuously, and field screened for VOCs with a photoionization detector (PID). Two samples from each boring were analyzed for TRPH. Boring logs with PID screening results are provided in Appendix B-2 of this Work Plan.

The analytical results for these samples are summarized in Table 3 in Appendix B-2 of this Work Plan. TRPH was not detected in any of the samples collected from the boreholes installed in the vicinity of the former Building 231 Oil/Water Separator (SWMU 8). The GTI letter report stated that TRPH was not quantified under the slab at Building 231, and that based on the locations of the four borings (see Figure 3 in Appendix B-2 of this Work Plan), it appeared that delineation of TRPH detected at the OWS was complete.

~~1.8.4~~1.9.4 Final Closure Report Addendum for Phase II Remediation of POL Contaminated Sites

Five closure samples (SWMU-8-01-7 through SWMU-8-05-7) from the initial PCS removal action at SWMU 8 conducted by EBASCO Services in 1995 exceeded the current TPH Screening Guideline for an unknown oil of 800 mg/kg. After the first phase of remediation in 1995 it was discovered that contaminated soil extended beyond what had been originally anticipated. Based on an agreement between NMED and HAFB, soil with TRPH concentrations exceeding 1,000 mg/kg (TPH action level at the time) that extended under large structures would not require remediation if this soil posed no potential health risk. As a result, additional excavation activities were planned to remove all TRPH-contaminated soil exceeding 1,000 mg/kg that did not extend under Buildings 231 and 232.

In April 1997, Foster Wheeler Environmental Corporation (FWENC) resumed remedial activities and removed an additional 31.8 cubic yards (43 tons) of PCS from an excavation that extended eastward from the eastern edge of the original SWMU 8 excavation (FWENC, 1997). Representative samples of in-place and stockpiled soil were also collected during the second remedial action. The four excavation sidewall samples (see Figure 4-1 in Appendix B-3 of this Work Plan) were analyzed for TRPH;

VOCs; SVOCs; benzene, toluene, ethylbenzene, xylene (BTEX); and metals. VOC and SVOC analytical results for the Phase II excavation confirmation samples did not exceed the current NMED SSLs (NMED, ~~2006a~~2009). TRPH concentrations ranged from not-detected to 78 mg/kg and were all below the current TPH Screening Guideline for an unknown oil of 800 mg/kg (NMED, 2006~~b~~). The analytical results for these samples are provided in Table 4-1 in Appendix B-3 of this Work Plan.

The excavated contaminated soil was stockpiled and sampled for off site disposal. One composite soil stockpile sample was collected and analyzed for TRPH, Toxicity Characteristic Leaching Procedure (TCLP) constituents (VOCs, SVOCs, and metals), BTEX, lead, and RCRA characteristics (FWENC, 1997). As shown in Table 4-1 of Appendix B-3 of this Work Plan, the analytical result for TRPH was 36 mg/kg. All detections of VOCs, SVOCs, BTEX, and metals were below their respective NMED SSLs (NMED, ~~2006a~~2009). Based on the analytical results from the stockpile sample, the 38.1-cubic yards of PCS from the second excavation was transported offsite as non-hazardous waste to the Rhino Environmental Services, Inc., landfarm facility located north of Newman, New Mexico for disposal and treatment. Copies of the waste manifests and weight certificates/receipts are also included in Appendix B-3 of this Work Plan.

No further excavation of contaminated soil was possible at the site to the west of samples SWMU-8-01-7 and SWMU-8-02-7 (initial PCS removal action, Ebasco 1995) due to a covered walkway which connected~~ing~~ Building 231 and 232. Foster Wheeler requested that No Further Action (NFA) be granted for SWMU 8 because 80-90 percent of TRPH-contaminated soil had been excavated, and no further excavation was possible. The second excavation was backfilled with clean soil (FWENC, 1997).

~~1.8.5~~1.9.5 SWMU 8 Additional Site Characterization

A Notice of Deficiency (NOD) letter from NMED to HAFB dated April 14, 2006 (included in Appendix C-1 of this Work Plan) stated the Base needed to conduct additional site characterization activities prior to initializing the SWMU-8 Voluntary Corrective Measures Soil Remediation Work Plan (Phase III PCS excavation). This letter also required HAFB to utilize the residential NMED TPH Screening Guideline for an "unknown oil" (800 mg/kg) for performing all subsequent work at SWMU 8.

On behalf of HAFB, Bhate submitted a response letter to this NOD from the NMED on June 12, 2006 (included in Appendix C-2 of this Work Plan). In the response letter, Bhate agreed to make appropriate changes to the *Draft Voluntary Corrective Measures* [VCM] *Work Plan* (Bhate, 2005) based on NMED comments. Bhate also stated that additional delineation of soil and groundwater was performed in May 2006, based on the *Memorandum Scope of Work for Soil and Groundwater Sampling and Analysis* (Bhate, ~~2006a~~2006b). This Work Plan was provided and approved by NMED prior to the performance of the characterization.

In response to the NMED NOD dated April 14, 2006, Bhate was subcontracted to address the recommendations made by NMED concerning further site characterization. The primary objective of this investigation was to characterize the remaining soil contamination at the site (that was not underneath the adjacent structures) and to install and sample groundwater monitoring wells. This additional investigational work had to be completed prior to approval of the SWMU 8 VCM Work Plan. The field work for the SWMU 8 Additional Site Characterization was conducted in accordance with the *Memorandum Scope of Work for Soil and Groundwater Sampling and Analysis* (Bhate, ~~2006a~~2006b) which was verbally approved by the NMED. The following information was obtained from the *Technical Memorandum Letter Report for SWMU 8 Soil and Groundwater Sampling and Analysis, Holloman AFB, New Mexico* (Bhate, ~~2006b~~2006c).

A total of three DPT soil borings were advanced at SWMU 8 in May 2006. The three soil borings were converted into 1-inch flush mount groundwater monitoring wells with 0.02-inch slot pre-packed polyvinyl chloride (PVC) screens. One soil sample was collected from SWMU-8-DP01 and SWMU-8-DP02 for laboratory analysis. A soil sample was not collected from SWMU-8-DP03 as this borehole was installed within the clean backfill from the Phase II excavation. Appendix B-4 of this Work Plan contains the boring logs and well construction diagrams for this investigation. Three groundwater samples and a round of water levels were collected from the three monitoring wells on June 7, 2006. The locations of the DPT soil borings and subsequent monitoring wells are illustrated on Figure 1 in Appendix B-4 of this Work Plan.

Table 1 in Appendix B-4 of this Work Plan presents the groundwater elevation data collected from the three monitoring wells and a potentiometric surface map was prepared using the data (see Figure 2 in Appendix B-4 of this Work Plan). The contour map indicates that groundwater flow was to the west-southwest across the site at a gradient of approximately 0.013 feet per foot (ft/ft).

~~1.8.5.1~~1.9.5.1 Soil Sampling Results

The three soil samples (including one duplicate) were analyzed for VOCs, SVOCs, TPH-GRO, TPH-DRO, TPH-ORO, TAL metals, and PCBs. Table 2 in Appendix B-4 of this Work Plan presents the analytical results for soil samples collected from the boreholes converted into monitoring wells.

One VOC (naphthalene) was detected in the soil sample collected from SWMU-08-DP01-5; all other VOCs were not detected. The estimated concentration of naphthalene (2.7 micrograms per kilogram [µg/kg]) was well below the NMED SSL (NMED, ~~2006a~~2009) for naphthalene of ~~79.5~~45 mg/kg. No other SVOCs, TPH (GRO/DRO/ORO), or PCBs were detected. Additionally all TAL metals detected in the subsurface soil samples were below their respective SSLs.

~~1.8.5.2~~1.9.5.2 Groundwater Sampling Results

The four groundwater samples (including one duplicate) collected from monitoring wells SWMU-8-DP01, SWMU-8-DP02, and SWMU-8-DP03 were analyzed for VOCs, SVOCs, PCBs, TAL metals, and TDS. In addition to these analytes, the groundwater sample from SWMU-8-DP01 was analyzed for TPH (DRO/ORO), while groundwater samples from SWMU-8-DP02 and SWMU-8-DP03 were analyzed for TPH (GRO/DRO/ORO) (see Table 3 in Appendix B-4 of this Work Plan). Low concentrations of four VOCs (bromodichloromethane, chloroform, dibromochloromethane, and o-dichlorobenzene) were detected in the groundwater samples from the three monitoring wells installed at SWMU 8. No other VOCs were detected. All of the detected VOCs were below the NMWQCC Human Health Standards (NMAC 20.6.2.3103). No other SVOCs, TPH (GRO/DRO/ORO), or PCBs were detected.

Fourteen~~Additionally, all~~ TAL metals were detected in the four groundwater samples collected. Manganese exceeded the NMWQCC standard (200 µg/L) (NMAC 20.6.2.3103) in SWMU-08-DP01 and SWMU-08-DP02. Arsenic and beryllium were both detected above their respective USEPA MCLs (USEPA, 2009a), and aluminum was detected above the USEPA Secondary Drinking Water Standard (50 µg/L) (USEPA, 2009a). All other detected metals were below their respective NMWQCC standards and USEPA MCLs~~, and USEPA MCLs~~.

TDS concentrations ranged from 2,600 to 3,190 mg/L. It was hypothesized that these TDS concentrations are artificially low due to the dilution of natural groundwater from leaking water lines. Interviews with the Postal Service Center (Building 232) personnel in 2006 indicated that two sink holes had developed along Connecticut Avenue (east side of Building 232) approximately 6 to 8 months prior to this work being completed (Bhate, ~~2006b~~2006c). The main Base area at HAFB is known to have had a number of leaking underground utilities which can affect local groundwater elevations and redirect the local groundwater flow direction. Groundwater sampling locations and analytical results from the sampling performed by Bhate in 2006 which exceeded current NMWQCC standards or USEPA MCLs are presented on Figure 1-5 of this Work Plan.

~~1.8.6~~1.9.6 Voluntary Corrective Measures at SWMU 8

After the additional site characterization had been completed, NMED provided a letter ~~tentatively~~ conditionally approving the *Draft Voluntary Corrective Measures Work Plan, SWMU 8 Soil Remediation* (Bhate, 2005) once changes had been made and re-submitted. A copy of the conditional approval letter is located in Appendix C-3 of this Work Plan. The *Final Voluntary Corrective Measures Work Plan, SWMU 8 Soil Remediation* (Bhate, 2008) reflected the changes suggested ~~-~~by NMED, and was approved in ~~October~~ December 2008. A copy of the approval letter is located in Appendix C-4. ~~Excavation activities are planned to be conducted by Bhate in late 2008.~~

The primary objective of the VCM was~~is~~ to remove and properly dispose of the remaining PCS between Buildings 231 and 232~~ (see Photograph 1 in Appendix B-5 of this Work Plan)~~. The VCM requires~~s~~ the removal of all PCS (not including soil underneath buildings) at the site through excavation with verification of complete removal via confirmation sampling from the excavation. ~~Contaminated soils will be removed to approximately 10 ft bgs. This depth will ensure complete removal of PCS and account for any potential smear zone (Bhate, 2008). Horizontally, the excavation will be completed based on the TPH levels of greater than 800 mg/kg as determined by soil samples collected subsequent to the excavation and analyzed at an offsite laboratory. The excavation is proposed to be bordered to the northwest by Building 231 and to the southeast by Building 232. The excavation will extend approximately 15 ft to the southwest of the covered walkway wall, and approximately 6 ft to the northeast of the covered walkway (see Figure 5 in Appendix B-5 of this Work Plan).~~

In October 2008, Bhate performed the VCM excavation at SWMU 8. During the implementation of the VCM, the covered walkway which connected Buildings 231 and 232 was removed to allow for soil removal in the area to the west of the Phase I excavation performed by EBASCO in 1995. The approximate area of the VCM excavation was 560 square feet extending to a depth of 8.5 feet bgs. An additional 80 cubic yards of PCS was removed and transported to the permitted HAFB FT-31 Landfarm for treatment. As shown in Figure 1 in Appendix B-5 of this Work Plan, the 2008 VCM excavation extended 25 feet west of the Phase I excavation performed by EBASCO in 1995, overlapped the entire Phase I excavation along with the eastern third of the Phase II excavation performed by FWENC in 1997 and extended deeper than both previous removal actions.

Representative samples of in-place soil were collected during the VCM excavation. A total of 17 sidewall and 4 bottom confirmation soil samples were collected and analyzed for TPH, VOCs, SVOCs, PCBs, and TAL metals. TPH was analyzed for -GRO, -DRO, and -ORO fractions. TPH-GRO detections ranged from 5.3 mg/kg to 12 mg/kg. TPH-DRO detections ranged from 0.55J mg/kg to 2,380 mg/kg. TPH-ORO detections ranged from 2.1J mg/kg to 743 mg/kg. The combined TPH (GRO/DRO/ORO) concentrations exceeded the NMED TPH Screening Guideline for unknown oil (800 mg/kg) (NMED, 2006) in 8 out of 17 excavation sidewall samples. VOC, SVOC, PCB, and TAL metal analytical results from the VCM confirmation soil samples did not exceed the current NMED SSLs (NMED, 2009), or USEPA RSLs (USEPA, 2009b). A summary table of the analytical data for the sidewall and bottom samples collected in 2008 is presented in Table 1 of Appendix B-5. Soil sampling locations and analytical results from the SWMU 8 VCM which exceeded current NMED SSLs, USEPA RSLs, and/or NMED TPH screening guidelines are also presented on Figure 1-6 of this Work Plan.

2 ENVIRONMENTAL SETTING

2.1 Physiography and Topography

HAFB is located within the Sacramento Mountains Physiographic Province on the western edge of the Sacramento Mountains. HAFB is 59,639 acres in area, and is located at a mean elevation of 4,093 feet above mean sea level (amsl). The region is characterized by high tablelands with rolling summit plains; cuesta-formed mountains dipping eastward and of west-facing escarpments with the wide bracketed basin forming the basin and range complex. The Base is located in the Tularosa Sub-basin, which is part of the Central Closed Basins. The bordering mountains rise abruptly to altitudes of 7,000 to 12,000 feet amsl. The San Andres Mountains bound the basin to the west (about 30 miles) with the Sacramento Mountains approximately 10 miles to the east. At its widest point, the basin is about 60 miles east to west and stretches approximately 150 miles north to south.

In the vicinity of HAFB, the ground surface is relatively flat and slopes gently to the southwest. There are localized areas of greater topographic relief related to arroyos present on the Base, as described in Section 2.3 of this Work Plan.

2.2 Climate

As a whole, New Mexico has a mild, arid to semi-arid, continental climate characterized by light precipitation totals; abundant sunshine, relatively low humidity and relatively large annual and diurnal temperature range (Western Regional Climate Center [WRCC], 2003). The climate of the Central Closed Basins varies with elevation. The base is found in the low areas and is characterized by warm temperatures and dry air. Daytime temperatures often exceed 100 degrees Fahrenheit (°F) in the summer months and middle 50s in the winter. A preponderance of clear skies and relatively low humidity permits rapid night time cooling resulting in average diurnal temperature ranges of 25 to 35 °F. Potential evapotranspiration, at 67 inches per year, significantly exceeds annual precipitation, which is usually less than 10 inches. The very low rainfall amounts resulting in the arid conditions, which with the topographically induced wind patterns combining with the sparse vegetation, tend to cause localized “dust devils”. Much of the precipitation falls during the mid-summer monsoonal period (July and August) as brief, yet frequent, intense thunderstorms culminating in 30 – 40% of the total annual rainfall.

2.3 Surface Water and Hydrology

Intermittent streams and arroyos in the basin lowlands are important only during the infrequent periods of heavy rainfall. The Tularosa Basin contains all of the surface flow in its boundaries. The nearest inflow of surface waters to the Base comes from the Lost

River, located in the north-central region of the Base. The Lost River Drainage Basin is the main drainage area within the boundaries of HAFB (Figure 2-1). The upper reaches of the Three Rivers and the Sacramento River are perennial in the basin. HAFB is dissected by several southwest trending arroyos that control the surface drainage. Hay Draw arroyo is located in the far north. Malone and Rita's Draw, which drain into the Lost River and Dillard Draw arroyos, are located along the eastern perimeter of the Base. Approximately 10,000 years ago, indications are of a much wetter climate. The present day Lake Otero encompassed a much larger area, possibly upwards of several hundred square miles. Its remains are the Alkali Flat and Lake Lucero. Lake Lucero is a temporary feature of merely a few inches in depth during the rainy season.

Potable water is available from municipal wells along the margins of the basin with more saline water towards the center. The principal sources of potable water are located in a long narrow north-south trending area on the upslope sides of Tularosa and Alamogordo and in the far southern part of the basin. HAFB is also supplied potable water from Lake Bonito, which is in the Pecos River Basin.

The hydrology of the southern portion of the Base (south of the wastewater treatment plant) is dominated by several manmade features that form a connected hydrologic system. The principal components of this system are: the stormwater drainage canal, Lagoon G, Lake Holloman, and Lake Stinky. In addition, there are both natural and constructed wetlands in this area, some of which are related to and dependent on the manmade surface water features.

HAFB currently generates under 1 million gallons per day (MGD) of wastewater. Approximately 200,000 to 250,000 gallons per day (gpd) of treated effluent empty into Lagoon G (approximately 46 acres) through a 6-inch force-main. This effluent is eventually discharged to the stormwater drainage canal southwest of Lagoon G and north of Highway 70. A berm surrounding this lagoon prevents stormwater from flowing into the lagoon. The stormwater drainage canal starts at a point north of Lagoon G, and then extends southwest of the lagoon into Lake Holloman. The canal is about 2 feet wide and 1 mile long with an elevation change of about 5 feet between Lagoon G and Lake Holloman. The canal also receives effluent from Lagoon G.

Lake Holloman was created in 1965 to receive excess flow from the previous sewage treatment lagoon system. It was formed by the construction of a non-engineered earthen dam midway along an existing ephemeral lake (playa) that normally received runoff from HAFB. Lake Holloman receives water from the stormwater drainage canal, Lagoon G, and effluent from the WWTP. The amount of effluent going to Lake Holloman can be adjusted depending on the water requirements of Lagoon G and the constructed wetlands. The lake is in a state of dynamic equilibrium, rising and falling with seasonal and annual variations in runoff, local shallow groundwater, and treated effluent from the WWTP.

Lake Stinky encompasses as much as 35 acres of playa below Lake Holloman. This area represents a remnant of the original playa grassland present in the project area prior to the construction of the lagoon system for the original wastewater treatment system in 1948. Persistent seepage from Lake Holloman is sufficient to maintain a limited surface water expression in Lake Stinky, as well as a substantial growth of wetland vegetation (tamarisk and saltgrass) at the base of the dam separating Lake Stinky and Lake Holloman. During most years, total annual discharge to Lake Holloman is sufficient to result in overflow to Lake Stinky. On these occasions, Lake Stinky extends south from the dam through culverts underneath U.S. Highway 70/82 to encompass as much as 61 acres.

There are approximately 119 acres of jurisdictional wetlands on the main base (United States Air Force, 1996), the majority of which are located south of the WWTP near Lagoon G and Lake Holloman (79 acres). Some of these areas are fed partly by seepage from artificial impoundments (e.g., north end of Lake Stinky; west and south of Lagoon G). Others may have an independent existence, or be only slightly affected by the impoundments. These latter areas seem to be remnants of the wetlands that existed before the construction of the present system. Many of the wetlands located south of the WWTP are important foraging areas for resident and migrating birds and/or bats.

2.4 Regional Geology

The sedimentary rocks which make up the adjacent mountain ranges are between 500 and 250 million years old. During the period when the area was submerged under the shallow intra-continental sea, the layers of limestone, shale, gypsum, and sandstone were deposited. In time, these layers were pushed upward through various tectonic forces forming a large bulge on the surface. Approximately 10 million years ago the center began to subside resulting in a vertical drop of thousands of feet leaving the edges still standing (the present day Sacramento and San Andres mountain ranges). In the millions of years following, rainfall, snowmelt, and wind eroded the mountain sediments depositing them in the valley (i.e. Tularosa Basin). Water carrying eroded gypsum, limestone, dolomite, gravel, and other alluvial matter continues to flow into the basin with no route of exit.

The Tularosa sub-basin is geologically described as a bolson, which is an extensive flat alluvium-floored depression, into which drainage from the surrounding mountains flows toward a central playa. The overlying alluvium generally consists of unconsolidated gravels (limestone, dolomite, and gypsum), sands, and clays. A fining sequence from the San Andre~~a~~s and Sacramento Ranges towards the basin's center characterizes the area with the near surface soils as alluvial, eolian, and lacustrine deposits. The alluvial fan deposits are laterally discontinuous units of interbedded sand, silt, and clay while the eolian deposits consist primarily of gypsum sands. The eolian and alluvial deposits

are usually indistinguishable due to the reworking of the alluvial sediment by eolian processes. The playa, or lacustrine deposits, consist of silty clay containing gypsum and are contiguous with the alluvial fan and eolian deposits.

Mesozoic rocks in the northwest mark the Colorado Plateau, topped by younger Tertiary strata. Quaternary age sediments have washed off the Southern Rockies into the open basins and the Rio Grande Rift, a failed spreading center or aulacogen. This would-be ocean basin runs up the center of the state with the Rio Grande flowing down its middle, exposing the Paleozoic and Precambrian rocks on its uplifted flanks. Later Cenozoic volcanic intrusions of Quaternary and Tertiary age are also associated with the rifting.

The great Permian Basin of Texas continues into the state from the southeast with younger Quaternary-Tertiary sediments of the Great Plains cover the whole eastern edge. Basin-and-range terrain of Tertiary sediments and volcanics appear in the extreme southwest coupled with wide dry basins choked with Quaternary coarse sediments eroded from the blocks of uplifted older rocks.

2.5 Regional Hydrogeology

The preponderance of the groundwater occurs as an unconfined aquifer in the unconsolidated deposits of the central basin, with the primary source of recharge as rainfall percolation and minor amounts of stream run-off along the western edge of the Sacramento Mountains. Surface water/rainfall migrates downward into the alluvial sediments at the edge of the shallow aquifer near the ranges, and flows downgradient through progressively finer-grained sediments towards the central basin. Because the Tularosa Basin is a closed system, water that enters the area only leaves either through evaporation or percolation. This elevated amount of percolation results in a fairly high water table. Beneath HAFB, the water table ranges from 5 to 50 ft bgs. Flow for the Base is generally towards the southwest with localized influences from the variations in the topography of the Base. The ground surface slopes at a slightly higher rate than the water table such that the depth to groundwater in the northern areas of the Base is comparably greater (25 to 40 ft bgs) than in the southern areas of the Base (less than 10 ft bgs). Near the arroyos, groundwater flows directly toward the surface drainage feature.

Figure 2-~~1~~ 2 shows the general groundwater flow direction at the Base. Groundwater quality in the Tularosa Basin is of potable quality at the recharge areas in close proximity to the Sacramento Mountains and becomes increasingly mineralized (i.e. elevated TDS) toward the central portion of the basin and discharge areas (Radian, 1993). The majority (over 70 %) of the Environmental Restoration Program (ERP) Sites, SWMUs, and Areas of Concern (AOC) located across HAFB have groundwater monitoring wells containing water with an average TDS concentration greater than 10,000 mg/L. This TDS data supports the hypothesis that TDS concentrations below

10,000 mg/L at HAFB are caused by dilution of natural groundwater from leaking water lines and surface irrigation from the domestic water supply. TDS concentrations greater than 10,000 mg/L exceed the NMWQCC limit as potable water (NMAC 20.6.2.3103) and thus, the groundwater beneath HAFB has been designated as unfit for human consumption. Likewise, USEPA guidelines (USEPA, 1986) have identified the groundwater as a Class IIIB water source, characterized by TDS concentrations exceeding 10,000 mg/L (therefore the naturally occurring groundwater at HAFB is not regulated).

In addition, there are no potable water wells on HAFB. Potable water for the Base (Boles, Douglas and San Andres well fields) and the city of Alamogordo is derived from the foot of the nearby Sacramento Mountains, just south of Alamogordo. According to the groundwater well inventory (Table 2-1) prepared by the New Mexico Office of the State Engineer, there are 25 domestic, 15 commercial, 7 irrigation, and 3 livestock wells located within a 4 mile radius of HAFB (New Mexico Water Rights Reporting System [NMWRRS] database, 2009). As shown on Figure 2-3, these wells are located along HAFB's northern and eastern boundaries (upgradient and crossgradient respectively). ~~The only production water well, used for livestock irrigation, is located approximately 7 miles southwest of HAFB.~~

2.6 Soils

Two soil types have been identified on the installation. The main soil type is the Holloman-Gypsum land-Yesum complex, 0 to 5 percent slopes. The other soil type is Mead silty clay loam, 0 to 1 percent slopes. This soil type is located only across the main drainage area (Lost River Drainage Basin) for the installation. The distribution of soil types in the vicinity of HAFB is depicted on Figure 2-4 (United States Department of Agriculture [USDA], 1981).

The Holloman-Gypsum land-Yesum complex, 0 to 5 percent slopes soil consists of large areas of shallow and deep, well drained soils and areas of exposed gypsum. The Holloman soil makes up about 35 percent of the complex. Typically, the surface layer is light brown very fine sandy loam about 3 inches thick. The upper 13 inches of the substratum is pink very fine sandy loam that is very high in gypsum. Below that, the substratum is white gypsum to a depth of more than 60 inches. This soil is calcareous and mildly alkaline to moderately alkaline throughout. Permeability is moderate, and available water capacity is very low.

Gypsum land makes up about 30 percent of the Holloman-Gypsum land-Yesum complex, 0 to 5 percent slopes. Typically, less than 1 inch of very fine sandy loam overlies soft to hard, white gypsum. The deep Yesum very fine sandy loam makes up about 20 percent of the complex. Typically, the surface layer is light brown very fine sandy loam about 3 inches thick. The upper 9 inches of the substratum is light brown

fine sandy loam that is very high in gypsum. Below that, the substratum is pink very fine sandy loam to a depth of more than 60 inches. The soil is calcareous throughout and is mildly alkaline. Permeability is moderate, and available water capacity is moderate. Many fine gypsum crystals are found throughout the profile.

The soil type located across the main drainage area for the installation is Mead silty clay loam, 0 to 1 percent slopes. This deep, poorly drained, nearly level soil is on outer fringes of alluvial fans. This soil formed in fine textured alluvium over lacustrine lake sediment. It is very high in salt content because of periodic flooding and poor drainage. Slopes are smooth and concave. Typically, the surface layer is reddish brown silty clay loam and clay loam about 5 inches thick. The substratum, to a depth of 48 inches, is light reddish brown clay that has a high content of salts. Below that, the substratum is lacustrine material of variable texture and color to a depth of more than 60 inches. Included with this soil are areas of Holloman soils and Gypsum land along the margins of the unit of steep, short gully sides and knolls. These inclusions make up about 15 percent of the map unit for this soil type. Individual areas are generally smaller than 10 acres. This soil is moderately calcareous throughout and is moderately to strongly alkaline. It has a layer of salt that is more soluble than gypsum. Permeability is very slow, and available water capacity is low.

2.7 Site-Specific Setting

SWMU 8 has relatively flat ground surface covered with gravel, concrete sidewalks, and asphalt parking lots. Top-of-casing elevations were re-surveyed and depth to groundwater measurements were collected in September of 2009 at the three existing monitoring wells at SWMU 8, along with one well from upgradient ERP Site SS-18 (SS18-MW21) in order to develop a current potentiometric surface map of the site. Table 2-2 presents the groundwater elevation data collected in September 2009. ~~The covered walkway which connects Buildings 231 and 232 extends over some of the remaining PCS.~~ Depth to groundwater at SWMU 8 is approximately 5.25~~3.5~~ to 6.5~~4.5~~ ft bgs (5.10 to 6.36 ft below top of casing). As shown ~~i~~on Figure 2-5, groundwater ~~and~~ flows to the south~~west~~-southwest with onsite potentiometric surface elevations ranging from 4,067.583~~,072.483~~ to 4,067.297~~,071.852~~ ft amsl and having a hydraulic gradient of approximately 0.003~~13~~ ft/ft ~~(Bhate, 2006b)~~.

~~Previous groundwater sampling showing low TDS values in groundwater at SWMU 8 indicate influence on groundwater depth and flow direction from leaking underground water supply pipes in the vicinity of Building 232. The main base area at HAFB is known to have had a number of leaking underground water supply lines, which have locally redirected groundwater flow direction.~~

~~Depth to groundwater in the three onsite monitoring wells were gauged by Bhate in July 2006. Groundwater depths were as follows:~~

- ~~SWMU-8-DP01 = 2.46 ft bgs~~
- ~~SWMU-8-DP02 = 4.19 ft bgs~~
- ~~SWMU-8-DP03 = 3.40 ft bgs~~

~~Groundwater elevations measured in 2006 indicated groundwater flow direction to the west-southwest (see Figure 2 in Appendix B-4 of this Work Plan) which is consistent with the general trend of groundwater flow at HAFB. Groundwater elevations and top of casing elevations (ft amsl) for SWMU-8 monitoring wells are summarized in Table 1 of Appendix B-4 of this Work Plan.~~

~~Depth to groundwater in the three onsite monitoring wells were measured again in September 2008 by Bhate. Groundwater depths were as follows:~~

- ~~SWMU-8-DP01 = 3.36 ft bgs~~
- ~~SWMU-8-DP02 = 5.28 ft bgs~~
- ~~SWMU-8-DP03 = 5.03 ft bgs~~

~~Depth to groundwater had increased significantly between July 2006 and September 2008. SWMU-8-DP01 still had the shallowest depth to groundwater of the three wells. The September 2008 groundwater elevations indicated groundwater flow direction to the northwest, versus the historic groundwater flow direction at HAFB, to the southwest. Although the affects of groundwater mounding in the area due to leaking underground water supply lines have diminished in wells SWMU-8-DP02 and SWMU-8-DP03, the affects have not diminished in SWMU-8-DP01 due to its location adjacent to the leaking water line on Connecticut Avenue.~~

Based on previous investigations conducted at SWMU 8, site specific geology consists of slightly moist clayey silts with varying amounts of medium to fine sand and caliche to depths ranging from 4 to 5 ft bgs. These soils display little to no plasticity and weak cementation of the caliche fraction. Generally, soils beneath 5 ft are characterized as silty medium to fine sands and sandy silts with occasional layers demonstrating higher percentages of clay content. Soils tend to be moist to saturated below the water table.

~~This page intentionally left blank.~~

3 SOURCE CHARACTERIZATION

3.1 Physical Condition of the Oil/Water Separator

The former Building 231 Oil/Water Separator (SWMU 8) was located on the south side of Building 231 (Figure 1-3). The OWS at SWMU 8 was abandoned and filled with sand prior to its removal (FWENC, 1997), had a capacity of 300 gallons, and was approximately 6 ft long by 4 ft wide, and 4 ft deep (A.T. Kearney, 1988). No information is available pertaining to a date when the OWS at Building 231 was installed. The OWS was removed on August 8, 1995, along with approximately 21 cubic yards of surrounding PCS (EBASCO, 1995).

3.2 Waste Characteristics

The OWS at Building 231 received rinsate containing water, oils, detergents, and fuels from a heavy equipment washrack adjacent to the unit (EBASCO, 1995). Historical site characterization and remedial activities have shown that TPH has been released into the soil surrounding the OWS in the past. The subsurface soil sampling results indicate that the extent of soil contamination (not underneath Buildings 231 and 232) has been defined (Bhate, ~~2006b~~2006c). No evidence of TPH has been detected in groundwater samples previously collected at SWMU 8.

This page intentionally left blank.

4 POTENTIAL RECEPTORS

This section identifies and describes potential receptors (human and biological) and environmental systems that ~~are~~ have been found within the entire HAFB installation boundary (approximately 60,000 acres) as well as the potential human receptors at SWMU 8.~~susceptible to contaminant exposure associated with the potential releases of hazardous materials from SWMU 8. The potential receptors include HAFB personnel and residents as well as the flora and fauna of the surrounding ecosystem.~~

4.1 Current Local Uses and Planned Future Uses of Groundwater

There are no potable water wells on HAFB. Potable water for the Base and the City of Alamogordo is derived from the nearby Sacramento Mountains. According to the groundwater well inventory (Table 2-1 and Figure 2-3) prepared by the New Mexico Office of the State Engineer, there are 25 domestic, 15 commercial, 7 irrigation, and 3 livestock wells located within a 4-mile radius of HAFB (NMWRRS database, 2009).~~The only production water well, used for livestock irrigation, is located approximately 7 miles southwest of HAFB.~~

There are no water supply wells on the Base because the preponderance of groundwater beneath HAFB contains water with an average TDS concentration greater than 10,000 mg/L which exceeds the NMWQCC limit (NMAC, 20.6.2.3103) as potable water and thus, the groundwater beneath HAFB has been designated as unfit for human consumption. Likewise, USEPA guidelines (USEPA, 1986) have identified the groundwater as a Class IIIB water source, characterized by TDS concentrations exceeding 10,000 mg/L.

4.2 Current Local Uses and Planned Future Uses of Surface Waters Directly Impacted by the Facility

Due to low rainfall and high evaporation, surface water at HAFB is limited and, therefore, is not used for domestic or municipal purposes nor is it used for recreation or agriculture. The ponds in the southern part of the Base receive effluent from the National Pollution Discharge Elimination System (NPDES) permitted WWTP and are saline (normally about half the salinity of seawater), sulfate-rich, and very rich in nutrients. These ponds provide habitat for numerous plant and wildlife species, so water quality of these receiving waters is important.

4.3 Potential Human Receptors

Potential human receptors at SWMU 8 include residents, military and civilian workers, construction and maintenance workers, vendors and service providers, and transient visitors. Human use facilities primarily consist of residential housing and industrial/operational facilities. The Base also has a hospital and three schools and a variety of other public service facilities. While groundwater is not locally extracted for use, human exposure to pollutants may result from dermal contact or ingestion from physical contact with contaminated soils or groundwater.

4.4 Potential Biological Receptors

Potential receptors include the flora and fauna of the surrounding HAFB ecosystem, as described in the following subsections. SWMU 8 is located in an area of HAFB that is classified as industrial. Additionally, there are no ecological habitats that are located in or adjacent to this SWMU. The NMED has developed a tiered procedure for the evaluation of ecological risk (*Guidance for Assessing Ecological Risk Posed by Chemicals* [GAERPC]: *Screening-Level Ecological Risk Assessment*, NMED 2008). The Scoping Assessment, which includes a Site Assessment Checklist, is the first phase of the process as defined in the GAERPC. SWMU 8 is located within the main base at HAFB that is classified as industrial. As per the Site Assessment Checklist, there are no habitats (wetlands, aquatic, terrestrial, wooded, shrub, grassland, and/or desert) that are in or adjacent to the site. Therefore, an ecological risk assessment is not warranted for SWMU 8. ~~This~~ The following information regarding the biota present on the HAFB installation was generated in 2005 by Bhate during development of the Environmental Assessment (EA) (Bhate, 2006a) for the wastewater utility privatization evaluation.

4.4.1 Flora

HAFB flora is dominated by xerophytic shrubland and grassland communities having plant assemblages biogeographically related to the Great Basin and Chihuahuan Desert. Other plant communities on the installation include those that are located in brackish marshes and riparian and/or wetland areas, such as those south of the WWTP. Field investigations and vegetation surveys have identified the plant species that are listed in Table 4-1 of this Work Plan.

4.4.2 Fauna

A wide variety of fauna can be found at HAFB as it provides a relatively diverse range of habitats for both aquatic and terrestrial species. Habitats found on the installation provide ideal environments for a variety of reptiles and amphibians, mammals, and birds. Available habitats include upland grasslands, xerophytic shrublands, brackish marshlands, playas, and surface water habitats. Additionally, the area south of the

WWTP also offers a relatively extensive amount of shoreline/edge habitat along Lakes Holloman and Stinky, the stormwater drainage canal, Lagoon G, and associated constructed wetlands.

Previously performed wildlife inventories have identified numerous species of wildlife throughout the installation. Major groups of fauna are discussed below.

4.4.2.1 Invertebrates

Though invertebrates are an important feature of the desert ecosystem, little is known about their diversity in arid lands. Invertebrates play important roles as beneficial pollinators, parasites, predators, detritivores, and as prey for small mammals, reptiles, fish, and birds. To date, there have been no base-wide studies at HAFB to determine invertebrate species diversity.

However, studies on reptiles, birds, and mosquitofish (*Gambusia affinis*) habitat suggest that the roles taken by invertebrates contribute to ecosystem function. For example, it has been found that the animals on the installation consume insects such as grasshoppers (*Orthoptera*), butterflies and moths (*Lepidoptera*), beetles (*Coleoptera and Bledius*), adult chironomids (*Diptera*), and corixids (aquatic *Hemiptera*).

A total of 26 different aquatic invertebrate taxa have been identified in the area south of the WWTP (Freehling, et al., 1999) and certain fish populations located in Lost River and Malone Draw feed on mosquitoes, amphipods, and annelid worms (Suminski, 1977; Turner, 1987). Some of the invertebrate species that have been identified on the installation include harvester ants (*Pogonomyrmex* spp.), honeypot ants (*Myrmecocystus*), and grasshoppers (*Orthoptera*).

4.4.2.2 Reptiles and Amphibians

Two herpetofauna species surveys have been performed at HAFB: (1) along roads for the Texas horned lizard (*Phrynosoma cornutum*) (Mehlhop, et al., 1998), and (2) at the cinetheodolite missile towers (Johnson, et al., 1997a). The Texas horned lizard survey was conducted on the Main Base and the Boles Wells Water System Annex. The Texas horned lizard, formerly a Category 2 species for federal listing as endangered or threatened, was reclassified February 28, 1996, as a species of concern (United States Department of Interior, 1996). This lizard appears to be abundant on HAFB (Mehlhop, et al., 1998) and was found within the major plant community types on both the Main Base and Boles Wells Water System Annex. Other reptiles found during these surveys are listed in Table 4-2 of this Work Plan.

Other reptiles and/or amphibians that may occur at HAFB that are not listed above include rat snakes (*Elaphe* spp.), rattlesnakes (*C. molossus*), and the greater earless lizard (*Cophosaurus texanus*).

4.4.2.3 Mammals

The most common mammals at HAFB consist of various rodent species and the black-tailed jackrabbit (*Lepus californicus*), found throughout the Great Basin Desert Shrub habitats in New Mexico (Frey and Yates, 1996). Numerous small colonies of bats that forage for insects at the numerous playas, wetlands, and riparian habitats (Johnson et al., 1997a) can be found on the installation. Bats on HAFB roost in abandoned and inhabited buildings and culverts. Table 4-3 lists some of the bat species that have been observed at HAFB.

Fourteen species of rodents have been identified on the dune periphery of the installation. Table 4-4 lists these rodent species. The Ord's Kangaroo Rat (*Dipodomys ordii*), Desert Pocket Mouse (*Chaetodipus penicillatus*), and the Plains Pocket Mouse with the lighter pelage (*Perognathus flavescens gypsi*) were found primarily within the dunes; others were found equally distributed or too few were captured to determine the habitat affinity (Root and Demarais, 1997; Johnson et al., 1997a; Johnson, et al., 1997b).

At least five mammalian species that have been or could be observed on HAFB have been introduced by man. These five species include the house mouse (*Mus musculus*), Norway rat (*Rattus norvegicus*), horse (*Equus caballus*), barbary sheep (*Ammotragus lervia*), and gemsbok (*Oryx gazella*). The latter two species were introduced by the New Mexico Department of Game and Fish in the late 1960s. Native big game mammals are uncommon in the project area and include mule deer (*Odocoileus hemionus*) and pronghorn (*Antilocapra americana*). Predators include bobcat (*Lynx rufus*), gray fox (*Urocyon cinereoargenteus*), and coyote (*Canis latrans*). Badger (*Taxidea taxus*) and striped skunk (*Mephitis mephitis*) are uncommon predators and omnivores, respectively.

4.4.2.4 Birds

The complex of constructed wetlands south of the WWTP provides important habitat for a number of bird species. Bird censuses are ongoing at HAFB and a complete list of birds can be found in the HAFB Integrated Natural Resource Management Plan (INRMP) (USACE, 2001). The HAFB INRMP further details the relationship between habitat at HAFB and the bird species found there. Table 4-5 lists some of the previously observed bird species at HAFB.

4.5 Endangered or Threatened Species

4.5.1 Endangered Species

Although not noted as being observed at HAFB, the Aplomado falcon (*Falco femoralis)* is known to be present in the HAFB area. The Aplomado falcon ranges from northern Mexico (and very rarely into southern Texas and New Mexico) southward to the

southern tip of South America. In this huge range the species may be common or very rare depending upon habitat and location. This species sometimes hunts over grassland fires and feeds on small birds and/or insects fleeing the flames.

While still legally protected from hunting, the Aplomado falcon is not protected by Endangered Species Act requirements to preserve habitat and the like. It is believed that mainly habitat destruction caused the species' (near-)disappearance from the U.S. and hinders reestablishment of a wild breeding population; thus, a coalition of environmental groups is attempting to have full protection restored so as not to jeopardize the success of the expanding wild population and the reintroduction efforts (Associated Press, 2006).

4.5.2 Threatened Species

4.5.2.1 Burrowing Owl

~~TAlthough not noted as being observed at HAFB, t~~he burrowing owl (*Athene cunicularia*; formerly *Speotyto cunicularia)* is known to be present in the HAFB area. The burrowing owl is a grassland bird historically found in vast numbers across the prairies of the western Great Plains. While the formal environmental status of the burrowing owl varies based on geography, there is an overall decline of this species, particularly where burrowing owls are strongly associated with prairie dog towns. They are listed as endangered, threatened, or a species of special concern in most states and provinces where they occur. The primary threats across its North American range are habitat loss and fragmentation due to the incursion of agriculture and urban encroachment, suppression of naturally occurring fire, and habitat degradation from the extermination of small mammals like prairie dogs and squirrels. Increases in predators such as foxes, badgers, and coyotes are also taking a toll (The Nature Conservancy, 2007; The Owl Pages, 2005).

4.5.2.2 White Sands Pupfish

The White Sands Pupfish (*Cyprinodon tularosa*) is endemic to the Tularosa Basin of New Mexico and is considered a Species of Concern by the U.S. Fish and Wildlife Service (USFWS) and a Threatened Species by the New Mexico Department of Game and Fish (NMDGF) (NMAC 19.33.6). Currently White Sands Pupfish populations occur in four detached habitats within the Tularosa Basin, one of which is the Lost River Basin on HAFB. Although not native to the Lost River Basin (population transplanted there in 1970), the White Sands Pupfish essential habitat is protected within the Basin due to the species' extremely limited remaining distribution. Threats to the White Sands Pupfish include introduction of nonnative fishes, dewatering, chemical contamination of aquatic habitats, and habitat degradation caused by feral horses and off-road vehicle use (Pittenger and Springer, 1999).

This page intentionally left blank.

5 INITIAL CONCEPTUAL SITE MODEL

5.1 Initial CSM Development

The initial CSM was developed in the planning and objectives phase of the project, as described in Section 1.2 of this Work Plan. The CSM is an important communication tool for regulators, responsible parties, and stakeholders and can provide a framework for the entire project. The CSM was formulated with the goal of focusing on collecting the best data to support risk based decision making, and to fill any significant data gaps that exist in relation to SWMU 8. Release mechanisms along with fate and transport of contaminants are also addressed, as they are both important in supporting risk management.

5.2 Initial CSM Summary Description

SWMU 8 is a former oil/water separator which is known to have had a past release. PCS which does not lie underneath either Building 231 or 232 has been defined and ~~up to 90 percent of it has been~~ removed. Three separate PCS remedial (removal) actions (excavations) conducted by EBASCO Services (1995), FWENC (1997), and Bhate (2008) have removed approximately 133 cubic yards of PCS from the site. ~~(FWENC, 1997). The remaining known PCS onsite lies beneath the covered walkway which connects Building 231 and 232, and approximately 6 feet north of the covered walkway, in the vicinity of soil sample SWMU-8-05-7 collected during the Phase I excavation (EBASCO, 1995).~~ Groundwater contamination ~~at~~ related to a release from SWMU 8 has not been detected in the three SWMU 8 monitoring wells. ~~One~~ Data gaps~~pathway~~ which have~~s~~ yet to be assessed at SWMU 8 include~~s~~ the extent of soil and groundwater contamination which exists beneath Buildings 231 and 232~~soil-vapor migration, or vapor intrusion into indoor air~~. The goal of this Work Plan is to close the data gaps which currently exist in regards to soil and groundwater contamination below Buildings 231 and 232~~, and to assess residual sub-slab vapor concentrations in these buildings from soil contamination~~. ~~Along with sub-slab soil-vapor sampling, indoor air sampling will be performed within Buildings 231 and 232 to close the indoor air quality data gap which now exists.~~ At SWMU 8 several historical investigations and remedial actions have been performed and are summarized in Section 1.9~~8~~ of this Work Plan.

The chemicals or constituents of concern (COCs) released from SWMU 8 which have~~s~~ been ~~documented~~ detected above action levels in soil are~~is~~ TPH. Based on the SWMU 8 VCM analytical soil data, the combined TPH (GRO/DRO/ORO) concentrations exceeded the NMED TPH Screening Guideline for unknown oil (800 mg/kg) (NMED, 2006) in 8 out of 17 excavation sidewall samples (see Table 1 and Figure 1 in Appendix B-5 of this Work Plan). Onsite concentrations of VOCs, SVOCs, and PCBs have never been detected in concentrations exceeding current soil and groundwater action levels.

The release mechanisms from the oil/water separator could have been through broken/cracked feeder pipes, corroded pipes, defective joints/connections, spills, or from an actual leak from the separator itself. The nature of the subsequent transport and fate of each chemical of potential concern~~the~~ (COPC) is dependent on environmental conditions such as depth to groundwater, hydraulic gradient, and the nature of the contaminant(s). ~~Groundwater at SWMU 8 has been artificially elevated due to leaking underground water lines in the vicinity of the site.~~ Depth to groundwater onsite is approximately 5.25 to 6.5 ft bgs and groundwater flow direction is to the south-southwest. The hydraulic gradient at SWMU 8 is approximately 0.~~013~~ 003 ft/ft ~~(Bhate, 2006b)~~. Although groundwater contamination related to a release from SWMU 8 has not been detected in the three onsite monitoring wells, additional wells are planned to ensure the horizontal delineation of groundwater is complete. These additional wells will also define groundwater conditions beneath Buildings 231 and 232.

The most significant COPCs in terms of likely mass are VOCs and SVOCs. Although the hydraulic gradient at this site is very flat, some COPCs can travel much more readily than others. VOCs are likely to be the most mobile COPCs and may travel further than other classes of COPCs. Metals, SVOCs, POLs, and oil and grease have a low degree of mobility in the subsurface. The presence of these classes of COPCs is likely to be limited to the soils and groundwater in the immediate vicinity of the leak. The leaked COPCs from SWMU 8 have not reached groundwater based on previous analyses from the three onsite wells.

A release from this site occurs in the context of its location in the Tularosa sub-basin, which is geologically described as a bolson (an extensive, flat, alluvium-floored depression) into which drainage from the surrounding mountains flows toward a central playa. Water carrying eroded gypsum, limestone, dolomite, gravel, and other alluvial matter continues to flow into the basin with no route of exit.

Unconsolidated deposits in the basin include alluvium generally consisting of gravels (limestone, dolomite, and gypsum), sands, and clays. At the base, the area is characterized by near-surface soils of alluvial, eolian, and lacustrine origin. The alluvial fan deposits are laterally discontinuous units of interbedded sand, silt, and clay while the eolian deposits consist primarily of gypsum sands. The eolian and alluvial deposits are usually indistinguishable due to the reworking of the alluvial sediment by eolian processes. The playa, or lacustrine deposits, consist of silty clay containing gypsum and are contiguous with the alluvial fan and eolian deposits.

Potential evapotranspiration, at 67 inches per year, significantly exceeds annual precipitation, which is usually less than 10 inches per year. Much of the precipitation falls during the mid-summer monsoonal period (July and August) as brief, yet frequent, intense thunderstorms accounting for 30–40% of the total annual rainfall.

The result is that the surficial deposits are a hydrogeologic feature characterized by relatively low hydraulic conductivities (e.g., less than 10^{-4} centimeters per second [cm/sec]) in which the groundwater is non-potable due to high concentrations of TDS. The low recharge, low permeability (and hence yield), and high TDS combine to negate the utility of the groundwater for potable or other purposes.

Potable water at HAFB is supplied by municipal wells along the margins of the basin where the water has lower TDS and the permeability is higher. These locations are hydraulically upgradient of the Base. The more saline waters (high TDS) at the Base result from long travel paths or residence times of the water in contact with the gypsum and other soluble geological materials. Small zones of fresh water (with lower TDS) may occur in areas where leakage from water supply lines and the sewer line occur. Potable water is also provided by Bonita Lake, which is located approximately 60 miles northeast of the Base.

The CSM described in the previous paragraphs summarizes a generalized rendering of the Site; examples of key Site features; local geology/hydrogeology; and contaminant type, pathways, and distributions. This section has presented a synopsis of the current conceptual understanding of the Site, decision information requirements, status of information gathering, and actions required to obtain information. This information was used to create the DQOs outlined in Section 1.3 of this Work Plan. It is important to re-emphasize that the Initial CSM provides an informed hypothesis or set of hypotheses about the Site, thus, actual conditions at the Site may vary from those depicted in this section.

This page intentionally left blank.

6 SAMPLING AND ANALYSIS PLAN FOR CHARACTERIZATION OF RELEASES OF HAZA~~T~~RDOUS WASTE

This section presents the SAP for the SWMU 8 RFI, including:

- Pre-Investigation Requirements
- Sampling Strategy
- Sampling Procedures
- Sample Analysis

The SAP for this Work Plan has ~~five~~ four primary objectives. The first objective is to collect soil samples from below Buildings 231 and 232 to determine the nature and extent of soil contamination below these structures. ~~The second objective is to perform soil-vapor sampling below Building 231 and 232, and indoor air sampling within these buildings, to assess the potential for migration of hydrocarbons into indoor air from the soil below.~~ The second~~third~~ objective is to install additional monitoring wells to determine the nature and extent of groundwater contamination underneath Buildings 231 and 232. The third~~fourth~~ goal of this RFI is to collect sufficient analytical and geotechnical data to support a site-specific risk assessment of the exposure pathways present for both human and non-human receptors. The fourth~~fifth~~, and final, objective of the SAP for this RFI is to collect the proper data to meet the DQOs to support closure of the site based on guidance from the NMED.

Soil~~, soil-vapor, indoor air,~~ and groundwater sampling procedures will utilize USEPA SW-846 ~~industry~~ standard methods to ensure sample quality and provide a platform for efficient collection. Sample analysis will include screening and definitive data to provide an efficient means of identifying subsurface conditions. The screening data will be generated in the field using field instruments. The definitive data generated by a National Environmental Laboratory Accreditation Program (NELAP) certified~~the~~ laboratory will be presented with limited data deliverables (i.e. Level II data packages), using a standard turn-around-time for the soil~~, soil-vapor, indoor air,~~ and groundwater samples collected during the investigation.

6.1 Pre-Investigation Requirements

Before site activities can begin, there are several pre-investigation documents and approval requirements to be met, including Air Force Form (AF Fm) 332 approval, Base dig permit with utility clearances, site security measures, and facility manager notification of the intended operations. NationView will coordinate project requests for Base installation support services through the 49th Civil Engineering Squadron/Civil Engineering Asset Management Flight (CES/CEA). Pertinent to the start of activities, a

pre-construction meeting and site walk-through will be conducted with the USACE Representative, HAFB personnel, and NationView Site Manager, to inspect site conditions for site/equipment access, equipment staging, and decontamination area(s), potential site hazards, and emergency evacuation routes. Also reviewed at this time will be project procedures in accordance with the schedule and planned activities.

6.1.1 AF Form 332

Prior to initiating drilling activities a completed and approved AF Fm 332, will be obtained. This form authorizes construction work at HAFB and is required for the initiation of any construction work. This work order describes what activities will take place at the location.

6.1.2 Dig Permit/Utility Clearances

Prior to the submittal of the dig permit (AF Fm 103), the area of excavation will be clearly delineated with marker flags, stakes, or paint, as appropriate to the surface material. Utility clearance approvals will be completed by the appropriate HAFB utility office (e.g., telephone, sewer, water, natural gas etc.). Upon receipt of the approved dig permit (AF Form 103) with the utility clearances, the NationView Site Manager or other authorized project personnel will complete a site walk-through confirming the dig permit authorizations and make any required changes.

6.1.3 Site Security

Site security is concerned with safety at the site during all drilling activities, and areas surrounding the drilling activity, and will be addressed as outlined in the *Basewide Health and Safety Plan* (HASP) (Bhate, 2003b). At a minimum, the exclusion zone will be secured with caution tape and traffic cones surrounding the perimeter of the site. The size of the exclusion zone will be determined by the size of the drilling and support equipment, and the prevailing site conditions. Open boreholes will not be left unattended without first securing the immediate area surrounding the borehole, and covering the opening so that it does not become a hazard.

6.2 Sampling Strategy

6.2.1 Sampling Objectives

As presented in Section 1.2 of this Work Plan, the primary project objectives of the SWMU 8 RFI sampling plan are to:

- Collect soil samples from below Building 231 and Building 232 to determine nature and extent of soil contamination beneath these structures,

- ~~Perform soil-vapor sampling below Building 231 and Building 232, and indoor air sampling within these buildings, to assess the potential for migration of hydrocarbons into indoor air from the soil,~~

- Install additional monitoring wells determine the nature and extent of groundwater contamination beneath Buildings 231 and 232,

- Collect sufficient analytical and geotechnical data to complete a site-specific risk assessment of the exposure pathways, and,

- Collect the proper data to meet the DQOs to support closure of the site based on guidance from the NMED.

The sampling strategy for this RFI has been designed to characterize SWMU 8 soil~~, soil-vapor, indoor air,~~ and groundwater conditions underneath adjacent structures and to collect data in support of risk assessment modeling. Pre-designated sampling locations, quantities, and location rationale are presented in Section 6.2.2~~2~~ of this Work Plan.

As described in Section 6.3~~3~~ of this Work Plan, DPT drilling techniques will be used to collect samples during this work, as follows:

- Soil samples will be collected via DPT using Geoprobe Systems® Dual-Tube tooling (Building 231) and Geoprobe Systems® Macro-Core® tooling (Building 232).

- ~~Soil-vapor samples will be collected using Summa® canisters and sub-slab soil vapor implants installed via a hand-held rotary-hammer and constructed of ¼ inch Teflon® tubing and Swagelok® stainless steel caps and connectors.~~

- ~~Indoor air samples will be collected using Summa® canisters and 24-hour flow controllers in order to obtain composite samples over the course of one day.~~

- Groundwater samples will be collected from permanent 1-inch PVC pre-pack well screen (Building 231) and standard 1-inch PVC well screen (Building 232) installed via DPT.

~~6.2.1Applicable or Relevant and Appropriate Requirements~~

~~The detected analytical results for the subsurface soil samples collected during this RFI will be compared to their respective Applicable or Relevant and Appropriate Requirement (ARAR) action level. The specific action levels to be used include the following:~~

~~6.2.1.1Soil~~

~~The residential SSLs established in NMED's Technical Background Document for Development of Soil Screening Levels (NMED, 2006a) will be used as the action levels for VOCs, SVOCs, PCBs, and TAL metals. The action levels for TPH are established in the New Mexico Environment Department TPH Screening Guidelines (NMED, 2006b). The TPH screening guideline for an unknown oil of 800 mg/kg will be used as the action level for total TPH concentrations (GRO, DRO, and ORO) during this investigation.~~

~~6.2.1.2Air~~

~~Air sampling for this investigation will consist of indoor air and soil-vapor sampling.~~

~~Indoor Air~~

~~Indoor air data will be compared with the residential allowable indoor inhalation levels included in the New Mexico *Underground Storage Tank Bureau Guidelines for Corrective Action* (NMED, 2000). Risk-based screening levels (RBSLs) established in this document will be used as the action levels for VOCs posing an inhalation hazard in Buildings 231 and 232.~~

~~Soil-Vapor~~

~~Soil-vapor data will be compared with the residential allowable indoor inhalation levels included in the New Mexico *Underground Storage Tank Bureau Guidelines for Corrective Action* (NMED, 2000). Note that the allowable indoor inhalation levels are the allowable concentrations in the breathing zone, not for sub-slab soil-vapor. Soil-vapor concentrations will reduce as vapors migrate indoors and mix with the air in the enclosed space, resulting in significantly lower indoor air concentrations in comparison to soil-vapor.~~

~~6.2.1.3A shallow soil-vapor to indoor air attenuation factor of 0.01 will be used for comparing sub-slab soil-vapor samples to the NMED guidelines mentioned above for indoor air. The attenuation factor of 0.01 states that the indoor air concentration would not be expected to exceed 1/10th of the concentration immediately below the foundation (USEPA, 2002). Based on this attenuation factor, allowable sub-slab values will be calculated by multiplying the NMED allowable indoor air level by a factor of 10 (i.e. the benzene RBSL of 2.66 micrograms per cubic meter [µg/m^3] [NMED, 2000] would be 26.6 µg/m^3 with the attenuation factor). Groundwater~~

~~There are two potentially applicable standards for groundwater: the NMWQCC groundwater standards for contaminants (20.6.2.3103 NMAC) and the USEPAs~~

~~National Priority Drinking Water Standards or Maximum Contaminant Levels (MCLs) (USEPA, 1995). The lower of the two standards will be used as action levels for VOCs, SVOCs, PCBs, and TAL Metals in groundwater. The NMED TPH screening guideline for diesel #2/crankcase oil in non-potable groundwater of 30.4 mg/L will be used as the action level for total TPH concentrations (GRO, DRO, and ORO) in groundwater (Table 2b, NMED, 2006b).~~

6.2.2 Field Sampling Location Plan Design Basis

A design basis was used to develop the RFI field sampling location plan. Locations for the proposed soil borings~~, soil-vapor implants, indoor air sampling,~~ and permanent wells are illustrated on Figures 6-1 and 6-2~~, 6-2, 6-3, and 6-4~~ respectively. The design basis was used to provide a consistent rationale for pre-designating sampling locations in the vicinity of SWMU 8. Research efforts were made to maximize the value of historical information in identifying prior site activity at this SWMU. Benefits of this historical information include soil conditions, COPCs, groundwater depth, and groundwater flow direction.

~~The main Base area at HAFB is known to have a number of leaking underground utilities which can affect local groundwater elevations and flow direction. Groundwater depth and flow direction at SWMU 8 have been influenced by leaking underground water lines in the vicinity of Connecticut Avenue and Second Street. Artificially low TDS concentrations observed in groundwater samples indicate dilution of natural groundwater from leaking water lines in the area. Interviews with the Postal Service Center (Building 232) personnel indicated that two sink holes had developed along Connecticut Avenue (east side of Building 232) approximately 6 to 8 months prior to the Additional Characterization work being completed (Bhate, 2006b). The influence of leaking water lines on groundwater depth and flow direction in the vicinity of SWMU 8 was considered when formulating the groundwater sampling plan.~~

Soil sampling inside Building 231 will be performed with a Geoprobe Systems® 66 Series Track Mounted DPT rig. Building 231 is an Auto Hobby Center, with large bay doors and plenty of room for a track mounted drill rig to maneuver. Soil sampling inside Building 232 will be performed with a Limited Access Dolly Mounted Geoprobe®. Building 232 is a Postal Service Center which has an office type floor-plan, requiring the limited access dolly-mounted probe. Sampling locations may be moved on an as needed basis due to the presence of underground utilities, overhead obstructions, or immovable objects within Buildings 231 and 232. Sampling locations may also be adjusted in the field based on the presence (or absence) of visual, olfactory, or elevated PID headspace evidence indicating petroleum contamination, or lack thereof, in soil from adjacent boreholes.

Soil lithology in the area of SWMU 8 generally consists of silty to clayey sands with an interbedded weak caliche fraction, which lends itself to the utilization of DPT~~DTP~~ drilling techniques. Soil~~-vapor~~ sampling locations will be spaced in both buildings to characterize any potential soil contamination due to a release from the former Building 231 OWS.~~vapor intrusion risk.~~ Soil sampling activities within both Building 231 and 232 will begin nearest the source area and radiate outwards to delineate extent of potential soil contamination beneath each building. The main COPC which could be present in groundwater at SWMU 8 is TPH (GRO/DRO/ORO). Groundwater depth based on previous drilling and excavation activity at SWMU 8 is approximately 5.25~~3.5~~ to 6~~4~~.5 ft bgs. General groundwater flow direction in the main base area of HAFB is to the southwest. Groundwater flow direction ~~from~~ at SWMU 8 follows a ~~west~~south-southwest trend (see Figure 2-5) ~~(Bhate, 2006b)~~. ~~SWMU 8 groundwater depth and flow direction is influenced by leaking underground utilities in the vicinity of Building 232.~~ The newly installed wells will be placed to characterize groundwater conditions underneath Buildings 231 and 232.

6.2.2.1 Building 231 Soil Boring~~, Soil-Vapor Implants, Indoor Air,~~s and Monitoring Wells

In Building 231, up to ~~four~~ 12 soil borings will be drilled to define soil contamination below the structure (Figure 6-1). The proposed soil borings within Building 231 will be arranged linearly into four lateral fences, with the first fence located approximately 5 ft north of the inside wall, and subsequent fences spaced approximately 8 ft apart from each other progressing south to north. Soil boring locations have been strategically spaced in order to delineate the SWMU 8 VCM sidewall samples collected by Bhate in 2008 which contained TPH-DRO concentrations exceeding NMED TPH Screening Guidelines for unknown oil (800 mg/kg) (NMED, 2006) (see Figure 1-6). If visual evidence or elevated PID headspace readings are not present in the second (or third) fence of soil boring locations, the boreholes in the next successive fence to the north will not be advanced.

~~The first of these borings (SWMU-8-DP04) will be approximately 2 ft north of the inside wall and 6 ft downgradient from the confirmation sample SWMU-8-01-07 collected by EBASCO in 1995 (see Figure 10-1 in Appendix B-1 of this Work Plan). This boring~~One soil boring (SWMU-8-DP05) will be drilled to a depth of approximately 14 ft bgs and converted into a permanent 1-inch monitoring well (SWMU-8-DP05) with 5 or 10 ft of 0.01 inch slot pre-packed screened interval ~~(SWMU-8-DP04)~~ upon completion of soil sampling (Figure 6-2) ~~(Figure 6-1)~~.

The remaining ~~three~~ 11 proposed soil borings within Building 231~~, SWMU-8-DP05 through SWMU-8-DP07,~~ will be ~~located to the north and northeast of SWMU-8-DP04 (Figure 6-1). These three borings will be drilled~~advanced to a depth of approximately 10 ft bgs (Figure 6-1). Once soils have been obtained for sampling purposes, these

borings will be abandoned with hydrated bentonite chips according to HAFB SOP-10. A concrete patch will be placed atop the hydrated bentonite, restoring the concrete slab to its original condition. ~~Within two feet of each of these soil boring locations a permanent sub-slab soil-vapor monitoring point will be installed to obtain a realistic representation of the soil-vapor conditions underneath Building 231 (Figure 6-2). An indoor air sample from approximately 5 feet aboveground will be obtained from within Building 231 approximately 5 ft inside the south wall (Figure 6-3). The sample height has been chosen to mimic the breathing zone for most Building 231 employees.~~

~~One additional monitoring well will be installed outside of Building 231. This monitoring well (SWMU-8-DP08) will be located 4 feet off of the western wall, approximately twenty feet northwest of the southwest corner (Figure 6-4). This well will be drilled to approximately 14 ft bgs and converted into a permanent 1-inch monitoring well with 5 or 10 ft 0.01 inch slot pre-packed screened interval upon completion of soil sampling.~~

Undisturbed geotechnical samples will be collected from a DPT soil boring approximately 3 ft off the southeast corner of Building 231 (Figure 6-1). This location was chosen due to its upgradient position in regards to SWMU 8. Soil samples without contamination make ideal geotechnical soil samples. This soil boring will be labeled SWMU-8-DP16~~09~~, and geotechnical samples will be obtained from approximately half way between ground surface and the top of the groundwater table.

6.2.2.2 Building 232 Soil Boring~~, Soil-Vapor Implants, Indoor Air,~~s and Monitoring Wells

In Building 232, up to ~~four~~ 12 soil borings will be drilled to define soil contamination below the structure (Figure 6-1). The proposed soil borings within Building 232 will be arranged linearly into four lateral fences, with the first fence located approximately 5 ft south of the inside wall, and subsequent fences spaced approximately 8 ft apart from each other progressing north to south. Soil boring locations have been strategically spaced in order to delineate the SWMU 8 VCM sidewall samples collected by Bhate in 2008 which contained TPH-DRO concentrations exceeding NMED TPH Screening Guidelines for unknown oil (800 mg/kg) (NMED, 2006) (see Figure 1-6).~~The first of these borings (SWMU-8-DP10) will be approximately 2 ft south of the inside wall and 6 ft downgradient from the confirmation sample SWMU-8-02-07 collected by Ebasco in 1995 (shown on Figure 10-1 in Appendix B-1 of this report). This~~ If visual evidence or elevated PID headspace readings are not present in the second (or third) fence of soil boring locations, the boreholes in the next successive fence to the south will not be advanced.

One soil boring (SWMU-8-DP19) will be drilled to a depth of approximately 14 ft bgs and converted into a permanent 1-inch monitoring well (SWMU-8-~~DP10~~DP19) with 5 or 10 ft of 0.01 inch slot standard PVC screened interval upon completion of soil sampling

(Figure 6-2). Pre-packed screens cannot be installed at this location due to the DPT equipment limitations for the limited access Dolly mounted rig.

The remaining ~~three~~ 11 proposed borings within Building 232~~, SWMU-8-DP11 through SWMU-8-DP13,~~ will be ~~located to the east and northeast of SWMU-8-DP10 (Figure 6-1). These three borings will be~~ advanced~~drilled~~ to a depth of approximately 10 ft bgs. Once soils have been obtained for sampling purposes, these borings will be abandoned with hydrated bentonite chips according to HAFB SOP-10. A concrete patch will be placed atop the hydrated bentonite, restoring the concrete slab to its original condition.

One additional monitoring well will be installed outside of Building 232. This monitoring well (SWMU-8-DP29) will be located approximately 70 feet downgradient of the former Building 231 OWS (Figure 6-2). While drilling this well, soil will be logged for lithology and headspace readings, however soil samples will not be obtained for offsite analysis. This well will be drilled to approximately 14 ft bgs and converted into a permanent 1-inch monitoring well with 5 or 10 ft 0.01 inch slot pre-packed screened interval upon completion of soil sampling. ~~Within two feet of each of these soil boring locations a permanent sub-slab soil-vapor monitoring point will be installed to obtain a realistic representation of the soil-vapor conditions underneath Building 232 (Figure 6-2). An indoor air sample from approximately 5 ft aboveground will be obtained from within Building 232 approximately 5-ft inside the north wall (Figure 6-3). The sample height has been chosen to mimic the breathing zone for most Building 232 employees.~~

6.3 Sampling Procedures

This section describes the sampling procedures and technologies to be used during the project. References are made to documents describing standard methodologies from a variety of sources including:

- *Final Basewide Quality Assurance Project Plan* (Bhate, 2003a)
- HAFB SOPs from Appendix A of the HAFB Basewide QAPP (e.g., HAFB-SOP-#) (Bhate, 2003a). The specific HAFB SOPs for this sampling event are listed below:
    - HAFB SOP-1 Documentation, Sample Handling, Chain-of Custody, and Shipping
    - HAFB SOP-2 Sampling Equipment Documentation
    - HAFB SOP-3 Staking, Utility Clearance, and Permitting
    - HAFB SOP-4 Direct Push Sampling for Soil and Groundwater
    - HAFB SOP-5 Soil Sampling for Chemical Analysis
    - HAFB SOP-6 Procedure for Field Screening of Volatile Organics
    - HAFB SOP-7 Lithologic Description and Geotechnical Sampling
    - HAFB SOP-8 Groundwater Sampling for Chemical Analysis

- o HAFB SOP-9 Field Management of Investigation-Derived Waste (IDW)
- o HAFB SOP-10 Borehole Abandonment and Site Restoration

- SOPs prepared by equipment manufacturers (e.g., Geoprobe Systems® Dual Tube [DT325] and Macro-Core® MC5 Sampling System Standard Operating Procedure, Technical Bulletins No. MK3138 and MK3139 respectively) (included in Attachment ~~C~~ B and Attachment ~~D~~C of this Work Plan) (Geoprobe Systems®, 2006a and 2006b).

- Bhate SOP No. 10 *Subsurface Water Investigation* (included in Attachment D of this Work Plan)

~~The specific HAFB SOPs for this sampling event are listed below:~~

~~HAFB SOP-1 Documentation, Sample Handling, Chain-of Custody, and Shipping~~

~~HAFB SOP-2 Sampling Equipment Documentation~~

~~HAFB SOP-3 Staking, Utility Clearance, and Permitting~~

~~HAFB SOP-4 Direct Push Sampling for Soil and Groundwater~~

~~HAFB SOP-5 Soil Sampling for Chemical Analysis~~

~~HAFB SOP-6 Procedure for Field Screening of Volatile Organics~~

~~HAFB SOP-7 Lithologic Description and Geotechnical Sampling~~

~~HAFB SOP-8 Groundwater Sampling for Chemical Analysis~~

~~HAFB SOP-9 Field Management of Investigation-Derived Waste (IDW)~~

~~HAFB SOP-10 Borehole Abandonment and Site Restoration~~

The following sections describe the locations and procedures for soil~~, soil-vapor, indoor air,~~ and groundwater sampling along with the groundwater monitoring well installation~~, soil-vapor implant installation, sampling,~~ and analysis to be performed for each.

6.3.1 Environmental Media to be Sampled

~~Three~~ Two environmental media (matrices) will be sampled during the RFI, as follows:

1. Soil
   - o DPT core soil sampling

2. Groundwater
   - DPT-installed permanent wells and existing wells

~~3.Air~~

~~oSub-slab soil vapor implants~~

~~o24-hour Composite Indoor Air Samples~~

6.3.2 Soil Sampling

6.3.2.1 Soil Sample Locations and Analysis

As described in Section 6.2~~.21~~ of this Work Plan, soil sampling will be undertaken at each of the pre-determined sampling locations in close proximity to SWMU 8. Each location will be cleared for subsurface utilities in accordance with HAFB SOP-3 in the HAFB Basewide QAPP (Bhate, 2003a). Soil samples will be collected continuously from soil borings using DPT methodology in accordance with HAFB SOP-4. Each boring will be visually classified and lithology described in the field according to HAFB SOP-7 and the Unified Soil Classification System (USCS) (American Society for Testing and Materials [ASTM] D 2487-92 and ASTM D 2488-90) (ASTM 2006a and 2006b). Soil sampling will follow HAFB SOP-5 of the HAFB Basewide QAPP (Bhate, 2003a). The specific locations of the borings may be modified based on site-specific (access, underground utilities, overhead obstructions, etc.) field conditions. Soil sampling locations may also be adjusted in the field based on the presence (or absence) of visual, olfactory, or elevated PID headspace evidence indicating petroleum contamination, of lack thereof, in soil from adjacent boreholes.

Each soil core will be field screened every 2 feet with a PID. Soil samples with the highest PID readings will be retained for offsite laboratory analysis. Notation will also be made of any visual (discoloration) and/or aromatic observations that are indicative of potential contamination. These initial screening methods will serve as primary indicators of impacts from the release from the OWS (SWMU 8). If no elevated PID readings are observed in the field, soil samples will be obtained from ~~the vadose zone (approximately 1 ft above water table), and at a depth of 7 ft bgs. The goal of collecting soil samples at~~ a depth of 7 ft bgs, regardless of saturation is in order to be consistent with confirmation samples obtained during the Phase I excavation (EBASCO, 1995) and the VCM excavation sidewall samples collected by Bhate in 2008 (see Appendix B-5 of this Work Plan).

~~Eight~~ Twenty-four DPT soil borings (SWMU-8-DP04 through SWMU-8–DP15~~07~~ and SWMU-8-DP17~~0~~ through SWMU-8-DP28~~13~~) ~~will be completed~~are proposed in the immediate vicinity of SWMU 8 (former Building 231 Oil/Water Separator) at the locations shown in Figure 6-1. ~~One additional soil boring (SWMU-8-DP08) will be~~

~~completed off the southwest corner of Building 231 (Figure 6-1).~~ A total of up to 27~~0~~ soil samples, including three~~two~~ duplicate samples, will be collected for chemical analysis. Each soil sample will be analyzed by an offsite laboratory for VOCs, SVOCs, TPH (DRO/GRO/ORO), PCBs, and TAL metals. Samples selected for laboratory analysis will be labeled, handled, and prepared for shipment in accordance with HAFB SOP-1. The soil samples submitted for chemical analysis will be shipped to Accutest Laboratories in Orlando, Florida for analysis as summarized in Table 6-1.

Additionally, two undisturbed geotechnical samples will be collected from one DPT borehole (SWMU-8-DP16~~09~~) (~~Table~~ Figure 6-1). The upgradient location of SWMU-8-DP16~~09~~ ~~(Figure 6-1)~~ makes it an ideal location for a non-impacted geotechnical soil sample. Geotechnical samples obtained from this boring will be collected from the vadose zone and half way between ground surface and the water table. The two geotechnical soil samples will be analyzed for moisture content, dry bulk density, specific gravity and fractional organic carbon content (see Table 6-1), and will also be shipped Accutest Laboratories in Orlando, Florida for analysis.

The locations of completed DPT boreholes within Buildings 231 and 232 will be systematically measured (to scale) from the inside walls of each building and placed onto a figure. Using~~A qualified surveyor will locate the DPT boreholes using~~ a global positioning system (GPS) to plot indoor borehole locations will not be possible due to the roof of Buildings 231 and 232 blocking out the satellite reception required to do so. All horizontal coordinates will be digitized based on the drawn-to-scale figure created in the field, and referenced to the State Plane Coordinate System, New Mexico Central ~~and surveyed to~~with an accuracy of +/- 1.0 ft.

6.3.2.2 Direct Push Soil Sampling Procedures~~Direct Push Soil Sampling~~

Samples will be collected using DPT in all areas surrounding SWMU 8. Soil sampling at Building 231 will be accomplished using a Geoprobe Systems® DT325 Dual Tube Sampling System (coring tool) in accordance with the Standard Operating Procedure (Geoprobe Systems® Technical Bulletin MK3138) ~~including~~ included in Attachment B~~C~~ of this Work Plan. Due to limited access issues, soil sampling within Building 232 will be accomplished using a Geoprobe Systems® Macro-Core® MC5 Sampling System (coring tool) in accordance with the Standard Operating Procedure (Geoprobe Systems® Technical Bulletin MK3139) included in Attachment C~~D~~ of this Work Plan. Samples will be collected from the coring tools for offsite analysis. The coring tools will be advanced to a depth of approximately 10 ft bgs to collect soil samples for analysis in proposed soil boring locations (SWMU-8-DP04,~~5~~ ~~through~~ SWMU-8-DP06 through SWMU8-DP18~~7~~, ~~SWMU-8-DP09, and SWMU-8-DP1~~and SWMU-8-DP20~~1~~ through SWMU-8-DP28~~9~~~~13~~), and approximately 14 ft bgs in borings which will be converted to permanent groundwater monitoring wells (SWMU-8-DP05~~4~~, SWMU-8-DP19~~08~~, and SWMU-8-DP29~~10~~).

During soil sampling, the Geoprobe Systems® DT325 and Macro-Core® MC5 tool will be removed from the ground and the clear PVC liner will be removed from the liner sheath at the ground surface. The liner will be capped and marked with the depth of the top and bottom of the liner using an indelible pen. The borehole number will also be written on the liner. The liner will then be opened with a cutting tool and the samples will be obtained for lithologic log, headspace readings (PID), and offsite analysis.

The soil samples taken for geotechnical analysis will be obtained from approximately half the distance between ground surface and the top of water table. These samples will be taken in a thin walled tube sampler, with tube ends capped and the top and bottom ends of the tube labeled with depths. The soil core samples will be shipped to Accutest Laboratories in Orlando, Florida for analysis.

6.3.3 Monitoring Well Installation Activities

Three additional permanent groundwater monitoring wells (SWMU-8-DP05~~4~~, SWMU-8-DP19~~08~~, and SWMU-8-DP29~~10~~) will be installed during this investigation to delineate the horizontal extent of potential groundwater contamination migrating from SWMU 8 underneath Buildings 231 and 232. The new SWMU 8 monitoring wells, along with existing monitoring wells shown on Figure 6-24, will characterize and delineate the horizontal extent of any potential groundwater contamination underneath Buildings 231 and 232.

6.3.3.1 Monitoring Well Locations

As illustrated on Figure 6-24, monitoring wells SWMU-8-DP05~~4~~ and -DP19~~10~~ will be installed within Buildings 231 and 232 respectively, approximately 10 ft ~~downgradient~~ north and south of the former Building 231 OWS~~SWMU 8~~ to determine any potential impact to groundwater underneath ~~from the former Building 231 OWS~~the buildings. One additional monitoring well (SWMU-8-DP29~~08~~) will be installed approximately 75~~0~~ feet downgradient from the former Building 231 OWS~~SWMU 8~~ to determine the nature and extent of groundwater contamination ~~due west~~downgradient of the former ~~Building 231~~ OWS. Additionally, three existing monitoring wells (SWMU-8-DP01 through SWMU-8-DP03) will be incorporated into the SWMU 8 monitoring well network (6 wells total). The proposed monitoring well network of existing and new wells will characterize the groundwater conditions at SWMU 8 as well as determine horizontal extent of potential groundwater contamination underneath Buildings 231 and 232.

6.3.3.2 Monitoring Well Installation and Development

The three new monitoring wells will be constructed in accordance with Bhate SOP No. 10 (included in Attachment D of this Work Plan) using DPT drilling methods. A qualified geologist will log each borehole. Based upon the depth to groundwater determined

from the DPT soil borings, the permanent monitoring wells will be installed to a depth of approximately 14 ft bgs. The soil coring tool will be advanced at least 5 feet below the water table within the same hole that the soil samples were collected and the core barrel will then be removed, leaving the outer casing in place. Monitoring wells SWMU-8-DP05~~4~~ and SWMU-8-DP29~~08~~ will extend to a minimum depth of 5 feet below the water table and be completed with 5 or 10 feet of 1-inch diameter, 0.01 inch pre-packed PVC screen. The pre-packed screens will be lowered to the bottom of the outer casing of the Geoprobe Systems® DT325 Dual Tube Sampling system. The pre-packed screens will be connected to 1-inch, PVC flush joint riser pipe in 5 or 10 foot length sections to the ground surface. A 1-inch locking cap will be secured at the top of each monitoring well.

Monitoring well SWMU-8-DP19~~10~~ (Building 232) will be constructed of 5 or 10 feet of standard 1-inch 0.01 slot PVC well screens due to the fact that the limited access Dolly Probe, needed in Building 232, is unable to push tooling large enough to set pre-packed screens. In Building 232, once soil sampling is complete, the Geoprobe Systems® Macro Core® MC5 tool string will be retracted all the way from the borehole. Well installation in this location will be accomplished by going back down the open hole with a 2-inch outer casing drill pipe and an expendable steel drive point. Once the total depth has been achieved, the standard 1-inch PVC screen and riser will be lowered to the bottom of the borehole and the outer casing of the 2-inch drill pipe will be retracted, exposing the well screen to the formation.

Upon removal of all DPT tooling from the borehole, additional sandpack consisting of 10/20 Silica Sand will be placed around the well screen to a height of 2 ft above the top of the screened interval. A minimum 2 ft thick granular bentonite seal will be placed above the sand filter pack and hydrated. The remaining annular space will be backfilled with neat cement. The wells will be concreted in as flush mount well completions (water tight vault with a rubber gasket).

The completed wells will be developed in accordance with Bhate SOP No. 10 to remove fine particulates and improve hydraulic communication with the surrounding saturated material (see Attachment D of this Work Plan). Well development will begin no sooner than ~~48~~ 12 hours after grouting. Water levels in newly installed wells will be monitored until levels have reached equilibrium based on three successive water level measurements made over a period of 10 minutes. Once the static water level has been recorded, the well will be developed to remove sediment, and any drilling additives which may have been introduced into the borehole and formation during drilling and installation activities. Each well will initially be surged in 2 to 3 foot intervals from the bottom of the screened interval to agitate fine grained sediment from the filter pack. At the completion of surging, well development will be conducted with a peristaltic pump attached to polyethylene tubing to remove sediment from the filter pack and well casing.~~Well development will initially be conducted with a stainless steel bailer to~~

~~remove sediment.~~ The use of pre-pack screens at two out of three well locations will minimize the amount of sediment entering these monitoring wells. Monitoring well development will take place by over-pumping each well until at least five well volumes have been removed, and the turbidity, dissolved oxygen, pH, specific conductivity, and temperature have stabilized by +/- 10 percent for at least three consecutive readings with a multi-parameter groundwater monitor.

6.3.4 Groundwater Sampling

Once well development has been completed, and adequate time for recharge (~~24~~ 14 ~~hours~~days) has been allowed, the 3 new monitoring wells (SWMU-8-DP05~~4~~, SWMU-8-DP19~~08~~, and SWMU-8-DP2~~10~~9) will be purged using low flow sampling techniques (Bhate SOP No. 10 [Attachment D]~~HAFB SOP-8~~). A peristaltic pump equipped with ~~polypropylene~~ polyethylene tubing will be used to bring sample water to the surface where indicator field parameters will be monitored in a flow through cell. Field parameters will be measured and recorded every 1 well volume. Groundwater samples will not be obtained for offsite analysis until 3 consecutive field parameter measurements have stabilized (i.e., minimum 3 well volumes). Stabilization occurs when pH measurements remain constant within 0.1 units; the ~~turbidity,~~ dissolved oxygen, ~~pH,~~ specific conductivity, and temperature measurements vary by no more than 10 percent: and turbidity by no more than 5 nephelometric turbidity units. Utilizing low-flow purging and sampling techniques may require removal of a greater volume of water than three to five volumes. Once field parameters have stabilized, groundwater samples to be analyzed for VOCs will be collected with a disposable ½-inch Teflon® bailer. Following the collection of groundwater samples for VOC analysis, samples for the remaining parameters will be collected with the peristaltic pump using low flow sampling techniques. The TAL metals groundwater samples will be filtered with a 0.45 micron filter for dissolved metals analysis. Additionally, the three existing wells (SWMU-8-DP01 through SWMU-8-DP03) will be purged and sampled using the procedures outlined above. A new length of ~~polypropylene~~ polyethylene tubing and disposable Teflon® bailer will be used for each well and the silicone tubing in the peristaltic pump head will be replaced with a new piece of tubing for each well. Water level indicators will be decontaminated prior to use at each well.

A total of 7 groundwater samples including one duplicate sample will be collected from the 6 monitoring wells and will be analyzed by an offsite NELAP certified laboratory for VOCs, SVOCs, TPH (DRO/GRO/ORO), PCBs, TAL metals, and TDS. Monitoring well groundwater samples will be labeled, handled, and prepared for shipment in accordance with HAFB SOP-1. The groundwater samples which will be submitted for chemical analysis are summarized in Table 6-2.

6.3.4.1 Groundwater Elevations

Prior to groundwater sampling, the water level in each well will be gauged to the nearest 0.01 ft using an electronic water level indicator.~~Twenty four hours after each of the 6 monitoring wells that comprise the SWMU-8 groundwater sampling plan have been sampled, groundwater elevations will be measured.~~ The depth to water information will be used to calculate the volume of water to be purged from the well prior to sample collection. Elevations will be measured for the 3 new wells (SWMU-8-DP05~~4~~, SWMU-8-DP19~~08~~, and SWMU-8-DP21~~09~~) and the three existing wells (SWMU-8-DP01 through SWMU-8-DP03) shown on Figure 6-2~~4~~. A current potentiometric surface map of SWMU 8 will be developed from the groundwater elevation data collected during this RFI.

6.3.4.2 Surveying

The locations of new monitoring wells within Buildings 231 and 232 (SWMU-8-DP05 and SWMU-8-DP19) will be systematically measured (to scale) from the inside walls of each building and placed onto a figure. Using a GPS to plot indoor borehole locations will not be possible due to the roof of Buildings 231 and 232 blocking out the satellite reception required to do so. All horizontal coordinates will be digitized based on the drawn-to-scale figure created in the field, and referenced to the State Plane Coordinate System, New Mexico Central with an accuracy of +/- 1.0 ft. Top of casing elevations will not be obtained from the two new monitoring wells within Buildings 231 and 232 due to roof interference with satellite reception. Therefore the potentiometric map will not include groundwater elevation data from monitoring wells SWMU-8-DP05 and SWMU-8-DP19.

A qualified New Mexico Surveyor will survey the 1~~3~~ new monitoring well outside of Buildings 231 and 232 (SWMU-8-DP29) and existing monitoring well locations using GPS in accordance with methods described in the Basewide QAPP (Bhate, 2003a). Horizontal locations will be relative to the State Plane Coordinate System, New Mexico Central and surveyed to an accuracy of +/- 1.0 ft. Vertical elevations will be referenced to the North American Datum (NAD) 1983. The top of casing (vertical control) will be used to determine the depth and elevation of the groundwater and surveyed to an accuracy of +/-0.01 ft. During this investigation the source area will be mapped to scale showing ancillary structures, sampling locations, buildings, roads, sidewalks, paved and unpaved areas. Additionally, all maps will include a coordinate system (e.g., ~~Universal Transverse Mercator [UTM], latitude/longitude~~New Mexico State Plane Coordinate System, New Mexico, Central) and the site boundaries.

~~6.3.5Soil-Vapor~~

~~One of the routes of exposure to be assessed in this RFI is indoor inhalation of vapors that may migrate from chemical impacts below the slabs of Buildings 231 and 232. Due~~

~~to shallow groundwater below Building 231 and 232, sub-slab sampling was chosen for this project over traditional soil-vapor wells set at depth with DPT. An estimate of indoor inhalation risk resulting from vapor migration can be obtained by using an attenuation factor of 0.01 (USEPA, 2002). It is important to stress that this attenuation factor will be used simply as an estimation tool of the ratio between soil-vapor concentrations and indoor air concentrations.~~

~~The use of active soil-vapor sampling will give a realistic representation of the soil-vapor conditions underneath Buildings 231 and 232 resulting from a release from the former Building 231 OWS. Three sub-slab soil-vapor sampling points will be installed inside each building (6 total). A total of seven sub-slab soil-vapor samples, including one duplicate, will be collected for chemical analysis. The locations of the proposed sub-slab soil-vapor points are illustrated on Figure 6-2. As mentioned above, the method of soil-vapor monitoring point installation in these two buildings is limited due to the shallow depth of groundwater (see Table 1 in Appendix B-4 of this Work Plan). Sub-slab soil-vapor implants were chosen over traditional soil-vapor wells, installed at depth in DPT borings, due to the occurrence of shallow groundwater onsite. Sub-slab soil vapor implants will consist of ¼ inch outer diameter (OD) Teflon® tubing connected to an aluminum vapor implant below grade and Swagelok® stainless steel compression fittings and caps at grade. Samples will be collected into 400-milliliter (mL) SUMMA® canister "mini-can" sample canisters with flow controllers, particulate filters, and vacuum gauges in line along the sample train to the canister. Leak detection will be performed during the purging and sampling process using helium gas as a tracer.~~

~~Sub-Slab Soil Vapor Implants~~

~~The installation of sub-slab vapor implants will follow H&P Mobile Geochemistry *Sub-Slab Soil Vapor Standard Operating Procedures (For Vapor Intrusion Applications)* (October, 2004) (included in Attachment B of this Work Plan). The installation process requires drilling a 1/2-inch OD core hole through the concrete slab with a rotary hammerdrill and a 9-inch bit. Once through the concrete and into sub-slab material (e.g., sand or gravel) slab thickness will be measured. Drilling into sub-slab material creates a void that is free of obstructions which will aid in setting the implant. The ideal length of ¼-inch OD Teflon® tubing will depend on the slab thickness. The bottom of the Teflon® tubing will not extend below the bottom of the concrete slab more than one inch to allow ample space for the aluminum vapor implant. The use of an implant at the bottom of the Teflon® tubing will prevent the sample point from becoming plugged and unusable after repeated sampling events.~~

~~Since these will be permanent monitoring points with a flush surface completion, a larger diameter hole (1 inch) in the upper 1-inch of the concrete slab will be required to leave ample room for the stainless steel Swagelok® fitting and cap to attach to the probe tubing with a ferrule (compression fitting) and nut. Once tubing is in place, 10 to 20~~

~~mesh silica sand will be placed into the hole up to the bottom of the concrete slab, covering the aluminum implant. Granular bentonite will be placed to height of approximately 2-inches above the sanded interval and hydrated with potable water. After allowing the bentonite to congeal for approximately 15 to 20 minutes, quick-setting concrete/Portland cement mix (or mortar mix) will be placed up to the Swagelok® cap fitting and allowed to cure. A minimum of 24 hours will be given after setting the quick-setting concrete/Portland cement mix prior to sampling the vapor implant to ensure adequate initial probe seal.~~

~~A qualified surveyor will locate the sub-slab soil-vapor implants using a GPS. All horizontal coordinates will be referenced to the State Plane Coordinate System, New Mexico Central and surveyed to an accuracy of +/- 1.0 ft.~~

~~6.3.6Soil-Vapor Sample Collection~~

~~When performing soil-vapor sampling activities, the following atmospheric information will be recorded in the field notebook, if appropriate (contact the local airport or other suitable information source [e.g., weatherunderground.com] to obtain the information):~~

- ~~Wind speed and direction,~~
- ~~Ambient temperature (indoor and outdoor),~~
- ~~Barometric pressure, and~~
- ~~Relative humidity~~

~~A short piece of ¼ inch OD Teflon® tubing will be connected to the top of the sub-slab vapor monitoring point with a compression fitting and ferrule. The male threads on this fitting will be wrapped in Teflon® tape to prevent leakage. The ¼-inch OD Teflon® tubing will extend vertically, exiting the top of the tracer gas enclosure (Figure 6-5). A 3-way isolation valve will be placed at the end of the sample tubing allowing for smooth transition from purging, with a multi-gas meter, to sampling, with a 400-mL Summa® mini-can, without drawing any ambient air into the sample train. Each 400-mL Summa® mini-can will have its own flow meter, particulate filter, and vacuum gauge to prevent cross-contamination between sample locations.~~

~~With a multi-gas meter connected to the sample tubing, 600-mL (0.6-liters [L]) of air will be purged from the vapor probe line at a rate of 300 milliliters per minute (mL/min). Purging will be performed with a LANDTEC, *GEM-500*™ which has flow rate of 300-mL/min, resulting in a two minute purge time to reach a volume of 600-mL. During the purge, the *GEM-500*™ will monitor Carbon Dioxide (CO_2), Oxygen (O_2), and Methane (CH_4) concentrations from the subsurface. The output from the *GEM-500*™ will be collected in a 1-L Tedlar® bag, from which Helium concentration will be measured with a separate meter. The Tedlar® bag will also provide a visual reference as to the volume of soil-vapor purged from the sample location. Elevated CO_2 concentrations paired with lowered O_2 concentrations are good indicators of subsurface soil-vapor and will provide~~

~~secondary insurance of sample integrity. It is important that over purging of soil-vapor does not occur, as this will encourage short circuiting of the sample train to ambient air, either through cracks in the slab, or from the outside edge of the building foundation. During the purging process the seal around the vapor probe will be checked by using helium gas as a leak indicator.~~

~~Once the correct purge volume has been removed, and seal integrity has been confirmed, the Summa® mini-can portion of the sample train will be connected to the 3rd port of the 3-way valve. The brass plug will be removed from the 400-mL Summa® mini-can and the flow controller and canister vacuum gauge will be connected to the 3-way valve. Before sampling can commence, the 3-way valve will be turned to isolate the tubing between the Summa® mini-can and the *GEM-500*™. The ambient air within this section of tubing will be evacuated with the pump in the *GEM-500*™ to prevent it from compromising the soil-vapor sample. Once this section of tubing has been evacuated, the 3-way valve will be turned to the sample ready position, between the sample point and Summa® mini-can sample container. Prior to opening the valve on the Summa® mini-can, the flow controller number and the appropriate mini-can canister number will be recorded in the Soil-Gas Sample Collection Log (in Attachment C of this Work Plan) and chain-of-custody form. The Summa® mini-can valve will be opened, and the time sampling began along with initial canister vacuum will be recorded on the sample collection log. The flow controller attached to the Summa® mini-can is fitted with a sapphire restrictor that varies in size to target a flow range. A four minute flow controller will be used in this sampling event, giving a sample inlet rate of 100 mL/min.~~

~~Upon termination of sample collection, field technicians will record the final vacuum from the Summa® mini-can vacuum gauge. Sample collection will be stopped by closing the valve on the mini can. Date and local time (24-hour basis) of valve closing will be recorded in the sample collection log and chain-of-custody form. The flow controller will be removed from the Summa® mini-can, and the brass plug re-installed on the canister fitting, tightened with a 9/16 inch wrench. The canister and flow controller will be packaged in the shipping container supplied by the laboratory. The Summa® mini-can sample canisters do not require preservation with ice or refrigeration during shipment. Appropriate forms and sample labels will be completed as directed by the laboratory (e.g., affix card with a string). Sticker type labels will not be placed on the Summa® mini-cans. The chain-of-custody form will be completed and requisite copies placed in a shipping container. The shipping container will be closed and affixed with a custody seal to the container enclosure. The container will be shipped to the laboratory via overnight carrier (e.g., UPS or Federal Express) for analysis. If samples are shipped on a Friday a phone-call will be placed to the laboratory providing advance notice of weekend arrival. The sub-slab soil-vapor samples will be analyzed for VOCs by USEPA Method TO-15 (Table 6-3) by H&P Mobile Geochemistry in Carlsbad, California.~~

~~Administering Tracer Gas~~

~~When collecting subsurface soil-vapor samples as part of a vapor intrusion evaluation, a tracer gas serves as a quality assurance/quality control device to verify the integrity of the vapor implant seal. A leak testing procedure will be conducted at each of the sub-slab soil-vapor sampling locations to demonstrate that the sampling system does not allow for short-circuiting to occur between ambient air and the sampling train. Without the use of a tracer, verification that a soil-vapor sample has not been diluted by surface air is impossible. Depending on the nature of the contaminants of concern, a number of different compounds can be used as a tracer. Common tracer compounds include acetone, iso-propanol, and helium. Helium has been chosen for this project due to the ability to perform real-time tracer monitoring in the field, rather than have the laboratory include acetone or propanol in the soil-vapor analysis, and discovering a substantial leak had occurred, well after the sampling has been completed.~~

~~The leak test procedure involves saturating the air above the sample location with helium during the purging and sampling process and monitoring sample tubing output during the purging process for helium gas with a helium gas detector. A 2-ft by 2-ft piece of polyethylene sheeting will be placed on the ground at each sample location with the sample tubing passing through a small opening near the center of the sheeting. An enclosure will be placed over the sample probe and sealed to the plastic sheeting with hydrated granular bentonite worked into a paste. This enclosure will serve as an enrichment zone for the helium tracer gas. A layer of sand will be placed on top of the plastic sheeting edges to seal it to the ground surface. Teflon® ¼-inch OD sample tubing will pass through and exit the top of the enclosure through a small opening where a rubber grommet seal will hold it firmly in place. The enclosure will also have an input opening for application of helium gas. This input will be on the side of the enclosure, near the ground surface. A second port, on the opposite side of the helium input will be used to monitor helium enrichment within the enclosure. The output from this port will be ¼ inch OD Teflon® tubing extended approximately 4 feet away from the sampling area to minimize background helium concentrations in the sampling area. The helium output tubing will have an on-off valve on the end to keep the enclosure closed off completely from ambient air except when monitoring for enrichment within. Both of these helium ports will have the same rubber grommet seals used for the sample tubing holding them firmly in place. By comparing the helium concentrations within the enclosure (high ppm) to the concentration from the soil-vapor implant during purging (little to no ppm) seal integrity will be established.~~

~~Once the helium enclosure is sealed in place it is necessary to open the helium tank and set the flowmeter at approximately 200 mL/min. The helium will be allowed to flow for 1 minute to fill the helium enclosure prior to starting the purge. Helium concentration readings will be measured with a Dielectric, *Model MGD-2002,* Multi-Gas Leak Detector. Once the enclosure has been given one minute to fill, it is important to take a tracer gas~~

~~concentration reading within the enclosure prior to purging to confirm helium enrichment. This enclosure reading will be taken from the helium output port from the enclosure (Figure 6-5). Once enrichment of the enclosure has been confirmed, purging of the sample point will commence. 600-mL of sub-slab soil-vapor will be removed, and the helium concentration of the purged soil-vapor will be monitored from a Tedlar® bag collected from the outlet of the *GEM-500*™ pump (Figure 6-5). Once it has been established that no leakage is occurring, sample collection can begin.~~

~~After Summa® mini-can sample collection has been completed, and the canister has been closed, the 3-way valve will be switched back to the *GEM-500*™ pump. With the sample point and pump isolated, an additional 600-mL of soil-vapor will be purged from the sample point. The helium concentration will be monitored from the additional purged volume and noted on the sample collection log. Helium concentration will also be measured within the enclosure following sample collection and noted on the sample collection log (see Attachment C of this Work Plan). The final set of readings serve to verify that helium did not make its way below the slab during the sampling process, and to ensure that the helium concentration within the enclosure has remained constant throughout the sampling process.~~

~~The Dielectric, *Model MGD-2002,* Multi-Gas Leak Detector monitoring device has detection limits in the low parts per million (ppm) (25 ppm) range and will be more than adequate for screening for the tracer gas. An acceptable level of leakage is subjective. Ideally there will be no sign of helium gas during purging and after sampling. The State of New York allows a maximum helium leakage level of 10% (New York State Department of Health, 2006), and some consultants allow up to 20%. The allowable helium leak level for sampling at SWMU 8 will be 5%. Mere presence of low levels of helium in the purged soil-vapor will not be cause for alarm as it does not affect the TO-15 analysis. If high concentrations (>20%) of tracer gas are observed during the purging process, the probe seal will be enhanced to reduce the infiltration of ambient air prior to the sampling procedure. This seal enhancement may also include patching any visible cracks in the slab within the vicinity of the sample collection area. For this project; if helium concentrations below 5% are not attainable after seal repair, the vapor point will be abandoned and a new implant installed.~~

~~During the initial stages of the sub-slab vapor sampling program, tracer gas will be utilized at each of the soil-vapor sampling locations. If results of the initial samples indicate that the probe seals are adequate, the Project Manager can consider reducing the number of locations at which tracer gas samples are used. At a minimum, at least 10% of the subsequent samples will be supported with tracer gas screening. Permanent soil-vapor sampling probes will be tested annually for integrity if a long-term monitoring program ensues.~~

~~6.3.7Indoor Air~~

~~One indoor ambient air sample will be collected in both Buildings 231 and 232 (Figure 6-3). The purpose of these samples will be to act as a background or baseline for any chemicals which may already be present in the indoor air of these buildings, not related to a release from SWMU 8. The nature of activities in Building 231 (Auto Hobby Center) may elevate levels of contaminants in the data obtained from indoor air in that particular building. There can be dozens of detectable chemicals in indoor air even without contribution from subsurface impacts (USEPA, 2002).~~

~~Indoor Air Sample Collection~~

~~One 6-L Summa® canister will be placed in both Building 231 and Building 232 to sample ambient indoor air within these buildings. These samplers will be placed along the inside of the southern wall in Building 231, and along the inside of the northern wall in Building 232 (Figure 6-3). Each Summa® canister will be equipped with its own vacuum gauge, flow controller, and particulate filter. Summa® canisters will be placed approximately five feet off the ground to mimic the breathing zone of employees working inside these two buildings. The flow controllers on indoor air Summa® canisters will be set to collect a composite sample over a 24-hour period with a flow rate of 3.7 mL/min.~~

~~Prior to beginning indoor air sampling, an Indoor Air Quality Questionnaire and Building Inventory form will be completed by a field technician (see Attachment E of this Work Plan). Questions on this form will be asked to the senior or most qualified employee present within the building at the time sampling is to occur. The purpose of this questionnaire is to document any potential background contamination sources within the structure. The same atmospheric conditions noted for sub-slab soil-vapor sampling will be recorded on the Indoor Air Sample Collection Log (included in Attachment C of this Work Plan) at the time the Summa® canister is set and retrieved. Care will be taken to ensure the sample canister is not placed adjacent to any obvious sources of contamination such as petroleum based liquids, cleaning agents, paints, solvents, or glues. At the sample location, the reported lab vacuum (28 to 29 inches of Mercury [" Hg]) in the Summa® canister and a background PID reading will be taken and recorded in the sample log prior to the opening of the Summa® canister valve. Once the Summa® canister has been opened, the actual vacuum will be recorded in the sample log. If the initial vacuum is less than 25" Hg the canister will not be used as this would indicate a significant leak, more than varying atmospheric conditions due to change in elevation between the laboratory and the site. A photo will also be taken of the Summa® canister in position so repeated sampling, if necessary, can be performed at the same location consistently.~~

~~Upon termination of sample collection, field technicians will record the final vacuum from the Summa® canister vacuum gauge. Although Accutest laboratories considers any~~

~~vacuum reading below 15" Hg a valid indoor air sample, for this project a more stringent reading below 7" Hg remaining will be considered a valid sample. Sample collection will be stopped by closing the Summa® canister valve. Date and local time (24-hour basis) of valve closing will be recorded in the sample collection log and chain-of-custody form. The flow controller will be removed from the Summa® canister, and the brass plug re-installed on the canister fitting, tightened with a 9/16 inch wrench. The canister and flow controller will be packaged in the shipping container supplied by the laboratory. The Summa® canister does not require preservation with ice or refrigeration during shipment. Appropriate forms and sample labels will be completed as directed by the laboratory (e.g., affix card with a string). Sticker type labels will not be placed on the Summa® canister. The chain-of-custody form will be completed and requisite copies placed in a shipping container. The shipping container will be closed and affixed with a custody seal to the container enclosure. The container will be shipped to the laboratory via overnight carrier (e.g., UPS or Federal Express) for analysis. If samples are shipped on a Friday a phone-call will be placed to the laboratory, providing advance notice of weekend arrival. The indoor air samples will be analyzed for VOCs by USEPA Method TO-15 (Table 6-3) by Accutest Laboratories in Orlando, Florida.~~

~~6.3.8~~6.3.5 Documentation

Documentation, sample handling, chain-of-custody, and shipping will be managed in accordance with HAFB-SOP-1 of the HAFB Basewide QAPP (Bhate, 2003a).

Sampling personnel will use a bound field log book with moisture resistant pages to record pertinent sampling information with waterproof ink in addition to any forms provided in, or specified by applicable SOPs. The log book will identify project name, project number, project manager and telephone number, and principal street address or geographic location of the site. Daily field activities and sampling information will be entered in the log book on dated, initialed, and serially-numbered pages. Corrections will be made to entries by initialed and dated line-out deletions. A diagonal line will be drawn across the remaining blank space of the last page of each day's entry. Each day's entry will be signed and dated by the author.

The date and time of sample preparation, collection, and personnel who conducted sampling will be recorded with the sample identification number in the field log book and on the chain-of-custody form. The names of visitors and any other persons on site will also be recorded in the field log book. Sampling personnel will record the ambient weather conditions and other conditions at the sampling location that may affect sample collection, the apparent representativeness of the sample, or sample analysis.

Sample nomenclature and labeling requirements are described in Section 8~~7~~.2.1 of this Work Plan.

~~6.3.9~~6.3.6 Decontamination

Sampling equipment will be decontaminated as described in HAFB-SOP-2 of the HAFB Basewide QAPP (Bhate, 2003a). Equipment to be steam cleaned includes:

- Geoprobe Systems® DT325 Dual Tube and Macro-Core® MC5 Sampling System - prior to each hole
- DPT drill rigs - prior to demobilization or as needed to remove soil, etc.

Equipment to be washed with soap and potable water supplied by HAFB includes:

- Geoprobe Systems® DT325 and Macro-Core® MC5 System core barrel - prior to each use
- ~~Rotary hammer drill bits – prior to each use~~
- Soil sampling tools (spatulas, spoons etc)

~~6.3.10~~6.3.7 Management of Investigation-Derived Waste

Investigation-derived waste (IDW) will be managed and characterized in accordance with HAFB-SOP-9 of the HAFB Basewide QAPP (Bhate, 2003a). Whenever possible, waste minimization techniques will be used to reduce the amount of IDW. IDW generated by installing the new monitoring wells and subsequent groundwater sampling activities will be managed and characterized according to the following guidelines. Solid waste such as soil core liners, empty sand and bentonite bags, personal protective equipment (PPE), and used tubing, etc., will be placed in trash bags and disposed of in dumpsters on site for ultimate disposal as non-hazardous sanitary waste.

Drill cuttings and excess soils from sampling will be visually assessed for staining and screened with a PID. If the cuttings and/or soils are visibly stained or if they have PID headspace readings above background, they will be contained and temporarily staged at the permitted HAFB FT-31 Landfarm pending receipt of sample analytical results. If analytical results indicate contaminants present at concentrations above the landfarm's acceptance levels, the material will be properly disposed offsite. If the analytical results indicate contaminants present at levels within the landfarm's acceptance levels, the material will be land-farmed. If none of the visual, screening, or analytical results based conditions are met, the material will be spread around borehole locations (outside of buildings) as described in HAFB-SOP-9 of the HAFB Basewide QAPP (Bhate, 2003a).

Decontamination and purge waters (from monitoring well development and sampling) will be locally contained in 5 gallon pails and conveyed to a 1,000 gallon portable storage tank. The 1,000 gallon portable storage tank will be maintained by NationView until disposal through the HAFB WWTP, pending laboratory analysis. Other liquid wastes, such as decontamination rinses, are anticipated to be non-hazardous and as such, can be disposed of through the HAFB WWTP.

6.4 Sample Analysis

This section describes the objectives and procedures associated with the analytical program. The analytical strategy for the SWMU 8 RFI has been designed with past investigation and soil removal activities in mind.

6.4.1 Data Quality Objectives

The analytical methods outlined in Tables 6-1 and~~,~~ 6-2~~, and 6-3~~ of this Work Plan were selected based on their ability to provide reliable results which can be used to determine whether a given contaminant (or contaminant class) is present at concentrations:

- Above reporting limits (RLs),
- Above RLs and below its respective ARAR action level criteria, or
- Above its respective ARAR action level criteria.

In several cases, laboratory method detection limits (MDLs) will be used to compare to ARARs. Concentrations that fall between the practical quantitation limits (PQL) and the MDL will be qualified accordingly.

The selectivity and accuracy of the selected screening techniques have all been adequately proven by virtue of being an accepted method. The screening methods will be used to provide near-real-time data and will be supported by offsite definitive analytical methods.

Screening data will be collected in the field during drilling and sampling activities. Screening data will be monitored using field instruments such as an Organic Vapor Analyzer and~~,~~ Multi-Parameter groundwater meter~~, and Multi-Gas meter~~. All screening data collected during this RFI will be recorded on appropriate field forms ~~(Attachment FE)~~ and included in the SWMU 8 RFI Completion Report.

Analytical chemistry data will be reviewed according to latest revision of the USEPA *Contract Laboratory Program National Function Guidelines for Inorganic Data Review* (October, 2004c) and *Contract Laboratory Program National Functional Guidelines for*

Superfund Organic Methods Data Review (~~October~~June, ~~1999~~2008). One hundred percent (100 %) of the analytical data will be subjected to review modeled after the USEPA Tier I guideline (USEPA Region I, 1996). The Tier I review will include a review of completeness. In addition, as specified by the Project Chemist, the definitive data may also be subjected to review modeled after the USEPA Tier II guideline (USEPA Region I, 1996). This review will compare selected quality control (QC) parameters (holding time, laboratory control sample [LCS], method blanks, field blanks, surrogates, matrix spike [MS]/matrix spike duplicate [MSD]/laboratory duplicate [LD], and field duplicates) and DQOs with the acceptance criteria described in the HAFB Basewide QAPP (Bhate, 2003a) and the HAFB Basewide QAPP Addendum (in Appendix A of this Work Plan).

Qualifiers may be applied to data that fails to satisfy the acceptance criteria as detailed in the HAFB Basewide QAPP (Bhate, 2003a). Unless otherwise noted, all data validated using the methods noted above will be considered suitable for use in meeting the objectives of this study.

6.4.2 Laboratory Analytical Methods

Accutest Laboratories, in Orlando, Florida will be completing all analyses of soil~~,~~ and groundwater~~, and indoor air~~. The soil and~~,~~ groundwater~~, and indoor air~~ samples will be analyzed as follows:

- VOCs by USEPA SW-846 Method 8260B (soil and groundwater)
- SVOCs by USEPA SW-846 Method 8270C (soil and groundwater)
- PCBs by USEPA SW-846 Method 8082 (soil and groundwater)
- TPH (GRO, DRO, ORO) by modified USEPA SW-846 Method 8015B (soil and groundwater)
- TAL Metals by USEPA SW-846 Method 6010B/7470A/7471A (soil and groundwater)
- TDS by USEPA SM18 Method 2540C ~~160.1~~ (groundwater only)
- Moisture content by USEPA SM19 Method 2540B~~160.3M~~ (soil only)
- Dry bulk density by ASTM Method D2937-94 (soil only)
- Specific gravity by ASTM Method D1429-86 (soil only)
- Fractional organic carbon content by ASTM Method D2974-87 (soil only)
- ~~VOCs by USEPA Method TO-15 (indoor air)~~

~~H&P Mobile Geochemistry, in Carlsbad, California will be completing all soil-vapor analysis as follows:~~

- ~~VOCs by USEPA Method TO-15~~

SOPs for the analytical methods are not physically included as part of this Work Plan, however, the SOPs have been reviewed and can be made available by the laboratory

upon request. Table 6-34 presents a summary of sample containers and holding times necessary as per sample media.

The analytical requirements, including preparation methods, analytical methods, and various QA/QC parameters, for soil, soil-vapor, and groundwater samples are summarized in the HAFB Basewide QAPP in:

- Table 3-1 (Project Data Quality Objectives)
- Table 10-1 (Sample Containers, Preservatives, and Holding Times)
- Table 13-1 (Extraction and Digestion Procedures)
- Table 13-2 (Analytical Procedures)

The screening data, definitive data, field sampling summary, and laboratory QC limits for soil, and groundwater, indoor air, and soil-vapor are summarized in the HAFB QAPP Addendum (in Appendix A of this Work Plan) in:

- Table 3-1 (Summary of Screening Data)
- Table 3-2 (Summary of Definitive Data)
- Table 4-1 (Summary of Additional Characterization Field QC Samples)
- Table 4-2 (Summary of Laboratory QC Limits for Soil and Groundwater)
- Table 4-3 (Summary of Laboratory QC Limits for Indoor Air)
- Table 4-4 (Summary of Laboratory QC Limits for Soil-Vapor)

As noted previously, for several compounds, MDLs will be used to meet the respective ARARs. Where concentrations fall between the PQLs and the MDLs, the data will be qualified accordingly.

Samples selected for laboratory analysis will be labeled, handled, and prepared for shipment in accordance with HAFB-SOP-1 of the HAFB Basewide QAPP (Bhate, 2003a). Each cooler containing soil and groundwater samples to be shipped for offsite VOC analysis will require a trip blank. Soil and groundwater samples will be placed on ice and shipped under strict chain-of-custody to Accutest Laboratories in Orlando, Florida. Soil-vapor samples shipped to H&P Mobile Geochemistry, and indoor air samples shipped to Accutest, will also require a trip blank to accompany each respective shipment.

Accutest and H&P Mobile Geochemistry will provide Level II laboratory deliverables which consist of an analytical report with results and QA/QC summaries. Internal QC results, not included as part of the Level II package, will be retained on file at each of the offsite laboratories.

Results for all samples will be presented in hard copy Form-1 and electronic data deliverable (EDD) formats. Electronic data shall be delivered in an appropriate format such that the data can be uploaded to the project database for subsequent manipulation and presentation.

Standard turnaround times of 2 weeks will be expected for all organic and inorganic results.

7 RISK ASSESSMENT APPROACH

The primary objectives of this RFI are to; determine the nature and extent of both soil and groundwater contamination beneath Buildings 231 and 232 resulting from past releases at SWMU 8 (previously removed Building 231 Oil/Water Separator) and to collect sufficient analytical data to support a human health risk assessment. Subsequent to the investigative activities detailed in this Work Plan, a risk assessment will be performed by the Risk Assessment Management (RAM) Group to ensure that the risks to current and future receptors are acceptable at SWMU 8. The risk based evaluation will be included in the submittal of the SWMU 8 RFI Completion Report. The following sections present the various steps that will be included in the risk evaluation. If the completed evaluation indicates an acceptable risk, the site can be considered for closure with no further action. The risk assessment methodology consists of the following steps:

1. Compilation of data;
2. Identification of COPCs;
3. Development of exposure model (EM);
4. Identification of target levels;
5. Calculation of representative concentrations;
6. Calculation of risk ratios; and
7. Uncertainty analysis.

Each of these steps are generally described below.

7.1 Compilation of Data

As a first step in the risk evaluation process, soil and groundwater data produced by this RFI will be combined with all of the available historical data. The data that will be used for the risk assessment will then be identified using the following methodologies:

- Soil and groundwater data collected several years ago may not be used if recent samples (generally from the same areas as the old samples) more representative of current conditions are available.
- Historical soil samples that were located within the boundaries of subsequent excavations will not be used. Therefore, only analytical data collected from

samples outside the excavation area, and sidewall and bottom confirmation samples, representative of any residual impacts will be used.

- Conservatively, data with laboratory qualifiers "B", "Q", and "J" will be considered as detected concentrations.
- TPH results are reported in three fractions (TPH-GRO (C6 – C10), TPH-DRO (C10 – C22), and TPH-ORO (>C22 – C36)). However, the results of two fractions (TPH-DRO and TPH-ORO) will be added as per the *New Mexico Environment Department TPH Screening Guidelines* (NMED, 2006). The two fractions will be added as follows and shown as TPH (C10 – C36):
    - If two fractions contain detectable concentrations, the sum of the two will be taken and considered as detected;
    - If one of the samples contains a detectable concentration, the non-detect concentration will be replaced with ½ the detection limit and sum of the two fractions will be taken and considered as detected; and
    - If the two fractions have concentrations below the detection limits, the sum of ½ the detection limits will be taken and the sample will be considered as non-detect.
- If duplicate samples are collected, the original sample and the duplicate sample will be averaged as follows:
    - If both samples contain detectable concentrations, the average of the two will be taken and considered as detected;
    - If one of the samples contains a detectable concentration and the other is non-detect, the non-detect concentration will be replaced with ½ the detection limit and average of the two will be taken and considered as detected; and
    - If both samples have concentrations below the detection limits, the average of the two detection limits will be taken and the sample will be considered as non-detect.
- If a chemical is reported using two analytical methods (e.g. VOCs and SVOCs [i.e., naphthalene]), these two results will be averaged as per the methodology used for duplicate samples discussed above.

7.2 Identification of COPCs

For risk assessment purposes, all COPCs (VOCs, SVOCs, TPH, TAL metals, and PCBs) that are detected in soil and groundwater samples will be considered and screened based on the following criteria:

- If the maximum detected soil concentrations are less than the NMED's SSLs for residential land use (NMED, 2009), NMED's TPH screening guidelines (NMED, 2006), or the USEPA's RSLs (USEPA, 2009b) for residential land use, these chemicals will not be considered further in the risk assessment.
- For inorganic constituents (e.g., TAL metals) detected in the soil samples, if the maximum detected concentrations are below the HAFB Background, Combined Soil, UTLs (pending NMED approval of the *Basewide Background Study Report, Holloman Air Force Base, New Mexico* [NationView|Bhate JV III, 2009]), these inorganic constituents will not be considered further in the risk assessment.
- If the maximum detected groundwater concentrations are less than the lower of two groundwater standards (i.e., NMWQCC groundwater standards for contaminants [NMAC 20.6.2.3103] and the USEPA's National Primary Drinking Water Regulations MCLs [USEPA, 2009a]), these chemicals will not be considered further in the risk assessment.
- For inorganic constituents (e.g., TAL metals) detected in the groundwater samples, if the maximum detected concentrations are below the HAFB Background, Dissolved Metals, Groundwater UTLs (pending NMED approval of the *Basewide Background Study Report, Holloman Air Force Base, New Mexico* [NationView|Bhate JV III, 2009]), these constituents will not be considered further in the risk assessment.

Identification of COPCs for the risk assessment will be completed after the compilation of data collected during the SWMU 8 RFI.

7.3 Development of the Exposure Model

Following a review of available data, the CSM may need to be revised. This includes (i) re-assessing the distribution of COCs in soil and groundwater, (ii) verifying current and future land use, (iii) verifying site stratigraphy and hydrogeology, and (iv) verifying that sufficient amount of data is available to adequately delineate the impacts and perform a risk assessment.

Once the conceptual site model has been refined, an exposure model will be developed. The exposure model is based on the CSM, and identifies the following:

- Media of concern
- Current and future receptors based on current and future land use, respectively
- Complete and incomplete exposure pathways

The media of concern includes surficial soil, subsurface soil, soil to depth of construction, and groundwater. Based on current information available for SWMU 8, receptors include (i) a current commercial/industrial worker, (ii) a future resident, and (iii)

a future construction worker. Complete routes of exposure for each media of concern/COC/receptor combination will be identified and documented based on the above information.

7.4 Identification of Target Levels

For the complete exposure pathways identified per the CSM, target levels will be obtained or calculated as per the following sources:

- **Ingestion of, dermal contact with, and inhalation of vapors/particulates from soil:** If this pathway is complete, the target levels will be obtained from the following sources:

  - NMED, 2009. *Technical Background Document for Development of Soil Screening Levels, Revision 5.0*
  - NMED, 2006. *NMED TPH Screening Guidelines*
  - USEPA, 2009b. *Regional Screening Levels (RSLs) Table*

  For the constituents for which target levels are not available in the above sources, target levels will be calculated using the methodology included in the above sources.

  For the COPCs with both carcinogenic and non-carcinogenic adverse health effects, target levels are required for both carcinogenic and non-carcinogenic effects to evaluate the cumulative effects. The above sources present a minimum of two target levels for both cumulative effects. Therefore, the higher of two target levels for each cumulative effect, will also be calculated as per the methodology included in the above sources.

- **Indoor inhalation of vapors from subsurface soil and groundwater:** If this pathway is complete, the Johnson & Ettinger (J&E) model (USEPA, 2004a) will be used to develop the target levels for volatile COPCs in subsurface soil and groundwater. The use of the J&E model is necessary because the NMED SSLs document (NMED, 2009) and the USEPA RSLs (USEPA, 2009b) do not have the indoor inhalation pathway. When the J&E model is used, the most current inhalation toxicity values will be used. Further all exposure factors and physical chemical properties will be revised to be consistent with NMED guidance.

- **Dermal contact with groundwater:** If this exposure pathway is complete, the target levels for dermal contact with groundwater will be developed as per the *Risk Assessment Guidance for Superfund (RAGS) Volume I, Part E Supplemental Guidance for Dermal Risk Assessment* (USEPA, 2004b).

- **Outdoor inhalation of vapors from groundwater:** If this exposure pathway is complete, the target levels of volatile COPCs in groundwater will be developed as per the *Standard Guide for Risk-Based Corrective Action Applied at Petroleum Release Sites* (ASTM, 1995).

To calculate the target levels, the following parameters are required:

- Toxicity values
- Physical and chemical properties
- Exposure Factors
- Fate and Transport Parameters

Each of above parameters is discussed below.

7.4.1 Toxicity Values

The toxicity of a chemical for carcinogenic adverse health effects is quantified using a slope factor for ingestion and dermal contact pathways and unit risk factor for inhalation pathway. (Note that unit risk factor can be converted to an inhalation slope factor.) For chemicals that cause non-carcinogenic adverse health effects, toxicity is quantified by reference dose for ingestion and dermal contact pathways and reference concentrations for inhalation pathways. Note that reference concentration can be converted to an inhalation reference dose.

As per the *Technical Background Document for Development of Soil Screening Levels, Revision 5.0* (NMED, 2009), most current toxicity values will be used and obtained from the following sources:

- USEPA, 2009c, Integrated Risk Information System (IRIS)
- USEPA, 2006, Provisional Peer Reviewed Toxicity Values (PPRTVs)
- Agency for Toxic Substances and Disease Registry (ATSDR), 2008, Minimal Risk Levels (MRLs)
- California Environmental Protection Agency (CalEPA), 2009, Office of Environmental Health Hazard Assessment (OEHHA)
- USEPA, 2001, Health Effects Assessment Summary Tables (HEAST)

For dermal contact pathways, slope factor and reference dose will be calculated as per the *Risk Assessment Guidance for Superfund (RAGS) Volume I, Part E Supplemental Guidance for Dermal Risk Assessment* (USEPA, 2004b):

$$SF_d = \frac{SF_o}{ABS_{GI}} \qquad (7\text{-}1)$$

$$RfD_d = RfD_o \times ABS_{GI} \quad (7\text{-}2)$$

where:

SF_o	=	Slope factor for oral exposure $(mg/kg\text{-}day)^{-1}$
RfD_o	=	Reference dose for oral exposure (mg/kg-day)
SF_d	=	Slope factor for dermal exposure $(mg/kg\text{-}day)^{-1}$
RfD_d	=	Reference dose for dermal exposure (mg/kg-day)
ABS_{GI}	=	Fraction of contaminants absorbed in gastrointestinal tract (dimensionless)

The dermal absorption fractions will be obtained from the RSL Table (USEPA, 2009b). The fractions of chemicals absorbed in the gastrointestinal tract are not readily available. However, the Texas Commission on Environmental Quality (TCEQ) has compiled a comprehensive list of these values (TCEQ, 2009) and these values will be used.

7.4.2 Physical and Chemical Properties

The chemical-specific physical and chemical properties required are water solubility, Henry's law constant, organic carbon adsorption coefficient, diffusion coefficient in air, and diffusion coefficient in water. The chemical-specific physical and chemical properties will be obtained from the following sources:

- NMED, 2009, *Technical Background Document for Development of Soil Screening Levels, Revision 5.0*
- USEPA, 2009b, Regional Screening Levels Table
- USEPA, Spreadsheet Implementation of the J&E Model
- TCEQ, 2009, Texas Risk Reduction Program (TRRP) Rule Tables

For metals, additionally the pH of the groundwater (field parameter) will be required.

7.4.3 Exposure Factors

The exposure factors will be obtained from the *Technical Background Document for Development of Soil Screening Levels, Revision 5.0* (NMED, 2009). If the values are not available from the NMED (2009), other sources will be used. Other sources include, but are not limited to:

- USPEA, 1989a, Risk Assessment Guidance for Superfund: Volume I - Human Health Evaluation Manual, Part A
- USEPA, 1989b, Risk Assessment Guidance for Superfund: Volume I – Human Health Evaluation Manual, Part B
- USEPA, 1998, Exposure Factors Handbook Volume 1 – General Factors

- USEPA, 2004b, *Risk Assessment Guidance for Superfund (RAGS) Volume I, Part E Supplemental Guidance for Dermal Risk Assessment*

7.4.4 Fate and Transport Parameters

As described in Section 6.2.2.1, site-specific geotechnical parameters will be obtained from two geotechnical soil samples collected from SWMU 8 during this RFI and these parameter values will be used. For other parameters, site-specific data will be used wherever available. In the absence of site-specific data, conservative values based on literature or professional judgment will be used.

7.5 Calculation of Representative Concentrations

In order to evaluate risks of complete exposure pathways by the receptor of concern, the representative concentrations are required for each complete exposure pathway-receptor combination. The representative concentration is the average concentration to which the receptor is exposed over the specified exposure duration, within a specified geographical area, and for a specific exposure pathway. In most risk assessments, the exposure point concentration is assumed constant over the exposure duration. The calculation of risks involves many assumptions, most of which result in an overestimate of risk. A few relevant assumptions are:

1. Typically a receptor's exposure time is several years (e.g., 6 years for a resident child, 30 years for a resident adult, 25 years for a commercial/industrial worker, etc.).

2. Typically exposure occurs over an "area" of the site, not at one single point. The area of the site that contributes to chemical exposure is referred to as the exposure domain.

3. Typically fate and transport models are used to quantify the migration of chemicals. Examples include Domenico's model (Domenico and Schwartz, 1990) or Johnson and Ettinger's model. These models assume a "uniform" or average concentration over the exposure domain.

4. Typically environmental samples are biased high in that more samples are collected from the source areas and less from the areas outside the source. The concept of 95% Upper Confidence Limit (UCL) is statistically more appropriate for random samples collected over the exposure domain.

When estimating the representative concentrations, it is important to keep in mind the above assumptions. The implications of each of these are discussed below:

Assumption 1: The receptors are unlikely to spend the entire duration in one spot. Instead the receptors are going to be exposed to chemicals over the entire exposure domain. Therefore, it is overly conservative to use the 95% UCL. Rather average concentrations over the exposure domain should be used.

Assumption 2: Since exposure occurs over the entire exposure domain, the sampling should be designed to cover/characterize the entire exposure domain. In general, multiple samples to characterize the entire exposure domain are collected.

Assumption 3: The mass balance assumptions inherent in the models assume that the risks are based on an average concentration over the entire exposure domain. Therefore, it is overly conservative to use the 95% UCL or maximum concentrations. Rather average concentrations over the exposure domain should be used.

Based on the above, the correct application of risk-based corrective action requires that average concentration over the exposure domain be used to calculate risks. Further, it is believed that the use of the 95% UCL or maximum concentration is overly conservative in the risk-based process, and should be avoided.

There is considerable regulatory concern whether the average concentration has been "artificially diluted" by taking only a few samples in the impacted area and a large number of samples in the uncontaminated area.

However, to avoid this circumstance, some states require that the maximum concentration over the exposure domain should also be compared with the representative concentrations. If the maximum concentration exceeds 10 times the representative concentration, possible reasons for an exceedance could be:

- The maximum concentration is an outlier,
- The average concentration was inaccurately calculated,
- The area of impact is not adequately characterized, or
- A hot spot may not have been adequately characterized.

The use of the 95% UCL to get an upper limit of the true average as opposed to the sample average is also very common. However, one of the underlying assumptions in the calculations of the UCLs is random sampling and a sufficiently large data set. These assumptions are often not valid within an exposure domain.

In general, representative concentrations for each COPC and each pathway-receptor combination will be estimated using the following methodology:

- Surficial soil will be assumed to be soil collected between 0 – 2 ft bgs.
- Subsurface soil will be represented by soil samples collected from 2 ft bgs to the water table.

- For the construction worker, representative concentrations of soil up to the depth of construction, i.e., samples collected between 0 – 10 ft bgs will be used.
- Non-detect concentrations will be replaced with half the detection limit for the calculation of representative concentrations.
- Representative concentrations will be based on the arithmetic average concentrations.
- To avoid unintentional "dilution" of the average, non-detect concentrations located on the periphery of the exposure domain will not be included.

7.6 Calculation of Risk Ratios

Using the target levels identified above and the representative concentrations calculated from the above steps, the following risk ratios will be calculated as per the *Technical Background Document for Development of Soil Screening Levels, Revision 5.0* (NMED, 2009):

- Site risk for carcinogens
- Hazard index for non-carcinogens

Risk ratios will be calculated for each receptor of concern and for each complete exposure pathways and each COPC.

If the calculated site risk is less than the target risk level of 1×10^{-5} or if the calculated site hazard index is less than one, the site can be considered for closure with no further action.

If the calculated site risk is greater than the target risk level of 1×10^{-5} or if the calculated site hazard index is greater than one, further site specific evaluation will be conducted. The target levels identified from the above step can be used as clean-up levels.

7.7 Uncertainty Analysis

As in any risk assessment, the evaluation contains several assumptions that are sources of uncertainties. In general, the sources of uncertainty are related to the following:

- Site characterization
- Constituents of concern
- Representative concentrations
- Exposure evaluation
- Toxicity values
- Physical and chemical properties

- Fate and transport parameters
- Fate and transport models

As appropriate, the sources of uncertainty will be discussed. Specifically, uncertainties of risks for the COPCs that are not included in the *Technical Background Document for Development of Soil Screening Levels, Revision 5.0* (NMED, 2009) and the *USEPA's Regional Screening Levels Table* (USEPA, 2009b) will be addressed.

~~7~~8 DATA MANAGEMENT PLAN

This section describes the overall data management strategy and plan for the SWMU 8 RFI Work Plan.

~~7.1~~8.1 Data Management Strategy

The data management plan will be used to accommodate and manage fixed-based laboratory generated data at standard turnaround time (2 weeks). Data to be generated includes chemical analytical data, as well as spatial and features information, hydrogeologic data, and various supporting data, such as photographs and standard daily forms information.

~~7.2~~8.2 Data Type

Analytical data will be generated by onsite field screening, as well as by offsite laboratory analysis. Field screening data generated during this RFI will be managed by the NationView report development team, and incorporated into the SWMU 8 Completion Report. Analytical data generated by the offsite laboratory will be initially managed by the respective laboratory's laboratory information management system (LIMS) and transferred to the project team for use via EDD and hard copy. Prior to project startup, formats for the offsite laboratory EDDs will be final approved to ensure smooth transfer and importation of the data into the NationView project database upon receipt.

Upon project completion, the data management system will be used to perform final spatial analysis, as well as to support tabular and graphic report development for deliverables and miscellaneous project communications as needed.

~~7.2.1~~8.2.1 Sample Identification System

Each environmental, geotechnical, and QA/QC sample collected will be identified on the sample label and chain-of-custody records, regardless of type. Sample documentation, handling, and shipping will be in accordance with HAFB-SOP-1 of the Basewide QAPP (Bhate 2003a). Table 6-34 provides the sample collection information inclusive of the container type, holding time, and quantity for the soil and~~,~~ groundwater~~, soil-vapor, and indoor air~~ samples to be collected during the investigation at SWMU 8. The field duplicate samples will appear in sequence with the other samples.

The sample nomenclature for soil samples collected from DPT boreholes will be as follows:

SWMU-8-DP05-10-a

Site alpha-numeric identifier: SWMU-8 = Solid Waste Management Unit 8
Sample type identifier: DP = direct push boring
Sequential direct push boring number: 04, 05, etc.
Ending depth of sample interval: 10
Reserved for quality assurance (QA) sample identifiers: a = field duplicate, TB = trip blank, MS = matrix spike, MSD = matrix spike duplicate

The sample identification nomenclature for groundwater samples collected from monitoring wells will be as follows:

SWMU-8-DP01-a

Site alpha-numeric identifier: SWMU-8 = Solid Waste Management Unit 8
Sample type identifier: DP = existing monitoring well nomenclature
Sequential monitoring well number: 01, 02, etc.
Reserved for QA sample identifiers: a = field duplicate, TB = trip blank, MS = matrix spike, MSD = matrix spike duplicate

~~The sample nomenclature for soil-vapor samples collected from below Building 231 and 232 will be as follows:~~

~~SWMU-8-SV01-a~~

~~Site alpha-numeric identifier: SWMU-8 = Solid Waste Management Unit 8~~
~~Sample type identifier: SV = soil-vapor~~
~~Sequential sample number: 02, 03, etc.~~
~~Reserved for QA sample identifiers: a = field duplicate, TB = trip blank, MS = matrix spike, MSD = matrix spike duplicate~~

~~The sample nomenclature for indoor air samples collected from inside Building 231 and 232 will be as follows:~~

~~SWMU-8-IA-231~~

~~Site alpha-numeric identifier: SWMU-8 = Solid Waste Management Unit 8~~
~~Sample type identifier: IA = indoor air~~
~~Building number: 231, 232~~
~~Reserved for QA sample identifiers: a = field duplicate, TB = trip blank, MS = matrix spike, MSD = matrix spike duplicate~~

~~7.2.2~~8.2.2 Data Recording

The following paragraphs describe the data recording activities that will be performed for field data, offsite and onsite laboratory analytical data, and photographs.

~~7.2.2.1~~8.2.2.1 Field Data

All information pertinent to a field and/or sampling survey will be recorded on appropriate data sheets, or in the project field logbook as described in Section 10.5 of the HAFB Basewide QAPP (Bhate, 2003a). Specific data sheets are required by certain SOPs. Samplers use a bound field logbook with consecutively numbered pages. Entries in the logbook will be made using indelible ink and will include at a minimum the following information:

- Name and address of the field contact (on logbook cover)
- Date of entry
- Names and companies of personnel on site
- General descriptions of each day's field activities
- Documentation of weather conditions during field activities
- Location of sampling (e.g., monitoring well)
- Data points for field equipment derived during calibration procedures
- Observation of sample or collection environment
- Identification of sampling device
- Any field measurements made
- Sequence of collection of environmental samples
- Type of sample matrix (e.g., soil, groundwater~~, soil-vapor, etc.~~)
- Date and time of environmental sample collection
- Field sample identification number
- Sample distribution (e.g., which laboratory shipped to for analysis)
- Sampler's name
- Sample type (e.g., composite, normal, duplicate, other QC, etc.)
- For groundwater samples, which samples were filtered if any and filter size and type
- Preservative used, if applicable, for the environmental sample

If an error is made on the document or in the logbook, corrections will be made simply by crossing a line through the error in such a manner that the original entry can still be read, and the correct information added as the change. All corrections will be initialed by the author and dated.

Each page in the logbook will be signed or initialed by the person making the entries. In addition to the information entered into the logbook, the appropriate data forms must be filled out as each activity is completed~~ (see forms in Attachment C of this Work Plan)~~.

~~7.2.2.2~~8.2.2.2 Laboratory Analytical Data

The offsite laboratory shall maintain electronic and hardcopy records sufficient to recreate each analytical event conducted. The minimum records the laboratory shall keep include the following:

- Chain-of-custody forms
- Initial and continuing calibration records including standards preparation traceable to the original material and lot number
- Instrument tuning records (as applicable)
- Method blank results
- Internal standard results
- Surrogate spiking records and results (as applicable)
- Spike and spike duplicate records and results
- Laboratory records
- Raw data, including instrument printouts, bench work sheets, and/or chromatograms with compound identification and quantitation reports
- Corrective action reports
- Other method and project required QC samples and results
- Laboratory-specific written SOPs for each analytical method and QA/QC function in place at the time of project sample analysis

~~7.2.2.3~~8.2.2.3 Photographs

Any photographic documentation will be recorded in the appropriate logbook. Information to be recorded includes:

- Camera make and model
- Time and date
- Photographer
- Details for the location of the photograph
- Direction of photograph, preferably measured with field compass
- Subject of the photograph
- Significant or relevant features
- Names of any personnel included in photograph

~~7.3~~8.3 Data Reporting

Data obtained during drilling activities will be reported according to the Basewide QAPP (Bhate, 2003a). In accordance with USACE *Chemical Quality Assurance for HTRW Projects Manual* EM 200-1-6, October 1997, the investigative data is classified as definitive data. The data will be generated using rigorous, analyte-specific analytical methods where analyte identifiers and quantitations are confirmed and QA/QC requirements have been satisfied. For this project, regular, field duplicate, and MS/MSD samples are to be collected concurrently. The data will meet the objectives of the project for level of accuracy and precision required, intended use of the data, analytical methods, time constraints, and allowable decision errors. Risk evaluation and sampling results will be tabulated and summarized in the RFI report for the site. An Environmental ~~Resources~~ Restoration Program Information Management System (ERPIMS) submittal is not required for this RFI at SWMU 8.

~~7.3.1~~8.3.1 Tabular Displays

All analytical chemistry data will be presented as either Form 1 reports and/or summary reports. The Form 1 analytical reports will contain the following:

- Laboratory Name, address, telephone number, contact person, and location where the test was carried out if different from the fixed laboratory address
- Unique Laboratory Project Number
- Total number of pages (report must be paginated)
- Client Project Number (if applicable)
- Laboratory Sample Identification (if applicable)
- Client Sample Identification
- Test Method
- Matrix and/or description of sample
- Dates: sample collection, collection time, sample receipt, preparation, and/or analysis date
- Definition of data qualifiers
- Reporting units
- Solid samples: indicate dry or wet weight
- Indication by flagging where results are reported below the quantitation limit

Laboratories shall provide data deliverables within the standard time specified. Analytical results for all samples will be presented in hard copy Form-1 and EDD formats. Electronic data shall be delivered in an appropriate format such that the data can be uploaded to the project database for subsequent manipulation and presentation.

Tabular summary reports listing of non-chemical, field measurement data will also be generated as part of this project. These summary reports will be created on an as-needed basis to support field sampling efforts and/or final project reporting.

~~7.3.2~~8.3.2 Graphical Displays

During the field effort, Figures 6-1~~,~~ and 6-2~~, 6-3, and 6-4~~ will be used by the field teams to guide their sampling activities. Field technicians will hand-annotate these maps for interim documentation of notable spatial information, such as:

- Indicating which locations have been sampled
- Documenting in-field sample location adjustments
- Location of underground and overhead utilities

The NationView report development team will perform data input and changes, as well as generate requested graphical and tabular reporting documents. Creation of presentation quality maps, as well as complex map layouts, and other complex displays, analysis, and processing of spatial data, will be performed using desktop geographic~~global~~ information system (GIS) software (such as Environmental Systems

Research Institute's [ESRI's] ArcGIS program suite). The desktop GIS software will be used to produce maps intended for use in reports.

~~7.4~~8.4 Data Archiving

Hardcopy and electronic data shall be archived in project files and on electronic archive media for the duration of the project and for a minimum of 5 years, whichever is longer.

This page intentionally left blank.

~~8~~9 HEALTH AND SAFETY REQUIREMENTS

Project Health and Safety practices will adhere to the *Basewide Health and Safety Plan* (Bhate, 2003b) and the Site Specific Addendum to the Basewide HASP, as included in Appendix D of this Work Plan for investigation activities. All work must be conducted in accordance with the USACE *Safety and Health Requirements Manual, EM 385-1-1*, 15~~3~~ September~~November~~, ~~2003~~2008. It is anticipated that no greater than level D PPE will be required to complete the site sampling activities. This includes: Occupational Safety and Health Administration (OSHA) approved safety shoes, American National Standards Institute (ANSI) approved safety glasses (Z87.1) and hard hat (Z89.1-1997: Type I), sleeved shirt and long pants, and as required, hearing protection, leather work gloves, and/or nitrile gloves during sampling.

Site security is part of safety at the site for the investigation. Items of concern include the proper designation and demarcation of the investigation boundaries (i.e., Support Zone, Contaminant Reduction Zone, and Exclusion Zone) as appropriate. Likewise, compliance with any intrusive work requirements, posting of potential hazards, and control of un-authorized site personnel will be completed. This is discussed in the Basewide HASP (Bhate, 2003b).

At a minimum, the site will be secured with caution tape surrounding the perimeter of the site delineating the outer boundary of the Support Zone. This is essential in the utility clearance process and it will serve as the demarcation of the site for both project and non-project persons. A Contaminant Reduction Zone and/or Exclusion Zone will be established as guided by the HASP and site prevailing conditions.

This page intentionally left blank.

~~9~~10 PROJECT MANAGEMENT PLAN AND SCHEDULE OF IMPLEMENTATION

This section presents the PMP to be used during the performance of the SWMU 8 RFI.

~~9.1~~10.1 Management Control Structure

During the implementation of the field activities for the SWMU 8 RFI, Mr. ~~Dustin McNeil~~John Hymer will serve as the NationView Site Manager~~, Project Geologist,~~ and Site Safety and Health Officer (SSHO), Mr. Dustin McNeil will serve as the Project Geologist, overseeing and directing all investigation sampling activities~~. Mr. McNeil will also~~ and providing~~e~~ on-site management of any sub-contractors for the project. Mr. Jim Moore will serve as the Senior Geologist and Field Team Leader for this project. Mr. Frank Gardner will serve as the NationView Project Manager. Mr. David Martin is the NationView Corporate Sponsor and will ensure required project documents, permits, contractual agreements, and other program tasks are completed. Key project personnel and their responsibilities are listed in Table 10~~9~~-1. The investigation activities are anticipated to begin in the spring of 2010~~09~~ and will last approximately 10 days.

~~9.2~~10.2 Reporting

A variety of report mechanisms will be utilized throughout the SWMU 8 RFI to facilitate communication between HAFB, USACE, NMED, and Contractors. These reports will include the standard quality control and progress reports outlined in the HAFB Basewide QAPP (Bhate, 2003a), as well as the Draft and Final SWMU 8 RFI Reports. These reports will be instrumental in maintaining and documenting the continuing communication between various entities involved in the project.

A Draft SWMU 8 RFI Report will be prepared and undergo a series of internal reviews by NationView prior to submission to USACE Albuquerque District, as the agency service provider, prior to revision and submission to NMED for review. Upon receipt of NMED comments, the Draft SWMU 8 RFI Report will be revised to Final format accordingly. As needed, a meeting may be requested to address any issues of significance that are not readily resolved through standard revision-level processes. The NationView Team will be responsible for resolving any issues that rise to that level of discourse.

Specifically, the SWMU 8 RFI Report(s) will include the following elements:

- Introduction
- Environmental Setting
- Source Characterization

- Sampling and Analysis Results
- Data Quality Assurance/Data Quality Control Review
- Risk Based Evaluation
- Conclusions
- Recommendations

~~9.3~~10.3 Records Management

Project files will contain the following information:

- Correspondence
  - ~~a.~~ External and internal correspondence
  - ~~b.~~ Personnel, organization, and responsibilities
  - ~~c.~~ Planning and scheduling
  - ~~d.~~ QA auditing and inspection reports
- All Field Generated Data
- Contractual Documentation
  - ~~a.~~ Prime Contract
  - ~~b.~~ Delivery Orders / Task Orders
  - ~~c.~~ Change Orders
  - ~~d.~~ Subcontracts
  - ~~e.~~ Competitive bid evaluations
- Laboratory Analytical Data
- Submittals/Reports
- Miscellaneous project information as required

Project files will be maintained by Project Management and Quality Assurance personnel, as supported by designated document control personnel.

~~10~~11 REFERENCES

Agency for Toxic Substances and Disease Registry (ATSDR). December 2008. Minimal Risk Levels.

American Society for Testing and Materials (ASTM). 1995. *Standard Guide for RBCA Applied at Petroleum Release Sites.*

ASTM. May 2006a. *ASTM D 2487-92 Standard Practice for Classification of Soils for Engineering Purposes (Unified Soil Classification System)*.

ASTM. November 2006b. *ASTM D 2488-90 Standard Practice for Description and Identification of Soils (Visual-Manual Procedure).*

Associated Press. 2006. *Groups File Suit Over Endangered Falcon Protections*.

A.T. Kearney, Inc., and DPRA, Inc. September 1988. *RCRA Facility Assessment Preliminary Review/ Visual Site Inspection Report.*

Bhate Environmental Associates, Inc. (Bhate). November 2003a. *Final Basewide Quality Assurance Project Plan, Holloman Air Force Base, New Mexico*.

Bhate. December 2003b. *Final Basewide Health and Safety Plan, Holloman Air Force Base, Alamogordo, New Mexico*.

Bhate. December 2005. *Draft Voluntary Corrective Measures Work Plan SWMU 8 Soil Remediation, Holloman Air Force Base, New Mexico*.

Bhate. January 2006a. *Final Environmental Assessment, Wastewater Utility System Privatization, Holloman Air Force Base, New Mexico.*

Bhate. May ~~2006a~~2006b. *Memorandum Scope of Work for Soil and Groundwater Sampling and Analysis, Holloman Air Force Base, New Mexico.*

Bhate. August ~~2006b~~2006c. *Technical Memorandum Letter Report for SWMU 8 Soil and Groundwater Sampling and Analysis, Holloman Air Force Base, New Mexico*.

Bhate. October 2008. *Final Voluntary Corrective Action Measures Work Plan SWMU 8 Soil Remediation, Holloman Air Force Base, New Mexico.*

California Environmental Protection Agency (CalEPA). July 2009. Office of Environmental Health Hazard Assessment (OEHHA). http://oehha.ca.gov/risk/ChemicalDB/index.asp.

Domenico, P.A., and Schwartz, F.W. 1990. Physical and Chemical Hydrogeology. John Wiley and Sons, NY, p. 824.

EBASCO Services, Inc., and Groundwater Technology Government Services, Inc. November 1995. *Closure Report for Remediation of POL – Contaminated Sites and Oil/Water Separator Removals, Holloman Air Force Base, New Mexico, July – November 1995.*

Foster Wheeler Environmental Corporation (FWENC) and Groundwater Technology Government Services, Inc. July-November 1995. *Closure Report Addendum for Remediation of POL-Contaminated Sites and Oil/Water Separator Removals, Holloman Air Force Base, New Mexico*.

FWENC. December 1997. *Final Closure Report Addendum for Phase II Remediation of POL-Contaminated Sites and Oil/Water Separator and Waste Oil Tank Removals, Holloman Air Force Base, New Mexico*.

Freehling, M., K. Johnson, and L. DeLay. 1999. *Shorebird foraging and invertebrate occurrence at the Holloman Wetlands, Holloman Air Force Base, 1996-1998*. New Mexico Natural Heritage Program, Biology Department, University of New Mexico, September 9, 1999.

Frey, J. K. and T. L. Yates. 1996. *Mammalian Diversity in New Mexico*. New Mexico Journal of Science, Vol. 36: 4-37.

Geoprobe Systems®. November 2006a. *Geoprobe® DT325 Dual Tube Sampling System Standard Operating Procedure Technical Bulletin No. MK3138.*

Geoprobe Systems®. November 2006b. *Geoprobe® Macro-Core® MC5 1.25-Inch Light-Weight Center Rod Soil Sampling System Standard Operating Procedure Technical Bulletin No. MK3139.*

Groundwater Technology Government Services, Inc. February 29, 1996. *Additional Characterization of POL-Contaminated Sites SWMU-3, SWMU-8, SWMU-36, SWMU-123 and OT-44, Holloman Air Force Base, New Mexico.*

~~H&P Mobile Geochemistry. October 2004. *Sub-Slab Soil Vapor Standard Operating Procedures (For Vapor Intrusion Applications).*~~

Johnson, K., K. Score, S. Berckman, J. S. Altenbach, and P. Mehlhop. 1997a. *A survey of biological resources at the Cinetheodolite Missile Towers on Holloman Air Force Base and White Sands Missile Range, New Mexico*. New Mexico Natural Heritage Program, Biology Department, University of New Mexico, Albuquerque, New Mexico, November 7, 1997.

Johnson, K., L. DeLay, P. Mehlhop, and K. Score. 1997b. *Distribution, Habitat, and Reproductive Success of Burrowing Owls on Holloman Air Force Base, New Mexico*. New Mexico Natural Heritage Program, Biology Department, University of New Mexico, July 31, 1997.

Mehlhop, P., N.M. Runyan, E. DeBruin, J.M. Brown-Ellington, and E. Milford. 1998. *Sensitive Species Management Plans for Holloman Air Force Base*.

NationView|Bhate JV III. October 2009. *Basewide Background Study, Holloman Air Force Base, New Mexico.*

New Mexico Administrative Code (NMAC) 19.33.6, *List of Threatened and Endangered Species*, November 30, 2000. (http://www.nmcpr.state.nm.us/nmac/parts/title19/19.033.0006.pdf).

NMAC 20.6.2.3103, New Mexico Water Quality Control Commission Regulations, September 15, 2002. (http://nmenv.state.nm.us/NMED_Regs/gwb/20_6_2.NMAC.pdf).

New Mexico Environment Department (NMED). February 2004a. Appendix 4-B RCRA Facility Investigation (RFI) Outline, Holloman Air Force Base, Hazardous Waste Facility Permit No. NM6572124422.

NMED. February 2004b. Appendix 4-F: *Action Levels and Cleanup Levels*, Holloman Air Force Base, Hazardous Waste Facility Permit No. NM6572124422.

~~NMED, June 2006a. *New Mexico Environmental Department Technical Background Document for Development of Soil Screening Levels*.~~

NMED. October 2006~~b~~. *New Mexico Environmental Department TPH Screening Guidelines*.

NMED. July 2008. *Guidance for Assessing Ecological Risk Posed by Chemicals: Screening-Level Ecological Risk Assessment, Revision 2.0.*

NMED. December 2009. *Technical Background Document for Development of Soil Screening Levels, Revision 5.0.*

New Mexico Water Rights Reporting System (NMWRRS) database. June 2009. (http://nmwrrs.ose.state.nm.us/WRDispatcher?page=meterDrillerSelection).

Pittenger, J.S. and C.L. Springer. 1999. *Native Range and Conservation of the White Sands Pupfish (Cyprindon tularosa).* Southwestern Naturalist 44(2):157-165.

Radian Corporation. November 1993. *Draft Holloman Risk Assessments: Sewage Lagoons and Lakes Investigation, Volume- Report*.

Root, J. and S. Demarais. 1997. Small Mammal Projects Conducted on Holloman Air Force Base.

Suminski, R.R. 1977. *Life History of the White Sands Pupfish and Distribution of Cyprinodon in New Mexico*.

Texas Commission on Environmental Quality (TCEQ). 2009. Texas Risk Reduction Rules Tables.

The Nature Conservancy. 2007. *The Unlucky 13 Grassland Birds.* www.nature.org.

The Owl Pages. 2005. www.theowlpages.com.

Turner, P.R. 1987. *Ecology and Management Needs of the White Sands Pupfish in the Tularosa Basin of New Mexico*.

U.S. Air Force. 1996. *Delineations of Jurisdictional Waters of the United States and Wetlands on Holloman Air Force Base, New Mexico*. U.S. Army Corps of Engineers, Fort Worth District, Fort Worth, Texas.

U.S. Army Corps of Engineers. October 10, 1997. *Chemical Quality Assurance for HTRW Projects Manual* EM 200-1-6.

U.S. Army Corps of Engineers. January 2001. *Holloman Air Force Base Integrated Natural Resource Management Plan.*

U.S. Army Corps of Engineers, Albuquerque. June 3, 2008. *Scope of Work Holloman Air Force Base RCRA Facility Investigations (RFIs) at SWMU 8, SWMU 122, and SWMU 183, Contract No. W912PL-07-D-0050 Task Order #DM01.*

U.S. Army Corps of Engineers. ~~November 3, 2003~~September 15, 2008. *Safety and Health Requirements Manual, EM 385-1-1*.

United States Department of Agriculture (USDA). 1981. *Soil Survey of Otero Area, New Mexico: Parts of Otero, Eddy, and Chaves Counties.*

U.S. Department of Interior, U.S. Fish and Wildlife Service. 1996. Endangered and threatened wildlife and plants 50 Code of Federal Regulations (CFR) §17.11 and §17.12.

United States Environmental Protection Agency (USEPA). November 1986. *Guidelines for Ground-water Classification Under the EPA Ground-water Protection Strategy.*

USEPA. 1989a. Risk Assessment Guidance for Superfund: Volume I – Human Health Evaluation Manual, Part A.

USEPA. 1989b. Risk Assessment Guidance for Superfund: Volume I – Human Health Evaluation Manual, Part B.

~~United States Environmental Protection Agency (USEPA), 1995. *Drinking Water Regulations and Health Advisories.*~~

USEPA-New England Region I. December 1996. *Data Validation Functional Guidelines for Evaluating Environmental Analyses*. USEPA-New England Region I Quality Assurance Unit Staff Office of Environmental Measurement and Evaluation.

USEPA. 1998. Exposure Factors Handbook Volume 1 – General Factors.

USEPA. 2001. Health Effects Assessment Summary Tables (HEAST).

~~USEPA, October 1999. *Contract Laboratory Program National Functional Guidelines for Organic Data Review*. Office of Emergency and Remedial Response, US Environmental Protection Agency Washington DC.~~

~~USEPA, November 2002. *OSWER Draft Guidance for Evaluating the Vapor Intrusion to Indoor Air Pathway from Groundwater and Soils (Subsurface Vapor Intrusion Guidance).*~~

USEPA. February 2004a. *User's Guide for Evaluating Subsurface Vapor Intrusion into Buildings.*

USEPA. July 2004b. *Risk Assessment Guidance for Superfund Volume I, Part E Supplemental Guidance for Dermal Risk Assessment.*

USEPA. October 2004c. *Contract Laboratory Program National Functional Guidelines for Inorganic Data Review*. Office of Emergency and Remedial Response, US Environmental Protection Agency Washington DC.

USEPA. May 10, 2006. Provisional Peer Reviewed Toxicity Values. http://hhpprtv.ornl.gov/index.shtml.

USEPA. June 2008. *Contract Laboratory Program National Functional Guidelines for Superfund Organic Methods Data Review* (USEPA-540-R-08-01). Office of Superfund Remediation and Technology Innovation, US Environmental Protection Agency Washington, DC.

USEPA. May 2009a. *National Primary Drinking Water Regulations* (EPA 816-F-09-004).

USEPA. December 2009b. *USEPA Regions 3, 6, and 9 Regional Screening Levels.* http://www.epa.gov/Region6/6pd/rcra_c/pd-n/screen.htm.

USEPA. 2009c. Integrated Risk Information System. http://www.epa.gov/iris/.

Western Regional Climate Center (WRCC). 2003. http://www.wrcc.dri.edu/.

Additional documents reviewed but not cited:

~~DiGiulio, D. March, 2007. *A Conceptual Understanding of Leaking During Soil Gas Sampling.*~~

Geoprobe Systems®. 2003. *Geoprobe® Systems Tools Catalog Vol. 6.*

FIGURES

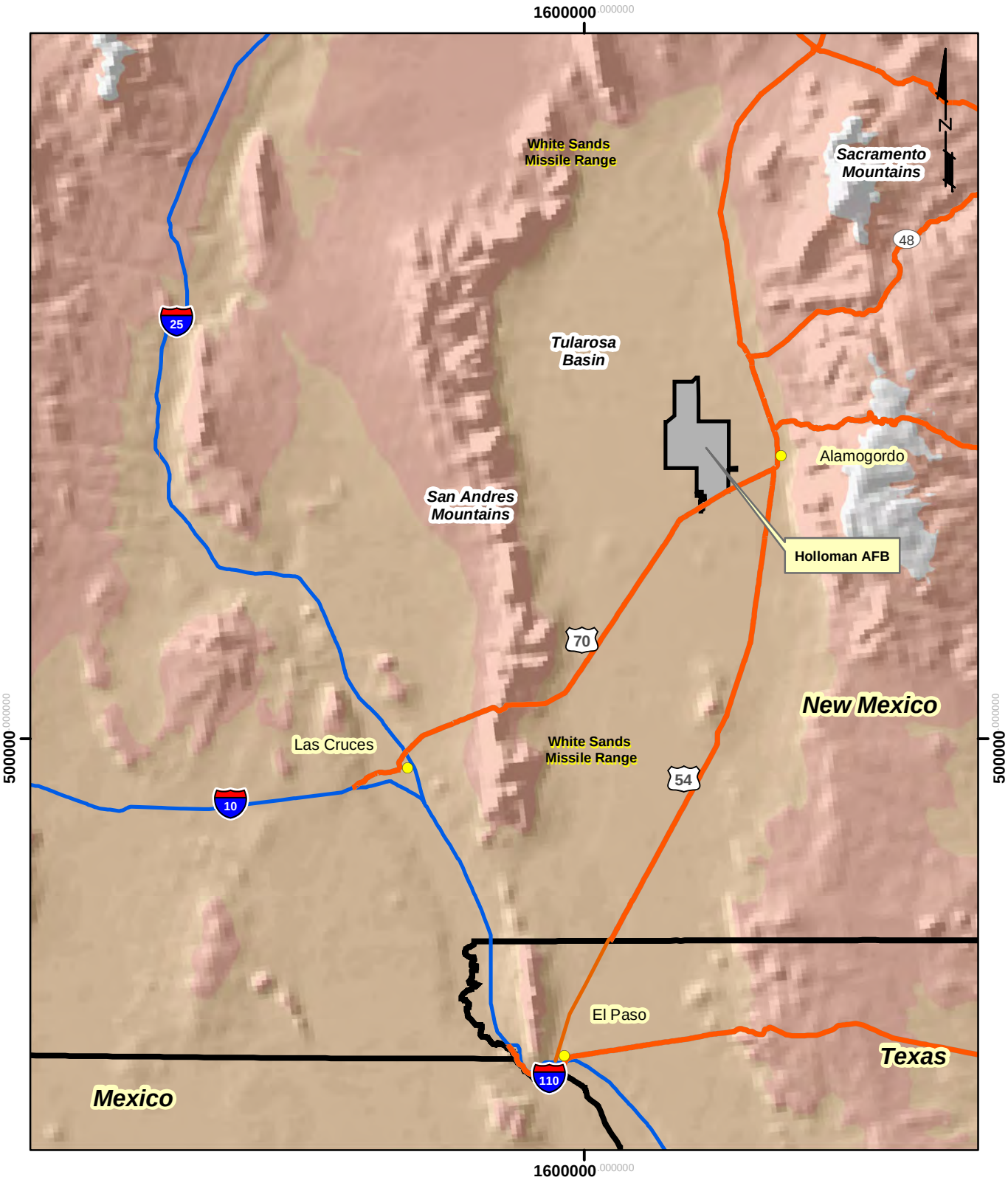

0 4.5 9 18 27 36 Miles

Note: Projection-New Mexico State Plane Coordinate System, Central Zone, North American Horizontal Datum 1983 (feet).

NATIONVIEW

Holloman AFB, New Mexico Location Map				SWMU 8 RCRA Facility Investigation Work Plan Holloman AFB, New Mexico
PROJECT NO.	SCALE	DATE	DRAWN BY: cm	
8080014	1"=18 Miles	8/11/09	DRAWING NO: Figure 1-1	Figure 1-1

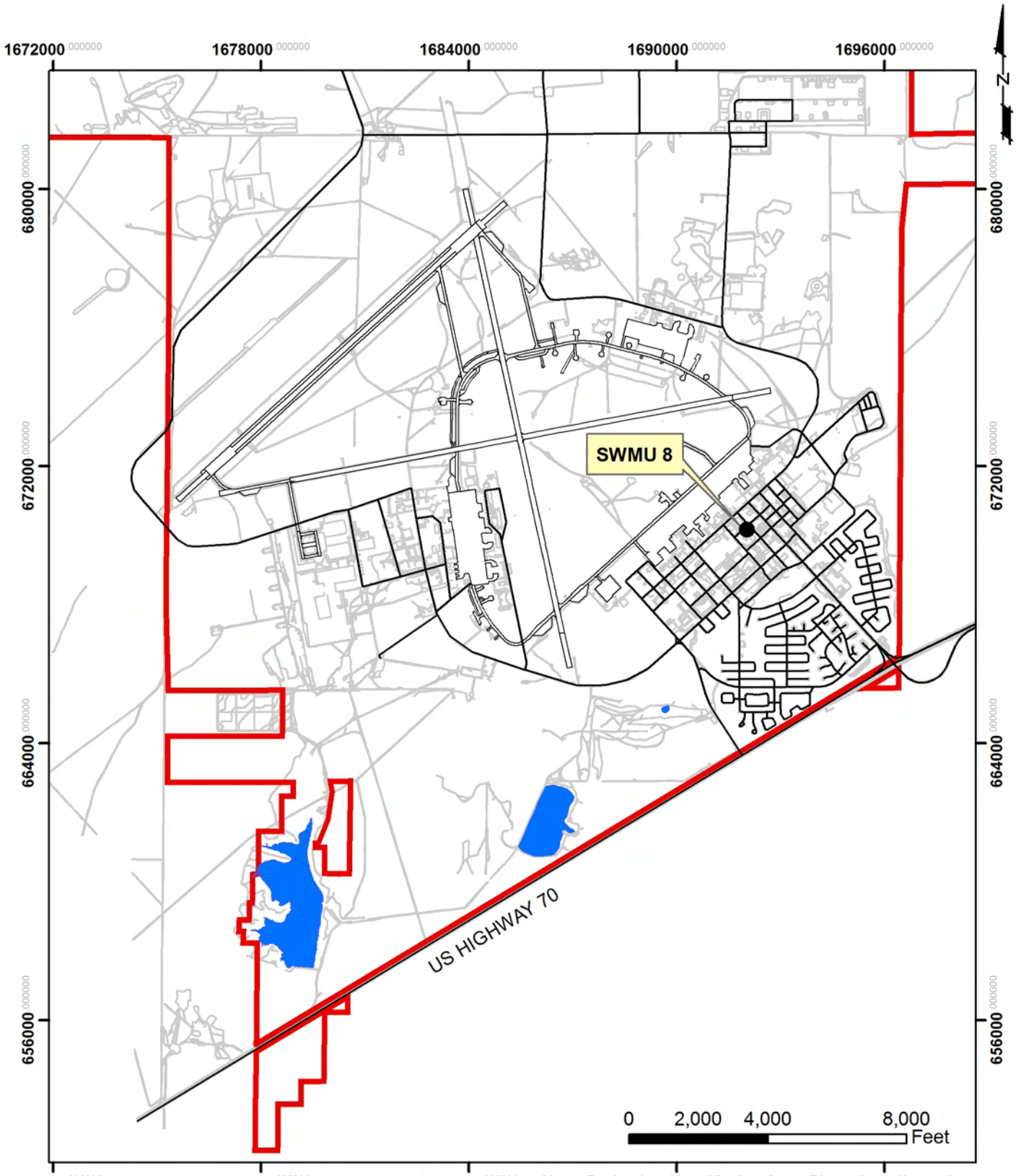

Note: Projection-New Mexico State Plane Coordinate System, Central Zone, North American Horizontal Datum 1983 (feet).

NATIONVIEW

SWMU 8 Site Location Map				
PROJECT NO.	SCALE	DATE	DRAWN BY: cm	
8080014	1"=4000'	8/11/09	DRAWING NO: Figure 1-2	

SWMU 8
RCRA Facility Investigation Work Plan
Holloman AFB, New Mexico

Figure 1-2

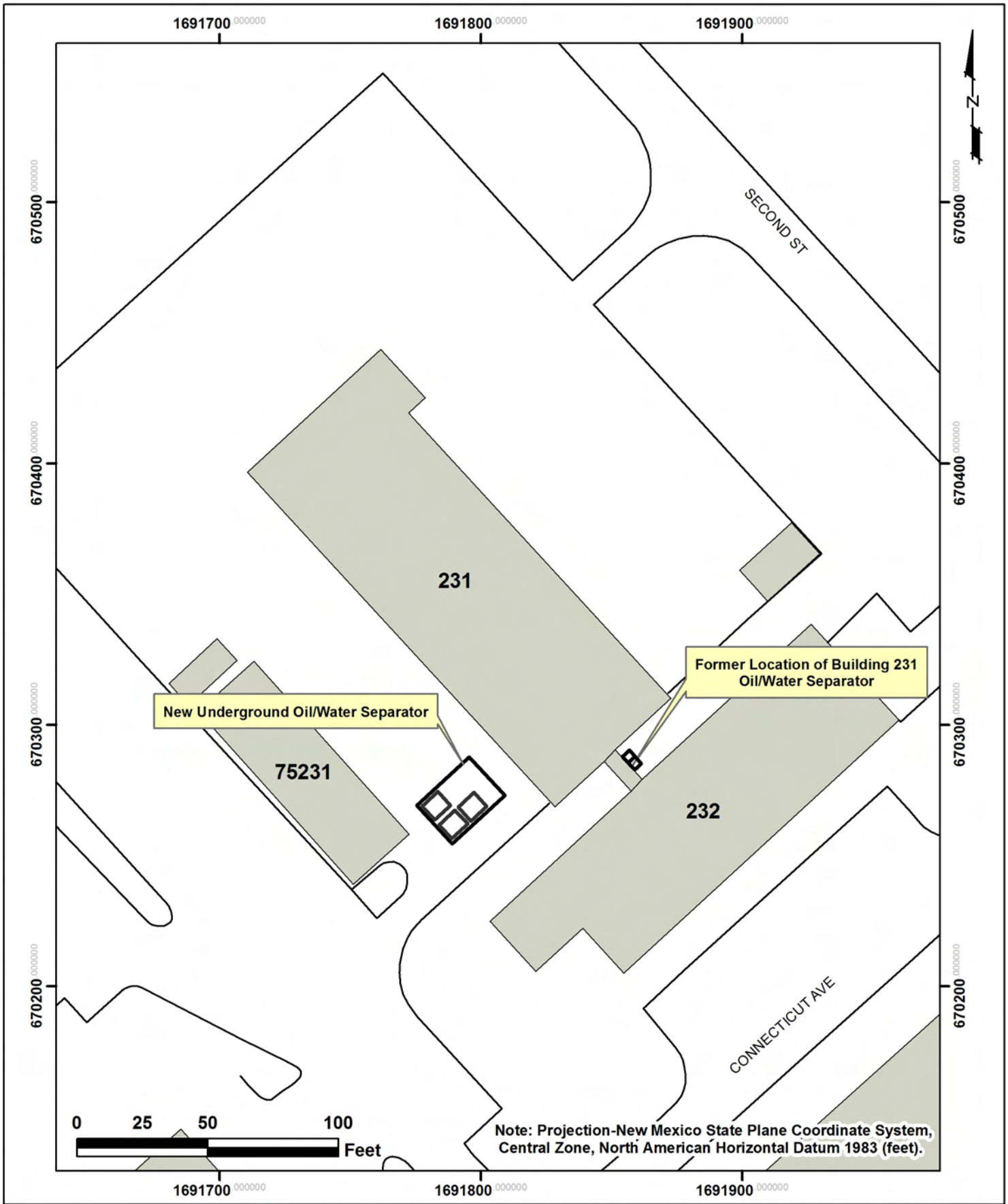

NATIONVIEW

SWMU 8
Site Map

PROJECT NO.	SCALE	DATE	DRAWN BY:
8080014	1"=50'	8/11/09	cm
			DRAWING NO: fig_1-3

SWMU 8
RCRA Facility Investigation Work Plan
Holloman AFB, New Mexico

Figure 1-3

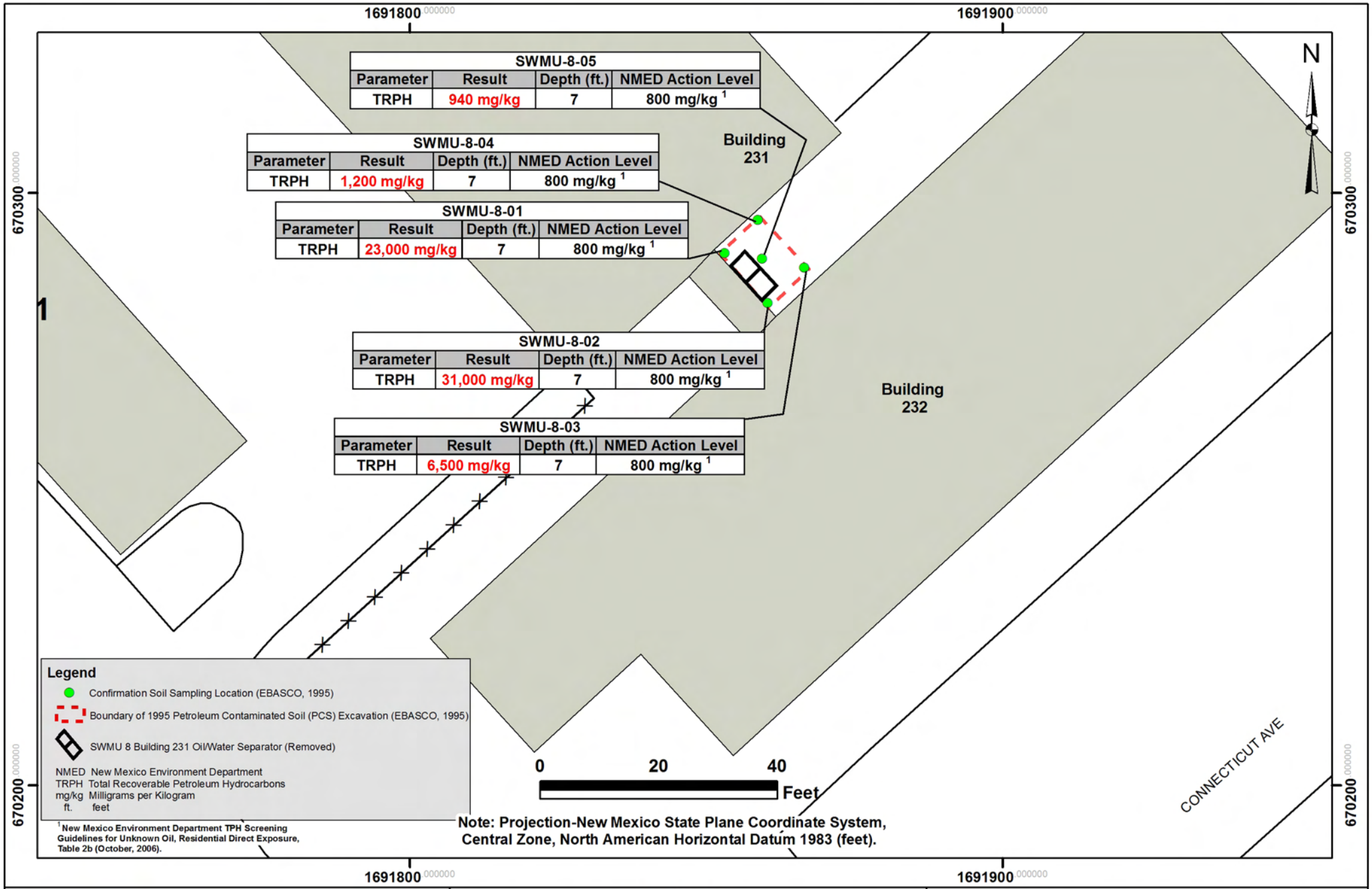

SWMU-8-05

Parameter	Result	Depth (ft.)	NMED Action Level
TRPH	940 mg/kg	7	800 mg/kg [1]

SWMU-8-04

Parameter	Result	Depth (ft.)	NMED Action Level
TRPH	1,200 mg/kg	7	800 mg/kg [1]

SWMU-8-01

Parameter	Result	Depth (ft.)	NMED Action Level
TRPH	23,000 mg/kg	7	800 mg/kg [1]

SWMU-8-02

Parameter	Result	Depth (ft.)	NMED Action Level
TRPH	31,000 mg/kg	7	800 mg/kg [1]

SWMU-8-03

Parameter	Result	Depth (ft.)	NMED Action Level
TRPH	6,500 mg/kg	7	800 mg/kg [1]

NATIONVIEW

SWMU 8
Soil Analytical Results Above NMED Action Levels (EBASCO, 1995)

PROJECT NO.	SCALE	DATE	DRAWN BY:
8080014	1"=20'	3/17/10	cm
			DRAWING NO: fig_1-4

SWMU 8
RCRA Facility Investigation Work Plan
Holloman AFB, New Mexico

Figure 1-4

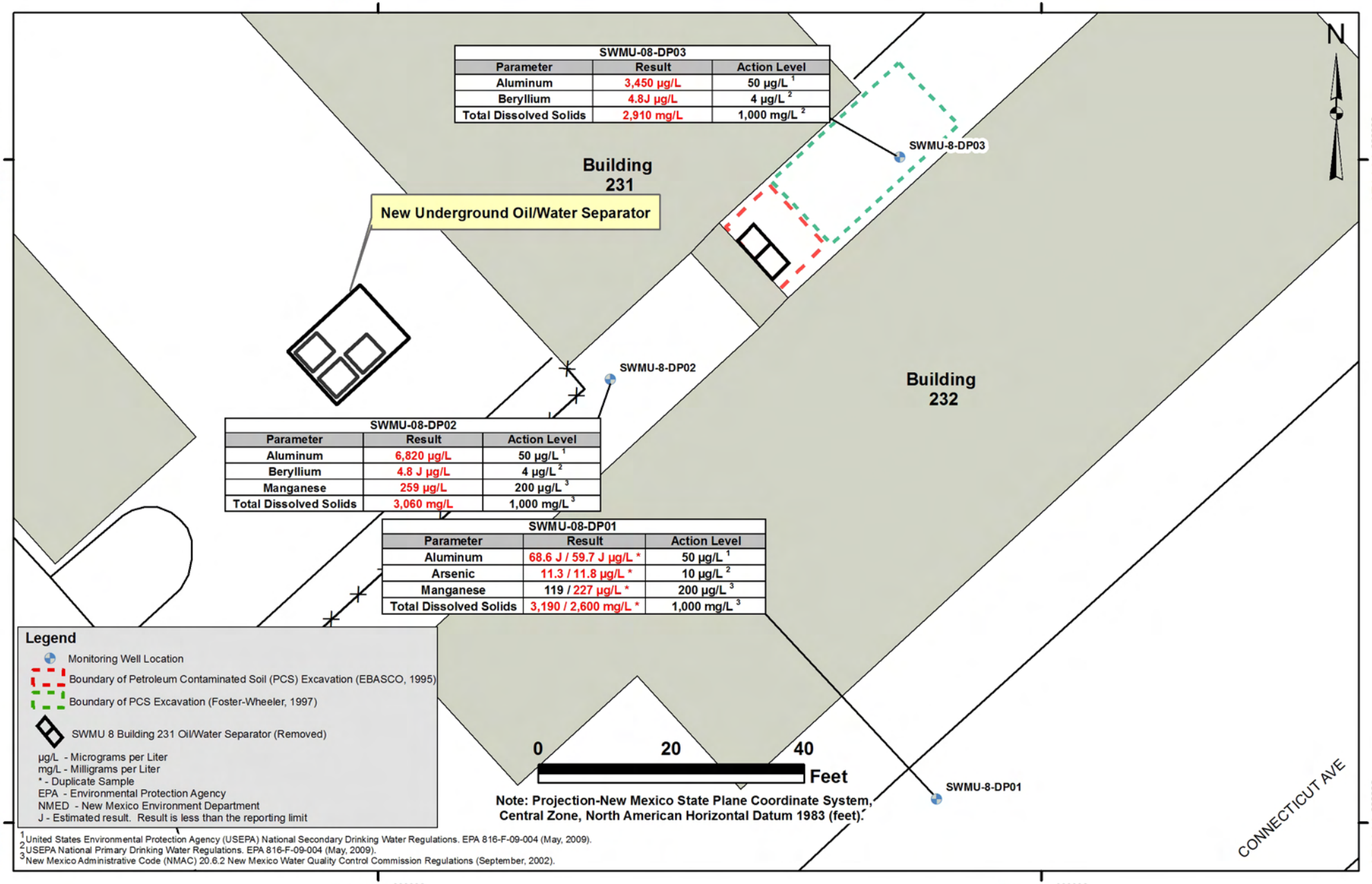

SWMU-08-DP03

Parameter	Result	Action Level
Aluminum	3,450 µg/L	50 µg/L [1]
Beryllium	4.8J µg/L	4 µg/L [2]
Total Dissolved Solids	2,910 mg/L	1,000 mg/L [2]

SWMU-08-DP02

Parameter	Result	Action Level
Aluminum	6,820 µg/L	50 µg/L [1]
Beryllium	4.8 J µg/L	4 µg/L [2]
Manganese	259 µg/L	200 µg/L [3]
Total Dissolved Solids	3,060 mg/L	1,000 mg/L [3]

SWMU-08-DP01

Parameter	Result	Action Level
Aluminum	68.6 J / 59.7 J µg/L *	50 µg/L [1]
Arsenic	11.3 / 11.8 µg/L *	10 µg/L [2]
Manganese	119 / 227 µg/L *	200 µg/L [3]
Total Dissolved Solids	3,190 / 2,600 mg/L *	1,000 mg/L [3]

NATIONVIEW

SWMU 8
Groundwater Analytical Results Above EPA and NMED Action Levels (Bhate, 2006)

PROJECT NO.	SCALE	DATE	DRAWN BY:
8080014	1"=20'	3/17/10	cm
			DRAWING NO: fig_1-5

SWMU 8
RCRA Facility Investigation Work Plan
Holloman AFB, New Mexico

Figure 1-5

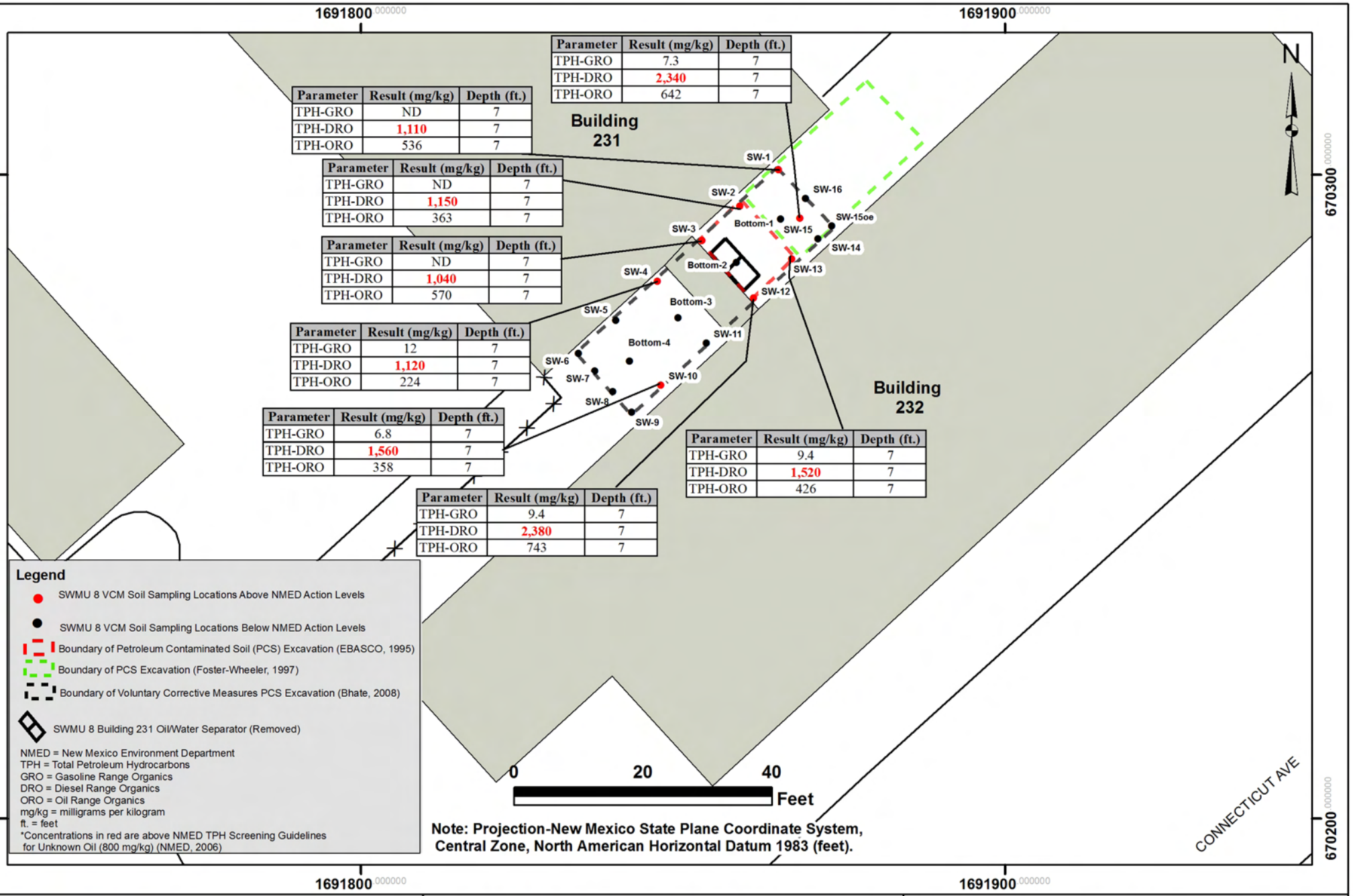

Parameter	Result (mg/kg)	Depth (ft.)
TPH-GRO	7.3	7
TPH-DRO	2,340	7
TPH-ORO	642	7

Parameter	Result (mg/kg)	Depth (ft.)
TPH-GRO	ND	7
TPH-DRO	1,110	7
TPH-ORO	536	7

Parameter	Result (mg/kg)	Depth (ft.)
TPH-GRO	ND	7
TPH-DRO	1,150	7
TPH-ORO	363	7

Parameter	Result (mg/kg)	Depth (ft.)
TPH-GRO	ND	7
TPH-DRO	1,040	7
TPH-ORO	570	7

Parameter	Result (mg/kg)	Depth (ft.)
TPH-GRO	12	7
TPH-DRO	1,120	7
TPH-ORO	224	7

Parameter	Result (mg/kg)	Depth (ft.)
TPH-GRO	6.8	7
TPH-DRO	1,560	7
TPH-ORO	358	7

Parameter	Result (mg/kg)	Depth (ft.)
TPH-GRO	9.4	7
TPH-DRO	2,380	7
TPH-ORO	743	7

Parameter	Result (mg/kg)	Depth (ft.)
TPH-GRO	9.4	7
TPH-DRO	1,520	7
TPH-ORO	426	7

NATIONVIEW

SWMU 8 Voluntary Corrective Measures Soil Analytical Results Above NMED Action Levels (Bhate, 2008)

PROJECT NO.	SCALE	DATE	DRAWN BY:
8080014	1"=20'	3/17/10	cm
			DRAWING NO: fig_1-6

SWMU 8
RCRA Facility Investigation Work Plan
Holloman AFB, New Mexico

Figure 1-6

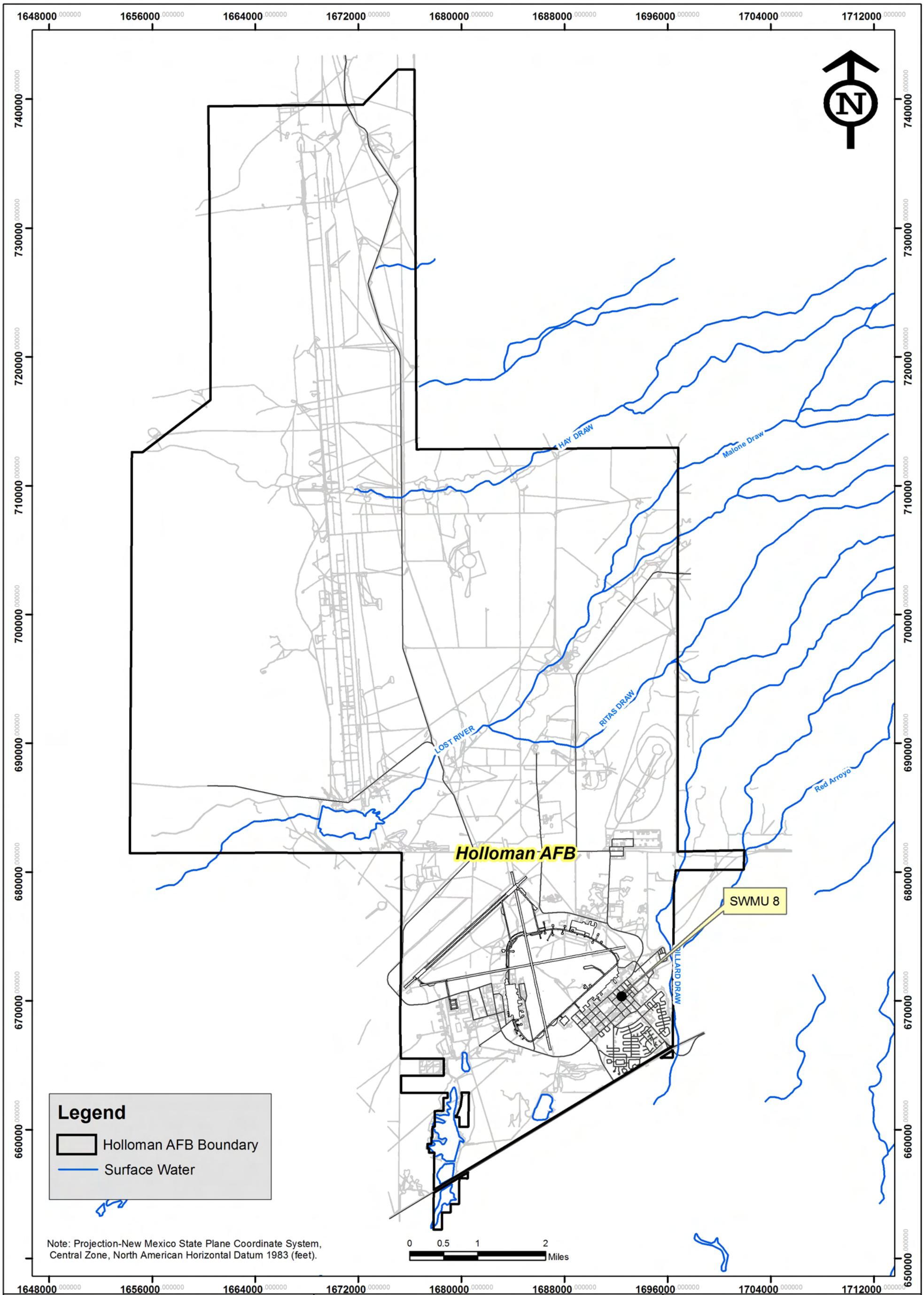

NATIONVIEW

Surface Drainages
Holloman AFB, New Mexico

PROJECT NO.	SCALE	DATE	DRAWN BY: cm
8080014	1"=7000'	7/24/09	DRAWING NO: Figure 2-1

SWMU 8
RCRA Facility Investigation Work Plan
Holloman AFB, New Mexico

Figure 2-1

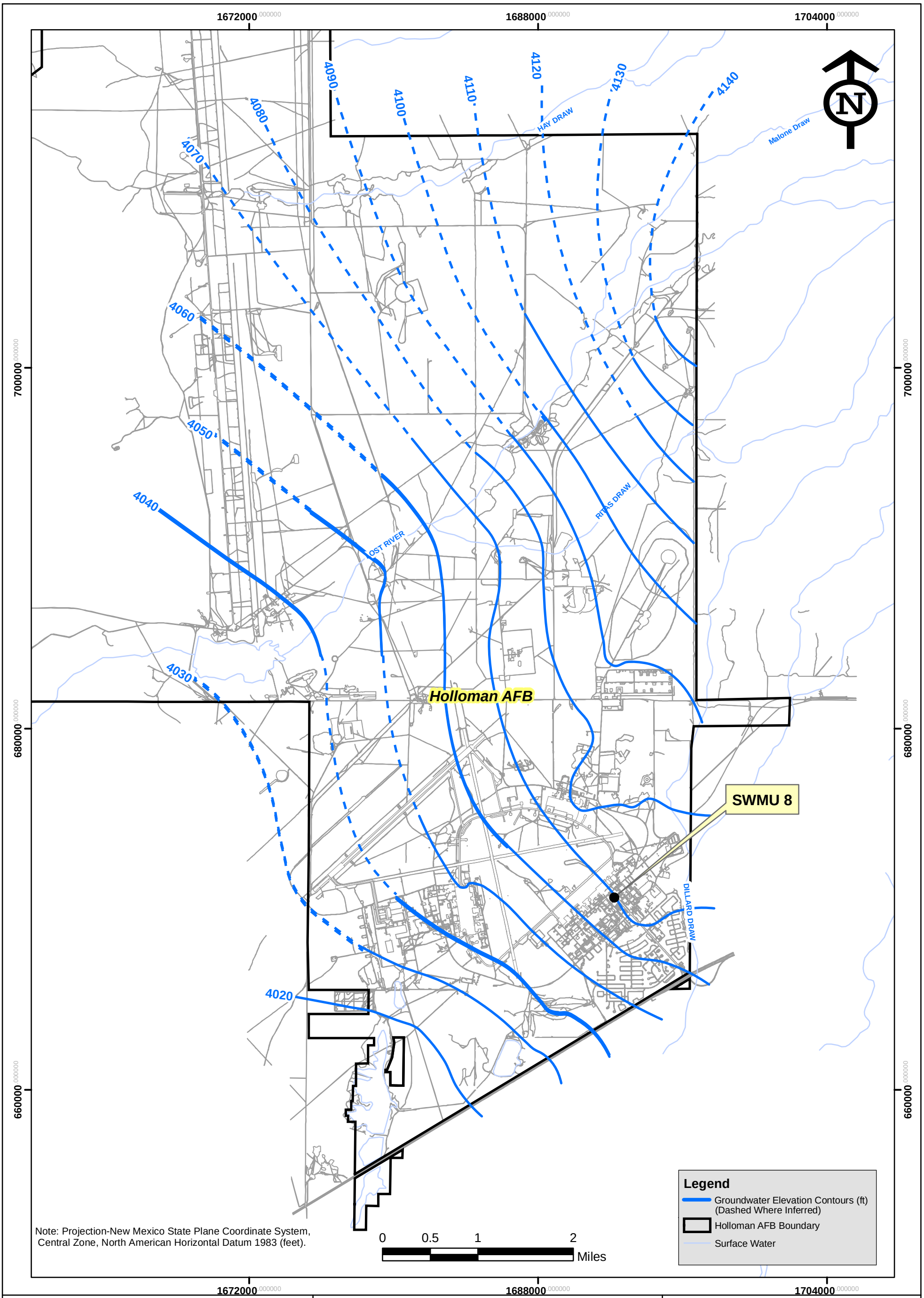

NATIONVIEW

Basewide Groundwater Contour Map
Holloman AFB, New Mexico

PROJECT NO.	SCALE	DATE	DRAWN BY: cm
8080014	1"=5000'	3/17/10	DRAWING NO: Figure 2-2

SWMU 8
RCRA Facility Investigation Work Plan
Holloman AFB, New Mexico

Figure 2-2

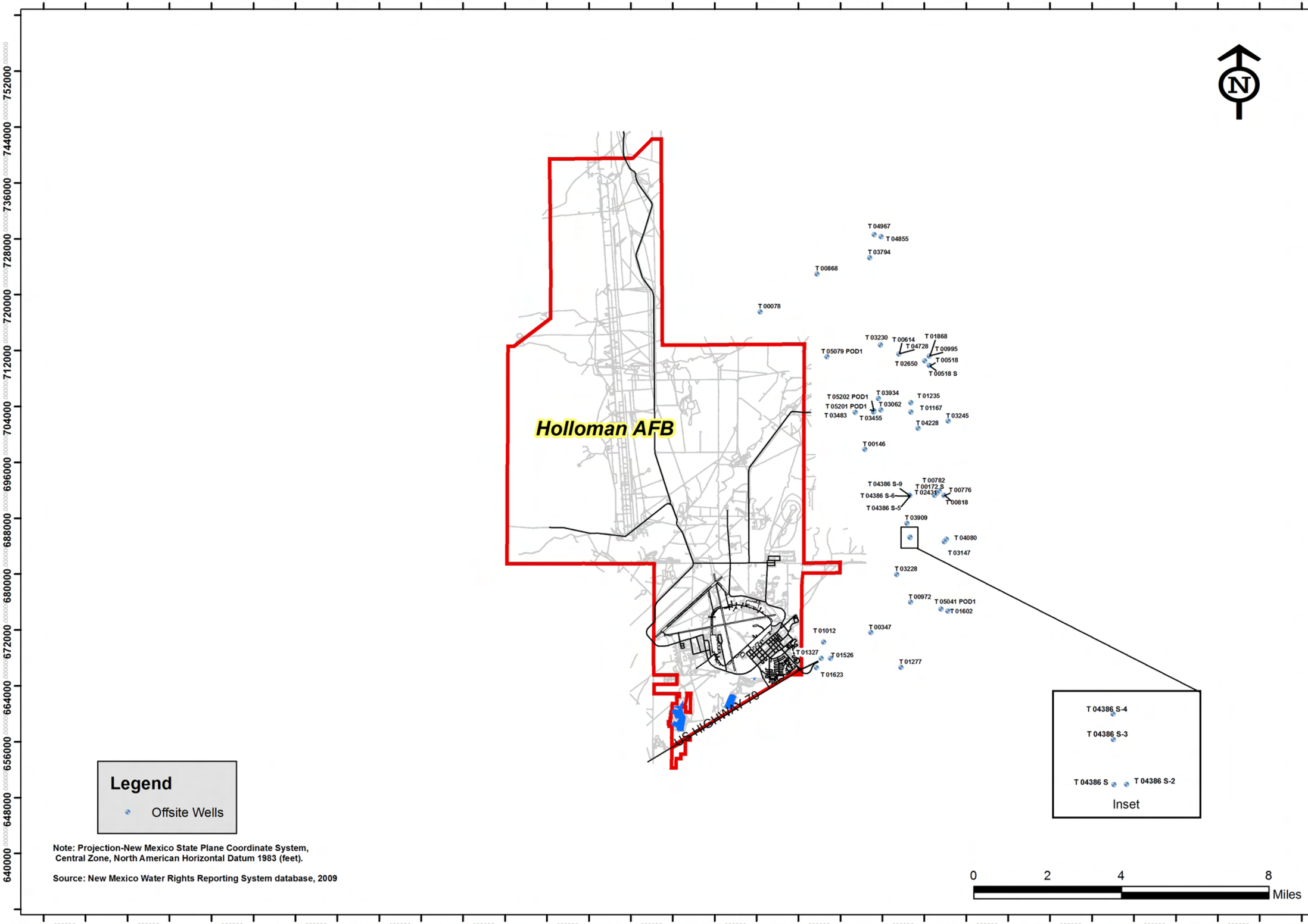

SWMU 8
RCRA Facility Investigation Work Plan
Holloman AFB, New Mexico

Figure 2-3

Groundwater Wells Located Within a 4-Mile Radius of Holloman AFB

PROJECT NO.	SCALE	DATE	DRAWN BY:	DRAWING NO:
8080014	Shown	8/11/09	cm	Figure 2-3

NATIONVIEW

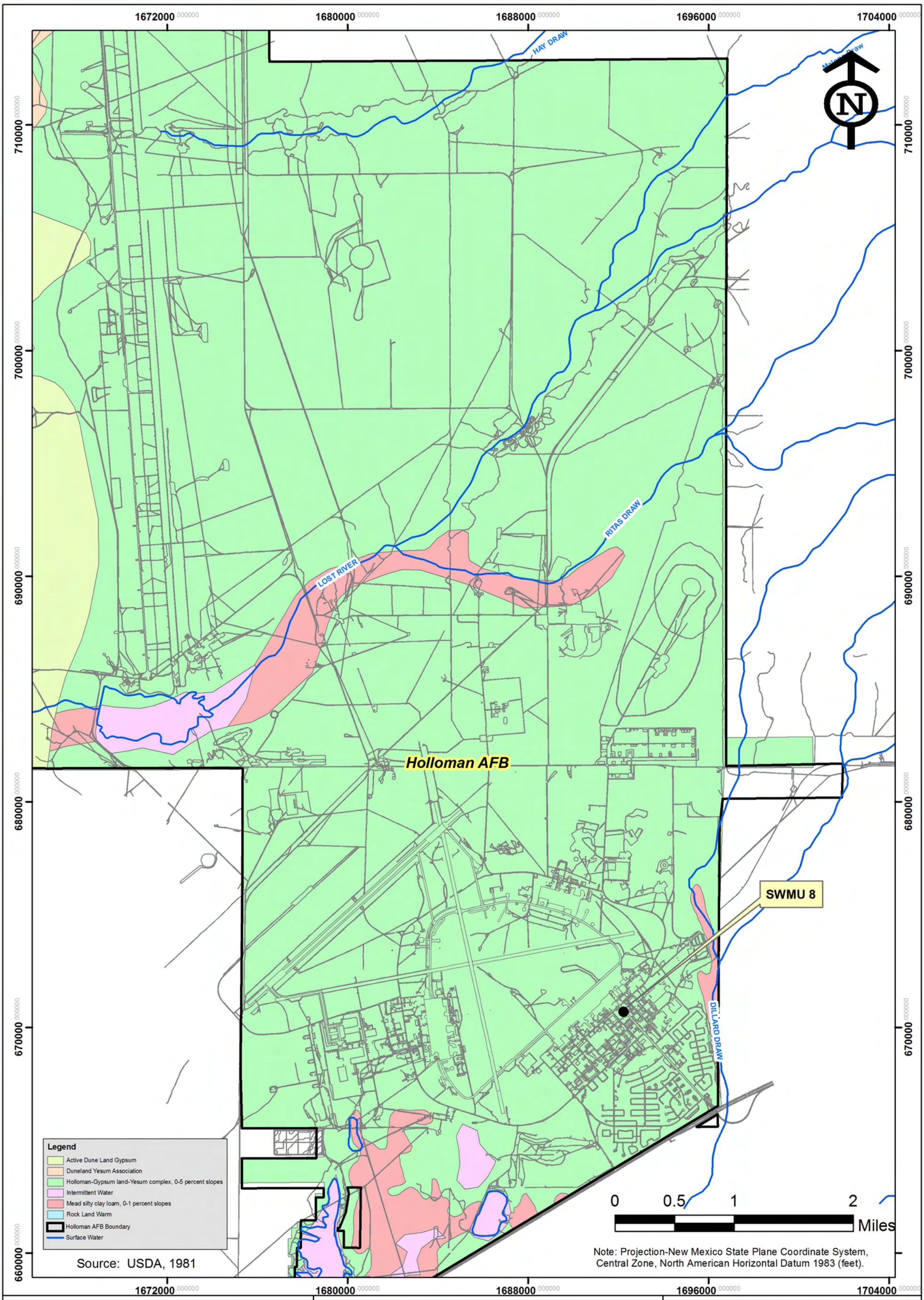

NATIONVIEW

Soil Map
Holloman AFB, New Mexico

PROJECT NO.	SCALE	DATE	DRAWN BY: cm
8080014	1"=4000'	7/28/09	DRAWING NO: Figure 2-4

SWMU 8
RCRA Facility Investigation Work Plan
Holloman AFB, New Mexico

Figure 2-4

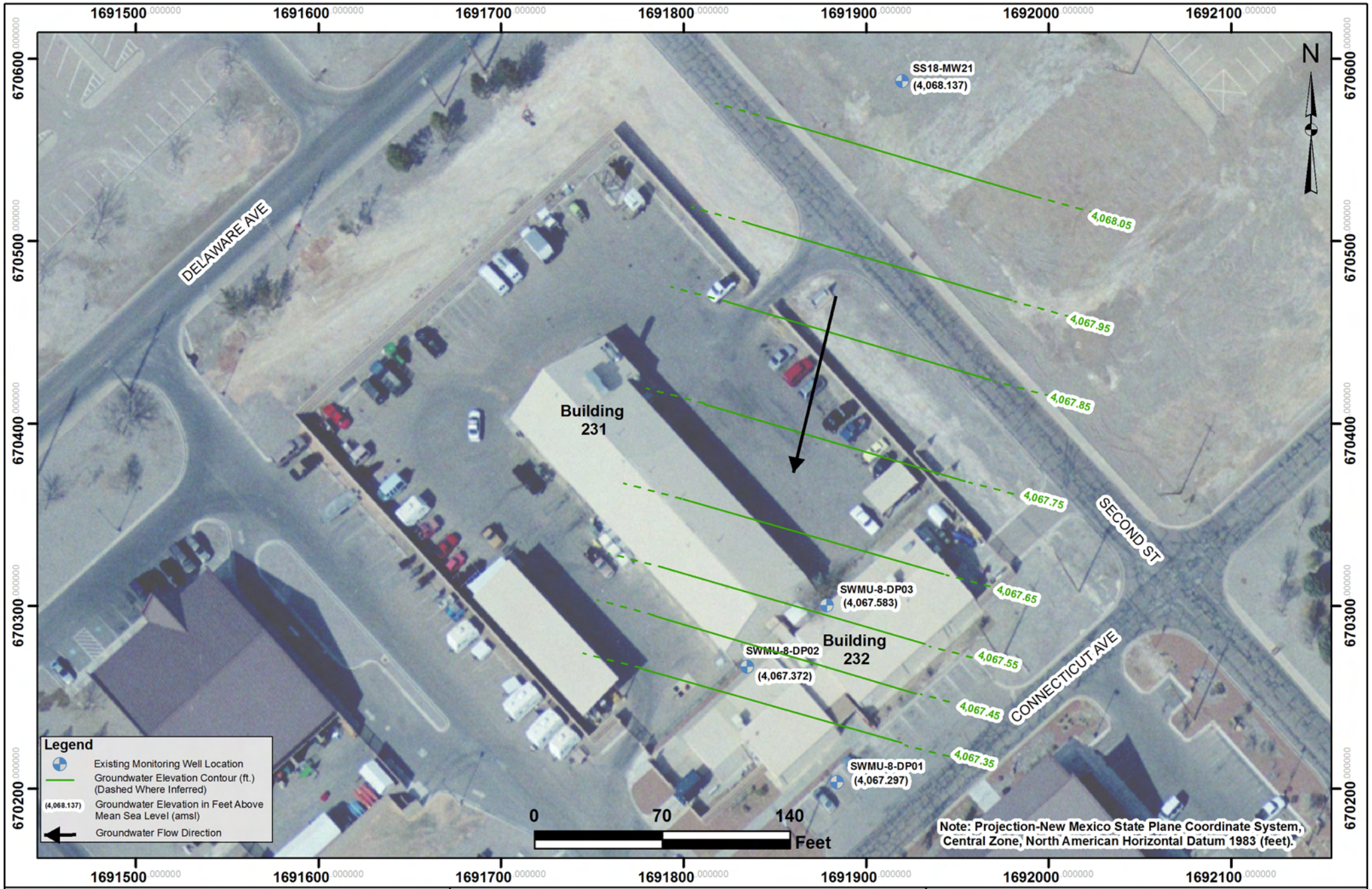

NATIONVIEW

SWMU 8
Potentiometric Surface Map
(September, 2009)

PROJECT NO.	SCALE	DATE	DRAWN BY:	cm
8080014	1"=70'	10/1/09	DRAWING NO:	fig_2-5

SWMU 8
RCRA Facility Investigation Work Plan
Holloman AFB, New Mexico

Figure 2-5

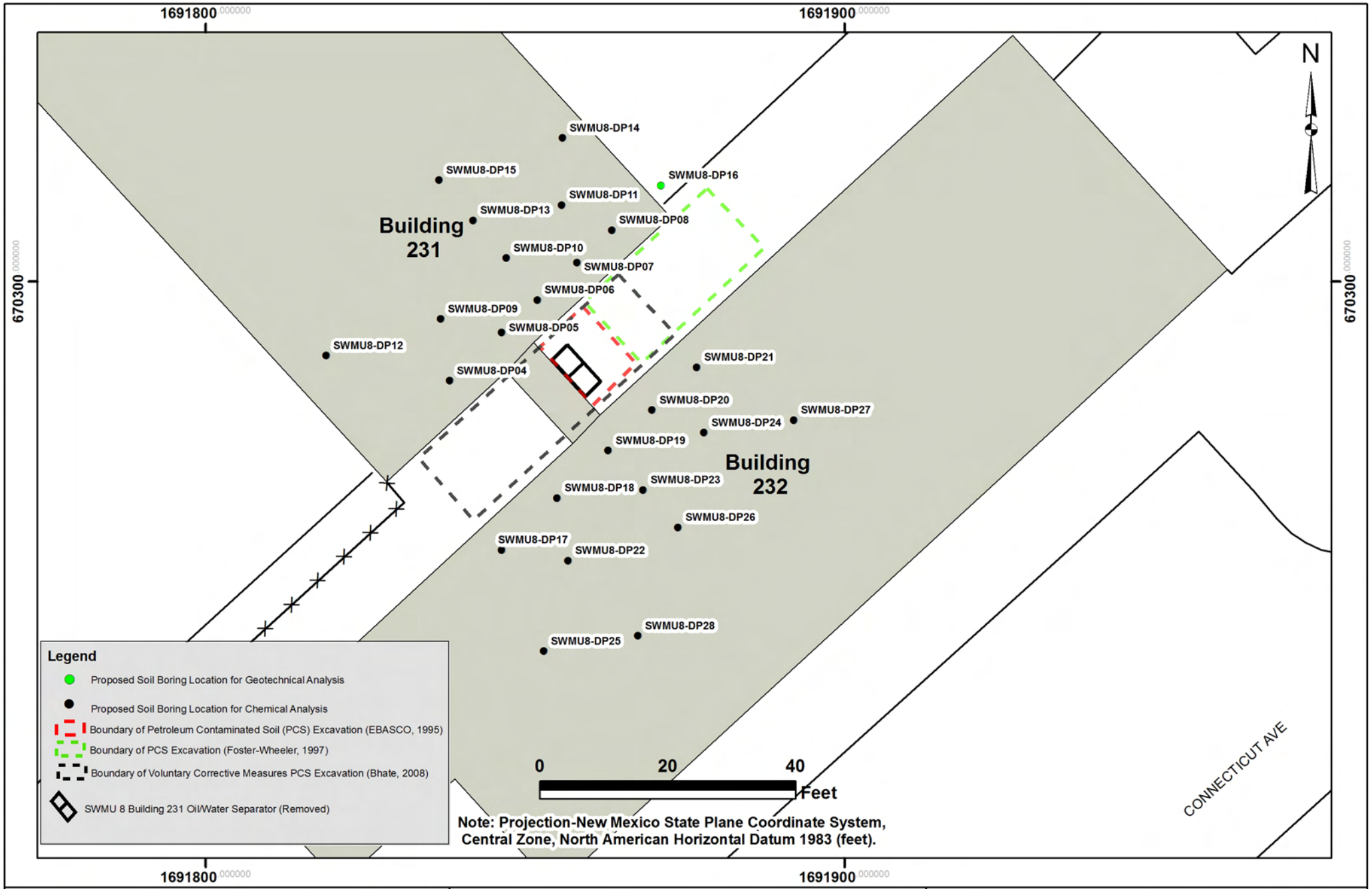

NATIONVIEW

SWMU 8
Proposed Soil Sampling Locations

PROJECT NO.	SCALE	DATE	DRAWN BY:
8080014	1"=20'	3/17/10	cm
			DRAWING NO: fig_6-1

SWMU 8
RCRA Facility Investigation Work Plan
Holloman AFB, New Mexico

Figure 6-1

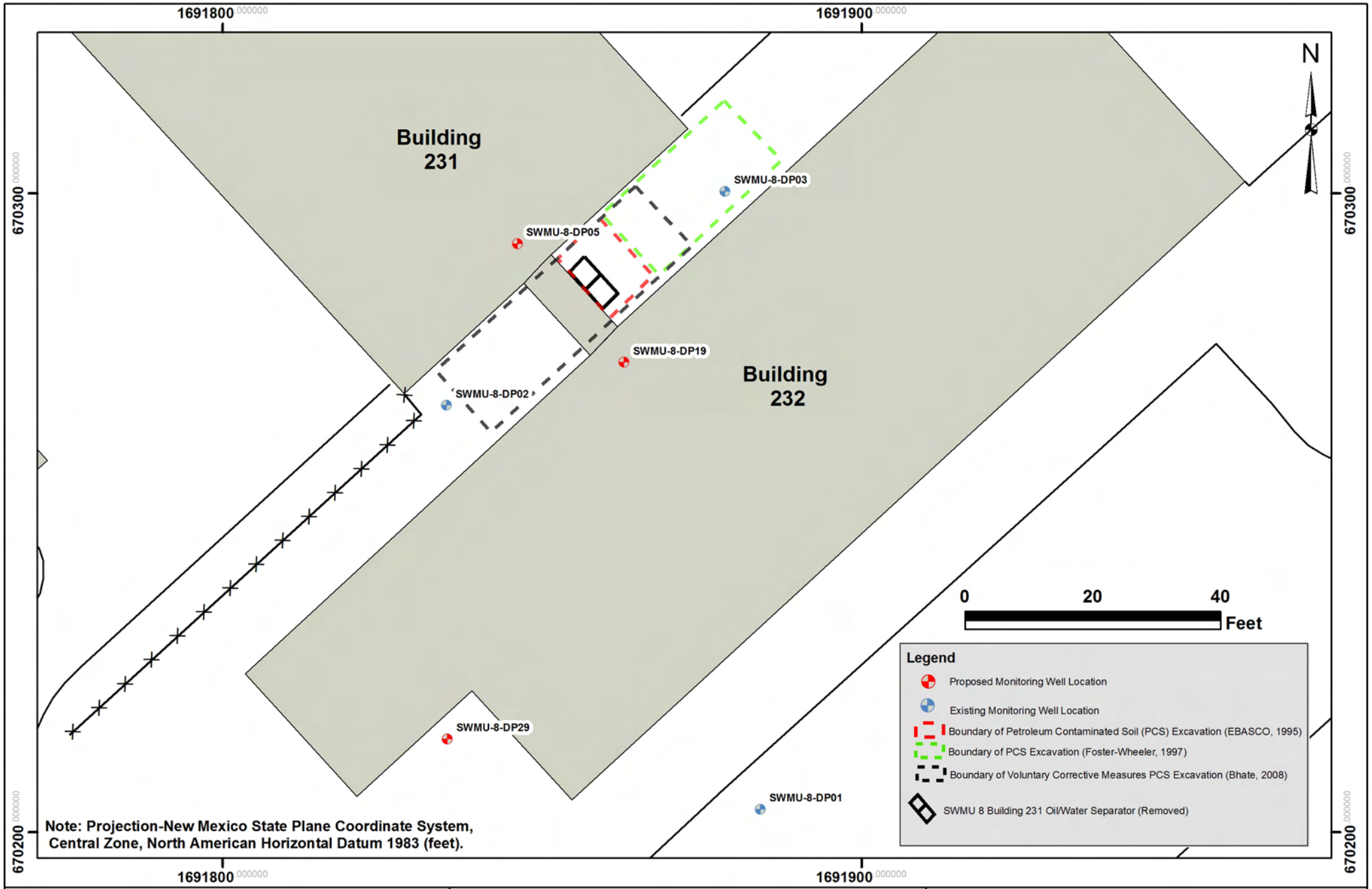

NATIONVIEW

SWMU 8
Proposed and Existing Monitoring Well Locations

PROJECT NO.	SCALE	DATE	DRAWN BY:
8080014	1"=20'	3/17/10	cm
			DRAWING NO: fig_6-2

SWMU 8
RCRA Facility Investigation Work Plan
Holloman AFB, New Mexico

Figure 6-2

TABLES

Table 2-1
Groundwater Wells
Located Within a 4-Mile Radius
of Holloman Air Force Base
SWMU-8 RFI Work Plan
Holloman AFB, New Mexico
NationView Project No.: 8080014.03

Well Identification Number	Use	NAD 83 UTM (meters)		Well Depth (feet)
		Northing	Easting	
T 00078	Commercial	398468	3648755	428
T 00868	Domestic	400972	3650377	215
T 03794	Irrigation	403280	3651057	250
T 04855	Domestic	403784	3651965	235
T 04967	Domestic	403480	3652067	200
T 00518	Domestic	405819	3646323	305
T 00518 S	Domestic	405819	3646323	220
T 00614	Domestic	404503	3646838	245
T 00995	Domestic	405824	3646730	308
T 01868	Domestic	405824	3646730	280
T 02650	Domestic	405619	3646523	265
T 03230	Domestic	403699	3647252	160
T 04728	Domestic	404503	3646838	216
T 05079 POD1	Domestic	401365	3646757	406
T 01167	Livestock	404993	3644302	170
T 01235	Irrigation	404995	3644706	200
T 03062	Commercial	403678	3644412	295
T 03455	Domestic	403365	3644318	150
T 03483	Domestic	402565	3644318	140
T 03934	Commercial	403578	3644915	160
T 05201 POD1	Irrigation	403380	3644374	295
T 05202 POD1	Irrigation	403381	3644374	250
T 00146	Livestock	402960	3642700	110
T 03245	Commercial	406609	3643887	190
T 04228	Domestic	405295	3643589	180
T 04386 S-6	Commercial	404903	3640666	290
T 04386 S-9	Commercial	404895	3640673	320
T 00172 S	Irrigation	406088	3640755	125
T 00776	Irrigation	406391	3640650	120
T 00782	Domestic	406187	3640854	120
T 00818	Irrigation	406391	3640650	125
T 02431	Domestic	405987	3640654	152
T 03909	Livestock	404765	3639453	140
T 04386 S	Commercial	404886	3638830	290
T 04386 S-2	Commercial	404888	3638830	310
T 04386 S-3	Commercial	404886	3638837	300
T 04386 S-4	Commercial	404886	3638841	295
T 04386 S-5	Commercial	404903	3640661	310
T 03147	Domestic	406380	3638633	135
T 04080	Domestic	406481	3638734	170
T 03228	Domestic	404290	3637226	160
T 00347	Domestic	403131	3634704	182
T 00972	Domestic	404882	3636009	150
T 01602	Domestic	406510	3635592	135
T 05041 POD1	Domestic	406205	3635697	200
T 01012	Commercial	401072	3634316	72
T 01277	Commercial	404434	3633172	104
T 01327	Commercial	400958	3633604	90
T 01526	Commercial	401368	3633601	152
T 01623	Domestic	400743	3633202	260

Notes:
NAD - North American Datum
UTM - Universal Transverse Mercator
Source: New Mexico Water Rights Reporting System database, 2009

Table 2-2
SWMU 8 Groundwater Elevation Summary (September 2009)
SWMU 8 RFI Work Plan
Holloman AFB, New Mexico
NationView Project No. 8080014.03

Monitoring Well ID	Northing	Easting	Elevation TOC (ft. amsl)	DTW from TOC (ft. below TOC)	Groundwater Elevation September 2009 (ft. amsl)
SWMU8-DP01	670203.701	1691884.472	4,072.40	5.10	4,067.297
SWMU8-DP02	670266.812	1691834.779	4,073.73	6.36	4,067.372
SWMU8-DP03	670300.290	1691878.600	4,073.50	5.92	4,067.583
SS18-MW21	670579.118	1691933.434	4,073.94	5.80	4,068.137

Notes:
ID = Identification
TOC = Top of Casing
ft. = feet
amsl = above mean sea level

Table 4-1
Plant Species Observed at Holloman Air Force Base
SWMU-8 RFI Work Plan
Holloman AFB, New Mexico
NationView Project No: 8080014.03

Common Name	Scientific Name
Desert holly	*Acourtia nana*
Iodine bush (or pickleweed bush)	*Allenrolfea occidentalis*
Western ragweed	*Ambrosia psilostachya*
Fourwing saltbush	*Atriplex canescens*
Seep willow	*Baccharis salicifolia*
Thistle	*Cirsium undulatum*
Alkaliweed	*Cressa truxillensis*
Fluffgrass	*Dasyochloa pulchella*
Tansymustard	*Descurainia pinnata*
Desert saltgrass	*Distichlis spicata var. stricta*
Spectaclepod	*Dithyrea wislizeni*
Fendler's hedgehog	*Echinocereus fenderli*
Flaming torch hedgehog	*Echinocereus triglochidiatus*
Torrey's jointfir	*Ephedra torreyana*
Buckwheat	*Eriogonum spp.*
Coryphantha (or spinystar)	*Escobaria vivipara*
Tarbush	*Flourensia cernua*
Broom snakeweed	*Gutierrezia sarothrae*
Salt heliotrope	*Heliotropium curassavicum*
Tobosa	*Hilaria mutica*
Bushpea	*Hoffmanseggia glauca*
Hymonepappus	*Hymenopappus spp.*
Allthorn	*Koeberlinia spinosa*
Creosotebush	*Larrea tridentata*
Peppergrass	*Lepidium virginicum*
Bladderpod	*Lesquerella spp.*
Wolfberry	*Lycium berlandieri*
Blazingstar	*Mentzelia multiflora*
Bush muhly	*Muhlenbergia porteri*
Ring muhly	*Muhlenbergia torreyi*
Prickly pear	*Opuntia spp.*
Purple prickly pear	*Opuntia violacea*
Tulip prickly pear	*Opuntia phaeacantha*
Plains prickly pear	*Opuntia polycantha*
Walkingstick cholla	*Opuntia imbracata*
Tasajillo	*Opuntia leptocaulis*
Mariola	*Parthenium incanum*
Devil's claw	*Proboscidea parviflora*
Honey mesquite	*Prosopis glandulosa*
Curly dock	*Rumex crispus*
Russian thistle	*Salsola kali*
Burrograss	*Scleropogon brevifolius*
Silverleaf nightshade	*Solanum elaeagnifolium*
Globemallow	*Sphaeralcea spp.*
Spear globemallow	*Sphaeralcea subhastata*
Alkali sacaton	*Sporobolus airoides*
Neally dropseed	*Sporobolus nealleyi*
Saltcedar	*Tamarix ramosissima*
Grama grass cactus	*Toumeya papyracantha*
Soaptree yucca	*Yucca elata*

Table 4-2
Herpetofauna Species Observed at Holloman Air Force Base
SWMU-8 RFI Work Plan
Holloman AFB, New Mexico
NationView Project No: 8080014.03

Common Name	Scientific Name
Little striped whiptail	*Cnemidophorus inornatus*
New Mexico whiptail	*Cnemidophorus neomexicanus*
Checkered whiptail	*Cnemidophorus tesselatus*
Western diamondback rattlesnake	*Crotalus atrox*
Western prairie rattlesnake (or Western	*Crotalus viridis*
Common collared lizard	*Crotaphytus collaris*
Long-nosed leopard lizard	*Gambelia wislizenii*
Lesser earless lizard	*Holbrookia maculata*
Coachwhip	*Masticophis flagellum*
Texas horned lizard	*Phrynosoma cornutum*
Short-horned lizard	*Phrynosoma modestum*
Gopher snake	*Pituophis melanoleucus*
Couch's spadefoot toad	*Scaphiopus couchii*
Desert spiny lizard	*Sceloporus magister*
Massasauga	*Sistrurus catenatus*
Ground snake	*Sonora semiannulata*
Side-blotched lizard	*Uta stansburiana*

Table 4-3
Bat Species Observed at Holloman Air Force Base
SWMU-8 RFI Work Plan
Holloman AFB, New Mexico
NationView Project No: 8080014.03

Common Name	Scientific Name
Pallid bat	*Antrozous pallidus pallidus*
Mexican free-tailed bat	*Tadarida brasiliensis*
Hoary bat	*Lasiurus cinereus*
Small-footed myotis	*Myotis ciliolabrum melanorhinus*
California myotis	*Myotis californicus*
Townsend's big-eared bat	*Corynorhinus townsendii*
Silver-haired bat	*Lasionycteris noctivagans*
Spotted bat	*Euderma maculatum*

Table 4-4
Rodent Species Observed at Holloman Air Force Base
SWMU-8 RFI Work Plan
Holloman AFB, New Mexico
NationView Project No: 8080014.03

Common Name	Scientific Name
Desert Pocket Mouse	*Chaetodipus penicillatus*
Merriam Kangaroo Rat	*Dipodomys merriami*
Ord's Kangaroo Rat	*Dipodomys ordii*
House Mouse	*Mus musculus*
Southern Plains Woodrat	*Neotoma micropus canescens*
Mearn's Grasshopper Mouse	*Onychomys arenicola*
Plains Pocket Mouse	*Perognathus flavescens*
Plains Pocket Mouse (lighter pelage)	*Perognathus flavescens gypsi*
Silky Pocket Mouse	*Perognathus flavus*
Cactus Mouse	*Peromyscus eremicus*
White-footed Mouse	*Peromyscus leucopus*
Deer Mouse	*Peromyscus maniculatus*
Western Harvest Mouse	*Reithrodontomys megalotis*
Spotted Ground Squirrel	*Spermophilus spilosoma*

Table 4-5
Bird Species Observed at Holloman Air Force Base
SWMU-8 RFI Work Plan
Holloman AFB, New Mexico
NationView Project No: 8080014.03

Common Name	Scientific Name
Raptors	
Turkey vulture	*Cathartes aura*
American kestrel	*Falco sparverius*
Red-tailed hawk	*Buteo jamaicensis*
Northern harrier	*Circus cyaneus*
Goatsuckers	
Lesser nighthawk	*Chordeiles acutipennis*
Perching Birds and Neotropical Shorebirds	
Horned lark	*Eremophila alpestris*
Cactus wren	*Campylorhynchus brunneicapillus*
Black-throated sparrow	*Amphispiza bilineata*
Western meadowlark	*Sturnella neglecta*
Scott's oriole	*Icterus parisorum*
American avocet	*Recurvirostra Americana*
Green heron	*Butorides virescens*
Western kingbird	*Tyrannus verticalis*
Blue grosbeak	*Guiraca caerulea*
Flycatchers	*Empidonax sp.*
Wilson's warbler	*Wilsonia Canadensis*
Shorebirds and Waterfowl	
Mallards	*Anas platyrhynchos*
Northern shoveler	*Anas clypeata*
Blue-winged teal	*Anas discors*
Lesser scaup	*Aythya affinis*
Ring-necked duck	*Aythya collaris*
Ruddy duck	*Oxyura jamaicensis*
Snowy plover	*Charadrius alexandrinus nivosus*
Wilson's phalarope	*Phalaropus tricolor*

Table 6-1
DPT Soil Sampling and Analysis
SWMU 8 RFI Work Plan
Holloman AFB, New Mexico
NationView Project No. 8080014.03

Analysis	Method	Primary	Duplicates [1]	MS [2]	MSD [3]	Trip blanks [4]	Total
VOC	USEPA SW846 Method 8260B	24	3	2	2	10	41
SVOC	USEPA SW846 Method 8270C	24	3	2	2	0	31
TAL Metals	USEPA SW846 Methods 6010B/7471A	24	3	2	2	0	31
TPH DRO	USEPA SW846 Method 8015B	24	3	2	2	0	31
TPH GRO	USEPA SW846 Method 8015B	24	3	2	2	0	31
TPH ORO	USEPA SW846 Method 8015B	24	3	2	2	0	31
PCB	USEPA SW846 Method 8082	24	3	2	2	0	31
Moisture Content	USEPA SM19 Method 2540B	2	0	0	0	0	2
Dry Bulk Density	ASTM Method D2937-94	2	0	0	0	0	2
Specific Gravity	ASTM Method D1429-86	2	0	0	0	0	2
Fractional Organic Carbon Content	ASTM Method D2974-87	2	0	0	0	0	2
VOC (Field Sceening)	PID (Headspace)	136 [5]	0	0	0	0	136

Notes:
ASTM = American Society for Testing and Materials
USEPA = U.S. Environmental Protection Agency
SW = USEPA office of Soild Waste
SM = Standard Method
MS = Matrix Spike
MSD = Matrix Spike Duplicate
VOC = Volatile Organic Compounds
SVOC = Semi-volatile Organic Compounds
TAL = Target Analyte List
TPH = Total Petroleum Hydrocarbons
DRO = Diesel Range Organics
GRO = Gasoline Range Organics
ORO = Oil Range Organics
PCB = Polychlorinated Biphenyls
PID = Photoionization Detector

[1] Duplicate samples will be collected at a minimum frequency of 1 for every 10 primary samples collected
[2] MS samples will be collected at a minimum frequency of 1 for every 20 primary samples collected
[3] MSD samples will be collected at a minimum frequency of 1 for every 20 primary samples collected
[4] Estimated, one trip blank will accompany every shipment of VOC samples
[5] Headspace readings collected continuously every 2 feet (estimated footage = 272 feet)

Table 6-2
Groundwater Sampling and Analysis
SWMU 8 RFI Work Plan
Holloman AFB, New Mexico
NationView Project No. 8080014.03

Analysis	Method	Primary	Duplicates [1]	MS [2]	MSD [3]	Trip blanks [4]	Total
VOC	USEPA SW846 Method 8260B	6	1	1	1	8	17
SVOC	USEPA SW846 Method 8270C	6	1	1	1	0	9
TDS	USEPA SM18 Method 2540C	6	1	1	1	0	9
TAL Metals	USEPA SW846 Methods 6010B/7470A	6	1	1	1	0	9
TPH DRO	USEPA SW846 Method 8015B	6	1	1	1	0	9
TPH GRO	USEPA SW846 Method 8015B	6	1	1	1	0	9
TPH ORO	USEPA SW846 Method 8015B	6	1	1	1	0	9
PCB	USEPA SW846 Method 8082	6	1	1	1	0	9
pH (field screening)	Multi-parameter sonde	6	0	0	0	0	6
Conductivity (field screening)	Multi-parameter sonde	6	0	0	0	0	6
Dissolved Oxygen (field screening)	Multi-parameter sonde	6	0	0	0	0	6
Temperature (field screening)	Multi-parameter sonde	6	0	0	0	0	6

Notes:
USEPA = U.S. Environmental Protection Agency
SW = USEPA Office of Solid Wastes
SM = Standard Method
MS = Matrix Spike
MSD = Matrix Spike Duplicate
VOC = Volatile Organic Compounds
SVOC = Semi-volatile Organic Compounds
TDS = Total dissolved solids
TAL = Target Analyte List
TPH = Total Petroleum Hydrocarbons
DRO = Diesel Range Organics
GRO = Gasoline Range Organics
ORO = Oil Range Organics
PCB = Polychlorinated Biphenyls
pH = Potential of hydrogen

[1] Duplicate samples will be collected at a minimum frequency of 1 for every 10 primary samples collected
[2] MS samples will be collected at a minimum frequency of 1 for every 20 primary samples collected
[3] MSD samples will be collected at a minimum frequency of 1 for every 20 primary samples collected
[4] Estimated, one trip blank will accompany every shipment of VOC samples

Table 6-3
Sample Containers and Holding Times by Sample Media
SWMU 8 RFI Work Plan
Holloman AFB, New Mexico
NationView Project No. 8080014.03

Media	Collection Information	Analyte Group (Method)							
		TPH-GRO (USEPA SW846 Method 8015B)	TPH-DRO-ORO (USEPA SW846 Method 8015B)	VOCs (USEPA SW846 Method 8260B)	SVOCs (USEPA SW846 Method 8270C)	PCBs (USEPA SW846 Method 8082)	TAL Metals (USEPA SW846 Methods 6010B/7471A/7470A)	Total Dissolved Solids (USEPA SM18 Method 2540C)	Moisture Content (USEPA SM19 Method 2540B)
Soil	Container	En Core	8 oz glass jar	Encore	4 oz glass jar	8 oz glass jar	8 oz glass jar	N/A	4 oz glass jar
	Quantity	2	1	3	1	1	1	N/A	1
	Holding Times	48 hours	14 days (extraction) 40 days (analysis)	48 hours	14 days (extraction) 40 days (analysis)	14 days (extraction) 40 days (analysis)	180 days / Mercury 28 days	N/A	7 days
Groundwater	Container	40-mL vial (pre-tared)	1-L Amber	40-mL vial	1-L amber	1-L amber	1-L amber	1-L amber	N/A
	Quantity	3	2	3	1	1	1	1	N/A
	Preservative	N/A	H_2SO_4	N/A	N/A	N/A	HNO_3	N/A	N/A
	Holding Times	14 days (preserved) 7 days (non-preserved)	7 days (extraction) 40 days (analysis)	14 days (preserved) 7 days (non-preserved)	7 days (extraction) 40 days (analysis)	7 days (extraction) 40 days (analysis)	180 days / Mercury 28 days	7 days	N/A

Notes:
USEPA = U.S. Environmental Protection Agency
SW = USEPA Office of Solid Waste
SM = Standard Method
TPH = Total Petroleum Hydrocarbons
DRO = Diesel Range Organics
GRO = Gasoline Range Organics
ORO = Oil Range Organics
VOCs = Volatile Organic Compounds
SVOCs = Semi-volatile Organic Compounds
PCBs = Polychlorinated Biphenyls
TAL = Target Analyte List
N/A = Not Applicable
oz = Ounce
mL = Milliliter
L = Liter
H_2SO_4 = Sulfuric Acid
HNO_3 = Nitric Acid

Table 10-1
Key Personnel and Responsibilities
SWMU-8 RFI Work Plan
Holloman AFB, New Mexico
NationView Project No: 8080014.03

Name	Project Title/Assigned Role	Phone Numbers
Mr. David D. Martin	Corporate Sponsor	Cell: (205) 908-0731
Mr. Frank Gardner, P.G.	Project Manager	Cell: (303) 386-6454
Mr. Jim Moore, P.G.	Field Team Leader/ Senior Geologist	Cell: (303) 929-4840
Mr. John Hymer	Site Manager/SSHO	Cell: (575) 491-9171
Mr. Dustin McNeil, P.G.	Project Geologist	Cell: (303) 895-1963
Mr. Tony Lucero	Environmental Specialist	Cell: (575) 921-1899
Ms. Sally S. Smith, MHS, CIH, CHMM, CSP, CPEA	Health and Safety Manager	Office: (205) 918-4032

Notes:
P.G. = Professional Geologist
SSHO = Site Safety and Health Officer
MHS = Master of Health Science
CIH = Certified Industrial Hygienist
CHMM = Certified Hazardous Materials Manager
CSP = Certified Safety Professional
CPEA = Certified Professional Environmental Auditor

ATTACHMENT A

SWMU 8 RCRA FACILITY INVESTIGATION USACE SCOPE OF WORK

Section C - Descriptions and Specifications

Scope of Work
Holloman Air Force Base (AFB
U.S. air Force 49 CES/CEV
RCRA Facility Investigations (RFIs)
At
SWMU 8, SWMU 122, and SWMU 183,
Contract No. W912PL-07-D-0050 Task Order #DM01

14 May 2008
Revised 3 June 2008

1.0 GENERAL: The Contractor shall furnish all services, permits, materials, supplies, plant, labor, equipment, studies, superintendence, travel, and any and all other services as required in connection with the tasks contained in this scope of work (SOW). The Contractor, it's subcontractor(s) and appropriate employee(s) of each, hereinafter collectively called the "contractor", shall be responsible for obtaining and maintaining any registration or certification as required by the various Federal, State, and Local regulatory agencies, and any other registrations, certifications, licenses, permits, warrants, or other credentials or permissions required to perform the contracted tasks. The contractor shall obey all laws and regulations of the United States, the State of New Mexico, and the government agencies having jurisdiction over the activities in this SOW. The contractor is responsible for determining which laws and regulations apply to a particular task, although the Contracting Officer Representative (COR) may require additional legal or regulatory compliance as that person may determine is required.

2.0 PROJECT DURATION: The duration of this project is anticipated to be approximately 730 days.

3.0 PROJECT SITE SPECIFIC REQUIREMENTS:

3.1 SWMU 8, BUILDING 231-Oil Water Separator (KWRD076044)

Contractor shall prepare an RFI work plan to determine the nature and extent of soil and groundwater contamination extending under Buildings 231 and 232. Up to 40 locations will require soil and groundwater sampling for VOCs, SVOCs, TPH, TAL Metals, and PCBs using DPT. Many of the locations will be within the buildings where low overhead clearance will require specialized DPT equipment. The contractor will perform a risk assessment to include development of site-specific standards for identified contaminants of concern. A comprehensive RFI Report documenting the investigation and risk assessment is required

***3.2* SWMU 122, BUILDING 702- WASTE OIL TANK (KWRD076046)**

Contractor shall prepare an RFI Work Plan to delineate nature and extent of soil and groundwater contamination associated with the former waste oil tank. Up to 50 locations will require soil and groundwater sampling for VOCs, SVOCs, TPH, TAL Metals, and PCBs using DPT. Estimated depth to groundwater is 10 ft. Additionally, the contractor will perform a risk assessment to include development of site-specific standards for identified contaminants of concern. A comprehensive RFI Report documenting the investigation and risk assessment is required.

3.3 SWMU 183-Holloman AFB Sewer Lines (KWRD076048)

The contractor will implement an existing TRIAD RFI Work Plan that will assess the entire HAFB sanitary sewer line system (~23 miles of pipe) for releases to the environment (Phase I). The contractor shall perform soil and groundwater sampling at approximately 250 locations in the immediate proximity of the sewer lines in a phased approach using the sampling planning logic presented in the RFI Work Plan. Using DPT and/or conventional auger drilling, confirmation of releases (Phase II) to the environment will be initially determined by VOC analysis for soil and groundwater with NELAP certified onsite laboratory and additional nitrate and TDS analysis for groundwater. Due to slow recharge conditions at Holloman, groundwater samples will require the installation of temporary 1 inch PVC wells at approximately 170 locations. The investigation will be conducted using the TRIAD approach described on the EPA web site

http://www.epa.gov/tio/char.htm. TRIAD requires intense real time senior oversight and real-time correspondence with all stakeholders, especially the regulatory community. Contractor will perform ~~a risk assessment to include development of site-specific standards for identified contaminants of concern. A comprehensive RFI Report documenting the investigation and risk evaluation is required.~~ Phase I and II of the investigation and provide a draft and final Data Summary Report which will report on all contaminant detections and confirmation. The Data Summary Report shall also include recommendations for necessary further study to delineate any detected contaminants. Phase III investigations (Optional item 1) will address plume delineation. Phase IV (Optional Item 2) will address receptors and pathways and evaluate associated risk in the form of a risk assessment. The RFI (draft and final) Reports will be Optional Item 3.

4.0 PROJECT TASKS. The contractor shall prepare two (2) separate work plans, one for SWMU 8 and one for SWMU 122. The workplans for SWMU 183 have already been generated and accepted by the 49 CES/CEV. The draft and final workplans will be prepared in WORD and submitted for review and approval by 49 CES/CEV prior to initiation of field work. The contractor shall submit a proposed schedule for approval within 14 days of award. Following approval of the schedule and workplans, the contractor shall proceed with the execution of all field activities, Upon completion of field activities and receipt of analytical, the contractor shall prepare and submit a draft and final RFI Reports for SWMU 8 and 122, that will include a risk assessment. The lateral and vertical extent of contamination, risk assessment and RFI Report for SWMU 183 are optional items 1 through 3,described in Sections 9.0, 10.0 and 11.0 of this scope of work.

4.1 Schedule. The contractor will provide a proposed schedule for the 49 CES/CEV review and approval within two (2) weeks after contract award.

4.2 Workplans. The contractor shall prepare two (2) separate workplans, one for SWMU 8 and one for SWMU 122. The workplans shall be similar to those previously prepared for SWMU investigations, and shall include, but not be limited to a Sampling and Analysis Plans (SAP), Health and Safety Plan (HASP), and Quality Control Plan (QAP). The individual plans shall describe in sufficient detail all planned project activities including methods, equipment, sample locations, sample handling, chemical analysis, and other necessary information to comply with the requirements of a RCRA Facility Investigation. The contractor shall determine the appropriate guidance and ARARs and seek concurrence from the 49 CES/CEV or USACE Project Manager.

4.3 Fieldwork. The contractor will execute the field investigation activities in accordance with the approved workplans discussed in paragraph 4.2 and the previously prepared workplan for SWMU 183 (Phase I and II), and in compliance with all applicable regulatory guidance, laws, and procedures. The field activities must comply with OSHA and Corps of Engineers Safety Manual EM 385-1-1.

4.4 RFI Reports. The RFI reports must contain sufficient detail to be able to achieve regulatory concurrence regarding extent of contamination and sufficient risk analysis to determine that no further action is required if appropriate.

5.0 PERFORMANCE OF WORK. The contractor in performance of the work shall adhere to the following guidelines:

5.1 The contractor shall furnish sufficient technical, supervisory and administrative personnel at all times to ensure the work if performed in accordance with the delivery schedule. Professional level skills and management practices are required in the performance of this contract. Accordingly, the contractor shall establish an effective Quality Control program to assure that the end product meets professional standards and complies with the contractual requirements.

5.2 Meetings/conference calls shall be held when requested by the 49 CES/CEV, the contractor, or the USACE Contracting Officer (CO) for discussion of questions and problems relating to the work required under the contract. The contractor, its subsidiaries, affiliates or associates shall not release any information regarding the project to technical societies, news media or the general public without first obtaining permission.

6.0 PROJECT MANAGEMENT:.

6.1 Communication and Meetings. The contractor shall maintain file records of all communications throughout the project duration. Included will be records of conferences, meetings, discussions, directions, agreements, conversations, site visits, facsimile transmissions, letters, submittals, and any other forms of communication participated in by the contractor pertinent to the project. The records shall identify personnel involved, date, times, subjects, conclusions, directives, and action taken. All work shall be accomplished with adequate internal controls and review procedures, which will eliminate conflict, errors, omission and ensure technical accuracy.

6.1.1 Government Managers. The Government's Contracting Officer is Theresa Armijo at (505) 342-3458. The Holloman Air Force Base, 49 CES/CEV Project Manager is David Scruggs at (575) 572-3931.The USACE Project Manager is Carol Wies, (505) 342-3477. The 49 CES/CEV will assume inspector duties to ensure field work and reporting are technically adequate; any contract changes, modifications, etc. must be approved by the USACE CO listed above.

7.0 DOCUMENTS:

7.1 Required Documents. As indicated above the documents

The deliverable documents described in this SOW shall be considered "Draft" in the sense that they have not yet been reviewed and/or accepted by the members of the technical review team or the CO. The reviewers will be determined by the 49 CES/CEV lead, and may include reviewers from, USACE , NMED, CES/CEV and other regulatory agencies. Each draft document shall be reviewed and accepted prior to proceeding. In all aspects "Draft", "Draft-Final" and "Final" reports shall be complete, and be free of engineering, grammatical and typographical errors. All documents shall have the project title, site name, site location, state of document (draft, final, etc.), contract number, date, on the cover sheet and any binders included in the submittals. All maps, drawings and associated data shall be provided in AutoCADD (*.dwg) format. The final report shall be provided on diskette in MS Word for Windows format.

7.1.1 Review. The contractor shall comply with the review process as outlined below. The CES/CEV, USACE, NMED and/or EPA may furnish the contractor review comments on the submittals at the various milestones. The contractor shall comply with the review comments in the development of documents for the next milestone. If any review comment requires clarification and/or amplification to assure compliance, the contractor shall verbally notify the Project Coordinator(s). After each review, the contractor will be furnished comments to be annotated and returned to the Government. Comments shall be annotated with a C-Concur, D-Do not concur, E-Exception, or X-Delete. Comments annotated with a D, E or X must be documented

Changes in work as a result of review comments will not be considered a change to the task order unless significant change in scope is involved.

8.0 DOCUMENT AND INVOICE SUBMITTALS:

All submittals under this contract including submittals, invoices, and records of correspondence shall be submitted to:

Carol Wies
Albuquerque District Corps of Engineers
CESPA-PM-M
4101 Jefferson Plaza NE
Albuquerque, NM 87109

Report and Workplan submittals shall be provided to:

David Scruggs – 49 CES/CEV
550 Tabosa Ave
Holloman Air Force Base, NM 88330

9.0 OPTION ITEM 1: SWMU 183, Phase III investigations will address plume delineation.
The contractor shall implement an existing TRIAD RFI Work Plan to perform contaminant delineation. Using DPT and/or conventional auger drilling, vertical and lateral extent of contaminants detected and confirmed in Phase I and II shall be established for each contaminant plume in soil and/or groundwater as applicable. Due to slow recharge conditions at Holloman, groundwater samples will require the installation of temporary 1 inch PVC wells. The investigation will be conducted using the TRIAD approach described on the EPA web site http://www.epa.gov/tio/char.htm. TRIAD requires intense real time senior oversight and real-time correspondence with all stakeholders, especially the regulatory community.

FOR ESTIMATING PURPOSES THE CONTRACTOR SHALL ASSUME PHASE III DELINEATION WILL REQUIRE THE FOLLOWING:

1. 120 LOCATIONS FOR THE INSTALLATION OF 1 INCH TEMPORARY WELLS WITH AN AVERAGE DEPTH OF 25 FEET USING DIRECT PUSH TECHNOLOGY. PROVIDE COST PER FOOT OF DRILLING TO INCLUDE LABOR AND MATERIALS FOR INSTALLATION AND SAMPLING OF WELLS.
2. 50 LOCATIONS FOR THE INSTALLATION OF 2 INCH TEMPORARY WELLS WITH AN AVERAGE DEPTH OF 40 FEET USING HOLLOW STEM AUGER. PROVIDE COST PER FOOT OF DRILLING TO INCLUDE LABOR AND MATERIALS FOR INSTALLATION AND SAMPLING OF WELLS.
3. PROVIDE ANALYTICAL COST ASSOCIATED WITH THE WELL INSTALLATION AS PER THE WORK PLAN.

10.0 OPTION ITEM 2: SWMU 183, Phase IV will address receptors and all pathways and evaluate associated risk in the form of a risk assessment. The contractor will perform a risk assessment to include development of site-specific standards for identified contaminants of concern.

FOR ESTIMATING PURPOSES THE CONTRACTOR SHALL ASSUME PHASE IV WILL REQUIRE THE FOLLOWING:

1. COLLECTION OF UP TO 30 AMBIENT AIR SAMPLES UTILIZING SUMMA CANNISTERS INSIDE AFFECTED BUILDINGS. PROVIDE COST FOR LABOR MATERIALS FOR SAMPLE COLLECTION AND ANALYSIS.
2. PERFORMANCE OF RISK BASED EVALUATION USING VAPOR INHALATION AND DERMAL EXPOSURE PATHWAY. ASSUME FIFTEEN SEPARATE AND DISTINCT AREAS WILL REQUIRE RISK EVALUATION AND PROVIDE UNIT COST PER AREA.

11.0 OPTION ITEM 3: The SWMU 183 RFI (draft and final) Report will be Optional Item 3.
The Contractor shall prepare an RFI Report that defines the work performed to determine the nature and extent of soil and groundwater contamination at SWMU 183. The report shall describe the number of pushes executed at each location, the soil and groundwater sampling results for for VOCs, SVOCs, TPH, TAL Metals, and PCBs. A comprehensive RFI Report documenting the investigation and risk assessment prepared under Option Item 2 is required.

ATTACHMENT B

GEOPROBE SYSTEMS®

TECHNICAL BULLETIN NO. MK3138

~~ATTACHMENT B~~

~~H&P MOBILE GEOCHEMISTRY~~

~~SUB-SLAB SOIL VAPOR STANDARD OPERATING PROCEDURE~~

GEOPROBE® DT325 DUAL TUBE SAMPLING SYSTEM

STANDARD OPERATING PROCEDURE

Technical Bulletin No. MK3138

PREPARED: November, 2006

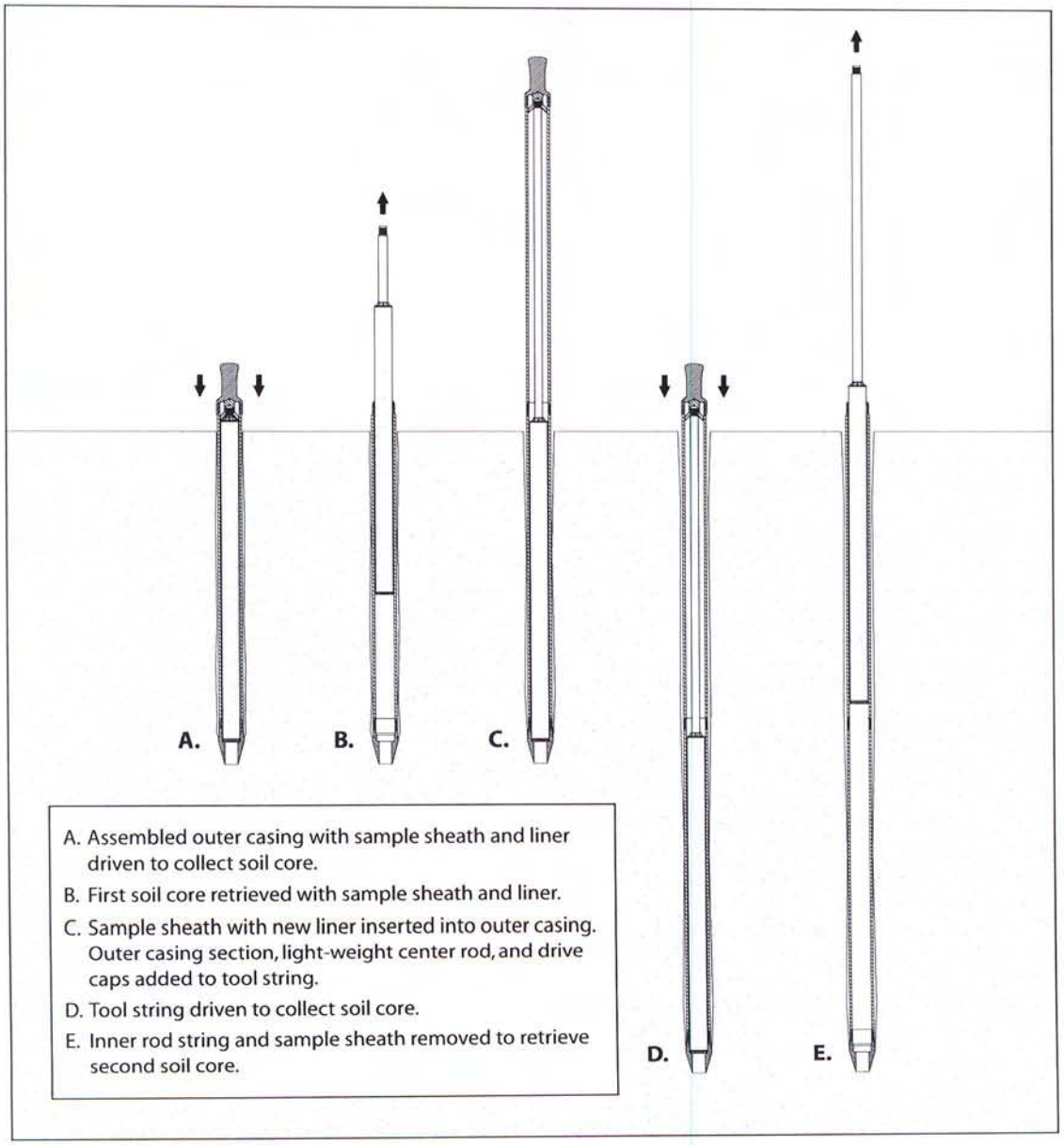

Collecting soil cores with the DT325 Dual Tube Sampling System.

Geoprobe Systems®

Geoprobe® and Geoprobe Systems®, Macro-Core®, and Direct Image® are Registered Trademarks of Kejr, Inc., Salina, Kansas

©2006 Kejr, Inc.
ALL RIGHTS RESERVED
No part of this publication may be reproduced or transmitted in any form or by any means, electronic or mechanical, including photocopy, recording, or any information storage and retrieval system, without written permission from Kejr, Inc.

1.0 Objective

The objective of this procedure is to collect a representative soil sample at depth through an enclosed casing and recover it for visual inspection and/or chemical analysis.

2.0 Background

2.1 Definitions

Geoprobe®*: A brand name of high quality, hydraulically-powered machines that utilize both static force and percussion to advance sampling and logging tools into the subsurface. The Geoprobe® brand name refers to both machines and tools manufactured by Geoprobe Systems®, Salina, Kansas. Geoprobe® tools are used to perform soil core and soil gas sampling, groundwater sampling and testing, soil conductivity and contaminant logging, grouting, and materials injection.

**Geoprobe® and Geoprobe Systems® are registered trademarks of Kejr, Inc., Salina, Kansas.*

DT325 Dual Tube Sampling System: A direct push system for collecting continuous core samples of unconsolidated materials from within a sealed casing of Geoprobe® 3.25-inch (83 mm) OD probe rods. Samples are collected and retrieved within a sample sheath and liner that is threaded onto the leading end of a string of Geoprobe® 1.25-inch (32 mm) OD light-weight center rods and inserted to the bottom of the outer casing. Collected samples measure up to approximately 2,600 ml in volume in the form of a 1.85-inch x 59-inch (47 mm x 1499 mm) core when using common equipment options.

Liner: A 2.1-inch (53 mm) OD thin-walled, PVC tube that is inserted into the outer casing on the leading end of the inner rod string for the purpose of containing and retrieving core samples. Liners are available in two configurations; a simple open tube or a tube with a core catcher permanently attached to the leading end. Nominal liner lengths include 1 meter, 48 inches, and 60 inches.

***Nominal liner length identifies the length of tools with which the liner is used. The actual end-to-end lengths of the various DT325 liners will differ from the specified nominal lengths.*

Core Catcher: A dome-shaped device positioned at the leading end of a liner to prevent loss of collected soil during retrieval of the liner and soil core. Flexible fingers at the top of the core catcher are pushed outward by soil entering the liner during advancement of the tool string. As the filled liner is subsequently retrieved, the fingers of the core catcher move back inward, effectively closing off the end of the liner and limiting soil loss. The core catcher designed for the DT325 system is made of PETG material and is permanently fused to the liner.

2.2 Discussion

Dual tube sampling gets its name from the fact that two sets of probe rods are used to retrieve continuous soil core samples from the subsurface. One set of rods is driven into the ground as an outer casing (Fig. 2.1). These rods receive the driving force from the hammer and provide a sealed casing through which soil samples may be recovered. The second, smaller set of rods are placed inside the outer casing with a sample liner attached to the leading end of the rod string (Fig. 2.1). These smaller rods hold the liner in place as the outer casing is driven to fill the liner with soil. The inner rods are then retracted to retrieve the full liner.

Standard Geoprobe® 3.25-inch OD probe rods provide the outer casing for the DT325 Dual Tube Soil Sampling System. A cutting shoe is threaded into the leading end of the rod string. When driven into the subsurface, the cutting shoe shears a 1.75- or 1.85-inch OD soil core (depending on cutting shoe option) which is collected inside the casing in a clear plastic liner.

The second set of rods in the DT325 dual tube system are Geoprobe® 1.25-inch OD light-weight center rods. A sample sheath with PVC liner is attached to the end of these smaller rods and then inserted into the casing. The 1.25-inch light-weight center rods hold the sample sheath tight against the cutting shoe as the outer casing is driven to collect the soil core. Once filled with soil, the sample sheath and liner are removed from the bottom of the outer casing by lifting out the 1.25-inch center rod string.

The outer, 3.25-inch probe rods provide a cased hole through which to sample. The main advantage of sampling through a cased hole is that there is no side slough to contend with. In addition, the outer casing effectively seals the probe hole when sampling through perched water tables. These factors mean that sample cross-contamination is eliminated. The DT325 sampling system is therefore ideal for continuous coring in both saturated and unsaturated zones.

Solid Drive Tip

A Solid Drive Tip (28509 or 27763) can be placed on the leading end of the inner 1.25-inch rod string in place of a sample sheath and liner (Fig. 2.2). When installed in the outer casing, the drive tip firmly seats within the cutting shoe and effectively seals the tool string as it is driven into the subsurface. This enables the operator to advance the outer casing to the bottom of a pre-cored hole or through undisturbed soil to reach the top of the sampling interval.

Grouting

The DT325 system allows bottom-up grouting through the primary tool string. This means that a cement or bentonite grout mix can be pumped through the outer casing as it is withdrawn from the ground. This is in contrast to most other soil samplers which require driving a second set of tools back down the probe hole in order to deliver the grout mix.

Monitoring Well Installation

An expendable cutting shoe enables the operator to install a Geoprobe® prepacked screen monitoring well through the outer casing of the DT325 Dual Tube System. After the collection of continuous soil cores to the desired depth, prepacked screens can be inserted to the bottom of the outer casing on the leading end of a PVC riser string. The well is finished, complete with grout barrier, bentonite well seal, and a high-solids bentonite slurry/neat cement grout, during retrieval of the outer casing.

Groundwater and Soil Gas Profiling

The DT325 system can be combined with a simple screen to conduct vertical profiling of groundwater or soil gas quality through the leading end of the outer casing. Utilizing the Geoprobe® Groundwater Profiler (Geoprobe® 2003) with the DT325 system provides access to groundwater or soil gas (Geoprobe® 2006) at multiple depths in a single push. In addition, hydraulic conductivity testing may be performed through the groundwater profiler tool string with the Geoprobe® Pneumatic Slug Test Kit (Geoprobe® 2005).

A DT325 Drivable Profiler Head (21379) adapts the groundwater profiler to the inner 1.25-inch rod string of the DT325 system. The profiler head is machined to fit within the DT325 cutting shoe. An O-ring on the profiler head provides a watertight seal to prevent groundwater flow into the outer casing when conducting slug tests through the groundwater profiler screen.

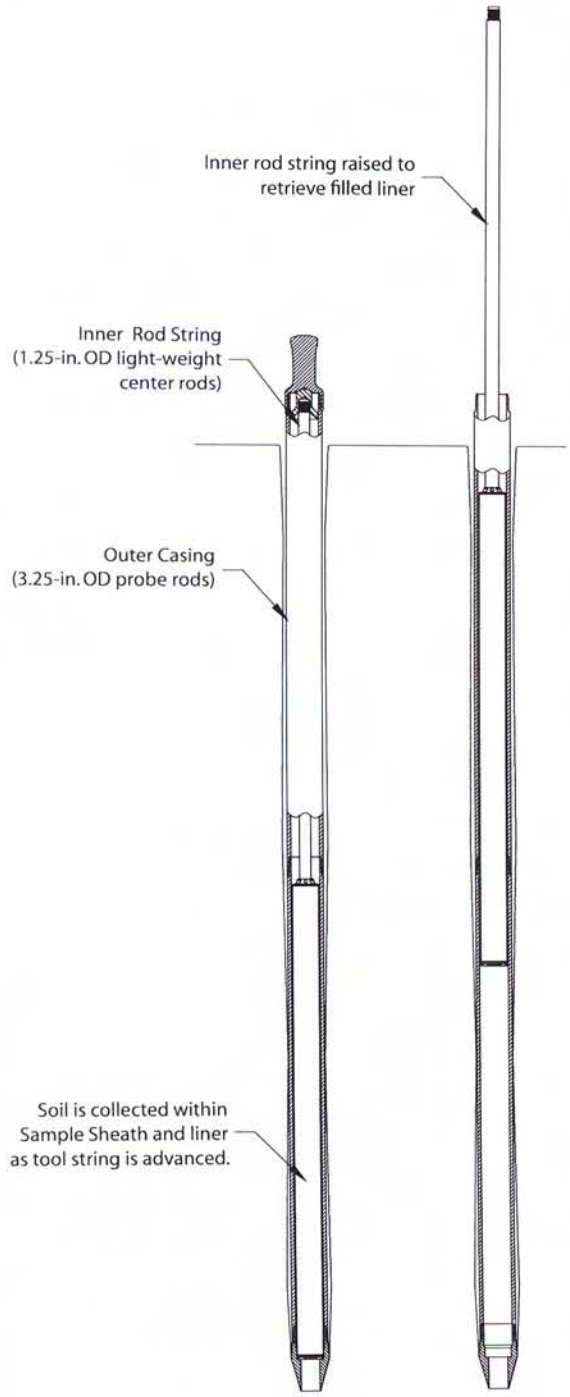

Figure 2.1
Outer casing driven with sample sheath and liner.

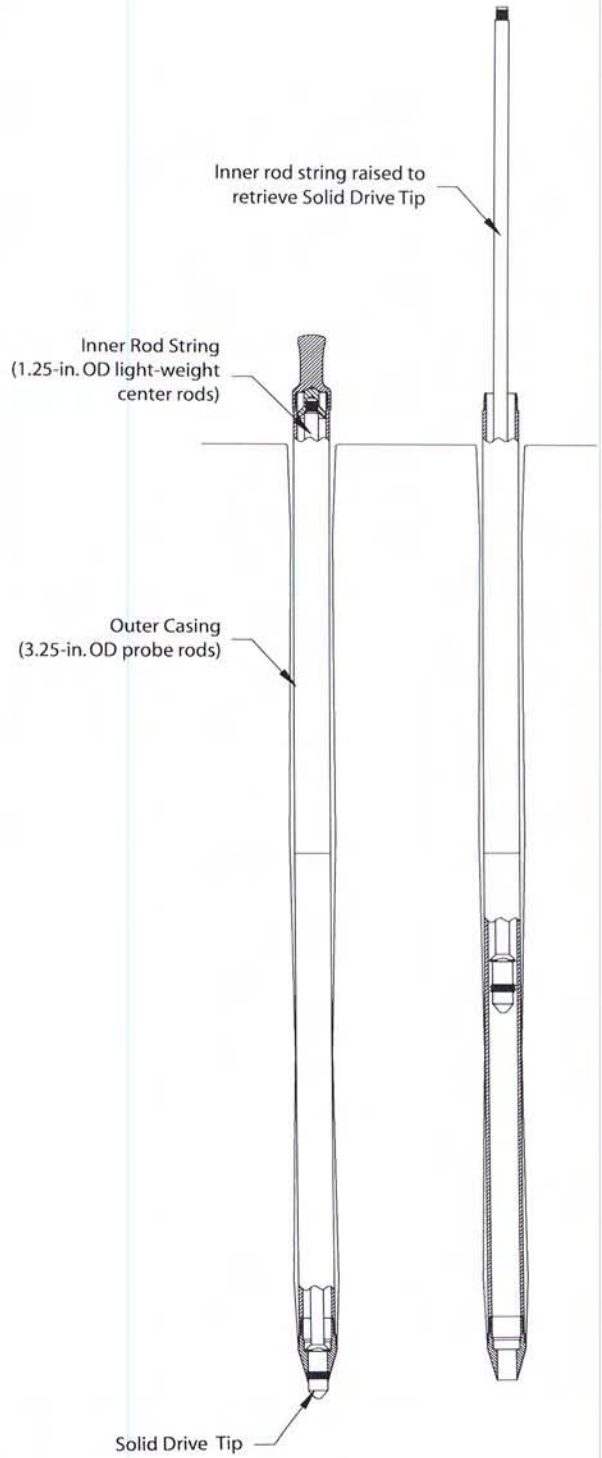

Figure 2.2
Outer casing driven with solid drive tip.

3.0 Tools and Equipment

The following equipment is required to operate the DT325 Dual Tube Sampling System. Refer to Figure 3.1 for identification of the specified parts.

DT325 Sampler Parts*	Quantity	Part Number
DT325 Sheath Drive Head	-1-	10212
DT325 Sample Sheath, 72-in. length	-1-	26805
DT325 Sample Sheath, 60-in. length	-1-	26719
DT325 Sample Sheath, 48-in. length	-1-	27711
DT325 Sample Sheath, 1-m length	-1-	27712
DT325 Cutting Shoe, standard, 1.85-in. ID	-1-	28508
DT325 Cutting Shoe, optional, 1.75-in. ID	-1-	26720
DT325 Expendable Cutting Shoe Holder	-1-	28339
DT325 Expendable Cutting Shoe, 1.75-in. ID	-1-	28341
DT325 Solid Drive Tip, for standard (28508) cutting shoe	-1-	28509
DT325 Solid Drive Tip, for optional cutting shoe (28341) and expendable cutting shoe (26720)	-1-	27763
Replacement O-rings, for DT325 solid drive tips (28509 and 27763), pkg. of 25	Variable	13942
DT325 Liner Retainer	-1-	26718
O-rings, for DT325 liner retainer (26718), pkg. of 25	Variable	28379
DT325 Liner Retainer, without O-ring groove	-1-	31039
DT325 Liner Retainer Wrench	-1-	27838

DT325 Liners and Accessories	Quantity	Part Number
DT325 Liner Spacer, pkg. of 21	Variable	29609K
DT325 Liner Spacer Head	-1-	29358
DT325 PVC Liner, 60-in. length, box of 43	Variable	DT3260K
DT325 PVC Liner, 48-in. length, box of 43	Variable	DT3248K
DT325 PVC Liner, 1-m length, box of 43	Variable	DT3239K
DT325 PVC Liner with Core Catcher, 60-in. length, box of 43	Variable	27813
DT325 PVC Liner with Core Catcher, 48-in. length, box of 43	Variable	27814
DT325 PVC Liner with Core Catcher, 1-m length, box of 43	Variable	27815
DT325 Vinyl End Caps, pkg. of 84 (42 pair)	Variable	17762
DT325 Liner Cutter	-1-	26155
Universal Liner Holder	-1-	22734

Probe Rods and Accessories*	Quantity	Part Number
GH60 Threadless Drive Cap, 3.25-in. rods**	-1-	9742
Pull Cap, 3.25-in. rods	-1-	13257
Probe Rod, 3.25-in. OD x 60-in. length	Variable	9040
Probe Rod, 3.25-in. OD x 48-in. length	Variable	10594
Probe Rod, 3.25-in. OD x 1-m length	Variable	13925
Probe Rod, 3.25-in. OD x 12-in. length	-1-	13672
Replacement O-rings, for 3.25-in. probe rods, pkg. of 25	Variable	9960
Centering Drive Cap, 1.25-in. rods	-1-	12943
Pull Cap, 1.25-in. rods	-1-	AT1204
Light-Weight Center Rod, 1.25-in. OD x 60-in. Length***	Variable	27600
Light-Weight Center Rod, 1.25-in. OD x 48-in. Length***	Variable	21900
Winch Pull Plate, 1.5-in. rods (also works with 1.25-in. OD rods)	-1-	18274
Adjustable Rod Clamp	-1-	27216

Optional Accessories	Quantity	Part Number
DT325 Adapter for Hydraulic Liner Extruder	-1-	24959
DT325 Plunger for Hydraulic Liner Extruder	-1-	23977
Rod Grip Handle, GH60 Hammer, 3.25-in. rods	-1-	9757
Rod Grip Handle, GH60 Hammer, 1.5-in. and 1.25-in. rods	-1-	15554
Rod Wiper Donuts, 3.25-in. Rods	-1-	27194
Rod Wiper Weldment	-1-	23633

* Select DT325 Sample Sheath and liner lengths to match length of probe rods.
** A 3.25-inch probe rod drive cap is also available for use with GH40 Series hammers.
*** 1.25-inch OD probe rods may be substituted for Light-Weight Center Rods.

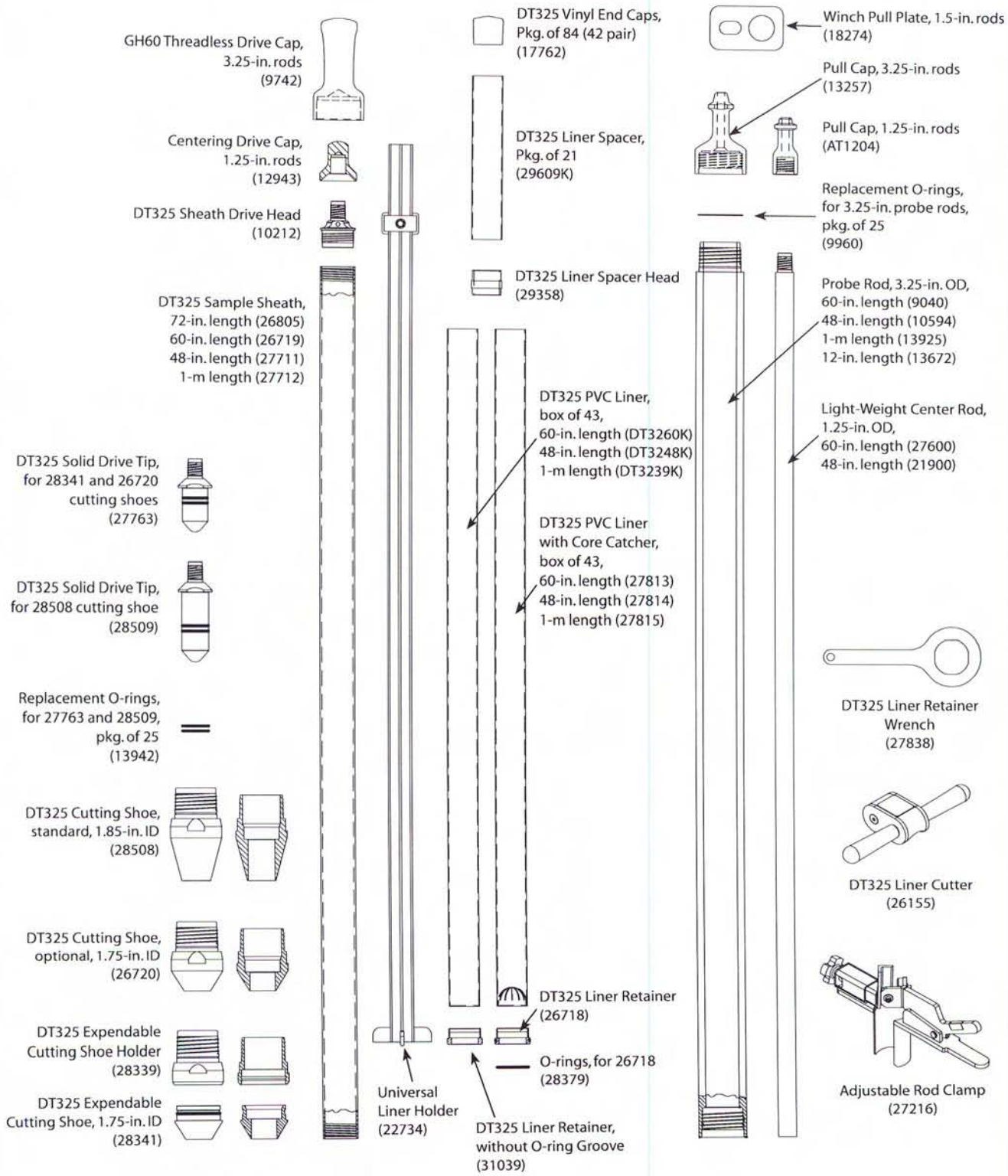

Figure 3.1
DT325 parts and accessories.

3.1 Tool Options

This section identifies the specific tool options available for use with the DT325 Dual Tube System. Refer to Figure 3.1 for illustrations of the specified parts.

Probe Rods

Standard Geoprobe® 3.25-inch (83-mm) OD probe rods are utilized for the outer casing of the DT325 Sampling System. Nominal rod lengths include 1 meter, 48 inches, and 60 inches. The specific length of rods may be selected by the operator and will determine the length of tooling for the rest of the DT325 system.

1.25-inch Light-Weight Center Rods

1.25-inch Light-weight center rods (1.25-inch / 32-mm OD) are recommended for the inner rod string of the DT325 system when utilizing an outer casing of 48- or 60-inch long rods. Choose the light-weight rod length that matches the length of rods used for the outer casing (48-inch light-weight rods with 48-inch outer casing, etc.). Currently, 1.25-inch light-weight center rods are not available in 1-meter lengths. Standard Geoprobe® 1.25-inch x 1-meter probe rods must be used with 3.25-inch x 1-meter outer casing.

A weight reduction of up to 64% is provided by the 1.25-inch light-weight center rods over standard 1.25-inch probe rods. As a result, considerably less energy is expended when retrieving the light-weight center rods from within the outer casing during operation of the DT325 Dual Tube System.

Sample Sheaths

A steel sample sheath supports the weight of the inner rods to protect the sample liner from damage while advancing the DT325 tool string. The liner is placed within the sheath and secured with a drive head at the top of the sheath and a liner retainer at the bottom. The assembled sheath with liner is inserted to the bottom of the outer casing on the leading end of the inner rod string (light-weight rods). After advancing the entire tool string one sample interval, the inner rods and sample sheath are retrieved to recover the soil core.

Sample sheaths are available in nominal lengths of 1 meter, 48 inches, 60 inches, and 72 inches. Sample sheath length is generally matched to the length of the probe rods selected for the outer casing. However, a DT325 Liner Spacer (29609K) and DT325 Liner Spacer Head (29358) allow use of 48-inch liners with a 60-inch Sample Sheath (26719) and 60-inch liners with a 72-inch Sample Sheath (26805).

Sample Liners

Sample liners are made of a heavy-duty clear PVC for convenient inspection of the soil sample. Liners are available either as a simple, open tube or with an intergral core catcher. Utilize the core catcher liners when sampling flowing sands, noncohesive soils, extremely dry soils, or any other materials that fall from the liner during retrieval.

Nominal liner lengths include 1 meter, 48 inches, and 60 inches with an OD of 2.1 inches (53 mm). Under "normal" sampling conditions, liner length should correspond to the length of probe rods used for the outer casing. Certain sampling conditions can cause over-filled liners which may lead to problems removing the liner and soil core from the sample sheath. For these special conditions, utilize a Liner Spacer (29609K) and DT325 Liner Spacer Head (29358) to provide additional room above the liner for the excess soil (Fig. 3.2). The liner spacer and liner spacer head must be used with either a 48-inch liner in a 60-inch Sample Sheath (26719) or a 60-inch liner in a 72-inch Sampler Sheath (26805). With the tool string only advanced the length of the liner, the liner spacer remains free to accept excess soil that may otherwise overfill the liner.

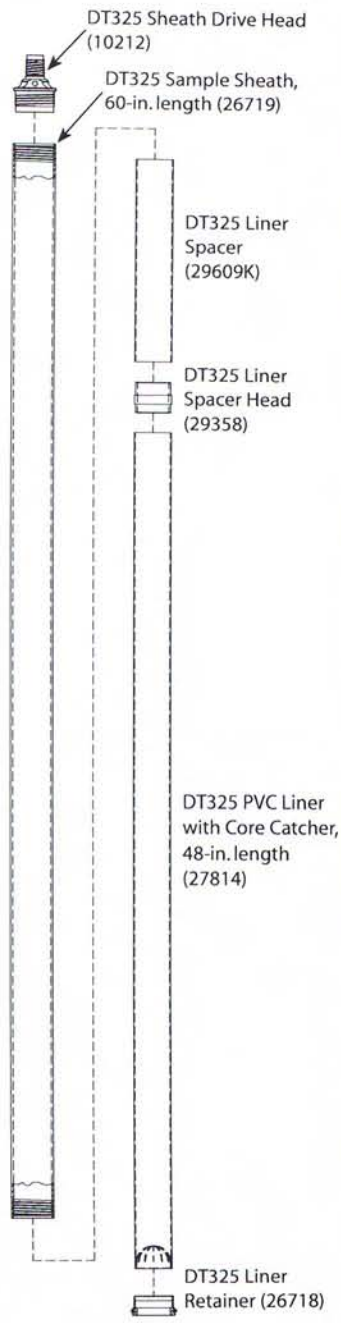

Figure 3.2
Common tooling configuration for use of DT325 Liner Spacer.

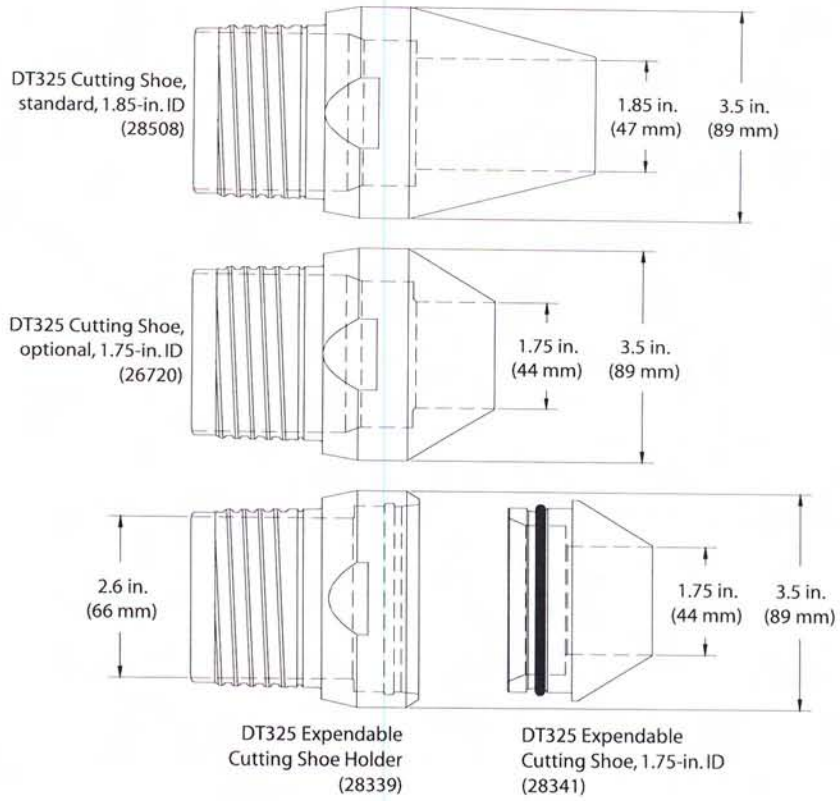

Figure 3.3
Cutting shoe options for the DT325 Dual Tube Sampling System.

Cutting Shoes

Three cutting shoes are available for use with the DT325 Dual Tube System (Fig. 3.3). The DT325 Standard Cutting Shoe (28508) and DT325 Optional Cutting Shoe (26720) thread into the leading end of the 3.25-inch probe rods and are recovered after sampling. Dimensions for the standard cutting shoe are 1.85 inches (47 mm) ID and 3.5 inches (89 mm) OD. The optional cutting shoe also has an OD of 3.5 inches (89 mm), but the ID is only 1.75 inches (44 mm). The standard cutting shoe is ideal for sampling plastic clays and saturated sands while the optional cutting shoe is designed for use in formations where a smaller-diameter soil core is beneficial to sample recovery.

The DT325 sampling system may also employ an expendable cutting shoe (Fig. 3.3). In this arrangement, a DT325 Expendable Cutting Shoe Holder (28339) is threaded into the leading end of the outer casing. A DT325 Expendable Cutting Shoe (28341) is then inserted into the holder. Upon completion of soil sampling, the outer casing is withdrawn slightly. The expendable cutting shoe is knocked from the holder, leaving an open casing through which a prepacked screen monitoring well may be installed. Dimensions for the expendable cutting shoe are the same as the optional cutting shoe (ID = 1.75 in. (44 mm) and OD = 3.5 in. (89 mm)).

4.0 Operation

4.1 Decontamination

Before and after each use, thoroughly clean all parts of the soil sampling system according to project requirements. Parts should also be inspected for wear or damage at this time. During sampling, a clean new liner is used for each soil core.

4.2 Operational Overview

The DT325 Soil Sampling System is designed to collect continuous soil cores. Sampling may begin either from ground surface or a predetermined depth below ground. Once sampling begins, consecutive soil cores are removed as the outer casing is advanced to greater depths

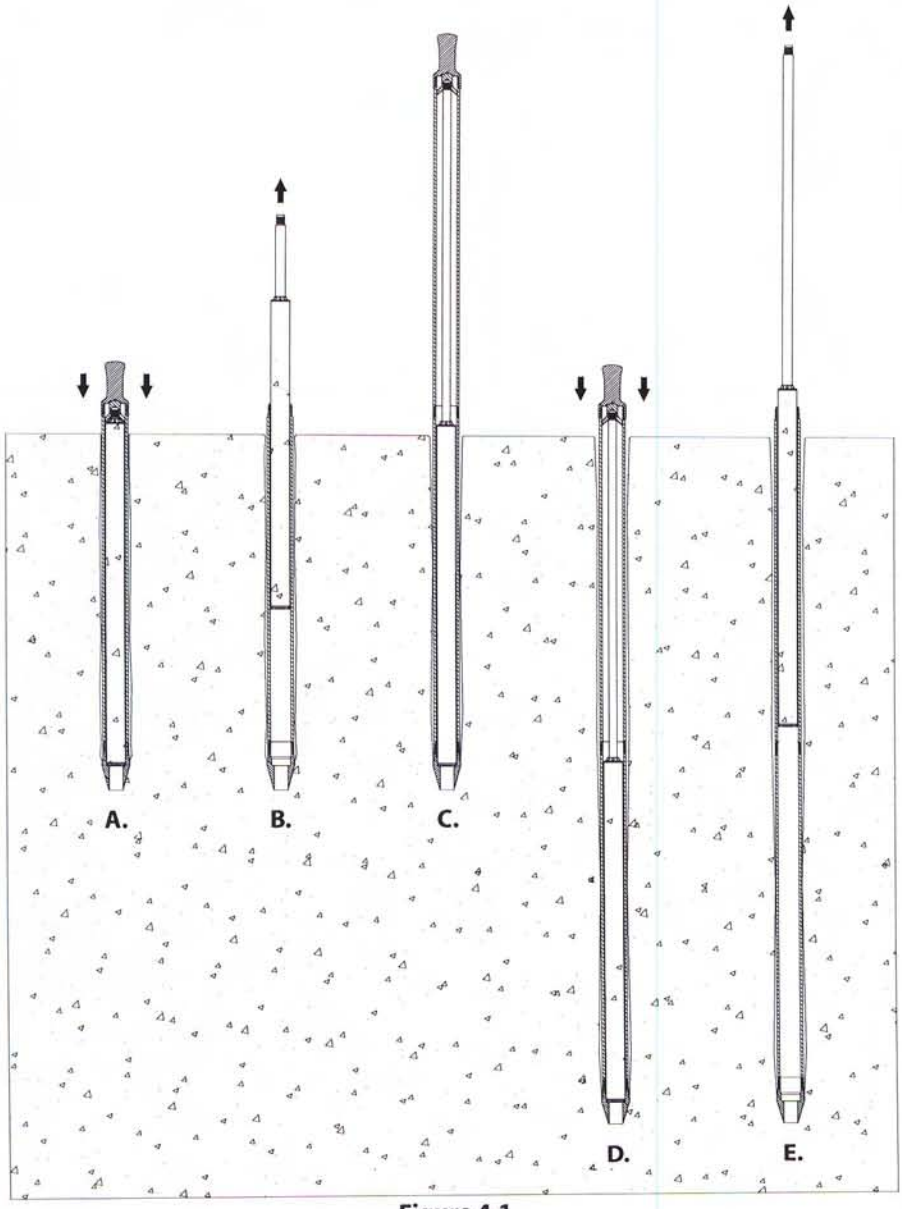

Figure 4.1
Continuous core sampling from ground surface with the DT325 system.

When sampling is to begin at the ground surface, the first soil core is generally collected using a liner with core catcher to maximize sample recovery (Fig. 4.1-A). This is especially true when the first core is composed of dry, loose soil. Upon retrieval of the first liner and soil core (Fig. 4.1-B), a new liner is loaded into the sample sheath and inserted to the bottom of the outer casing on the end of an inner rod. A section of outer casing is added to the tool string (Fig. 4.1-C) and the entire tool string is driven to fill the liner with soil (Fig. 4.1-D). The sample sheath and filled liner are removed from the outer casing to retrieve the second soil core (Fig. 4.1-E). A new liner is placed in the sample sheath and the process is repeated for the entire sampling interval.

When the sampling interval begins at some depth below ground surface, a DT325 Solid Drive Tip is installed in the outer casing and the entire assembly is driven from ground surface directly through undisturbed soil (Fig. 4.2-A). This enables the operator to reach the top of the sampling interval without stopping to remove unwanted soil cores. Once the interval is reached, the solid drive tip is removed (Fig 4.2-B) and sampling continues as described in the preceding paragraphs (Fig. 4.2-C, Fig. 4.2-D, and Fig. 4.2-E).

Specific instructions for assembly and operation of the DT325 Sampling System are given in the following sections.

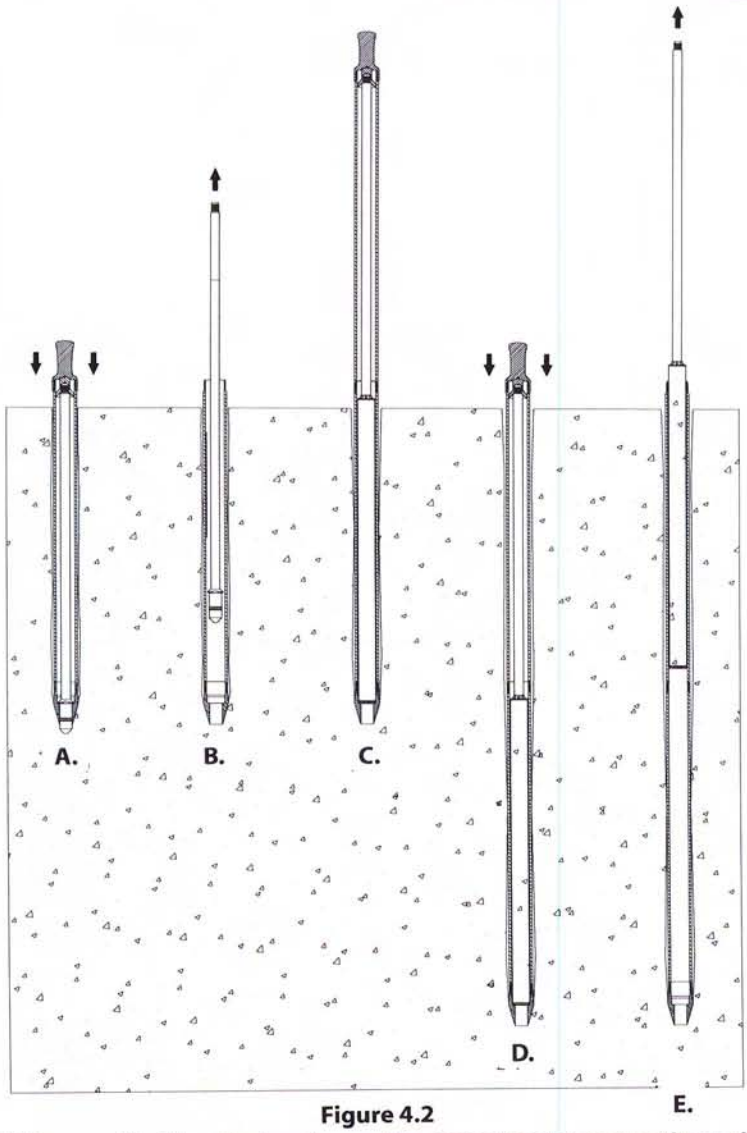

Figure 4.2
Using a solid drive tip to advance the DT325 outer casing through undisturbed soil before collecing soil cores.

4.3 Assembling and Driving the Outer Casing Using a DT325 Solid Drive Tip

A solid drive tip enables the operator to advance the outer casing to the bottom of a pre-cored hole or through undisturbed soil to reach the top of the sampling interval. The outer casing is assembled first, followed by the 1.25-in. light-weight center rod system with a solid drive tip. Step by step instructions are listed below.

1. When using a DT325 Standard (28508) or Optional (26720) Cutting Shoe, install an O-ring (9960) at the base of the theads as shown in Figure 4.3. If using an expendable cutting shoe, install an O-ring (9960) on the DT325 Expendable Cutting Shoe Holder (28339) and one o-ring (6834) on the DT325 Expendable Cutting Shoe (28341).

2. Thread the DT325 Cutting Shoe or DT325 Expendable Point Holder onto the leading end of a 3.25-inch OD Probe Rod. Completely tighten the cutting shoe or cutting shoe holder using a pipe wrench.

3. Install an O-ring (13942) in both grooves of the DT325 Solid Drive Point (27763 or 28509).

4. Thread the solid drive point into the female end of a 1.25-inch light-weight center rod.

5. Lubricate the O-rings on the solid drive point with a small amount of deionized water. Insert the point and probe rod into the outer casing until the point partially extends from the bottom of the cutting shoe.

6. Place a Centering Drive Cap (12943) on top of the 1.25-inch light-weight center rod and a GH60 Threadless Drive Cap (9742) onto the 3.25-inch probe rod (outer casing) as shown in Figure 4.5.

7. Raise the probe unit hammer assembly to its highest position by fully extending the probe cylinder.

8. Position the assembled outer casing section directly under the hammer with the cutting shoe centered between the toes of the probe foot. The assembled outer casing section should now be parallel to the probe derrick. Step back from the unit and visually check sampler alignment. A magnetic level can be placed on the assembly to check level.

9. Apply static weight and hammer percussion to advance the assembled outer casing until the drive head reaches the ground surface.

   NOTE: Activate hammer percussion whenever collecting soil. Percussion helps shear the soil at the leading end of the sampler so that it moves into the sample tube for increased recovery.

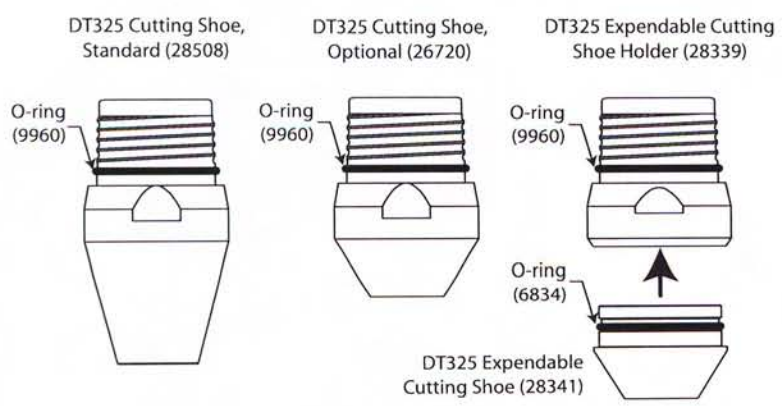

Figure 4.3
DT325 Cutting Shoes Utilize O-ring Seals

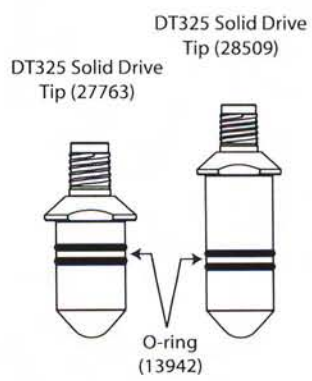

Figure 4.4
Solid Drive Points Utilize Two O-rings

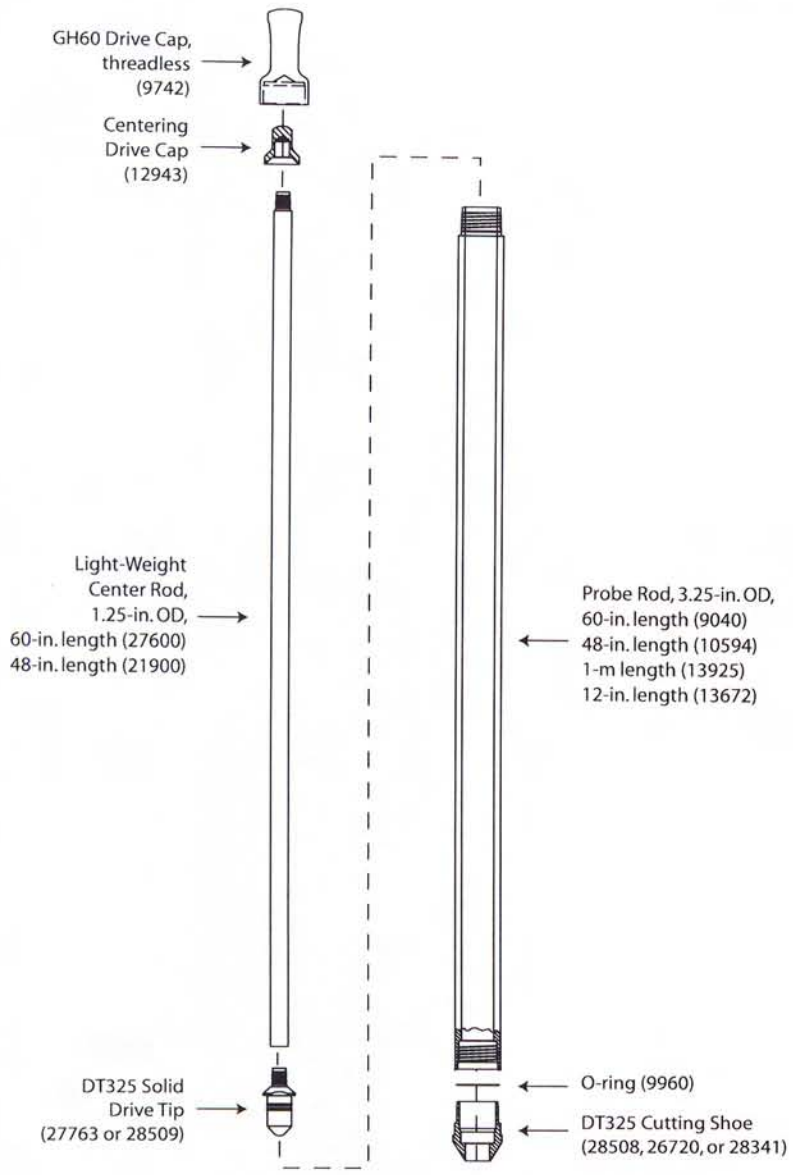

Figure 4.5
Assembly Using the DT325 Solid Drive Tip

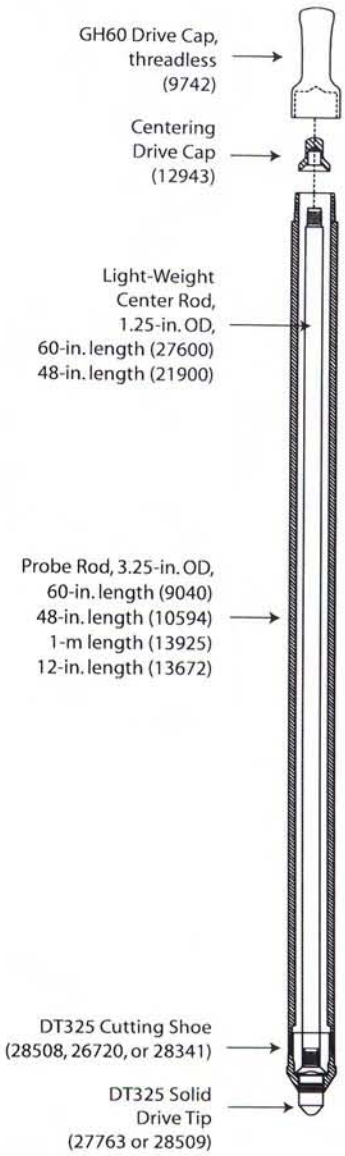

Figure 4.6
Completed Assembly

10. Raise the hammer assembly a few feet and retract the unit to provide access to the top of the outer casing assembly.

11. Remove the centering drive cap and 3.25-inch drive cap.

12. Add additional 1.25-inch light-weight center rods and 3.25-in. probe rods until the sampling interval is reached. At this point, the inner rods can be removed and an assembled sample sheath can be added (See Section 4.4)

4.4 Assembling the Sample Sheath

The sample sheath is used to support the weight of the 1.25-inch light-weight center rods and to protect the liner from damage while advancing the DT325 tool string. The process of assembling the sheath to collect soil samples is given below.

1. Place an O-ring onto the DT325 Liner Retainer. Note: No O-ring is needed for retainer 31039.
2. Slide the retainer ring onto the leading end of the liner. (Fig. 4.7).
3. Place the liner and retainer ring into either end of the sampler sheath (Fig. 4.8).
4. Thread the retainer ring onto the sample sheath. If the tools are clean, it should easily thread on easily by hand (Fig. 4.9).
5. On the opposite end of the sheath, thread on the DT325 Sheath Drive Head. The drive head will connect the sheath to the 1.25-inch light-weight center rods.

Figure 4.7. The retainer ring is placed on the end of the liner.

Figure 4.8. The liner and spacer ring are slid into the sample sheath.

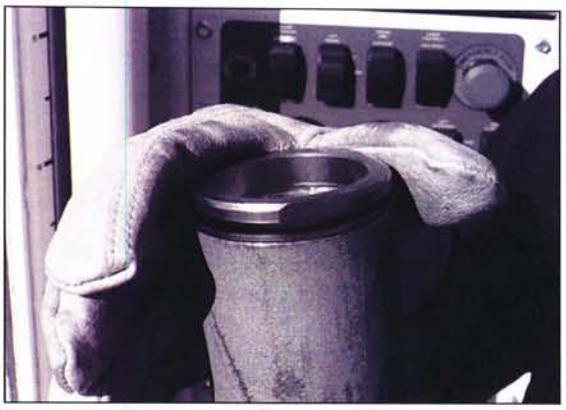

Figure 4.9. Tighten the retainer ring by hand.

The sample sheath is now ready for soil core collection (Section 4.5).

4.5 Soil Core Collection

This section describes collection of continuous soil core samples from within the sealed outer casing of the DT325 Dual Tube Sampling System. The procedure is written for a sampling series that begins at the ground surface. Refer to Figure 4.10 for an illustration of the assembled sampler.

1. When using a DT325 Standard (28508) or Optional (26720) Cutting Shoe, install an O-ring (9960) at the base of the theads as shown in Figure 4.3. If using an expendable cutting shoe, install an O-ring (9960) on the DT325 Expendable Cutting Shoe Holder (28339) and one o-rings (6834) on the DT325 Expendable Cutting Shoe (28341).
2. Thread the DT325 Cutting Shoe or DT325 Expendable Point Holder onto the leading end of a 3.25-inch OD Probe Rod (Fig. 4.11). Completely tighten the cutting shoe or cutting shoe holder using a pipe wrench.
3. Insert the sample sheath assembly into the 3.25-inch OD probe rod.

4. Place a Centering Drive Cap (12943) on top of the DT325 Drive Head (Fig. 4.12) and a GH60 Threadless Drive Cap (9742) onto the 3.25-inch probe rod (outer casing, Fig. 4.13).

5. Raise the hydraulic hammer to its highest position by fully extending the probe cylinder.

6. Position the DT325 Sampler directly under the hammer with the cutting shoe centered between the toes of the probe foot (Fig. 4.14). The sampler should now be parallel to the probe derrick. Step back from the unit and visually check sampler alignment. A magnetic level can be placed on the assembly to check level.

7. Apply static weight and hammer percussion to advance the sampler unit until the drive head reaches the ground surface.

   NOTE: Activate hammer percussion whenever collecting soil. Percussion helps shear the soil at the leading end of the sampler so that it moves into the sample tube for increased recovery.

8. Raise the hammer assembly a few feet and retract the unit to provide access to the top of the sampler.

9. Remove the drive cap and thread an additional 1.25-inch light-weight center rod onto the center string. Place the adjustable rod clamp on the top of the 3.25-inch rods to keep the center rods from falling when they are removed (Fig. 4.15).

10. Pull up the 1.25-inch light-weight center rod string along with the sample tube (Fig. 4.16).

    To sample consecutive soil cores, advance a clean sample sheath and liner down the previously opened hole to the top of the next sampling interval. Add 1.25-inch light weight center rods as the sample sheath is lowered into the opened hole. An additional 1.25-inch light-weight center rod and 3.25-inch probe rod should be added. Drive the tool string the length of the sampler to collect the next soil core. Proceed to Section 4.6 for instructions on recovering the soil core from the sample sheath.

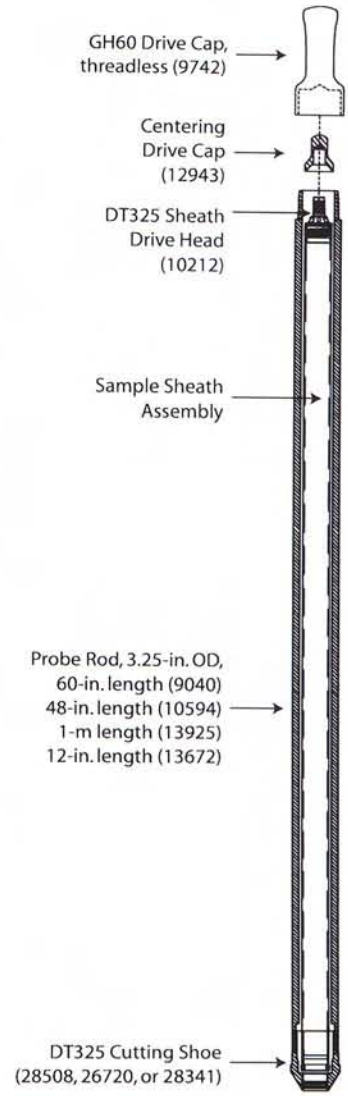

Figure 4.10
Assembled DT325 Sampler

Figure 4.11. The cutting shoe is threaded onto the 3.25-inch probe rod.

Figure 4.12. A centering drive cap is placed on the DT325 Drive Head.

Figure 4.13. Place the threadless drive cap on the 3.25-inch probe rod.

Figure 4.14. The probe rod should be centered between the toes of the probe foot.

Figure 4.15. The adjustable rod clamp can be used when retrieving the sample.

Figure 4.16. The 1.25-inch light-weight center rods are pulled along with the sample tube.

4.6 Removing Filled Liner from the Sample Sheath

Place the sample tube into the vise. The liner retainer wrench can be used to remove the DT325 Liner Retainer and liner from the sample sheath. If possible, the retainer can be removed by hand (Fig. 4.17). The wrench can be used to gently knock off the retainer if necessary (Fig. 4.17). With the retainer removed, the liner and core can be withdrawn from the sample tube. A Hydraulic Liner Extruder is also available for mounting on your machine to remove liners (Fig. 4.19).

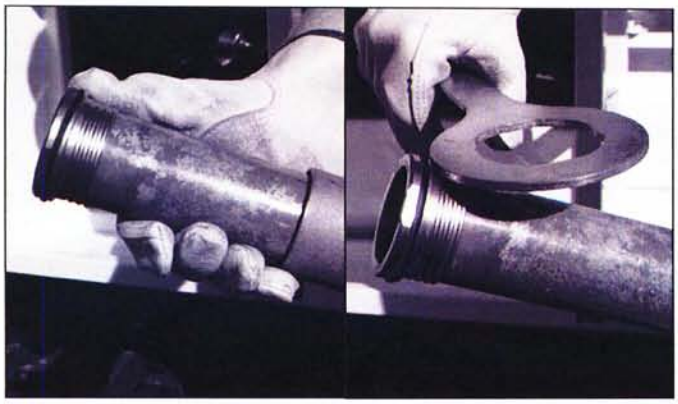

Figure 4.17. The retainer is removed from the sheath, either by hand or with the retainer wrench. Gently tap the retainer with the wrench to remove it from the liner.

Figure 4.18. The Hydraulic Liner Extruder helps remove the liner.

4.7 Removing a Section of Liner with a DT325 Liner Cutter

The liner and core can be placed on the Universal Liner Holder. Use the DT325 Liner Cutter to safely expose the sample. Begin the cut at the opposite end of the core catcher (Fig. 4.19). It is a little thinner plastic, which makes it easier to begin the cut. Using both hands, smoothly pull the cutter through the liner. The slit liner can be removed and the core is exposed (Fig. 4.20).

Figure 4.19. The DT325 Liner Cutter is used to safely make a longitudinal cut on the sample.

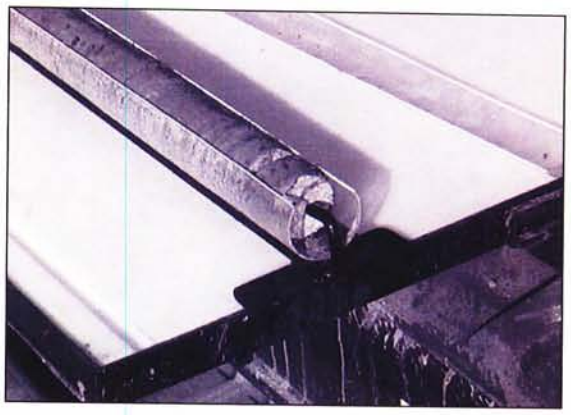

Figure 4.20. The core is exposed by the DT325 Liner Cutter.

4.8 Dual Tube Soil Sampling Tips

Saturated sands are the most difficult formations to sample with the DT325 system. Saturated conditions place positive pressure on the soil outside of the outer casing. When sampling in noncohesive formations (e.g. sands) below the water table, it may be necessary to add water to the outer casing to prevent formation heave. Adding water to the probe rods puts a positive head on the system and may keep formation material from flowing into the rods as the liner and soil sample are retracted. If a small amount of formation material is still drawn into the outer casing as the soil core is retrieved, the material may be displaced by slightly raising the outer casing while lowering the next new liner to depth. Water must be maintained within the outer casing during this process to overcome the hydraulic head imparted by the formation fluid. When retrieving, pull back the sample slowly.

DT325 core catcher liners will help considerably with sample recovery in non-cohesive soils and other materials that do not fill the liner diameter. Core catcher liners are not recommended for cohesive or expansive soils as the core catchers may actually inhibit soil movement into the liner. Also, using a shorter sample interval may improve sample recovery by minimizing wall friction as the material is sampled.

Certain soils have a tendency to exhibit plastic flow or extrusion characteristics. Allowing additional space for these materials will increase the speed of sampling because less time is spent cleaning overfilled sample sheaths. This will also yield a more representative sample. Using a sheath that is a foot or two longer than the sampling interval or using a shorter sample interval (under driving) can create a buffer zone. The DT325 Liner Spacer and Spacer Head were designed for these situations.

Some clay materials will extrude during sampling. Under these conditions, using a shorter sample interval (24-inch liners) may improve sample recovery by minimizing the wall friction as the material is sampled.

It is recommended that O-rings be used no the cutting shoe and liner retainer when sampling in clays. If they are not used, clay may build up between the sample sheath and the outer casing. It is not necessary to use o-rings in saturated sands and anytime water is present.

It may be helpful to mark the first 1.25-inch light-weight center rod attached to the sheath as an indicator that the sheath is next in line.

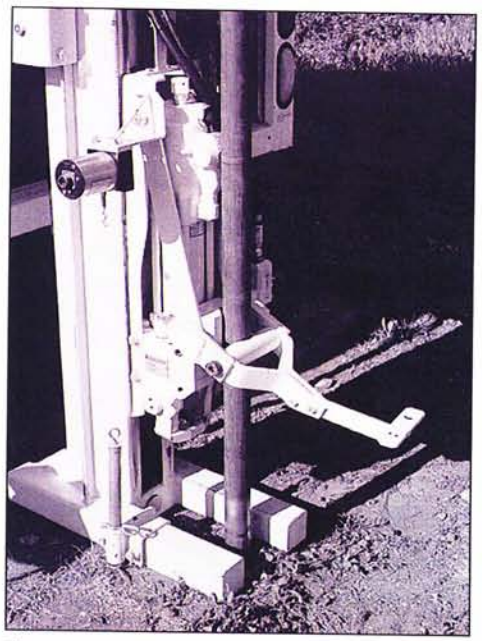

Figure 4.21. Outer casing may be retrieved with a pull cap or rod grip pull system if the probe hole is sealed with granular bentonite.

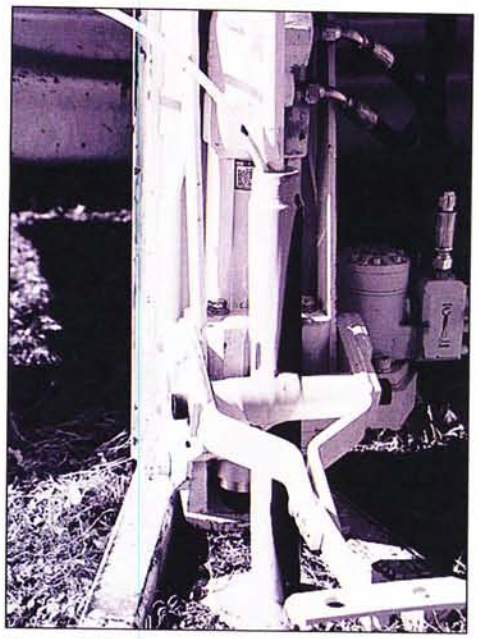

Figure 4.22. A grout machine and flexible tubing allow bottom-up grouting as the outer casing is retrieved.

4.9 Outer Casing Retrieval

The outer casing of the DT325 Dual Tube System may be retrieved in one of three ways:

1. Casing pulled then probe hole sealed from ground surface with granular bentonite.

   The outer casing may be pulled from the ground with the probe machine and a Pull Cap (13257) or a Rod Grip Pull System (for GH40 Hammers [12235] or for GH60 Hammers [9757]) if the probe hole is to be sealed with granular bentonite from the ground surface (Fig. 4.21). This method is used for shallow probe holes in stable formations only. Such conditions allow the entire probe hole to be sealed with granular bentonite.

2. Casing pulled with probe hole sealed from bottom-up during retrieval.

   Bottom-up grouting should be performed during casing retrieval in unstable formations where side slough is probable. Such conditions create void spaces in the probe hole if granular bentonite is installed from the ground surface.

   A GS500 or GS1000 Grout Machine is used to deliver a sealing material (high-solids bentonite slurry or neat cement grout) to the bottom of the outer casing through flexible tubing. The grout mix is pumped through the tubing to seal the void remaining as the outer casing is retrieved (Fig. 4.22). This is an advantage of the DT325 Dual Tube Sampling System as other soil samplers require a second set of tools to deliver grout to the bottom of the probe hole. Contact Geoprobe Systems® for more information on bottom-up grouting with the GS500 and GS1000 Grout Machines.

Figure 4.23. Geoprobe® prepacked screens may be installed through the outer casing when an expendable cutting shoe is used.

3. Casing pulled with Geoprobe Prepacked Screen Well installed during retrieval.

   The final option is to install a 2.5-inch OD Geoprobe® Prepacked Screen Monitoring Well in the probe hole during retrieval of the outer casing. A DT325 Expendable Cutting Shoe Holder (28339) and a DT325 Expendable Cutting Shoe (28341) allow the operator to collect continuous soil cores as the outer casing is driven to depth.

When sampling is complete, the outer rods are raised and the expendable cutting shoe is removed from the leading rod. This leaves an open casing through which a set of prepacked screens is lowered on the leading end of a PVC riser string. The well is finished, complete with grout barrier, bentonite well seal, and a high-solids bentonite slurry/neat cement grout, during retrieval of the outer casing.

Refer to Geoprobe® 0.5-in. x 1.4-in. OD and 0.75-in. x 1.4-in. OD Prepacked Screen Monitoring Wells Standard Operating Procedure (Geoprobe® Technical Bulletin No. 962000) for specific information on well installation.

5.0 References

Geoprobe Systems®, 2003. *Tools Catalog, V. 6.*

Geoprobe Systems®, 2005. *Standard Operating Procedure. Geoprobe@ Pneumatic Slug Test Kit. Technical Bulletin No. 19344.*

Geoprobe Systems®, 2006. *Direct Push Installation of Devices for Active Soil Gas Sampling and Monitoring. Technical Bulletin No. MK3098.*

Geoprobe Systems®, 2006. *Standard Operating Procedure. 1.0-in. x 2.5-in. OD and 1.5-in. x 2.5-in. OD Prepacked Screen Monitoring Wells. Geoprobe® Technical Bulletin No. 962000.*

Equipment and tool specifications, including weights, dimensions, materials, and operating specifications included in this brochure are subject to change without notice. Where specifications are critical to your application, please consult Geoprobe Systems®.

Geoprobe Systems®

A DIVISION OF KEJR, INC.

Corporate Headquarters
601 N. Broadway • Salina, Kansas 67401
1-800-GEOPROBE (1-800-436-7762) • Fax (785) 825-2097
www.geoprobe.com

ATTACHMENT C

GEOPROBE SYSTEMS®

TECHNICAL BULLETIN NO. MK3139

~~ATTACHMENT C~~

~~GEOPROBE SYSTEMS®~~

~~TECHNICAL BULLETIN NO. MK3138~~

GEOPROBE® MACRO-CORE® MC5
1.25-INCH LIGHT-WEIGHT CENTER ROD SOIL SAMPLING SYSTEM

STANDARD OPERATING PROCEDURE

Technical Bulletin No. MK3139

PREPARED: November, 2006

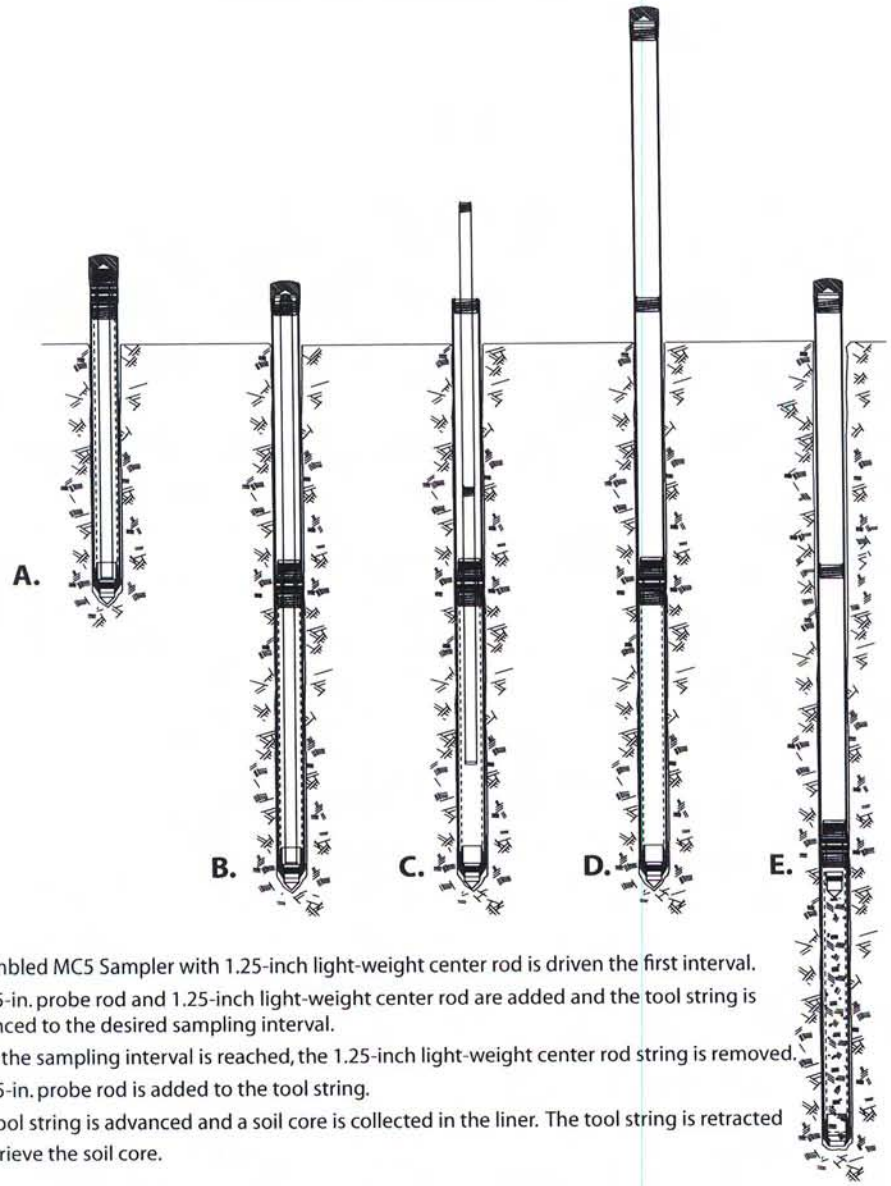

A. Assembled MC5 Sampler with 1.25-inch light-weight center rod is driven the first interval.
B. A 2.25-in. probe rod and 1.25-inch light-weight center rod are added and the tool string is advanced to the desired sampling interval.
C. Once the sampling interval is reached, the 1.25-inch light-weight center rod string is removed.
D. A 2.25-in. probe rod is added to the tool string.
E. The tool string is advanced and a soil core is collected in the liner. The tool string is retracted to retrieve the soil core.

OPERATION OF THE MACRO-CORE® MC5 SOIL SAMPLING SYSTEM

Geoprobe® and Geoprobe Systems®, Macro-Core®, and Direct Image® are Registered Trademarks of Kejr, Inc., Salina, Kansas

Macro-Core® and Large Bore Soil Samplers manufactured under US Patent 5,606,139.

Macro-Core® Closed-Piston Drive Point manufactured under US Patent 5,542,481

©2006 Kejr, Inc.
ALL RIGHTS RESERVED
No part of this publication may be reproduced or transmitted in any form or by any means, electronic or mechanical, including photocopy, recording, or any information storage and retrieval system, without written permission from Kejr, Inc.

1.0 OBJECTIVE

The objective of this procedure is to collect a representative soil sample at depth and recover it for visual inspection and/or chemical analysis.

2.0 BACKGROUND

2.1 Definitions

Geoprobe®*: A brand name of high quality, hydraulically-powered machines that utilize both static force and percussion to advance sampling and logging tools into the subsurface. The Geoprobe® brand name refers to both machines and tools manufactured by Geoprobe Systems®, Salina, Kansas. Geoprobe® tools are used to perform soil core and soil gas sampling, groundwater sampling and testing, soil conductivity and contaminant logging, grouting, and materials injection.

**Geoprobe® and Geoprobe Systems® are registered trademarks of Kejr, Inc., Salina, Kansas.*

Macro-Core® MC5 Soil Sampler:** A solid barrel, direct push device for collecting continuous core samples of unconsolidated materials at depth. Although other lengths are available, the standard Macro-Core® MC5 Sample Tubes come in lengths of 48 inches and 60 inches with an outside diameter of 2.25 inches. Samples are collected inside a removable liner. The Macro-Core® MC5 Sampler may be used in an open-tube or closed-point configuration.

***Macro-Core® is a registered trademarks of Kejr, Inc., Salina, Kansas.*

Liner: A removable/replaceable, thin-walled tube inserted inside the Macro-Core® MC5 sample tube for the purpose of containing and storing soil samples. While other lengths are available, the most common Macro-Core® MC5 Liners are 48 inches and 60 inches in length. The liner length should correspond to the length of the sample tube used. Liner materials include stainless steel, Teflon®, and PVC.

1.25-inch Light-Weight Center Rods: Used as the inner Rod String for Macro-Core® MC5 sampling. 1.25-inch Light-Weight Center rods come in lengths of 48 inches and 60 inches. They provide a weight reduction of up to 64% over standard 1.25-inch probe rods.

2.2 Discussion

In this procedure, an assembled Macro-Core® MC5 Soil Sampler is driven one sampling interval into the subsurface and retrieved using a Geoprobe® direct push machine. The collected soil core is removed from the sampler along with the used liner. After decon, the Macro-Core® sampler is reassembled using a new liner. The clean sampler is then advanced back down the same hole to collect the next soil core. The Macro-Core® Sampler may be used as an open-tube or closed-point sampler.

The Macro-Core® MC5 Soil Sampler is commonly used as an open-tube sampler (Fig. 2.1A). In this configuration, coring starts at the ground surface with a sampler that is open at the leading end. The sampler is driven into the subsurface and then pulled from the ground to retrieve the first soil core. In stable soils, an open-tube sampler is advanced back down the same hold to collect the next core.

In unstable soils which tend to collapse into the core hold, the Macro-Core® MC5 Sampler can be equipped with a 1.25-inch Center Rod Closed-Point assembly (Fig 2.1B). The point fits firmly into the cutting shoe and is held in place by the 1.25-inch light-weight center rods. The Macro-Core® MC5 Center Rod System prevents collapsed soil from entering the sampler as it is advanced to the bottom of an existing hole, thus ensuring collection of a representative sample. Once the 1.25-inch light weight center rod system is removed, the point

will be pushed up the liner during the next sampling interval. The point assembly is later retrieved from the sampler with the liner and soil core.

The Macro-Core® MC5 Soil Sampler is a true discrete sampler. It can be driven through undisturbed soil to a desired depth using the 1.25-inch Light Weight Center Rod System. Once the 1.25-inch light-weight center rods are removed, a representative sample is recovered from the desired depth.

Loose soils may fall from the bottom of the sampler as it is retrieved from depth. The MC Core Catcher (Fig. 3.1) alleviates this problem. Excellent results are obtained when the core catcher is used with saturated sands and other non-cohesive soils. A core catcher should not be used with tight soils as it may actually inhibit sample recovery. In that case, a MC Spacer Ring or extended shank cutting shoe can be used. Constructed of PVC, the core catcher is suitable for use with all Geoprobe® liners.

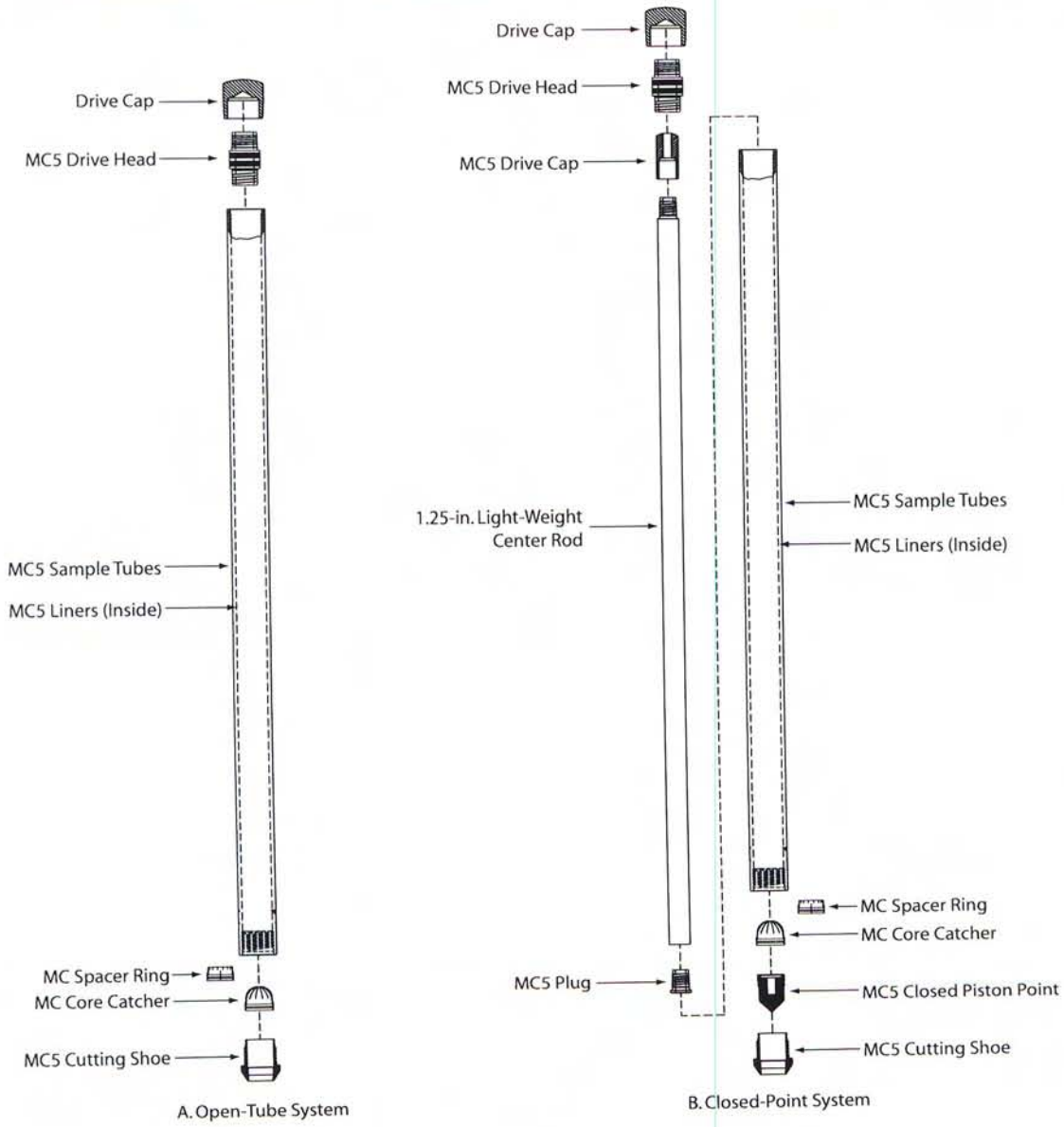

Figure 2.1
Macro-Core® MC5 Soil Sampler Configurations

3.0 TOOLS AND EQUIPMENT

The following tools and equipment can be used to recover representative soil cores with the MC5 Soil Sampling System. Sample tubes, 1.25-inch light-weight center rods, probe rods, and liners all need to be of equal length in order to obtain a sample. Refer to Figure 3.1 for identification of the specified parts. Additional tooling options are available in Appendix A.

MC5 Sampler Parts	Part Number
MC5 Drive Head, 2.25 in. bored	28646
MC5 Drive Head, 2.125 in. bored	23640
MC5 Sample Tubes, 60 in.	22992
MC5 Sample Tubes, 48 in.	22923
MC5 Sample Tubes, 1 m.	24239
MC5 Sample Tubes, 36 in.	24238
MC5 Sample Tubes, 24 in.	24237
MC5 Cutting Shoe, standard, 2.25 in. OD	22922
MC5 Cutting Shoe, undersized, 1.35 in. ID	23957
MC5 Cutting Shoe, standard, 2.25 in. OD (extended shank)	23978
MC5 Cutting Shoe, undersized, 1.35 in. ID (extended shank)	28237
MC5 Cutting Shoe, undersized, 1.25 in. ID (extended shank)	26078
MC5 Cutting Shoe, Heavy Duty, 1.35 in. ID,	29552
MC5 Closed Piston Point, standard	28113
MC5 Closed Piston Point, undersized	26865

Center Rods (1.25 in.) and Center Rod Accessories	Part Number
1.25-in. Center Rod, 60 in. Lightweight	27600
1.25-in. Center Rod, 48 in. Lightweight	21900
Probe Rod, 1.25 in. x 1 m.	AT1239
Probe Rod, 1.25 in. x 36 in.	AT1236
Probe Rod, 1.25 in. x 24 in.	AT1224
MC5 Drive Cap, 1.25 in. Center Rod, Threadless	23639
MC5 Plug Threaded, 1.25 in.	23641
1.25 in. Pull Cap	AT1204

Probe Rods and Probe Rod Accessories	Part Numbers for Specific Probe Rod OD	
	2.25-in. OD	2.125-in. OD
Probe Rod, 60 in.	25301	AT2160
Probe Rod, 48 in.	25300	AT2148
Probe Rod, 1 m.	25352	AT2139
Probe Rod, 2.125 in. x 36 in.		AT2136
Probe Rod, 2.125 in. x 24 in.		13072
Drive Cap, GH60 Series, Threadless	31530	8397
Drive Cap, GH40 Series, Threadless	31405	
Drive Cap, GH40 Series, Threaded		AT2101
Pull Cap	25298	AT2104

MC5 Liners, Accessories, and Miscellaneous Tools	Part Number
MC Liners, 60 in. (66 liners)	10074
MC Liners, 48 in. (66 liners)	AT927K
MC Liners, 1m. (66 liners)	AT928K
MC Liners, 36 in. (66 liners)	AT921K
MC Liners, 24 in. (66 liners)	AT926K
MC Core Catcher	AT8531
MC Spacer Ring	AT8532
MC Spacer Ring (Bulk Box of 500)	AT8533K
Vinyl End Caps (Package of 66)	AT726K
Liner Cutter	AT8010
Universal Liner Holder	22734
Rod Wiper Weldment	23633
Rod Wiper Doughnuts, 2.125-in and 2.25-in.	26876
Two Pipe Wrenches	

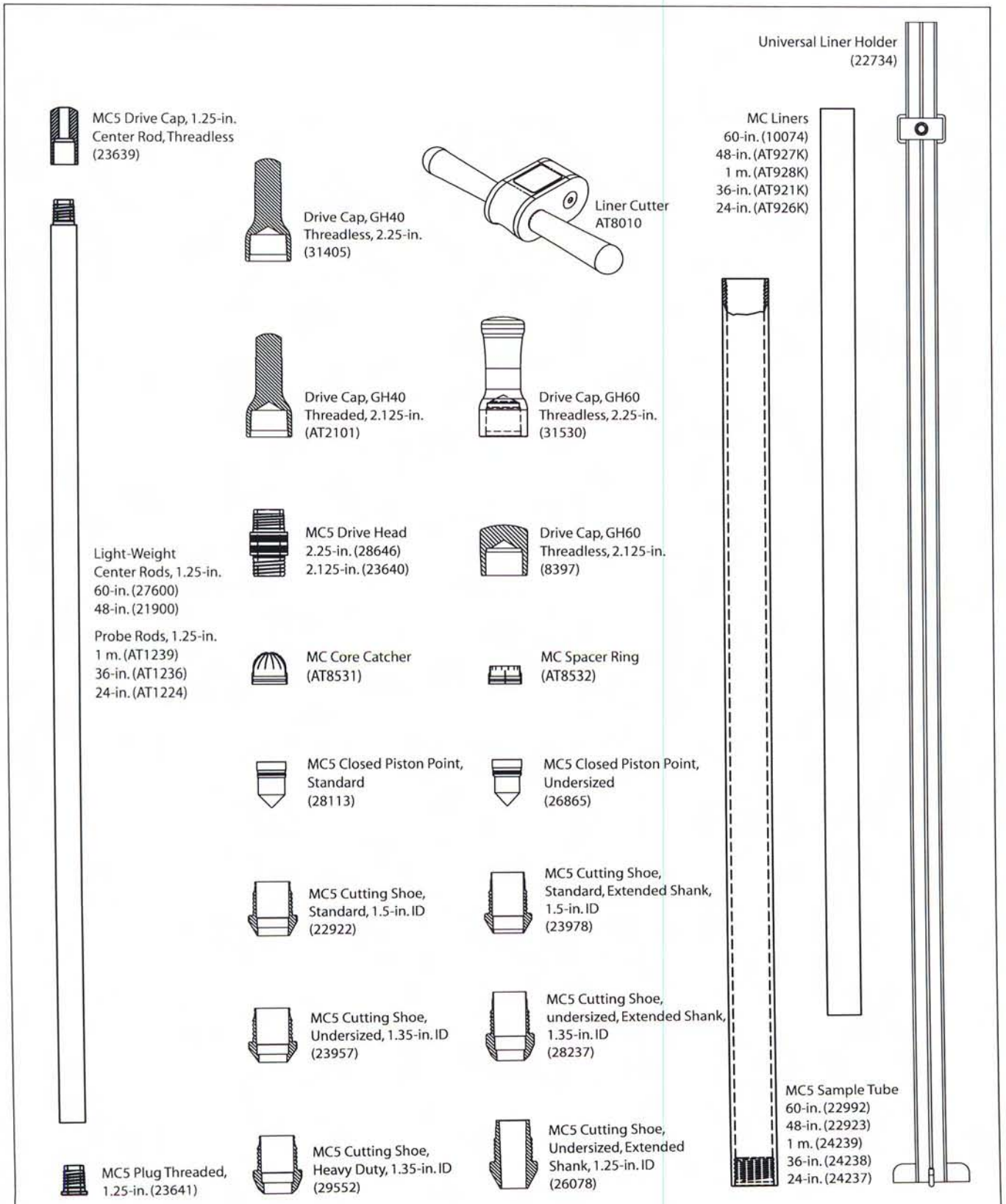

Figure 3.1
Macro-Core® MC5 Soil Sampler Parts

3.1 Tool Options

Five major components of the MC5 Soil Sampling System are sample tubes, probe rods, 1.25-inch light-weight center rods, sample liners, and cutting shoes. These items are manufactured in a variety of sizes to fit the specific needs of the operator. This section identifies the specific tool options available for use with the MC5 Soil Sampling System.

Sample Tubes

MC5 Sample tubes come in lengths of 60 inches (1524 mm), 48 inches (1219 mm), 1 meter, 36 inches (914 mm), and 24 inches (610 mm).

Probe Rods

Standard Geoprobe® 2.125-inch and 2.25-inch OD probe rods are required to operate the MC5 Soil Sampling System. The specific length of rods may be selected by the operator. The most common rod lengths used in MC5 Soil Sampling are the 60-inch and 48-inch rods.

1.25-inch Light-Weight Center Rods

1.25-inch Light-Weight Center Rods (1.25-inch / 32-mm OD) are recommended for the inner rod string of the MC5 system when utilizing an outer casing of 48- or 60-inch long rods. Choose the light-weight rod length that matches the length of rods used for the outer casing (48-inch light-weight rods with 48-inch outer casing, etc.). Currently, standard Geoprobe® 1.25-inch probe rods must be used with 24-inch, 36-inch, and 1-meter MC5 Sample Tubes.

A weight reduction of up to 64% is provided by the 1.25-inch Light-Weight Center Rods over standard 1.25-inch probe rods. As a result, considerably less energy is expended when retrieving the 1.25-inch Light-Weight Center Rods from within the outer casing during operation of the MC5 System.

Sample Liners

Sample liners are made of heavy-duty clear plastic for convenient inspection of the soil sample. Nominal lengths of 24 inches, 36 inches, 1 meter, 48 inches, and 60 inches are available. Choose the liner length corresponding to the length of the sample tube used (e.g. 60-inch liners with 60-inch sample tubes).

Cutting Shoes

Six cutting shoes are available for use with the MC5 Soil Sampling System (Fig. 3.2). The extended shank cutting shoes (23978, 28237, and 26078) fit inside the sample liner and help soil pass freely into the liner. The other three cutting shoes (22922, 23957, 29552) require an MC Core Catcher (AT8531) or MC Spacer Ring (AT8532) in order to properly connect to the sample liners.

The most prominently used cutting shoes are the two "standard" cutting shoes (22922 and 23978). These cutting shoes collect a 1.5-inch (38-mm) diameter soil core.

Undersized cuttings shoes (23957, 28237, and 29552) collect a smaller 1.35-inch (34-mm) soil core and are used in formations with plastic clays or other soil types that lead to overfilling of the sampler liner. Of these, the 29552 and 28237 cutting shoes are also thicker at the leading end for increased durability in harsh conditions where cobbles or large gravel are present.

Soil formations with highly plastic clays may call for an even smaller soil core. In these conditions, a 26078 cutting shoe with its 1.25-inch (32-mm) soil core is most effective.

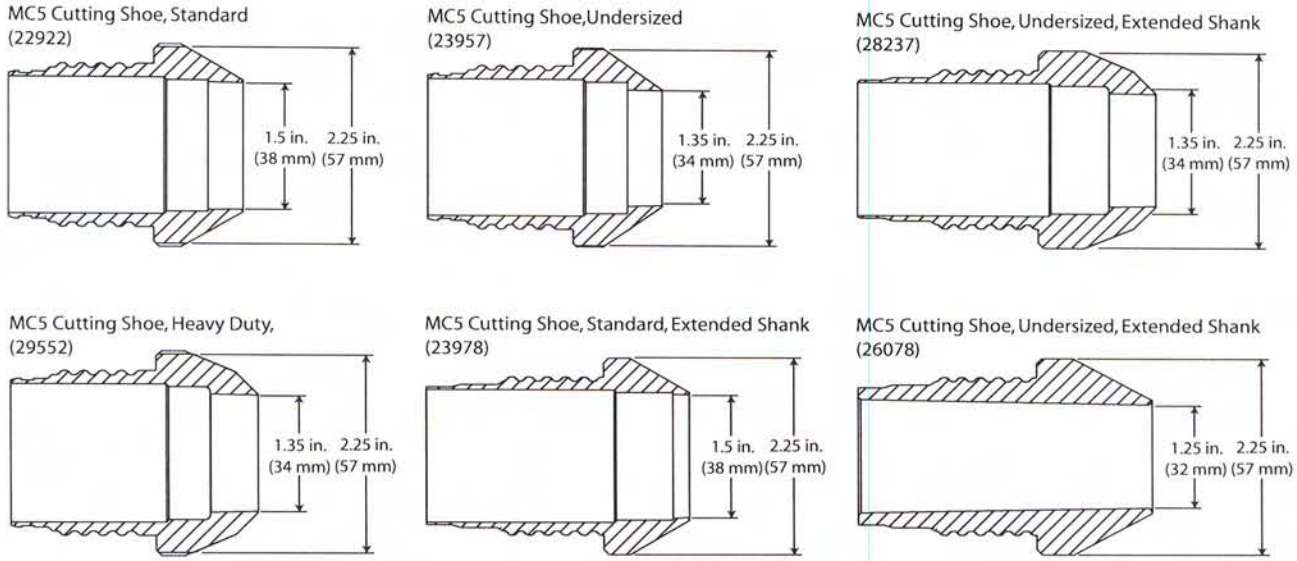

Figure 3.2
Cutting Shoe Options for Macro-Core® MC5 Soil Sampler

4.0 OPERATION

All parts shown in illustrations are those most commonly used configuration for the MC5 Sampling System. Refer to Section 3.0 for part numbers and additional tooling options.

4.1 Decontamination

Before and after each use, thoroughly clean all parts of the soil sampling system according to project requirements. Parts should be inspected for wear or damage at this time. During sampling, a clean new liner is used for each soil core.

Cleaning inside the probe rods and MC5 sample tubes is accomplished with the nylon brushes and extension rods listed in Appendix A. Thread a nylon brush and handle onto an extension rod of suitable length. Using clean water and phosphate-free soap, cycle the brush inside the probe rod or sample tube to remove contaminants. Rinse with clean water and allow to air dry.

4.2 Field Blank

It is suggested that a field blank be taken on a representative sample liner prior to starting a project and at regular intervals during extended projects. Liners can become contaminated in storage. A field blank will prove that the liners do not carry contaminates which can be transferred to soil samples. The following information is offered as an example method which may be used to take a field blank. Make the appropriate modifications for the specific analytes of interest to the investigation.

Example Procedure Required Equipment

MC Liner ..... (1)
MC Vinyl End Caps ..... (2)
Distilled Water ..... (100 ml)
VOA Vial (or other appropriate sample container) ..... (1)

1. Place a vinyl end cap on one end of the liner.
2. Pour 100 milliliters of distilled water (or other suitable extracting fluid) into the liner.
3. Place a vinyl end cap on the open end of the liner.
4. From the vertical position, repeatedly invert the liner so that the distilled water contacts the entire inner surface. Repeat this step for one minute.
5. Remove one end cap from the liner, empty contents into an appropriate sample container, and cap the container.
6. Perform analysis on the extract water for the analytes of interest to the investigation.

4.3 Open-Tube Sampler Assembly

1a. Using the MC Core Catcher

Place the open end of an MC Core Catcher over the threaded end of an MC5 Cutting Shoe (22992, 23957, 29552) as shown in Figure 4.2. Apply pressure to the core catcher until it snaps into the machined groove on the cutting shoe. The core catcher should be used in loose soils, especially saturated sands (non-cohesive soils). Use of the core catcher is not necessary in tough, cohesive soils or tight clays, and may interfere with sampling especially in soft clays. The "fingers" of the core catcher flex outward to let soil move into the liner while sampling.

Figure 4.1. The spacer ring fits securely onto the MC5 Cutting Shoe.

1b. Using the MC Spacer Ring

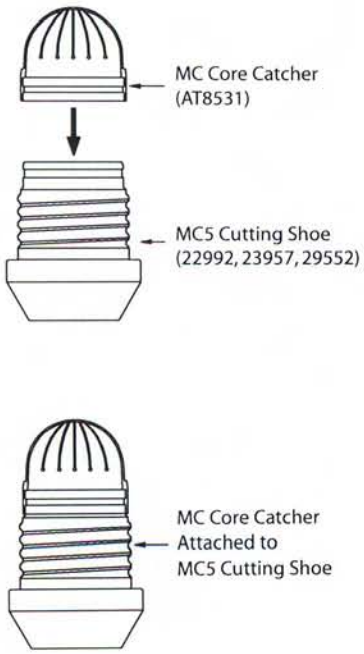

Figure 4.2
Core Catcher Attachment

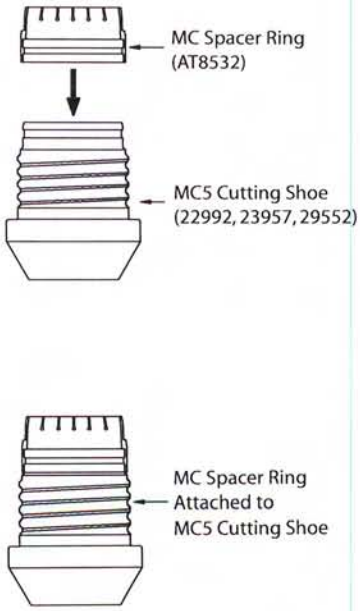

Figure 4.3
Spacer Ring Attachment

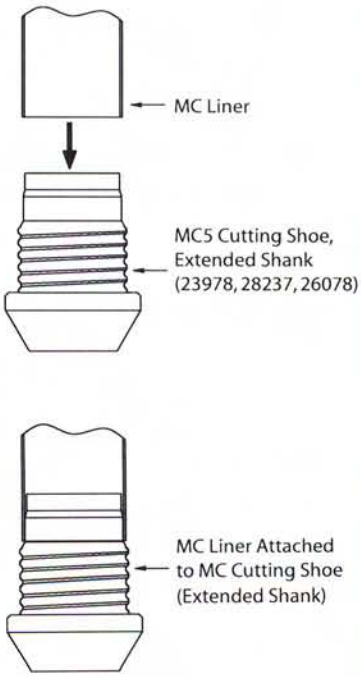

Figure 4.4
Liner Attachment on Extended Shank

Push the base of an MC Spacer Ring onto the threaded end of an MC5 Cutting Shoe (22992, 23957, 29552) until it snaps into the machined groove on the cutting shoe (Fig. 4.1 and Fig. 4.3). Spacer rings should be used when sampling cohesive soils. It allows soil to pass freely over the junction between the liner and cutting shoe.

1c. Using the Extended Shank Cutting Shoe

The cutting shoes with extended shanks (23978, 28237, 26078) do not use core catchers or spacer rings. MC5 Liners should securely slide onto the end of these cutting shoes (Fig. 4.4). The extended shank cutting shoes should only be used when sampling cohesive soils. When sampling loose soils, especially saturated sands (non-cohesive soils), a cutting shoe with an MC Core Catcher is recommended.

2. Place either end of the liner onto the spacer ring or core catcher (Fig. 4.6). If you are using a cutting shoe with an extended shank, do not use a spacer ring or core catcher (Fig. 4.7). The liner should fit securely onto the spacer ring, core catcher, or cutting shoe.

3. Slide whole assembly into either end of the sample tube (Fig. 4.8). Thread the cutting shoe onto the sample tube (Fig. 4.9). If the thread is clean, it should easily thread on by hand. In some cases, a wrench may be necessary for tightening. There shouldn't be a gap between the cutting shoe and sample tube.

4. Thread an MC5 Drive Head into the top of the sample tube (Fig. 4.10). Securely tighten the drive head by hand. Ensure that the end of the sample tube contacts the machined shoulder of the drive head.

Sampler Assembly is Complete

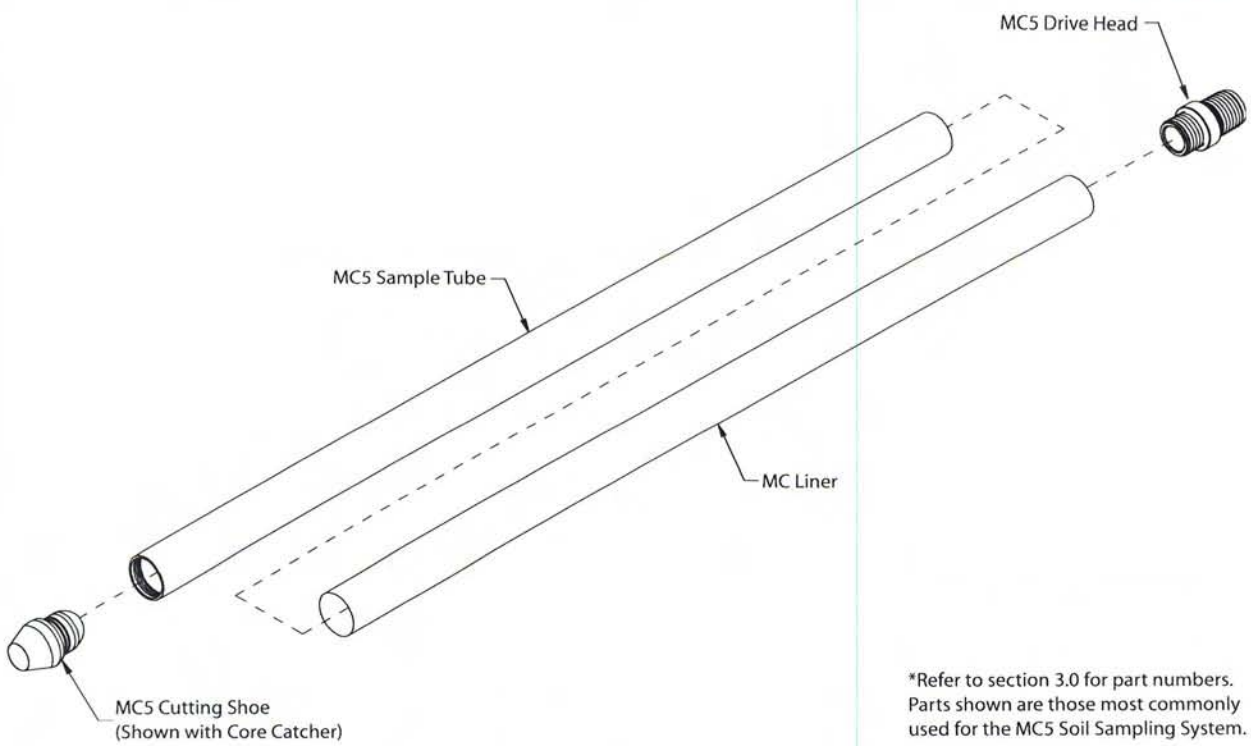

*Refer to section 3.0 for part numbers. Parts shown are those most commonly used for the MC5 Soil Sampling System.

Figure 4.5
MC5 Open-Tube Sampler Assembly

Figure 4.6. Place either end of the liner onto the spacer ring or core catcher. The liner should fit securely.

Figure 4.7. Place either end of the liner onto the extended shank cutting shoe. (This is used in place of a spacer ring or core catcher)

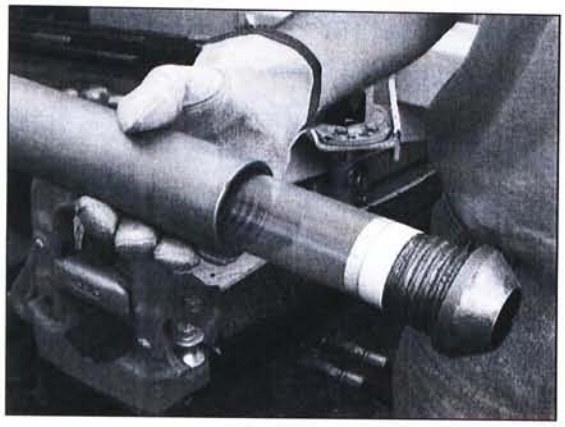

Figure 4.8. Slide whole assembly into either end of the sample tube.

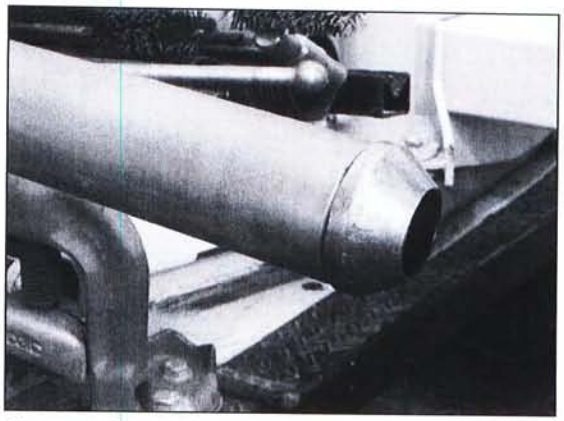

Figure 4.9. Thread the cutting shoe onto the sample tube.

Figure 4.10. Thread the MC5 Drive Head onto the opposite end of the sample tube. Tighten by hand.

4.4 MC5 Closed-Point Sampler Assembly

The Macro-Core® 1.25-inch Light-Weight Center Rod Sampling System seals the leading end of the sampler with a point (Fig. 4.11) assembly that is held in place with a 1.25-inch light weight center rod. Once advanced to the top of the sampling interval, the 1.25-inch Light-Weight Center Rods are removed from the probe rod string.

1. Install an O-ring in the machined groove on the piston rod point (Fig. 4.12).

2. Push the MC5 Closed Piston Point (28113 or 26865) completely into the cutting shoe as shown in Figure 4.12. Note that the standard point (28113) is used with 1.5-inch (38-mm) ID cutting shoes and the undersized point (26865) is for cutting shoes with a 1.35-inch (34-mm) ID.

Figure 4.11. The MC5 Closed Piston Point slides into the cutting shoe.

3a. Using the MC Core Catcher

Place the open end of an MC Core Catcher over the threaded end of an MC5 Cutting Shoe (22992, 23957, 29552) as shown in Figure 4.13. Apply pressure to the core catcher until it snaps into the machined groove on the cutting shoe. The core catcher should be used in loose soils, especially saturated sands (non-cohesive soils). Use of the core catcher is not necessary in tough, cohesive soils or tight clays, and may interfere with sampling especially in soft clays. The "fingers" of the core catcher flex outward to let soil move into the liner while sampling.

3b. Using the MC Spacer Ring

Push the base of an MC Spacer Ring onto the threaded end of an MC5 Cutting Shoe (22992, 23957, 29552) until it snaps into the machined groove on the cutting shoe (Fig. 4.14). Spacer rings should be used when sampling cohesive soils. It allows soil to pass freely over the junction between the liner and cutting shoe.

3c. Using the Extended Shank Cutting Shoe

The cutting shoes with extended shanks (23978, 28237) do not use core catchers or spacer rings. MC5 Liners should securely slide onto the end of these cutting shoes (Fig. 4.15). The extended shank cutting shoes shoud only be used when sampling cohesive soils. When sampling loose soils, especially saturated sands (non-cohesive soils), a cutting shoe with an MC Core Catcher is recommended.

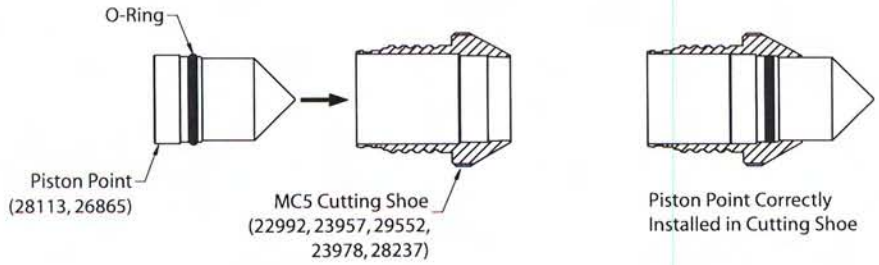

Figure 4.12
Installation of MC5 Closed Piston Point Assembly in MC5 Cutting Shoe

Figure 4.13
Core Catcher Attachment With Point Assembly

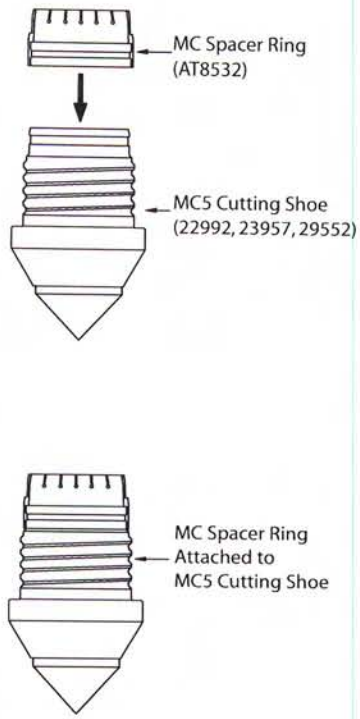

Figure 4.14
Spacer Ring Attachment With Point Assembly

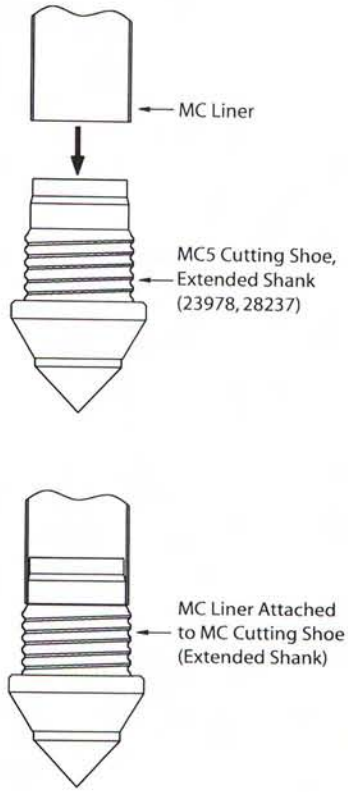

Figure 4.15
Liner Attachment on Extended Shank With Point Assembly

Refer to Figure 4.16 for MC5 Closed-Point Sampler Assembly

4. Place either end of the liner onto the spacer ring or core catcher (Fig. 4.18). If you are using a cutting shoe with an extended shank, do not use a spacer ring or core catcher (Fig. 4.19). The liner should fit securely onto the spacer ring, core catcher, or cutting shoe.

5. Slide whole assembly into either end of the sample tube (Fig. 4.20). Thread the cutting shoe onto the sample tube (Fig. 4.21). If the thread is clean, it should easily thread on by hand. In some cases, a wrench may be necessary for tightening. There shouldn't be a gap between the cutting shoe and sample tube.

6. Thread an MC5 Drive Head into the top of the sample tube. Securely tighten the drive head by hand. Ensure that the end of the sample tube contacts the machined shoulder of the drive head (Refer to Figure 4.10).

continued on page 14

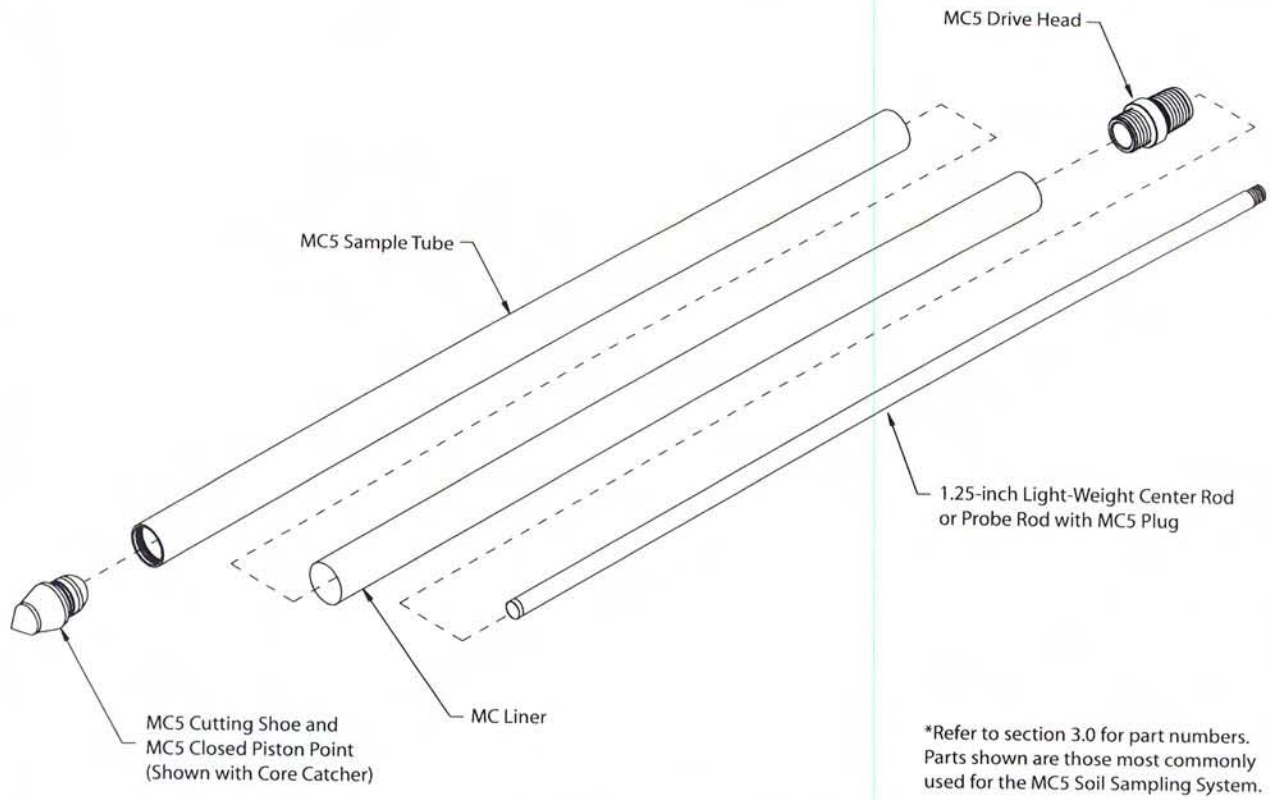

Figure 4.16
MC5 Closed-Point Sampler Assembly

7. Thread an MC5 Plug (23641) onto 1.25-inch light-weight center rod (Fig. 4.22). Note that light-weight center rods are only available in 48-inch and 60-inch lengths. Utilize 1.25-inch probe rods if other lengths are required.

8. Insert the light-weight center rod and MC5 Plug into sample tube assembly (Fig. 4.23), sending the plug end in first. Allow it to come in contact with the top of the Piston Point (Fig. 4.17).

Sampler Assembly is Complete

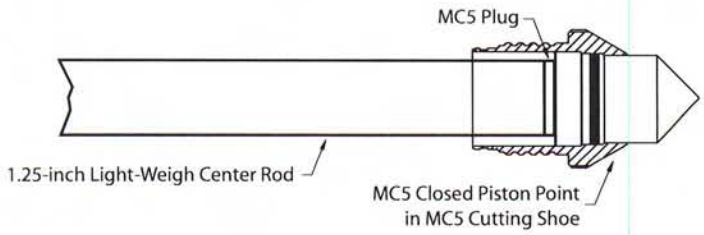

Figure 4.17
MC5 Closed-Point Center Rod Assembly

Figure 4.18. Place either end of the liner onto the spacer ring or core catcher. The liner should fit securely.

Figure 4.19. Place either end of the liner onto the extended shank cutting shoe. (This is used in place of a spacer ring or core catcher)

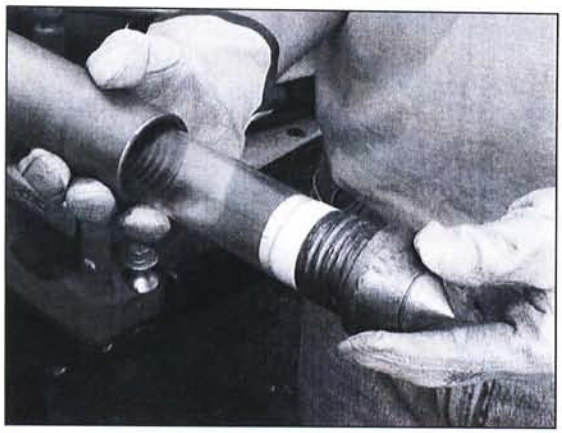

Figure 4.20. Slide whole assembly into either end of the sample tube.

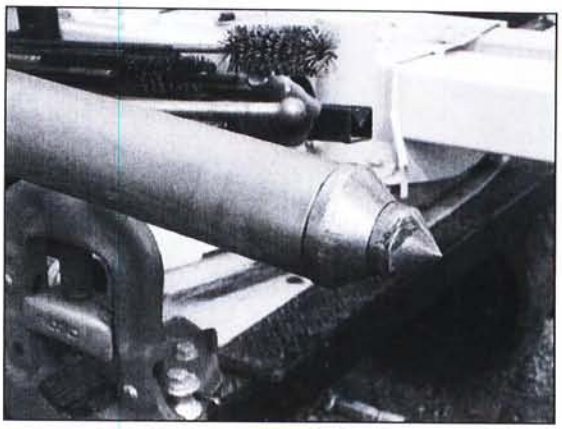

Figure 4.21. Thread the cutting shoe and point onto the sample tube.

Figure 4.22. The MC5 Plug is threaded onto the end of the 1.25-inch light-weight center rod.

Figure 4.23. The MC5 Plug and a 1.25-inch light-weight center rod are inserted into the sample tube.

4.7 Open-Tube Sampling

The MC5 Open-Tube Sampler is used to gather continuous soil cores beginning from ground surface. A representative soil sample is obtained by driving the assembled sampler one sampling interval into the subsurface through undisturbed soil. Upon retrieving the sampler, the liner and soil core are removed. The sampler is then properly decontaminated, reassembled with a new liner, and inserted back down the same hole to collect the next soil core.

Instructions for operating the MC5 Open-Tube Sampler are given in this section.

1. Place a drive cap onto the drive head (Fig. 4.24) of an assembled Open-Tube Sampler (Refer to Section 4.3 for sampler assembly).

2. Raise the probe unit hammer assembly to its highest position by fully extending the probe cylinder.

3. Position the MC5 Sampler directly under the hammer with the cutting shoe centered between the toes of the probe foot. The sampler should now be parallel to the probe derrick. Step back from the unit and visually check sampler alignment (Fig. 4.25).

4. Apply static weight and hammer percussion to advance the sampler until the drive head reaches the ground surface. (Fig. 4.27A)

   NOTE: Activate hammer percussion whenever collecting soil. Percussion helps shear the soil at the leading end of the sampler so that it moves into the sample tube for increased recovery.

5. Raise the hammer assembly a few inches to provide access to the top of the sampler.

6. Remove the drive cap and thread a pull cap onto the sampler drive head (Fig. 4.26).

7. Lower the hammer assembly and hook the hammer latch over the pull cap. Raise the hammer assembly to pull the sampler completely out of the ground. If a winch is available, it can be used with a pull plate to retract the tool string. A Rod Grip Pull Handle can also be used to retract the tool string.

8. Proceed to Section 4.9 for instructions on recovering the soil core from the MC5 Sampler.

To sample consecutive soil cores, advance a clean sampler down the previously opened hole (Fig. 4.27B) to the top of the next sampling interval (Fig. 4.27C). Drive the tool string the length of the sampler to collect the next soil core (Fig. 4.27D). Switch to an MC5 Center Rod Sampler if excessive side slough is encountered.

NOTE: Use caution when advancing or retrieving the sampler within an open hole. Low side friction may allow the sampler and probe rods to drop down the hole when released. To prevent equipment loss, hold onto the tool string with a pipe wrench when needed.

Figure 4.24. Place drive cap onto sampler drive head.

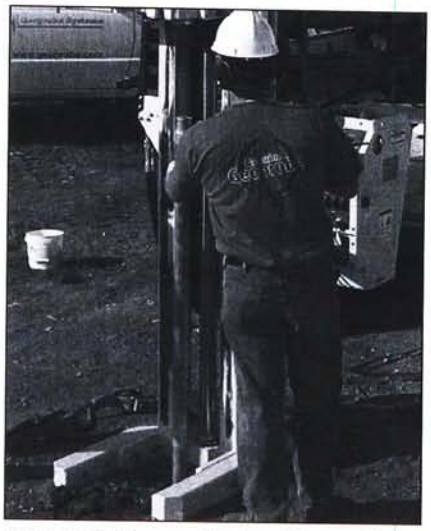

Figure 4.25. The sampler should be parallel to the probe derrick for driving.

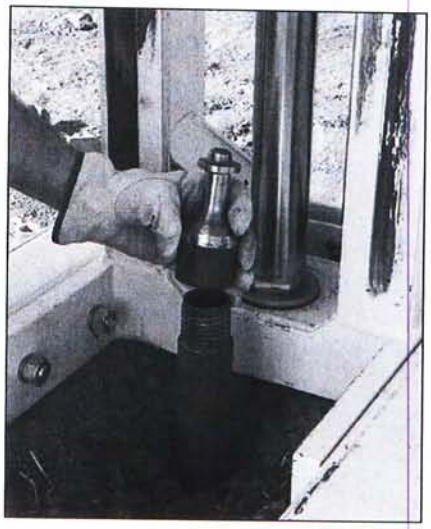

Figure 4.26. The pull cap is one way to remove the sampler from the ground.

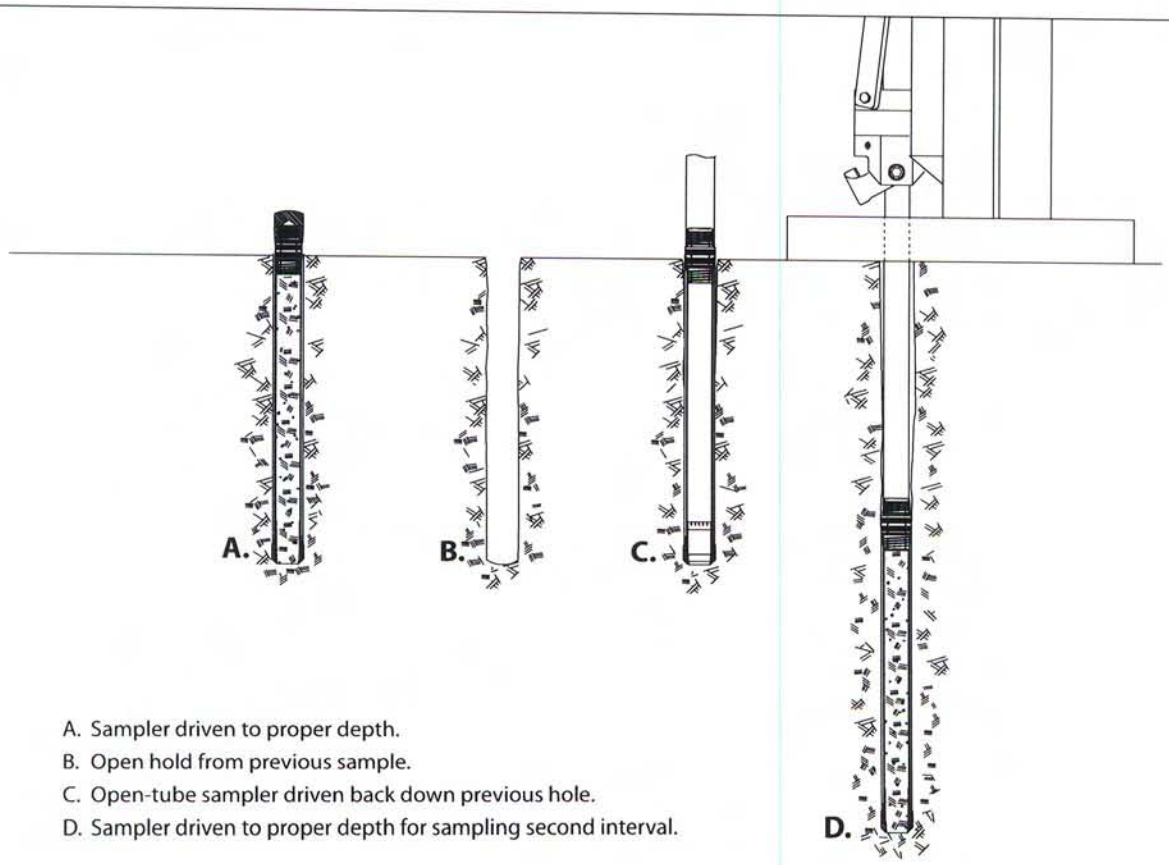

A. Sampler driven to proper depth.
B. Open hold from previous sample.
C. Open-tube sampler driven back down previous hole.
D. Sampler driven to proper depth for sampling second interval.

Figure 4.27
Phases of MC5 Open-Tube Soil Sampling

4.8 Closed-Point Sampling with the MC5 Center Rod System

Material collapsing from the probe hole sidewall can make it difficult to collect representative soil cores from significant depths with an open-tube sampler. To overcome this problem, the MC5 Sampler can be equipped with a center rod assembly that will hold the piston point in place. This allows the sealed sampler to pass through the slough material and then it can be opened at the appropriate sampling interval.

Instructions for operating the MC5 Closed-Point Sampler are given in this section.

1. Place a drive cap onto the center rod and a drive cap onto the drive head of an assembled Closed-Point Sampler (Refer to Section 4.4 for sampler assembly).

2. Raise the probe unit hammer assembly to its highest position by fully extending the probe cylinder.

3. Position the MC5 Sampler directly under the hammer with the cutting shoe centered between the toes of the probe foot. The sampler should now be parallel to the probe derrick. Step back from the unit and visually check sampler alignment (Fig. 4.25).

4. Apply static weight and hammer percussion to advance the sampler until the drive head reaches the ground surface (Fig. 4.28A).

5. Add additional probe rods and 1.25-inch light-weight center rods to the tool string until the desired sampling interval is reached (Fig. 4.28B).

6. Once the sampling interval is reached, remove the center rod string (Fig. 4.28C).

7. Add an additional probe rod to the string and place a drive cap on the probe rod (Fig. 4.28D).

8. Advance the tool string to collect the soil core in the liner (Fig. 4.28E).

   NOTE: Activate hammer percussion whenever collecting soil. Percussion helps shear the soil at the leading end of the sampler so that it moves into the sample tube for increased recovery.

9. Lower the hammer assembly and hook the hammer latch over the pull cap. Raise the hammer assembly to pull the first probe rod out of the ground. Remove the rod and place the pull cap on the next rod of the tool string. Continue pulling probe rods until the MC5 Sampler is brought to the ground surface. If a winch is available, it can be used with a pull plate to retract the tool string. An RG Handle is another option to retract the tool string.

   NOTE: Use caution when advancing or retrieving the sampler within an open hole. Low side friction may allow the sampler and probe rods to drop down the hole when released. To prevent equipment loss, hold onto the tool string with a pipe wrench when needed.

10. Proceed to Section 4.9 for instructions on recovering the soil core from the MC5 Sampler.

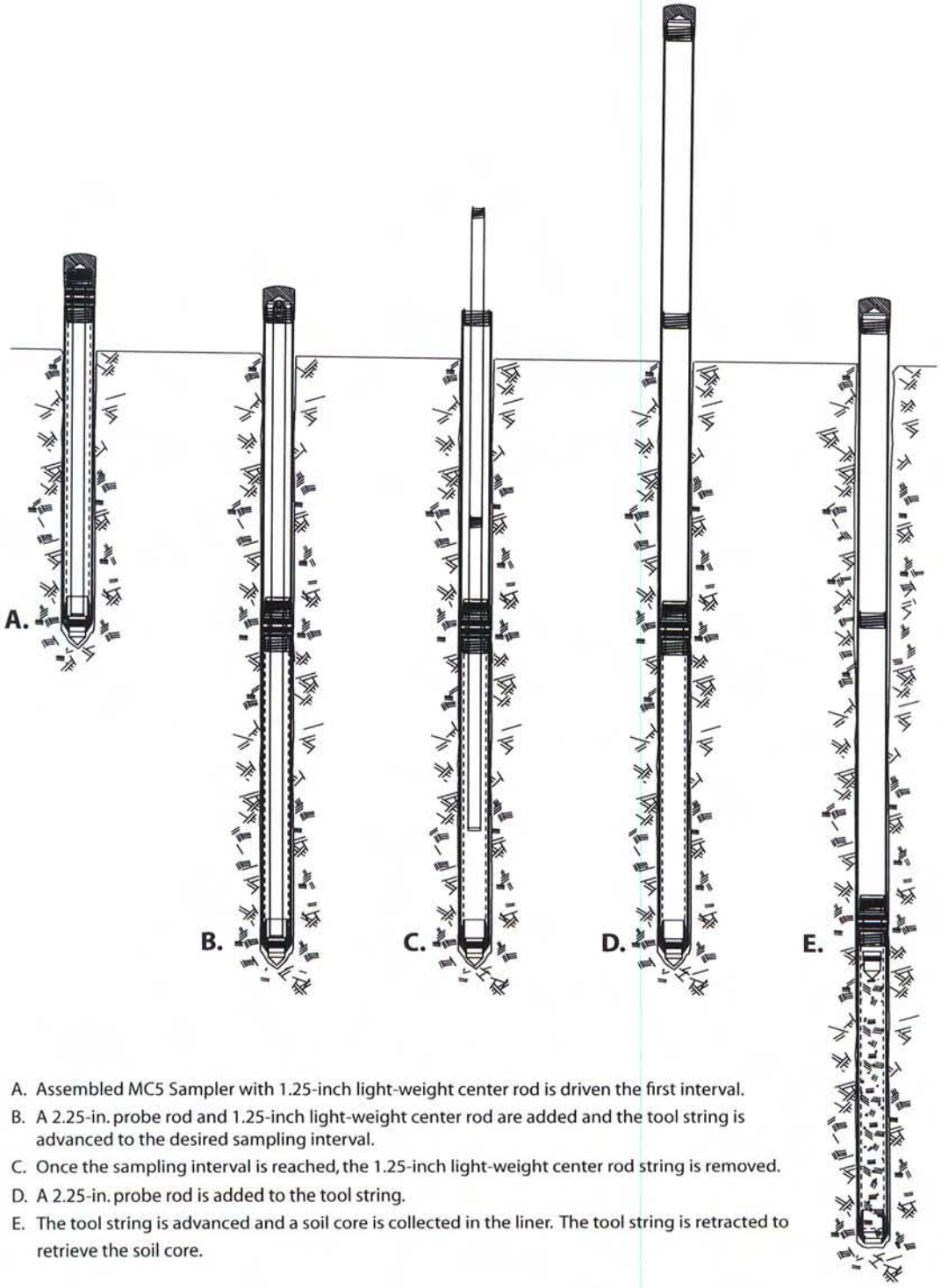

A. Assembled MC5 Sampler with 1.25-inch light-weight center rod is driven the first interval.

B. A 2.25-in. probe rod and 1.25-inch light-weight center rod are added and the tool string is advanced to the desired sampling interval.

C. Once the sampling interval is reached, the 1.25-inch light-weight center rod string is removed.

D. A 2.25-in. probe rod is added to the tool string.

E. The tool string is advanced and a soil core is collected in the liner. The tool string is retracted to retrieve the soil core.

Figure 4.28
Phases of MC5 Closed-Point Center Rod System

4.9 Soil Core Recovery

The soil sample is easily removed from the MC5 Sampler by unthreading the cutting shoe and pulling out the liner (Fig. 4.29). A few sharp taps on the cutting shoe with a pipe wrench will often loosen the threads sufficiently to allow removal by hand. If needed, the exterior of the cutting shoe features wrench flats for attaching a wrench to loosen tight threads. With the cutting shoe removed, simply pull the liner and soil core from the sample tube (Fig. 4.31). A Hydraulic Liner Extruder is also available for mounting on your machine to remove liners (Fig. 4.30).

If the closed-point sampler is used, the piston point is now retrieved from the end of the liner (Fig. 4.32). Secure the soil sampler by placing a vinyl end cap on each end of the liner.

Undisturbed soil samples can be obtained from liners by splitting the liner. The MC Liner (AT8010) is used to make longitudinal cuts along the liner (Fig. 4.33).

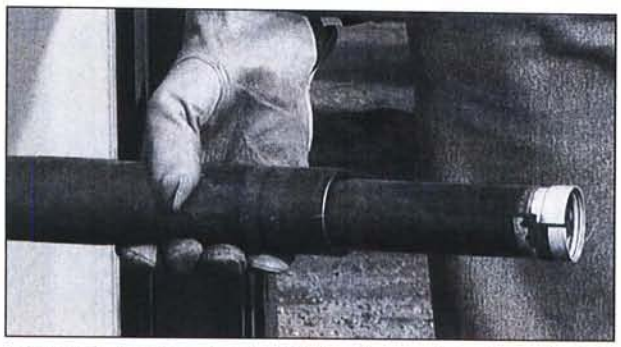

Figure 4.29. Remove the MC5 Cutting Shoe and liner from the MC5 Sampler Tube.

Figure 4.30. The Hydraulic Liner Extruder helps remove the liner.

Figure 4.31. MC5 Liner filled with soil core.

Figure 4.32. MC5 Closed Piston Point is retrieved from the top of the liner.

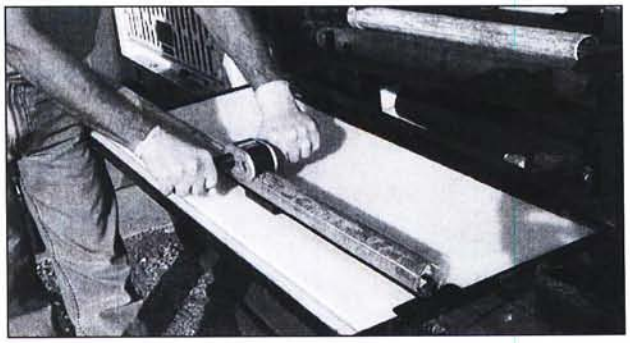

Figure 4.33. MC Liner Cutter makes two longitudinal cuts in PVC Liners.

4.10 Tips to Maximize Sampling Productivity

The following suggestions are based on the collective experiences of Geoprobe® operators:

1. Organize your truck or van. Assign storage areas to all tools and equipment for easy location. Transport sample tubes, probe rods, 1.25-inch light-weight center rods, and liners in racks. Above all, minimize the number of items lying loose in the back of your vehicle.

2. Take three or four samplers to the field. This allows the collection of several samples before stopping to clean and decontaminate the equipment. A system is sometimes used where one individual operates the probe while another marks the soil cores and decontaminates the used samplers.

3. A machine vise is recommended. With the sampler held in a vise, the operator has both hands free to remove the cutting shoe, drive head, and sample liner. Cleanup is also easier with both hands free. Geoprobe® offers an optional machine vise (FA300).

4. Organize your worksite. Practice with the sampler to identify a comfortable setup and then use the layout whenever sampling. A collapsible table or stand is handy to hold decontaminated sampler tubes and liners. Equipment may also be protected from contamination by placing it on a sheet of plastic on the ground.

   Instead of counting probe rods for each trip in-and-out of the probe hole, identify separate locations for "new" rods and "used" rods. Collect the first sample from the open hole using "new" rods. As each probe rod is removed during sampler retrieval, place it in the "used" rod location. Now advance a clean sampler back down the same hole using all of the rods from the "used" location. Add one "new" rod to the string and then drive the tools to collect the next soil core. Once again, remove each probe rod and place it in the "used" rod location as the sampler is retrieved. Repeat this cycle using all the "used" rods to reach the bottom of the probe hole, and one "new" rod to fill the sampler.

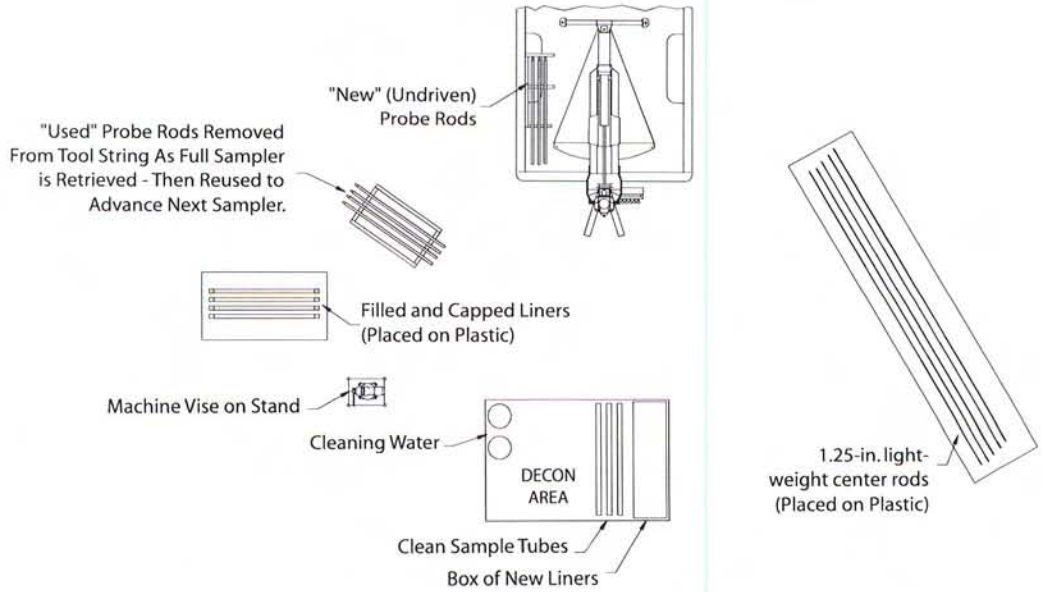

Figure 4.36
Equipment Layout Example to Maximize Sampling Productivity

5. Cleanup is very important from the standpoint of operation as well as decontamination. Remove all dirt and grit from the threads of the drive head, cutting shoe, and sample tube with a nylon brush (BU700). Without sufficient cleaning, the cutting shoe and drive head will not thread completely onto the sample tube and probe rods. The threads may be damaged if the sampler is driven in this condition.

   Ensure that all soil is removed from inside the sample tube. Sand particles are especially troublesome as they can bind liners in the sampler. Full liners are difficult to remove under such conditions. In extreme cases, the soil sample must be removed from the liner before it can be freed from the sample tube.

5.0 REFERENCES

Geoprobe Systems®, 2003. *Tools Catalog, V. 6.*

APPENDIX A
ALTERNATIVE PARTS

Geoprobe® Tools and Equipment	Part Number
Drive Cap, GH40 Series, Threaded, 2.25 in	25362
Drive Cap, GH60 Series, Threaded, 2.25 in	25363
Drive Cap, GH60 Series, Threaded, 2.125 in.	15673
Nylon Brush, Macro-Core® Tool	BU700
Nylon Brush, 2.25-in. and 2.125-in. probe rods	BU2125
Extension Rod Handle	AT69
Extension Rod (60-in.)	10073
Extension Rod (48-in.)	AT671
Extension Rod (36-in.)	AT67

Equipment and tool specifications, including weights, dimensions, materials, and operating specifications included in this brochure are subject to change without notice. Where specifications are critical to your application, please consult Geoprobe Systems®.

Geoprobe Systems®

A DIVISION OF KEJR, INC.

Corporate Headquarters
601 N. Broadway • Salina, Kansas 67401
1-800-GEOPROBE (1-800-436-7762) • Fax (785) 825-2097
www.geoprobe.com

ATTACHMENT D

BHATE SOP NO. 10

SUBSURFACE WATER INVESTIGATION

~~ATTACHMENT D~~

~~GEOPROBE SYSTEMS®~~

~~TECHNICAL BULLETIN NO. MK3139~~

BHATE STANDARD OPERATING PROCEDURE NO. 10

SUBSURFACE WATER INVESTIGATION

The objective of this Bhate Standard Operating Procedure (BSOP) document is to describe Bhate's policies and procedural guidelines for the design, installation, and construction of piezometers and groundwater monitoring wells to be completed in unconsolidated portions of water-bearing geologic materials. This document also provides procedures for well development, groundwater sampling, and hydraulic testing. Site-specific procedures will depend on project objectives, geologic conditions, and appropriate State and Federal regulations and standards.

This page intentionally blank.

BSOP NO. 10

SUBSURFACE WATER INVESTIGATION

TABLE OF CONTENTS

1 Monitoring Well Investigation 1-1

1.1 Objective 1-1
1.2 Procedure 1-1
1.2.1 Well Design Specifications 1-1
1.2.2 Borehole Completion 1-3
1.2.3 Well Construction 1-3
1.2.4 Double Cased Wells 1-5
1.2.5 Well Head Completion 1-6
1.2.6 Documentation and Recording 1-7

2 Fluid Level Measurement and Recording 2-1

2.1 Objective 2-1
2.2 Procedure 2-1
2.2.1 Fluid Level Measuring Reference Point 2-1
2.2.2 Electrical Tape Method 2-2
2.2.3 Continuous Recording 2-2
2.2.4 Interface Probe Methods 2-3
2.2.5 Data Reporting 2-3
2.2.6 Climatic Monitoring (Continuous/Non-Continuous) 2-4

3 Well Development 3-1

3.1 Objective 3-1
3.2 Procedure 3-1
3.2.1 Criteria and Well Development Documentation 3-4

4 Monitoring Well Sampling 4-1

4.1 Objective 4-1
4.2 Procedure 4-1
4.2.1 Pre-Sampling Trip Preparation 4-1
4.2.2 Initial Activities 4-2
4.2.3 Well Evacuation 4-3
4.2.4 Sample Collection 4-5
4.2.5 Labeling and Handling Requirements 4-5
4.2.6 Collection of Quality Control Samples 4-6
4.2.7 Field Equipment Cleaning Procedure 4-6
4.2.8 Field Documentation Procedure 4-7

5 Hydraulic Testing 5-1
5.1 Single-Well Aquifer (Pumping) Testing 5-1
5.1.1 Objective 5-1
5.1.2 Procedure 5-1
5.1.2.1 Slug Test Design 5-1
5.1.2.2 Slug Test Execution 5-2
5.1.2.3 Post Operation 5-4
5.2 Multiple-Well Aquifer (Pumping) Testing 5-5
5.2.1 Objective 5-5
5.2.2 Procedure 5-5
5.2.2.1 Pumping Test Design 5-5
5.2.2.2 Test Site Selection 5-9
5.2.2.3 General Testing Procedures 5-9
5.2.2.4 Aquifer Pre-Test 5-10
5.2.2.5 Step Drawdown Tests 5-11
5.2.2.6 Single and Multiple Well Constant Yield Tests 5-13
6 References 6-1

Attachments

1-1 Monitoring Well Installation Detail Form
1-2 Casing/Well Screen Tally Form
2-1 Water Level Data Summary Form
3-1 Monitoring Well Development Log
4-1 Field Data Information Log for Groundwater Sampling

1 MONITORING WELL INVESTIGATION

1.1 Objective

It is the policy of Bhate to design, install, and construct monitoring wells in a manner that ensures that all wells installed meet the criteria of being 1) adequately sealed to prevent surface contamination or cross contamination between aquifers; 2) capable of yielding high quality groundwater samples representative of true water quality within the target unit; 3) adequately protected; and 4) in compliance with all applicable State and federal regulations. The procedures set forth in the section apply to all Bhate and contract personnel who are responsible, both directly and indirectly, for the design of monitoring well systems, for oversight of drilling and construction operations, and for evaluation of the suitability and reliability of monitoring wells and data and measurements obtained from monitoring wells.

1.2 Procedure

Monitoring wells are installed primarily to provide information on the hydrogeology of a site and to determine the extent of migration of contaminants, if any. Well permits will be obtained prior to initiating construction, repair, or abandonment of any monitoring well. The drilling subcontractor, who must be certified in the appropriate state, will obtain the permits. The certified well driller or his representative must be present at the site during all drilling operations. All drilling personnel must meet all applicable OSHA requirements. The supervising hydrogeologist must be fully knowledgeable and experienced with federal and state requirements/regulations for groundwater monitoring programs.

Site-specific work plans will specify drilling methods to be used, and will present proposed well design and construction details. The drilling methods, well design, and well construction will adhere to the criteria and methodologies presented in this document. The proposed well design will be based on existing subsurface and groundwater fluctuation data. The design will present these data with the grain size of the filter pack and a discussion of the procedure to be used in the field for determining screen placement. All equipment, well materials and tools that will enter the borehole must be steam cleaned with a high temperature pressure washer (water at 200°F and 1,500 psi) prior to installation. The cleaned materials will be wrapped in clean Visqueen plastic and protected from possible contaminants. If needed, they will be steam cleaned again immediately before installation. The specifications presented herein are to be adhered to unless a site-specific variance has been granted by the appropriate authorities.

1.2.1 Well Design Specifications

Well Screen

In general, the standard monitoring well screen installed at a site will consist of a 2-inch inside diameter Schedule 40 PVC screen with 0.010 inch slots. If site specific conditions warrant, well

screen materials will be designed based on site specific data or selected depending upon the known or suspected chemical contaminants at the site, and so that the completed monitoring well provides data, which meet the project data quality objectives. Monitoring well screens will be sized to retain over 90% of the filter pack. Well screen materials will be of the same size and strength material as the well riser, and will be a non-contaminating, continuous wrap design. Factory-slotted screens will be acceptable for USACE projects as long as the suspected contaminants do not include those that have an affinity for sorbing onto soil particles (e.g., PCBs and PAHs) or metals. In such cases, continuous-wrapped screen will be required. No glues, adhesives, lead shot, or lead wool will be used to connect the riser sections or screen. No field-slotted screen will be permitted.

Filter Pack

The filter pack material will be clean, washed, well-rounded silica sand sized to perform as a filter between the formation material and the well screen. Proper documentation will be furnished concerning the composition, grain-size distribution, cleaning procedure, and chemical analysis. The filter pack gradation shall have a uniformity coefficient (C_u) of not more than 2.5, and shall be sized so that the slotted screen will retain 90 percent of the material.

The standard filter pack material used for monitoring wells will typically conform to the size appropriate for slot screen. The following table provides the appropriate sized filter pack material in accordance with ASTM D 5092-90 (ASTM, 1990).

Table 1-1. Grain Size Distribution Chart

Size of Screen Opening, mm (in.)	Slot No.	Sand Pack Mesh Size Names(s)	1% Passing Size (D-1), mm	Effective Size (D-10), mm	30% Passing Size (D-30), mm
0.125 (0.005)	5	100	0.09 to 0.12	0.14 to 0.17	0.17 to 0.21
0.25 (0.010)	10	20 to 40	0.25 to 0.35	0.4 to 0.5	0.5 to 0.6
0.50 (0.020)	20	10 to 20	0.7 to 0.9	1.0 to 1.2	1.2 to 1.5
0.75 (0.030)	30	10 to 20	0.7 to 0.9	1.0 to 1.2	1.2 to 1.5
1.0 (0.040)	40	8 to 12	1.2 to 1.4	1.6 to 1.8	1.7 to 2.0
1.5 (0.060)	60	6 to 9	1.5 to 1.8	2.3 to 2.8	2.5 to 3.0
2.0 (0.080)	80	4 to 8	2.0 to 2.4	2.4 to 3.0	2.6 to 3.1

In addition to the primary filter pack installed along the screened interval of the monitoring well, a secondary filter pack consisting of finer material will be installed to prevent bentonite pellets from commingling with the primary filter pack.

Well Riser

Well riser (casing) will consist of polyvinyl chloride (PVC) or stainless steel. PVC pipe will be new, threaded, flush-jointed, and as a minimum, conform to the requirements of ASTM F480-81/SDR 13.5 (Schedule 40). PVC pipe will bear markings identifying the material as that specified, and will carry the seal of the National Sanitation Foundation. Stainless steel pipe will consist of new, flush-jointed, and threaded, Type 304, corrosion-resistant steel. Unless noted in the site-specific work plans, monitoring wells will be 2-inch inside diameter (ID).

Bentonite Seal

The bentonite seal will be composed of commercially manufactured sodium bentonite pellets, which do not exceed 0.25-inch diameter. Clean, potable water will be used to hydrate the bentonite.

Annular Seal

The cement grout will consist of a mixture of Portland Cement (ASTM C 150-00) and water in the proportion of approximately 6 to 7 gallons of approved water per bag of cement (94 pounds). In addition, 3 to 5 percent by weight of sodium bentonite powder will be added. The minimum acceptable grout weight will be 14 pounds per gallon (lbs/gal). The cement grout weight will be determined using a mud balance. Water may be added to the mix in small amounts, at the discretion of the field geologist, to achieve pumpability.

1.2.2 Borehole Completion

Procedures for the drilling and advancement of soil borings are presented in BSOP No. 1, Section 4. Drilling techniques employed must minimize disturbance of subsurface samples and must not introduce contamination to the subsurface or allow contaminants, if any, in shallow hydrogeologic units to migrate to deeper units. A Monitoring Well Installation Detail Form (Attachment 1-1) will be completed for each monitoring well. This form includes a comprehensive list of pertinent drilling hydrogeologic and monitoring well construction information.

1.2.3 Well Construction

At all times during the progress of the work, precautions will be taken to prevent tampering with the well or the entrance of foreign material into it. Run-off will be prevented from entering the well during construction.

Depending on site conditions, consideration should be given to overdrill the borehole so that soils that have not been removed or that have fallen into the borehole during auguring or drill stem retrieval will fall to the bottom of the borehole below the depth of the filter pack and the screen. Normally 3 to 5 feet are sufficient for overdrilling. Once the desired depth of the borehole has been attained, the borehole will be prepared for installation of the well casing and

screen. If drilling fluid was used, it must be flushed from the borehole with clean potable water to the extent possible without causing borehole collapse. The well casing/screen assembly will then be inserted into the borehole. For wells that are being installed beneath a confining or semi-confining unit, or are intended to monitor deep members or portions of an aquifer, the well casing/screen assembly will be installed within pre-set surface casing, to prevent cross-connections between different aquifer zones. If a well cannot be properly completed to prevent such an interchange of water between water-bearing zones or to prevent a loss of artesian pressure, the well will be abandoned and plugged.

The casing/screen assembly will be installed as follows:

1. Prior to installation of the casing and screen, the lengths and diameters of all components (including the bottom plug or cap) will be measured and recorded on the Casing/Well Screen Tally Form (Attachment 1-2). The casing riser and screen assembly will be installed round, plumb, and true to line.

2. A bottom plug will be attached to the bottom of the screened section.

3. The well screen will be connected to the riser sections of the casing assembly. For wells intended to monitor the upper surficial aquifer near the water table, the well screen will be installed so as to straddle the free water surface, extending both above and below the water table to accommodate seasonal or other variations in its elevation. In all cases, the top of the screen will be located at least 2 feet below the base of the down-hole seal. Screen slot size will be 0.10 inches, or the appropriate size based on grain-size distribution analyses and filter back design, as discussed above.

4. For wells installed to depths exceeding 50 feet, centralizers will be placed at locations just below the screen, just above the location of the bentonite seal, and at 50-foot intervals along the riser casing. Stabilizers will not be used if their installation prevents the placement of the annular materials.

5. Well risers will extend at least 2.5 feet above the ground surface, unless well casings must be completed at ground surface level as specified by the client or mandated by site conditions and planned use of the well. If a flush finish completion is conducted, the placement of annular materials will be done in such a way that the inside of the well casing is protected, i.e., the protective vault will be waterproof and strong enough to support anticipated loads.

6. The primary filter pack will be placed in the annulus between the well material and borehole using a tremie pipe, starting with the tremie at the bottom of the borehole and working the tremie upward as the filter pack is placed. When using hollow stem augers (HSAs), the augers will be raised incrementally during the installation of the filter pack. Attempts will be made to keep the bottom of the augers below the top of the filter pack during installation. The level of the top of the filter pack in the annulus will be continually verified by tag-line measurement during placement. The filter pack will extend at least 2 feet above the top of the screen. The volume of the installed filter pack will be compared with the annular volume

to verify proper placement of the filter pack. This material accounting will be recorded in the field book.

7. A secondary filter pack, at least 2 feet thick and consisting of material finer than the primary filter pack, but of similar composition, will be placed in the annulus between the primary filter pack and the overlaying bentonite seal. This secondary filter is intended to prevent movement of the seal or grout (or both) into the underlying primary filter pack.

8. A bentonite seal at least 2 feet thick will be placed in increments of four 6-inch lifts immediately above the filter pack. Pouring of the pellets is acceptable for boreholes less than 50 feet where the annular space is large enough to limit the potential for bridging and to allow measurements to ensure that the pellets have been placed at proper intervals. For depths greater than 50 feet, the bentonite pellets will be installed through a tremie pipe. The bentonite pellet seal will be hydrated either by pouring water or utilizing the tremie pipe with an approximately equal volume of clean, potable water, and allowed to hydrate a minimum of 30 minutes between lifts before proceeding. If water is used, its source and the volume used should be documented in the field book. After the placement of the final lift, the bentonite seal will be allowed to hydrate another 2 hours before grouting the remaining annulus. The level of the top of the bentonite seal will be verified by tag-line measurement prior to grouting. When using HSAs, the bottom of the augers will be left in the borehole as close as possible above the bentonite seal.

9. To grout the remaining annular space, a side-discharging tremie pipe will then be maintained 3 feet above the bentonite seal and will be used to slowly place the cement/bentonite grout mixture. When using HSAs, the augers will be pulled incrementally during the grouting procedures to limit borehole collapse. Grout will be pumped into the annulus through the tremie pipe until undiluted grout flows from the borehole at the ground surface. The grout will be allowed to cure for at least 24 hours prior to development.

1.2.4 Double Cased Wells

Surface casing will be installed in the borehole when drilling a monitoring well that will be installed at depths below relatively impermeable (confining) layers or below depths of known contamination. The purpose of the surface casing is to prevent cross-contamination between two aquifer zones and to prevent dragging contamination down to a greater depth during the drilling procedure.

A pilot borehole should be drilled and the surface casing installed to slightly below the known depth of contamination or a minimum of 2 feet into the confining layer. The diameter of the surface casing will be sufficient to contain the inner casing and a 2-inch annular space. The size of the borehole should be sufficient to maintain a 2-inch annular space between the borehole walls and the surface casing. The material of the surface casing may vary, but it will be chemically inert and able to withstand potential chemical degradation and any forces exerted on the casing during its installation and monitoring well construction.

The outer casing should be grouted by the tremie method from the bottom to within 2 feet of the ground surface. The grout should be pumped into the annular space between the outer casing and the borehole wall. This will be accomplished by either placing the tremie tube in the annular space and pumping the grout from the bottom of the borehole to the surface, or placing a grout shoe or plug inside the casing at the bottom of the borehole and pumping the grout through the bottom grout plug and up the annular space on the outside of the casing. If the casing is set into very tight clay, both of the above methods may have to be used, because the clay usually forms a tight seal in the bottom and around the outside of the casing preventing grout from flowing freely during grout injection. A minimum of 24 hours will be allowed for the grout seal to cure before attempting to drill through it. The grout mixture used to seal the outer annular space will be a neat cement mixture of one 94-lb bag of Type I Portland Cement per approximately 7 gallons of water and 3 to 5 percent bentonite powder by weight.

When drilling through the seal, care will be taken to avoid cracking, shattering, and/or washing out the seal. If caving conditions exist such that the outer casing cannot be sufficiently sealed by grouting, the out casing should be driven into place and a grout seal placed in the bottom of the casing. Removal of outer casings, which are sometimes called temporary surface casings, after the well screens and casings have been installed and grouted, is not acceptable. Trying to remove outer surface casings after the inner casings have been grouted could jeopardize the structural integrity of the well. The boring will be advanced through the surface casing to the target depth for monitoring well installation. The borehole beneath the surface casing will be of sufficient diameter to maintain a 2-inch annular space between the monitoring well and the borehole well.

1.2.5 Well Head Completion

Upon completion of the well, a suitable vented cap will be installed on the top of the well riser. The well riser will be surrounded by a larger diameter protective steel or PVC casing rising approximately 3 feet above ground level and set a minimum of 2 feet below the ground surface into the cement grout backfill. A drain hole at least 0.25 inches in diameter will be drilled at the base of the protective casing. The protective casing will be provided with a locking cap and a brass padlock or the well casing will be secured with a plastic expansion cap locked with a hexagonal key. All locks used at a particular site will be keyed alike. If wells are required to be finished flush with the grout or pavement, these will be fitted with a watertight, flush-mounted, traffic-rated steel cover at least 6 inches larger in diameter than the well riser. The well casing will be secured with a plastic expansion cap locked with a hexagonal key.

A minimum 3-foot by 3-foot by 4-inch thick concrete pad, sloped away from the well, will be constructed around the monitoring well with the top outer edge at the final ground elevation. At locations where vehicular traffic is likely, the concrete pad will be reinforced with reinforcement wire or rebar. Three or four 3-inch diameter or larger concrete-filled steel or PVC posts will be equally spaced around the well and cemented in place around the concrete pad. The base of these posts shall extend 2 feet bls and be appropriately 3 feet tall. Metal rebar may be installed inside the posts for additional stabilization. The concrete pad surface immediately surrounding

the top of the well will be sloped away from the well. After the well is installed, the area will be cleaned and all discarded material will be properly disposed.

1.2.6 Documentation and Recording

In addition to providing standard field documentation procedures, a Monitoring Well Construction Form (Attachment 1-1) will be prepared to provide an accurate "as-built" diagram of each well and will include the following information:

- Project and site names, well number and the total depth of the completed well
- Depth of any grouting or sealing, and the amount of cement and/or bentonite used, and to the total borehole depth and elevation
- Depth, elevation, and type of well casing
- Installation date or dates, and name of the driller and the geologist installing the well
- All pertinent construction details of monitoring wells, such as depth to and description of all annular fill materials; gradation of filter packs; length, location (depth and elevation), diameter, slot size, material, and manufacturer of well casing and screen; position of centralizers; and location of any blank pipe or intermediate casing installed in the well
- Description of surface completion, including protective steel casing, protective pipes, and concrete surface seal
- Surveyed coordinates and elevation of top of ground and top of well riser. The accuracy of the survey points will be in accordance with BSOP No. 11.
- A brief stratigraphic log, showing depths to and descriptions of major lithologic changes encountered in the well borehole

A discussion of information to include in the boring logs is presented in BSOP No. 1. All original well record form, field report forms and geologist logs will be maintained in the project file.

This page intentionally blank.

2 FLUID LEVEL MEASUREMENT AND RECORDING

2.1 Objective

This section presents procedures and guidelines for measuring groundwater and free product levels in monitoring wells. Consistent repeatable data should be obtained.

2.2 Procedure

Groundwater and product fluid levels are measured to determine the existence and nature of fluids in subsurface aquifer systems, and to evaluate fluid potential for hydraulic movement within and between hydrogeologic units during static and pumping conditions.

Water level measurements used to define the water table or a single potentiometric surface should be collected within a 24-hour period. Water level measurements should be taken within a shorter time interval if an aquifer is being significantly influenced by a recharging or discharging mechanism. Tides, river stages, impoundments, storm water drainages, and production pumping of irrigation and supply wells all can significantly affect the potentiometric surface over a brief period of time (U.S. EPA, 1992).

Water level measurement equipment will be constructed of materials that are chemically inert and which are not prone to sorption or desorption.

Before collecting water level measurements for potentiometric maps, the water levels in piezometers and wells should be allowed to recover for a minimum of 24 hours after installation/construction, well development, for purging. When collecting water levels at a site, measurements should be collected from wells in order of most contaminated to least contaminated, if known. This order typically follows collecting water levels from wells located in the most upgradient position to the most downgradient position. It is important to recheck water levels in all wells approximately 15 minutes after the initial measurement, to ensure the water levels have stabilized. If different readings are indicated, recheck the water levels until they have stabilized. Fluid level measurements will be recorded on Water Level Data Summary forms (Attachment 2-1).

2.2.1 Fluid Level Measuring Reference Point

Fluid level measurements are to be made from the top of the permanent well casing. The reference point will be marked near the north side of the casing using a permanent marker. All fluid levels are measured as depth from the reference point. This reference point must be surveyed for vertical elevation so that fluid level depths may be converted to elevations.

2.2.2 Electrical Tape Method

The use of an electrical tape to measure fluid levels is simple and convenient. The device consists of an electrode suspended by a pair of insulated wires. An ammeter, indicator light, or audible signal is used to indicate when the electrode touches the water surface. Batteries supply the current. This method is also known as the electric sounder method.

The procedures for this method are as follows:

1. Check batteries before going to the field and carry an ample supply of spares.

2. Turn power switch "ON".

3. Decontaminate tape and probe upon arrival to a site and between measurement in different wells or piezometers, as outlined in BSOP No. 13.

4. Lower probe into the well until a sharp deflection is noted on the meter, the indicator light is illuminated, or the audible tone is activated.

5. Verify that the electrode is functioning properly and is indicating the water surface with the same depth each time by moving the probe up and down several times.

6. Hold the probe cable at the measuring point location on the well pipe at the exact depth where the probe indicates the water surface to be. Record the reading to the nearest 0.01 foot.

7. Remove the probe from the well.

2.2.3 Continuous Recording

The measurement of groundwater elevations within pumping or monitoring wells can be accomplished by use of a mechanical or digital-analog, computerized, continuous recording system, and should be performed according to specifications given by the manufacturer of each unit. In general, when using either the mechanical or digital system, the pressure or electrical transducer is lowered into the well until it intersects the water surface. The actual fluid depth is then measured by the method described above, and is used to calibrate the continuous recorder. The field geologist is responsible for making proper adjustment. Proper maintenance of continuous recording devices during level monitoring should be performed by the field geologist so that continuous, permanent records are developed for the specified period of time. Records shall be sorted on mechanical graph paper or on a microprocessor. Frequent calibrations of equipment should also be made by the field geologist during monitoring periods of long duration. Calibration methods vary depending on the type of recording device used. Specific manufacturer's calibration procedures must be followed.

2.2.4 Interface Probe Methods

When opening wells that may contain non-aqueous phase liquids (NAPLs, a.k.a., free product), the air within the well head should be monitored to determine the potential for fire, explosion, and health and safety hazards. If light non-aqueous phase liquids (LNAPLs) are present, interface gauging will be used to differentiate between the water table and the surface of the immiscible layer.

For measurement of free product levels, a hydrocarbon interface probe gives different signals (e.g., constant versus intermittent) for the groundwater and free product surfaces. The procedures for this method are as follows:

1. Follow steps 1 through 3 of the electrical tape method.

2. Lower the probe into the well until an audible tone sounds, indicative of exposure to an organic liquid.

3. Hold the interface probe cable at the measuring point location on the well pipe at the exact depth where the probe indicates the organic liquid surface to be. Record the depth below top of casing to the organic liquid surface to the nearest 0.01 foot.

4. Slowly continue lowering the interface probe until the organic liquid/water interface is reached, indicated by the respective audible tone.

5. Move the interface probe slowly up and down to verify that it is functioning properly and is indicating the interface at the same depth each time.

6. Hold the probe cable at the measuring point location on the well pipe at the exact depth where the probe indicates the organic liquid/water interface to be. Record the depth below top of casing to the interface to the nearest 0.01 foot.

2.2.5 Data Reporting

All water level field data are to be entered in field log books or on an appropriate Water Level Data Summary form and will include the following information:

- Date (at top of page)

- Time recording is made

- Station location (monitoring well or piezometer identification)

- General comments about condition

- Measuring point, usually top of casing (TOC)

- Depth to product (if measured), to nearest 0.01 foot
- Depth to water, to nearest 0.01 foot

Field notes should also include the serial number of any measurement or recording device. If more than one device is used, indicate which device is used for each measurement.

2.2.6 Climatic Monitoring (Continuous/Non-Continuous)

The continuous and non-continuous monitoring of climatic conditions can be performed through the set-up and maintenance of a weather shed at the specified site. Specific instruments and measuring devices to be employed include, but are not limited to, rain gauges, hydrographs, barometers, thermometers, and any other site-specific instruments. Actual field monitoring of instruments should be performed according to methodologies described in NOAA (1972). It is the responsibility of the field geologist to maintain and preserve appropriate monitoring equipment throughout the specified monitoring interval and to retain all data for future use.

3 WELL DEVELOPMENT

Well development represents the attempts to restore the volume of aquifer material immediately surrounding the screened portion of the well to its indigenous condition by correcting damage done to the formation during the drilling process. Well development can be accomplished in many different ways. The effectiveness of the different methods are based on three primary factors:

1. The type of geologic material

2. The design and completion of the well

3. The type of drilling technology used in the borehole advancement and well installation

The discussion below presents the objectives of monitoring well development. It also describes the procedures that may be used to effectively develop a well. The actual procedures used will be dependent on site-specific, and possibly even well-specific, conditions. Personnel responsible for well development are encouraged to read U.S. EPA (1996), Aller (1989), and ASTM (1994) for more detailed discussions of well development philosophy, procedures, and criteria.

3.1 Objective

The primary objective of installing a monitoring well at a site is to collect a groundwater sample that is representative of the quality of groundwater surrounding the well. Well development is an important component of monitoring well completion. Monitoring wells should be sufficiently developed to ensure that they meet their intended objectives. The purposes of well development are the following:

- Assure that groundwater enters the well screen freely and at ambient velocities, thus yielding a representative groundwater sample and an accurate fluid level measurement.

- Remove all water and drilling additives that may have been introduced into the borehole and formation during drilling and installation activities.

- Remove fine-grained sediments entrained in the filter pack and within the well itself so that groundwater samples have a minimal turbidity and excessive silting of the well does not occur.

3.2 Procedure

Well development should ensue within 1 week after completion of the well, but no sooner than 24 hours after the grouting is completed. Well development can be performed using one or more of the following methods: bailing, surging, overpumping, or jetting. As noted above the method

used will be based on site-specific conditions. It is anticipated that for the majority of the monitoring wells, the predominant development methods will be surging and overpumping. It is important to realize that effective development of a well requires the movement of fluids both into and out of the screen parts of the well and the surrounding filter pack. No dispersing agents, acids, or explosives will be utilized in well development activities. The water level and height of sediment in the well should be measured and recorded in the field log book prior to development, as discussed below. All development equipment inserted into the well will be decontaminated in accordance with BSOP No. 13.

In most cases the initial well development method will be hand bailing to remove accumulated sediment in the well. The bailer will be allowed to fall freely through the well past the water surface until it strikes the bottom of the well. The bailer will be raised to the surface vigorously to create a high action level of water movement. This free fall and rapid removal will provide some surging action to the filter pack and proximal formation material. To enhance the removal of sediment, the bailer should be intermittently agitated by rapid short upward strokes from the bottom of the well. Bailing should be continued until the water is free from suspended sand-sized sediment.

A surge block may be needed to create a stronger surging action than the bailer does. If this is the case, the surge block and the bailer should be used in conjunction with each other. After utilizing the surge block for a short period of time, the sediment that entered the well as a result of the surging should be removed with the bailer, as described in the previous paragraph. The surge block will be composed of inert material that will not affect the water quality in the well. The diameter of the surge block should be 0.125 to 0.25 inches smaller than the inside diameter of the well. Caution should be employed to ascertain that the block can move freely up and down the inside of the well without obstructions. The vertical action of the surge block will be accomplished either manually or mechanically with drill rods or wire line. Care should be taken in the length of the strokes, the velocity of the up and down movement, and the duration of each surge block cycle. If the surging action is too vigorous for the well construction and formation characteristics, then the activity can be detrimental to the well integrity. Detailed discussions are presented in Aller (1991) and ASTM (1994); responsible personnel should review these discussions before beginning well development with the surge block method.

Following the removal of suspended sand-sized sediment, the well development process should include overpumping the well with a submersible electric pump (e.g., Grundfos Redi-Flo2™). Commonly, the overpumping method will be employed in the latter stages of well development. In overpumping, the pump is operated at a capacity that substantially exceeds the yield of the formation (i.e., the capacity of the formation to deliver water to the well). This flow velocity well exceeds the flow velocity that will be induced during the purging process of well sampling.

If the monitoring well was installed using a mud rotary method, then it is recommended that water jetting be considered as a component of well development to break down the mud cake that may line the borehole walls. The particles of the mud cake can then be brought into and removed from the well by overpumping. The construction of the well should be considered

when evaluating this process. For instance, the effectiveness of jetting is commonly reduced by the fine slot sizes (0.010 inch) of many monitoring wells. In addition, any sediment entrained in the jetting fluids may cause damage to a screen composed of PVC materials. As noted above, no dispersing agents will be utilized in the jetting of a well.

It is recommended that development with air (e.g., airlift pumping) not be employed, because the introduction of air to the formation could change the chemical environment of the aquifer (e.g., redox potential) and reduce the hydraulic conductivity of the formation.

During well development, the entire well cap and interior of the well casing above the water table should be washed using only water from that well. Water exiting the well will be contained and properly disposed of, as warranted, based on-site conditions. If the addition of water is required to facilitate surging and bailing, only formation water from that well will be used. For water jetting, the water quality must be verified prior to the introduction of any water from a source other than the well itself.

In some cases, such as the need to sample a well in a short time frame because of limited site access, preliminary well development is necessary. Preliminary well development may be conducted after installation of the well screen, casing and filter pack, but prior to installation of the bentonite seal and grout. Additional filter pack will be added, as needed, after completion of the preliminary well development to bring the filter pack up to the desired depth after settlement that may have occurred. Preliminary well development may consist simply of pumping fresh water for a brief interval (several minutes) through the well screen to flush drilling mud from the filter medium, or can include surging and pumping of the well.

All preliminary well development will be completed within 1 day after the screen, casing, and filter pack are installed. If soils above the screened aquifer are known or suspected to contain hazardous constituents, preliminary well development will be restricted to flushing the filter medium briefly through the screen. All other development efforts will then conducted after the bentonite seal and grout has been place and allowed to set.

Since preliminary well development is conducted prior to the installation of protective casings and surface pads, the borehole must be protected. Soil will be mounded around the base of the exposed well casing prior to development, in order to direct run-off away from the well annulus.

The person responsible for well development should inquire if any special circumstances apply to monitoring wells that contain free product. There may be instances where development of such wells results in the vertical spreading of contaminants through the aquifer matrix. In these cases, development may entail only the inward movement of water and materials toward the well.

3.2.1 Criteria and Well Development Documentation

Development criteria will include the stabilization of standard field parameters. These criteria will be refined, based on initial results at each site, with the objective of achieving minimum turbidity in all wells.

During the pumping stage of development pH, specific conductivity, dissolved oxygen, oxidation-reduction, temperature, and turbidity will be measured generally once every well volume removed. For wells that have a short water column (for instance, in wells screened across the water table), it may be more practical to measure the field parameters at greater intervals. In addition, due to the typically turbid nature of most groundwater monitoring wells, it is routinely necessary to remove significant volumes of purge water to obtain turbid free water. Therefore, in these cases it is more practical to measure the field parameters at greater intervals. The development of a well will be continued until the following conditions have been met:

- The duration of the well development has been at least 2 hours.
- The field parameters (pH, specific conductivity, oxidation-reduction, dissolved oxygen, and temperature) have stabilized for four consecutive measurement events (less than a change of 0.2 pH units and less than a 10 percent change for the other parameters between four consecutive readings).
- The turbidity has been significantly decreased. Attempts will be made to attain turbidity values of 5 nephelometric turbidity units (NTUs) or less for four consecutive measurement events. However, it should be recognized that the groundwater at some locations is naturally turbid because of organic or inorganic colloids. The meeting of these criteria will be evaluated by a senior geologist on a well-specific basis.
- The yield of the well is representative of the transmissivity of the aquifer. For wells that were installed with the mud rotary method, mud cake on the borehole the walls may reduce the yield of the well. If this occurs, development should continue until the mud cake is removed and the yield increases.

If field parameters stabilize, but the water remains turbid, the well, filter pack, and/or borehole walls may still contain construction materials, such as mud cake that has not been removed from the borehole walls. Excessive or thick drilling muds may not be efficiently flushed out of a borehole by purging only. In this case, surging or jetting methods may be needed to be applied.

Measurement of field parameters will documented on a Monitoring Well Development Log (Attachment 3-1) which will include the following information:

- Date and weather
- Summary of well construction

- Pre-development water level
- Measured height of sediment (if any) at bottom of well prior and after the development activities and the detected changes in this height during development
- Time of each measurement
- Cumulative total volume of water removed prior to each measurement
- Volume of water removed between measurements
- Pumping rate
- Method of development and duration employed
- Time and duration of cessation of development
- Results of field parameter measurements, and volume of suspended particles in water

Additional observations such as apparent yield of the well or detected odors should also be noted on the development log.

Eight-ounce clear glass jars will be used to collect samples of the pre-development water and the last water withdrawn from the well at the cessation of development. These samples will be labeled and photographed with a 35mm color photograph. The photograph should be taken following agitation of the jar contents by shaking, and prior to the settlement of fines in the jar. In addition, the photograph will be a suitably backlit close-up that shows water clarity. These photographs and samples will be stored throughout the duration of the project at an appropriate facility for later observation if needed. It should be noted that this procedure will be conducted on a site/client specific basis and may not apply to all projects.

This page intentionally blank.

4 MONITORING WELL SAMPLING

4.1 Objective

The objective of this section is to provide procedures for the sampling of groundwater monitoring wells. These procedures were designed so that the groundwater samples will be of verifiable and legally defensible quality. To ensure that this goal is achieved, sampling protocols must be strictly followed and sample collection and handling must be properly documented in field log books, groundwater sampling logs, Chain-of-Custody forms, and project files. This procedure applies to all personnel who are responsible, both directly and indirectly, for groundwater sampling and the evaluation of analytical results from groundwater samples.

4.2 Procedure

This section presents procedures to be followed for collection of groundwater quality samples. All sampling personnel must be knowledgeable of groundwater sampling procedures and the established protocols. Adequate preparations for sampling trips will be made by responsible personnel to ensure that sampling will be performed as efficiently and cost effectively as possible. Proper sampling protocol will be followed to ensure that representative samples of groundwater are provided for analysis, and that the act of sampling and the specific equipment utilized to collect each specific sample.

It is recommended that a monitoring well not be sampled for at least 2 weeks after well development has been completed.

Procedures specified in the site-specific health and safety and sampling and analysis plans also must be reviewed to determine if more stringent procedures are required at a specific site.

4.2.1 Pre-Sampling Trip Preparation

The site team leader and the environmental technician or staff hydrogeologist performing the sampling are responsible for review of available information and preparation of equipment to ensure that the sampling trip is performed as efficiently as possible. Thorough preparation will reduce lost time during sampling episodes, and will ensure that the sampler has the proper equipment available on site to follow established protocols. The following pre-sampling activities are recommended.

During an appropriate time frame prior to the scheduled sampling date, a vehicle and all necessary equipment will be signed out and checked by the sampling personnel. The sampling equipment will be inspected to confirm proper calibration and good repair. Equipment failing to operate within manufacturer's recommended specifications, must be properly repaired, adjusted, and calibrated prior to utilization. Documentation of equipment maintenance must be recorded in the field log book and the specific equipment log. Expendable field supplies will be checked

to determine whether adequate quantities of all supplies are available. Monitoring well construction logs and available water level data for all wells to be sampled should be reviewed to evaluate the conditions that will be encountered and the approximate volume of water to be evacuated.

Sample bottles must be ordered from the laboratory at least 2 to 3 days prior to the sampling date. When ordering sampling bottles, bottles for blanks and duplicates must be obtained, and the type of blanks to be obtained must be specified. Reagent grade water for equipment blanks must be provided by the laboratory or an appropriate vendor (e.g., Fisher Scientific).

The order of well sampling will be determined, such that the least contaminated wells at the site will be sampled first, progressing to the most contaminated wells last. Sample bottles obtained from the laboratory must be checked to ensure that all necessary sample bottles and associated preservatives have been provided.

On the day of sampling, on-site weather conditions will be evaluated to determine whether they are suitable for sample collection. Groundwater samples must not be collected in weather conditions that may affect the integrity of the samples (i.e., rain or high winds). Upon arrival at the site, the location and access to wells will be verified. Wells will be inspected to determine the condition of the surface casings, surface seals, well identification, and condition of the casing. The general condition of the wells and any abnormalities noted must be recorded in the field log book and the Field Data Information Log for Groundwater Sampling (Attachment 4-1).

4.2.2 Initial Activities

Prior to working at a particular well, plastic sheeting will be laid on the ground surface immediately surrounding the monitoring well.

It is recommended that immediately after opening the cap of the well, an OVA reading be collected at the well head. This may provide preliminary information on water quality and health and safety conditions.

The fluid levels will be measured in the well using the electric tape method. The presence of NAPLs should be reported to the project manager immediately, and may dictate the sampling method to be utilized.

The total depth of each well will be measured before sampling to ensure that silt or sand has not entered the well, which would indicate that the well screen has been damaged. The measurement will be used in the calculation of the volume of water standing in the well casing. The depth will be measured utilizing either an electric water level indicator, or, if contamination is known or suspected, a weighted, disposable line. A correction will be applied, as necessary, when using the electrical tape to account for the added length of the sensor located at the end of the tape.

4.2.3 Well Evacuation

All monitoring wells will be purged before collecting samples in order to remove stagnant water from the well casing and to assure that the groundwater sample submitted for laboratory analyses is representative of groundwater quality in the aquifer. During the purging process, the field parameters (pH, specific conductivity, dissolved oxygen, temperature, redox potential [Eh], and turbidity) will be measured at least once every well volume. To determine the volume of water standing in the well, the following formula may be used:

$$V = 0.041\ d^2h$$

Where: h = water column height (feet; well depth minus depth to water level)

d = diameter of well (inches)

V = volume of water standing in the well (gallons)

Well purging will continue until the following criteria have been met:

- A minimum of three to five well volumes have been evacuated from the well.
- Three consecutive measurements in which the field parameters have stabilized. Stabilization occurs when the pH measurements remain constant with 0.1 units, specific conductivity, redox potential, and dissolved oxygen vary by no more than 10 percent, and the temperature is constant. Utilizing low-flow purging and sampling techniques may require removal of a greater volume of water than three to five volumes.
- The turbidity is less than 5 NTUs.

All pertinent conditions of the sampling and the basis for field decisions should be documented in the Field Log Book and/or the Field Data Information Log for Groundwater Sampling.

It is strongly recommended that purging and sampling be conducted using low flow techniques, with an appropriate pumping mechanism, such as a Grundfos Redi-Flo2™ submersible pump. This method has been shown to cause a non-turbulent flow into the monitoring well screen (at a velocity closer to the "natural" flow). Hence, a relatively non-turbid sample, which is representative of the groundwater quality near the well, can be sampled. Purging may also be accomplished with a Teflon, PVC, or stainless steel bailer. It should be noted that bailing induces turbulent flow into the well, and hence tends to produce turbid samples with suspended particulate or colloidal matter which could lead to sampling artifacts (Barcelona and others, 1994). If groundwater is shallow enough (less than 30 feet bls) a peristaltic pump can be used for the purging and sampling of the well. The usage of a peristaltic is advantageous due to reducing equipment that needs to be decontaminated and likelihood of cross contamination between wells.

In preparation for groundwater sampling, an approximately 12-foot by 12-foot section of unused plastic sheeting will be secured on the ground surface surrounding the well. After measuring the pre-purging water level and total depth of the well, all of the pertinent equipment will be arranged and the pump and associated Teflon tubing will be inserted into the well. The pump intake will be installed to a depth in the central part of the screened interval of the well. After the pump assembly is secured, a water level probe will be lowered into the well to monitor the water level during the purging process.

The pump shall be turned on and the minimum flow rate possible shall be immediately attained. The objective is to have a flow rate low enough so that non-turbulent, rather than turbulent, flow is induced. Ideally, the flow rate should be close to the natural flow rate of groundwater moving through the well.

The field parameters noted above, as well as the water level in the well, will be measured and recorded immediately upon the commencement of purging and at least once every well volume thereafter. Attempts shall be made to limit the drawdown in the well to less than 0.25 feet. Drawdowns greater than this may indicate turbulent flow into the well.

In general, purging shall continue until the criteria listed above are met. Immediately after the groundwater sample and associated QA/QC samples have been collected, the field parameters will be measured and collected a final time. If the well exhibits a low yield, the flow rate will be reduced as much as possible to prevent the well from pumping dry. However, if the well does go dry, the well may be sampled following sufficient recovery, without the need for purging the minimum of three to five well volumes and documenting the stabilization of the field parameters. However, the field parameters should be measured and recorded as the measurements of record for the sampling event.

The low flow purging and sampling can be accomplished by pneumatic, peristaltic, or submersible pumps. A check valve will be installed along the intake purge line to minimize backwash of water. To minimize the possibility of contamination, all pumps and lines placed into the water will be manufactured of either Teflon or cleaned stainless steel.

If it is necessary to purge and sample the well with the bailer method, then Teflon or stainless steel bailers will be used. All bailers will be raised and lowered into the well using new nylon line, which will be disposed of between wells. The evacuation point should be just below the water surface when the screen is set near the bottom of the well.

All sampling personnel will wear a clean pair of new, disposable, latex or vinyl gloves while purging. After sampling, the hoses or bailers that come in contact with the groundwater will be decontaminated. The evacuated water will be discharged away from the well or will be containerized and properly disposed of if site conditions warrant this method of handling.

All field parameters and water level measurement will be recorded on the Field Data Information Log for Groundwater Sampling. Other information to be included on this log includes the

following: a summary of the construction and apparent integrity of the monitoring well, calculation of the height of the standing water in the well, and any pertinent field observations.

4.2.4 Sample Collection

After stabilization of the required field parameters or as soon as sufficient recharge has occurred, the samples will be collected using the same system as that used for well purging. Sampling personnel will wear a clean pair of new, non-powdered, disposable latex gloves at each different sampling location. These gloves will be donned immediately prior to sampling and will never come in contact with the media being sampled.

Samples will be collected in the following order (as applicable):

- Volatile organic compounds (VOCs)
- Dissolved gases and total organic carbon (TOC)
- Purgeable organic compounds
- Purgeable organic halogens (POX)
- Total organic halogens (TOX)
- Extractable (semi-volatile) organic compounds (SVOCs)
- Total metals
- Dissolved metals
- Phenols
- Cyanide
- Sulfate and chloride
- Turbidity
- Nitrate and ammonia
- Radionuclides

4.2.5 Labeling and Handling Requirements

After each sample is collected, samples will be labeled and handled in accordance with procedures specified in BSOP No. 4.

4.2.6 Collection of Quality Control Samples

All Quality Assurance/Quality Control (QA/QC) sampling activities must comply with the requirements of the following documents:

1. The Installation Quality Assurance Program Plan (QAPP).

2. Bhate's approved Comprehensive Quality Assurance Plan (CompQAP).

3. The Site-Specific Quality Assurance Project Plan (QAPP).

In the case where these documents do not concur as to the number and type of QC samples to collect in any given situation, the most conservative number and type of QC samples will be collected (the number which provides the greatest ratio of QC samples to environmental samples and the types of QC samples which allow for a thorough evaluation of sampling and analytical method). Several types of QC samples can be collected, including equipment (rinsate) blanks, field blanks, material blanks, duplicates, matrix spike and matrix spike duplicates, and trip blanks.

Equipment blanks are taken in the field by pouring reagent grade water provided by the laboratory through the pump or other sampling device prior to sampling. The blank is immediately poured into the sample bottles, which are preserved as ordinary groundwater samples

Field blanks will be collected wherever ambient sources of contamination, such as heavy industrial traffic and chemical storage in tanks or holding ponds, exist. Such conditions may affect the quality of the samples collected.

Duplicate samples are collected to evaluate the accuracy and precision of the contract laboratory. Duplicate samples will be collected at the same time as the associated environmental samples.

All of the sample bottles for a particular analysis for both the duplicate and the environmental samples will be filled before filling the sample bottles for the next analysis.

Appropriate sample containers filled with analyte-free water will be sealed and provided by the laboratory. Trip blanks will accompany all sample shipments containing VOC samples. These samples will be kept in the storage and shipping containers during all stages of the sampling efforts.

4.2.7 Field Equipment Cleaning Procedure

Sampling and monitoring equipment, including electrical water level tapes, bailers, and pumps, will be decontaminated upon arrival on site and between each well. Field Decontamination procedures will be the same as the equipment decontamination procedures specified in BSOP No. 13. Sampling personnel should always sample the least contaminated wells first (if known),

as an additional precaution against introducing contaminants into the wells and samples. If decontamination is performed in the field, all rinse water must be contained in a manner that prevents the introduction of contamination to surface water, boreholes, and adjacent areas. All rinsate should be collected in a compatible container and properly disposed of to prevent contamination of adjacent areas.

4.2.8 Field Documentation Procedure

A bound field log book must be maintained by sampling personnel to provide a daily record of sampling and events. The following information must be recorded into the log book using indelible, waterproof ink:

- Date
- Time
- Weather conditions
- Personnel present
- Signature of personnel making entry
- Well ID
- Total depth of well (if measured)
- Depth to water, measurement technique
- Well yield
- Purge volume and method
- Sample volume and method
- Sample withdrawal procedures
- Date and time of collection
- Well sampling sequence
- Field analyses performed
- Analyses requested
- Quality control activities

- Calibration procedures and results
- Problems encountered and corrective actions taken
- Sample distribution and transporter
- Field observations (e.g., unusual conditions, equipment malfunctions, and condition of monitoring well)

Pertinent data may be recorded on the Field Data Information Log for Groundwater Sampling for that specific sampling location. If the groundwater sampling log or its equivalent is used to record sampling data, then the field log book must be annotated by the personnel utilizing the form(s) such that the sample collection activities will be traceable through field records to the personnel sampling and the specific equipment utilized.

Additional documentation procedures are in BSOP No. 3. Shipping and handling of all samples will be accordance with the procedures specified in BSOP No. 4.

5 HYDRAULIC TESTING

5.1 Single-Well Aquifer (Pumping) Testing

5.1.1 Objective

The objective of this section is to provide procedures by which single-well aquifer (slug) tests are to be designed, conducted, and analyzed.

5.1.2 Procedure

5.1.2.1 Slug Test Design

Slug tests are utilized to obtain order-of-magnitude approximations of hydraulic conductivity in the portion of the aquifer immediately surrounding the well screens. Testing programs should be designed with consideration for potential aquifer heterogeneity, well construction variability, and ultimate use of results. Depending on a general understanding of the relative hydraulic conductivity of the aquifer to be tested (and thus the anticipated speed of the response to slug entry or removal), the depth to the water table, the types of contaminants, and well construction details, decisions can be made regarding slug test materials and data collection methodology. No water or other liquid shall be introduced into wells.

The time required for a slug test to be completed is a function of the volume of the slug, the transmissivity of the formation, and the well casing size. The slug volume should be large enough that a sufficient number of water level measurements can be made before the water level returns to equilibrium conditions. The length of the test may range from less than a minute to several hours.

Preparations for testing will include:

Office

- Review associated BSOP documents and information on the wells to be tested (depth to water, depth of well, screened interval, casing size).
- Coordinate schedules with sampling and other efforts.
- Review the operator manual provided with the electronic data logger, if appropriate.
- Check out and ensure the proper operation of all field equipment. Ensure that the electronics data logger is fully charged, if applicable. Test the electronic data logger and pressure transducers using a container of water (e.g., sink, bucket of water).

- Obtain appropriate sampling log book, and assemble a sufficient number of field form to complete the field assignment.

- Review appropriate sections of the Site Safety Plan.

Field

- Locate monitoring wells to be tested and appropriate decontamination areas.

- Assemble appropriate testing equipment.

- Decontaminate the transducers and cable as specified in BSOP No. 13.

- Collect initial water level measurement on the monitor well and record in the field log book.

- Before beginning the slug test, enter and record information in the electronic data logger. The type of information will vary depending on the model used. When using different models, consult the operator's manual for the proper data entry sequence to be used.

5.1.2.2 Slug Test Execution

The following general procedures will be used to collect and report slug test data. The procedures required for a particular slug test may vary slightly from those described, depending on site conditions. Modifications to the procedures shall be documented in the field log book.

A. When the slug test is performed using an electronic data logger and pressure transducer, most of the data will be electronically stored internally or on computer diskettes or tape. The information will be transferred directly to a computer and analyzed. A copy of field notes with supplemental information and a computer printout of the data shall be maintained in the files as documentation.

B. The field log book is used to record observations and supplemental information. At a minimum the following information shall be recorded for each test:

   - Site location: Brief description of the general location of the well.

   - Well or piezometer ID: Unique number assigned to each well or piezometer where measurements are taken.

   - Date of the test

   - Slug dimensions: Dimensions of the slug or displacement object in tenths of feet.

   - Personnel: Initials of personnel performing field measurements or collecting samples.

- Test type: The slug device is either inserted (falling head) or withdrawn (rising head) from the monitor well. Note the appropriate test type.

- Comments: Include appropriate observations or information concerning antecedent weather conditions, sequence of events, or work being conducted at the site.

- Elapsed time (min:sec): Cumulative time readings from beginning of test to end of test in minutes and seconds.

- Representative depth to water measurements: Depth to water levels should be recorded to hundredths of feet below the measuring point. Initial and final depth to water shall be measured using an electric tape. Test data may be recorded using a pressure transducer and electronic data logger.

C. Procedures for conducting a slug test.

1. Measure the pre-test water level in the well and record in the field log book and on the data sheet. The pint and time of measurement shall be noted in the field log book.
2. Cover sharp edges of the well casing with duct tape to protect the transducer cables.
3. Connect the transducer cable to the electronic data logger.
4. Slowly lower the transducer and cable down the well to a depth below the slug submergence for the test, but at least 6 inches from the bottom of the well. Be sure this depth of submergence is within the design range stamped on the transducer. Securely tape the transducer cable to a stationary object to keep the transducer at a constant depth.
5. Display the initial water level on the recording device according to manufacturer's instructions. Record the initial water level on the test data sheet.
6. Flag the slug/rope assembly so that easy identification can be made of how much rope must be left out to fully immerse the slug beneath the static water level, and how much rope to pull back to suspend the slug above the static water level.
7. Immediately after commencement of recording of data on the data logger, "instantaneously" introduce the slug and the rope to minimize slug movement. While results obtained from analysis of these "falling head" data may not be theoretically valid, continue to record and monitor head recovery until water returns to static levels. (Falling head tests are only valid for wells with the static water level above the top of the screen. Rising head tests will be utilized for wells that are screened across the water table. From a practical standpoint, data should be recorded until the displacement head has been reduced to 10 percent or less of maximum displacement, and monitoring should be continued until only 1 to 2 percent displacement remains.
8. If the head data are recorded manually, equate the moment of maximum head change to time zero, and measure and record the depth to water and the time at each reading. Depths should be measured to the nearest 0.01 foot. The number of depth-time measurements necessary to complete the test is variable. Measurements should be frequent enough so that the change in water level between two successive measurements is less than 5 percent of the initial change in water level. It is critical to make as many measurements as possible in the early part of the test.

9. After effective static water level has been reached, a second slug test may be performed on the well by instantaneously removing the slug from the water column. This type of slug test is referred to as a rising head slug test. If such a test is to be conducted, the slug should be withdrawn to the predetermined suspension level and the rope tied off to minimize slug interference with the transducer cable (if applicable), or the slug should be fully withdrawn to permit access for water level measurement.
10. Continue measuring and recording depth-time measurements until the water level return to within 10 percent of equilibrium conditions.

If the well is used as a monitoring well, precautions should be taken to prohibit contamination of the wells by material introduced into the well. Bailers, slug/rope assemblies, and measuring devices should be cleaned thoroughly before each test in accordance with BSOP No. 13. If tests are performed on more than one monitor well, care must betaken to avoid cross-contamination of the wells.

Slug tests must be conducted on relatively undisturbed wells. If a test is conducted on a well that has recently been pumped for water sampling purposes, the measured water level should be within 0.1 foot of the water level before sampling. At least 1 week should elapse between the drilling and development of a well and the performance of a slug test.

5.1.2.3 Post Operation

Field

- Decontaminate equipment and dispose of rope according to BSOP No. 13.
- If using an electronic data logger:
  1. Stop logging sequence.
  2. Save memory.

Office

- Inventory sampling equipment and supplies. Repair or replace all broken or damaged equipment.
- Replace expendable items.
- Return equipment to storage area, and report incidents of malfunctions or damage.
- Review field log book for completeness.
- Deliver original forms, logger data, and log books to supervising personnel with copies to file.

- Interpret slug test results. Analyze slug test using appropriate software packages or graphical solutions.

- Send data logger or pressure transducers to factory for recalibration, if needed.

5.2 Multiple-Well Aquifer (Pumping) Testing

5.2.1 Objective

This section presents general guidelines for performing multiple well aquifer pumping tests.

5.2.2 Procedure

5.2.2.1 Pumping Test Design

An aquifer test is a controlled field experiment designed to evaluate the performance characteristics of a well and the hydraulic properties of the associated aquifer(s). Such tests provide the best method for characterizing aquifer hydraulic properties when properly designed, performed, and conducted. They provide estimates for both transmissivity (T) and storage coefficient (S) over a large and representative volume of aquifer. Optimal performance of aquifer tests requires clear definition of three sets of requirements:

1. An understanding of the hydrogeological system being tested (i.e., confined or unconfined conditions and areal extent of aquifer).

2. The operational goals of the test (i.e., what information is needed from the test).

3. Identification of an analytical method that describes the aquifer conditions and can be used to reduce the data.

Aquifer tests are multifaceted, interdisciplinary efforts requiring coordination between technical personnel. Whereas, the more complex test are more difficult logistically and often more expensive, they generally yield much more information. Some essential hydrologic information, such as rates of leakage through confining layers can be obtained only by performing the more sophisticated aquifer tests.

Control Procedures of Aquifer Test Programs

The technical complexity of aquifer testing combined with the institutional concerns such as storage of contaminated water, requires procedures for general control of aquifer test programs. A 7-step control procedure is defined below. Detailed planning for, and supervision of, site-specific aquifer pumping tests must be conducted by an experienced hydrogeologist or groundwater hydrologist assigned to the project. The procedure presented here is primarily intended for project or task managers who require an aquifer test to be performed as part of a multi-discipline project.

1. Define test program requirements:
   a. Describe the hydrogeologic system to be tested (e.g., porous, heterogeneous aquifer).
   b. Define the operational goals and requirements for the test (e.g., transmissivity, confined or unconfined nature of aquifer, and/or leakage coefficients of aquitards).
   c. Identify a method by which the data may be interpreted, according to the known hydrogeologic conditions and operational requirements.
2. Evaluate operational constraints.
3. Design the test methods and develop an aquifer test plan.
4. Conduct pre-test activities.
5. Initiate test and collect data.
6. Interpret the data with the chosen model or appropriate analytical method.
7. Evaluate the need for further testing.

The following sections detail the information required for each step in the procedure.

Defining Test Program Requirements

Describe the Hydrogeologic System to be Tested: An aquifer test is interpreted by comparing field results with those expected from mathematical models. Therefore, the hydrogeology of the system to be tested should be defined as well as possible. Important factors include the following:

- Aquifer lithology and hydraulic characteristics (volume and nature of interstitial pores)
- Groundwater occurrence (confined, unconfined)
- Aquifer thickness, extent, and uniformity
- Boundary conditions (nearby streams, ponds, no-flow boundaries)
- Aquifer isotropy and homogeneity
- Well screen placement
- Anticipated flow rates and type of flow (transient, steady state)
- Potential for leakage form confining units

- Well characteristics (available drawdown, screen transmitting capacity, well efficiency)

Define Operational Goals of the Test: The information that is desired at the completion of the test should be well defined. Generally, the greater the accuracy and amount of information desired, the greater the complexity of the test. For example, the hydraulic conductivity of a test zone can be estimated on a local basis from a brief, inexpensive slug test (as described in Section 5.1.2), but the evaluation of leakage from confining units requires more complex aquifer pump testing. Common test goals include:

- Estimating aquifer yield for water supply needs
- Defining aquifer characteristics for groundwater assessment (usually driven by RCRA, CERCLA or other regulatory program)
- Defining aquifer characteristics for the siting of future waste disposal facilities
- Defining aquifer hydraulic characteristics for remedial action (extraction wells, hydraulic control, etc.)

Aquifer testing data needed for developing water supplies range from a single well performance test to a detailed aquifer characterization where a field of multiple wells is required. Where corrective or remedial actions are required, more detailed information is generally required. More complex aquifer tests are usually required to define this information. A relatively detailed conceptual model of the hydrogeologic system is needed to develop the optimal pumping strategy. The objectives of each project, the funding available, and other institutional concerns must be evaluated to develop the best aquifer testing approach.

Various types of aquifer test programs may be developed. The data generated vary according to the type of program. Some of the parameters which may be defined by an aquifer testing program are:

- Transmissivity (T)
- Storage coefficient/specific yield (S/Sy)
- Hydraulic conductivity (K)
- Vertical hydraulic conductivity of confining units (K_v)
- Groundwater yield from confining units
- Hydraulic resistance of confining units
- Specific capacity of a well

- Well losses and efficiency

The parameters defined during the aquifer test program must be selected based upon the objectives of the project, and the test methodology must be designed to yield the desired parameters. The desired areal extent of the test must also be considered when selecting the test method, discharge rate, and test duration.

Identify Testing and Data Reduction Methodology: Based on the criteria identified in the preceding two subsections, a method that fulfills the operational goals and adequately represents the hydrogeologic system must be identified. A large number of tests are available; may are summarized in Driscoll (1986) and Kruseman and DeRidder (1994).

Evaluate Operational Constraints

Once the technical basis of a program is established by the procedure described in the previous section, the plan must be expanded to address other site specific requirements, such as shutdown of water supply wells based on geologic and hydrologic conditions present at the site and 24-hour limited access to the site. In addition, environmental compliance requirements (notably requirements for discharge and disposal of any contaminated fluids) must be identified and fulfilled.

Define the Test Method and Testing Plan

An aquifer test plan should be prepared prior to testing. The plan should define all site-specific concerns such as site accessibility, water disposal, and 24-hour per day working conditions. The plan should also address specific technical concerns. Based upon the site hydrogeology, the chosen analytical method should be used to simulate the range of conditions expected to occur. This simulation should be used to determine observation well locations and screen settings, the length of time to run the test, and the effects of boundary conditions.

Conduct Pre-Test Activities

Prior to conducting the test, all activities scheduled for completion prior to test startup should be performed. These activities may include installation of additional observation wells, further defining the fluids management program, installation of pumping and monitoring devices such as flow meters and pressure transducers, and performing a sort term preliminary aquifer test. Specific pre-test activities for some pumping tests are defined in the following paragraphs. Pre-test activities may define needed modifications to the aquifer test plan.

Initiate Test and Collect Data

After completion of all previous procedures and pre-test activities, the aquifer test should be conducted according to the aquifer test plan (with modifications). Procedures for the most common tests are presented below.

Interpret Data with Chosen or Appropriate Analytical Method

After data are collected, they should be analyzed and interpreted with an appropriate analytical method or model. General data interpretation methods for curve-matching techniques are discussed below.

Evaluate the Need for Additional Testing

After data are compiled and interpreted, they should be evaluated to determine if additional testing is warranted. Events indicating the need for additional testing include evidence of interference from nearby pumping or special boundary conditions.

5.2.2.2 Test Site Selection

Selecting an appropriate test site will prevent difficulties often encountered during test data evaluation. In some cases, existing wells may be used or the hydrologic factors of a specific location may be of concern, thus predetermining the test site. However, the test site is usually dictated by the project needs and the test must be designed to accommodate site logistics.

Well field design and construction is dependent on the hydrogeology of the area and the hydrogeologic units of concern. Factors such as aquifer type, transmissivity and stratification should be taken into consideration by an experienced hydrogeologist when determining screen interval, number of wells, and well locations. Piezometers may be constructed in adjacent hydrogeologic units to determine any hydrologic connection these units have with the aquifer of concern.

5.2.2.3 General Testing Procedures

Water Level Measurements

The preferred method of collection aquifer test data is by the use of pressure transducers to ensure fast, accurate (at least to 1/100 of a foot), time-drawdown measurements. Other methods, as described in the references listed in Section 6, may be used to collect water level measurements when conducting multiple well, constant discharge tests. The same device should be used for measuring water levels in a particular well throughout the duration of a test. A reference point from which all water level measurements are made should be designated on the casing of each well. The reference point should be surveyed for vertical and horizontal location, in accordance with BSOP No. 11. The exact time all water level measurements are taken should be recorded on a military 24-hour time scale.

Decontamination

Any equipment used in production or monitoring wells must be thoroughly cleaned prior to use. Cleaning procedures are based upon site-specific conditions and the needs of the project. The actual cleaning procedure should be determined by the project manager and defined in the

aquifer test data. Cleaning may consist of little or no cleaning (if the well is to be used on for aquifer testing), disinfection (if the well is a water supply well), steam cleaning, or more rigorous cleaning procedures, as described in BSOP No. 13.

5.2.2.4 Aquifer Pre-Test

Background

An aquifer pre-test will be conducted prior to conducting multiple well constant rate aquifer tests. The purpose of this test is to collect all available background information of the hydrogeologic system in question, ensure that all equipment is in good working order, and confirm that all pumping settings and water level measuring devices are prepared for the start of the actual test. This pre-test should be conducted far enough in advance of the start of the actual test to allow the water levels to recover and stabilize, and to collect sufficient pre-test trend data.

Often, the pre-test is a step drawdown test. This is done to observe aquifer responses at various flow rates. The following are five questions of concern that should be answered at the completion of the pretest are:

1. What is the maximum anticipated drawdown at various discharge rates?

2. What discharge rates occur in various pump speeds or valve settings?

3. What is the best method to measure yield?

4. Is the discharge pipe far enough from the radius of influence to avoid recharging the aquifers of concern?

5. Are the observation wells yielding usable drawdown data a various discharge rates?

The pre-test is also used to test equipment, and to finalize valve settings so that the discharge rates are established at the beginning of the constant rate aquifer test.

Field Method for Aquifer Pre-Test

1. Prepare test setup for duration of test.

2. Decontaminate all equipment to be inserted into the well, if required.

3. Measure and record the pre-test water levels and the exact time of each reading.

4. Setup pump and discharge lines. The pump or intake must be set below the anticipated drawdown and within the pump lifting capacity. Discharge must be directed outside of the radius of influence of the cone of depression. If pumping from contaminated area, all water must be discharged in a manner compliant with applicable or relevant and appropriate regulatory requirements.

5. Determine the best method to measure yield. Orifice weirs and totalizing flow meters are the most common methods. Specifications for constructing orifice weirs are presented in Driscoll (1986). All discharge measuring devices should be manually checked for accuracy, if possible, by filling a container of known volume and recording the time required to fill it.

6. Initiate pumping, record time, and immediately monitor water levels in the pumping well. For all aquifer tests involving pumping, it is important that the water level in the pumping well be monitored before, during, and after pumping. Water levels and the time of each measurement since pumping began should be recorded. Discharge rates should be monitored every 5 minutes. Monitor wells nearest the pumping well should be monitored early in the test to see when a response to pumping is observed. As the radius of influence expands, more distant monitoring wells should be monitored.

7. Semilog and arithmetic data plots of drawdown versus time should be developed in the field based on test results.

8. After water levels begin to stabilize, the discharge rate should be increased to approximately 25 percent of the maximum possible anticipated discharge.

9. Continue monitoring water levels and discharge rates in the systematic manner established at the beginning of the test.

10. Conduct the test at several pumping rates. Each pumping rate should be run until water levels stabilize. The final rate should be approximately equal to the maximum possible discharge rate at which total available drawdown is attained.

11. At the completion of the test, all pump valves should be at the settings desired for the actual test.

5.2.2.5 Step Drawdown Tests

Background

Step drawdown tests are used to evaluate the effects of pumping in a well at various discharge rates. Information gained from step drawdown tests include:

- Values of specific capacity at various discharge rates
- Optimum discharge rates for pumping well
- The amount of well loss attributable to laminar and turbulent flow components, respectively
- The effect of various discharge rates on turbulent flow

- Aquifer parameters such as transmissivity (T), hydraulic conductivity (K), and storage coefficient (S; if data is obtained from observation well); and projected future pumping costs

A properly conducted test will include steps of equal length and constant discharge.

Field Method for Step Drawdown Tests

1. Obtain water level data and the barometric pressure at the time of the reading for a minimum of 1 week prior to the start of the test.

2. Make sure that the outlet of the discharge is located far enough from the well to avoid recharging the aquifer being tested.

3. Conduct an aquifer pre-test as described above. At least four to five possible discharge rates in increasing order should be determined during the pre-test.

4. After allowing sufficient time for water levels to recover to pre-test levels, the test may be conducted.

5. Measure static water level and record the date and time of reading.

6. Measure the barometric pressure every 1/2 hour.

7. Insert transducers at a depth below the maximum anticipated drawdown and at least 1 foot above the bottom of the well.

8. Initiate pumping at the lowest discharge rate to be used. At the exact moment pumping begins, begin recording water levels in the pumping well and the exact time since pumping began. As many measurements as possible should be obtained during the first 5 minutes of the test. Water levels should then be obtained at increasing time intervals, beginning with 1 minute and increasing slowly to a maximum of 10 minutes. Intervals should never exceed the time required for water levels to change by 0.2 feet. Water levels should be measured in observation wells early enough to obtain initial drawdown data. Early drawdown data is especially critical in determining aquifer coefficients.

9. Measure and record discharge rates at the same frequency water level measurements are obtained. The entire test generally runs from 8 to 72 hours.

10. After running the initial step for 1 to 2 hours, and stabilization of water level, increase the discharge to the second desired rate. Measure the water levels and discharge rates at the same intervals as taken in the first step.

11. Continue the test through a minimum of two additional steps conducted in a manner similar to the first two.

12. Drawdown data should be plotted in the field to ensure stabilization of water levels during each step.

Data Analysis and Interpretation

The following information is required to analyze data and should be collected during the test:

1. Discharge rates of pumping well
2. A number of water level data during the course of the test (each record should specify water level and the exact time since pumping began)
3. Distance from pumping well to each observation well
4. Description and elevation of each measuring point
5. Total depth and screen interval of pumping and monitoring wells
6. Well materials and construction details of all wells
7. Barometric pressure at 30-minute intervals

Analysis of step drawdown pumping test shall be completed by an experienced hydrogeologist or groundwater hydrologist and reviewed by senior personnel. Drawdown data should be corrected for regional trends, barometric pressure, or any other influencing factors. Most common methods of analysis are described in Bear (1979), Bierschnenk (1964), and Rorabough (1953). However, appropriate methods of analysis are dependent on the type of aquifer being tested and well field construction and design.

5.2.2.6 Single and Multiple Well Constant Yield Tests

Background

Constant yield aquifer tests are conducted to estimate aquifer coefficients such as transmissivity and storativity (specific yield for unconfined aquifers), and hydraulic conductivity. Constant yield aquifer tests can also be used to predict:

1. The drawdowns in a well at future times and at varying discharge rates;
2. The effect of new withdrawals on existing wells;
3. The radius of the cone of influence for individual or multiple wells (multiple well tests);
4. The hydraulic characteristics of confining beds

5. The position and nature of aquifer boundaries; and

6. The degree of vertical and horizontal anisotropy.

A value for storage coefficient cannot be obtained from tests in which only the pumping well is monitored.

Field Method for Single or Multiple Well Constant Rate Tests

1. Obtain water level data for a minimum of 1 week prior to the start of the test.

2. Make sure that the outlet of the discharge is located far enough from well to avoid recharging of the aquifer being tested.

3. Conduct a pre-test as described above. A minimum of 2 days should be allowed for water to return to static conditions prior to starting the actual test.

4. Measure and record the static water level in all wells to be monitored and the exact time of each measurement.

5. Insert transducers below the depth of maximum anticipated drawdown and at least 1 foot from the bottom of the well.

6. Initiate pumping at a discharge rate determined during the pre-test. Record as many measurements as possible and the exact time since pumping began for each measurement during the first 5 minutes of the test. Measurements should then be obtained every 30 seconds to 10 minutes, then at increasing intervals beginning at 1 minute and increasing slowly to a maximum of 10 minutes, thereafter. Intervals should never exceed the time required for water levels to change by 0.2 feet.

7. Periodically record discharge rates throughout the test (every 5 minutes for the first hour and with each water level measurement thereafter).

8. Monitor barometric pressure every 15 minutes for the first 60 minutes of the test and every 30 minutes thereafter.

9. Measure and record any amounts of precipitation that occur during the test.

10. Develop Log-log and semilog plots of the test data in the field.

11. The test should last for at least 48 hours in an unconfined aquifer and 24 hours in a confined aquifer. Field data plots should be evaluated prior to termination of the test for variations in drawdown.

12. After pumping has ceased, the rate of the water level rise toward the static (pre-pumping) water level should be recorded, as described in Driscoll (1986, Chapter 9). This rate of

recovery provides a means for calculating the coefficient of transmissivity and storage, using information from the pumping well.

Data Analysis and Interpretation

The following information is required to analyze data and should be collected during the test:

1. Discharge rate of pumping well
2. Water level data during the course of the test (each record should specify water level, pumping or observation well ID, and the exact time since pumping began)
3. Distance from pumping well to each observation well
4. Description and elevation of each measuring point
5. Total depth and screen interval of pumping and observation wells
6. Well materials and construction details of all wells
7. Barometric pressure at 30-minute intervals

Analysis of aquifer pumping test shall be completed by an experienced hydrogeologist or groundwater hydrologist and reviewed by the Project or Task Manager. Drawdown data should be corrected for regional trends, barometric pressure, or any other influencing factors. Most common methods of analysis are described in Driscoll (1986), Lohman (1972), or Kruseman and DeRidder (1970). Several computerized solution techniques are also available. However, appropriate methods of analysis are dependent on the type of aquifer being tested and well field construction and design.

This page intentionally blank.

6 REFERENCES

Air Force Center for Environmental Excellence, *Handbook for the Installation Restoration Program, Remedial Investigations and Feasibility Studies,* September 1993.

Aller, L., et al, *Handbook of Suggested Practices for the Design and Installation of Ground-water Monitoring Wells,* EPA 600/4-89/034, 1989.

American Society of Testing and Materials (ASTM), *Standard Guide for Sampling Groundwater Monitoring Wells,* D 4448-85a, May 1986 (Reapproved 1992).

American Society of Testing and Materials (ASTM), *Standard Practice for Design and Installation of Groundwater Monitoring Well in Aquifers,* D 5092-90, October 1990 (Reapproved 1995).

American Society of Testing and Materials (ASTM), *Standard Practice for Development of Ground-water Monitoring Well in Aquifers,* D 5521-94, September 1994.

American Society of Testing and Materials (ASTM), *Standard Specification for Portland Cement,* C 150-00, 2000.

Barcelona, M.J., Wehrmann, H.A., and Varljen, M.D., *Reproducible Well-Purging Procedures and VOC Stabilization Criteria for Ground-water Sampling,* Ground Water, Vol. 32, No. 1, 1994.

Bear, J., *Hydraulics of Groundwater,* McGraw-Hill, pp. 477-479, 1979.

Bierschenk, W.H., *Determining Well Efficiency by Multiple Step-Drawdown Tests,* International Assoc. Sci. Hydrology, Pub 64, pp. 493-507, 1964.

Driscoll, F.G., *Groundwater and Wells,* Johnson U.O.P., Inc., pp. 550-552, 1986.

Fetter, C.W., Contaminant Hydrogeology, Prentice Hall, 1994.

Kruseman, G.P. and N.A. DeRidder, *Analysis and Evaluation of Pumping Test Data,* 3rd Edition, International Institute for Land Reclamation and Improvement, Wageningen, The Netherlands, 1994.

Lohman, S. W., *Groundwater Hydraulics,* U.S.G.S. Professional Paper No. 708, 1972.

NOAA, National Weather Service Observing Handbook No. 2, *Substation Observatories,* U.S. Department of Commerce, 1972.

Puls, R.W., Powell, R.M., *Acquisition of Representative Groundwater Quality Samples for Metals,* Ground Water Monitoring Review, Vol. 12, No. 3, 1992.

Rorabaugh, M.I., *Graphical and Theoretical Analysis of Step Drawdown Test of Artesian Well*, Proc. Am. Soc. Civil Engrs., w. 79, sep. 362, 23 pp, 1953.

U.S. Environmental Protection Agency, *RCRA Ground-Water Monitoring Draft Technical Guidance*, Office of Solid Waste, November 1992.

ATTACHMENT 1-1

MONITORING WELL INSTALLATION DETAIL FORM

BHATE
Environmental Engineers and Scientists

WELL CONSTRUCTION DIAGRAM (Flush Mount)

SITE: _____
PROJECT NAME: _____
PROJECT NO./PHASE: _____
DRILLING CONTRACTOR: _____
DRILLER: _____
GEOLOGIST: _____

WELL/BORING ID: _____
DRILLING METHOD: _____
DATE(S): _____
SURVEYOR: _____
NORTHING (NAD 83): _____
EASTING (NAD 83): _____

NOT TO SCALE

Surface Elevation (NAVD 88): _____

Casing Elevation (NAVD 88): _____

Borehole Diameter (in): _____
Well Casing Diameter (in): _____

DEPTH TO WATER
During Drilling: _____
Date _____
Pre Development: _____
Date _____
Post Development: _____
Date _____

Top of Secondary Filter Pack: _____

Top of Filter Pack: _____

Top of Screen: _____

Bottom of Screen: _____
Bottom of Well: _____
Bottom of Filter Pack: _____

Borehole Depth: _____

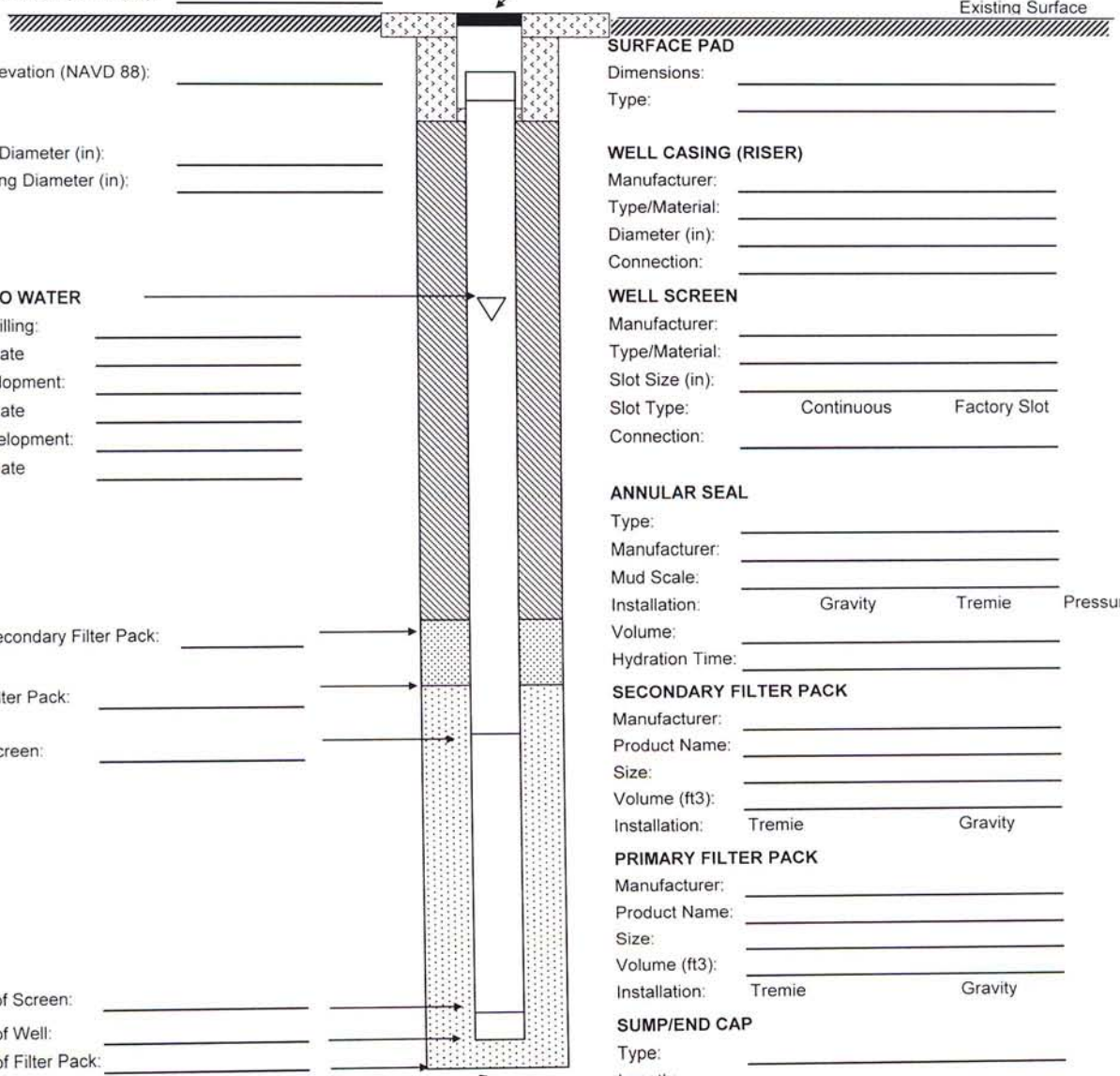

PROTECTIVE CASING
Type: _____
Dimensions: _____
Length: _____

SURFACE PAD
Dimensions: _____
Type: _____

WELL CASING (RISER)
Manufacturer: _____
Type/Material: _____
Diameter (in): _____
Connection: _____

WELL SCREEN
Manufacturer: _____
Type/Material: _____
Slot Size (in): _____
Slot Type: Continuous Factory Slot
Connection: _____

ANNULAR SEAL
Type: _____
Manufacturer: _____
Mud Scale: _____
Installation: Gravity Tremie Pressure
Volume: _____
Hydration Time: _____

SECONDARY FILTER PACK
Manufacturer: _____
Product Name: _____
Size: _____
Volume (ft3): _____
Installation: Tremie Gravity

PRIMARY FILTER PACK
Manufacturer: _____
Product Name: _____
Size: _____
Volume (ft3): _____
Installation: Tremie Gravity

SUMP/END CAP
Type: _____
Length: _____

BACKFILL MATERIAL
Type: _____
Volume:

Comments:

BHATE
Environmental Engineers and Scientists

WELL CONSTRUCTION DIAGRAM (Abovegrade)

SITE: _____
PROJECT NAME: _____
PROJECT NO./PHASE: _____
DRILLING CONTRACTOR: _____
DRILLER: _____
GEOLOGIST: _____

WELL/BORING ID: _____
DRILLING METHOD: _____
DATE(S): _____
SURVEYOR: _____
NORTHING (NAD 83): _____
EASTING (NAD 83): _____

NOT TO SCALE

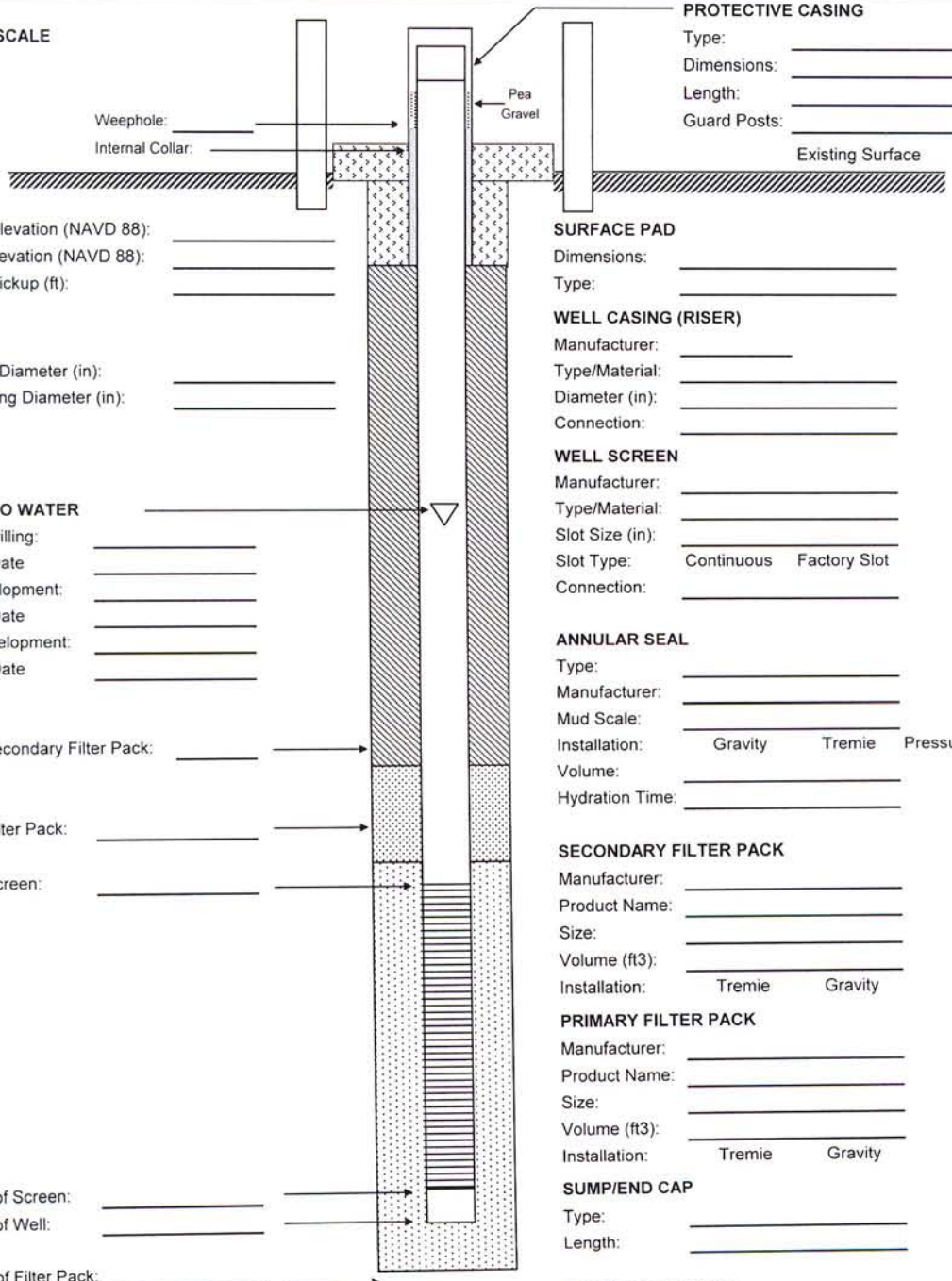

PROTECTIVE CASING
Type: _____
Dimensions: _____
Length: _____
Guard Posts: _____

Surface Elevation (NAVD 88): _____
Casing Elevation (NAVD 88): _____
Casing Stickup (ft): _____

Borehole Diameter (in): _____
Well Casing Diameter (in): _____

DEPTH TO WATER
During Drilling: _____
Date _____
Pre Development: _____
Date _____
Post Development: _____
Date _____

Top of Secondary Filter Pack: _____

Top of Filter Pack: _____

Top of Screen: _____

Bottom of Screen: _____
Bottom of Well: _____

Bottom of Filter Pack: _____

Borehole Depth: _____

SURFACE PAD
Dimensions: _____
Type: _____

WELL CASING (RISER)
Manufacturer: _____
Type/Material: _____
Diameter (in): _____
Connection: _____

WELL SCREEN
Manufacturer: _____
Type/Material: _____
Slot Size (in): _____
Slot Type: Continuous Factory Slot
Connection: _____

ANNULAR SEAL
Type: _____
Manufacturer: _____
Mud Scale: _____
Installation: Gravity Tremie Pressure
Volume: _____
Hydration Time: _____

SECONDARY FILTER PACK
Manufacturer: _____
Product Name: _____
Size: _____
Volume (ft3): _____
Installation: Tremie Gravity

PRIMARY FILTER PACK
Manufacturer: _____
Product Name: _____
Size: _____
Volume (ft3): _____
Installation: Tremie Gravity

SUMP/END CAP
Type: _____
Length: _____

BACKFILL MATERIAL
Type: _____
Volume: _____

Comments:

ATTACHMENT 1-2

CASING/WELL SCREEN TALLY FORM

BHATE
Environmental Engineers and Scientists

CASING TALLY

WELL NUMBER _____

ITEM NO.	DESCRIPTION	LENGTH (FEET)	SCREEN DIAGRAM
			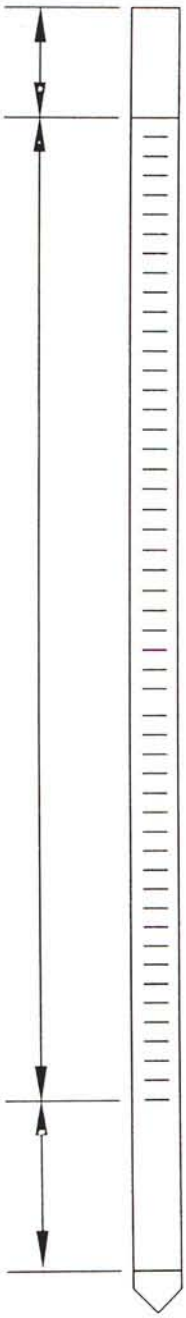

PROJECT NAME: _____ CLIENT: _____

PROJECT NUMBER/PHASE: _____ PROJECT LOCATION: _____

DRILLING MTHD: _____

DATE STARTED: _____ DATE FINISHED: _____ ENGINEER/GEOLOGIST: _____

ATTACHMENT 2-1

WATER LEVEL DATA SUMMARY FORM

BHATE
Environmental Engineers and Scientists

WATER LEVEL DATA SUMMARY

Project Name:	**Herington AAF – AOI 203**	**Date:**		**Page**		**of**	
Project Number:	**9020204**	**Site Name:**		**AOI 203**			
Field Personnel #1		**Field Personnel #2**					
Survey Datum (NGVD)		**Weather (previous 24 hours):**					
Measuring Device							

Well Number	Time (hhmm)	Measuring Point		Depth to Water (ft, TOC)	Elevation of Water (ft, NGVD)
		Description	Elevation (ft, NGVD)		

Notes: NGVD = National Geodetic Vertical Datum
TOC = Top of Well Casing

Comments/Observations:

BHATE
Environmental Engineers and Scientists

WATER LEVEL DATA SUMMARY (Contd.)

Project Name:	Herington AAF – AOI 203	Date:		Page		of	
Project Number:	9020204	Site Name:		AOI 203			

Well Number	Time (hhmm)	Measuring Point		Depth to Water (ft, TOC)	Elevation of Water (ft, NGVD)
		Description	Elevation (ft, NGVD)		

Notes: NGVD = National Geodetic Vertical Datum
TOC = Top of Well Casing

Comments/Observations:

ATTACHMENT 3-1

MONITORING WELL DEVELOPMENT LOG

MONITORING WELL DEVELOPMENT FORM

BHATE
Environmental Engineers and Scientist

Page _____ of _____

LOCATION	Site:	Location ID:	Date:
	Project Name:	Project No./Phase:	Recorded By:
EQUIPMENT	Pump Type/ID#:	Water Quality Meter/ID#:	PID Type/ID#:
	Water Level Indicator Type/ID#:	Other Equipment/ID#:	Decon Method:
	Tubing Type/Diameter (in):	Other Equipment/ID#:	PPE Level: D C B A
WELL INFO	(A) Initial Depth to Water (ft BTOC):	Casing: Type Diam. (in)	Weather:
	(B) Total Well Depth (ft BTOC):	(E) Casing Volume Multiplier (gal/lin ft):	Background PID (ppm):
	(C) Water Column Thickness (ft) (B-A):	Screen Length (lin ft):	Breathing Zone PID (ppm):
	(D) Well Volume (gal) (C x E):	Screen Info: Type: Size:	Well Opening PID (ppm):

CASING INFO	Riseer/Well Casing Inner Diameter (in)	0.50	1.00	1.50	2.00	3.00	4.00	5.0	6.0	8.0	10
	(D) Casing Volume Multiplier(gal/lin ft)	0.02	0.04	0.10	0.16	0.38	0.65	1.02	1.47	2.61	4.08

DATE (mmddyy)	TIME (24 Hr)	Water Level (BTOC)	Volume Removed (gal)	Pumping Rate (gpm)	Temp (C)	pH	Cond. (mS/cm)	Dissolved Oxygen (mg/l)	Turbidity (NTU)	Oxidation Reduction Potential (mV)	Remarks (odor, clarity, etc.)
DEVELOPMENT CRITERIA											
+/- 10% unless otherwise noted					+/- 0.5	+/- 0.1	+/- 25	+/- 0.2	< 50.0	+/- 20	

COMMENTS:

MONITORING WELL DEVELOPMENT FORM

LOCATION	Site: 0.00	Location ID:	Date:
	Project Name: 0.00	Project No./Phase: 0.00	Recorded By:

DATE (mmddyy)	TIME (24 Hr)	Water Level (BTOC)	Volume Removed (gal)	Pumping Rate (gpm)	Temp (C)	pH	Cond. (mS/cm)	Dissolved Oxygen (mg/l)	Turbidity (NTU)	Oxidation Reduction Potential (mV)	Remarks (odor, clarity, etc.)

ATTACHMENT 4-1

FIELD DATA INFORMATION LOG FOR GROUNDWATER SAMPLING

MONITORING WELL SAMPLE COLLECTION FORM

BHATE
Environmental Engineers and Scientist

Page 1 of

LOCATION	Site: AOI 203	Location ID:	Date:
	Project Name: Herington AAF	Project No./Phase: 90202040.00	Recorded By:
EQUIPMENT	Pump Type/ID#:	Water Quality Meter/ID#:	PID Type/ID#:
	Water Level Indicator Type/ID#:	Other Equipment/ID#:	Decon Method:
	Tubing Type/Diameter (in):	Other Equipment/ID#:	PPE Level: D C B A
WELL INFO	(A) Initial Depth to Water (ft BTOC):	Casing: Type Diam. (in)	Weather:
	(B) Total Well Depth (ft BTOC):	(E) Casing Volume Multiplier (gal/lin ft):	Background PID (ppm):
	(C) Water Column Thickness (ft) (B-A):	Screen Length (lin ft):	Breathing Zone PID (ppm):
	(D) Well Volume (gal) (C x E):	Screen Info: Type: Size:	Well Opening PID (ppm):

CASING INFO											
Riseer/Well Casing Inner Diameter (in)	0.50	1.00	1.50	2.00	3.00	4.00	5.0	6.0	8.0	10
(D) Casing Volume Multiplier(gal/lin ft)	0.02	0.04	0.10	0.16	0.38	0.65	1.02	1.47	2.61	4.08

DATE (mmddyy)	TIME (24 Hr)	Water Level (BTOC)	Volume Removed (gal)	Pumping Rate (gpm)	Temp (C)	pH	Cond. (mS/cm)	Dissolved Oxygen (mg/l)	Turbidity (NTU)	Oxidation Reduction Potential (mV)	Remarks (odor, clarity, etc.)

Colorimeter Results					No. Containers/Volume/Type			Preserv.	Filter (Y/N)	Method	Parameter(s)
Time	Analyte	Dilution	Result	Units	3	40 ml	VOAs	HCL	N	8260A	VOCs
					2	1 Liter	Glass Amber	-	N	8270C	SVOCs
					1	250 ml	Plastic	HNO3	N	6010B/7470A	TAL Metals
					2	1 Liter	Glass Amber	-	N	8081A	Pesticides
					3	1 Liter	Glass Amber	-	N	8330	Explosives
					3	40 ml	VOAs	HCL	N	RSK-175	Methane, Ethane, Ethene
Conversions	**Stabilization Criteria**				1	500 ml	Plastic	-	N	300.1	Chloride
1 L = 0.26 gals	Temp	+/- 0.5	DO	+/- 0.2	-	500 ml	Plastic	-	N	300.1	Sulfate
1 gal = 3.79 L	pH	+/- 0.1	Turb	+/- 10	1	500 ml	Plastic	NaOH	N	9030B	Sulfide
	Cond	+/- 25	ORP	+/- 10	1	250 ml	Plastic	-	N	300.1	Nitrate/Nitrite

BHATE
Environmental Engineers and Scientist

Page _____ of _____

LOCATION	Site: AOI 203	Location ID:	Date:

MONITORING WELL SAMPLE COLLECTION FORM

Project Name:	Herington AAF	Project No./Phase:	90202040.00	Recorded By:

DATE (mmddyy)	TIME (24 Hr)	Water Level (BTOC)	Volume Removed (gal)	Pumping Rate (gpm)	Temp (C)	pH	Cond. (mS/cm)	Dissolved Oxygen (mg/l)	Turbidity (NTU)	Oxidation Reduction Potential	Remarks (odor, clarity, etc.)

~~ATTACHMENT E~~

~~FIELD FORMS~~

APPENDIX A

HAFB BASEWIDE QAPP ADDENDUM

QUALITY ASSURANCE PROJECT PLAN ADDENDUM

SWMU 8

RCRA FACILITY INVESTIGATION

HOLLOMAN AIR FORCE BASE, NEW MEXICO

Prepared for:

49 CES/CEA
Holloman Air Force Base
New Mexico

Under Contract to:

U.S. Army Corps of Engineers
Albuquerque District
HTRW Branch
4101 Jefferson Plaza NE
Albuquerque, New Mexico 87109-3435
USACE Albuquerque District Project No. KWRD076044

Prepared by:

NationView, LLC
1608 13th Avenue South, Suite 160
Birmingham, Alabama 35205
NationView Project No. 8080014.03

Contract No. W912PL-07-D-0050
Delivery Order No. DM01

~~January 2009~~March 2010

This page intentionally left blank.

QUALITY ASSURANCE PROJECT PLAN ADDENDUM

SWMU 8
RCRA FACILITY INVESTIGATION
HOLLOMAN AFB, NEW MEXICO

REVIEW SHEET

COMMITMENT TO IMPLEMENT THIS QUALITY ASSURANCE PROJECT PLAN ADDENDUM		
David D. Martin	David D. Martin	3/23/10 ~~1/9/09~~
Corporate Sponsor	Signature	Date
Frank Gardner, P.G.	Frank Gardner	3/23/10 ~~1/9/09~~
Project Manager	Signature	Date
Jim Moore, P.G.	J H Moore	3/23/10 ~~1/9/09~~
Field Team Leader/Geologist	Signature	Date

This page intentionally left blank.

QUALITY ASSURANCE PROJECT PLAN ADDENDUM

SWMU 8

RCRA FACILITY INVESTIGATION

HOLLOMAN AFB, NEW MEXICO

TABLE OF CONTENTS

List of Acronyms.....iii

Preface v

1 Introduction 1-1

2 Project Laboratory 2-1

3 Data Categories 3-1

4 Data Quality Assurance and Quality Control 4-1

5 References 5-1

Tables

3-1 Summary of Screening Data

3-2 Summary of Definitive Data

4-1 Summary of Additional Characterization Field QC Samples

4-2 Summary of Laboratory QC Limits (Soil and Groundwater)

~~4-3 Summary of Laboratory QC Limits (Indoor Air)~~

~~4-4 Summary of Laboratory QC Limits (Soil-Vapor)~~

This page intentionally left blank.

LIST OF ACRONYMS

AFB	Air Force Base
AOC	Area of Concern
ASTM	American Society for Testing and Materials
Bhate	Bhate Environmental Associates, Inc.
CAS No.	Chemical Abstracts Services Number
DRO	Diesel Range Organics
EDD	Electronic data deliverable
~~ELAP~~	~~Environmental Laboratory Accreditation Program~~
GRO	Gasoline Range Organics
~~H&P~~	~~H&P Mobile Geochemistry~~
HAFB	Holloman Air Force Base
LCL	Lower Control Limit
LCS	Laboratory Control Sample
~~LELAP~~	~~Louisiana Environmental Laboratory Accreditation Program~~
MCL	Maximum Contaminant Level
µg/kg	Micrograms per kilogram
µg/L	Micrograms per liter
mg/kg	Milligrams per kilogram
mg/L	Milligrams per liter
MS	Matrix Spike
MSD	Matrix Spike Duplicate
NA	Not Applicable
~~NELAC~~NELAP	National Environmental Laboratory Accreditation ~~Conference~~Program
NMED	New Mexico Environment Department
NMWQCC	New Mexico Water Quality Control Commission
NV	No Value
ORO	Oil Range Organics
PCS	Petroleum contaminated soil
PG	Professional Geologist
QA	Quality Assurance
QAM	Quality Assurance Manual
QAPP	Quality Assurance Project Plan
QC	Quality Control
RCRA	Resource Conservation and Recovery Act
RFI	RCRA Facility Investigation
RL	Reporting Limit
RPD	Relative Percent Difference
SOPs	Standard Operating Procedures
SSLs	Soil Screening Levels
SVOC	Semi-volatile Organic Compounds
SWMU	Solid Waste Management Unit
TAL	Target Analyte List

LIST OF ACRONYMS

TDS	Total Dissolved Solids
TPH	Total Petroleum Hydrocarbons
UCL	Upper Control Limit
USACE	United States Army Corps of Engineers
USEPA	United States Environmental Protection Agency
VOC	Volatile Organic Compound

PREFACE

This Quality Assurance Project Plan Addendum (QAPP Addendum) has been developed to assure that sample collection, analyses, and evaluations are legally and scientifically defensible for the Resource Conservation and Recovery Act (RCRA) Facility Investigation (RFI) of Solid Waste Management Unit (SWMU) 8 at Holloman Air Force Base (HAFB), New Mexico. This document is an addendum to the *Basewide Quality Assurance Project Plan, Holloman Air Force Base, New Mexico* (Bhate Environmental Associates, Inc. [Bhate], November 2003) (Basewide QAPP) and must be used in conjunction with that document. This document contains the site specific information for the work at SWMU 8 outlined in the *Final RCRA Facility Investigation Work Plan, SWMU 8, Holloman Air Force Base, New Mexico* (NationView, ~~January 2009~~March 2010) (SWMU 8 RFI Work Plan).

This page intentionally left blank.

1 INTRODUCTION

NationView, LLC, has been retained by the U.S. Army Corps of Engineers (USACE), under contract W912PL-07-D-0050, Delivery Order No. DM01, to conduct Resource Conservation and Recovery Act (RCRA) Facility Investigations (RFIs) at several of the Solid Waste Management Units (SWMUs) and Areas of Concern (AOCs) at Holloman Air Force Base (HAFB), New Mexico.

The SWMU 8 RFI Work Plan involves an additional investigation of petroleum contaminated soil (PCS). The objective of the additional investigation is to fill in the data gaps to completely identify the extent of petroleum contamination in soil and groundwater greater than the New Mexico Environment Department (NMED) and/or United States Environmental Protection Agency (USEPA) action levels~~Soil Screening Levels (SSLs)~~. Once the extent of the petroleum contamination has been defined, the goal is to demonstrate through risk based methodology, that any remaining contaminants do not pose a threat to human health or the environment. The ~~sampling~~ media to be ~~conducted~~ sampled ~~includes~~ are soil~~,~~ and groundwater~~, soil-vapor, and indoor air sampling~~. See the Basewide QAPP (Bhate, November 2003) and SWMU 8 RFI Work Plan (NationView, ~~January 2009~~March 2010) for additional information on HAFB and the SWMU 8 site.

This page intentionally left blank.

2 PROJECT LABORATORY~~IES~~

The soil~~,~~ and groundwater~~, and indoor air~~ analytical work for this project will be preformed by Accutest Southeast of Orlando, Florida (Accutest).

Accutest Southeast
4405 Vineland Road, Suite C-15
Orlando, FL 32811
Phone: (407) 425-6700
Fax: (407) 425-0707

The laboratory personnel who will be involved with this project include:

Ms. Sue Bell, Accutest Project Manager

Ms. Svetlana Izosimova, Accutest Quality Assurance Officer

Accutest is certified by the National Environmental Laboratory Accreditation ~~Conference~~ Program (~~NELAC~~NELAP) and validated by the USACE and has extensive previous experience in working on USACE projects. The Accutest Quality Assurance Manual (QAM) and Standard Operating Procedures (SOPs) have been reviewed by NationView and found to meet all the requirements for this project. The QAM and SOPs are available for further review if required.

~~The soil-vapor analytical work for this project will be preformed by H&P Mobile Geochemistry in Carlsbad, California (H&P).~~

~~**H&P Mobile Geochemistry**~~
~~2470 Impala Drive~~
~~Carlsbad, CA 92010~~
~~Phone: (760) 804-9678~~
~~Fax: (760) 804-9159~~

~~The laboratory personnel who will be involved with this project include:~~

~~**Ms. Suzie Reed,** Project Manager~~

~~**Mr. Mark Burke,** Quality Assurance Officer~~

~~H&P is certified by the NELAC; State of California Environmental Laboratory Accreditation Program (ELAP); and State of Louisiana Environmental Laboratory Accreditation Program (LELAP). The firm provides services to most government agencies such as Navy, Air Force, and USACE, as well as ongoing research with the U.S. Environmental Protection Agency (USEPA) which is currently being conducted at the Lemoore and Vandenberg Air Force Base. The H&P QAM and SOPs have been reviewed by NationView and found to meet all the requirements of this project. The QAM and SOPs are available for further review if required.~~

This page intentionally left blank.

3 DATA CATEGORIES

The data use determines the required levels of data quality. The two levels of data quality established by the USACE are screening and definitive. Under this QAPP Addendum, the data to be generated under each level in this investigation are presented in Table 3-1 (Screening) and Table 3-2 (Definitive). The screening data will be generated in the field using field instruments. The definitive data generated by the laboratory will be presented with limited data deliverables (i.e. Level II data packages), using a standard turn-around-time for the soil~~, soil vapor, indoor air,~~ and groundwater samples collected during the investigation. All definitive data produced by the laboratory will also be presented in an electronic data deliverable (EDD) format.

This page intentionally left blank.

4 DATA QUALITY ASSURANCE AND QUALITY CONTROL

The general data quality assurance (QA) and quality control (QC) requirements for HAFB are presented in the Basewide QAPP. The field QC requirements for this project are presented in Table 4-1. The project specific laboratory QC limits are listed in Table~~s~~ 4-2~~ through 4-4~~.

All final definitive data will be reviewed and validated by a NationView Senior Chemist based on the logic and guidelines of the USEPA National Functional Guidelines for Data Validation and the site specific laboratory QC limits presented in this QAPP Addendum.

This page intentionally left blank.

5 REFERENCES

Bhate, November 2003. *Final Basewide Quality Assurance Project Plan, Holloman Air Force Base, New Mexico.*

NationView, ~~January 2009~~March 2010. *Final RCRA Facility Investigation Work Plan, SWMU 8, Holloman Air Force Base, New Mexico.*

New Mexico Administrative Code MAC 20.6.2, New Mexico Water Quality Control Commission Regulations, September 15, 2002 (http://nmenv.state.nm.us/NMED_Regs/gwb/20_6_2.NMAC.pdf).

NMED, October 2006. *New Mexico Environment Department TPH Screening Guidelines*.

~~New Mexico Environment Department (NMED), March 2000. *Underground Storage Tank Bureau Guidelines for Collective Action.*~~

NMED, ~~June 2006~~December 2009. *New Mexico Environmental Department Technical Background Document for Development of Soil Screening Levels, Revision 5.0*.

United States Environmental Protection Agency (USEPA), October 2004. *USEPA Contract Laboratory Program National Functional Guidelines for Inorganic Data Review.* Office of Emergency and Remedial Response, U.S. Environmental Protection Agency Washington DC.

~~United States Environmental Protection Agency (USEPA), 1995. *Drinking Water Regulations and Health Advisories.*~~

~~USEPA, October 1999. *USEPA Contract Laboratory Program National Functional Guidelines for Organic Data Review.*~~USEPA, June 2008. *Contract Laboratory Program National Functional Guidelines for Superfund Organic Methods Data Review* (USEPA-540-R-08-01). Office of Superfund Remediation and Technology Innovation, U.S. Environmental Protection Agency Washington, DC.

USEPA, May 2009a. *National Primary Drinking Water Regulations* (EPA 816-F-09-004)

USEPA, December 2009b. *USEPA Regions 3, 6, and 9 Regional Screening Levels.* http://www.epa.gov/Region6/6pd/rcra_c/pd-n/screen.htm.

~~USEPA, November 2002. *OSWER Draft Guidance for Evaluating the Vapor Intrusion to Indoor Air Pathway from Groundwater and Soils (Subsurface Vapor Intrusion Guidance).*~~

~~USEPA, October 2004. *USEPA Contract Laboratory Program National Functional Guidelines for Inorganic Data Review.*~~

TABLES

Table 3-1
Summary of Screening Data

Parameter	Matrix	Testing Method
Volatile Organic Compounds (VOCs)	Soil	Organic Vapor Analyzer
Noticeable odors	Soil	Olfactory sense
pH	Water	Multi-parameter sonde and a flow-through cell
Conductivity	Water	Multi-parameter sonde and a flow-through cell
Dissolved Oxygen	Water	Multi-parameter sonde and a flow-through cell
Turbidity	Water	Multi-parameter sonde and a flow-through cell
Temperature	Water	Multi-parameter sonde and a flow-through cell

Table 3-2
Summary of Definitive Data

Parameter	Matrix	Preparation Method	Analytical Method
Volatile Organic Compounds (VOCs)	Soil	USEPA SW846 Method 5035	USEPA SW846 Method 8260B
Semi-volatile Organic Compounds (SVOCs)	Soil	USEPA SW846 Method 3550B	USEPA SW846 Method 8270C
Total Petroleum Hydrocarbons (TPH)	Soil	USEPA SW846 Method 5035/3550B	USEPA SW846 Method 8015B
Polychlorinated Bi-phenyls (PCBs)	Soil	USEPA SW846 Method 8082	USEPA SW846 Method 8082
Target Analyte List (TAL) Metals	Soil	USEPA SW846 Method 3050B	USEPA SW846 Methods 6010B and 7471A
Moisture Content	Soil	N/A	USEPA SM19 Method 2540B
Dry Bulk Density	Soil	N/A	ASTM Method D2937-94
Specific Gravity	Soil	N/A	ASTM Method D1429-86
Fractional Organic Carbon Content	Soil	N/A	ASTM Method D2974-87
VOCs	Groundwater	USEPA SW846 Method 5030B	USEPA SW846 Method 8260B
SVOCs	Groundwater	USEPA SW846 Method 3510C	USEPA SW846 Method 8270C
TPH	Groundwater	USEPA SW846 Method 3510C	USEPA SW846 Method 8015B
PCBs	Groundwater	USEPA SW846 Method 8082	USEPA SW846 Method 8082
TAL Metals	Groundwater	USEPA SW846 Method 3010A	USEPA SW846 Methods 6010B and 7470A
Total Dissolved Solids (TDS)	Groundwater	USEPA SM18 Method 2540C	USEPA SM18 Method 2540C

Notes:
USEPA = U.S. Environmental Protection Agency
ASTM = American Society for Testing and Materials
SW = USEPA Office of Solid Waste
SM = Standard Method
N/A = Not Applicable

Table 4-1
Summary of Additional Characterization Field QC Samples

Matrix	Analysis	Number of Field Samples	Trip Blanks [1]	Field Duplicates [2]	MS [3]	MSD [4]	Total
Soil	VOCs per USEPA SW846 Method 8260B	24	10	3	2	2	41
	SVOCs per USEPA SW846 Method 8270C	24	0	3	2	2	31
	TPHs per USEPA SW846 Method 8015B (GRO, DRO, ORO)	24	0	3	2	2	31
	PCBs per USEPA SW846 Method 8082	24	0	3	2	2	31
	TAL Metals by USEPA SW846 Methods 6010B/7471A	24	0	3	2	2	31
	Moisture Content by USEPA SM19 Method 2540B	2	0	0	0	0	2
	Dry Bulk Density by ASTM Method D2937-94	2	0	0	0	0	2
	Specific Gravity by ASTM Method D1429-86	2	0	0	0	0	2
	Fractional Organic Carbon Content by ASTM Method D2974-87	2	0	0	0	0	2
Groundwater	VOCs per USEPA SW846 Method 8260B	6	8	1	1	1	17
	SVOCs per USEPA SW846 Method 8270C	6	0	1	1	1	9
	TPHs per USEPA SW846 Method 8015B (GRO, DRO, ORO)	6	0	1	1	1	9
	PCBs per USEPA SW846 Method 8082	6	0	1	1	1	9
	TAL Metals by USEPA SW846 Methods 6010B/7470A	6	0	1	1	1	9
	Total Dissolved Solids by USEPA SM18 Method 2540C	6	0	1	1	1	9

Notes:
USEPA = U.S. Environmental Protection Agency
ASTM = American Society for Testing and Materials
SW = USEPA Office of Solid Wastes
SM = Standard Method
VOCs = Volatile Organic Compounds
SVOCs = Semi-volatile Organic Compounds
TAL = Target Analyte List
TPH = Total Petroleum Hydrocarbons
PCBs = Polychlorinated Biphenyls
GRO = Gasoline Range Organics
ORO = Oil Range Organics
DRO = Diesel Range Organics
MS = Matrix Spike
MSD = Matrix Spike Duplicate

[1] Estimated, one trip blank will accompany every shipment of VOC samples
[2] Duplicate samples will be collected at a minimum frequency of 1 for every 10 primary samples collected
[3] MS samples will be collected at a minimum frequency of 1 for every 20 primary samples collected
[4] MSD samples will be collected at a minimum frequency of 1 for every 20 primary samples collected

Table 4-2
Summary of Laboratory QC Limits

Parameter	CAS No.	RL / Evaluation Criteria					LCS				Matrix Spike Water			Matrix Spike Soil		
		Water			Soil		Water		Soil		MS Recovery		MSD	MS Recovery		MSD
		RL	NMWQCC[1]	USEPA MCL[2]	RL	SSL[3]	LCL	UCL	LCL	UCL	LCL	UCL	RPD	LCL	UCL	RPD
VOCs per USEPA SW846 Method 8260B		µg/L	µg/L	µg/L	µg/kg	mg/kg	%	%	%	%	%	%	%	%	%	%
Acetone	67-64-1	25	NV	NV	50	67,500	59	134	61	144	59	134	14	61	144	29
Acrolein	107-02-8	20	NV	NV	25	0.646	33	157	27	156	33	157	21	27	156	39
Acrylonitrile	107-13-1	10	NV	NV	25	5.97	62	124	55	144	62	124	13	55	144	24
Benzene	71-43-2	1	10	5	5	15.5	83	124	78	130	83	124	11	78	130	25
Bromobenzene	108-86-1	1	NV	NV	5	300 [5]	83	115	78	123	83	115	10	78	123	30
Bromochloromethane	74-97-5	1	NV	NV	5	NV [4]	78	112	72	122	78	112	10	72	122	23
Bromodichloromethane	75-27-4	1	NV	NV	5	5.25	76	116	73	122	76	116	10	73	122	25
Bromoform (Tribromomethane)	75-25-2	1	NV	NV	5	616	68	128	70	139	68	128	11	70	139	26
n-Butylbenzene	104-51-8	1	NV	NV	5	NV [4]	84	124	80	138	84	124	10	80	138	31
sec-Butylbenzene	135-98-8	1	NV	NV	5	NV [4]	86	127	82	132	86	127	10	82	132	29
tert-Butylbenzene	98-06-6	1	NV	NV	5	NV [4]	83	126	79	130	83	126	10	79	130	29
Chlorobenzene	108-90-7	1	NV	100	5	508	87	115	83	122	87	115	9	83	122	23
Chloroethane (Ethyl Chloride)	75-00-3	2	NV	NV	5	43,600	54	166	61	153	54	166	20	61	153	31
Chloroform	67-66-3	1	100	NV	5	5.72	85	123	79	129	85	123	10	79	129	27
o-Chlorotoluene	95-49-8	1	NV	NV	5	1,560	84	121	77	123	84	121	10	77	123	31
p-Chlorotoluene	106-43-4	1	NV	NV	5	5,500 [5]	84	120	78	129	84	120	10	78	129	29
2-Chloroethyl vinyl ether	110-75-8	5	NV	NV	25	NV [4]	63	125	52	142	63	125	24	52	142	25
Carbon disulfide	75-15-0	2	NV	NV	5	1,940	67	147	61	142	67	147	12	61	142	27
Carbon tetrachloride	56-23-5	1	10	5	5	4.38	74	139	79	135	74	139	13	79	135	29
1,1-Dichloroethane	75-34-3	1	25	NV	5	62.9	82	127	77	132	82	127	10	77	132	26
1,1-Dichloroethylene (1,1-Dichloroethene)	75-35-4	1	5	7	5	618	75	133	66	132	75	133	13	66	132	27
1,1-Dichloropropene	563-58-6	1	NV	NV	5	NV [4]	87	127	81	133	87	127	10	81	133	26
1,2-Dibromo-3-chloropropane	96-12-8	2	NV	0.2	5	0.194	61	118	67	129	61	118	15	67	129	29
1,2-Dibromoethane (EDB)	106-93-4	1	0.1	0.05	5	0.574	80	115	77	126	80	115	10	77	126	24
1,2-Dichloroethane	107-06-2	1	10	5	5	7.74	76	122	78	129	76	122	11	78	129	24
1,2-Dichloropropane	78-87-5	1	NV	5	5	14.7	81	120	74	127	81	120	11	74	127	27
1,3-Dichloropropane	142-28-9	1	NV	NV	5	1,600 [5]	81	113	78	118	81	113	11	78	118	26
2,2-Dichloropropane	594-20-7	1	NV	NV	5	NV [4]	77	138	80	137	77	138	12	80	137	28
Dibromochloromethane	124-48-1	1	NV	NV	5	11.9	74	116	78	117	74	116	11	78	117	27
Dichlorodifluoromethane	75-71-8	2	NV	NV	5	481	34	158	35	162	34	158	22	35	162	30
cis-1,2-Dichloroethylene	156-59-2	1	NV	70	5	782	81	114	74	123	81	114	10	74	123	26
cis-1,3-Dichloropropene	10061-01-5	1	NV	NV	5	NV [4]	83	119	79	130	83	119	10	79	130	23
m-Dichlorobenzene (1,3-Dichlorobenzene)	541-73-1	1	NV	NV	5	NV [4]	86	115	82	126	86	115	9	82	126	29
o-Dichlorobenzene (1,2-Dichlorobenzene)	95-50-1	1	NV	600	5	3,010	85	115	83	123	85	115	9	83	123	28
p-Dichlorobenzene (1,4-Dichlorobenzene)	106-46-7	1	NV	75	5	32.2	87	113	84	124	87	113	10	84	124	28
trans-1,2-Dichloroethylene	156-60-5	1	NV	100	5	273	82	126	77	129	82	126	10	77	129	27
trans-1,3-Dichloropropene	10061-02-6	1	NV	NV	5	NV [4]	87	123	87	131	87	123	10	87	131	27
Ethylbenzene	100-41-4	1	750	700	5	69.7	87	118	82	124	87	118	10	82	124	25
2-Hexanone	591-78-6	5	NV	NV	25	210 [5]	58	125	67	130	58	125	14	67	130	29
Hexachlorobutadiene (Hexachloro-1,3-butadiene)	87-68-3	2	NV	NV	5	61.1	71	133	77	150	71	133	12	77	150	36
Hexane	110-54-3	2	NV	NV	5	1,250	71	134	65	147	71	134	11	65	147	27

Table 4-2
Summary of Laboratory QC Limits

Parameter	CAS No.	RL / Evaluation Criteria					LCS				Matrix Spike Water			Matrix Spike Soil		
		Water			Soil		Water		Soil		MS Recovery		MSD	MS Recovery		MSD
		RL	NMWQCC[1]	USEPA MCL[2]	RL	SSL[3]	LCL	UCL	LCL	UCL	LCL	UCL	RPD	LCL	UCL	RPD
VOCs per USEPA SW846 Method 8260B		µg/L	µg/L	µg/L	µg/kg	mg/kg	%	%	%	%	%	%	%	%	%	%
Isopropylbenzene (Cumene)	98-82-8	1	NV	NV	5	3,210	87	131	82	133	87	131	10	82	133	27
p-Isopropyltoluene	99-87-6	1	NV	NV	5	NV [4]	83	125	82	132	83	125	9	82	132	29
4-Methyl-2-pentanone (Methyl Isobutyl Ketone)	108-10-1	5	NV	NV	25	5,950	62	125	69	125	62	125	13	69	125	24
Methyl bromide	74-83-9	2	NV	NV	5	22.3	55	151	60	146	55	151	21	60	146	31
Methyl chloride	74-87-3	2	NV	NV	5	35.6	55	173	58	163	55	173	22	58	163	26
Methylene bromide	74-95-3	2	NV	NV	5	782	81	116	75	128	81	116	10	75	128	26
Methylene chloride	75-09-2	5	100	5	10	199	69	125	62	140	69	125	11	62	140	25
Methyl ethyl ketone (2-Butanone)	78-93-3	5	NV	NV	25	39,600	61	127	66	134	61	127	13	66	134	23
Methyl Tert Butyl Ether (tert-Butyl Methyl Ether)	1634-04-4	1	NV	NV	5	862	75	116	70	131	75	116	10	70	131	25
Naphthalene	91-20-3	5	30	NV	5	45	59	125	59	143	59	125	15	59	125	31
n-Propylbenzene	103-65-1	1	NV	NV	5	3,400 [5]	86	125	78	129	86	125	10	78	129	29
Styrene	100-42-5	1	NV	100	5	8,970	78	118	79	123	78	118	11	79	123	28
1,1,1,2-Tetrachloroethane	630-20-6	1	NV	NV	5	29.2	81	119	81	121	81	119	10	81	121	25
1,1,1-Trichloroethane	71-55-6	1	60	200	5	21,800	79	133	80	133	79	133	11	80	133	27
1,1,2,2-Tetrachloroethane	79-34-5	1	10	NV	5	7.98	71	120	70	128	71	120	11	70	128	30
1,1,2-Trichloroethane	79-00-5	1	10	5	5	17.2	80	114	76	118	80	114	11	76	118	28
1,2,3-Trichlorobenzene	87-61-6	1	NV	NV	5	49 [5]	64	126	78	136	64	126	16	78	136	34
1,2,3-Trichloropropane	98-18-4	2	NV	NV	5	0.915	77	115	74	125	77	115	12	74	125	30
1,2,4-Trichlorobenzene	120-82-1	1	NV	70	5	143	68	123	82	137	68	123	11	82	137	32
1,2,4-Trimethylbenzene	95-63-6	2	NV	NV	5	62 [5]	82	120	77	129	82	120	10	77	129	29
1,3,5-Trimethylbenzene	108-67-8	2	NV	NV	5	780 [5]	83	123	79	129	83	123	10	79	129	31
Tetrachloroethylene	127-18-4	1	20	5	5	6.99	80	131	79	132	80	131	12	79	132	27
Toluene	108-88-3	1	750	1,000	5	5,570	86	116	80	123	86	116	10	80	123	26
Trichloroethylene	79-01-6	1	100	5	5	45.7	85	124	78	132	85	124	10	78	132	28
Trichlorofluoromethane	75-69-4	2	NV	NV	5	2,010	66	156	67	149	66	156	15	67	149	29
Vinyl chloride	75-01-4	1	1	2	5	0.865	57	153	60	145	57	153	22	60	145	29
Vinyl acetate	108-05-4	10	NV	NV	25	3,650	38	159	25	164	38	159	11	25	164	35
m,p-Xylene	--	2	NV	NV	10	NV [4]	86	121	82	128	86	121	10	82	128	25
o-Xylene	95-47-6	1	NV	NV	5	9,550	83	121	82	126	83	121	10	82	126	25
Dibromofluoromethane (surr)	1868-53-7	--	--	--	--	--	87	116	80	121	--	--	--	--	--	--
Toluene-D8 (surr)	2037-26-5	--	--	--	--	--	86	112	71	130	--	--	--	--	--	--
4-Bromofluorobenzene (surr)	460-00-4	--	--	--	--	--	84	120	59	148	--	--	--	--	--	--
1,2-Dichloroethane-D4 (surr)	17060-07-0	--	--	--	--	--	76	127	77	123	--	--	--	--	--	--
SVOCs by USEPA SW846 Method 8270C		µg/L	µg/L	µg/L	µg/kg	mg/kg	%	%	%	%	%	%	%	%	%	%
Benzoic Acid	65-85-0	25	NV	NV	830	240,000 [5]	10	50	44	116	10	50	40	44	116	36
2-Chlorophenol	95-57-8	5	NV	NV	170	391	44	103	54	97	44	103	29	54	97	31
4-Chloro-3-methyl phenol	59-50-7	5	NV	NV	170	6,100 [4]	53	105	59	102	53	105	24	59	102	27
2,4-Dichlorophenol	120-83-2	5	NV	NV	170	183	53	108	60	101	53	108	26	60	101	30
2,4-Dimethylphenol	105-67-9	5	NV	NV	170	1,220	37	91	49	89	37	91	28	49	89	31
2,4-Dinitrophenol	51-28-5	25	NV	NV	830	122	37	111	39	107	37	111	30	39	107	40
4,6-Dinitro-o-cresol	534-52-1	10	NV	NV	330	6.11	62	115	58	109	62	115	26	58	109	37
2-Methylphenol (Cresol, o-)	95-48-7	5	NV	NV	170	3,100 [5]	35	91	53	94	35	91	30	53	94	29

Table 4-2
Summary of Laboratory QC Limits

Parameter	CAS No.	RL / Evaluation Criteria					LCS				Matrix Spike Water			Matrix Spike Soil		
		Water			Soil		Water		Soil		MS Recovery		MSD	MS Recovery		MSD
		RL	NMWQCC[1]	USEPA MCL[2]	RL	SSL[3]	LCL	UCL	LCL	UCL	LCL	UCL	RPD	LCL	UCL	RPD
SVOCs by USEPA SW846 Method 8270C		µg/L	µg/L	µg/L	µg/kg	mg/kg	%	%	%	%	%	%	%	%	%	%
3&4-Methylphenol (Cresol, m- & p-)	--	5	NV	NV	170	3,410 [8]	32	85	54	95	32	85	29	54	95	31
2-Nitrophenol	88-75-5	5	NV	NV	170	NV [4]	49	111	55	96	49	111	30	55	96	30
4-Nitrophenol	100-02-7	25	NV	NV	830	NV [4]	13	55	56	106	13	55	31	56	106	29
Pentachlorophenol	87-86-5	25	NV	NV	830	29.8	57	118	50	115	57	118	26	50	115	33
Phenol	108-95-2	5	NV	NV	170	18,300	13	54	55	99	13	54	34	55	99	28
2,4,5-Trichlorophenol	95-95-4	5	NV	NV	170	6,110	59	106	60	101	59	106	23	60	101	28
2,4,6-Trichlorophenol	88-06-2	5	NV	NV	170	61.1	58	107	60	100	58	107	24	60	100	27
Acenaphthene	83-32-9	5	NV	NV	170	3,440	58	106	59	97	58	106	21	59	97	29
Acenaphthylene	208-96-8	5	NV	NV	170	NV [4]	58	105	58	98	58	105	21	58	98	30
Anthracene	120-12-7	5	NV	NV	170	17,200	65	108	61	104	65	108	19	61	104	29
Benzidine	92-87-5	25	NV	NV	1700	0.0211	15	73	10	156	15	73	23	10	156	50
Benzo(a)anthracene	56-55-3	5	NV	NV	170	6.21	63	111	60	106	63	111	19	60	106	31
Benzo(a)pyrene	50-32-8	5	0.7	0.2	170	0.621	62	106	59	102	62	106	20	59	102	32
Benzo(b)fluoranthene	205-99-2	5	NV	NV	170	6.21	63	109	60	107	63	109	20	60	107	31
Benzo(g,h,i)perylene	191-24-2	5	NV	NV	170	NV [4]	61	111	56	103	61	111	21	56	103	32
Benzo(k)fluoranthene	207-08-9	5	NV	NV	170	62.1	64	111	61	107	64	111	20	61	107	30
4-Bromophenyl phenyl ether	101-55-3	5	NV	NV	170	NV [4]	64	107	60	104	64	107	20	60	104	26
Butyl benzyl phthalate	85-68-7	5	NV	NV	330	260 [5]	59	114	57	110	59	114	20	57	110	28
Benzyl Alcohol	100-51-6	5	NV	NV	170	6,100 [5]	34	98	51	102	34	98	27	51	102	34
2-Chloronaphthalene (b-Chloronaphthalene)	91-58-7	5	NV	NV	170	6,260	54	105	57	95	54	105	24	57	95	28
4-Chloroaniline (p-Chloroaniline)	106-47-8	10	NV	NV	330	2.4 [5]	53	103	19	85	53	103	22	19	85	34
Chrysene	218-01-9	5	NV	NV	170	621	64	111	60	107	64	111	19	60	107	31
bis(2-Chloroethoxy)methane	111-91-1	5	NV	NV	170	180 [5]	48	101	51	89	48	101	28	51	89	30
bis(2-Chloroethyl)ether	111-44-4	5	NV	NV	170	2.56	51	108	50	96	51	108	27	50	96	33
bis(2-Chloroisopropyl)ether	108-60-1	5	NV	NV	170	91.5	43	106	44	94	43	106	27	44	94	32
4-Chlorophenyl phenyl ether	7005-72-3	5	NV	NV	170	NV [4]	61	107	60	101	61	107	20	60	101	26
1,2-Dichlorobenzene	95-50-1	5	NV	600	170	3,010	41	102	47	91	41	102	28	47	91	35
1,3-Dichlorobenzene	541-73-1	5	NV	NV	170	NV [4]	38	100	45	86	38	100	28	45	86	36
1,4-Dichlorobenzene	106-46-7	5	NV	75	170	32.2	40	100	45	88	40	100	28	45	88	36
2,4-Dinitrotoluene	121-14-2	5	NV	NV	170	15.7	60	109	59	103	60	109	20	59	103	30
2,6-Dinitrotoluene	606-20-2	5	NV	NV	170	61.2	58	104	57	99	58	104	21	57	99	30
3,3'-Dichlorobenzidine	91-94-1	10	NV	NV	330	10.8	57	105	34	88	57	105	25	34	88	31
Dibenzo(a,h)anthracene	53-70-3	5	NV	NV	170	0.621	62	112	57	105	62	112	20	57	105	29
Dibenzofuran	132-64-9	5	NV	NV	170	78 [5]	61	108	58	103	61	108	20	58	103	27
Di-n-butyl phthalate (Dibutyl phthalate)	84-74-2	5	NV	NV	330	6,110	62	109	59	105	62	109	20	59	105	27
Di-n-octyl phthalate	117-84-0	5	NV	NV	330	NV [4]	60	120	59	117	60	120	24	59	117	28
Diethyl phthalate	84-66-2	5	NV	NV	330	48,900	62	109	59	106	62	109	19	59	106	27
Dimethyl phthalate	131-11-3	5	NV	NV	330	611,000	63	106	60	100	63	106	19	60	100	26
bis(2-Ethylhexyl)phthalate	117-81-7	5	NV	NV	330	347	59	116	57	111	59	116	21	57	111	29
Fluoranthene	206-44-0	5	NV	NV	170	2,290	65	114	60	110	65	114	21	60	110	32
Fluorene	86-73-7	5	NV	NV	170	2,290	61	106	60	99	61	106	19	60	99	30
Hexachlorobenzene	118-74-1	5	NV	1	170	3.04	62	107	58	103	62	107	20	58	103	27
Hexachlorobutadiene (Hexachloro-1,3-butadiene)	87-68-3	5	NV	NV	170	61.1	38	107	49	95	38	107	30	49	95	33
Hexachlorocyclopentadiene	77-47-4	5	NV	50	170	367	19	84	36	94	19	84	35	36	94	41
Hexachloroethane	76-72-1	5	NV	NV	170	61.1	35	101	44	89	35	101	29	44	89	38
Indeno(1,2,3-cd)pyrene	193-39-5	5	NV	NV	170	6.21	61	113	57	104	61	113	20	57	104	33
Isophorone	78-59-1	5	NV	NV	170	5,120	56	111	58	97	56	111	26	58	97	30
2-Methylnaphthalene	91-57-6	5	NV	NV	170	310 [5]	56	112	57	103	56	112	26	57	103	32

Table 4-2
Summary of Laboratory QC Limits

Parameter	CAS No.	RL / Evaluation Criteria					LCS				Matrix Spike Water			Matrix Spike Soil		
		Water			Soil		Water		Soil		MS Recovery		MSD	MS Recovery		MSD
		RL	NMWQCC[1]	USEPA MCL[2]	RL	SSL[3]	LCL	UCL	LCL	UCL	LCL	UCL	RPD	LCL	UCL	RPD
SVOCs by USEPA SW846 Method 8270C		µg/L	µg/L	µg/L	µg/kg	mg/kg	%	%	%	%	%	%	%	%	%	%
2-Nitroaniline	88-74-4	10	NV	NV	330	610 [5]	60	109	53	106	60	109	20	53	106	29
3-Nitroaniline	99-09-2	10	NV	NV	330	NV [4]	52	107	29	85	52	107	21	29	85	31
4-Nitroaniline	100-01-6	10	NV	NV	330	24 [5]	59	111	49	104	59	111	21	49	104	31
Naphthalene	91-20-3	5	NV	NV	170	45	50	104	54	93	50	104	28	54	93	32
Nitrobenzene	98-95-3	5	NV	NV	170	49.4	52	105	53	92	52	105	28	53	92	32
N-Nitroso-di-n-propylamine	621-64-7	5	NV	NV	170	0.069 [5]	51	104	49	94	51	104	28	49	94	28
N-Nitrosodiphenylamine	86-30-6	5	NV	NV	170	993	57	110	53	107	57	110	19	53	107	28
Phenanthrene	85-01-8	5	NV	NV	170	1,830	65	108	61	103	65	108	20	61	103	32
Pyrene	129-00-0	5	NV	NV	170	1,720	60	113	58	109	60	113	20	58	109	33
1,2,4-Trichlorobenzene	120-82-1	5	NV	NV	170	143	45	104	52	93	45	104	28	52	93	32
2-Fluorophenol (surr)	367-12-4	--	--	--	--	--	19	90	45	114	--	--	--	--	--	--
Phenol-d5 (surr)	4165-62-2	--	--	--	--	--	10	68	44	124	--	--	--	--	--	--
2,4,6-Tribromophenol (surr)	118-79-6	--	--	--	--	--	36	137	50	128	--	--	--	--	--	--
Nitrobenzene-d5 (surr)	4165-60-0	--	--	--	--	--	49	119	41	123	--	--	--	--	--	--
2-Fluorobiphenyl (surr)	321-60-8	--	--	--	--	--	45	118	46	122	--	--	--	--	--	--
Terphenyl-d14 (surr)	1718-51-0	--	--	--	--	--	46	135	45	135	--	--	--	--	--	--
TAL Metals by USEPA SW846 Methods 6010B/7470A/7471A		µg/L	µg/L	µg/L	mg/kg	mg/kg	%	%	%	%	%	%	%	%	%	%
Aluminum	7429-90-5	100	NV	NV	10	78,100	87	111	82	116	83	119	25	50	200	30
Antimony	7440-36-0	10	NV	6	1.5	31.3	88	108	82	102	81	124	25	20	200	30
Arsenic	7440-38-2	15	100	10	2	3.9	88	109	85	104	84	124	25	76	111	30
Barium	7440-39-3	10	1,000	2,000	1	15,600	92	112	87	112	85	120	25	52	159	30
Beryllium	7440-41-7	5	NV	4	0.5	156	89	113	84	114	79	121	25	72	105	30
Cadmium	7440-43-9	5	10	5	0.5	77.9	88	111	87	107	82	119	25	40	130	30
Calcium	7440-70-2	200	NV	NV	20	NV [4]	90	111	82	114	48	153	25	43	165	30
Chromium	7440-47-3	10	50	100	1.5	219	90	113	84	114	73	135	25	70	200	30
Cobalt	7440-48-4	10	50	NV	1	23 [5]	89	111	87	108	82	119	25	72	106	30
Copper	7440-50-8	15	1,000	1,300	2	3,130	86	112	88	109	82	129	25	37	187	30
Iron	7439-89-6	100	1,000	NV	15	54,800	89	116	87	124	52	155	25	70	200	30
Lead	7439-92-1	9	50	15	0.8	400	89	109	86	107	89	121	25	70	200	30
Magnesium	7439-95-4	200	NV	NV	20	NV [4]	92	113	90	110	62	146	25	64	145	30
Manganese	7439-96-5	10	200	NV	1	10,700	90	110	88	109	79	121	25	40	200	30
Mercury (Elemental)	7439-97-6	0.2	2	2	0.033	7.71	88	111	88	111	88	111	10	88	111	30
Nickel	7440-02-0	40	200	NV	4	1,560	89	111	87	108	84	120	25	61	126	30
Potassium	7440-09-7	3,000	NV	NV	300	NV [4]	89	114	89	109	76	132	25	56	172	30
Selenium	7782-49-2	15	50	50	1.3	391	90	110	83	103	71	140	25	76	104	30
Silver	7440-22-4	10	50	NV	1	391	86	120	87	114	75	141	25	75	141	30
Sodium	7440-23-5	1,000	NV	NV	500	NV [4]	90	117	90	112	70	203	25	78	111	30
Thallium	7440-28-0	15	NV	2	1.20	5.16	88	108	84	106	90	116	25	78	101	30
Vanadium	7440-62-2	10	NV	NV	2	391	91	111	88	108	85	120	25	50	169	30
Zinc	7440-66-6	20	10,000	NV	3	23,500	84	111	76	114	60	137	25	70	200	30
PCBs by USEPA SW846 Method 8082		µg/L	µg/L	µg/L	µg/kg	mg/kg	%	%	%	%	%	%	%	%	%	%
Aroclor 1016	12674-11-2	1	1	0.5	10	3.93	61	125	71	118	53	130	30	71	118	36
Aroclor 1221	11104-28-2	1	1	0.5	10	1.76	--	--	--	--	--	--	--	--	--	--
Aroclor 1232	11141-16-5	1	1	0.5	10	1.76	--	--	--	--	--	--	--	--	--	--
Aroclor 1242	53469-21-9	1	1	0.5	10	2.22	--	--	--	--	--	--	--	--	--	--
Aroclor 1248	12672-29-6	1	1	0.5	10	2.22	--	--	--	--	--	--	--	--	--	--
Aroclor 1254	11097-69-1	1	1	0.5	10	1.12	--	--	--	--	--	--	--	--	--	--
Aroclor 1260	11096-82-5	1	1	0.5	10	2.22	63	129	65	123	58	150	30	65	123	36

Table 4-2
Summary of Laboratory QC Limits

Parameter	CAS No.	RL / Evaluation Criteria					LCS				Matrix Spike Water			Matrix Spike Soil		
		Water			Soil		Water		Soil		MS Recovery		MSD	MS Recovery		MSD
		RL	NMWQCC[1]	USEPA MCL[2]	RL	SSL[3]	LCL	UCL	LCL	UCL	LCL	UCL	RPD	LCL	UCL	RPD
TPH by USEPA SW846 Method 8015B		µg/L	µg/L	µg/L	µg/kg	mg/kg	%	%	%	%	%	%	%	%	%	%
TPH-Gasoline Range Organics (C6-C10)	--	0.25	NA[5]	NV	8.3	NA[6]	63	126	66	122	67	171	31	37	142	17
4-Bromofluorobenzene (surr)	460-00-4	--	--	--	--	--	62	135	62	135	--	--	--	--	--	--
aaa-Trifluorotoluene (surr)	98-08-8	--	--	--	--	--	65	118	65	118	--	--	--	--	--	--
TPH-Diesel Range Organics (C10-C22)	--	0.25	NA[5]	NV	8.3	NA[6]	50	150	50	150	50	150	30	50	150	30
TPH-Oil Range Organics (>C22-C36)	--	0.1	NA[5]	NV	5.0	NA[6]	50	150	50	150	50	150	30	50	150	30
o-Terphenyll (surr)	84-15-1	--	--	--	--	--	57	115	57	115	--	--	--	--	--	--
Total Dissolved Solids by USEPA SM18 Method 2540C		mg/L	mg/L	mg/L	mg/kg	mg/kg	%	%	%	%	%	%	%	%	%	%
Total Dissolved Solids	--	10	1,000	500 [7]	--	--	90	110	--	--	--	--	--	--	--	--

Notes:

µg/kg = Micrograms per kilogram
µg/L = Micrograms per liter
USEPA = U.S. Environmental Protection Agency
LCL = Lower Control Limit
LCS = Laboratory Control Sample
mg/kg = Milligrams per kilogram
mg/L = Milligrams per liter
TPH = Total Petroleum Hydrocarbons

MS = Matrix Spike
MSD = Matrix Spike Duplicate
RL = Reporting Limit
RPD = Relative Percent Difference
UCL = Upper Control Limit
VOCs = Volatile Organic Compounds
SVOCs = Semi-volatile Organic Compounds
TAL = Target Analyte List

PCBs = Polychlorinated biphenyls
NV = No Value
NA = Not Applicable
CAS No. = Chemical Abstract Number
NMED = New Mexico Environment Department
SSL = Soil Screening Level
MCL = Maximum Contaminant Level
NMWQCC = New Mexico Water Quality Control Commission

SW = USEPA Office of Solid Waste
SM = Standard Method
RSL = Regional Screening Level

[1]NMWQCC Standards for Groundwater, if 10,000 mg/L TDS Concentration or Less, New Mexico Administrative Code 20.6.2.3103
[2] USEPA National Primary Drinking Water Regulations MCLs (816-F-09-004, May 2009)
[3]NMED, Technical Background Document for Development of Soil Screening Levels, Revision 5.0, December 2009 (Residential Soil)
[4]No Value established for NMED Residential SSL (December 2009) and USEPA Regions 3, 6, and 9 RSLs (December, 2009)
[5]USEPA Regions 3, 6, and 9 Regional Screening Levels (RSLs) (December 2009)
[6]Combined TPH values (GRO/DRO/ORO) will be compared to the applicable petroleum products presented in the NMED, TPH Screening Guidelines, October 2006.
[7]USEPA Secondary Drinking Water Standard
[8] Combined USEPA RSL (December 2009) values for Creosol -m, and -p (3,100 and 310 mg/kg, respectively)

APPENDIX B

HISTORICAL DATA SUMMARIES

Appendix B-1

Portions of: *Closure Report for Remediation of POL – Contaminated Sites and Oil/Water Separator Removals, Holloman Air Force Base, New Mexico, July – November 1995*, EBASCO Services, Inc., and Groundwater Technology Government Services, Inc., November 1995

CLOSURE REPORT FOR REMEDIATION OF POL - CONTAMINATED SITES AND OIL/WATER SEPARATOR REMOVALS HOLLOMAN AIR FORCE BASE, NEW MEXICO JULY - NOVEMBER 1995

Prepared for:

49 CES/CEV
Holloman Air Force Base, New Mexico

AND

HQ ACC/ESVR
Langley Air Force Base, Virginia

Prepared by:

EBASCO Services, Inc., dba
Foster Wheeler Environmental Corporation
143 Union Blvd., Suite 1010
Lakewood, Colorado 80228-1824

and

Groundwater Technology
Government Services, Inc.
2501 Yale Blvd., S.E.
Albuquerque, New Mexico 87106

Under Contract No. DACW-45-94 D0003
Delivery Order 6, Work Authorization Directive 13 and
Delivery Order 8, Work Authorization Directive 33

U.S. Army Corps of Engineers
Omaha District
Omaha, Nebraska

November 1995

HAFB-12/OW-CLOS.RPT

TABLE 10-2
SUMMARY OF NATIVE SOIL CONFIRMATION ANALYTICAL RESULTS AT SWMU 8 - BUILDING 231 HOLLOMAN AFB, NEW MEXICO AUGUST 1995

Sample No. SWMU-8	-01-7	-02-7	-03-7	-04-7	-05-7
Sample Location	West Corner	S. Corner	East Corner	N. Corner	Center
Date Sampled	8/8/95	8/8/95	8/8/95	8/8/95	8/8/95
TRPH by 418.1 (mg/kg)	23,000	31,000	6,500	1,200	940
VOCS by 8240 (µg/kg)					
Acetone	<100	<100	<2,000	<2,000	<2,000
Carbon disulfide	37	<25	<500	<500	<500
Benzene	<25	<25	<500	<500	<500
Tetrachloroethene	480	190	<500	<500	<500
Toluene	170	<25	<500	<500	<500
Ethylbenzene	460	84	<500	<500	<500
Xylenes	6,200	32	<500	<500	<500
1,2-Dichlorobenzene	710	3,500	<1,000	<1,000	<1,000
1,3-Dichlorobenzene	1,100	4,800	<1,000	<1,000	<1,000
1,4-Dichlorobenzene	750	3,300	<1,000	<1,000	<1,000
SEMI VOCS by 8270 (ug/kg)					
Naphthalene	27,000	<6,600	<1,300	<990	3,500
2-Methylnaphthalene	7,900	8,900	1,400	<990	<1,300
TAL METALS by 6000/7000 series (mg/kg)					
Aluminum	3,200	2,600	2,100	1,600	2,400
Arsenic	1.1	1.2	1.3	<1.0	<1.0
Barium	95	<40	<40	<40	<40
Calcium	140,000	150,000	140,000	150,000	170,000
Chromium	<6.0	<6.0	<6.0	<6.0	<6.0
Copper	11	<5.0	5.3	<5.0	<5.0

TABLE 10-2 (continued)
SUMMARY OF NATIVE SOIL CONFIRMATION ANALYTICAL RESULTS AT SWMU 8 - BUILDING 231 HOLLOMAN AFB, NEW MEXICO AUGUST 1995

Sample No. SWMU-8	-01-7	-02-7	-03-7	-04-7	-05-7
Sample Location	West Corner	S. Corner	East Corner	N. Corner	Center
Date Sampled	8/8/95	8/8/95	8/8/95	8/8/95	8/8/95
Iron	3,800	2,700	3,500	1,700	2,700
Lead	47	26	17	8.4	34
Magnesium	3,100	2,900	1,600	1,100	1,700
Manganese	61	38	49	34	48
Potassium	1,100	<1,000	<1,000	<1,000	<1,000
Zinc	35	11	18	8.8	11

Notes: < = Constituent not detected above laboratory quantitation limit

TABLE 10-3
SUMMARY OF STOCKPILE SOIL ANALYTICAL RESULTS
AT SWMU 8 - BUILDING 231
HOLLOMAN AFB, NEW MEXICO
SEPTEMBER 1995

Sample No. SWMU-8	-SP
Sample Type	Composite
Date Sampled	9/27/95
TRPH by 418.1 (mg/kg)	1,500
Aromatic Volatiles by 8021A (mg/kg)	Results
Benzene	<0.05
Toluene	<0.10
Ethylbenzene	<0.10
Xylenes	<0.20
BTEX Total	--
TPH as Gasoline	370
Lead by 7421 (mg/kg)	24
TCLP Volatiles by 1311/8240 (mg/l)	
Benzene	<0.05
Carbon tetrachloride	<0.05
Chlorobenzene	<0.05
Chloroform	<0.05
1,4-Dichlorobenzene	<0.05
1,2-Dichloroethane	<0.05
1,1-Dichloroethene	<0.05
2-Butanone	<0.02
Tetrachloroethene	<0.05
Trichloroethene	<0.05
Vinyl Chloride	<0.1
Miscellaneous Waste Characterization Analysis	
Closed Cup Flashpoint by ASTM D-93 (°F)	>220
Paint Filter by EPA 9095	No Liquids

TABLE 10-3 (continued)
SUMMARY OF STOCKPILE SOIL ANALYTICAL RESULTS
AT SWMU 8 - BUILDING 231
HOLLOMAN AFB, NEW MEXICO
SEPTEMBER 1995

Sample No. SWMU-8	-SP
Sample Type	Composite
Date Sampled	9/27/95
pH by EPA 9045A	7.1
Total Cyanide by EPA 9010A (mg/kg)	<2.0
Reactivity Sulfide by SW 846 7.3.4.2 (mg/kg)	<25
TCLP Semivolatiles by 8270A(mg/l)	
o-Cresol	<0.033
m+p-Cresol	<0.033
1,4-Dichlorobenzene	<0.033
2,4-Dinitrotoluene	<0.033
Hexachloro-1,3-butadiene	<0.033
Hexachlorobenzene	<0.033
Hexachloroethane	<0.033
Nitrobenzene	<0.033
Pentachlorophenol	<0.17
Pyridine	<0.033
2,4,5-Trichlorophenol	<0.033
2,4,6-Trichlorophenol	<0.033
TCLP Metals by 6000/7000 Series (mg/l)	
Arsenic	<0.40
Barium	<4.0
Cadmium	<0.080
Chromium	<0.080
Lead	<0.040
Mercury	<0.0080
Selenium	<0.16
Silver	<0.080

Notes: < = Constituents not detected above laboratory quantitiation limit
NA = Not Analyzed

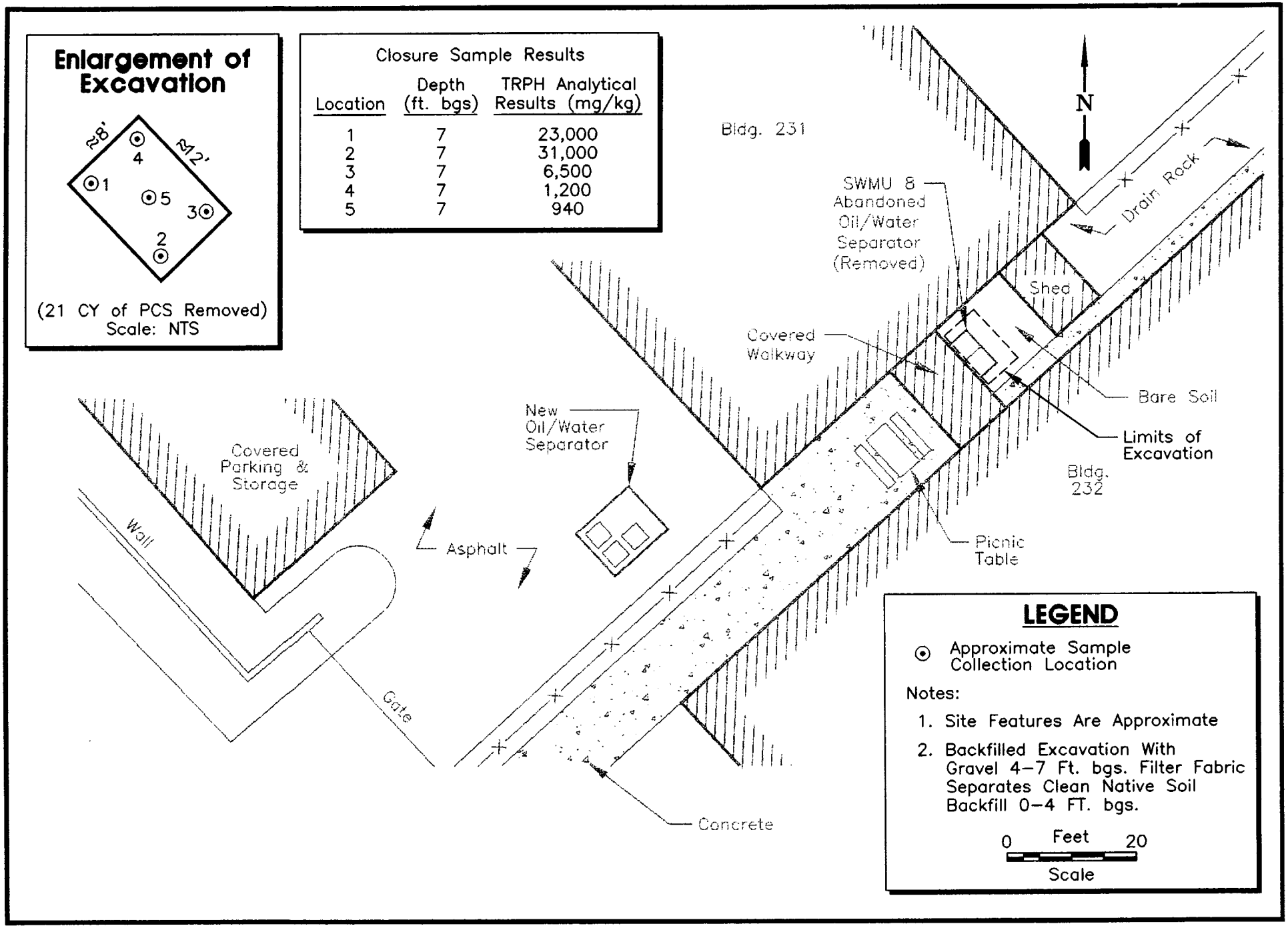

A1154-7 (1:20)

Figure 10-1: Site Map
SWMU 8, Building 231 OWS

[redacted] STATE CERTIFICATE OF WEIGHTS AND MEASURES

DRIVER'S WEIGHT CERTIFICATE

NAME OF CARRIER (BEKINS MOVING & STGE.) (BEKINS VAN LINES)

OTHER CARRIER Rhino

Vehicle Identification 530 112

Name of Shipper

Origin of Shipment _____ Destination of Shipment _____

72ARO

lbs. Gross — Gross weight of loaded vehicle, with driver only, thereon.

lbs. Tare — Tare weight of vehicle, with driver only, thereon, including full gasoline tank and all necessary pads, chains, dollies, hand trucks, and other equipment.

lbs. Net — Net weight of the shipment.

THIS FORM PRESCRIBED BY INTERSTATE COMMERCE COMMISSION
EX PARTE - MC - 19
AS AMENDED EFFECTIVE JUNE 1, 1970

Signed Hugo Barbosa Weighmaster

The gross and tare weights were obtained at scales

NMDA APPROVED

GROSS	NAME OF SCALE OWNER	(BEKINS M & S) /	(BEKINS MOVING & STGE.)
	LOCATION	2315 S. Valley Dr. Las Cruces, N. M. /	US 70 W Alamogordo, N. M.
TARE	NAME OF SCALE OWNER	(BEKINS M & S) /	(BEKINS MOVING & STGE.)
	LOCATION	2315 S. Valley Dr. Las Cruces, N. M. /	US 70 W Alamogordo, N. M.

As shown by attached weight ticket(s) prepared by the weighmaster.

(Attach only gross weight ticket if tare weight is obtained from a weight ticket on shipments listed below.)

DRIVER ON ☐ OFF ☒

(LIST OF SHIPMENTS, IF ANY, ON VEHICLE AT TIME ABOVE WEIGHTS WERE OBTAINED)

SHIPPER	NET WEIGHT

I CERTIFY THE ABOVE ENTRIES ARE TRUE AND CORRECT.

DATE 10 4/75 B/L No. _____ Ron Ponce (Driver's Signature)

HAZARDOUS WASTE MANIFEST

1. Generator's US EPA ID No.

Manifest Document No.

2. Page 1 of 1 550-112

3. Generator's Name and Mailing Address
Holloman Air Force Base
Holloman Air Force Base, NM

Contract No.
DACW45-94-D-003/006

4. Generator's Phone ( )

5. Transporter 1 Company Name: Rhino Environmental Services

6. US EPA ID Number: N/A

SWMU #19

7. Transporter 2 Company Name

8. US EPA ID Number

9. Designated Facility Name and Site Address
Rhino Environmental Services--DF-994
1 mile North of Newman, NM
Newman, NM

10. US EPA ID Number

A. Transporter's Phone 505-392-449
B. Transporter's Phone
C. Facility's Phone 505-392-485

11. Waste Shipping Name and Description	12. Containers No.	12. Containers Type	13. Total Quantity	14. Unit Wt/Vol
a. Hydrocarbon contaminated soils from POL and Oil/Water Separators			Bulk	
b.				
c.				
d.				

D. Additional Descriptions for Materials Listed Above

E. Handling Codes for Wastes Listed Above

15. Special Handling Instructions and Additional Information

16. **GENERATOR'S CERTIFICATION:** I certify the materials described above on this manifest are not subject to federal regulations for reporting proper disposal of Hazardous Waste.

Printed/Typed Name: WARREN NEFF
Signature: Warren Neff
Month Day Year: Oct 9 95

17. Transporter 1 Acknowledgement of Receipt of Materials

Printed/Typed Name: Ron Perez
Signature: Ron Perez
Month Day Year: Oct 4 95

18. Transporter 2 Acknowledgement of Receipt of Materials

Printed/Typed Name
Signature
Month Day Year

19. Discrepancy Indication Space

20. Facility Owner or Operator: Certification of receipt of waste materials covered by this manifest except as noted in Item 19.

Printed/Typed Name
Signature
Month Day Year

GENERATOR

TRANSPORTER

FACILITY

GENERATOR'S COPY

STATE CERTIFICATE OF WEIGHTS AND MEASURES

DRIVER'S WEIGHT CERTIFICATE

NAME OF CARRIER (BEKINS MOVING & STGE.) (BEKINS VAN LINES)

OTHER CARRIER Alaine

Vehicle Identification 330

Name of Shipper

Origin of Shipment Destination of Shipment

78700

lbs. Gross — Gross weight of loaded vehicle, with driver only, thereon.

lbs. Tare — Tare weight of vehicle, with driver only, thereon, including full gasoline tank and all necessary jacks, chains, dollies, hand trucks, and other equipment.

lbs. Net — Net weight of the shipment.

THIS FORM PRESCRIBED BY INTERSTATE COMMERCE COMMISSION
EX PARTE - MC - 19
AS AMENDED EFFECTIVE JUNE 1, 1970

Signed M. Ray [illegible]
Weighmaster

The gross and tare weights were obtained at scales

NMDA APPROVED

GROSS	NAME OF SCALE OWNER	(BEKINS M & S) /	(BEKINS MOVING & STGE.)
	LOCATION	2315 S. Valley Dr. Las Cruces, N. M. /	US 70 W Alamogordo, N. M.
TARE	NAME OF SCALE OWNER	(BEKINS M & S) /	(BEKINS MOVING & STGE.)
	LOCATION	2315 S. Valley Dr. Las Cruces, N. M. /	US 70 W Alamogordo, N. M.

As shown by attached weight ticket(s) prepared by the weighmaster.

(Attach only gross weight ticket if tare weight is obtained from a weight ticket on shipments listed below.)

DRIVER ON ☐ OFF ☒

(LIST OF SHIPMENTS, IF ANY, ON VEHICLE AT TIME ABOVE WEIGHTS WERE OBTAINED)

SHIPPER	NET WEIGHT

I CERTIFY THE ABOVE ENTRIES ARE TRUE AND CORRECT.

DATE 10-[illegible] B/L No.

Ron Lowe (Driver's Signature)

NON-HAZARDOUS WASTE MANIFEST

1. Generator's US EPA ID No.

Manifest Document No.

2. Page 1 of 1

GENERATOR

3. Generator's Name and Mailing Address
Holloman Air Force Base
Holloman Air Force Base, NM

Contract No.
DACW45-94-D-003/006

4. Generator's Phone ( )

5. Transporter 1 Company Name: Rhino Environmental Services

6. US EPA ID Number: N/A

Sunny 1

7. Transporter 2 Company Name

8. US EPA ID Number

9. Designated Facility Name and Site Address
Rhino Environmental Services- DF-994
1 mile North of Newman, NM
Newman, NM

10. US EPA ID Number

A. Transporter's Phone
B. Transporter's Phone 505-392-44
C. Facility's Phone 505-392-48

11. Waste Shipping Name and Description	12. Containers No.	12. Containers Type	13. Total Quantity	14. Unit Wt/Vol
a. Hydrocarbon contaminated soils from POL and Oil/Water Separators			Bulk	
b.				
c.				
d.				

D. Additional Descriptions for Materials Listed Above

E. Handling Codes for Wastes Listed Above

15. Special Handling Instructions and Additional Information

16. **GENERATOR'S CERTIFICATION:** I certify the materials described above on this manifest are not subject to federal regulations for reporting proper disposal of Hazardous Waste.

Printed/Typed Name: WARNER NEFF
Signature: Warner Neff
Month 10 Day 04 Year 91

TRANSPORTER

17. Transporter 1 Acknowledgement of Receipt of Materials

Printed/Typed Name: Ray Perry
Signature
Month Day Year

18. Transporter 2 Acknowledgement of Receipt of Materials

Printed/Typed Name
Signature
Month Day Year

FACILITY

19. Discrepancy Indication Space

20. Facility Owner or Operator: Certification of receipt of waste materials covered by this manifest except as noted in Item 19.

Printed/Typed Name
Signature
Month Day Year

GENERATOR'S COPY

OTERO/LINCOLN COUNTY
REGIONAL LANDFILL

TRANSACTION #: 012692

CO. NAME: Rhino Environmental

ADDRESS: P.O. Box 2327

CITY & STATE: Hobbs, NM

DATE: 10-05-95 TIME: 15:38

TRUCK NO.: 15-H

GROSS WEIGHT: 34140 INB

TARE WEIGHT: 14620

NET TONS: 9.76

COST $: 214.72

5% TAX $: 10.74

TOTAL DUE $: 225.46

WASTE #: 5

WASTE DESC.: Construction Debris

WASTE ORIGIN: H.A.F.B.

DRIVER: GL Buck

NON-HAZARDOUS WASTE MANIFEST

1. Generator's US EPA ID No.

Manifest Document No.

2. Page 1 of 451

3. Generator's Name and Mailing Address
Holloman Air Force Base
Holloman Air Force Base, NM

Contract No. DACW45-94-D-003/006

4. Generator's Phone ( )

5. Transporter 1 Company Name: Rhino Environmental Services

6. US EPA ID Number: N/A

SWM

7. Transporter 2 Company Name

8. US EPA ID Number

9. Designated Facility Name and Site Address
~~Rhino Env. Services-DP-9940W~~
~~1 mile North of Newman, NM~~
~~Newman, NM~~
Otero Landfill

US EPA ID Number

A. Transporter's Phone 505-392-4498

B. Transporter's Phone

C. Facility's Phone 505-392-4898

11. Waste Shipping Name and Description	12. Containers No.	Type	13. Total Quantity	14. Unit Wt/Vol
a. Concrete Debrie			90.76 BULK	tons
b.				
c.				
d.				

D. Additional Descriptions for Materials Listed Above

E. Handling Codes for Wastes Listed Above

15. Special Handling Instructions and Additional Information

16. **GENERATOR'S CERTIFICATION:** I certify the materials described above on this manifest are not subject to federal regulations for reporting proper disposal of Hazardous Waste.

Printed/Typed Name: WARNER NEFF — Signature: Warner Neff — Month 10 Day 05 Year 95

17. Transporter 1 Acknowledgement of Receipt of Materials

Printed/Typed Name: Glen Buehler — Signature: Gl Buehler — Month 10 Day 05 Year 95

18. Transporter 2 Acknowledgement of Receipt of Materials

Printed/Typed Name — Signature — Month Day Year

19. Discrepancy Indication Space

20. Facility Owner or Operator: Certification of receipt of waste materials covered by this manifest except as noted in Item 19.

Printed/Typed Name — Signature — Month Day Year

GENERATOR

TRANSPORTER

FACILITY

ORIGINAL – RETURN TO GENERATOR

Appendix B-2

Portions of: *Additional Characterization of POL-Contaminated Sites SWMU-3, SWMU-8, SWMU-36, SWMU-123 and OT-44, Holloman Air Force Base, New Mexico.*
Groundwater Technology Government Services, Inc., February 29, 1996.

FILE 17-G
j.m.

GROUNDWATER
TECHNOLOGY
GOVERNMENT SERVICES

Groundwater Technology Government Services, Inc.
2501 Yale Boulevard SE, Suite 204 Albuquerque, NM 87106 USA
Tel: (505) 242-3113 Fax: (505) 242-1103

February 29, 1996

Job No. 830012211.01.030

Mr. Mark Mercier
Omaha District
U.S. Army Corps of Engineers
ATTN: CEMRO-ED-EA
215 North 17th Street
Omaha, Nebraska 68102

Re: ADDITIONAL CHARACTERIZATION OF POL-CONTAMINATED SITES SWMU-3, SWMU-8, SWMU-36, SWMU-123 AND OT-44 HOLLOMAN AIR FORCE BASE, NEW MEXICO
Delivery Order 11 Work Authorization Directive 1
Under Contract No. DACW45-94-D-0003

Dear Mr. Mercier:

Introduction

Additional characterization to support remedial design efforts for four Solid Waste Management Unit Sites (SWMUs) and one Installation Restoration Program (IRP) site was conducted between January 29, 1996 and February 2, 1996. The characterization was performed to determine the extent of soil in excess of 1,000 parts per million (ppm) at these sites. To accomplish this, soil samples were collected and analyzed at SWMU 3, SWMU 8, SWMU 36, SWMU 123, and Site OT-44 (AOC-P). Figure 1 is a map of the base indicating the locations of the five sites.

Soil samples were collected from each site using a direct push technology (DPT) soil sampling device, field screened for volatile organics constituents, and analyzed for total petroleum hydrocarbons (TPH) (gasoline and diesel range), total recoverable petroleum hydrocarbons (TRPH), and benzene, toluene, ethylbenzene and xylenes (BTEX). These data will be used to determine the approximate mass of petroleum-contaminated soil

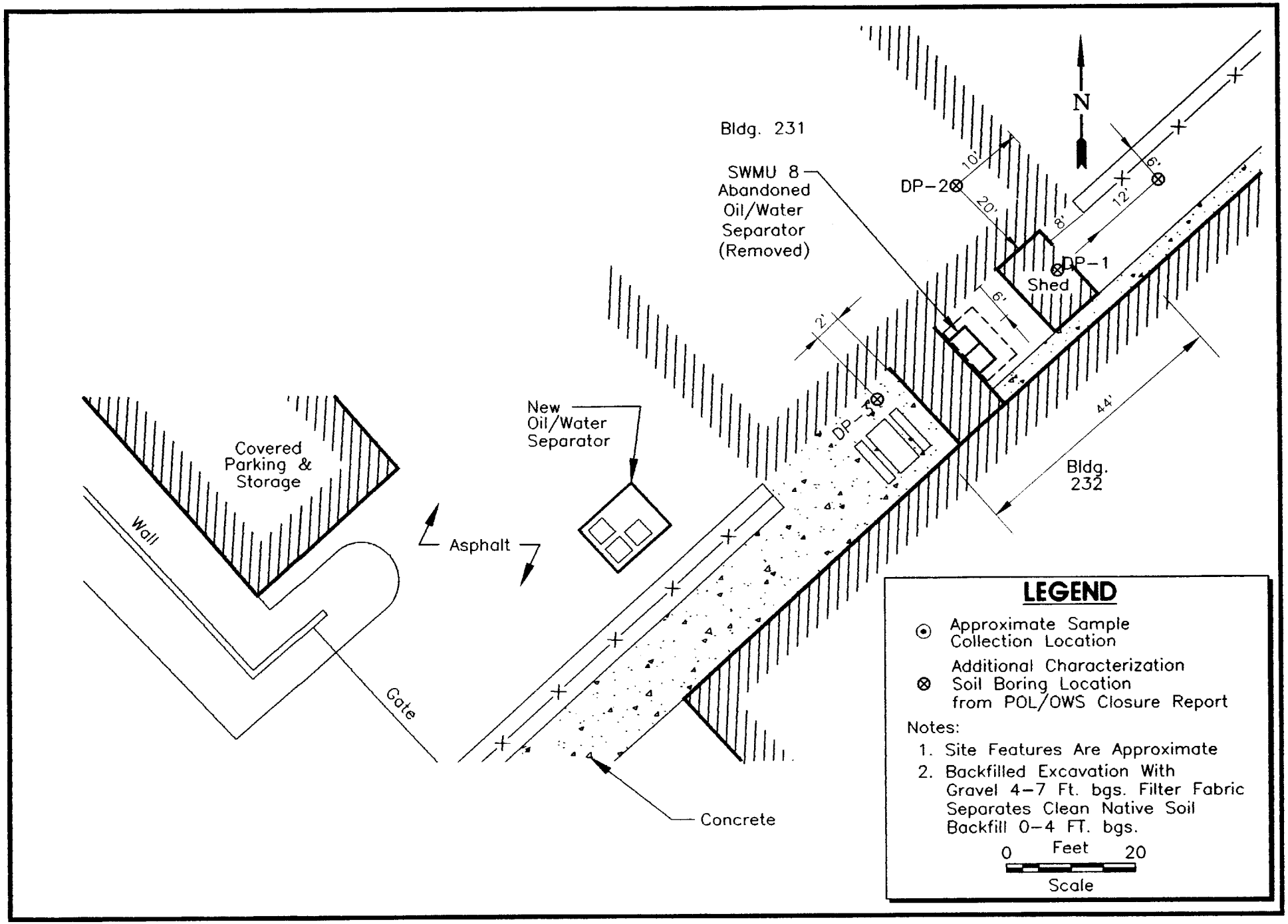

2-2FEB96, 2/29/96 (1:20)

Figure 3: Site Map
SWMU 8, Building 231 OWS and Additional Characterization Sampling Locations

TABLE 3
SUMMARY OF SOIL ANALYTICAL RESULTS
SWMU -8 BUILDING 231 OWS
HOLLOMAN AFB, NM
Delivery Order 11 Work Authorization Directive 1
February, 1996

SAMPLE NO. AND DEPTH (FEET)	SWMU-8-DP-1--3 (3' TO 4')	SWMU-8-DP-1--5 (5' TO 6')	SWMU-8-DP-2--4 (4' TO 5')	SWMU-8-DP-2--9 (9' TO 10')	SWMU-8-DP-3-5&6 (5' TO 7')	SWMU-8-DP-3 3 &4 (3' TO 5')	SWMU-8-DP-5--3 (3' TO 4')	SWMU-8-DP-5--6 (6' TO 7')
PARAMETER								
Method 418.1 TRPH (mg/kg)	<20	<20	<20	<20	<20	<20	<20	<20

< = constituent not detected

Sumu-8

HTRW DRILLING LOG (CONTINUATION SHEET)

HOLE NUMBER: DP-1

PROJECT: DOIL WADI 83001221.01020

INSPECTOR: Tim Lewallen

SHEET 2 OF 2 SHEETS

ELEV. (a)	DEPTH (b)	DESCRIPTION OF MATERIALS (c)	FIELD SCREENING RESULTS (d)	GEOTECH SAMPLE OR CORE BOX NO. (e)	ANALYTICAL SAMPLE NO. (f)	BLOW COUNT (g)	REMARKS (h)
0		Red Brown (5YR 5/3) Fine sand trace silt, trace gravel. (dry, No odor) $CaCO_3$ - gypsum	510ppm	—		soft	Recov 2' 8"
1							
2		Red yellow (5YR 7/6) Fine SAND little silt, trace clay. (damp, No odor) $CaCO_3$ - gypsum	0ppm.	—		soft	
3			0ppm		sample		
4		red yellow (5YR 7/6) Fine SAND Little silt, trace clay, trace med sand. (wet, No odor) $CaCO_3$ - gypsum	0ppm	—		soft	Recov 3'
5			0ppm		Sample		
∇ 6		white (5YR 8/1) Fine SAND, little silt, trace clay (wet, No odor) $CaCO_3$ - gypsum	0ppm	—	(12) ~~sample~~	soft	
7		white (5YR 8/1) Fine SAND, Little silt, trace clay (wet, No odor) $CaCO_3$ - gypsum	0ppm	—		soft	Recov 3'
8		dark gray (5YR 4/1) Fine SAND little silt, trace clay (wet, H_2S odor (weak) $CaCO_3$ - gypsum	0ppm	—		soft	
9			0ppm				
		Bottom of Hole Bentonite Plugged to surface					

PROJECT: DOIL WADI

HOLE NO. DP-1

ENG FORM 5056A-R, AUG 94 (Proponent: CECW-EG)

TOTAL P.06

HTRW DRILLING LOG (CONTINUATION SHEET)

Summit

PROJECT	INSPECTOR	HOLE NUMBER	SHEET / SHEETS
DOIIWADI 830012211.01020	Tim Lewallen	DP-2	2 OF 2

ELEV. (a)	DEPTH (b)	DESCRIPTION OF MATERIALS (c)	FIELD SCREENING RESULTS (d)	GEOTECH SAMPLE OR CORE BOX NO. (e)	ANALYTICAL SAMPLE NO (f)	BLOW COUNT (g)	REMARKS (h)
2" concrete other 0		Gravel & Hand cement		—		Inch...	Recov 2'8"
1		Red Brown (5YR 4/4) Fine SAND, little silt, trace gravel (dry, No odor) Ca, O3	@1.6ppm	—		soft	
		Pink white (5YR 8/2) Fine SAND 99% sand silt, trace clay (moist, No odor)					
2		CaCO3 - gypsum	1.2 ppm	—		soft	
3			1.2 ppm				
		yellow Red (5YR 5/6) Fine SAND some silt, trace clay, (moist, No odor)					
4			1.5 ppm	—	Sample	soft	Recov 2'
5		No CaCO3 gypsum	0.9 ppm				
6			0.9 ppm				
		Yellow Red (5YR 5/6) Fine SAND Little silt, trace clay (moist, No odor) CaCO3 present gypsum					
7			1.5 ppm	—		soft	Recov 3'
8		Pink (5YR 8/4) Fine SAND, little silt, trace clay (moist, No odor) CaCO3 present - gypsum	1.7 ppm	—		Soft	
∇ 9		Pink same as 7.5-9'	0.4 ppm		Sample		
		yellow Red (5YR 5/8) Fine SAND Little silt, trace clay. (damp, No odor)				soft	Recov 2' due to Slough
10			1.5 ppm	—			
11		CaCO3 present - gypsum	0.9 ppm				
		Bottom of Hole					
12		Bentonite water & cement		—			

PROJECT	HOLE NO.
DOIIWADI 830012211.01020	DP-2

ENG FORM 5056A-R, AUG 94

(Proponent: CECW-EG)

TOTAL P.06

Sumu-8

HTRW DRILLING LOG (CONTINUATION SHEET)

HOLE NUMBER: DP-3

PROJECT: DGIIWADI 830012211101020

INSPECTOR: Tim Lewallen

SHEET 2 OF 2 SHEETS

ELEV. (a)	DEPTH (b)	DESCRIPTION OF MATERIALS (c)	FIELD SCREENING RESULTS (d)	GEOTECH SAMPLE OR CORE BOX NO. (e)	ANALYTICAL SAMPLE NO (f)	BLOW COUNT (g)	REMARKS (h)
0		~~Brown Yellowish red (5YR 5/6) Fine SAND Little silt, Trace gravel (Dry, No odor)~~		—		Soft	Recov 1'
1		Pink (5YR 8/4) Fine SAND, Little silt, Trace clay, (moist, No odor) $CaCO_3$ - gypsum	0 ppm	—		Soft	
2		↓	0 ppm	—		Soft	~~Recov~~
3		Red yellow (5YR 6/8) Fine SAND Little silt, Trace clay	0 ppm	—		Soft	Recov 2'
4		(damp, No odor) $CaCO_3$ gypsum	0 ppm				~~Re~~
5		Red yellow (5YR 6/8) Fine SAND, Little silt, Trace clay (damp, No odor)	0 ppm	—		Soft	Recov 2'
6		$CaCO_3$ - gypsum	0 ppm				
7		Red yellow (5YR 7/6) Fine SAND Little silt, Trace clay, (wet, No odor)	0 ppm	—			Recov 2'
8		$CaCO_3$ - gypsum	0 ppm				
		H_2S odor					
9		Bottom of Hole Bentonite water to surface Cement patch					

PROJECT: DGIIWADI 830012211101020

HOLE NO. DP-3

ENG FORM 5056A-R, AUG 94 (Proponent: CECW-EG)

TOTAL P.06

B Swmu 8

HTRW DRILLING LOG (CONTINUATION SHEET)

HOLE NUMBER: DP-5

PROJECT: DOIL WADI 83001 2211.01020

INSPECTOR: Tim Lewallen

SHEET 2 OF 2 SHEETS

ELEV. (a)	DEPTH (b)	DESCRIPTION OF MATERIALS (c)	FIELD SCREENING RESULTS (d)	GEOTECH SAMPLE OR CORE BOX NO. (e)	ANALYTICAL SAMPLE NO (f)	BLOW COUNT (g)	REMARKS (h)
0		Pink (5YR 8/3) Fine SAND, little silt trace gravel (dry, no odor) $CaCO_3$ gypsum		—		soft	Recov 2'8"
1		Pink (5YR 8/3) Fine SAND, some gravel, trace clay (damp, no odor) $CaCO_3$ · gypsum	1.9 ppm	—		soft	
2			0.5 ppm	—			
3			0.7 ppm		Sample		
		Pink (5YR 8/3) Fine SAND, some silt, ~~trace clay~~ (damp, no odor) $CaCO_3$ - gypsum				soft	Recov 2'
4			0.7 ppm	—			
			0.5 ppm				
5		Dk gray (5YR 4/1) Fine SAND trace coarse sand, little silt trace clay (wet, H_2S odor) $CaCO_3$ gypsum		—		soft	
▽ 6			2.5 ppm		Sample		
		Dark gray (5YR 4/1) Fine SAND little silt, trace clay (wet, H_2S odor) ~~(wet)~~ $CaCO_3$ · gypsum				soft	Recov 3'
7			1.0 ppm	—			
8			0.8 ppm				
9			1.1 ppm				
		Bottom of Hole					
10		Bentonite Pulled to surface		—			
11							TC
12							

PROJECT: DOIL WADI

HOLE NO: DP-5

ENG FORM 5056A-R, AUG 94 (Proponent: CECW-EG)

TOTAL P.06

Appendix B-3

Portions of: *Final Closure Report Addendum for Phase II Remediation of POL-Contaminated Sites and Oil/Water Separator and Waste Oil Tank Removals, Holloman Air Force Base, New Mexico.* Foster Wheeler Environmental Corporation, December 1997.

FINAL CLOSURE REPORT ADDENDUM
FOR PHASE II
REMEDIATION OF POL-CONTAMINATED SITES AND
OIL/WATER SEPARATOR AND WASTE OIL TANK REMOVALS
HOLLOMAN AIR FORCE BASE, NEW MEXICO

Prepared for:
49 CES/CEVR
Holloman Air Force Base, NM
and
HQ ACC/CEVC
Langley Air Force Base, VA

Prepared by:
Foster Wheeler Environmental Corporation
143 Union Boulevard, Suite 1010
Lakewood, Colorado 80228-1824

Under Contract No. DACW45-94-D0003

Delivery Order 11, Work Authorization Directive 3

U.S. Army Corps of Engineers
Omaha District
Omaha, Nebraska

December 1997

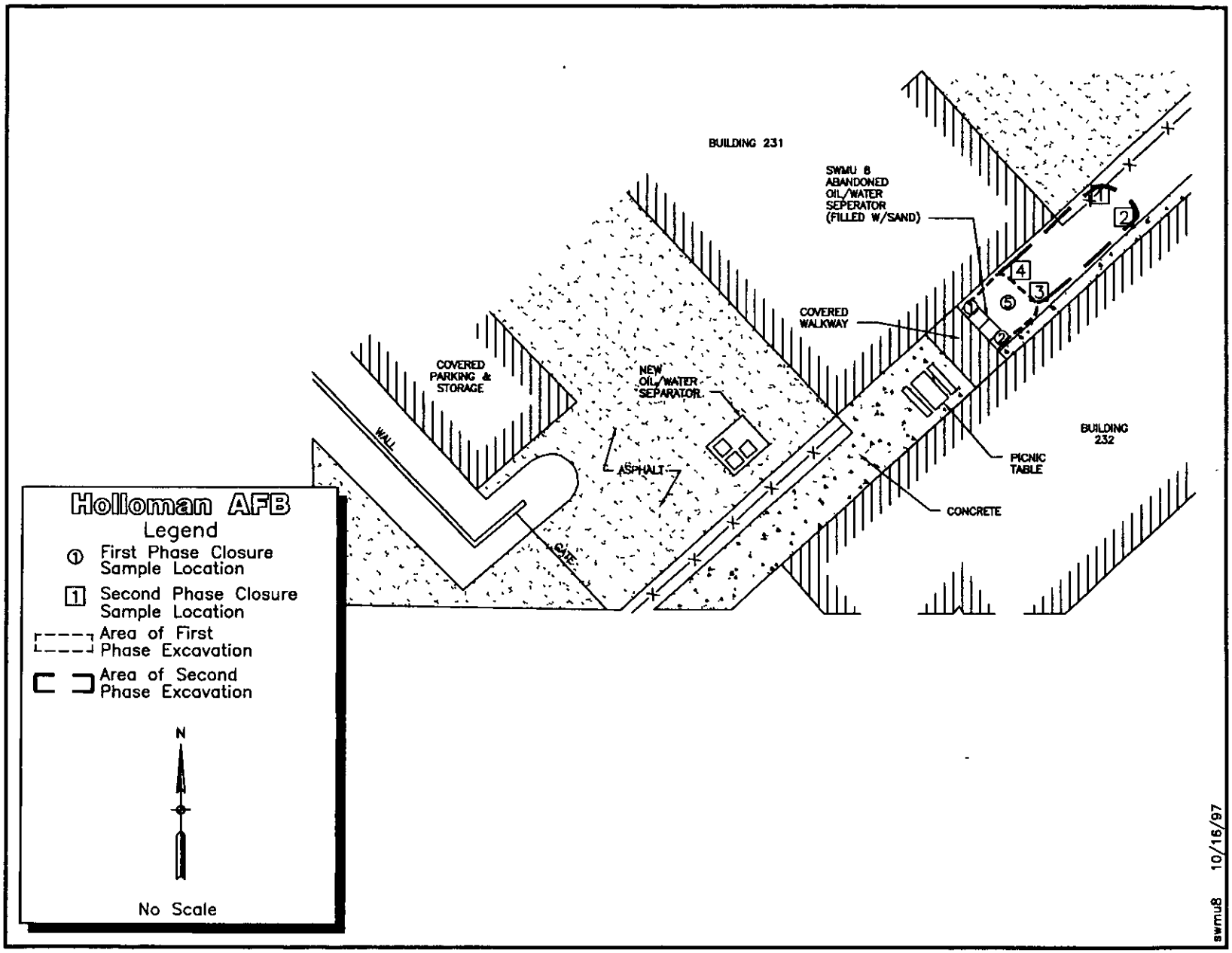

Figure 4–1. SWMU 8, Building 231 O/WS Site Map

Table 4-1
Summary of Site Closure and Stockpile Sample Analytical Results for Soil at SWMU 8, Building 231 O/WS
Page 1 of 2

Sample I.D.				SWMU08-01-06	SWMU08-02-06	SWMU08-03-06	SWMU08-04-06	SWMU8-SPI*
Figure I.D	1	2	5	1	2	3	4	—
Date Sampled	8/8/95	8/8/95	8/8/95	4/9/97	4/9/97	4/9/97	4/9/97	4/9/97
TRPH by Method 418.1 (mg/kg)	23,000	31,000	940	78	<20	58	25	36
VOCs by Method 1311/8240 (mg/L)	NA	NA	NA	NA	NA	NA	NA	ND
SVOCs by Method 1311/8270B (mg/L)	NA	NA	NA	NA	NA	NA	NA	ND
VOCs by Method 8240B (µg/kg)	NA	NA	NA	ND	ND	ND	ND	NA
SVOCs by Method 8270B (µg/kg)	NA	NA	NA	ND	ND	ND	ND	NA
VOCs by Method 8021A Benzene (mg/kg)	NA	NA	NA	<0 05	<0 05	<0.05	<0.05	<0.05
Toluene (mg/kg)	NA	NA	NA	<0 10	<0.10	<0.10	<0 10	<0 10
Ethylbenzene (mg/kg)	NA	NA	NA	<0.10	<0.10	<0.10	<0 10	<0 10
Xylenes (total) (mg/kg)	NA	NA	NA	<0.20	<0 20	<0.20	<0.20	<0.20
Metals by Method 7421 Lead (2,000 mg/kg)	NA	NA	NA	NA	NA	NA	NA	2.1
Metals by Method 9010A Total Cyanide (mg/kg)	NA	NA	NA	NA	NA	NA	NA	<2.0
Metals by Method 6010A (mg/kg)								
Aluminum[1] (77,000)	NA	NA	NA	2,200	1,800	3,600	3,400	NA
Barium[1] (5,300)	NA	NA	NA	29	20	71	62	27
Chromium[2] (230)	NA	NA	NA	<3 0	<3 0	4.1	4.0	<3.0
Copper (63,000)	NA	NA	NA	<2 5	<2.5	3 1	5 2	NA
Manganese (8,300)	NA	NA	NA	26	30	74	65	NA
Vanadium (12,000)	NA	NA	NA	6.2	6.6	9.2	11	NA
Zinc[1] (23,000)	NA	NA	NA	8 2	5.9	12	17	NA
Lead (2,000)	NA	NA	NA	5 4	<0 40	4.6	4.6	NA
Paint Filter by Method 9095	NA	NA	NA	NA	NA	NA	NA	NP

Table 4-1
Summary of Site Closure and Stockpile Sample Analytical Results for Soil at SWMU 8, Building 231 O/W
Page 2 of 2

Sample I.D.				SWMU08-01-06	SWMU08-02-06	SWMU08-03-06	SWMU08-04-06	SWMU8-SPI*
Figure I.D.	1	2	5	1	2	3	4	—
Date Sampled	8/8/95	8/8/95	8/8/95	4/9/97	4/9/97	4/9/97	4/9/97	4/9/97
Flash Point by Method ASTM D93 (°F)	NA	NA	NA	NA	NA	NA	NA	>200
pH by Method 9045A	NA	NA	NA	NA	NA	NA	NA	7.5
Reactive Sulfide by SW846 Ch#7 (mg/kg)	NA	NA	NA	NA	NA	NA	NA	<2 5

Notes.
Shading denotes site closure samples
* = Soil stockpile sample
< = Constituent not detected above laboratory quantitation limit
() = EPA Region VI risk-based criteria for industrial land use
ND = Not detected
NA = Not analyzed
NP = Not present
1 = Risk-based value above expected saturation point, value shown is residential land use risk-based concentration
2 = Represents risk-based concentration for chromium VI

NON-HAZARDOUS WASTE MANIFEST

1. Generator's US EPA ID No.

Manifest Document No. 0779

2. Page 1 of

Truck No 550111

Generator's Name and Mailing Address: Holloman Air Force Base, 49 CES/CEV, Holloman AFB, NM

Summer - 8

4. Generator's Phone ( ) 505-475-5305

5. Transporter 1 Company Name: Rhino Environmental Services

6. US EPA ID Number: N/A

7. Transporter 2 Company Name:

8. US EPA ID Number:

9. Designated Facility Name and Site Address: Rhino Environmental Services, 2 mile NW of Newman, Otero County, NM

10. US EPA ID Number: DF1051

A. Transporter's Phone

B. Transporter's Phone

C. Facility's Phone

11. Waste Shipping Name and Description	12. Containers No	Type	13. Total Quantity	14. Unit Wt/Vol
a. Hydrocarbon Contaminated Soils	1	DLK	16,800	
b.				
c.				
d.				

GENERATOR

Additional Descriptions for Materials Listed Above: NON-Hazardous Materials

E. Handling Codes for Wastes Listed Above

15. Special Handling Instructions and Additional Information: CELL M

16. GENERATOR'S CERTIFICATION: I certify the materials described above on this manifest are not subject to federal regulations for reporting proper disposal of Hazardous Waste

Printed/Typed Name: WARREN NEFF — Signature: Warren Neff — Month 4 Day 7 Year 97

TRANSPORTER

17. Transporter 1 Acknowledgement of Receipt of Materials

Printed/Typed Name: Mike Swan 550111 — Signature: [illegible] — Month 4 Day 7 Year 97

18. Transporter 2 Acknowledgement of Receipt of Materials

Printed/Typed Name: — Signature: — Month Day Year

FACILITY

19. Discrepancy Indication Space

20. Facility Owner or Operator: Certification of receipt of waste materials covered by this manifest except as noted in Item 19

Printed/Typed Name: [illegible] — Signature: [illegible] — Month Day Year

GENERATOR'S COPY

DHBI-C5 Rev

N: 013210 STATE CERTIFICATE OF WEIGHTS AND MEASURES

DRIVER'S WEIGHT CERTIFICATE

NAME OF CARRIER (BEKINS MOVING & STGE.) (BEKINS VAN LINES)

OTHER CARRIER Rhino

Vehicle Identification 550-111

Name of Shipper

Origin of Shipment Destination of Shipment

69530

YGP

lbs. Gross — Gross weight of loaded vehicle, with driver only, thereon.

lbs. Tare — Tare weight of vehicle, with driver only, thereon, including full gasoline tank and all necessary pads, chains, dollies, hand trucks, and other equipment

lbs. Net — Net weight of the shipment.

THIS FORM PRESCRIBED BY INTERSTATE COMMERCE COMMISSION
EX PARTE - MC - 19
AS AMENDED EFFECTIVE JUNE 1, 1970

Signed M. Patwanda
Weighmaster

The gross and tare weights were obtained at scales

NMDA APPROVED

GROSS	NAME OF SCALE OWNER	(BEKINS M & S) /	(BEKINS MOVING & STGE.)
	LOCATION	2315 S. Valley Dr. Las Cruces, N. M. /	US 70 W Alamogordo, N. M. ✓
TARE	NAME OF SCALE OWNER	(BEKINS M & S) /	(BEKINS MOVING & STGE.)
	LOCATION	2315 S. Valley Dr. Las Cruces, N. M. /	US 70 W Alamogordo, N. M.

As shown by attached weight ticket(s) prepared by the weighmaster.

(Attach only gross weight ticket if tare weight is obtained from a weight ticket on shipments listed below.)

DRIVER ON ☐ OFF ☒

Chg 500

(LIST OF SHIPMENTS, IF ANY, ON VEHICLE AT TIME ABOVE WEIGHTS WERE OBTAINED)

SHIPPER	NET WEIGHT

I CERTIFY THE ABOVE ENTRIES ARE TRUE AND CORRECT.

DATE 4-24-97 B/L No.

Michael (Driver's Signature)

N: 013193 STATE CERTIFICATE OF WEIGHTS AND MEASURES

DRIVER'S WEIGHT CERTIFICATE

NAME OF CARRIER (BEKINS MOVING & STGE.) (BEKINS VAN LINES)

OTHER CARRIER Rhino

Vehicle Identification 550-111

Name of Shipper

Origin of Shipment Destination of Shipment

35730

lbs. Gross — Gross weight of loaded vehicle, with driver only, thereon

lbs. Tare — Tare weight of vehicle, with driver only, thereon, including full gasoline tank and all necessary pads, chains, dollies, hand trucks, and other equipment.

lbs. Net — Net weight of the shipment.

TH[illegible] PRESCRIBED BY INTERSTATE C[illegible] COMMISSION
E[illegible] MC - 19
AS [illegible]DED EFFECTIVE JUNE 1, 1970

Signed M. Patwanda
Weighmaster

The gross and tare weights were obtained at scales

NMDA APPROVED

GROSS	NAME OF SCALE OWNER	(BEKINS M & S) /	(BEKINS MOVING & STGE.)
	LOCATION	2315 S. Valley Dr. Las Cruces, N. M /	US 70 W Alamogordo, N M
TARE	NAME OF SCALE OWNER	(BEKINS M & S) /	(BEKINS MOVING & STGE.)
	LOCATION	2315 S. Valley Dr. Las Cruces, N. M /	US 70 W Alamogordo, N. M. ✓

As shown by attached weight ticket(s) prepared by the weighmaster.

(Attach only gross weight ticket if tare weight is obtained from a weight ticket on shipments listed below.)

DRIVER ON ☐ OFF ☒

Chg 500

(LIST OF SHIPMENTS, IF ANY, ON VEHICLE AT TIME ABOVE WEIGHTS WERE OBTAINED)

SHIPPER	NET WEIGHT

I CERTIFY THE ABOVE ENTRIES ARE TRUE AND CORRECT.

DATE 4-21-97 B/L No.

(Driver's Signature)

NON-HAZARDOUS WASTE MANIFEST

1. Generator's US EPA ID No.

Manifest Document No. 05-40

2. Page 1 of

Truck #2 SS0111

Scum 8

3. Generator's Name and Mailing Address: Holloman Air Force Base, 49 CES/CEV, Holloman AFB, NM

4. Generator's Phone ( ) 505-475-5395

5. Transporter 1 Company Name: Rhino Environmental Services

6. US EPA ID Number: N/A

7. Transporter 2 Company Name

8. US EPA ID Number

9. Designated Facility Name and Site Address: Rhino Environmental Services, 2 mile NW of Newman, Otero County, NM

10. US EPA ID Number: DP1051

A. Transporter's Phone

B. Transporter's Phone

C. Facility's Phone

11. Waste Shipping Name and Description	12. Containers No.	Type	13. Total Quantity	14. Unit Wt/Vol
a. Hydrocarbon Contaminated Soils	1	BULK	48830	
b.				
c.				
d.				

Additional Descriptions for Materials Listed Above: NON-Hazardous Materials

E. Handling Codes for Wastes Listed Above

15. Special Handling Instructions and Additional Information: CELL 4

16. GENERATOR'S CERTIFICATION: I certify the materials described above on this manifest are not subject to federal regulations for reporting proper disposal of Hazardous Waste.

Printed/Typed Name: WAYNE NEFF — Signature: Wayne Neff — Month 4 Day 27 Year 97

17. Transporter 1 Acknowledgement of Receipt of Materials

Printed/Typed Name: Michael Sillano SS0-111 — Signature: Michael Sillano — Month 4 Day 27 Year 97

18. Transporter 2 Acknowledgement of Receipt of Materials

Printed/Typed Name — Signature — Month Day Year

19. Discrepancy Indication Space

Facility Owner or Operator: Certification of receipt of waste materials covered by this manifest except as noted in Item 19.

Printed/Typed Name — Signature — Month Day Year

GENERATOR'S COPY

N: 013208 STATE CERTIFICATE OF WEIGHTS AND MEASURES

DRIVER'S WEIGHT CERTIFICATE

NAME OF CARRIER (BEKINS MOVING & STGE.) (BEKINS VAN LINES)

OTHER CARRIER Rhino

Vehicle Identification 550-111

Name of Shipper

Origin of Shipment

Destination of Shipment

560

lbs. Gross — Gross weight of loaded vehicle, with driver only, thereon

lbs. Tare — Tare weight of vehicle, with driver only, thereon, including full gasoline tank and all necessary pads, chains, dollies, hand trucks, and other equipment

lbs Net — Net weight of the shipment

Signed M. Patrenude
Weighmaster

THIS FORM PRESCRIBED BY INTERSTATE COMMERCE COMMISSION
EX PARTE - MC - 15
AS AMENDED EFFECTIVE JUNE 1 1970

The gross and tare weights were obtained at scales

NMDA APPROVED

GROSS	NAME OF SCALE OWNER	(BEKINS M & S) /	(BEKINS MOVING & STGE.)
	LOCATION	2315 S. Valley Dr. Las Cruces, N. M. /	US 70 W Alamogordo, N. M.
TARE	NAME OF SCALE OWNER	(BEKINS M & S) /	(BEKINS MOVING & STGE.)
	LOCATION	2315 S. Valley Dr. Las Cruces, N. M. /	US 70 W Alamogordo, N. M.

As shown by attached weight ticket(s) prepared by the weighmaster

(Attach only gross weight ticket if tare weight is obtained from a weight ticket on shipments listed below.)

DRIVER ON ☐ OFF ☒

Chg 500

(LIST OF SHIPMENTS, IF ANY, ON VEHICLE AT TIME ABOVE WEIGHTS WERE OBTAINED)

SHIPPER	NET WEIGHT

I CERTIFY THE ABOVE ENTRIES ARE TRUE AND CORRECT.

DATE H-21-97 B/L No.

(Driver's Signature)

Appendix B-4

Portions of: *Technical Memorandum Letter Report for SWMU 8 Soil and Groundwater Sampling and Analysis, Holloman Air Force Base, New Mexico.* Bhate Environmental Associates, Inc., August 2, 2006.

TECHNICAL MEMORANDUM
LETTER REPORT
FOR
SWMU 8 SOIL AND GROUNDWATER
SAMPLING AND ANALYSIS
HOLLOMAN AFB, NEW MEXICO

DATE: August 2, 2006

FROM: Jim Moore, Bhate Environmental Associates, Inc.

TO: Dave Griffin, 49 CES/CEV, Holloman Air Force Base, NM

SUBJECT: SWMU 8 SOIL AND GROUNDWATER SAMPLING AND ANALYSIS

1.0 INTRODUCTION

This technical memorandum was prepared by Bhate Environmental Associates, Inc. (Bhate) for the Environmental Flight 49th CES/CEV, Holloman Air Force Base (HAFB), New Mexico. This letter report contains the results of the subsurface soil and groundwater water samples that were collected at SWMU 8 (former Oil/Water Separator located at Building 231) in May 2006. This sampling event was conducted in accordance with the *Memorandum Scope of Work for Soil and Groundwater Sampling and Analysis* (Bhate, May 2006). This Scope of Work was performed through the U.S. Army Corps of Engineers (USACE), under contract DACA45-03-D-0023, Task Order No. 017.

The scope of work for SWMU 8 was prepared to meet the requirements for additional soil and groundwater characterization as requested by the New Mexico Environment Department (NMED). General comment No. 1 in the NMED Notice of Deficiency (NOD) letter to Holloman AFB dated April 14, 2006 (Appendix A) requested that additional subsurface soil samples should be collected to characterize the remaining soil contamination at the site (that is not underneath the adjacent structures) and that at least two temporary groundwater monitoring wells be installed and sampled at the site before the Phase III soil excavation can commence.

2.0 SITE LOCATION, DESCRIPTION AND BACKGROUND

SWMU 8 is the former underground Oil/Water Separator (OWS) that was located on the south side of Building 231. Building 231 (Auto Hobby Center) is located on the main base at Holloman at 642 West Connecticut Avenue. The OWS was

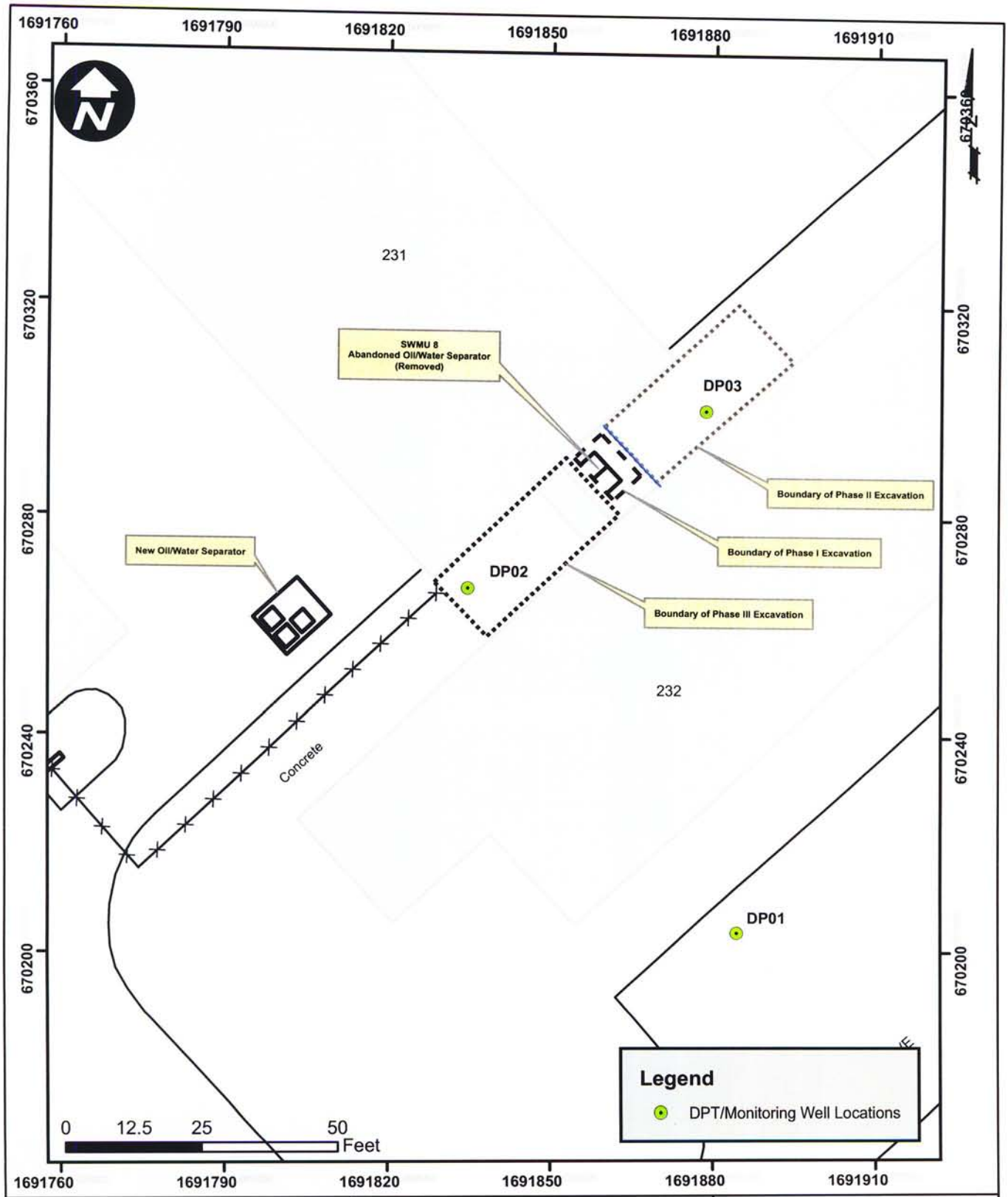

bhate associates
ENGINEERING, SCIENCE AND CONSTRUCTION

SWMU 8 Soil Boring and Monitoring Well Locations

PROJECT NO.	SCALE	DATE	DRAWN BY:
9050291	1"=25'	7/28/06	cm
			DRAWING NO: fig1

Remedial Action
Holloman Air Force Base
New Mexico

Figure 1

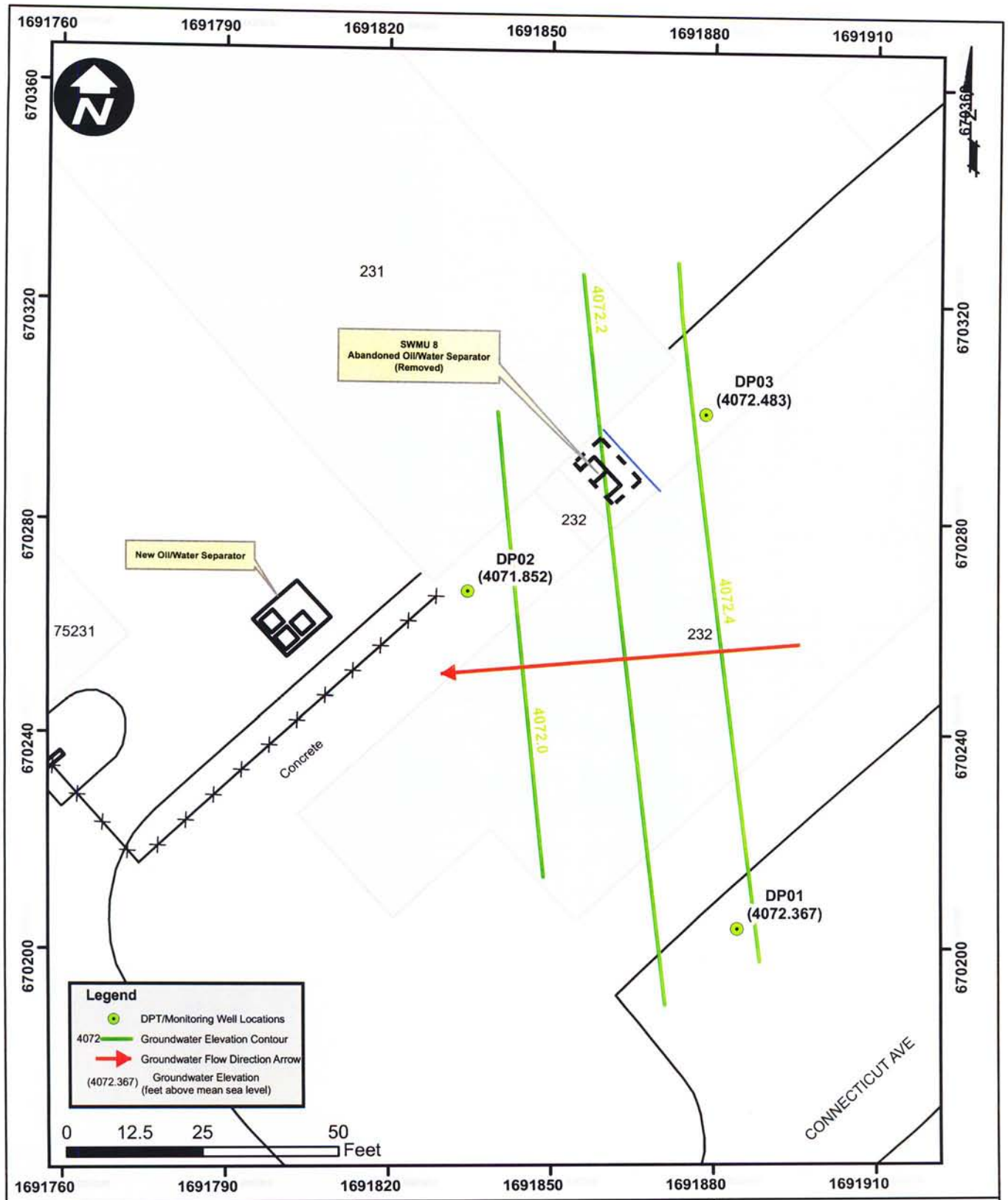

bhate associates
ENGINEERING, SCIENCE AND CONSTRUCTION

SWMU 8 Potentiometric Surface Map

PROJECT NO.	SCALE	DATE	DRAWN BY:
9050291	1"=25'	7/28/06	cm
			DRAWING NO. fig2

Remedial Action
Holloman Air Force Base
New Mexico

Figure 2

Table 1. Groundwater Elevation Summary
SWMU8
Holloman AFB, NM
Bhate Project No. 9050291.01.01

Well	Northing	Easting	Elevation TOC (ft above msl)	DTW from TOC (ft below TOC)	Groundwater Elevation July 2006 (ft above msl)
DP01	670203.701	1691884.472	4074.827	2.46	4072.367
DP02	670266.812	1691834.779	4076.042	4.19	4071.852
DP03	670300.290	1691878.600	4075.883	3.40	4072.483

NOTES: TOC = Top of Casing; DTW = Depth to Water; ft = feet; msl = mean seal level

Table 2.
Soil Analytical Data (June 2006)
SWMU-8
Holloman Air Force Base, New Mexico

Client Sample ID:	Soil Screening Levels	SWMU08DP01-5		SWMU08DP02-9		SWMU08DP02-9A		TRIP BLANK	
Lab Sample ID:	NMED	F40927-3		F40927-1		F40927-2		F40927-4	
Date Sampled:	Residential[1]	5/22/2006		5/22/2006		5/22/2006		5/22/2006	
Analyte		Result[2]	Q	Result[2]	Q	Result[2]	Q	Result[2]	Q
Volatile Organic Compounds	**mg/kg**	**µg/kg**		**µg/kg**		**µg/kg**		**µg/kg**	
Naphthalene	79.5	2.7	JB	2.9	U	2.7	U	2.0	U
TAL Metals Analysis	**mg/kg**	**mg/kg**		**mg/kg**		**mg/kg**		**mg/kg**	
Aluminum	77800	482		3590		3160		NA	
Antimony	31.3	1.2	J	0.75	U	0.75	U	NA	
Arsenic	3.9	0.82	J	0.95	J	0.56	J	NA	
Barium	15600	13.2	J	31.8		26.8	J	NA	
Beryllium	156	0.058	J	0.16	J	0.21	J	NA	
Calcium	NV	257000		171000		192000		NA	
Chromium	234	0.45	J	3.4		3.3		NA	
Cobalt	1520	0.42	J	0.90	J	0.94	J	NA	
Copper	3130	0.72	J	0.61	J	0.50	J	NA	
Iron	23500	349		3560		3330		NA	
Magnesium	NV	2090		1620		1640		NA	
Manganese	3590	5.7		33.9		30.4		NA	
Mercury	6.11	0.0078	U	0.016	J	0.0084	U	NA	
Nickel	1560	0.69	J	2.4	J	2.2	J	NA	
Potassium	NV	145	J	895	J	847	J	NA	
Selenium	391	0.61	J	0.28	U	0.31	J	NA	
Sodium	NV	175	J	249	J	167	J	NA	
Vanadium	78.2	2.4	J	7.1		7.1		NA	
Zinc	23500	3.7	J	7.7		8.2		NA	
General Chemistry		**%**		**%**		**%**		**%**	
Solids, Percent	NV	75.0		70.3		70.8		NA	

Notes:
NMED = New Mexico Environmental Department
TPH = Total Petroleum Hydrocarbons
µg/kg = micrograms per kilogram
mg/kg = milligrams per kilogram
NV = No Value
NA = Not Analyzed
Q = Qualifier
U = Not detected
J = Estimated result. Result is between the Method Detection Limit (MDL) and the Reporting Limit (RL), and/or qualified by the validating chemist (see Appendix H).
[1]NMED, June 2006. Technical Background Document for Development of Soil Screening Levels, Revision 4.0. (Residential Soil)
[2] If results are not detected (U) then the value is set at the Method Detection Limit (MDL)
[3] NMED, October 2006. TPH Screening Guidelines (Diesel #2/crankcase oil, Residential Direct Exposure)
Bold value indicate analytes above NMED Soil Screening Levels (Rev 4.0, Jun 2006) or combined TPH results above NMED TPH Screening Guidelines for Diesel #2/crankcase oil (Table 2b , Oct 2006)

Table 3.
Groundwater Analytical Data (June 2006)
SWMU-8
Holloman Air Force Base, New Mexico

Client Sample ID:	Groundwater Screening Levels		SWMU-08-DP01		SWMU-08-DP01FD		SWMU-08-DP02		TRIP BLANK		SWMU-08-DP03	
Lab Sample ID:	NMWQCC[1]	EPA MCL	F41336-1		F41336-2		F41372-1		F41372-2		F41371-1	
Date Sampled:			6/7/2006		6/7/2006		6/8/2006		6/8/2006		6/8/2006	
Analyte			Result[2]	Q	Result[2]	Q	Result[2]	Q	Result[2]	Q	Result[2]	Q
Volatile Organic Compounds	µg/L	µg/L	µg/L		µg/L		µg/L		µg/L		µg/L	
Bromodichloromethane	NV	NV	9.2		9.7		0.50	U	2.0	U	0.50	U
Chloroform	100	NV	21.0		23.7		0.50	U	2.0	U	1.7	
Dibromochloromethane	NV	NV	1.2		1.2	J	0.40	U	2.0	U	0.40	U
o-Dichlorobenzene	NV	600	0.50	U	0.50	U	0.53	J	2.0	U	0.50	U
TAL Metals Analysis	µg/L	µg/L	µg/L		µg/L		µg/L		µg/L		µg/L	
Aluminum	NV	NV	68.6	J	59.7	J	6820		NV		3450	
Arsenic	100	10	11.3		11.8		7.1	J	NV		6.6	J
Barium	1000	2000	21.6	J	22.2	J	84.3	J	NV		72.2	J
Beryllium	NV	4	2.5	J	2.3	J	4.8	J	NV		4.8	J
Calcium	NV	NV	656000		723000		822000		NV		738000	
Cobalt	50	NV	0.86	J	0.86	J	3.1	J	NV		1.2	J
Magnesium	NV	NV	81600		84100		64300		NV		57300	
Manganese	200	NV	119		227		259		NV		173	
Nickel	200	NV	5.1	J	23.8	J	8.9	J	NV		3.9	J
Potassium	NV	NV	9940	J	10200		15200		NV		6520	J
Selenium	50	50	3.8	J	3.9	J	3.8	J	NV		2.8	U
Sodium	NV	NV	78200		69000		71700		NV		72300	
Vanadium	NV	NV	108		101		29.3	J	NV		7.9	J
Zinc	10000	NV	3.4	J	1.6	U	54.3		NV		27.5	
General Chemistry	mg/L	mg/L	mg/L		mg/L		mg/L		mg/L		mg/L	
Solids, Total Dissolved	1000	NV	3190		2600		3060		NV		2910	

Notes:
NMWQCC = New Mexico Water Quality Control Commission
EPA = Environmetal Protection Agency
MCL = Maximum Contaminant Level
UTL = Upper Tolerance Limit
µg/L = micrograms per liter
mg/L = milligrams per liter
NV = No Value
Q = Qualifier
U = Not detected
J = Indicates an estimated value
[1]Standards for Groundwater, if 10,000 mg/l TDS Concentration or Less, New Mexico Administrative Code 20.6.2.3103
[2] If results are not detected (U) then the value is set at the Method Detection Limit (MDL)
Bold value indicate analytes above New Mexico Groundwater Quality Standard

HTW DRILLING LOG

HOLE NO. SWM408-DP01

SHEET 1 OF 2 SHEETS

1. COMPANY NAME: Bhate	2. DRILLING CONTRACTOR: ESN Golden, CO
3. PROJECT: GW Profiler/DPT Pilot Test	4. LOCATION: SWM408
5. NAME OF DRILLER: Dusty McNeil	6. MANUFACTURER'S DESIGNATION OF DRILL: AMS
7. SIZES & TYPES OF DRILLING & SAMPLING EQUIPMENT: AMS Power Pro 9600E; 3/4 OD rod; 2" plastic sleeves (5')	8. HOLE LOCATION: North East
	9. SURFACE ELEVATION (ft. NGVD)
	10. DATE STARTED: 5/22/06 — 11. DATE COMPLETED: 5/22/06
12. OVERBURDEN THICKNESS: NA	15. DEPTH GROUNDWATER ENCOUNTERED: ~ 2.0' bgs
13. DEPTH DRILLED INTO ROCK: NA	16. DEPTH TO WATER AND ELAPSED TIME AFTER DRILLING COMPLETED
14. TOTAL DEPTH OF HOLE: 14.0' bgs	17. OTHER WATER LEVEL MEASUREMENTS (SPECIFY)

18. GEOTECHNICAL SAMPLES	DISTURBED	UNDISTURBED	19. TOTAL NUMBER OF CORE BOXES
NA			

20. SAMPLES FOR CHEMICAL ANALYSIS	VOC	TAL METALS	OTHER (SPECIFY)	OTHER (SPECIFY)	OTHER (SPECIFY)	21. TOTAL CORE REC %
1	X	X	ORO/DRO/GRO X X	SVOC X	PCBs X	

22. DISPOSITION OF HOLE	BACKFILLED	MONITORING WELL	OTHER (SPECIFY)	23. SIGNATURE OF INSPECTOR
Temp. well		X		J.H. Moore

ELEV a	DEPTH b	DESCRIPTION OF MATERIALS c	Field Screening Results d	Geotech Sample or Core Box No. e	Analytical Sample No. f	Blow Counts g	REMARKS h
	0	(0-2.5) Sandy silt w/ minor clay (SM) fine gr. subrounded, loose dry - sl. moist 7.5YR 8/2 pinkish white	PID 20.6 FID 2.3				SWM408-DP01-5 (Sample collected @ 2 ft bgs)
	1						
	2						
		2.5-5.0 sand v. fine grained (SP) subrounded loose, saturated/wet 7.5YR 5/4 brown	PID 23.8 FID 2.1				
	3						
	4						
	5						

PROJECT

HOLE NO. DP-01

HTW DRILLING LOG

HOLE NO. SWMU08-DP01

PROJECT: GW Profiler/DPT Pilot Test

INSPECTOR: J Moore

SHEET ~ OF 2 SHEETS

ELEV. a	DEPTH b	DESCRIPTION OF MATERIALS c	Field Screening Results d	Geotech Sample or Core Box No. e	Analytical Sample No. f	Blow Counts g	REMARKS h
		(5-7.5) sand v. fine (SP) gr. subrounded well sorted, loose saturated 7.5YR 5/4 brown	PID 32.25 FID 2.99				
	6						
	7						
		(7.5-10) silty sand v. fine grains (SM) loose moist w/ minor gypsum xtals 7.5YR 5/6 strong brown	PID 31.50 FID 3.10				
	8						
	9						
	10						
	11	11-12' sand v.f.gr (SP) well sorted, loose wet 7.5YR 5/6 strong brown	PID 35 FID 2.5				
	12						
	13	13-14' silty sand w/ minor clay/caliche (SM) w/ abundent	PID 35.5 FID 1.5				
	14	TD 14.0'					

PROJECT

HOLE NO. DP-01

HTW DRILLING LOG

HOLE NO. DP-02

1. COMPANY NAME: Bhate	2. DRILLING CONTRACTOR:
SHEET 1 OF 2 SHEETS	
3. PROJECT:	4. LOCATION: SW MU 08
5. NAME OF DRILLER: Dusty McNeil	6. MANUFACTURER'S DESIGNATION OF DRILL: Ams
7. SIZES & TYPES OF DRILLING & SAMPLING EQUIPMENT: Ams Power Pro 9600E; 3¼" OD Rod; 2" x 5' Plastic Sleeves	8. HOLE LOCATION: North East
	9. SURFACE ELEVATION (ft. NGVD):
	10. DATE STARTED: 5/22/06 — 11. DATE COMPLETED: 5/22/06
12. OVERBURDEN THICKNESS: NA	15. DEPTH GROUNDWATER ENCOUNTERED: 2-2.5 ft bgs
13. DEPTH DRILLED INTO ROCK: NA	16. DEPTH TO WATER AND ELAPSED TIME AFTER DRILLING COMPLETED:
14. TOTAL DEPTH OF HOLE: 14.4' bgs	17. OTHER WATER LEVEL MEASUREMENTS (SPECIFY):

18. GEOTECHNICAL SAMPLES	DISTURBED	UNDISTURBED	19. TOTAL NUMBER OF CORE BOXES
NA			

20. SAMPLES FOR CHEMICAL ANALYSIS	VOC	TAL METALS	OTHER (SPECIFY)	OTHER (SPECIFY)	OTHER (SPECIFY)	21. TOTAL CORE REC %
2 (1 Dup)	X	X	ORO/DRO/GRO X X	SVOC X	PCBs X	

22. DISPOSITION OF HOLE	BACKFILLED	MONITORING WELL	OTHER (SPECIFY)	23. SIGNATURE OF INSPECTOR
temp well		X		A Moore

ELEV a	DEPTH b	DESCRIPTION OF MATERIALS c	Field Screening Results d	Geotech Sample or Core Box No. e	Analytical Sample No. f	Blow Counts g	REMARKS h
	0	0-2.5' bgs silty sand w/ minor clay (SM) subrounded loose sl. moist 7.5YR 7/4 pink	PID 32.8 FID 1.57				
	1						
	2						
		2.5-5.0' sand v.f.gr. (SP) subrounded loose saturated w/ H2O	PID 27.05 FID 6.10				
	3						
	4						
	5						

PROJECT: | HOLE NO. DP-02

HTW DRILLING LOG

HOLE NO. DP02

PROJECT SWMU8

INSPECTOR J Moore

SHEET 1 OF 2 SHEETS

ELEV. a	DEPTH b	DESCRIPTION OF MATERIALS c	Field Screening Results d	Geotech Sample or Core Box No. e	Analytical Sample No. f	Blow Counts g	REMARKS h
	5	5.0 - 7.5 ft bgs sand v.f.gr. (SP) saturated w/ H_2O well sorted, subrounded, 5YR 6/4 lt. reddish brown	PID 32.11 FID 1.82				
	6						
	7	7.5 - 10' bgs sand same as above not saturated but v. moist 5YR 6/6 reddish yellow	PID 27.60 FID 1.39				collected sample @ SWMU08-DP02-9 and dupe SWMU08-DP02-9-d
	8						
	9						
	10	10 - 12' bgs silty sand w/ clay (SM) moist v.f.gr. 5YR 5/6 yellowish red.	PID 31.6 FID 1.05				
	11						
	12	12 - 14 bgs silty sand (SM) w/ gypsum xtals/caliche mottled 7.5YR 6/6 reddish yellow.	PID 33.06 FID 1.02				
	13						
	14	TD @ 14.4' bgs					

PROJECT

HOLE NO. SWMU08 - DP02

HTW DRILLING LOG

SWMU 08

HOLE NO. DP03

1. COMPANY NAME: Bhate	2. DRILLING CONTRACTOR: ESN
SHEET 1 OF 1 SHEETS	
3. PROJECT	4. LOCATION: SWMU 08
5. NAME OF DRILLER: Toby Gonzales	6. MANUFACTURER'S DESIGNATION OF DRILL: Geoprobe
7. SIZES & TYPES OF DRILLING & SAMPLING EQUIPMENT: Geoprobe 6610 DT	8. HOLE LOCATION: North East
	9. SURFACE ELEVATION (ft. NGVD)
	10. DATE STARTED: 5/23/06 — 11. DATE COMPLETED: 5/23/06
12. OVERBURDEN THICKNESS: NA	15. DEPTH GROUNDWATER ENCOUNTERED
13. DEPTH DRILLED INTO ROCK: NA	16. DEPTH TO WATER AND ELAPSED TIME AFTER DRILLING COMPLETED
14. TOTAL DEPTH OF HOLE: 11.0 ft bgs	17. OTHER WATER LEVEL MEASUREMENTS (SPECIFY)

18. GEOTECHNICAL SAMPLES	DISTURBED	UNDISTURBED	19. TOTAL NUMBER OF CORE BOXES

20. SAMPLES FOR CHEMICAL ANALYSIS	VOC	METALS	OTHER (SPECIFY)	OTHER (SPECIFY)	OTHER (SPECIFY)	21. TOTAL CORE REC %
NONE						

22. DISPOSITION OF HOLE	BACKFILLED	MONITORING WELL	OTHER (SPECIFY)	23. SIGNATURE OF INSPECTOR
MW				J H Moore

ELEV a	DEPTH b	DESCRIPTION OF MATERIALS c	Field Screening Results d	Geotech Sample or Core Box No. e	Analytical Sample No. f	Blow Counts g	REMARKS h
	0	No sampling as this area has been previously excavated and backfilled to ~ 7-8 ft bgs.					
	1						
	2						
	3						
	4						
	5						

PROJECT

HOLE NO DP03

Bhate Environmental Associates — **WELL CONSTRUCTION DIAGRAM (Flush Mount)**

Project/Phase:		Well/Boring No.:	DP01
Location:	SWMU08-DP01	Drilling Method:	Direct Push Tech
Client:	USACE Omaha MW	Date(s):	5/22/06
Drilling Contractor:	ESN	Northing (NAD 83):	
Driller:	Dusty McNeil	Easting (NAD 83):	
Geologist:	Jim Moore	Bhate Project #:	

NOT TO SCALE

Surface Elevation:

Top of Casing Elevation:

Borehole Diameter (in): 3 1/4"

Well Casing Diameter (in): 1.0"

Depth to Water (ft) ~ 2.0

During Drilling: ~ 2.0

Date

Pre Development:

Date

Post Development:

Date

Top of Bentonite Seal: 0.0

Top of Filter Pack: 2.0

Top of Screen: 4.0

Bottom of Screen: 14.0

Bottom of Well: 14.25

Bottom of Filter Pack: 14.25

Borehole Depth: 14.25

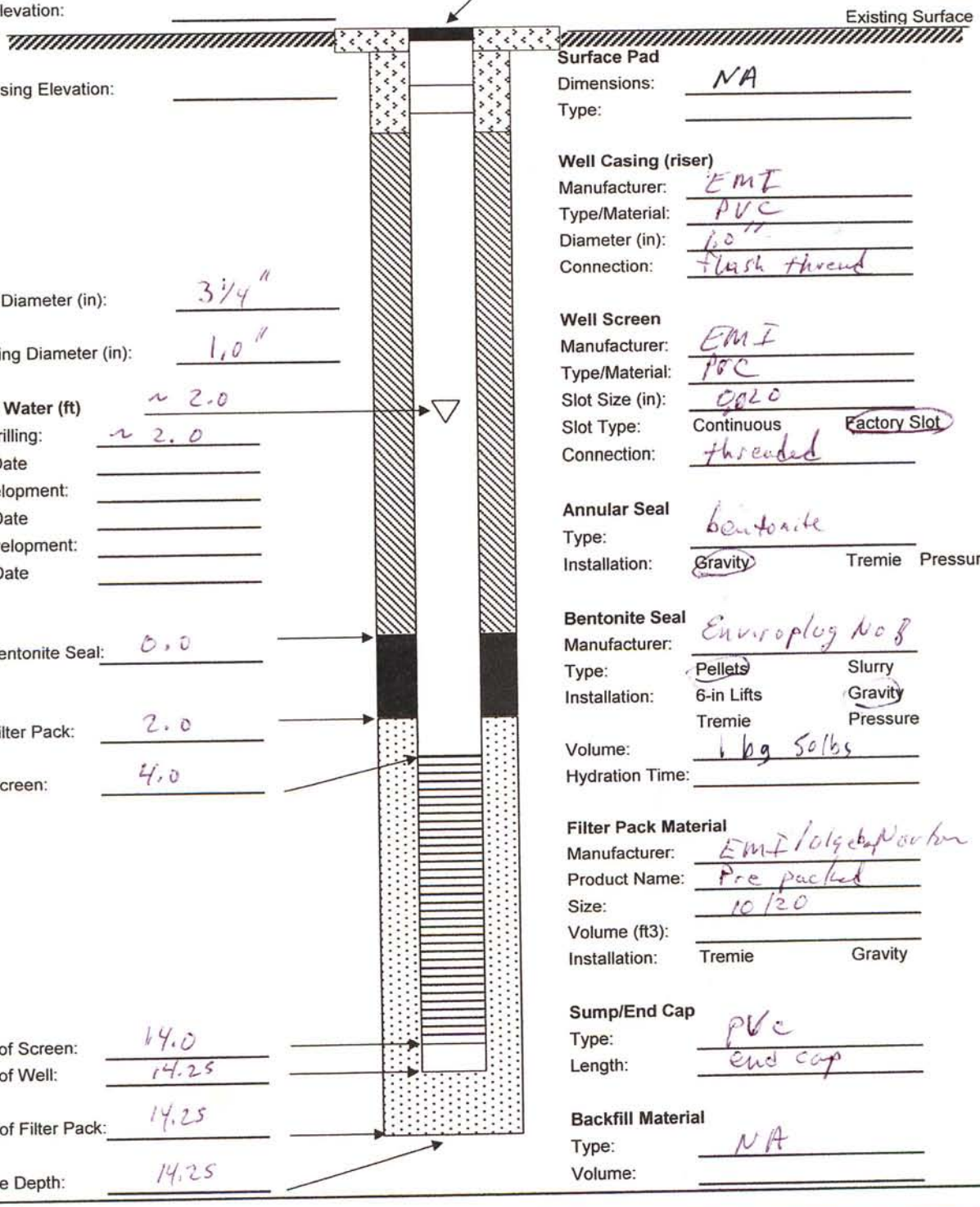

Protective Casing
Type: manhole
Dimensions: 7 inch dia
Length: 6 inches

Surface Pad
Dimensions: NA
Type:

Well Casing (riser)
Manufacturer: EMI
Type/Material: PVC
Diameter (in): 1.0"
Connection: flush thread

Well Screen
Manufacturer: EMI
Type/Material: PVC
Slot Size (in): 0.020
Slot Type: Continuous Factory Slot
Connection: threaded

Annular Seal
Type: bentonite
Installation: Gravity Tremie Pressure

Bentonite Seal
Manufacturer: Enviroplug No 8
Type: Pellets Slurry
Installation: 6-in Lifts Gravity
Tremie Pressure
Volume: 1 bg 50lbs
Hydration Time:

Filter Pack Material
Manufacturer: EMI/Colorado Northern
Product Name: Pre packed
Size: 10/20
Volume (ft3):
Installation: Tremie Gravity

Sump/End Cap
Type: PVC
Length: end cap

Backfill Material
Type: NA
Volume:

Comments:

Bhate Environmental Associates — **WELL CONSTRUCTION DIAGRAM (Flush Mount)**

Project/Phase:		Well/Boring No.:	DP02
Location:	SWMU08-DP02	Drilling Method:	DPT
Client:	USACE Omaha	Date(s):	5/22/06
Drilling Contractor:	ESN	Northing (NAD 83):	
Driller:	Rusty McNeil	Easting (NAD 83):	
Geologist:	Jim Moore	Bhate Project #:	

NOT TO SCALE

Surface Elevation:

Top of Casing Elevation:

Borehole Diameter (in): 3¼"

Well Casing Diameter (in): 1.0"

Depth to Water (ft) 2-2.5' bgs

During Drilling: 2-2.5'

Date

Pre Development:

Date

Post Development:

Date

Top of Bentonite Seal: 0.0

Top of Filter Pack: 2.0

Top of Screen: 4.4

Bottom of Screen: 14.4

Bottom of Well: 14.4

Bottom of Filter Pack: 14.4

Borehole Depth:

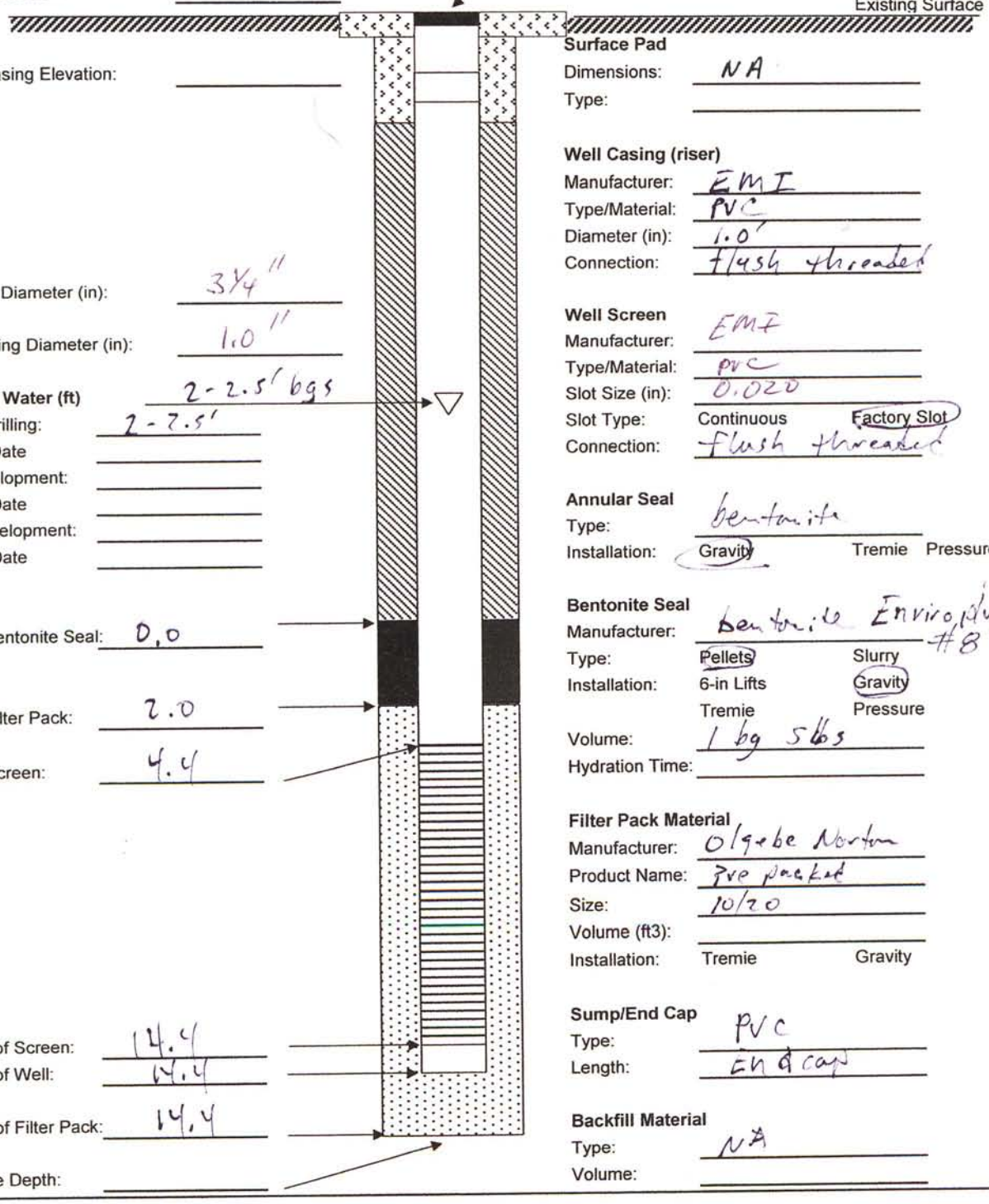

Protective Casing
Type: manhole
Dimensions: 7-inch dia
Length: 6 inches

Surface Pad
Dimensions: NA
Type:

Well Casing (riser)
Manufacturer: EMI
Type/Material: PVC
Diameter (in): 1.0"
Connection: flush threaded

Well Screen
Manufacturer: EMI
Type/Material: PVC
Slot Size (in): 0.020
Slot Type: Continuous Factory Slot
Connection: flush threaded

Annular Seal
Type: bentonite
Installation: Gravity Tremie Pressure

Bentonite Seal
Manufacturer: Bentonite Enviroplug #8
Type: Pellets Slurry
Installation: 6-in Lifts Gravity
Tremie Pressure
Volume: 1 bg 5 lbs
Hydration Time:

Filter Pack Material
Manufacturer: Olgebe Norton
Product Name: Pre packed
Size: 10/20
Volume (ft3):
Installation: Tremie Gravity

Sump/End Cap
Type: PVC
Length: End cap

Backfill Material
Type: NA
Volume:

Comments:

Bhate Environmental Associates — **WELL CONSTRUCTION DIAGRAM (Flush Mount)**

Project/Phase:		Well/Boring No.:	DP03
Location:	SWMU08 - DP03	Drilling Method:	DPT
Client:	USACE OMAHA	Date(s):	5/23/06
Drilling Contractor:	ESN	Northing (NAD 83):	
Driller:	Toby Gonzales	Easting (NAD 83):	
Geologist:	Jim Moore	Bhate Project #:	

NOT TO SCALE

Surface Elevation:

Top of Casing Elevation:

Borehole Diameter (in): 3 1/4"

Well Casing Diameter (in): 1.0"

Depth to Water (ft) ~2.0'

During Drilling:

Date

Pre Development:

Date

Post Development:

Date

Top of Bentonite Seal: 0.0

Top of Filter Pack: 4.0

Top of Screen: 6.0

Bottom of Screen: 11.0

Bottom of Well: 11.0

Bottom of Filter Pack: 11.0

Borehole Depth: 11.0

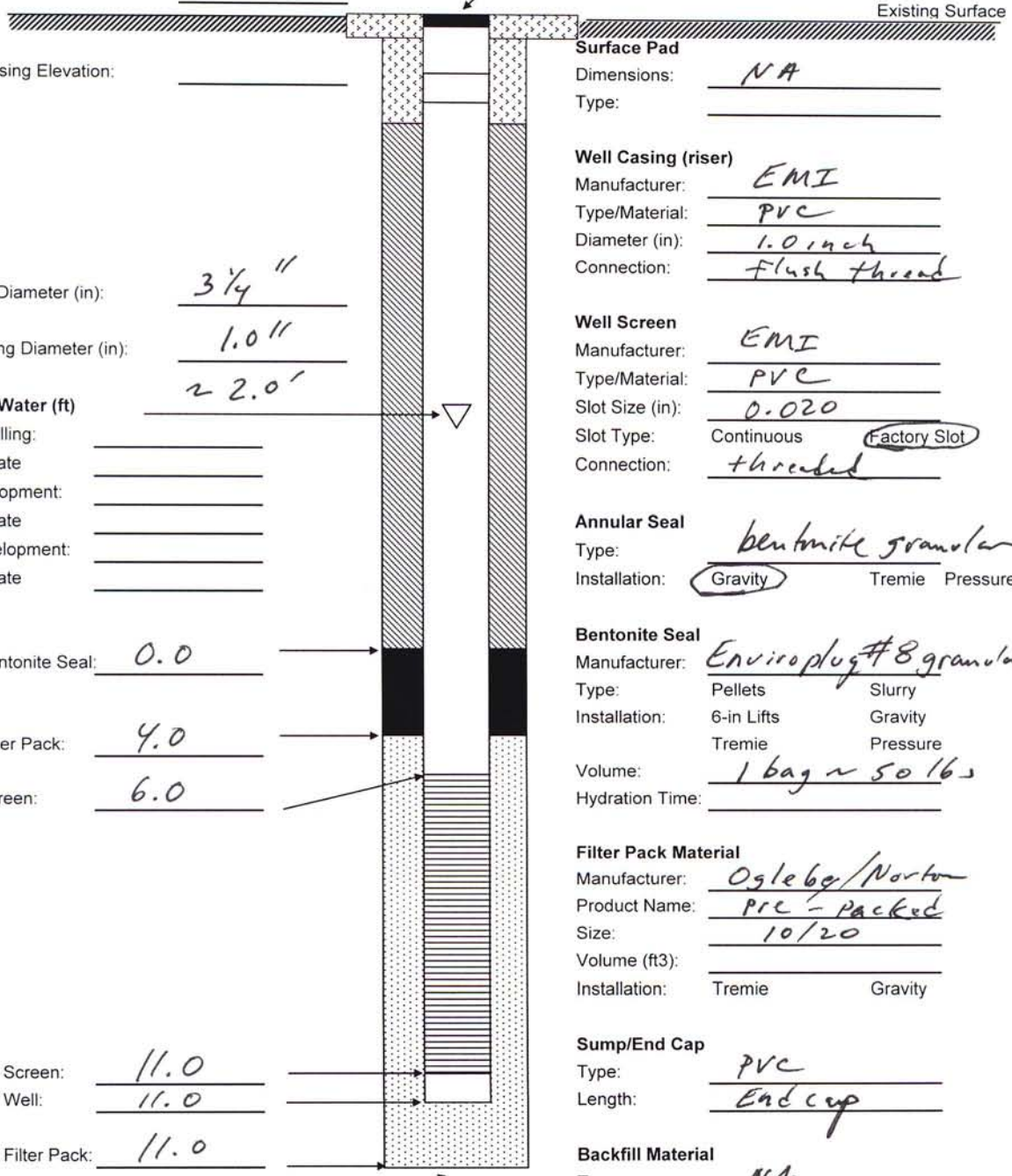

Protective Casing
Type: manhole
Dimensions: 7 inch-dia
Length: 6 inch

Surface Pad
Dimensions: NA
Type:

Well Casing (riser)
Manufacturer: EMI
Type/Material: PVC
Diameter (in): 1.0 inch
Connection: Flush thread

Well Screen
Manufacturer: EMI
Type/Material: PVC
Slot Size (in): 0.020
Slot Type: Continuous (Factory Slot)
Connection: threaded

Annular Seal
Type: bentonite granular
Installation: (Gravity) Tremie Pressure

Bentonite Seal
Manufacturer: Enviroplug #8 granular
Type: Pellets Slurry
Installation: 6-in Lifts Gravity
Tremie Pressure
Volume: 1 bag ~ 50 lbs
Hydration Time:

Filter Pack Material
Manufacturer: Ogleby/Norton
Product Name: pre-packed
Size: 10/20
Volume (ft3):
Installation: Tremie Gravity

Sump/End Cap
Type: PVC
Length: End cap

Backfill Material
Type: NA
Volume:

Comments:

Appendix B-5

~~Portions of: Final~~ Figures and Analytical Results from the Voluntary Corrective ~~Action~~ Measures ~~Work Plan~~ SWMU 8 Soil Remediation, Holloman Air Force Base, New Mexico. Bhate Environmental Associates, Inc., ~~October~~ 2008.

Table 1
Soil Analytical Data Hits Only (October 2008)
SWMU 8 Voluntary Corrective Measures, Soil Remediation
Holloman Air Force Base, New Mexico

Client Sample ID:	**Soil Screening Levels**	**Basewide Background**	**SWMU-08-SW1**	**SWMU-08-SW2**	**SWMU-08-SW3**	**SWMU-08-SW4**	**SWMU-08-SW5**	**SWMU-08-SW6**	**SWMU-08-SW6-DUP**	**SWMU-08-SW7**
Lab Sample ID:	**NMED Residential[1]**	**95% UTL for Combined Soil[2]**	**LR221292**	**LR221292**	**LR221292**	**LR221436**	**LR221436**	**LR221436**	**LR221436**	**LR221436**
Date Sampled:			**10/08/2008**	**10/08/2008**	**10/08/2008**	**10/10/2008**	**10/10/2008**	**10/10/2008**	**10/10/2008**	**10/10/2008**
Analyte			**Result**	**Result**	**Result**	**Result**	**Result**	**Result**	**Result**	**Result**
Total Petroleum Hydrocarbons	**mg/kg**	**mg/kg**	**mg/kg**	**mg/kg**	**mg/kg**	**mg/kg**	**mg/kg**	**mg/kg**	**mg/kg**	**mg/kg**
Gasoline Range Organics (C6 -C10)	800 [3]	NV	ND	ND	ND	12	ND	ND	ND	ND
Diesel Range Organics (C10-C22)	800 [3]	NV	**1,110**	**1,150**	**1,040**	**1,120**	11	ND	ND	ND
Oil Range Organics (>C22-C36)	800 [3]	NV	536	363	570	224	18	ND	ND	4.6 J
Volatile Organic Compounds	**mg/kg**	**mg/kg**	**µg/kg**	**µg/kg**	**µg/kg**	**µg/kg**	**µg/kg**	**µg/kg**	**µg/kg**	**µg/kg**
Chloroform	5.72	NV	ND	ND	ND	ND	ND	ND	ND	ND
Tetrachloroethene	6.99	NV	ND	ND	174 J	ND	ND	ND	ND	ND
Semi-Volatile Organic Compounds	**mg/kg**	**mg/kg**	**µg/kg**	**µg/kg**	**µg/kg**	**µg/kg**	**µg/kg**	**µg/kg**	**µg/kg**	**µg/kg**
Butylbenzylphthalate	260 [4]	NV	ND	ND	550	ND	ND	ND	ND	ND
Di-n-butylphthalate	6,110	NV	ND	170 J	450	180 J	ND	ND	ND	ND
Diethylphthalate	48,900	NV	99 J	81 J	ND	ND	ND	ND	ND	ND
Pyrene	1,720	NV	ND	ND	85 J	ND	ND	ND	ND	ND
bis(2-Ethylhexyl)phthalate	347	NV	610	ND	1,500	300	ND	ND	ND	ND
Polychlorinated Biphenyls	**mg/kg**	**mg/kg**	**mg/kg**	**mg/kg**	**mg/kg**	**mg/kg**	**mg/kg**	**mg/kg**	**mg/kg**	**mg/kg**
PCB-1248	2.22	NV	0.21	0.11	0.15	0.099	ND	ND	NA	ND
PCB-1254	1.12	NV	0.18	0.15	0.22	0.17	ND	ND	NA	ND
Target Analyte List Metals	**mg/kg**	**mg/kg**	**mg/kg**	**mg/kg**	**mg/kg**	**mg/kg**	**mg/kg**	**mg/kg**	**mg/kg**	**mg/kg**
Aluminum	78,100	13,722.27	4,850	2,860	2,520	2,380	1,870	1,940	1,780	1,690
Arsenic	3.9	3.66	ND	ND	ND	ND	ND	ND	ND	ND
Barium	15,600	169.25	56.8	28.6	25.5	20.6	15.3	13.4	13.0	13.5
Beryllium	156	1.53	ND	ND	ND	ND	ND	ND	ND	ND
Boron	15,600	NV	ND	ND	ND	0.609 J	1.30 J	0.821 J	2.47 J	ND
Cadmium	77.9	0.28	ND	ND	ND	ND	ND	ND	ND	ND
Calcium	NV [5]	317,331.59	61,200	128,000	126,000	131,000	123,000	108,000	117,000	78,200
Chromium	219	24.95	7.66	3.48	4.03	2.51	2.04	2.11	2.07	1.79
Cobalt	23 [4]	7.70	1.55	1.24	1.10	0.815	0.603	0.709	0.881	0.579
Copper	3,130	12.96	7.53	7.25	8.95	1.27	0.402 J	0.727 J	0.801 J	0.425 J
Iron	54,800	23,049.48	5,620	3,100	4,280	2,120	1,920	2,170	2,090	1,610
Lead	400	10.87	12.4	18.5	21	0.663	1.38	1.31	ND	2.59
Magnesium	NV [5]	16,990.65	1,800	1,910	1,530	1,090	831	1,030	1,030	1,080
Manganese	10,700	393.47	70.6	43.4	38.5	23.4	19.0	22.2	21.6	24.2
Molybdenum	391	NV	3.27	2.0	2.0	2.29	2.38	2.15	0.523 J	2.21
Nickel	1,560	17.34	2.87	2.06	2.42	1.55	1.11 J	1.28 J	1.32 J	1.18 J
Potassium	NV [5]	5,077.12	1,080	775	644	643	485	454	470	447
Silver	391	65	ND	ND	ND	ND	0.436 J	0.420 J	ND	ND
Sodium	NV [4]	5,195.97	82.8	135	108	129	105	109	98.5	92.4
Vanadium	391	42.53	22.6	6.40	5.78	3.15	4.21	4.51	4.37	3.54
Zinc	23,500	54.53	13.4	15.4	16.2	5.40	5.49	4.83 J	5.57	4.66 J
General Chemistry	**%**	**%**	**%**	**%**	**%**	**%**	**%**	**%**	**%**	**%**
Percent Moisture	NV	NV	28.30	24.89	28.22	27.15	28.43	29.08	28.56	29.80

Notes:

NMED = New Mexico Environment Department
USEPA = U.S. Environmental Protection Agency
UTL = Upper Tolerance Limit
TPH = Total Petroleum Hydrocarbons
GRO = Gasoline Range Organics
DRO = Diesel Range Organics
ORO = Oil Range Organics
SSL = Soil Screening Level
SW = Sidewall Sample

µg/kg = micrograms per kilogram
mg/kg = milligrams per kilogram
% = percent
B = Analyte found in associated method blank
J = Indicates an estimated value
ND = Not Detected
NV = No Value
NA = Not Analyzed

[1] NMED, December 2009. Technical Background Document for Development of Soil Screening Levels (SSL), Revision 5.0.
[2] Established in the *Basewide Background Study Report, Holloman Air Force Base, New Mexico* (NationView/Bhate JV III, October 2009)
[3] NMED, October 2006. TPH Screening Guidelines (Unknown Oil, Residential Direct Exposure, Table 2b.)
[4] USEPA Region 3, 6, and 9 Regional Screening Levels (RSLs) (December, 2009)
[5] No Value established for NMED Residential SSL (December, 2009) and USEPA RSL (December, 2009)

Bold value indicates analytes above NMED SSLs (Rev 5.0, Dec. 2009) or TPH results above NMED TPH Screening Guidelines (Oct., 2006)
Indicates combined TPH-GRO/DRO/ORO results exceed NMED TPH Screening Guidelines (Unknown Oil, Residential Direct Exposure)

Table 1
Soil Analytical Data Hits Only (October 2008)
SWMU 8 Voluntary Corrective Measures, Soil Remediation
Holloman Air Force Base, New Mexico

Client Sample ID:	Soil Screening Levels	Basewide Background	SWMU-08-SW8	SWMU-08-SW9	SWMU-08-SW10	SWMU-08-SW11	SWMU-08-SW12	SWMU-08-SW12-DUP	SWMU-08-SW13	SWMU-08-SW14
Lab Sample ID:	NMED Residential[1]	95% UTL for Combined Soil[2]	LR221436	LR221436	LR221436	LR221436	LR221436	LR221436	LR221436	LR221435
Date Sampled:			10/10/2008	10/10/2008	10/10/2008	10/10/2008	10/10/2008	10/10/2008	10/10/2008	10/10/2008
Analyte			Result	Result	Result	Result	Result	Result	Result	Result
Total Petroleum Hydrocarbons	**mg/kg**	**mg/kg**	**mg/kg**	**mg/kg**	**mg/kg**	**mg/kg**	**mg/kg**	**mg/kg**	**mg/kg**	**mg/kg**
Gasoline Range Organics (C6 -C10)	800 [3]	NV	ND	ND	6.8	ND	9.4	ND	9.4	5.3
Diesel Range Organics (C10-C22)	800 [3]	NV	ND	106	**1,560**	3.0	**2,380**	**954**	**1,520**	141
Oil Range Organics (>C22-C36)	800 [3]	NV	ND	213	358	2.1 J	743	700	426	148
Volatile Organic Compounds	**mg/kg**	**mg/kg**	**µg/kg**	**µg/kg**	**µg/kg**	**µg/kg**	**µg/kg**	**µg/kg**	**µg/kg**	**µg/kg**
Chloroform	5.72	NV	ND	ND	ND	ND	ND	ND	ND	ND
Tetrachloroethene	6.99	NV	ND	ND	ND	ND	ND	ND	ND	ND
Semi-Volatile Organic Compounds	**mg/kg**	**mg/kg**	**µg/kg**	**µg/kg**	**µg/kg**	**µg/kg**	**µg/kg**	**µg/kg**	**µg/kg**	**µg/kg**
Butylbenzylphthalate	260 [4]	NV	ND	ND	ND	ND	ND	ND	140 J	ND
Di-n-butylphthalate	6,110	NV	ND	ND	ND	ND	ND	150 J	170 J	ND
Diethylphthalate	48,900	NV	ND	ND	ND	ND	ND	190 J	ND	ND
Pyrene	1,720	NV	ND	ND	ND	ND	ND	ND	ND	ND
bis(2-Ethylhexyl)phthalate	347	NV	ND	ND	330	ND	430	410	700	ND
Polychlorinated Biphenyls	**mg/kg**	**mg/kg**	**mg/kg**	**mg/kg**	**mg/kg**	**mg/kg**	**mg/kg**	**mg/kg**	**mg/kg**	**mg/kg**
PCB-1248	2.22	NV	ND	ND	0.18	ND	0.34	NA	0.64	0.078 J
PCB-1254	1.12	NV	ND	0.31	0.22	ND	0.47	NA	0.71	0.16
Target Analyte List Metals	**mg/kg**	**mg/kg**	**mg/kg**	**mg/kg**	**mg/kg**	**mg/kg**	**mg/kg**	**mg/kg**	**mg/kg**	**mg/kg**
Aluminum	78,100	13,722.27	2,020	2,320	2,000	1,670	2,160	2,370	2,500	2,310
Arsenic	3.9	3.66	ND	ND	ND	ND	ND	ND	ND	ND
Barium	15,600	169.25	14.4	22.8	22.0	12.8	22.2	21.5	22.2	22.2
Beryllium	156	1.53	ND	ND	ND	ND	ND	ND	ND	ND
Boron	15,600	NV	ND	ND	0.333 J	ND	ND	2.58 J	ND	2.09 J
Cadmium	77.9	0.28	ND	ND	ND	ND	ND	ND	ND	ND
Calcium	NV [5]	317,331.59	74,100	106,000	99,300	97,400	109,000	117,000	128,000	114,000
Chromium	219	24.95	2.10	2.87	2.74	1.89	2.72	2.79	3.19	2.57
Cobalt	23 [4]	7.70	0.733	0.846	0.944	0.608	1.04	1.05	1.09	0.841
Copper	3,130	12.96	0.408 J	3.19	1.65	ND	ND	2.00	1.42	1.44
Iron	54,800	23,049.48	1,870	2,200	2,350	1,790	2,500	2,820	3,070	2,170
Lead	400	10.87	0.659	13.9	7.45	0.415 J	49.3	3.15	8.55	ND
Magnesium	NV [5]	16,990.65	1,230	1,590	2,560	877	1,530	1,760	2,850	1,140
Manganese	10,700	393.47	27.0	27.1	45.8	21.2	32.6	40.8	59.1	24.7
Molybdenum	391	NV	1.21	1.84	1.91	2.08	2.87	0.555 J	2.04	0.613 J
Nickel	1,560	17.34	1.32 J	1.56	1.84	1.01 J	1.78	2.01	2.28	1.57
Potassium	NV [5]	5,077.12	453	580	517	456	579	636	746	657
Silver	391	65	ND	ND	0.660	ND	ND	0.162 J	ND	ND
Sodium	NV [4]	5,195.97	82.1	113	113	94.3	191	102	221	98.2
Vanadium	391	42.53	2.86	8.00	5.67	2.93	4.77	5.86	6.33	3.76
Zinc	23,500	54.53	4.72 J	13.8	8.47	4.25 J	8.92	9.31	11.2	8.70
General Chemistry	**%**	**%**	**%**	**%**	**%**	**%**	**%**	**%**	**%**	**%**
Percent Moisture	NV	NV	28.37	27.35	29.59	28.23	28.89	25.06	25.50	26.26

Notes:

NMED = New Mexico Environment Department
USEPA = U.S. Environmental Protection Agency
UTL = Upper Tolerance Limit
TPH = Total Petroleum Hydrocarbons
GRO = Gasoline Range Organics
DRO = Diesel Range Organics
ORO = Oil Range Organics
SSL = Soil Screening Level
SW = Sidewall Sample

µg/kg = micrograms per kilogram
mg/kg = milligrams per kilogram
% = percent
B = Analyte found in associated method blank
J = Indicates an estimated value
ND = Not Detected
NV = No Value
NA = Not Analyzed

[1] NMED, December 2009. Technical Background Document for Development of Soil Screening Levels (SSL), Revision 5.0.
[2] Established in the *Basewide Background Study Report, Holloman Air Force Base, New Mexico* (NationView/Bhate JV III, October 2009)
[3] NMED, October 2006. TPH Screening Guidelines (Unknown Oil, Residential Direct Exposure, Table 2b.)
[4] USEPA Region 3, 6, and 9 Regional Screening Levels (RSLs) (December, 2009)
[5] No Value established for NMED Residential SSL (December, 2009) and USEPA RSL (December, 2009)

Bold value indicates analytes above NMED SSLs (Rev 5.0, Dec. 2009) or TPH results above NMED TPH Screening Guidelines (Oct., 2006)
Indicates combined TPH-GRO/DRO/ORO results exceed NMED TPH Screening Guidelines (Unknown Oil, Residential Direct Exposure)

Table 1
Soil Analytical Data Hits Only (October 2008)
SWMU 8 Voluntary Corrective Measures, Soil Remediation
Holloman Air Force Base, New Mexico

Client Sample ID:	Soil Screening Levels	Basewide Background	SWMU-08-SW15	SWMU-08-SW15OE	SWMU-08-SW16	SWMU-08-Bottom 1	SWMU-08-Bottom 2	SWMU-08-Bottom 3	SWMU-08-Bottom 4
Lab Sample ID:	NMED Residential[1]	95% UTL for Combined Soil[2]	LR221435	LR222342	LR221435	LR221292	LR221292	LR221435	LR221435
Date Sampled:			10/10/2008	10/27/2008	10/10/2008	10/08/2008	10/08/2008	10/08/2008	10/08/2008
Analyte			Result	Result	Result	Result	Result	Result	Result
Total Petroleum Hydrocarbons	**mg/kg**	**mg/kg**	**mg/kg**	**mg/kg**	**mg/kg**	**mg/kg**	**mg/kg**	**mg/kg**	**mg/kg**
Gasoline Range Organics (C6 -C10)	800 [3]	NV	7.3	ND	ND	ND	ND	ND	ND
Diesel Range Organics (C10-C22)	800 [3]	NV	**2,340**	ND	0.80 J	0.55 J	ND	ND	ND
Oil Range Organics (>C22-C36)	800 [3]	NV	642	6.0	12	3.0 J	ND	ND	3.3 J
Volatile Organic Compounds	**mg/kg**	**mg/kg**	**µg/kg**	**µg/kg**	**µg/kg**	**µg/kg**	**µg/kg**	**µg/kg**	**µg/kg**
Chloroform	5.72	NV	ND	ND	ND	1.4 J	1.7 J	ND	ND
Tetrachloroethene	6.99	NV	ND	ND	ND	ND	ND	ND	ND
Semi-Volatile Organic Compounds	**mg/kg**	**mg/kg**	**µg/kg**	**µg/kg**	**µg/kg**	**µg/kg**	**µg/kg**	**µg/kg**	**µg/kg**
Butylbenzylphthalate	260 [4]	NV	ND	ND	ND	ND	ND	ND	ND
Di-n-butylphthalate	6,110	NV	ND	ND	ND	ND	ND	ND	ND
Diethylphthalate	48,900	NV	ND	ND	ND	ND	ND	ND	ND
Pyrene	1,720	NV	ND	ND	ND	ND	ND	ND	ND
bis(2-Ethylhexyl)phthalate	347	NV	380	ND	ND	ND	ND	ND	ND
Polychlorinated Biphenyls	**mg/kg**	**mg/kg**	**mg/kg**	**mg/kg**	**mg/kg**	**mg/kg**	**mg/kg**	**mg/kg**	**mg/kg**
PCB-1248	2.22	NV	0.23	ND	ND	ND	ND	ND	ND
PCB-1254	1.12	NV	0.16	ND	ND	ND	ND	ND	ND
Target Analyte List Metals	**mg/kg**	**mg/kg**	**mg/kg**	**mg/kg**	**mg/kg**	**mg/kg**	**mg/kg**	**mg/kg**	**mg/kg**
Aluminum	78,100	13,722.27	1,800	5,100	3,980	2,980	2,690	2,840	2,780
Arsenic	3.9	3.66	ND	0.377 J	ND	ND	ND	ND	ND
Barium	15,600	169.25	11.1	42.9	53.6	18.1	20	20.0	20.0
Beryllium	156	1.53	ND	0.176 J	ND	ND	ND	ND	ND
Boron	15,600	NV	ND	7.24	1.08 J	ND	ND	0.318 J	0.346 J
Cadmium	77.9	0.28	ND	0.220 J	ND	ND	ND	ND	ND
Calcium	NV [5]	317,331.59	124,000	182,000	105,000	105,000	146,000	120,000	124,000
Chromium	219	24.95	2.03	8.37	3.61	3.17	2.78	2.92	3.07
Cobalt	23 [4]	7.70	0.767	2.90	1.34	0.95	0.80	0.816	1.03
Copper	3,130	12.96	7.45	3.69	9.48	4.33	4.24	6.09	5.46
Iron	54,800	23,049.48	1,770	6,390	3,430	2,580	2,520	2,720	3,000
Lead	400	10.87	1.71	23.0	1.13	2.35	1.34	2.11	0.715
Magnesium	NV [5]	16,990.65	1,010	6,750	1,470	1,700	1,320	1,460	1,800
Manganese	10,700	393.47	33.3	201	40.0	25.4	22.6	26.2	30.3
Molybdenum	391	NV	1.73	1.01	1.30	1.91	2.02	1.56	1.59
Nickel	1,560	17.34	1.28 J	6.07	2.35	1.84	1.61	1.54	1.67
Potassium	NV [5]	5,077.12	430	1,330	836	746	648	682	735
Silver	391	65	0.183 J	ND	0.484 J	ND	0.57	ND	0.440 J
Sodium	NV [4]	5,195.97	92.0	219	105	118	123	104	129
Vanadium	391	42.53	3.93	14.7	7.95	5.61	6.40	9.58	5.55
Zinc	23,500	54.53	5.68	26.9	9.78	8.34	5.83	7.35	8.86
General Chemistry	**%**	**%**	**%**	**%**	**%**	**%**	**%**	**%**	**%**
Percent Moisture	NV	NV	30.89	5.85	23.72	27.76	28.21	28.08	28.25

Notes:

NMED = New Mexico Environment Department
USEPA = U.S. Environmental Protection Agency
UTL = Upper Tolerance Limit
TPH = Total Petroleum Hydrocarbons
GRO = Gasoline Range Organics
DRO = Diesel Range Organics
ORO = Oil Range Organics
SSL = Soil Screening Level
SW = Sidewall Sample

µg/kg = micrograms per kilogram
mg/kg = milligrams per kilogram
% = percent
B = Analyte found in associated method blank
J = Indicates an estimated value
ND = Not Detected
NV = No Value
NA = Not Analyzed

[1] NMED, December 2009. Technical Background Document for Development of Soil Screening Levels (SSL), Revision 5.0.
[2] Established in the *Basewide Background Study Report, Holloman Air Force Base, New Mexico* (NationView/Bhate JV III, October 2009)
[3] NMED, October 2006. TPH Screening Guidelines (Unknown Oil, Residential Direct Exposure, Table 2b.)
[4] USEPA Region 3, 6, and 9 Regional Screening Levels (RSLs) (December, 2009)
[5] No Value established for NMED Residential SSL (December, 2009) and USEPA RSL (December, 2009)
Bold value indicates analytes above NMED SSLs (Rev 5.0, Dec. 2009) or TPH results above NMED TPH Screening Guidelines (Oct., 2006)
Indicates combined TPH-GRO/DRO/ORO results exceed NMED TPH Screening Guidelines (Unknown Oil, Residential Direct Exposure)

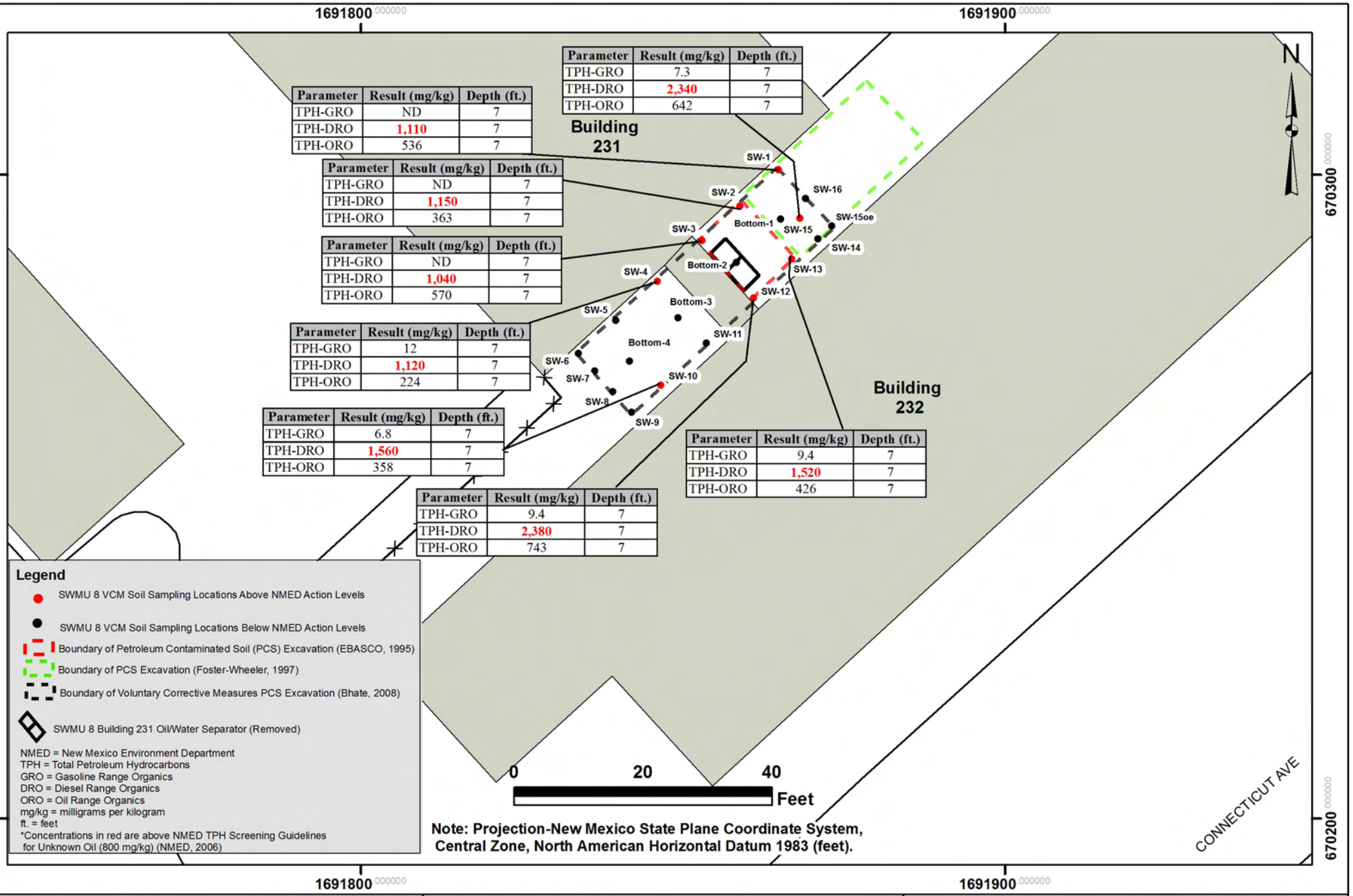

Parameter	Result (mg/kg)	Depth (ft.)
TPH-GRO	7.3	7
TPH-DRO	2,340	7
TPH-ORO	642	7

Parameter	Result (mg/kg)	Depth (ft.)
TPH-GRO	ND	7
TPH-DRO	1,110	7
TPH-ORO	536	7

Parameter	Result (mg/kg)	Depth (ft.)
TPH-GRO	ND	7
TPH-DRO	1,150	7
TPH-ORO	363	7

Parameter	Result (mg/kg)	Depth (ft.)
TPH-GRO	ND	7
TPH-DRO	1,040	7
TPH-ORO	570	7

Parameter	Result (mg/kg)	Depth (ft.)
TPH-GRO	12	7
TPH-DRO	1,120	7
TPH-ORO	224	7

Parameter	Result (mg/kg)	Depth (ft.)
TPH-GRO	6.8	7
TPH-DRO	1,560	7
TPH-ORO	358	7

Parameter	Result (mg/kg)	Depth (ft.)
TPH-GRO	9.4	7
TPH-DRO	2,380	7
TPH-ORO	743	7

Parameter	Result (mg/kg)	Depth (ft.)
TPH-GRO	9.4	7
TPH-DRO	1,520	7
TPH-ORO	426	7

bhate associates
ENGINEERING, SCIENCE AND CONSTRUCTION

SWMU 8 Voluntary Corrective Measures Soil Analytical Data Exceeding NMED Action Levels

PROJECT NO.	SCALE	DATE	DRAWN BY:
9050291	1"=20'	3/17/10	cm
			DRAWING NO: fig_1

SWMU 8 Voluntary Corrective Measures
Holloman AFB, New Mexico

Figure 1

APPENDIX C

NMED CORRESPONDENCE

Appendix C-1

Notice of Deficiency: Voluntary Corrective Measures Work Plan, SWMU 8 Soil Remediation, December 2005 Holloman Air Force Base, EPA ID# NM6572124422 HWB-HAFB-06-002

State of New Mexico
ENVIRONMENT DEPARTMENT
Hazardous Waste Bureau
2905 Rodeo Park Drive East, Building 1
Santa Fe, New Mexico 87505-6303
Telephone (505) 428-2500
Fax (505) 428-2567
www.nmenv.state.nm.us

BILL RICHARDSON
GOVERNOR

RON CURRY
SECRETARY

CERTIFIED MAIL - RETURN RECEIPT REQUESTED

April 14, 2006

Ms. Debbie Hartell
Chief
Environmental Flight
49 CES/CEV
550 Tabosa Ave.
Holloman AFB, NM 88330-8458

SUBJECT: NOTICE OF DEFICIENCY: VOLUNTARY CORRECTIVE MEASURES WORK PLAN, SWMU 8 SOIL REMEDIATION, DECEMBER 2005 HOLLOMAN AIR FORCE BASE, EPA ID# NM6572124422 HWB-HAFB-06-002

Dear Ms. Hartell:

The New Mexico Environment Department (NMED) has reviewed the Holloman Air Force Base (HAFB) document entitled "Voluntary Corrective Measures Work Plan, SWMU 8 Soil Remediation". The following are the deficiencies that HAFB (the Permittee) is required to address before the Work Plan can be approved.

1. <u>General Comment</u>

Based upon review of the subject Work Plan, which included review of applicable portions of the previous Phase I and Phase II remediation reports, the extent of soil and ground water contamination at this site has not been adequately characterized. Therefore, the Permittee is required to conduct additional site characterization activities prior to Phase III soil excavation, as follows:

a) Figure 5 of the Work Plan shows the proposed boundary of the Phase III excavation. However, there is no indication as to how the southwest limit of the excavation was determined, as no soil sampling was conducted in this area. Therefore, the Permittee is required to submit a soil sampling plan as part of the revised Work Plan that will be

required as a result of this Notice. This plan should include a sufficient number of samples to adequately characterize the remaining soil contamination at this site that is not underneath the adjacent structures. NMED understands that soil and ground water conditions under the adjacent structures will be evaluated under a separate Work Plan addendum after the Phase III excavation and sampling is conducted. Soils should be analyzed for volatile organic compounds (VOCs), semi-volatile organic compounds (SVOCs), total petroleum hydrocarbons (TPH), polychlorinated biphenyls (PCBs), and target analyte list (TAL) metals (see Comment No. 6).

b) The Work Plan indicates that ground water at SWMU 8 is found at approximately 10 feet below ground surface. The Work Plan states that contaminated soils will be removed to approximately one (1) foot below the encountered ground water table. Contaminated soil is therefore in contact with ground water. The two previous remediation activities did not include ground water sampling and the proposed VCM does not include ground water sampling.

Therefore, the Permittee is required to submit a ground water sampling plan as part of the revised Work Plan that will be required as a result of this Notice. This shall be done prior to performing the Phase III excavation. The plan must include, at a minimum, the installation of two monitoring wells at the site, which can be temporary wells. One well should be installed within the boundary of the Phase II excavation and the other within the boundary of the proposed Phase III excavation. Ground water should be analyzed for VOCs, SVOCs, TPH, PCBs, TAL Metals and total dissolved solids (TDS).

2. **General Comment**

The Permittee is required to submit documentation regarding the Method Detection Limits of all soil and ground water analytes.

3. **Page 3-1, Section 3, Excavation Procedures, 1st Paragraph, 2nd Sentence**

This sentence states that soils contaminated by hydrocarbons at levels exceeding 880 mg/kg TPH will be removed. Based upon the description of the material released from the oil and water separator provided in Section 1.1.2, which included "oils, detergents and fuels" from an auto hobby shop, these materials are classified as "unknown oil". In accordance with the NMED TPH Screening Guidelines (November 2005), the residential TPH screening guideline for unknown oil is 800 mg/kg. Therefore, the Permittee is required to utilize the 800 mg/kg screening level. All sections of the Work Plan specifying TPH screening levels must be revised to reflect this change.

4. **Page 3-4, Section 3.3.3.1, Soil Screening, 1st Paragraph, 5th Sentence**

This sentence states that soils demonstrating a concentration below 880 (to be 800) mg/kg TPH will be stockpiled for backfill. This sentence must be revised to also state that soil used for backfill shall not have TPH hazardous constituent (e.g., VOCs, SVOCs) concentrations in excess of NMED residential soil screening levels.

5. **Page 3-5, Section 3.3.3.3, Confirmation Soil Sampling, Page 4-2, Section 4.2, Excavation Confirmation Sampling, and Table 3-1**

The Work Plan must be revised to show that, in addition to collecting confirmation samples at a frequency of one per 20 linear feet per sidewall and one per sidewall, a minimum of two soil samples shall be collected from any sidewall greater than 18 feet in length. Also, confirmatory sampling shall be biased to areas with the greatest potential for contamination.

6. **Page 4-1, Section 4.1.3, Laboratory Validation, 1st Sentence**

This sentence indicates that a minimum of one sample per site will be subject to laboratory validation. The Permittee shall be required to collect a minimum of two samples from suspect soil for laboratory validation. In addition, the November 2005 NMED TPH Screening Guidelines require that for sites with unknown oil sources, soil analysis must include VOCs, SVOCs, metals (TAL), and PCBs, as well as TPH. Therefore, the Permittee must revise the soil sampling plan to include laboratory analysis of soils for these parameters.

7. **Table 3-1, Sampling Plan and Related Sections**

Table 3-1 includes a column showing the "Frequency" of sample collection. NMED requires that the following changes be made regarding frequency to Table 3-1 and related sections:

a) During "Field Screening" of suspect soils for field confirmatory purposes, sample every 50 cubic yards (cy), not 100, and for laboratory validation purposes sample every 100 cy, not 300.

b) Sample the "Stock Pile" for backfill characterization every 200 cy, not 500.

8. **Figures 3, 4, and 5**

NMED requires that all site figures include a coordinate system (e.g., UTM, latitude/ longitude) and the boundaries of the site must be shown on the figures. Coordinates of

site boundaries must also be shown. High accuracy (+/-3 ft) GPS coordinates are acceptable. The Permittee is required to resubmit the subject figures satisfying these requirements.

Please respond to this Notice of Deficiency by June 15, 2006. If you have any questions regarding this letter, please contact David Strasser of my staff at (505) 222-9526.

Sincerely,

James P. Bearzi
Chief
Hazardous Waste Bureau

JPB:dcs

cc: J. Kieling, NMED HWB
W. Moats, NMED HWB
C. Amindyas, NMED HWB
D. Strasser, NMED HWB
D. Tellez, EPA, Region 6 (6PD-F)
D. Griffin, HAFB
File: Reading and HAFB 2006

Appendix C-2

Response to Notice of Deficiency: Voluntary Corrective Measures Work Plan, SWMU 8 Soil Remediation, December 2005, Holloman Air Force Base, EPA ID# NM6572124422 HWB-HAFB-06-002

bhate associates
ENGINEERING, SCIENCE AND CONSTRUCTION

445 Union Blvd, Suite 129, Lakewood, CO 80228
303-815-1762 main 303-815-1763 fax www.bhate.com

RESPONSIVENESS – INTEGRITY - TEAMWORK

June 12, 2006

New Mexico Environment Department
Hazardous Waste Bureau
Permits Management Program
2905 Rodeo Park Drive East, Building 1
Santa Fe, NM 87505-6303

Attention: Mr. John E. Kieling
Program Manager

Subject: Response to Notice of Deficiency: Voluntary Corrective Measures Work Plan, SWMU 8 Soil Remediation, December 2005, Holloman Air Force Base, EPA ID# NM6572124422, HWB-HAFB-06-002.

Dear Mr. Kieling,

Enclosed please find tabulated responses to the subject Notice of Deficiency (HWB-HAFB-06-002). Upon verbal or written concurrence from NMED, Bhate will submit the changed pages to NMED.

If you have any questions, please feel free to call me at 303-815-1762.

Sincerely,
Bhate Environmental Associates, Inc.

Frank Gardner, PG
Program Manager

cc w/ encl: C. Amindyas, NMED HWB
D. Strasser, NMED HWB
D. Griffin, HAFB

Voluntary Corrective Measures Work Plan SWMU 08 Soil Remediation, December 2005 Holloman AFB				
Comment No.	Section	Page	Comment	Response
Author	David Strasser		Date of Comments: April 14, 2006, Notice of Deficiency	Date of Response: June 12, 2006
1	General		Based upon review of the subject Work Plan, which included review of applicable portions of the previous Phase I and Phase II remediation reports, the extent of soil and groundwater contamination at this site has not been adequately characterized. Therefore, the Permittee is required to conduct additional site characterization activities prior to Phase III soil excavation as follows: a) Figure 5 of the Work Plan shows the proposed boundary of the Phase III excavation. However, there is no indication as to how the southwest limit of the excavation was determined, as no soil sampling was conducted in this area. Therefore, the Permittee is required to submit a soil sampling plan as part of the revised Work Plan that will be required as a result of this Notice. This plan should include a sufficient number of samples to adequately characterize the remaining soil contamination at this site that is not underneath adjacent structures. NMED understands that soil and groundwater conditions under the adjacent structures will be evaluated under a separate Work Plan addendum after the Phase III excavation and sampling is conducted. Soils should be analyzed for volatile organic compounds (VOCs), semi-volatile organic compounds (SVOCs), total petroleum hydrocarbons, (TPH), polychlorinated biphenyls (PCBSs), and target analyte list (TAL) metals (see Comment No. 6) b) The Work Plan indicates that groundwater at SWMU 8 is found at approximately 10 feet below ground surface. The Work Plan indicates that contaminated soils will be removed to approximately on (1) foot below the encountered ground water table. Contaminated soil is therefore in contact with ground water. The two previous remediation activities did not include ground water sampling and the proposed VCM does	Agreed. Delineation of soil and groundwater contamination at SWMU 08 was carried out in May 22, 2006, using guidance provided in the May 2, 2006, Memorandum Work Plan. The latter was provided and approved by NMED prior to the performance of the characterization. In summary, three groundwater monitoring wells were installed to delineate soil and groundwater conditions within: 1. the formerly excavated area, 2. the area proposed for excavation in the SWMU 08 Soil Remediation Work Plan and, 3. the immediate downgradient area south of Building 232. Although analytical results for soil and groundwater samples collected are not available at this time, they will be used to guide the soil excavation proposed in this work plan. The analyses requested in the NOD were performed on the samples collected on May 22, 2006. Well locations are provided in Figure 1, Attachment 1.

Voluntary Corrective Measures Work Plan SWMU 08 Soil Remediation, December 2005 Holloman AFB				
Comment No.	Section	Page	Comment	Response
Author	David Strasser		Date of Comments: April 14, 2006, Notice of Deficiency	Date of Response: June 12, 2006
			not include ground water sampling. Therefore, the Permittee is required to submit a ground water sampling plan as part of the revised Work Plan that will be required as a result of this Notice. This shall be done prior to performing Phase III excavation. The plan must include, at a minimum, installation of two monitoring wells at the site, which can be temporary wells. One well should be installed within the boundary of the Phase II excavation and the other within the boundary of the proposed Phase III excavation. Ground water should be analyzed for VOCs, SVOCs, TPH, PCBs, TAL Metals and total dissolved solids (TDS).	
2	General		The Permittee is required to submit documentation regarding the Method Detection Limits of all soil and ground water analytes.	Agreed. Table 4-3 has been changed to represent a summary of laboratory quality control criteria to include the method detection limits.
3	Section 3, 1st Para, 2nd sentence	3-1	This sentence states that soils contaminated by hydrocarbons at levels exceeding 880 mg/kg TPH will be removed. Based upon the description of the material released form the oil and water separator provided in Section 1.1.2, which included "oils, detergents and fuels" from an auto hobby shop, these materials are classified as "unknown oil". In accordance with NMED TPH Screening Guidelines (November 2005), the residential TPH screening guideline for unknown oil is 800 mg/kg. Therefore, the Permittee is required to utilize the 800 mg/kg screening level. All sections of the Work Plan specifying TPH screening levels must be revised to reflect this change.	Agreed. The 800 mg/kg TPH standard will be used as the screening level and all relevant sections of the Work Plan will be modified to reflect this change.
4	Section 3.3.3.1, 1st Para, 5th sentence	3-4	This sentence states that soils demonstrating a concentration below 880 (to be 800) mg/kg TPH will be stockpiled for backfill. This sentence must be revised to also state that soil used for backfill shall not have TPH hazardous constituent (e.g. VOCs, SVOC) concentrations in excess of NMED residential screening levels.	The following sentence has been added to the discussion: All soil stockpiled for backfill will undergo laboratory analysis to verify no TPH hazardous constituents (e.g., VOCs, SVOCs) in excess of NMED residential SSLs are present.

Voluntary Corrective Measures Work Plan SWMU 08 Soil Remediation, December 2005 Holloman AFB				
Comment No.	Section	Page	Comment	Response
Author	David Strasser		Date of Comments: April 14, 2006, Notice of Deficiency	Date of Response: June 12, 2006
5	Sections 3.3.3.3 & 4.2 & Table 3-1	3-5 & 4-2	The Work Plan must be revised to show that, in addition to collecting confirmation samples at a frequency of one per 20 linear feet per sidewall, a minimum of two soil samples shall be collected from any sidewall greater than 18 feet in length. Also, confirmatory sampling shall be biased to areas with the greatest potential for contamination.	The affected pages (3-5, 4-2 and Table 3-1) have been modified as follows: Excavation confirmation samples will be collected at a frequency of 2 per 18 linear feet (ln ft) for each side wall at mid-depth of the contamination zone. At a minimum, 1 sample per side wall will be collected for side walls less than 18 ln ft. Also, confirmatory sampling shall be biased to areas with the greatest potential for contamination.
6	Section 4.1.3, 1st sentence	4-2	This sentence indicates that a minimum of one sample per site will be subject to laboratory validation. The Permittee shall be required to collect a minimum of two samples from suspect soil for laboratory validation. In addition, the November 2005 NMED TPH Screening Guidelines require that for sites with unknown soil sources, soil analysis must include VOCs, SVOCs, metals (TAL), and PCBs as well as TPH. Therefore, the Permittee must revise the soil sampling plan to include laboratory anlaysis of soils for these parameters.	Section 4 of the work plan has been streamlined to resonate with the excavation process outlined in Section 3. Essentially, all suspect soil will be treated as contaminated soil and taken to the FT-31 Land farm for treatment. Therefore, sampling of suspect soils is no longer applicable. Table 3-1 has been changed accordingly.
7	Table 3-1		Table 3-1 includes a column showing the "Frequency" of sample collection. NMED requires that the following changes be made regarding frequency to Table 3-1 and related sections: a) During "Field Screening" of suspect soils for field confirmatory purposes, sample every 50 cubic yards (cy), not 100, and for laboratory validation purposes sample every 100 cy, not 300. b) Sample the "Stock Pile" for backfill characterization every 200 cy, not 500.	The requested changes have been made to Table 3-1 with the exception of comment 7a as all suspect soil will be handled as though contaminated and transported to the FT-31 Land farm for treatment. Table 3-1 has been changed to remove all references to suspect soils.
8	Figures 3, 4, and 5		NMED requires that all site figures include a coordinate system (e.g., UTM, latitude/longitude) and the boundaries of the site must be shown on the figures. Coordinates of site boundaries must also be shown. High accuracy (+/- 3 ft) GPS coordinates are acceptable. The	Agreed. Site coordinate information will be added to the indicated figures.

Voluntary Corrective Measures Work Plan SWMU 08 Soil Remediation, December 2005 Holloman AFB				
Comment No.	Section	Page	Comment	Response
Author	David Strasser		Date of Comments: April 14, 2006, Notice of Deficiency	Date of Response: June 12, 2006
			Permittee is required to resubmit the subject figures satisfying these requirements.	
			Response to NOD due by June 15, 2006.	

Appendix C-3

Approval of the Voluntary Corrective Measures Work Plan, SWMU 8 Soil Remediation, December 2005 Holloman Air Force Base, EPA ID# NM6572124422 HWB-HAFB-06-002

State of New Mexico
ENVIRONMENT DEPARTMENT
Hazardous Waste Bureau
2905 Rodeo Park Drive East, Building 1
Santa Fe, New Mexico 87505-6303
Telephone (505) 428-2500
Fax (505) 428-2567
www.nmenv.state.nm.us

BILL RICHARDSON
GOVERNOR

RON CURRY
SECRETARY

CERTIFIED MAIL - RETURN RECEIPT REQUESTED

October 12, 2006

REC'D OCT 17 2006

Ms. Debbie Hartell, Chief
Environmental Flight
49 CES/CEV
550 Tabosa Ave.
Holloman AFB, NM 88330-8458

RE: APPROVAL OF THE VOLUNTARY CORRECTIVE MEASURES WORK PLAN, SWMU 8 SOIL REMEDIATION, DECEMBER 2005
HOLLOMAN AIR FORCE BASE, EPA ID# NM6572124422
HWB-HAFB-06-002

Dear Ms. Hartell:

The New Mexico Environment Department (**NMED**) has reviewed Holloman Air Force Base's (the **Permittee's**) June 12, 2006 response to NMED's April 14, 2006 Notice of Deficiency for the SWMU 8 Voluntary Corrective Measures Work Plan, dated December 2005, for the removal of contaminated soils. The NMED has also reviewed the Technical Memorandum Letter Report for SWMU 8 Soil and Groundwater Sampling and Analysis (**Letter Report**), dated August 2006, which was required to be submitted in response to the Notice of Deficiency.

The NMED hereby concurs with the Response and approves the Work Plan for implementation. The Permittee is now required to submit the changed pages, as indicated in the response, for incorporation into the Work Plan. The NMED also concurs that the soil and groundwater sampling results presented in the Letter Report indicate that the extent of contamination has been adequately defined.

If you have any questions regarding this matter, please contact David Strasser of my staff at (505) 222-9526.

Sincerely,

John E. Kieling
Manager
Permits Management Program

JEK:dcs

cc: J. Bearzi, NMED HWB
W. Moats, NMED HWB
C. Amindyas, NMED HWB
D. Strasser, NMED HWB
D. Tellez, EPA Region 6 (6PD-F)
G. Fish, HAFB
File: HAFB 2006 and Reading
HWB-HAFB-06-002

Appendix C-4

Approval of the Final Submittal: Voluntary Corrective Measures Work Plan, SWMU 8 Soil Remediation, October 21, 2008 Holloman Air Force Base, EPA ID# NM6572124422 HWB-HAFB-06-002

NEW MEXICO
ENVIRONMENT DEPARTMENT

Hazardous Waste Bureau

2905 Rodeo Park Drive East, Building 1
Santa Fe, New Mexico 87505-6303
Phone (505) 476-6000 Fax (505) 476-6030
www.nmenv.state.nm.us

BILL RICHARDSON
Governor

DIANE DENISH
Lieutenant Governor

RON CURRY
Secretary

JON GOLDSTEIN
Deputy Secretary

CERTIFIED MAIL - RETURN RECEIPT REQUESTED

December 11, 2008

12-16-2008 A08:58

Mr. David Scruggs, Chief
Environmental Restoration Program
49 CES/CEVR
550 Tabosa Ave.
Holloman AFB, NM 88330-8458

SUBJECT: APPROVAL OF THE FINAL SUBMITTAL: VOLUNTARY CORRECTIVE MEASURES WORK PLAN, SWMU 8 SOIL REMEDIATION, OCTOBER 21, 2008 HOLLOMAN AIR FORCE BASE, EPA ID# NM6572124422 HWB-HAFB-06-002

Dear Mr. Scruggs:

The New Mexico Environment Department (NMED) has reviewed Holloman Air Force Base's October 21, 2008 submittal of the finalized text, tables and figures for the SWMU 8 Voluntary Corrective Measures Work Plan. This submittal was required pursuant to NMED's October 12, 2006 letter conditionally approving the Work Plan. NMED hereby approves this final submittal.

If you have any questions regarding this matter, please contact David Strasser at (505) 222-9526.

Sincerely,

John E. Kieling
Program Manager
Permits Management Program
Hazardous Waste Bureau

Appendix C-5

Notice of Disapproval: RCRA Facility Investigation Work Plan, SWMU 8, January 2009 Holloman Air Force Base, NM6572124422 HAFB-09-001

NEW MEXICO ENVIRONMENT DEPARTMENT

Hazardous Waste Bureau

BILL RICHARDSON
Governor

DIANE DENISH
Lieutenant Governor

2905 Rodeo Park Drive East, Building 1
Santa Fe, New Mexico 87505-6303
Phone (505) 476-6000 Fax (505) 476-6030
www.nmenv.state.nm.us

RON CURRY
Secretary

JON GOLDSTEIN
Deputy Secretary

CERTIFIED MAIL - RETURN RECEIPT REQUESTED

August 31, 2009

Mr. David Scruggs, Chief
Environmental Restoration Program
49 CES/CEVR
550 Tabosa Ave.
Holloman AFB, NM 88330-8458

09-03-2009 A09:31

SUBJECT: NOTICE OF DISAPPROVAL: RCRA FACILITY INVESTIGATION WORK PLAN, SWMU 8, JANUARY 2009 HOLLOMAN AIR FORCE BASE, NM6572124422 HAFB-09-001

Dear Mr. Scruggs:

The New Mexico Environment Department (NMED) has reviewed the RCRA Facility Investigation Work Plan for Solid Waste Management Unit (SWMU) 8, which was submitted for the performance of additional site characterization at this site by Holloman Air Force Base (the Permittee). The Work Plan cannot be approved at this time, as revisions are necessary. The Permittee is required to address the following deficiencies before the NMED can make a final determination regarding approval.

GENERAL COMMENTS

1. The Permittee must submit a new figure(s) showing the locations of all existing and former soil borings and monitoring wells and the results and dates of analyses that were/are above relevant and applicable soil and groundwater action levels. This figure, or a separate figure if appropriate, must also show the current direction of groundwater flow. Section 2.7 of the Work Plan stated that September 2008 groundwater elevations indicated groundwater flow direction to the northwest. In

July 2006, the groundwater flow was found to be to the west-southwest. NMED cannot approve the location of the proposed monitoring wells without knowing the current and anticipated direction of groundwater flow.

2. The Permittee must revise Figures 1-1, 1-2, 1-3, 6-1, 6-2, 6-3 and 6-4 to show which datum projection was used (e.g., New Mexico State Plane Coordinate System, Central Zone, 1983 [ft]).

3. The Permittee must revise the Work Plan to include evaluation of inorganic constituents detected in soil above the reporting limit against the soon-to-be established base-wide background concentrations. Pursuant to the recently revised NMED Soil Screening Guidance (August, 2009), the maximum detected concentration for each contaminant that is detected above the reporting limit must be used. In the event that the maximum detected concentration exceeds the background reference datum, a statistical comparison of the data populations may be conducted.

   The Permittee must also provide a detailed description of the procedures to be followed for any risk assessments (human health and ecological) to be performed. This includes a detailed site conceptual model, how constituents of concern will be selected, how exposure point concentrations will be determined, and exposure methodologies. In addition, an ecological scoping survey following NMED guidance must be conducted and provided to support the ecological risk assessment.

   In past investigations, concentrations detected in soil were compared to the 2006 NMED soil screening levels (SSLs). Please note that NMED has revised the SSLs and for all future evaluations, the 2009 SSLs must be applied. In the event that a constituent is not included in the NMED SSL tables, data from the Environmental Protection Agency (EPA) Region 6 Regional Screening Level (RSLs) tables may be applied.

4. The Permittee must provide a table showing all analyte holding times.

SPECIFIC COMMENTS

5. **Page 6-4, Section 6.2.1.1, 1st Sentence and Page 10-3, Section 10, References**

   As described in Comment #3 above, the NMED SSLs were revised effective in August 2009. The Permittee must revise this sentence and the reference to reflect that the revised SSLs will be used as action levels for the proposed activities.

6. **Page 6-4, Section 6.2.1.2**

   This section indicates that data from indoor air and soil vapor sampling will be compared to residential allowable indoor inhalation levels included in the New

Mexico *Underground Storage Tank Bureau Guidelines for Corrective Action* (NMED, 2000). There are several concerns with the use of screening data in this guidance. One of the primary concerns is that the toxicological data used to derive the screening data are out of date for several of the constituents. Another concern is that the equations do not incorporate the EPA recommended methodologies for the inhalation pathway as outlined in the *Risk Assessment Guidance for Superfund Volume I Human Health Evaluation Manual (Part F, Supplemental Guidance for Inhalation Risk Assessment)* (January 2009, OSWER 9285.7-82). Under previous guidance, inhalation reference doses and slope factors were combined with specific inhalation rates and body weight to determine screening data. Under current guidance, reference concentrations and inhalation unit risk factors are applied and body weight and inhalation rates are no longer required. In order to be consistent with current guidance, including New Mexico Guidance for RCRA corrective action, data collected from indoor air should either be compared to RSL data for residential air or calculated following UST guidance using updated methodologies and toxicological data. As an example, the screening level for naphthalene (which has been detected at the site) from the UST guidance (Table 4-17) is 62.5 $\mu g/m^3$ air. Due mostly to updates in toxicological data, the RSL datum for naphthalene is now 7.2E-02 $\mu g/m^3$ air (adjusted to a 1E-05 risk is 7.2E-01 $\mu g/m^3$). The Permittee must revise this section accordingly.

Data from soil vapor sampling shall be evaluated using EPA's Johnson and Ettinger model. Note that the model shall only be used to assess concentrations. As the model has not been revised to incorporate current toxicological data, the risk determinations shall not be used from the model. The resulting concentrations from the model shall be used with current toxicological data to determine overall risk/hazard. The Permittee must revise this section accordingly.

7. **Page 6-12, Section 6.3.4, 1st Paragraph, 2nd Sentence**

This sentence states that a peristaltic pump will be used to collect groundwater samples. NMED notes that volatile organic compounds (VOCs) are part of the suite of analytes of interest. The Permittee is advised that the use of a peristaltic pump to collect VOC samples is not permitted as degassing of the VOCs could occur. An alternate method of sampling groundwater (e.g., bailing or low flow submersible pump) for VOCs must be proposed in the response to this Notice of Disapproval (NOD). In addition, the Permittee must provide assurance that a minimum of 3-5 well volumes will be purged from each well prior to sampling.

8. **Page 6-16, Section 6.3.6, 1st Paragraph, 4th Full Sentence, Page 6-18, Section 6.3.6, 1st Paragraph, 2nd Full Sentence, and Page 6-19, Section 6.3.7, 2nd Paragraph, 4th Sentence**

These sentences indicate that the subject forms are located in Appendix C of the

Work Plan. These forms are actually located in Appendix E. These sentences must be revised to reflect this change.

9. **Page 6-18, Section 6.3.7**

This section indicates that the purpose of the indoor air sampling is to determine ambient levels of contaminants in air that are not related to releases from SWMU 8. There is some confusion regarding the potential presence of contaminants under or near the buildings. Section 5.2 states that a goal of the Work Plan is to close data gaps with regard to soil and groundwater contamination below Buildings 231 and 232. If there is a potential that contaminated soil and/or groundwater is present underneath or near the foundations of either Building 231 or 232, the indoor air sampling would most likely include detections of constituents related to SWMU 8. The Permittee must clarify how a determination can be made that the results of the indoor air sampling are not influenced by contamination associated with SWMU 8.

Another concern with the indoor air sampling is that only one sample in each building is proposed. It is unclear how any determination can be made based on a single data point, especially taking into account the multitude of uncertainties and influencing parameters on indoor air samples. The Permittee must clarify how the results from the one sample will be evaluated and compared to other data.

10. **Page 6-19, Section 6.3.7, 2nd Paragraph, 2nd Sentence**

Regarding completion of the Air Quality Questionnaire and Building Inventory Form, this sentence states that "Questions on this form will be asked to the senior or most qualified employee present within the building at the time sampling is to occur." The Permittee must revise this sentence to state that the most qualified employee will be questioned, even if that person has to be summoned.

11. **Appendix A, Basewide QAPP Addendum, Table 4-4**

This Table indicates that the soil-vapor reporting limits (RLs) for the following constituents are higher than the residential risk-based screening level (RBSL), as shown below:

CONSTITUENT	RL ($\mu g/m^3$)	RBSL ($\mu g/m^3$)
Benzene	5	2.66
1,2-Dibromoethane	5	0.146
1,2-Dichloroethane	5	1.23

The Permittee must provide evidence that changes will be made to ensure that these RLs will be lower than the RBSLs.

Submit the required information in the form of a revised Work Plan that incorporates all the responses to this NOD, indicating added information in highlights, and deleted information in strikeouts, and on CDs compatible with Microsoft Word. Further, in order to expedite review of the responses, provide a matrix of the comments and HAFB responses. The response must be provided by October 30, 2009.

If you have any questions regarding this NOD or if you would like to discuss the comments prior to your response, please contact David Strasser of my staff at (505) 222-9526, or at the above address.

Sincerely,

James P. Bearzi
Chief
Hazardous Waste Bureau

cc: J. Kieling, NMED HWB
W. Moats, NMED HWB
C. Amindyas, NMED HWB
D. Strasser, NMED HWB
L. King, EPA, Region 6 (6PD-F)
File: HAFB 2009 and Reading
HWB-HAFB-09-001

Appendix C-6

Response to Notice of Disapproval: RCRA Facility Investigation Work Plan, SWMU 8, January 2009 Holloman Air Force Base, NM6572124422 HAFB-09-001

Response to Comments Final RCRA Facility Investigation Work Plan SWMU 8 Holloman Air Force Base, New Mexico, January 2009				
Comment No.	**Section**	**Page**	**Comment**	**Response**
Author: David Strasser			**Date of Comments: August 31, 2009**	**Date of Response: March 18, 2010**
1	General		The Permittee must submit a new figure(s) showing the locations of all existing and former soil borings and monitoring wells and the results and dates of analyses that were/are above relevant and applicable soil and groundwater action levels. This figure, or a separate figure if appropriate, must also show the current direction of groundwater flow. Section 2.7 of the Work Plan stated that September 2008 groundwater elevations indicated groundwater flow direction to the northwest. In July 2006, the groundwater flow was found to be to the west-southwest. NMED cannot approve the location of the proposed monitoring wells without knowing the current and anticipated direction of groundwater flow.	Three new figures (Figures 1-4 through 1-6) have been created. The new figures show the location and dates of all previous excavation soil samples and monitoring wells along with the results of analyses that were above current soil and groundwater action levels (e.g., NMED Residential Soil Screening Levels [SSLs] {NMED, 2009}, NMED Total Petroleum Hydrocarbon [TPH] Screening Guidelines {NMED, 2006}, NMWQCC Groundwater Standards [New Mexico Administrative Code {NMAC} 20.6.2.3103], USEPA Regional Screening Levels [RSLs] {USEPA, 2009b}, and USEPA Maximum Contaminant Levels [MCLs] {USEPA, 2009a}) from the previous SWMU 8 excavations and soil/groundwater investigations. These new figures have been introduced into the Work Plan text within Sections 1.9.2, 1.9.5.2, and 1.9.6 respectively. A fourth new figure (Fig 2-5) illustrates the current groundwater flow direction, based on September 30, 2009, depth to water measurements. Monitoring well top of casing re-survey data has also been added to the revised Work Plan in Table 2-2. Table 2-2 contains elevation data used to generate the potentiometric surface shown on Figure 2-5. Figure 2-5 and Table 2-2 are introduced within Section 2.7 of the revised Work Plan. Current groundwater flow direction at SWMU 8 is to the south-southwest which is consistent with the Basewide flow pattern.

Response to Comments Final RCRA Facility Investigation Work Plan SWMU 8 Holloman Air Force Base, New Mexico, January 2009				
Comment No.	**Section**	**Page**	**Comment**	**Response**
				In the past, artificially elevated groundwater elevations (groundwater mounding) due to leaking underground water supply lines, has been documented at SWMU 8. Interviews with Building 232 personnel in 2006 indicated that two sink holes had developed along Connecticut Avenue (east side of Building 232) approximately 6 to 8 months prior to the SWMU 8 Additional Characterization fieldwork that was performed by Bhate in 2006. Artificially elevated groundwater was measured in monitoring well SWMU-8-DP01 in 2006 and 2008. This artificially inflated groundwater elevation in monitoring well SWMU-8-DP01 has altered previous potentiometric surface maps to show groundwater flow direction to the west-southwest (2006) and northwest (2008). Groundwater mounding in the vicinity of SWMU 8 due to leaking water supply lines is no longer impacting the depth to groundwater and flow direction. The depth to groundwater in monitoring well SWMU-8-DP01 has subsided. Onsite localized flow direction has stabilized and is consistent with the Basewide flow pattern in the area (south-southwest).
2	General		The Permittee must revise Figures 1-1, 1-2, 1-3, 6-1, 6-2, 6-3 and 6-4 to show which datum projection was used (e.g., New Mexico State Plane Coordinate System, Central Zone, 1983 [ft]).	All Figures have been revised to show which datum projection was used (New Mexico State Plane Coordinate System, Central Zone, 1983 [feet]).

Response to Comments Final RCRA Facility Investigation Work Plan SWMU 8 Holloman Air Force Base, New Mexico, January 2009				
Comment No.	**Section**	**Page**	**Comment**	**Response**
3	General		The Permittee must revise the Work Plan to include evaluation of inorganic constituents detected in soil above the reporting limit against the soon-to-be established base-wide background concentrations. Pursuant to the recently revised NMED Soil Screening Guidance (August, 2009), the maximum detected concentration for each contaminant that is detected above the reporting limit must be used. In the event that the maximum detected concentration exceeds the background reference datum, a statistical comparison of the data populations may be conducted. The Permittee must also provide a detailed description of the procedures to be followed for any risk assessments (human health and ecological) to be performed. This includes a detailed site conceptual model, how constituents of concern will be selected, how exposure point concentrations will be determined, and exposure methodologies. In addition, an ecological scoping survey following NMED guidance must be conducted and provided to support the ecological risk assessment. In past investigations, concentrations detected in soil were compared to the 2006 NMED soil screening levels (SSLs). Please note that NMED has revised the SSLs and for all future evaluations, the 2009 SSLs must be applied. In the event that a constituent is not included in the NMED SSL tables, data from the Environmental Protection Agency (EPA) Region 6 Regional Screening Level (RSLs) tables may be applied.	A new Section (1.7) has been created which outlines the Applicable Screening Criteria, by sample matrix (soil and groundwater), for the SWMU 8 RFI. All inorganic constituents (e.g., metals) detected in the soil samples will also be compared to the HAFB Background, Combined Soil, Upper Tolerance Limits (UTLs) (pending NMED approval of the *Basewide Background Study Report, Holloman Air Force Base, New Mexico* [NationView|Bhate JV III, October 2009]). Additionally, all detected metals in groundwater samples will be compared to their respective HAFB Background, Dissolved Metals, Groundwater UTLs (pending NMED approval of the *Basewide Background Study Report, Holloman Air Force Base, New Mexico* [NationView|Bhate JV III, October 2009]). The following text has been added to the beginning of Section 1.7. "The maximum detected concentration of each contaminant which is detected above the reporting limit will be used. In the event that the maximum concentration of a contaminant exceeds the background reference datum (pending NMED approval of the *Basewide Background Study Report, Holloman Air Force Base, New Mexico* [NationView|Bhate JV III, 2009], a statistical comparison of the data populations may be conducted." The Work Plan has been revised to include a <u>Risk Assessment Approach</u> Section (new Section 7) which provides a detailed

Response to Comments Final RCRA Facility Investigation Work Plan SWMU 8 Holloman Air Force Base, New Mexico, January 2009				
Comment No.	**Section**	**Page**	**Comment**	**Response**
				explanation of the approach to be used for conducting a human health risk assessment. An outline of Section 7 appears below: • Section 7.1 – Compilation of Data • Section 7.2 – Identification of COPCs • Section 7.3 – Development of the Exposure Model • Section 7.4 – Identification of Target Levels • Section 7.5 – Calculation of Representative Concentrations • Section 7.6 – Calculation of Risk Ratios • Section 7.7 – Uncertainty Analysis Refer to the revised Final SWMU 8 RFI Work Plan (NationView, March 2010) for the specific contents of each sub-section. The non-human (biological) potential receptors that are referenced in Section 4.4 of the Work Plan are receptors that are located within the entire HAFB installation boundary (60,000 acres) and were not meant to be specific non-human receptors for the SWMU 8 site. As a result the first sentence in Section 4 has been revised to read: "This section identifies and describes potential receptors (human and biological) and environmental systems that have been found within the entire HAFB installation boundary (approximately 60,000 acres) as well as the potential human receptors at SWMU 8." The following text has been added after the first sentence in Section 4.4: "SWMU 8 is located in an area of HAFB that is classified as industrial. Additionally, there are no ecological habitats that are located in or adjacent to this SWMU. The NMED has developed a tiered procedure for the evaluation

Response to Comments Final RCRA Facility Investigation Work Plan SWMU 8 Holloman Air Force Base, New Mexico, January 2009				
Comment No.	**Section**	**Page**	**Comment**	**Response**
				of ecological risk (*Guidance for Assessing Ecological Risk Posed by Chemicals [GAERPC]: Screening-Level Ecological Risk Assessment*, NMED 2008). The Scoping Assessment, which includes a Site Assessment Checklist, is the first phase of the process as defined in the GAERPC. SWMU 8 is located within the main base at HAFB that is classified as industrial. As per the Site Assessment Checklist, there are no habitats (wetlands, aquatic, terrestrial, wooded, shrub, grassland, and/or desert) that are in or adjacent to the site. Therefore, an ecological risk assessment is not warranted for SWMU 8." The residential SSLs established in NMED's *Technical Background Document for Development of Soil Screening Levels, Revision 5.0* (NMED, 2009) will now be used as the action levels for detections of VOCs, SVOCs, PCBs, and TAL metals that are detected in soil samples. For constituents with no established NMED residential SSL, the USEPA Region 6 RSL (USEPA, December 2009) will be used as the action level. In addition, all metals detected in the soil samples will be compared to the HAFB Background, Combined Soil, UTLs (pending NMED approval of the *Basewide Background Study Report, Holloman Air Force Base, New Mexico* [NationView|Bhate JV III, October 2009]).
4	General		The Permittee must provide a table showing all analyte holding times.	Table 6-3 has been revised to include analyte holding times for soil and groundwater samples collected during the SWMU 8 RFI.

Response to Comments Final RCRA Facility Investigation Work Plan SWMU 8 Holloman Air Force Base, New Mexico, January 2009				
Comment No.	**Section**	**Page**	**Comment**	**Response**
5	6.2.1.1	6-4	**Page 6-4, Section 6.2.1.1, 1st Sentence and Page 10-3, Section 10, References** As described in Comment #3 above, the NMED SSLs were revised effective in August 2009. The Permittee must revise this sentence and the reference to reflect that the revised SSLs will be used as action levels for the proposed activities.	Previous Section 6.2.1.1 has been revised into a new Section 1.7.1 (Applicable Screening Criteria - Soil). This sentence, along with all other references to NMED SSLs within the document text, tables, and figures, have been revised to reflect the new NMED Residential SSLs (Rev 5.0, December 2009).
6	6.2.1.2	6-4	**Page 6-4, Section 6.2.1.2** This section indicates that data from indoor air and soil vapor sampling will be compared to residential allowable indoor inhalation levels included in the New Mexico *Underground Storage Tank Bureau Guidelines for Corrective Action* (NMED, 2000). There are several concerns with the use of screening data in this guidance. One of the primary concerns is that the toxicological data used to derive the screening data are out of date for several of the constituents. Another concern is that the equations do not incorporate the EPA recommended methodologies for the inhalation pathway as outlined in the *Risk Assessment Guidance for Superfund Volume I Human Health Evaluation Manual (Part F, Supplemental Guidance for Inhalation Risk Assessment)* (January 2009, OSWER 9285.7-82). Under previous guidance, inhalation reference doses and slope factors were combined with specific inhalation rates and body weight to determine screening data. Under current guidance, reference concentrations and inhalation unit risk factors are applied and body weight and inhalation rates are no longer required. In order to be consistent with current guidance, including New Mexico Guidance for RCRA corrective action, data collected from indoor air should either be compared to RSL data for residential air or calculated following UST guidance using updated methodologies and toxicological data. As an example, the screening level for naphthalene (which has been detected at the site) from the UST guidance (Table 4-17) is 62.5 $\mu g/m^3$ air. Due mostly to updates in toxicological data, the RSL datum for naphthalene is now 7.2E-02 $\mu g/m^3$ air (adjusted to a 1E-05 risk is 7.2E-01 $\mu g/m^3$). The Permittee must revise this section accordingly.	Indoor air and soil-vapor sampling are no longer going to be performed during the SWMU 8 RFI. Soil data from samples collected during the SWMU 8 Voluntary Corrective Measures (VCM) performed by Bhate in late 2008 was not available when the SWMU 8 RFI Work Plan was first written. This soil data has been introduced in a revised Appendix B-5 of this Work Plan. Based on the data collected during the 2008 VCM excavation, the only contaminant in soil detected above NMED and/or USEPA action levels was TPH. TPH was analyzed for Gasoline Range Organics (GRO), Diesel Range Organics (DRO), and Oil Range Organics (ORO). TPH-GRO detections ranged from 5.3 milligrams per kilogram (mg/kg) to 12 mg/kg. TPH-DRO detections ranged from 0.55J mg/kg to 2,380 mg/kg. TPH-ORO detections ranged from 2.1J mg/kg to 743 mg/kg. The combined TPH (GRO/DRO/ORO) concentrations exceeded the NMED TPH Screening Guideline for unknown oil (800 mg/kg) (NMED, 2006) in 8 out of 17 excavation sidewall samples. No VOCs, SVOCs, PCBs, or TAL metals were

Response to Comments Final RCRA Facility Investigation Work Plan SWMU 8 Holloman Air Force Base, New Mexico, January 2009				
Comment No.	**Section**	**Page**	**Comment**	**Response**
			Data from soil vapor sampling shall be evaluated using EPA's Johnson and Ettinger model. Note that the model shall only be used to assess concentrations. As the model has not been revised to incorporate current toxicological data, the risk determinations shall not be used from the model. The resulting concentrations from the model shall be used with current toxicological data to determine overall risk/hazard. The Permittee must revise this section accordingly.	detected above NMED SSLs (NMED, 2009) and/or USEPA RSLs (USEPA, 2009b) in any of the soil samples collected. Due to the absence of VOC concentrations above NMED SSLs and/or USEPA RSLs in all 2008 VCM sidewall samples, along with the absence of free-phase product in groundwater, indoor air and sub-slab soil-vapor sampling will not be necessary to support Risk-Based closure of SWMU 8. Therefore, indoor air and sub-slab vapor sampling has been removed from the revised Work Plan. The application of the Johnson & Ettinger (J&E) model for evaluating soil-vapor data will no longer be necessary due to all indoor air and soil-vapor sampling being removed from the revised Work Plan. However, the J&E model will be utilized to develop the target levels for the indoor inhalation of vapors from subsurface soil and groundwater samples. When the J&E model is used to evaluate the indoor inhalation pathway, the most current inhalation toxicity values (unit risk factor for carcinogens and reference concentrations for non-carcinogens) and physical chemical properties will be used. The sources of toxicity values are listed in Section 7.4.1 of the revised Final SWMU 8 RFI Work Plan (NationView, March 2010).

Response to Comments Final RCRA Facility Investigation Work Plan SWMU 8 Holloman Air Force Base, New Mexico, January 2009				
Comment No.	**Section**	**Page**	**Comment**	**Response**
7	6.3.4	6-12	**Page 6-12, Section 6.3.4, 1st Paragraph, 2nd Sentence** This sentence states that a peristaltic pump will be used to collect groundwater samples. NMED notes that volatile organic compounds (VOCs) are part of the suite of analytes of interest. The Permittee is advised that the use of a peristaltic pump to collect VOC samples is not permitted as degassing of the VOCs could occur. An alternate method of sampling groundwater (e.g., bailing or low flow submersible pump) for VOCs must be proposed in the response to this Notice of Disapproval (NOD). In addition, the Permittee must provide assurance that a minimum of 3-5 well volumes will be purged from each well prior to sampling.	Section 6.3.4 has been revised to include the collection of groundwater samples for VOC analysis with a Teflon® bailer and to provide assurance that a minimum of 3 well volumes will be purged from each well prior to sample collection.
8	6.3.6, 6.3.7	6-16, 6-18, 6-19	**Page 6-16, Section 6.3.6, 1st Paragraph, 4th Full Sentence, Page 6-18, Section 6.3.6, 1st Paragraph, 2nd Full Sentence, and Page 6-19, Section 6.3.7, 2nd Paragraph, 4th Sentence** These sentences indicate that the subject forms are located in Appendix C of the Work Plan. These forms are actually located in Appendix E. These sentences must be revised to reflect this change.	All indoor air and soil-vapor sampling has been removed from the revised Work Plan as VOCs have not been historically detected above NMED or USEPA action levels at SWMU 8 (see response to comment #6). All associated air sampling field forms which were in this Attachment are no longer included within the revised Work Plan.
9			**Page 6-18, Section 6.3.7** This section indicates that the purpose of the indoor air sampling is to determine ambient levels of contaminants in air that are not related to releases from SWMU 8. There is some confusion regarding the potential presence of contaminants under or near the buildings. Section 5.2 states that a goal of the Work Plan is to close data gaps with regard to soil and groundwater contamination below Buildings 231 and 232. If there is a potential that contaminated soil and/or groundwater is present underneath or near the foundations of either Building 231 or 232, the indoor air sampling would most likely include detections of constituents related to SWMU 8. The Permittee must clarify how a determination can be made that the results of the indoor air sampling are not influenced by contamination associated with SWMU 8. Another concern with the indoor air sampling is that only one sample in each building is proposed. It is unclear how any determination can be made based on a single data point, especially taking into account the multitude of uncertainties and influencing parameters on indoor air samples. The Permittee must clarify how the results from the one sample will be evaluated and compared to other data.	All indoor air and soil-vapor sampling has been removed from the revised Work Plan as VOCs have not been previously detected above NMED or USEPA action levels at SWMU 8 (see response to comment #6).

<table>
<tr><th colspan="5">Response to Comments
Final RCRA Facility Investigation Work Plan SWMU 8
Holloman Air Force Base, New Mexico, January 2009</th></tr>
<tr><th>Comment No.</th><th>Section</th><th>Page</th><th>Comment</th><th>Response</th></tr>
<tr><td>10</td><td>6.3.7</td><td>6-19</td><td><u>Page 6-19, Section 6.3.7, 2nd Paragraph, 2nd Sentence</u>

Regarding completion of the Air Quality Questionnaire and Building Inventory Form, this sentence states that “Questions on this form will be asked to the senior or most qualified employee present within the building at the time sampling is to occur.” The Permittee must revise this sentence to state that the most qualified employee will be questioned, even if that person has to be summoned.</td><td>All indoor air and soil-vapor sampling have been removed from the revised Work Plan as VOCs have not been previously detected above NMED or USEPA action levels at SWMU 8 (see response to comment #6). The Indoor Air Quality Questionnaire and Building Inventory form has been removed from the revised Work Plan.</td></tr>
<tr><td>11</td><td>Appendix A</td><td>Table 4-4</td><td><u>Appendix A, Basewide QAPP Addendum, Table 4-4</u>

This Table indicates that the soil-vapor reporting limits (RLs) for the following constituents are higher than the residential risk-based screening level (RBSL), as shown below:

<table><tr><th>CONSTITUENT</th><th>RL (µg/m^3)</th><th>RBSL (µg/m^3)</th></tr><tr><td>Benzene</td><td>5</td><td>2.66</td></tr><tr><td>1,2-Dibromoethane</td><td>5</td><td>0.146</td></tr><tr><td>1,2-Dichloroethane</td><td>5</td><td>1.23</td></tr></table>
The Permittee must provide evidence that changes will be made to ensure that these RLs will be lower than the RBSLs.</td><td>All indoor air sampling and soil-vapor sampling have been removed from the revised Work Plan as VOCs have not been previously detected above NMED and USEPA action levels at SWMU 8 (see response to comment #6). Table 4-4, and all other tables, field forms, and standard operating procedures (SOPs) which pertained to indoor air and soil-vapor sampling have also been removed from the revised Work Plan.</td></tr>
</table>

APPENDIX D

SITE-SPECIFIC ADDENDUM TO THE BASEWIDE HEALTH AND SAFETY PLAN

SITE-SPECIFIC ADDENDUM TO THE BASEWIDE HEALTH AND SAFETY PLAN

SWMU 8
RCRA FACILITY INVESTIGATION
HOLLOMAN AIR FORCE BASE, NEW MEXICO

Prepared for:

49 CES/CEA
Holloman Air Force Base
New Mexico

Under Contract to:

U.S. Army Corps of Engineers-
Albuquerque District
HTRW Branch
4101 Jefferson Plaza NE
Albuquerque, New Mexico 87109-3435
USACE Albuquerque District Project No. KWRD076044

Prepared by:

NationView, LLC
1608 13th Avenue South, Suite 160
Birmingham, Alabama 35205
NationView Project No. 8080014.03

Contract No. W912PL-07-D-0050
Delivery Order No. DM01

~~January 2009~~March 2010

This page intentionally left blank.

SITE-SPECIFIC ADDENDUM TO THE BASEWIDE HEALTH AND SAFETY PLAN

SWMU 8 RCRA FACILITY INVESTIGATION HOLLOMAN AIR FORCE BASE, NEW MEXICO

TABLE OF CONTENTS

Acronyms and Abbreviations iii

1 Project Safety Coordination 1-1

2 Project Background and Scope 2-1

3 Hazard Assessment and Controls 3-1

3.1 Task Hazard(s) Summary 3-1
3.2 Hazard Control Measures 3-2
3.3 Written Safety Procedures and Programs 3-2
3.4 Permits 3-3

4 Personal Protective Equipment 4-1

4.1 Purpose 4-1
4.2 Scope 4-1

5 Site Monitoring 5-1

6 Site Control 6-1

6.1 Site Activities 6-1
6.2 Decontamination 6-2

7 Communications 7-1

8 Medical Surveillance and Training 8-1

9 Hazardous Chemicals 9-1

10 Emergency Action and Response 10-1

11 Emergency Contacts 11-1

12 Hospital Directions 12-1

13 References 13-1

Tables

Table 1-1. Project Team Members with Project Health and Safety Responsibilities 1-1
Table 3-1. Task Hazards Summary.....3-1
Table 3-2. Written Safety Procedures and Programs.....3-2
Table 4-1. Personal Protective Equipment by Activity.....4-1
Table 5-1. Direct Reading Exposure Monitoring.....5-1
Table 6-1. Site Control for General Work Area(s).....6-1
Table 6-2. Site Control for Potentially Contaminated Area(s).....6-1
Table 6-3. Decontamination Procedures by Location.....6-1
Table 8-1 Required Worker Training and Site-Specific Training.....8-1
Table 9-1 Hazardous Chemicals Brought On-Site..... 9-1
Table 10-1. Emergency Coordinator and Alternate.....10-1
Table 10-2. Evacuation Procedures.....10-1
Table 10-3. Potential Emergency Situations.....10-2

Figures

Figure 12-1. Hospital Route Map 12-2

Attachments

A - Activity Hazards Analysis

B - Primary Contaminants of Concern

ACRONYMS AND ABBREVIATIONS

AF Fm	Air Force Form
AHA	Activity Hazard Analysis
ANSI	American National Standards Institute
Bhate	Bhate Environmental Associates, Inc.
CES/CEA	Civil Engineering Squadron/Civil Engineering Asset Management Flight
CFR	Code of Federal Regulations
CHMM	Certified Hazardous Materials Manager
CIH	Certified Industrial Hygienist
CPEA	Certified Professional Environmental Auditor
CPR	Cardiopulmonary Resuscitation
CRZ	Contamination Reduction Zone
CSP	Certified Safety Professional
dBA	Decibels A-weighted
DOT	Department of Transportation
DPT	Direct push technology
DQO	Data Quality Objective
EM	Engineering Manual
EZ	Exclusion Zone
HAFB	Holloman Air Force Base
HASP	Health and Safety Plan
HEPA	High Efficiency Particulate Air
HSM	Health and Safety Manager
L	Liter(s)
LEL	Lower explosive limit
mg/m^3	Milligrams per cubic meter
MHS	Master of Health and Science
mL	Milliliter(s)
MSDS	Material Safety Data Sheet
MUTCD	Manual on Uniform Traffic Control Devices
NFA	No Further Action
NIOSH	National Institute for Occupational Safety and Health
NMED	New Mexico Environment Department
NRR	Noise Reduction Rating
OSHA	Occupational Safety and Health Administration
OV	Organic Vapor
PAPR	Powered Air Purifying Respirator
PCBs	Polychlorinated biphenyls
PEL	Permissible exposure limit
P.G.	Professional Geologist
PID	Photoionization Detector
PM	Project Manager
POL	Petroleum Oil Lubricants

ACRONYMS AND ABBREVIATIONS (CONTINUED)

PPE	Personal protective equipment
ppm	Parts per million
RCRA	Resource Conservation and Recovery Act
RFI	RCRA Facility Investigation
SCBA	Self Contained Breathing Apparatus
SPF	Sun protection factor
SSA	Site-Specific Addendum
SSHO	Site Safety and Health Officer
SVOCs	Semi-volatile organic compounds
SWMU	Solid Waste Management Unit
SZ	Support Zone
TAL	Target Analyte List
TWA	Time weighted average
USACE	U.S. Army Corps of Engineers
VOC	Volatile organic compound

1 PROJECT SAFETY COORDINATION

The NationView personnel who are responsible for safety and health issues during the implementation of the Solid Waste Management Unit (SWMU) 8 Resource Conservation and Recovery Act (RCRA) Facility Investigation (RFI)~~at the solid waste management unit (SWMU) 8 project site are~~ identified in Table 1-1. The respective personnel shall have reviewed and approved this Site-Specific Addendum to the Basewide Health and Safety Plan (HASP) submitted by NationView, LLC for implementation on this scope of work prior to the start of field operations. The requirements of this site-specific addendum are applicable to NationView employees, their subcontractors, and site visitors.

Table 1-1. Project Team Members with Project Health and Safety Responsibilities

Title	Name	Telephone
Corporate Sponsor	Mr. David D. Martin	(205) 908-0731
Project Manager	Mr. Frank Gardner, P.G.	(303) 386-6454
Field Team Leader/ Senior Geologist	Mr. Jim Moore, P.G.	(303) 929-4840
Project Geologist~~/Site Safety and Health Officer~~	Mr. Dustin McNeil, P.G.	(303) 895-1963
Environmental Specialist	Mr. Tony Lucero	(575) 921-1899
Site Safety and Health Officer	Mr. John Hymer	(575) 491-9171
Health and Safety Manager	Ms. Sally S. Smith, MHS, CIH, CHMM, CSP, CPEA ~~Mr. Brian Muller, CIH, CSP, CHMM~~	(205) 918-4032

P.G. = Professional Geologist
MHS = Master of Health Science
CIH = Certified Industrial Hygienist
CSP = Certified Safety Professional
CHMM = Certified Hazardous Materials Manager
CPEA = Certified Professional Environmental Auditor

This page intentionally left blank.

2 PROJECT BACKGROUND AND SCOPE

Over a period of years SWMU 8 (Building 231 Oil/Water Separator) received wash water from a heavy equipment wash rack located adjacent to the unit. During that time, various oils, detergents, and fuels have been released through deteriorating lines or spills, and migrated, contaminating soils in the area of the oil/water separator. Prior excavations have removed ~~a large amount of source area soil contamination, but were halted due the close proximity of Buildings 231 and 232, and a walkway connecting the two buildings~~all petroleum contaminated soil which does not lie beneath Buildings 231 and 232. For further details in regards to the historical characterization data and chronology of previous investigations please refer to Section 1.9 of the *RCRA Facility Investigation Work Plan SWMU 8 Holloman Air Force Base, New Mexico* (NationView, 20~~09~~10).

The RFI Work Plan will serve as the primary document for the SWMU 8 site investigation. The primary objectives of the SWMU 8 RFI~~this Resource Conservation and Recovery Act (RCRA) Facility Investigation (RFI)~~ are to:

1. Collect soil samples from below Building 231 and Building 232 to determine the nature and extent of soil contamination beneath these structures.

~~2.Perform soil vapor sampling below Building 231 and Building 232, and indoor air sampling within these buildings, to assess the potential for migration of hydrocarbons into indoor air from the soil.~~

~~3.~~2. Install additional monitoring wells to determine the nature and extent of groundwater contamination underneath Buildings 231 and 232.

~~4.~~3. Collect sufficient analytical and geotechnical data to complete a site-specific risk assessment of the exposure pathways.

~~5.~~4. Collect the proper data to meet the data quality objectives (DQOs) to support a No Further Action (NFA) status under NFA Criterion 5 and obtain a Class III permit modification to remove this site from Table A of the Holloman Air Force Base (HAFB) Permit No. NM6572124422 (New Mexico Environment Department [NMED], 2005)~~closure of the site based on guidance from the New Mexico Environment Department (NMED)~~.

A detailed summary of the site history is included in the RFI Work Plan. The anticipated activities for this project include:

- Mobilization and demobilization of equipment
- Direct Push Technology (DPT) soil boring, soil boring abandonment, and monitoring well installation

- Soil~~, soil vapor, indoor air,~~ and groundwater sampling

3 HAZARD ASSESSMENT AND CONTROLS

3.1 Task Hazard(s) Summary

The potential health and safety hazards of this task are summarized below in Table 3-1. The potential for encountering these hazards is ranked (high, moderate, or low) based on the work to be performed and the hazard control measures to be used. All tasks and their control measures are addressed in Task Specific Activity Hazard Analyses (AHAs) in Attachment A of this HASP Addendum.

Table 3-1. Task Hazards Summary

Summary	Hazard potential [High, Moderate, or Low]	Description of potential hazards
√ General **Safety** ~~(i.e. Walking and working surfaces, heavy equipment, traffic, falls, excavations, power and hand tools, materials handling, confined spaces, electrical safety, etc.)~~	• Moderate ~~All tasks and their control measures are addressed in Task Specific Activity Hazard Analyses (AHAs) in Attachment A~~	• Walking and surfaces • Heavy equipment and vehicular traffic • Materials handling • Slips, trips, and falls
√ **Utilities**	• Moderate	• Buried • Over head • Building Although these hazards should not be associated with this particular scope of work, it is necessary to verify that the hazards can be controlled.
√ **Chemical**	• Moderate	• Volatile Organic Compounds: Benzene, Toluene, Ethylbenzene and Xylenes (see Attachment B) • Sample preservatives (acids) • Also sampling for semi-volatile organic compounds (SVOCs), polychlorinated biphenyls (PCBs), and Target Analyte List (TAL) Metals
√ **Physical**	• Moderate	• Thermal stressors • Equipment noise
√ **Biological**	• Low	• Insect stings and bites • Poisonous snakes/reptiles

(i.e. Plants, animals, insects, spiders, infectious waste)		(Potential for contact should be minimal)

3.2 Hazard Control Measures

General safe work practices and control measures are identified and summarized in the *Basewide Health and Safety Plan* (Basewide HASP) (Bhate Environmental Associates, Inc. [Bhate], December 2003). This HASP Addendum has been updated to be consistent with the practices described in the *U.S. Army Corps of Engineers Safety and Health Requirements Manual, EM 385-1-1,* September 2008. Additional task-specific hazards and control measures are identified for non-routine tasks as part of the Activity Hazard Analysis (AHA) process. AHAs have been developed for each of the following activities and are included in Attachment A:

- General site activities/mobilization and demobilization
- Soil boring, monitoring well installation
- Soil~~, soil vapor, indoor air,~~ and groundwater sampling

3.3 Written Safety Procedures and Programs

Table 3-2 provides a summary of the existing safety procedures and programs that will be used for this task. Copies of applicable procedures and programs are included in the Basewide HASP, as indicated.

Table 3-2. Written Safety Procedures and Programs

Reference Procedure or Program	Applicable Section(s)
Hazard Communication Program	All (Refer to Basewide HASP)
Respiratory Protection Program	All (Refer to Basewide HASP)
Hearing Conservation Program	All (Refer to Basewide HASP)
Incident Reporting and Investigation Program	All (Refer to Basewide HASP)
General Work and Safety Rules	All (Refer to Basewide HASP)
Site Health and Safety Inspections	All (Refer to Basewide HASP)
Environmental Monitoring	All (Refer to Basewide HASP)
Personal Protective Equipment Program	All (Refer to Basewide HASP)
Thermal Stressors Program	All (Refer to Basewide HASP)
Materials Handling Program	All (Refer to Basewide HASP)
Housekeeping Program	All (Refer to Basewide HASP)
Fire Prevention/Protection/Response Plans Program	All (Refer to Basewide HASP)
Utilities Program	All (Refer to Basewide HASP)
Electrical Safety Program	All (Refer to Basewide HASP)

Emergency Procedures Program	All (Refer to Basewide HASP)
Hand and Power Tools Program	All (Refer to Basewide HASP)

3.4 Permits

Before site activities can begin, there are several pre-construction documents and approval requirements to be met, including Air Force Form (AF Fm) 332 approval, Base dig permit with utility clearances, site security measures, and facility manager notification of the intended operations. NationView will coordinate project requests for Base installation support services through the 49th Civil Engineering Squadron/Civil Engineering Asset Management Flight (CES/CEA). Pertinent to the start of activities, a pre-construction meeting and site walk-through will be conducted with the U.S. Army Corps of Engineers (USACE) Resident Engineer, Holloman Air Force Base (HAFB) personnel, and the NationView Site Manager to inspect site conditions for site/equipment access, equipment staging, and decontamination area(s), potential site hazards and emergency evacuation routes. Also reviewed at this time will be project procedures in accordance with the schedule and planned activities.

This page intentionally left blank.

4 PERSONAL PROTECTIVE EQUIPMENT

4.1 Purpose

The purpose of this program is to ensure that personal protective equipment (PPE) is selected in accordance with 29 Code of Federal Regulations (CFR) §1910.132, properly used and maintained, and that NationView personnel are properly trained in the inspection, use, and maintenance of PPE.

4.2 Scope

This program applies to all NationView operations including the sub-contractors on NationView managed projects. The following PPE as presented in Table 4-1 will be used for the identified activities based on the best available information about the work requirements and anticipated hazards.

Table 4-1. Personal Protective Equipment by Activity

Activity	Head/Face	Foot	Hands	Respiratory	Clothing
Mobilization / Demobilization	Hard Hat[1] (for overhead hazards), Safety Glasses[2] with rigid side shields	Steel toed boots	Leather gloves as needed	None[3, 4]	Minimum of long pants and shirts with a minimum 4-inch sleeve
General Site Labor	Hard Hat[1] (for overhead hazards), Safety Glasses[2] with rigid side shields Goggles if windy or dusty conditions exist Hearing protection (ear muffs or ear plugs) if sound levels exceed 85 decibels A-weighted (dBA)	Steel toed boots Boot covers as needed	Leather gloves as needed Chemical resistant gloves (nitrile) if contact with contaminants is possible	None[3, 4]	Minimum of long pants and shirts with a minimum 4-inch sleeve High visibility vests around equipment operation or traffic

Activity	Head/Face	Foot	Hands	Respiratory	Clothing
Equipment Operation (Drilling)	Hard Hat[1] (for overhead hazards), Safety Glasses[2] with rigid side shields Goggles if windy or dusty conditions exist Hearing protection (ear muffs or ear plugs) if sound levels exceed 85 dBA	Steel toed boots Boot covers as needed	Leather gloves as needed Chemical resistant gloves (nitrile) if contact with contaminants is possible	None[3, 4] Full face Air Purifying Respirator with Organic vapor (OV) and P100 combination cartridges or Powered Air Purifying Respirator (PAPR) with P100/OV cartridges based on monitoring results	Minimum of long pants and shirts with a minimum 4-inch sleeve High visibility vests around equipment operation or traffic Tyvek coveralls may be worn where splashing is possible and as recommended by the SSHO[5]
Equipment Decontamination	Hard Hat[1] (for overhead hazards), Safety Glasses[2] with rigid side shields Goggles if windy or dusty conditions exist Hearing protection (ear muffs or ear plugs) if sound levels exceed 85 dBA	Steel toed boots Boot covers	Chemical resistant gloves (nitrile inner and outer)	None[3, 4] Full face Air Purifying Respirator with OV and P100 combination cartridges or with P100/OV cartridges based on monitoring results	Minimum of long pants and shirts with a minimum 4-inch sleeve Tyvek coveralls may be worn where splashing is possible and as recommended by the SSHO[5] High visibility vests around equipment operation or traffic

Activity	Head/Face	Foot	Hands	Respiratory	Clothing
Soil~~, Soil-Vapor, Indoor Air,~~ and Groundwater, Sampling/ Screening	Hard Hat[1] (for overhead hazards), Safety Glasses[2] with rigid side shields Goggles if windy or dusty conditions exist Hearing protection (ear muffs or ear plugs) if sound levels exceed 85 dBA	Steel toed boots Boot covers as needed	Chemical resistant gloves (nitrile inner and outer)	None[3, 4] Full Face Air Purifying Respirator with OV and P100 combination cartridges or PAPR with P100/OV cartridges based on monitoring results	Minimum of long pants and shirts with a minimum 4-inch sleeve Tyvek coveralls may be worn where splashing is possible and as recommended by the SSHO High visibility vests around equipment operation or traffic
Supervision of work	Hard Hat[1] (for overhead hazards), Safety Glasses[2] with rigid side shields Goggles if windy or dusty conditions exist Hearing protection (ear muffs or ear plugs) if sound levels exceed 85 dBA	Steel toed boots Boot covers as needed	Leather gloves as needed Chemical resistant gloves (nitrile) if contact with contaminants is possible	None[3, 4] Full Face Air Purifying Respirator with OV and P100 combination cartridges or PAPR with P100/OV cartridges based on monitoring results	Minimum of long pants and shirts with a minimum 4-inch sleeve Tyvek coveralls may be worn where splashing is possible and as recommended by the SSHO High visibility vests around equipment operation or traffic

Notes:

[1] Hard hats are not required inside fully enclosed equipment cabs.

[2] Safety Glasses with rigid side shields approved by American National Standards Institute (ANSI) Z-87 required at all times.

[3] Voluntary use of respirators is authorized for comfort from nuisance dusts and odors, provided they are issued and used in accordance with established respiratory protection program procedures.

[4] Cartridge change out will occur at the following conditions:

- Damage to cartridge
- Cartridge is wet, restriction in breathing, unusual odors
- Cartridge is visibly clogged with dust, restriction in breathing

- After each day of use with no continuous exposures over the established Permissible Exposure Limits (PELs) per 29 CFR §1910.1028(g)(3)(i) (benzene standard) and the cartridge manufacturer's change out calculations based on anticipated concentrations.
- Changes that may be otherwise identified in 29 CFR §1910.120.

[5] SSHO = Site Safety and Health Officer

The following qualified person certifies that the selection of PPE is based on best available information about the work requirements and anticipated hazards.

Printed name:	Signature:	Date:
Sally S. Smith, MHS, CIH, CHMM, CSP, CPEA~~Brian Muller, CIH, CSP, CHMM~~ Health and Safety Manager	Sally S. Smith	3/24/2010

5 SITE MONITORING

Site monitoring will be conducted using direct-reading instruments primarily in the workers' breathing zone. To the extent feasible, site operations will be conducted and modified as needed to ensure that personnel are situated upwind of the any intrusive activities. Initial upwind background and work-zone readings will be obtained before the initiation of activities. Readings of breathing zones (unless location is otherwise specified) will be taken periodically during all activities. The SSHO has the authority to modify the level of protection required for work at this site as well as halt operations as deemed necessary to control personal exposures. Monitoring results will be recorded on an Atmospheric Monitoring Log Field Health and Safety form maintained by the SSHO. Monitoring, calibrating, and maintaining instruments are the responsibility of the SSHO. Table 5-1 summarizes the site monitoring parameters and action levels applicable for direct reading exposure monitoring.

Table 5-1. Direct Reading Exposure Monitoring

Activity(s)	Compound / Instrument	Action Level(s) and Frequency	Actions
Soil boring and well installation Soil~~, soil vapor, indoor air,~~ and groundwater sampling	Total VOCs / Photoionization Detector (PID)	0 - 5 parts per million (ppm) Every 15 minutes during intrusive activities	Continue work in required PPE and continue monitoring.
		> 5 ppm to < 10 ppm (Sustained for more than 5 minutes)	Ensure personnel are upwind, notify the Project Manager (PM). SSHO will upgrade PPE to Level C respiratory protection with organic vapor and High Efficiency Particulate Air (HEPA) cartridge, as necessary. Implement appropriate controls such as ventilation. Monitor for benzene and implement actions listed below.
		> 10 ppm (Sustained for more than 5 minutes)	Stop work, ensure employees are upwind. Notify PM and Health and Safety Manager (HSM) for additional control measures.
	Benzene / By colorimetric tube or similar (where indicted by PID readings)	No detection up to 0.2 ppm	Continue work activities in required protective equipment. Perform integrated personal exposure monitoring using OV badge or charcoal tubes with calibrated pump per National Institute for Occupational Safety and Health (NIOSH) or Occupational Safety and Health (OSHA) method (consult HSM as needed).
		> 0.2 ppm	Cease work, exit the area to upwind location and notify the Site Manager.

Activity(s)	Compound / Instrument	Action Level(s) and Frequency	Actions
	Particulates / Personal DataRam or similar particulate monitor	0 – 1.5 milligrams per cubic meter (mg/m^3) (respirable) 1-5 mg/m^3 (inhalable/total) Every 15 minutes during intrusive activities	Continue work in required PPE and continue monitoring.
		>1.5 mg/m^3 - < 3 mg/m^3 (respirable) >5 mg/m^3 - < 10 mg/m^3 (inhalable/total) (Sustained for more than 5 minutes)	Cease work and ensure personnel are upwind, notify the Site Manager. SSHO shall upgrade PPE to air purifying respiratory protection with HEPA cartridges. Perform personnel exposure monitoring using integrated time weighted average (TWA) monitoring.
		>3 - < 30 mg/m^3 (respirable) >10 - <100 mg/m^3 (total inhalable) (Sustained for more than 5 minutes)	Cease work and ensure personnel are upwind, notify the Site Manager. SSHO shall upgrade PPE to powered air purifying respiratory protection with HEPA cartridges. Perform personnel exposure monitoring using integrated TWA monitoring.
Intrusive Soil Activities	Lower Explosive Limit (LEL)	<10% LEL	Continue work in required PPE and continue monitoring.
		>10% LEL	Cease work and ensure personnel are upwind, notify the Site Manager. Ensure all sources of ignition are kept >50 feet away.
All site activities	Noise	< 85 dBA	Continue work in required PPE and continue monitoring.
		> 85 dBA to < 110 dBA	Ear plugs or ear muffs must be worn with a Noise Reduction Rating (NRR) of at least 26 dBA.
		> 110 dBA to < 130 dBA	Ear plugs and ear muffs must be worn together each with a NRR of at least 26 dBA.
		> 130 dBA	Cease work and ensure personnel leave work area. Notify the PM.

6 SITE CONTROL

6.1 Site Activities

Site-specific site control measures will be used to control access to the work area. Tables 6-1 and 6-2 summarize the site control requirements applicable for both general work areas and work areas with potentially contaminated media, respectively.

Table 6-1. Site Control for General Work Area(s)

Location	Site Control Procedure (discuss important elements such as signs, barricades, fencing, briefings, sign-in/out logs, etc.)
General Work Area	Due to the location of the project site, access will be coordinated with the Site Manager and HAFB Operations. Access will be made via a specified route. The SSHO will be responsible for the accountability for all onsite personnel using appropriate sign in / sign out procedures as needed. The SSHO shall be responsible for maintaining adequate site control in order to limit hazards to site workers and site visitors. To the extent feasible, immediate work areas shall be cordoned off through the use of devices such as traffic cones, caution tape, or construction fencing along with appropriate signage such as "Danger – Construction Area, Authorized Personnel Only" and "Hard Hat, Safety Glasses, and Safety Boots Required in this Area". All site workers shall be aware of surroundings and prevent unauthorized personnel as well as vehicle traffic from entering the work area. In areas where traffic control is required, all traffic control devices and methodologies will comply with the U.S. Department of Transportation (DOT) Manual on Uniform Traffic Control Devices (MUTCD, http://mutcd.fhwa.dot.gov) including the use of appropriate roadway markings, highly visible safety vests, and flagmen as needed.

Table 6-2. Site Control for Potentially Contaminated Area(s)

Location	Site Control Procedure (discuss important elements such as signs, barricades, briefings, qualifications, required supplies and equipment, sign-in/out logs, etc.)
Support Zone (SZ)	Located outside of contaminated areas, access will be from clean areas or from the Exclusion Zone through the Contamination Reduction Zone.
Contamination Reduction Zone (CRZ)	The Contamination Reduction Zone will be demarcated with caution tape or temporary construction fencing. Decontamination stations will be located here.
Exclusion Zone (EZ)	Exclusion Zone work areas will be clearly demarcated with caution tape or temporary construction fencing. All access to this area will require the use of a sign-in/out log.

6.2 Decontamination

Required decontamination procedures are described below in Table 6-3.

Table 6-3. Decontamination Procedures by Location

Type of Decontamination	Decontamination Methods
Personnel decontamination	Personal hygiene will be the responsibility of each individual worker. Eating, drinking, chewing tobacco or gum, smoking, and any other practice that may increase the possibility of hand-to-mouth contact is prohibited in the work area. Personnel will be required to thoroughly wash hands and face prior to eating, drinking, or smoking. Any disposable PPE used will be collected following use in the work area for proper disposal. All disposable PPE will be removed and disposed of in a labeled, pre-designated receptacle prior to leaving the work area to prevent the spread of contaminants. Upon return, new and/or cleaned PPE will be provided for use. In the case of excessive soiling or splattering, the PPE shall be changed out more frequently to reduce the spread of contamination and reduce the potential for contaminant breakthrough. Reusable PPE shall be cleaned with soap and water after each use. Respirator filter cartridges (if used) shall be changed out on a daily basis. The decontamination area will be divided into two general areas (equipment area and personnel decontamination area). When exiting the work area, workers will leave all equipment in the equipment area. Workers will then remove PPE. Gloves will be turned inside out so as to not come into contact with potentially contaminated material. Respirators if used will then be removed and set aside for cleaning. Workers will then proceed to the personnel decontamination area and don clean gloves for use with soap and water to wash respirators, any other reusable PPE and tools. A small wash area will be provided so workers can then wash their face and hands. Clean paper towels and/or rags will be used to dry hands and face. Spent PPE and towels/rags will then be placed in a 55-gallon drum for proper disposal at the end of the project. The drawing below depicts a typical decontamination sequence.
Equipment decontamination	Work efforts will be made to minimize equipment contact with contaminated materials. Prior to leaving the work area and land-farm following placement of contaminated soils, equipment (tires, excavator/loader buckets, hand tools) will be dry decontaminated. Soils from the dry decontamination process will be disposed with the excavated materials. Decontamination tools may include brooms and shovels.

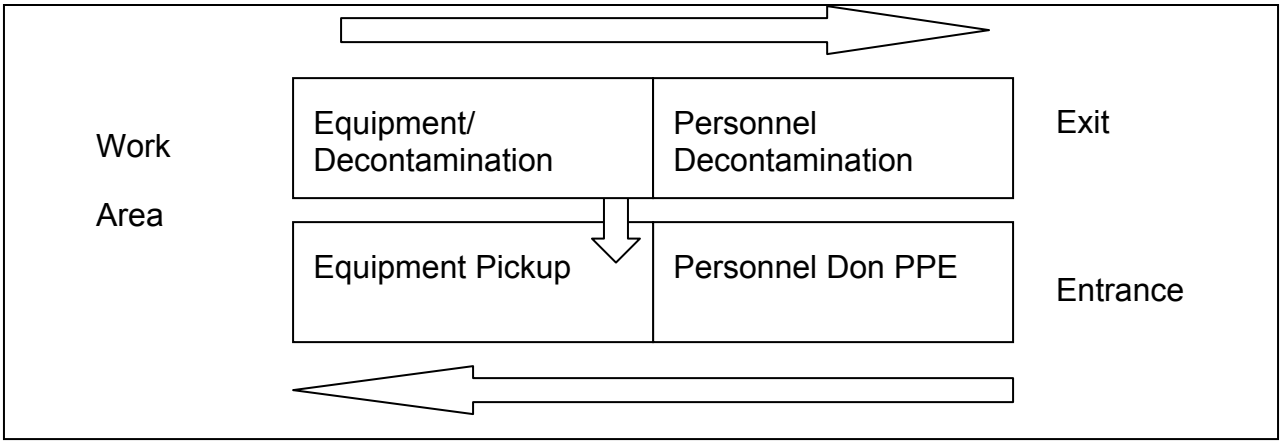

7 COMMUNICATIONS

Cellular telephones will be available to summon emergency services as required. Refer to Sections 10, 11, and 12 of this Site-Specific Addendum (SSA) to the HASP for site specific guidance on emergency situations and appropriate actions. Site communication amongst workers shall be a combination of verbal and line of sight hand communications. Visual signals include:

1. Hand gripping throat = Can't breathe,
2. Grip partner's wrist or both hands at waist = Leave area immediately,
3. Hands on top of head = Need assistance,
4. Thumbs up = OK, I'm all right, I understand,
5. Thumbs down = No, Negative

Cellular telephone use is not permitted while operating equipment. However, in the event of an emergency, the support zone may contact operators of heavy equipment with hand held radios or cellular phones.

This page intentionally left blank.

8 MEDICAL SURVEILLANCE AND TRAINING

The medical surveillance and training requirements for NationView's on-site personnel working on the soil boring, soil sampling, ~~soil vapor sampling, indoor air sampling,~~ well installation, and groundwater sampling activities will follow the requirements outlined in the Basewide HASP Sections 7.4 and 7.5, respectively.

All personnel performing on-site work activities, wherein they may be exposed to hazards resulting from field activities, will have completed applicable training in compliance with 29 CFR Part 1910/29 CFR Part 1926 and Engineering Manual (EM) 385-1-1. Table 8-1 provides a summary of the minimum training requirements for site project personnel.

Table 8-1. Required Worker Training and Site-Specific Training

Required worker training	Site-specific training requirements
√ 40-hour General Site Worker √ 8-hour Supervisor (as applicable) √ 8-hour Refresher (as applicable) √ 30-hour for Construction (SSHO) No retraining requirements are anticipated during the project	All personnel working on site shall attend site-specific orientation/training prior to starting onsite project work. This training will be facilitated by the SSHO.

Additionally, at a minimum the SSHO or the designated representative and one other person will be certified in First Aid and Cardiopulmonary Resuscitation (CPR), and will be continuously present during site operations.

This page intentionally left blank.

9 HAZARDOUS CHEMICALS

Hazardous chemicals (as defined in 29 CFR §1910.1200) to be brought or used on-site are identified below. This chemical inventory and associated Material Safety Data Sheet (MSDSs) will be maintained by the SSHO.

Table 9-1. Hazardous Chemicals Brought On-Site

Chemical Name	Amount	Location	Purpose
Assorted fuels, lubricants, coolants, etc. necessary for equipment operation	No storage planned. Quantities limited to immediate use requirements of on-site equipment.	No storage planned. Materials to be brought on-site by vendor's maintenance vehicle.	Equipment Servicing and Operation
Calibration gases for air monitoring equipment, if required for instruments in use	One small aluminum cylinder of each required gas. (Each contains approximately 35 liters [L] of gas mixture).	Storage with monitoring equipment in field office	Calibration of monitoring equipment
Groundwater sample preservative (hydrochloric acid)	2 milliliter (mL)/vial	Minimal quantities will be required for groundwater sampling	Groundwater Sampling

Hazardous materials anticipated to be brought on site include preservatives for groundwater samples, calibration gases for air monitoring equipment, and possible fuel, lubricants, or coolants for drill rigs and accessory vehicles. No other hazardous materials are anticipated to be brought on site by NationView or any potential subcontractor for use on site under this scope of work.

A copy of the NationView Hazard Communication Program is included in the Basewide HASP. A MSDS must be maintained on site for any hazardous materials stored or used. A MSDS must be submitted to the HSM and approvals obtained prior to bringing any hazardous materials on the job site. The MSDSs for all hazardous materials will be reviewed with all onsite personnel by the SSHO as a part of chemical specific hazard communication training.

Additionally, all personnel onsite will have appropriate general hazard communication training per 29 CFR §1910.1200 and 29 CFR §1910.120. All containers used to store hazardous materials or IDW will be properly labeled with the identity and hazards associated with the contents. All IDW water will be contained in 55-gallon U.S. DOT approved drums. An inventory of the number of drums will be maintained by the SSHO. The labeling will be weatherproof and fade proof for a minimum of 1 year. An IDW holding area will be designated at or near the subject site. Groundwater sampling results will be used to characterize the IDW.

10 EMERGENCY ACTION AND RESPONSE

Personnel responsible for coordinating emergency response actions during the SWMU 8 DPT soil boring, well installation~~, soil, soil vapor, indoor air,~~ and groundwater sampling activities are identified below in Table 10-1. A map showing directions to the authorized medical facility are included in Section 12.

Table 10-1. Emergency Coordinator and Alternate

Responsibility	Name	Phone Number(s)
Task Emergency Coordinator	Mr. John Hymer~~Dustin McNeil~~	Office (575) 201-4261~~(303) 597-2450~~ Cell (575) 491-9171~~(303) 895-1963~~
Alternate Emergency Coordinator	Mr. Dave Rizzuto	Office (~~505~~575) 67~~9~~4-2~~1~~0~~0~~12 Cell (~~505~~575) 430-3965

If an emergency situation develops which requires evacuation of the work area, the evacuation procedures in Table 10-2 shall be followed.

Table 10-2. Evacuation Procedures

Evacuation Step	Methods and comments:
Notify affected workers	Use of site communication methods as applicable
Evacuate to safe location	Assemble at the primary evacuation site (support area outside of the exclusion zone)
Assemble and account for workers	Emergency Coordinator shall account for personnel using site Sign in/Sign out sheet
Notify Fire and Emergency Services	Notification as needed
Complete incident report	Follow the Incident Reporting and Investigation Procedure

Table 10-3 summarizes potential emergency situations and response actions that are applicable for the SWMU 8 work site.

Table 10-3. Potential Emergency Situations

In case of	Response actions
Injury or illness	Treat injury with applicable First Aid. All work related injuries beyond first aid will result in notification of Emergency Services and notification of the employee supervisor. Any employee requiring advanced medical treatment will be accompanied by a knowledgeable company employee that can answer potential questions on job duties and hazards. Make notifications in accordance with the Incident Reporting and Investigation Procedure (found in Section 10.2.2 of the *Basewide Health and Safety Plan*, Bhate, December, 2003).
Chemical exposure	First Aid shall be provided such as but not limited to: move victim to fresh air, remove contaminated clothing, flush affected skin with water, and seek medical attention.
Fire or explosion	Notify emergency services immediately. All personnel shall evacuate the immediate area of the fire and move to an upwind location. Personnel shall not engage in fire fighting activities use of fire extinguisher) unless trained to do so and only in the incipient stages of fire.
Adverse weather	Tornados, lightning, or other threatening weather conditions will result in an immediate shut down of operations and evacuation of personnel. Lightning proximity will be determined by measuring the time interval between the visually observed lightning flash and the subsequent sound of thunder. An interval less than 30 seconds will prompt the shut down. Operations will be shut down for the period of the storm passing plus an additional 20 minutes.
Material spill or release	Vehicles and equipment will be maintained and inspected so as to prevent fluid leaks. Should any vehicle fluid leaks occur, the equipment will be taken out of service to make necessary repairs and any contaminated material will be cleaned-up and disposed of properly. Spill kits will be available to facilitate prompt containment and clean-up of spills. Notification will be made in accordance with the Incident Reporting and Investigation Procedure. Storage areas will be designed to have secondary containment as required, and work plans will be executed to accommodate stormwater runoff and minimize the potential for contamination spread.

11 EMERGENCY CONTACTS

In the event of an emergency, the following contacts should be made, as appropriate:

HAFB Emergency Number (using HAFB phone system) 911
Operators will assist with Medical, Fire, and Police emergencies

HAFB Security Force.....(~~505~~575) 572-5037

HAFB Fire Protection .....(~~505~~575) 572-1117

HAFB Hospital – 49th Medical Group (Main switchboard) .....(~~505~~575) 572-2778

Civilian Hospital (Alamogordo)
Gerald Champion Regional Medical Center. .....(~~505~~575) 439-6100

HAFB Fire Protection (Non-emergency) ……(575) 572-7228

Range Control (for Heat Index and Category) ……...(575) 678-2222

After initial contacts have been made and the situation has stabilized, notify the NationView Site Manager, SSHO, Senior Project Manager, and/or HSM, as appropriate.

This page intentionally left blank.

12 HOSPITAL DIRECTIONS

In the event of a true medical emergency ("life or limb"), HAFB Emergency Services should be used. Notification of any injury must be made to HAFB Emergency Services. NationView personnel and subcontractors should not transport injured personnel to the HAFB Hospital without prior authorization from HAFB Emergency Services.

Other injuries should be treated as necessary at Gerald Champion Regional Medical Center at 2669 Scenic Drive, Alamogordo, NM 88330. From HAFB, exit the Main Gate and proceed east on US-70 onto US-54, continue north on US-54 to Indian Wells Road, turn right heading east to Scenic Drive, and turn left on Scenic proceed to the medical center. A map to this hospital is presented as Figure 12-1.

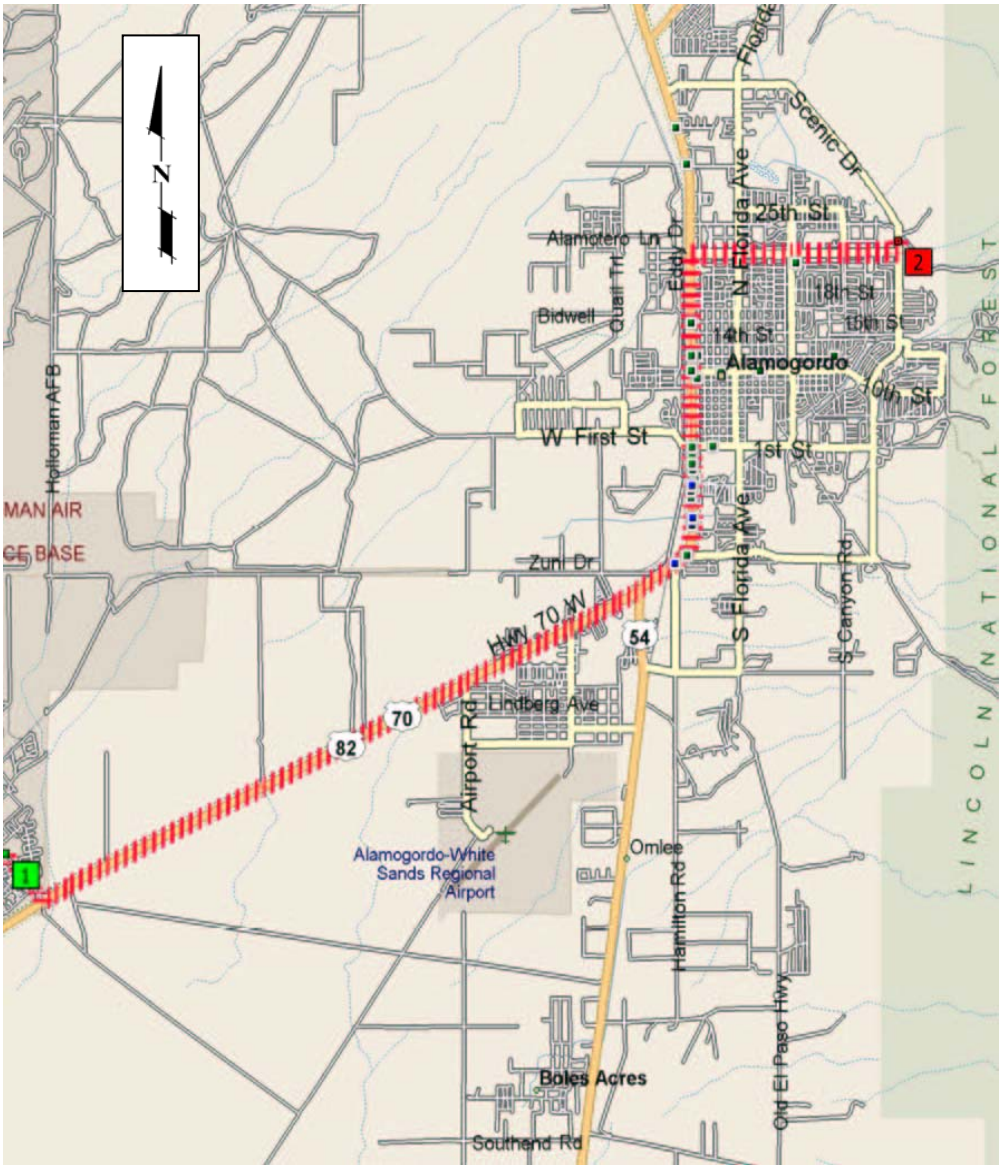

NATIONVIEW	HOSPITAL ROUTE MAP Holloman Air Force Base to Gerald Champion Regional Hospital Source: Microsoft Expedia Street Maps	SWMU 8 RFI Holloman Air Force Base SSA to the HASP Figure 12-1
	Not to Scale / Date ~~January 2009~~March 2010	

Figure 12-1. Hospital Route Map

13 REFERENCES

Bhate. December 2003. *Final Basewide Health and Safety Plan, Holloman Air Force Base, Alamogordo, New Mexico.*

NationView, LLC. March 2010. *Final RCRA Facility Investigation Work Plan, SWMU 8, Holloman Air Force Base, New Mexico*.

New Mexico Environment Department (NMED). September 2005. *Appendix 4-A: Summary of Solid Waste Management Units (Table A and Table B), Holloman Air Force Base, Hazardous Waste Facility Permit No. NM6572124422*.

U.S. Army Corps of Engineers. September 2008. *EM 385-1-1 U.S. Army Corps of Engineers Safety and Health Requirements Manual, EM 385-1-1*.

Additional documents reviewed but not cited:

NationView, LLC. August 2009. *Corporate Health and Safety Plan for Construction Rev. 1*.

This page intentionally left blank.

ATTACHMENT A

ACTIVITY HAZARD ANALYSES (AHAS)

Activity Hazard Analysis (AHA) – 01

Task: SWMU 8 RCRA Facility Investigation	NationView Project Number: 8080014.03	
Minimum Personal Protective Equipment (PPE): Level D PPE (Long pants, shirts with minimum 4" sleeve, steel toe boots, safety glasses, hard hat for overhead hazards, leather work gloves, and hearing protection, as required)	Location: Holloman Air Force Base, New Mexico	
	Analysis Approved by: ~~Brian Muller, CIH, CSP, CHMM~~Sally S. Smith, MHS, CIH, CHMM, CSP, CPEA	Date: ~~January 2009~~March 2010

Activity	Potential Hazards	Recommended Controls
General Site Activities including Mobilization / Demobilization and Site Preparation Note: Each workday shall begin with a mandatory daily safety meeting for all on-site workers	Slips, trips, or falls on walking and working surfaces	• Determine the best access route prior to transporting equipment and tools • Continuously inspect the work area for slip, trip, and fall hazards • Pay attention; ensure safe and secure footing • Maintain clean work areas by following good housekeeping procedures • Be alert for uneven and variable terrain • Wear slip resistant footwear when walking/working on slippery surfaces or slopes
	Site Traffic	• Be aware of potential vehicle traffic while on site • Follow posted warnings and rules for travel around site • All personnel to wear highly visible safety vests
	Eye injury	• Use approved safety glasses with rigid side shields
	Overhead hazards	• Personnel will be required to wear hard hats that meet ANSI Standard Z89.1 in all areas with overhead hazards
	Cuts, punctures, and abrasions	• Wear leather work gloves when handling materials or using tools
	Dropped objects	• Steel toe boots meeting ANSI Standard Z41 will be worn
	Thermal Stressors (i.e. heat stress, cold stress)	• Employees will have appropriate clothing for variable weather • Use of long sleeves or application of sunscreen with a high sun protection factor (SPF) on exposed skin encouraged • Employees will take breaks and drink plenty of fluids to prevent heat stress • Warming breaks will be permitted as necessary to prevent cold stress
	Back Injury from Materials Handling	• Use proper lifting techniques • Loads greater than 50 pounds require assistance or mechanical equipment • Prior to lifting, check the load for jagged or sharp edges • Avoid torso twisting motions while handling or moving loads

AHA – 01 (Continued)

Activity	Potential Hazards	Recommended Controls
Mobilization/Demobilization and Site Preparation (continued)	Inclement weather (Thunderstorms and tornadoes)	• Halt activities immediately and take cover during thunderstorm or tornado warnings, shelter in a building if possible, stay away from windows • If outdoors, stay close to the ground • Listen to radio or television announcements for pending weather information • Do not try to outrun a tornado on foot or in a vehicle
	Biological hazards (spiders, snakes, etc.)	• Workers will inspect the work area carefully and avoid placing hands and feet into concealed areas • Look in direction of travel for biological hazards to avoid
Safety Equipment Used	**Inspection Requirements**	**Training Requirements**
Level D PPE First Aid Kit Fire Extinguisher Eyewash	Weekly inspections will be performed on fire extinguishers. Weekly inspections will be performed on first aid kits. Portable eye wash will be inspected weekly. Informal daily work area inspections to be conducted by the SSHO. Formal weekly inspections to be conducted by the SSHO using the Site Safety and Health Inspection Form.	Site personnel have read and understand the SSA Site personnel possess all of the required training as specified in the SSA Site personnel received site specific safety indoctrination Site personnel have reviewed all applicable MSDSs At least two individuals on-site will have current CPR and First Aid training

Activity Hazard Analysis (AHA) – 02

Task: SWMU 8 RCRA Facility Investigation		NationView Project Number: 8080014.03	
Minimum Personal Protective Equipment (PPE): Level D PPE (Long pants, shirts with minimum 4" sleeve, steel toe boots, safety glasses, hard hat for overhead hazards, leather work gloves, chemical gloves (nitrile inner and neoprene outer), and hearing protection, as required)		Location: Holloman Air Force Base, New Mexico	
		Analysis Approved by: Sally S. Smith, MHS, CIH, CHMM, CSP, CPEA~~Brian Muller, CIH, CSP, CHMM~~	Date: ~~January 2009~~March 2010

Activity	Potential Hazards	Recommended Controls
Soil Boring and Sampling~~, Soil-Vapor and Indoor Air Sampling~~ Hazards and recommended controls from AHA – 01 apply	Drill Rig Hazards Including but not limited to: Flying debris, falling objects, noise, hydraulic failures, unguarded machinery, equipment rollover, movement of large, heavy drilling tools, etc.	• Drill rig is to be operated and maintained by qualified operators • A Drill Rig Inspection Checklist should be completed daily to ensure that the rig is operating properly • The inspection will include fittings, cables, pins, connections, lubrication points, controls, emergency stops, etc. • To the extent possible, the terrain should be level and the condition of the ground such that unexpected movement of the rig is unlikely • Stabilize the rig prior to boring • Wear required PPE (hard hat, safety glasses, work gloves, ear muffs or plugs, steel toe work boots), ensure loose clothing is secured • Maintain good housekeeping on and around drill rig

	Overhead/buried utilities	• Conduct a utility locate to identify the location of underground utilities in boring locations and complete and submit the~~any~~ required dig permit (Air Force Form 103)~~s~~ • Overhead utilities should be considered live until determined otherwise • Work activity adjacent to overhead electric power lines will not be initiated until a survey has been conducted to ascertain the safe clearance distance from energized lines. Please refer to the U.S. Army Corps of Engineers (USACE) *Safety and Health Requirements Manual* (EM 385-1-1, 2008) for a complete description of procedures required when working at a location adjacent to overhead power lines. The minimum required clearance distances from energized overhead electric lines are provided below. Nominal System Voltage / Minimum Rated Clearance 0 to 50 kV / 3 m (10 ft) 51 to 200 kV / 4.6 m (15 ft) 201 to 350 kV / 6 m (20 ft) 351 to 500 kV / 7.6 m (25 ft) 501 to 650 kV / 9.1 m (30 ft) 651 to 800 kV / 10.7 m (35 ft) 801 to 950 kV / 12.2 m (40 ft) 951 to 1100 kV / 13.7 m (45 ft) Note: kV = Kilovolts, m = Meter, ft = feet ~~Maintain a minimum distance of 15 feet from overhead utilities~~ • All underground utilities must be clearly marked before beginning work • No borings shall be made within a 4 foot "Buffer Zone" of any utility marking •

AHA – 02 (Continued)

Activity	Potential Hazards	Recommended Controls
Soil Boring and Sampling	Exposure to soil contaminants	• To the extent feasible, limit contact with subsurface materials • Wear required PPE when conducting intrusive activities • SSHO shall conduct breathing zone monitoring for VOCs with a PID and particulates in accordance with requirements for site monitoring • SSHO may require an upgrade in PPE or modification to work based on monitoring results • Wear appropriate PPE including chemical resistant gloves (nitrile inner and neoprene outer) and Tyvek coveralls to minimize potential contact with soil, as appropriate • Use appropriate decontamination methods
Monitoring Well Installation	Pinch points	• Utilize appropriate PPE (leather gloves) when handling well casings and tools

	Dust	• Use care when installing well materials (sand, bentonite, Portland cement) into monitoring well to prevent dust generation • Position body in an upwind location • Suppress dust generation using wet methods and careful handling
Well Development / Groundwater depth measurement / Groundwater sampling	Exposure to groundwater contaminants	• Position body upwind from monitoring well prior to opening cap • Wear appropriate PPE including chemical resistant gloves (nitrile inner and neoprene outer) and Tyvek coveralls to minimize potential contact with groundwater, as appropriate • Conduct work activities in a manner that minimizes potential contact with groundwater • Collect all PPE and disposable sampling equipment and dispose of properly • Wash hands and face prior to eating, drinking, or smoking

AHA – 02 (Continued)

Safety Equipment Used	Inspection Requirements	Training Requirements
Level D PPE First Aid Kit Fire Extinguisher Eyewash	Weekly inspections will be performed on fire extinguishers. Weekly inspections will be performed on first aid kits. Portable eye wash will be inspected weekly. Informal daily work area inspections to be conducted by the SSHO. Formal weekly inspections to be conducted by the SSHO using the Site Safety and Health Inspection Form.	Site personnel have read and understand the SSA Site personnel possess all of the required training as specified in the SSA Site personnel received site specific safety indoctrination Site personnel have reviewed all applicable MSDSs At least two individuals on-site will have current CPR and First Aid training

This page intentionally left blank.

ATTACHMENT B
PRIMARY CONTAMINANTS OF CONCERN

Properties of the Primary Contaminants of Concern

Contaminant	PEL	TLV	Route(s) of Exposure	Signs and Symptoms of Exposure		Target Organs	IP (eV)	Specific Gravity	VP (mm Hg)	Flash Point (°F)	LEL %	UEL %
				Acute	Chronic							
Benzene	1 ppm 5 ppm = STEL	0.5 ppm	Inhalation Ingestion Contact Absorption	Irritation of eyes, skin, nose, and throat, headache, dizziness, nausea, staggered gait, fatigue	Cancer (leukemia), adverse reproductive effects (female fertility, birth defects)	Eyes, skin, respiratory system, blood, central nervous system, bone marrow	9.24	0.88	75	12	1.2	7.8
Toluene	200 ppm (750 mg/m^3) Ceiling 300 ppm	50 ppm (188 mg/m^3)	Inhalation Ingestion Contact Absorption	Irritation of eyes, skin, nose, drowsiness, fatigue, weakness, confusion, headache, nausea, dilated pupils	Liver and kidney damage	Eyes, skin, respiratory system, CNS, liver, kidneys	8.82	0.87	21	40	1.1	7.1
Ethylbenzene	100 ppm (435 mg/m^3)	100 ppm (434 mg/m^3)	Inhalation Ingestion Contact Absorption	Irritation of eyes, and skin, may also cause conjunctivis (eyes)	CNS depression, pulmonary aspiration	CNS, eyes, skin, respiratory system	8.76	0.87	7	55	0.8	6.7
Xylenes (o-, m-, p-isomers)	100 ppm	100 ppm	Inhalation Ingestion Contact Absorption	Irritation of eyes, skin, nose	CNS permanent brain and nervous system damage	CNS, liver, and urinary system/kidneys	21	0.864	8	76	1.0	7.0

Notes:

PEL = Permissible Exposure Limit
TLV = Threshold Limit Value
IP = Ionization Potential
eV = Electron volt
VP = Vapor Pressure
mm Hg = Millimeters of mercury
°F = Degrees Fahrenheit
LEL = Lower Explosive Limit
UEL = Upper Explosive Limit
% = Percent
ppm = Parts per million
mg/m^3 = Milligrams per cubic meter of air
CNS = Central Nervous System
STEL = Short term exposure limit

This page intentionally left blank.