12/12/11

DEPARTMENT OF THE AIR FORCE

HEADQUARTERS 49TH WING (ACC)
HOLLOMAN AIR FORCE BASE, NEW MEXICO

ENTERED
DEC 2011

A. David Budak
Deputy Base Civil Engineer
550 Tabosa Avenue
Holloman AFB NM 88330-5840

New Mexico Environment Department
Attn: Mr. John Kieling
Hazardous Waste Bureau
2905 Rodeo Park Drive East, Building 1
Santa Fe NM 87105-6303

Dear New Mexico Environment Department

Holloman Air Force Base is pleased to submit the SS-39 Missile Fuel Spill Area ACM Work Plan Addendum for your review.

I certify under penalty of law that this document and all attachments were prepared under my direction or supervision according to a system designed to assure that qualified personnel properly gather and evaluate the information submitted. Based on my inquiry of the person or persons who manage the system, or those persons directly responsible for gathering the information, the information submitted is, to the best of my knowledge and belief, true, accurate, and complete. I am aware that there are significant penalties for submitting false information, including the possibility of fine and imprisonment for knowing violations.

If you have any questions, please contact Mr. David Scruggs of our Asset Management Flight at (575) 572-5395.

Sincerely

13 Dec 2011

A. DAVID BUDAK, GS-14, DAFC

Attachment:
SS-39 Missile Fuel Spill Area ACM Work Plan Addendum

cc:

(w/ Atch)	(w/o Atch)	(w/o Atch)
Mr. David Strasser	Mr. Will Moats	Ms. Laurie King
Hazardous Waste Bureau	Hazardous Waste Bureau	USEPA, Region 6 (6PD-F)
5500 San Antonio Dr. NE	5500 San Antonio Dr. NE	1445 Ross Ave., Ste 1200
Albuquerque NM 87109	Albuquerque NM 87109	Dallas TX 75202

7009 0820 0001 1128 0885

FINAL

ACCELERATED CORRECTIVE MEASURES WORK PLAN ADDENDUM
SS-39 MISSILE FUEL SPILL AREA (SWMUs 165, 177, 179, AND 181)
HOLLOMAN AIR FORCE BASE
ALAMOGORDO, NEW MEXICO

Prepared for:

Air Force Center for Engineering and the Environment
San Antonio, Texas

Prepared by:

Tetra Tech, Inc.
800 Oak Ridge Turnpike, Suite A-600
Oak Ridge, Tennessee 37830

Contract No. FA4890-06-D-0009
Task Order No. 5002

December 2011

This Page Intentionally Left Blank

TABLE OF CONTENTS

1.0 INTRODUCTION 1-1
1.1 INSTALLATION BACKGROUND 1-1
1.1.1 Location 1-1
1.1.2 History 1-1
1.2 SS-39 MISSILE FUEL SPILL AREA 1-2
1.2.1 Location 1-2
1.2.2 Site Description 1-2
1.2.3 Contamination History 1-2
1.3 SCOPE AND OBJECTIVE 1-3
1.4 WORK PLAN ADDENDUM ORGANIZATION 1-4

2.0 SITE-SPECIFIC ENVIRONMENTAL SETTING 2-1
2.1 DEMOGRAPHICS 2-1
2.2 CLIMATE 2-1
2.3 TOPOGRAPHY 2-1
2.4 SURFACE WATER 2-2
2.5 GEOLOGY 2-2
2.6 HYDROGEOLOGY 2-2

3.0 PREVIOIUS SITE INVESTIGATIONS 3-1
3.1 PHASE I REMEDIAL INVESTIGATION 3-2
3.2 PHASE II RCRA FACILITY INVESTIGATION 3-3
3.3 SUPPLEMENTAL GROUNDWATER INVESTIGATION 3-3
3.4 GROUNDWATER LONG TERM MONITORING, 1997 THROUGH 2005 3-4
3.5 SUPPLEMENTAL RFI ACTIVITIES 3-4
3.5.1 Sediment Sampling 3-4
3.5.2 Subsurface Soil Sampling 3-5
3.5.3 Permanent Monitoring Wells 3-5
3.5.4 Pre-Pack Temporary Wells 3-5
3.5.5 Groundwater Sampling 3-6
3.6 GROUNDWATER LONG TERM MONITORING, 2006 THROUGH 2011 3-7

4.0 ACCELERATED CORRECTIVE MEASURES 4-1
4.1 ACM SITE CHARACTERIZATION METHODS 4-1
4.2 ACM CLEANUP CRITERIA 4-2
4.3 INVESTIGATION RESULTS AND DATA EVALUATION 4-4
4.3.1 Soil Evaluation 4-4
4.3.2 Groundwater Evaluation 4-5
4.4 MEDIA AND PATHWAYS OF CONCERN FOR HUMAN HEALTH 4-7
4.4.1 Soil Pathways 4-7
4.4.2 Groundwater Pathways 4-8
4.5 MEDIA AND PATHWAYS OF CONCERN FOR ECOLOGIAL RISK 4-8
4.6 AREAS AND VOLUMES OF CONTAMINATION 4-9
4.6.1 Soil Contamination 4-9

4.6.2 Groundwater Contamination 4-10
4.7 RECOMMENDED REMEDIAL ACTION 4-10

5.0 CORRECTIVE MEASURES WORK PLAN 5-1
5.1 PRE-MOBILIZATION PLANNING 5-1
5.1.1 Permits and Requirements 5-1
5.1.2 Site Reconnaissance 5-2
5.2 MOBILIZATION 5-2
5.2.1 Personnel 5-2
5.2.2 Equipment 5-3
5.3 SITE PREPARATION 5-3
5.3.1 Site Layout, Spill Containment, and Equipment Lay Down Areas 5-4
5.4 EXCAVATION OF CONTAMINATED SOIL 5-5
5.4.1 Excavation Area 5-5
5.4.2 Excavation Equipment 5-5
5.4.3 Excavation Methodology 5-6
5.4.4 Determination of Complete Excavation Areas 5-6
5.4.5 On-Site Soil Management 5-7
5.5 RECORD KEEPING 5-7
5.6 POST-EXCAVATION INSPECTION 5-7
5.7 DECONTAMINATION 5-8
5.8 BACKFILLING AND SITE RESTORATION 5-9
5.9 DEMOBILIZATION 5-9
5.10 FIELD SAMPLING AND ANALYSIS 5-9
5.10.1 Data Quality Objectives 5-10
5.11 POST-EXCAVATION CONFIRMATORY SAMPLING 5-10
5.12 SAMPLE PREPARATION AND DOCUMENTATION 5-11
5.13 DECONTAMINATION 5-11
5.14 REPORTING OF DATA 5-11
5.15 WASTE MANAGEMENT AND DISPOSAL 5-12
5.16 WASTE DISPOSAL PROFILE ANALYSIS AND FACILITY SELECTION 5-12
5.17 OFF-SITE TRANSPORTATION AND DISPOSAL 5-12
5.18 RECORD KEEPING 5-13
5.19 FIELD HEALTH AND SAFETY 5-13
5.20 MEDICAL SERVICES CLINIC INFORMATION 5-14
5.21 MEDICAL SERVICES CLINIC INFORMATION 5-14
5.22 PERSONAL PROTECTIVE EQUIPMENT 5-15
5.22.1 Level D Protection 5-15
5.23 EXCAVATION SAFETY REQUIREMENTS 5-16

6.0 SITE CLOSURE 6-1
6.1 SOIL CLEANUP 6-1
6.2 PREVENT EXPOSURE TO GROUNDWATER 6-1
6.3 PERFORMANCE MONITORING 6-2
6.4 REQUEST FOR NO FURTHER ACTION .....

7.0 REFERENCES 7-1

TABLES

3-1 Screening of 1991 Remedial Investigation Soil Analytical Results for Direct Contact Risk
3-2 Screening of 1993 Phase II RFI Soil Analytical Results for Direct Contact Risk
3-3 Screening of 1994 Remedial Investigation Soil Analytical Results for Direct Contact Risk
3-4 Screening of 2006 Sediment Analytical Results for Direct Contact Risk
3-5 Screening of 2006 Soil Analytical Results for Direct Contact Risk
3-6 Screening of 1991 Remedial Investigation Soil Analytical Results for Vapor Intrusion Risk
3-7 Screening of 1994 Remedial Investigation Soil Analytical Results for Vapor Intrusion Risk
3-8 Screening of 2006 Sediment Analytical Results for Vapor Intrusion Risk
3-9 Screening of 2006 Soil Analytical Results for Vapor Intrusion Risk
3-10 Screening of 1991 Remedial Investigation Groundwater Analytical Results for Direct Contact and Vapor Intrusion Risk
3-11 Screening of 1993 Phase II RCRA Facility Investigation Groundwater Analytical Results for Direct Contact and Vapor Intrusion Risk
3-12 Screening of 1998 Groundwater Analytical Results for Direct Contact and Vapor Intrusion Risk
3-13 Screening of Groundwater Compliance Long Term Monitoring Analytical Results (1997-2006) for Direct Contact and Vapor Intrusion Risk
3-14 Screening of Chemicals Detected in Historical Long Term Monitoring Results (2006-2008) for Direct Contact and Vapor Intrusion Risk
4-1 Screening of Chemicals Detected in Soil Samples (2010) for Direct Contact Risk
4-2 Screening of Chemicals Detected in Soil Samples (2010) for Vapor Intrusion Risk
4-3 Screening of Chemicals Detected in Groundwater (2008-2011) for Direct Contact and Vapor Intrusion Risk
4-4 Soil Excavation Area Details

FIGURES

1-1 Holloman Air Force Base Installation Location, Alamogordo, New Mexico
1-2 SS-39 Location at Holloman Air Force Base
1-3 SS-39 Site Features
2-1 Groundwater Potentiometric Surface Map at SS-39 (July 2010)
2-2 Groundwater Potentiometric Surface Map at SS-39 (January 2011)
3-1 Soil Sample Locations at SS-39
3-2 Groundwater Sample Locations at SS-39
4-1 Chemicals in Soil Exceeding Residential Soil Screening Levels
4-2 Chemicals in Soil Exceeding Residential Soil Screening Levels (South of Building 1176)
4-3 Chemicals in Groundwater Exceeding Residential Screening Levels
4-4 Areas of Soil Contamination (SWUM 177 Sumps)
4-5 Areas of Soil Contamination (SWMU 167 and SWMU 179)
4-6 Area of Groundwater Exceeding Vapor Intrusion Screening Levels

APPENDICES

Appendix A Field Logs (2010 ACM Site Investigation)
Appendix B Survey Data
Appendix C Vapor Intrusion Model Results
Appendix D Analytical Data (2010 ACM)
Appendix E Holloman Air Force Base Standard Operating Procedures
Appendix F Waste Profile Sample Data
Appendix G Activity Hazard Analysis
Appendix H Chemical Concentration verses Time Plots

ACRONYMS

ACC	Air Combat Command
ACM	Accelerated Corrective Measure
AFCEE	Air Force Center for Engineering and the Environment
AMC	Air Materiel Command
ANSI	American National Standards Institute
AOC	Area of Concern
bgs	below ground surface
CFR	Code of Federal Regulations
DPT	direct push technology
DQO	Data Quality Objectives
DRO	diesel range organics
EMS	Emergency Medical Services
EPA	U.S. Environmental Protection Agency
FOS	Field Operations Supervisor
ft	foot or feet
ft/day	feet per day
ft/ft	feet per foot
ft/year	feet per year
ft^2	square feet
gal	gallon(s)
GRO	gasoline range organics
HAFB	Holloman Air Force Base
HASP	Health and Safety Plan
HGL	HydroGeoLogic, Inc.
HSA	hollow stem auger
in.	inch(es)
IRFNA	Inhibited Red Fuming Nitric Acid
IWFNA	Inhibited White Fuming Nitric Acid
LF	linear feet
LTM	Long Term Monitoring
LUC	Land Use Control

MCLs	Maximum Contaminant Level
µg/L	micrograms per liter
mg/kg	milligram per kilogram
mg/L	milligram per liter
MSDS	Material Safety Data Sheet
MS/MSD	matrix spike/matrix spike duplicate
NFA	No Further Action
NMAC	New Mexico Administrative Code
NMED	New Mexico Environmental Department
NMWRRI	New Mexico Water Resources Research Institute
NOD	Notice of Deficiency
PCE	Tetrachloroethylene
PID	photoionization detector
PPE	personal protective equipment
PVC	polyvinyl chloride
QA	quality assurance
QAPP	Quality Assurance Project Plan
QC	quality control
RCRA	Resource Conservation Recovery Act
RI	Remedial Investigation
RFI	RCRA Facility Investigation
RSL	Regional Screening Level
SL	screening level
SSL	Soil Screening Levels
SOP	Standard Operating Procedure
SSHO	Site Safety Health Officer
SVOC	semi-volatile organic compound
SWMU	Solid Waste Management Unit
SWPPP	Surface Water Pollution Prevention Plan
TCE	Trichloroethylene
TDS	total dissolved solids
Tetra Tech	Tetra Tech, Inc.
TPH	total petroleum hydrocarbons

TRPH	total reportable petroleum hydrocarbons
UDMH	unsymmetrical dimethylhydrazine
USACE	United States Army Corps of Engineers
USAF	United States Air Force
µg/L	microgram per liter
VI	vapor intrusion
VOC	Volatile Organic Compound
yd^3	cubic yards

This Page Intentionally Left Blank

1.0 INTRODUCTION

This Addendum to the Accelerated Corrective Measures (ACM) Work Plan was prepared by Tetra Tech, Inc. (Tetra Tech) on behalf of Holloman Air Force Base (HAFB) for the SS-39 Missile Fuel Spill Area Solid Waste Management Units (SWMUs) 165, 177, 179, and 181 at HAFB, New Mexico. The ACM Work Plan (Tetra Tech, 2009) is being reviewed by the New Mexico Environmental Department (NMED). Since submittal of the ACM Work Plan, an additional ACM site investigation was conducted in November, 2010. This addendum includes the results of 2010 ACM field investigation activities and provides an up-to-date assessment of all site data with respect to the most recent risk-based criteria for the protection of human health and the environment. Tetra Tech has prepared this document under contract to the U.S. Air Force Center for Engineering and the Environment (AFCEE), Contract No. FA4890-06-D-0009, Task Order No. 5002.

1.1 INSTALLATION BACKGROUND

1.1.1 Location

HAFB is situated in south-central New Mexico, in the northwest-central part of Otero County. The Base is located approximately 75 miles northeast of El Paso, Texas, and 7 miles west of Alamogordo, New Mexico. The Base occupies about 50,000 acres in the northeast quarter of section Township 17 South, Range 8 East. Additional land extending northward is occupied by the White Sands Missile Range testing facilities. An installation location map is included as Figure 1-1.

1.1.2 History

Holloman AFB, formally Alamogordo Army Airfield, was initiated as a temporary facility during World War II, with construction commencing on 6 February 1942. Its status, mission, and Command have periodically changed over the years. Today, HAFB is under the Air Combat Command (ACC).

Prior to 1942, the property occupied by HAFB was undeveloped rangeland. The Alamogordo Army Airfield was established in 1942 and was deactivated in 1945. The facility was again reactivated in 1945 and was operated by the Air Materiel Command (AMC) until 1951. AMC tested pilot-less aircraft, guided missiles, and other equipment. The facility mission remained largely unchanged until 1971, although the facility identification changed several times during the 20-year span: Air Force Missile Test Center (1951 to 1952), Holloman Air Development Center (1952 to 1957), and Air Force Missile Test Center (1957 to 1971). The Tactical Air Command operated the facility from 1972 to 1992 and housed

the 49th Tactical Fighter Wing, 479th Tactical Training Wing, 833rd Air Division, and 4449th Mobile Support Squadron. In 1992, HAFB was realigned under the ACC where it operates today.

1.2 SS-39 MISSILE FUEL SPILL AREA

1.2.1 Location

SS-39 is located in the central portion of HAFB along the Lost River Drainage Basin. The site is located along the northern slope of the Lost River Drainage Basin immediately south of Building 1176. The location of SS-39, with respect to HAFB, is shown on Figure 1-2.

1.2.2 Site Description

SS-39 is primarily undeveloped and moderately vegetated with salt cedars, shrubs, and grasses. The area immediately north of the site is relatively flat and heavily improved with the construction of Building 1176 and two asphalt paved vehicle lots east and west of the building. This portion of the site is the only section that has been improved with site features. Although relatively flat, an overall area-wide southerly dip is present. The area immediately south of Building 1176 represents the only other developed portion of SS-39. Two concrete-lined, 1-ft wide drainage ditches (SWMU 181, Drainage Trough) extend south-southeast and southwestward from the southern corners of the building. Each ditch discharges to separate sumps (SWMU 177, Drainage Sump), as shown on Figure 1-3.

1.2.3 Contamination History

SS-39 is located at the test sled launch area near Building 1176 (Figure 1-3). The launch pad at the south end of the track was constructed with concrete drains and a water deluge system. Spilled oxidizers and fuels were delivered to separate drains, diluted with water and flushed into the Lost River. In 1975, catch basins were installed to collect the spilled liquid fuels. Oxidizer vent lines from the engines were also installed and designed to discharge into the catch basins. Since 1975, no propellants have been intentionally released to the open drains. Surface and groundwater samples were collected from the Lost River in the vicinity of the test track in July of 1979. The results indicated that the test track had no observable impact upon the Lost River water quality. Waste propellants are currently collected and treated in the treatment system located in Building 1176.

Fueling activities for tests at the Alpha Pad were completed on the track at the Alpha Pad before each sled launch. The fuels were brought on location by truck because no fuels were stored at the launch facility. Before sleds were removed from the track, the fuels were emptied from the sleds into the proper storage

container (a process called de-tanking) and then the sleds were taken to Building 1176 where the remainder of the fuel was purged from the engines. Throughout the history of the test track, fuels have included at least the following: JP-4 (jet fuel); unsymmetrical dimethylhydrazine (UDMH); aniline; inhibited red fuming nitric acid (IRFNA); inhibited white fuming nitric acid (IWFNA); liquid oxygen; JPX (1:1 mixture of JP-4 and UDMH); dyes; solid rocket propellants; and other compounds. The drainage systems for the Alpha Pad and Building 1176 were designed to prevent accidents in the event of a fuel spill during the fueling and/or de-tanking activities.

The drainage systems collected and drained spilled oxidizers and propellants separately. At the test track, for example, fueling and de-tanking of oxidizers were all completed on the east half of the track and the same was done for propellants on the west half of the track. In the event of a spill, the propellants and/or oxidizers were collected in and drained through separate drainage systems.

In addition to these fuels, solvents such as trichloroethylene (TCE) were commonly used for sled maintenance in Building 1176. The management practices of these chemicals at Building 1176 were not extensively reviewed; however, interviews with past employees suggest that the washrack and drainage trenches could have received wastes.

1.3 SCOPE AND OBJECTIVE

The document provides an accelerated remedial strategy and corrective measures work plan for the SS-39 Missile Fuel Spill Area. The accelerated remedial strategy is based on the previous site investigation results and that have been supplemented by the 2010 ACM site investigation to address data gaps and to delineate the nature and extent of contamination. This report contains a comparison of historical and ACM sample results to the current risk-based screening levels (SLs) for pathways of concern at the site and identifies remedial measures tailored to achieve site closure in accordance with anticipated future land use. A streamlined corrective measures work plan is also provided to guide the activities required to implement the site remediation. As documented in the following sections, a soil cleanup for unrestricted land use and a No Further Action (NFA) Site Closure with land use controls (LUCs) to prevent risk via vapor intrusion (VI) from the groundwater plume is proposed.

1.4 WORK PLAN ADDENDUM ORGANIZATION

This work plan addendum is organized into seven sections. Section 1 is the introduction; Section 2 presents the site specific environmental setting of the SS-39, Missile Fuel Spill Area; Section 3 identifies the previous site investigation activities; Section 4 provides data evaluation and provides the rationale for the ACM; Section 5 presents the corrective measures work plan; Section 6 describes the site closure strategy; and Section 7 provides the references cited in this work plan.

Appendices are included which provide the 2010 ACM site investigation field logs, survey data, and laboratory analytical results tables (Appendices A, B and D, respectively). Appendix C provides the input and results spreadsheets for the soil to indoor air pathway VI modeling. The HAFB Standard Operative Procedures (SOPs) pertinent to the planned work at SS-39 are provided in Appendix E. The analytical results of waste profile samples collected during the 2010 ACM site investigation are provided in Appendix F. A site-specific Activity Hazard Analysis is provided in Appendix G. And, several plots illustrating chemical concentrations versus time plots are included in Appendix H. In addition to the HAFB SOPs, the Basewide Quality Assurance Project Plan (Bhate, 2003) will be adopted to use in conjunction with the execution of this ACM Work Plan Addendum.

2.0 SITE-SPECIFIC ENVIRONMENTAL SETTING

The environmental setting information in the following subsections is reproduced primarily from the Supplemental Resource Conservation and Recovery Act (RCRA) Facility Investigation (RFI) Report prepared by HydroGeoLogic, Inc (HGL) for SS-39 (HGL, 2007) unless cited otherwise.

2.1 DEMOGRAPHICS

Alamogordo is the county seat of Otero County and the only town of appreciable size within 30 to 50 miles of the Base. The population of Alamogordo was 23,535 in 1975 and has since grown to approximately 35,000 (2000 census). The economy of Alamogordo depends largely upon HAFB and other military installations in the area. Approximately 5,500 people live at HAFB.

2.2 CLIMATE

The climate in the Tularosa Basin is arid with low annual rainfall and low relative humidity. The surrounding mountain ranges greatly influence the local weather. They modify approaching weather systems and provide orographic lifting which produces summer thunderstorms.

Holloman AFB receives most of its total annual rainfall from thunderstorm activity from May through October. Winter is generally dry and is characterized by clear skies and erratic snowfall. The period from March through May is characterized by strong southerly wind flow and periods of blowing dust and sand. Mean annual precipitation is 7.9 in. The mean annual lake evaporation rate, commonly used as an estimate of the mean annual evapotranspiration rate, is approximately 67 in. per year. As presented by Huff in the 49th Annual New Mexico Water Conference Proceedings (New Mexico Water Resources Research Institute [NMWRRI], 2005), approximately 30,000 acre-ft/year of groundwater left the Tularosa basin through evapotranspiration under 1995 conditions.

2.3 TOPOGRAPHY

SS-39 is located on the northern slope of the Lost River Drainage Basin. The slope has an overall moderately southward dipping slope towards the Lost River Drainage Basin. Moderately to steeply incised swales and gullies cut into the slope east, west, and immediately downgradient of Building 1176. At the base of the slope, the topography becomes flat with a very slight southerly dip towards the center

of the Lost River drainage basin. Steeply incised rills and drainage swales are present throughout the central portion of the slope, trending in a north-south orientation toward the Lost River drainage basin. Vegetation in the central portion of the slope consists of salt cedars, shrubs, grasses, and cacti. Near the base of the slope, vegetation primarily consists of grass and shrubs until the edge of the Lost River Drainage Basin, after which no vegetation is present. The edge of the basin typically marks the high water level within the drainage basin during and slightly after heavy rainstorms. An unpaved service road parallels the basin edge providing access to the lower portion of the site.

2.4 SURFACE WATER

No surface water bodies are present within SS-39. During heavy rain events and the rainy season, surface water runoff collects within the Lost River Drainage Basin. Numerous swales and gullies emanate from and cross SS-39.

2.5 GEOLOGY

Site-specific geologic information was obtained from lithologic data collected during previous subsurface investigations and from the Supplemental RFI (HGL, 2007). Based on lithologic logging activities, the soils underlying Building 1176 and SS-39 are composed primarily of well-sorted, fine-grained sand. To the west, in the vicinity of MW39-02, two 8 ft sequences of silt separated by a 2 ft thick sand lens were encountered to approximately 18 ft below ground surface (bgs). North of Building 1176, in the vicinity of MW39-01, an 8 ft thick sequence of silty sand was encountered at the surface. Both the silt and silty sand units appear to interfinger the sand unit. Within the Lost River Drainage Basin, sands with clay and interbedded clay lenses were encountered at the surface to approximately 6 ft bgs.

2.6 HYDROGEOLOGY

Groundwater occurs beneath SS-39 in a shallow unconfined aquifer at depths ranging from 18 ft bgs at the top of the northern slope to less than 0.5 ft bgs in the Lost River Drainage Basin. Groundwater potentiometric surface maps generated from water level data obtained during the July 2010 and January 2011 Long Term Monitoring (LTM) sampling events are provided in Figures 2-1 and 2-2. During both of these measurement events the water levels in clustered shallow/deep wells MW-39-06 and MW-39-06D show a downward gradient in the shallow aquifer. However, upward gradients have also been observed (e.g., during the July 2006 sampling event the groundwater elevations of MW-39-06 and MW-39-06D were 4031.30 ft msl and 4033.89 ft msl). The change in groundwater gradient between the clustered

wells may be attributable to episodic rainfall events and occasional flooding of the Lost River Drainage Basin.

The hydraulic conductivity of the shallow groundwater aquifer at SS-39 was investigated by performing slug tests in site wells installed during the RFI. The following test results were presented in the Supplemental RFI (HGL, 2007):

- MW39-01 - 1.24 ft/day;
- MW39-02 - 2.92 ft/day;
- MW39-03 - 2.51 ft/day; and
- MW39-04 - 0.97 ft/day

Using an average hydraulic conductivity of 1.91 ft/day, a hydraulic gradient of 0.0047 ft/ft (2003 LTM event), and an estimated porosity of 30 percent for the sandy soil, the linear groundwater flow velocity across SS-39 was estimated to be 0.029 ft/day, or 11 ft/year.

This Page Intentionally Left Blank

3.0 PREVIOIUS SITE INVESTIGATIONS

Investigations conducted prior to the 2010 ACM site investigation at SS-39 include:

1. Phase I Remedial Investigation (RI) (1991);
2. Phase II RFI (1993);
3. Supplemental Groundwater Investigation (1998);
4. Supplemental RFI Activities (2006); and
5. Groundwater LTM (1997 to 2011).

The soil analytical results from all previous investigations are provided in chronological order in Tables 3-1 through 3-9. The historical soil results shown in Tables 3-1 through 3-5 were taken from the previous investigation reports listed above and have been formatted (see table footnotes) to show exceedances of the NMED Soil Screening Levels (SSLs) for residential, commercial/industrial, and the construction worker exposure pathways (Table A-1, NMED, 2009). These same soil results are re-presented in Tables 3-6 through 3-9, but only those historical tables that include chemicals sufficiently volatile for VI [e.g., volatile organic compounds (VOCs), mercury] are included; these tables have been formatted to show exceedances of the calculated SSLs for the VI exposure pathway. The VI SSLs were calculated following current U.S. Environmental Protection Agency (EPA) methodology (EPA, 2004) in accordance with NMED guidance (NMED, 2009). The historical groundwater analytical results from all previous investigations are provided in chronological order in Tables 3-10 through 3-14. The analytical results have been formatted to show exceedances of the NMED residential tap water SLs (Table A-1, NMED, 2009) or EPA Regional Screening Levels (RSLs) or Maximum Contaminant Levels (MCLs) (EPA, 2011) for residential tap water, and exceedances of the VI from groundwater to indoor air exposure pathways default SLs (EPA, 2002).

An evaluation of HAFB background values for metals in soil and groundwater showed that the SSLs for soil and SLs for groundwater represented higher concentration levels than background for all metals in soil and for all metals except arsenic in groundwater. For arsenic in groundwater, the NMED SL for tap water is 0.448 µg/L; the HAFB background is 10 µg/L, but is noted to be based on the EPA MCL. Because background was lower than the SSLs and SLs (with the noted exception for arsenic), background was not included in the analytical tables discussed above.

The locations of all historical soil samples are shown on Figure 3-1. It is noted that the 2010 ACM site investigation soil sample locations are also shown on Figure 3-1. As shown in the figure legend, the timing of the sampling event is noted by the color of the sample location symbol on the figure.

The locations of all historical groundwater samples from permanent wells and non-well sample locations [e.g., borehole or direct push technology (DPT) samples], including new well locations installed during the 2010 ACM investigation, are shown on Figure 3-2. In addition, groundwater grab sample locations associated with bore holes placed within the Lost River Drainage Basin immediately south of SS-39 (locations GW-19, GW-22, GW-24, and GW-26) are shown on Figure 3-2. These groundwater grab samples were collected as part of the Area of Concern (AOC) U investigation in March 2011 and provide lateral control on the nature and extent of current groundwater impacts at SS-39.

A general discussion of the previous investigations is presented below. The analytical results for all investigations are discussed and evaluated in Section 4.

3.1 PHASE I REMEDIAL INVESTIGATION

The 1991 Phase I RI consisted of completing seven soil borings and the installation and sampling of four groundwater monitoring wells, MW-39-01 through MW-39-04. During the Phase I RI, two soil borings were completed with a DPT drill rig, five soil borings were completed with a hand auger, and the four groundwater monitoring wells were installed using a hollow stem auger (HSA) drill rig.

The DPT soil borings, SB-39-01 and SB-39-02, were located at the ends of the drainage troughs for Building 1176. Hand auger borings, HA-39-04 and HA-39-05, were located in a sump at the end of a third drainage trough for Building 1176 on the east side of the Building. Hand auger boring HA-39-01 was located in the outfall for the oxidizer spill drainpipe. Hand auger boring HA-39-02 was located outside of the discharge box for the propellant spill drainpipe, and HA-39-03 is located inside the discharge box. The soil analyses included VOCs, total metals, and petroleum hydrocarbons. Since the Alpha Pad is constructed of structural concrete and associated with active operations, no drilling was completed through the pad.

One monitoring well, MW-39-01, was installed upgradient of the site. The remaining wells were installed downgradient of the outfall of the Oxidizer Spill Drainpipe (MW-39-04), the Discharge Box (MW-39-03),

and Building 1176 (MW-39-02). The soil boring and monitoring well locations are shown on Figures 3-1 and 3-2.

Soil analytical results obtained during the Phase I RI are presented in Tables 3-1 and 3-6, and groundwater results are presented in Table 3-10.

3.2 PHASE II RCRA FACILITY INVESTIGATION

A Phase II RFI was performed at SS-39 to further delineate the contamination previously identified at the site during the Phase I RFI (Radian, 1994). For the investigation, soil samples were collected from eight borings located along the drainage ditches below the oxidizer and propellant outfalls, two borings at Building 1176 sumps, and five hand auger borings. The collected samples were analyzed for semi-volatile organic compounds (SVOCs) and metals.

Groundwater samples were collected from 15 temporary sampling locations using DPT methods, and screened in the field for chlorinated compounds. Eight groundwater samples were submitted to an off-site laboratory for confirmatory analysis. The site was added to the LTM program in 1997 and LTM has been conducted since 1997 in conjunction with LTM at the other subject sites.

Soil analytical results obtained during the Phase II RFI are presented in Tables 3-2, 3-3, and 3-7, and groundwater results are presented in Table 3-11.

3.3 SUPPLEMENTAL GROUNDWATER INVESTIGATION

In response to an NMED request, a supplemental groundwater investigation was performed using DPT methods in May and June 1998. The purpose of the additional investigation was to delineate the extent of TCE previously detected during the Phase II RFI. Sixteen DPT or hand-augered borings were installed 3 ft below the water table (encountered between 1 to 18 ft bgs). The groundwater samples were collected and analyzed for VOCs. Soil samples were collected for lithologic logging and visual inspection. Based on the boring logs, depth to water in the DPT locations closest to the Lost River Drainage Basin is very shallow. Groundwater analytical results obtained during the Supplemental Groundwater Investigation are presented in Table 3-12.

3.4 GROUNDWATER LONG TERM MONITORING, 1997 THROUGH 2005

LTM of groundwater began in 1997 and continued on a biennial basis until December 2005. After submittal of the Supplemental RFI work plan (HGL, 2005) and the response to Notice of Deficiency (NOD) (HGL, 2006a), NMED required groundwater LTM activities be conducted on a semi-annual basis (NMED, 2006b). Groundwater analytical results obtained during the initial LTM program are presented in Table 3-13.

The 2003 LTM report recommended continued sampling since only 4 rounds of monitoring have been conducted. During the 2005 LTM event, the target analyte list was expanded to include total dissolved solids (TDS).

Following review of the 2003 LTM report and previous site investigation reports, NMED determined that additional investigation and LTM monitoring was required at SS-39. NMED also requested additional subsurface soil sampling to be conducted to address a lack of UDMH and aniline analytical data during previous investigations (NMED, 2006b). During the February 2006 NMED site visit, NMED requested the collection and analysis of sediment from the test track concrete collection basin (SWMU 167) located at the southern end of the test track (HGL, 2006b).

3.5 SUPPLEMENTAL RFI ACTIVITIES

Supplemental RFI activities were conducted at SS-39 between May and July 2006. All field sampling activities were conducted in general accordance with the NMED approved work plan (HGL, 2005) as modified in the response to NOD (HGL, 2006a) and requests made during the February 2006 NMED site visit (HGL, 2006b).

Sediment and soil analytical results obtained during the Supplemental RFI are presented in Tables 3-4, 3-5, 3-8, and 3-9, and groundwater results are presented in Table 3-14. Detailed descriptions of the Supplemental RFI field activities conducted at SS-39 are discussed below.

3.5.1 Sediment Sampling

A sediment grab sample was collected from the Concrete Collection Basin (SWMU 167) using a disposable polyethylene sample trowel. The collected sample was submitted for SVOCs, UDMH, and RCRA metals. No staining, unusual odors, or photoionization detector (PID) readings were noted in the sediment. Aniline and UDMH were not detected in the sediment sample.

3.5.2 Subsurface Soil Sampling

A subsurface soil investigation using a DPT drill rig was conducted to address the UDMH and aniline soil quality data gap identified by NMED in the supplemental work plan NOD (NMED, 2006a). As discussed in the Response to NOD (HGL, 2006a), supplemental RFI soil borings were located immediately adjacent to former borings SB3901, SB3902, HA3901 and HA3902 and advanced to a maximum depth of 10 ft bgs. In addition, a separate boring, designated SB39-17, was installed immediately downgradient of the western drainage trough (SWMU 181). The locations of the supplemental RFI borings are depicted on Figure 3-1.

As requested by NMED (NMED, 2006a), specific soil intervals in each boring were collected and analyzed for UDMH, aniline, and RCRA metals. Subsurface soil samples were collected from 2 to 4 ft bgs and 8 to 10 ft bgs from all of the borings except in borings HA3901R and HA3902R, where borehole collapse resulted in the deeper samples being collected from a shallower soil interval (i.e., 8 to 8.5 ft bgs in HA39-01R and 8 to 9 ft bgs in HA39-02R). Subsurface soil samples collected from 2 to 4 ft bgs and 8 to 10 ft bgs were also collected from boring SB39-17. UDMH and aniline were not detected in the soil samples.

3.5.3 Permanent Monitoring Wells

Four permanent monitoring wells, designated as MW-39-05, MW-39-06, MW-39-06D, and MW-39-07 were installed near the edge of the Lost River Drainage Basin in accordance with the work plan (HGL, 2005). The four wells were installed in June 2006 using a DPT drill rig fitted with 4 ¼ HSAs. Monitoring wells MW-39-05 through MW-39-07 were drilled to maximum depths ranging between 13 and 14 ft bgs, allowing for the screened portions of the wells to be positioned straddling the SS-39 water table. Monitoring well MW-39-06D was drilled to a maximum depth corresponding to 11 ft below the bottom of the MW-39-06 well (i.e., 25 fet bgs). The screened portion of MW-39-06D was positioned below MW-39-06 to evaluate the potential downward vertical migration of the TCE directly downgradient of the potential source area. The locations of the four monitoring wells are depicted on Figure 3-2. All four wells were constructed of 2-in. diameter, 10-ft long, 0.010-slotted, Schedule 40 polyvinyl chloride (PVC) well screen, Schedule 40 PVC riser pipe.

3.5.4 Pre-Pack Temporary Wells

In addition to the newly installed permanent monitoring wells, NMED required the installation of monitoring wells within the Lost River Drainage Basin to define the southern extent of the TCE plume (NMED, 2006a). The Lost River Drainage Basin is subject to periodic flooding after large rain events. Repeated flooding most likely compromises the long term structural integrity of monitoring wells installed within the basin. Additionally, the United States Air Force (USAF) and the United States Army

Corps of Engineers (USACE) do not allow any permanent structures to be constructed within the Lost River Drainage Basin (Livingston, 2006). Consequently, as discussed and agreed to by NMED during the February 2006 site visit, five pre-pack monitoring wells, designated MW-39-08 through MW-39-12, were utilized to collect groundwater samples from within the Lost River Drainage Basin during the Supplemental RFI and January 2007 groundwater compliance LTM event. The use of pre-pack wells allowed for the collection of groundwater samples from designated locations within the drainage basin while providing a temporary sampling location that helped minimize groundwater sample turbidity. The locations of the pre-pack monitoring wells are depicted on Figure 3-2.

The pre-pack monitoring wells were constructed of a 2-in. diameter, 5-ft long, 0.010-slotted Schedule 40 PVC well screen wrapped with a stainless steel wire mesh containing a 0.25-in. thick filter pack. The screen is capped with a flush-jointed well cap and attached to a 2-in. diameter, 5-ft long Schedule 40 PVC riser pipe. The pre-pack wells were installed through an open borehole drilled using a 3-in., decontaminated stainless steel hand auger. The hand auger borings were completed to maximum depths ranging between 5 to 10 ft bgs during the supplemental RFI and January 2007 LTM event. Once groundwater sampling activities were completed, the pre-pack wells were removed from the subsurface, decontaminated, and placed in dedicated storage containers. The abandoned boreholes were backfilled with the sediment removed during borehole advancement.

3.5.5 Groundwater Sampling

Groundwater sampling was conducted in July 2006 as part of the Supplemental RFI in accordance with the work plan. Additionally, a semi-annual groundwater compliance monitoring was also conducted in January 2007 as agreed upon in the response to the NOD (HGL, 2006a and NMED, 2007). As specified in the work plan and the response to the NOD, the SS-39 TCE plume monitoring well network consisted of existing wells MW-39-02 and MW-39-03, newly installed permanent wells MW-39-05, MW-39-06, MW-39-06D, and MW-39-07; and pre-pack wells MW-39-08 through MW-39-12. Groundwater samples were collected and analyzed by an off-site laboratory for VOCs, RCRA metals (total and dissolved), perchlorate, and TDS. During the July 2006 Supplemental RFI groundwater sampling event, groundwater samples were also analyzed for UDMH and aniline. Since UDMH and aniline were not detected in the July 2006 groundwater samples, NMED agreed to suspend UDMH and aniline analyses for the January 2007 sampling event (HGL, 2006c).

At the request of NMED, groundwater samples from SS-39 were analyzed for perchlorate and TDS. During the January 2007 LTM event, TDS concentrations in the groundwater samples were very high and

resulted in high perchlorate method detection limits (i.e., 75 µg/L to 600 µg/L). Perchlorate was not detected above these elevated detection limits during the January 2007 LTM event.

3.6 GROUNDWATER LONG TERM MONITORING, 2006 THROUGH 2011

LTM for groundwater began in 1997 and was conducted biennially for VOCs and TDS at the four existing well through December 2005 (see Section 3.3.4, Table 3-13). After the installation of nine new wells during Supplemental RFI, semi-annual LTM was conducted at 10 wells beginning in July 2006 (see Section 3.5.5, Table 3-14). The samples were analyzed for VOCs, perchlorate, total and dissolved RCRA metals, UDMH, aniline, and TDS. NMED agreed to suspend analyses for aniline and UDMH in groundwater at SS-39 following completion of the 2007 and 2008 sampling events (HGL, 2008).

Semi-annual LTM for groundwater is ongoing with the most recent event conducted in July 2011 (as of the date of this report). Four new wells were installed in November 2010 as part of the ACM site investigation and were incorporated into the LTM program for a total of 17 well locations (Tetra Tech, 2011). The wells are analyzed for VOCs, SVOCs, perchlorate, total petroleum hydrocarbons (TPH)-diesel range organics (DRO), TPH-gasoline range organics (GRO), metals, TDS, and gross alpha/beta. It should be noted that five pre-pack monitoring wells, designated MW39-08 through MW39-12 (Figure 3-2), are utilized to collect groundwater samples from within the Lost River Drainage Basin during each LTM sampling event.

This Page Intentionally Left Blank

4.0 ACCELERATED CORRECTIVE MEASURES

The following sections present the ACM site investigation methods; identify the cleanup criteria; summarize all site investigation results; and evaluates all the data with respect to the identified cleanup criteria. The data have been evaluated with regard for both human health and ecological risks. Completion of these steps has resulted in identification of the chemicals, media, and pathways of concern, and determination of the areas and volumes of contaminated media that must be addressed to meet the site closure strategy. Finally, the rational for cleanup and the recommended remedial action are described. Discussion of the activities required to implement the remedy are provided in Section 5 as the corrective measures work plan.

The preferred closure strategy for RCRA sites at HAFB is to support unrestricted future land use (i.e., closure without controls) where technically and economically feasible. Following this direction, this ACM addendum for SS-39 focuses on data evaluation and remedial actions that will support future residential use. As discussed below, because the residential cleanup criteria for all chemicals detected in environmental media at SS-39 are the lowest for all potential human receptors (i.e., resident, commercial/industrial, and construction workers), the data evaluation and remedial strategy for a future resident ensures that the most sensitive human receptor is identified.

4.1 ACM SITE CHARACTERIZATION METHODS

The 2010 ACM site investigation utilized a combination of DPT subsurface soil investigation in the drainage swale downslope of SWMUs 167 and 179 and around the sumps at SWMU 177, and installation of permanent groundwater monitoring wells hydraulically downgradient of SWMUs 181 and 177 to better understand the groundwater plume. These sampling activities were selected based on assessment of all previous site investigation data (see Section 3.0) and were presented in the ACM Work Plan (Tetra Tech, 2009).

Soil sampling was conducted on November 6, 7, and 8, 2010, using a DPT rig to drive 5-ft long, 2.25-in. diameter steel sample barrels fitted with sample liners into the subsurface. Continuous sampling was conducted at 16 locations, identified as SS39-DPT-01 through SS39-DPT -16 (subsequently referred to as DPT-01 through DPT-16) from the ground surface to total depth at each location. The maximum depth of sampling was 12 ft bgs in proximity to the sumps at SWMU 177. Each soil core was field screened using a PID and samples were collected from selected 2-ft long intervals for laboratory analyses. All soil samples were collected in accordance with applicable SOPs and the required quality assurance (QA)/quality control

(QC) samples were collected and analyzed. Copies of the boring logs, sampling logs, and chain of custody forms are provided in Appendix A. All new soil sample locations were surveyed for location and elevation by a state-licensed surveyor and the survey data are provided in Appendix B.

A Geoprobe® drilling rig was used on November 7 and 8, 2010, to install four new monitoring wells identified as MW39-13 through MW39-16. The bore holes were driven using 3.25-in. diameter push rods and an expendable stainless steel drive point. All wells were completed using 2-in. inside diameter PVC well screens and riser pipe. Well screens consisted of factory slotted, 0.010-in. slot pipe fitted with threaded bottom caps and threaded riser pipe. The annulus around each well was completed with 20/30 size clean filter pack. A 3-ft thick bentonite seal was placed on top of the filter pack and the remainder of the well annulus was filled with a cement-bentonite grout. The wells were completed above grade and protected with a steel protective steel casing with a locking, weather-tight cap. The wells were installed and developed in accordance with applicable SOPs. All new wells were surveyed for location and elevation by a state-licensed surveyor. Copies of the well boring, completion, and development logs are provided in Appendix A. A copy of the field log book is also provided in Appendix A.

4.2 ACM CLEANUP CRITERIA

The screening of sediment, soil, and groundwater for contamination representing potential human health risk was conducted in accordance with *Holloman Air Force Base, Hazardous Waste Facility Permit No. NM6572124422, Appendix 4-F, Actions Levels and Cleanup Levels* (NMED, 2004). All laboratory samples from all site investigation events (i.e., 1991 through 2010) were screened using the most current available criteria and guidance provided in the *Technical Background Document for Development of Soil Screening Levels, Revision 5.0* (NMED, 2009). As directed in this guidance, outside sources of screening levels were used as necessary.

NMED has not published SLs for assessing risk via indoor air VI from contaminated sediment, soil, or groundwater. In accordance with the above referenced guidance (NMED, 2009), the latest EPA guidance (EPA, 2004) was consulted. For soil at SS-39, the latest versions of EPA's Johnson & Ettinger model spreadsheets were used to back-calculate VI screening levels for both 1e-6 and 1e-5 indoor air risk levels based on the bulk soil sample results. The model assumptions regarding the physical properties of the subsurface soil were deemed reasonable for the site's physical setting. The model assumptions for vapor transport into a future occupied structure were accepted as a plausible scenario for future residential site use. Because the soil samples assessed for VI were collected at depths above the water table, the default

value for soil moisture was used. The model lookup inputs for a 'sandy loam' soil were selected to represent SS-39 based on the predominance of fine grained sand and silt with some clay described on the site boring logs. The fraction of organic carbon in soil used in the VI modeling was based on the recommended default value (i.e., 0.2 percent) because site-specific data are not available (EPA, 2004). The VI modeling results are provided in Appendix C. Due to simplifications and conservative assumptions used in the modeling, and in accordance with suggestions in the guidance document (EPA, 2002), the 1e-5 VI screening levels were selected as cleanup levels. For groundwater, EPA guidance document lookup values for 1e-5 indoor air risk levels (EPA, 2002) were selected as the cleanup levels.

Specifically, the following regulatory criteria were used to evaluate the analytical data.

Soil/Sediment, Direct Contact

- NMED residential, industrial and construction worker SSLs (NMED, 2009).
- EPA RSLs (EPA Reg VI, June, 2011), if NMED SSLs were not available (NMED, 2004). The EPA RSLs for carcinogens were multiplied by ten to provide a 1e-5 risk level used by NMED.
- EPA Radionuclide SSLs (EPA, 2000).

Soil/Sediment, Vapor Intrusion

- Johnson & Ettinger model to calculate 1E-5 risk level for indoor air from bulk soil based EPA guidance (EPA, 2004).

Groundwater, Direct Contact

- NMED residential tap water SLs (NMED, 2009).
- EPA Tap Water RSLs or MCLs (EPA, 2011), if NMED SLs not available (NMED, 2004).

Groundwater, Vapor Intrusion

- Target Groundwater Concentrations based on EPA generic SLs for 1E-5 indoor risk level (EPA, 2002).

Risk-based residential screening levels, exposure pathways, and exposure routes found in the above-referenced guidance documents were deemed applicable and protective for future use of the site and are protective for current site use (i.e., industrial). An evaluation of HAFB background values for metals in soil and groundwater showed that the soil SSLs and groundwater SLs represent higher concentration levels than background for all metals in soil and for all metals in groundwater with the exception of

arsenic (see Section 3.1). Therefore, the residential screening criteria derived from the above listed references were selected as cleanup levels for the environmental media at SS-39. As discussed in the following sections, these criteria are provided for the detected chemicals that are listed in each of the data screening tables presented in this report (i.e., Tables 3-1 through 3-14 and Table 4-1 through 4-3).

4.3 INVESTIGATION RESULTS AND DATA EVALUATION

The following sections provides the results of the 2010 ACM site investigation and presents an evaluation of all site investigation data collected at SS-39.

4.3.1 Soil Evaluation

As described in the ACM Work Plan (Tetra Tech, 2009) and summarized in Section 4.1, soil sampling was conducted at a total of 16 locations during the 2010 ACM site investigation. Soil samples were collected at multiple depths at each location. The soil investigation focused on soils around the two sumps at the end of the two drainage troughs running from the south side of Building 1176, and on the drainage swale running south of the Propellant and Oxidizer Spill drainage pipe discharge areas. The results for all chemicals detected in the 2010 soil samples are presented in Table 4-1, and all chemicals detected with sufficient volatility for potential vapor intrusion are presented in Table 4-2. As was provided for the historical soil samples (Tables 3-1 through 3-9), the 2010 data tables were formatted to show exceedances of the direct contact SSLs (Table 4-1) and the VI SSLs (Table 4-2). Tables including all 2010 analytical results are provided in Appendix D.

The soil sample results for chemicals that exceeded residential SSLs for direct contact and VI risk SSLs for indoor air are shown on Figures 4-1 and 4-2. It is noted that all historical soil data and the 2010 ACM site investigation data are shown on Figures 4-1 and 4-2 for all chemicals that exceed the risk-based SSLs for each sample location where the analyses were conducted. As shown in the figure legend, the sampling event for each location is noted by the color of the sample location symbol on the figure.

Evaluation of the data presented in Tables 3-1 through 3-5 and Table 4-1, and presented on Figures 4-1 and 4-2, shows that the chemicals detected in soil that are listed below exceeded residential direct contact SSLs at one or more locations at SS-39:

- VOCs – tetrachloroethene (PCE) ;
- Petroleum Hydrocarbons – total recoverable petroleum hydrocarbons (TRPH) and TPH; and

- Metals – arsenic, chromium, lead.

Evaluation of the data presented in Tables 3-6 through 3-9 and Table 4-2, and presented on Figures 4-1 and 4-2, shows that the chemicals detected in soil listed below exceeded vapor intrusion 1e-5 risk SSLs for indoor air at one or more locations at SS-39:

- VOCs – 1,1,1-trichlroethane, 1,1,2-trichloroethane, 1,2-dichloroethane, chloromethane, methylene chloride, PCE, TCE.

4.3.2 Groundwater Evaluation

As described in the ACM Work Plan (Tetra Tech, 2009) and summarized in Section 4.1, four new groundwater monitoring wells were installed during the 2010 ACM site investigation. Subsequently, all existing (MW-1 through MW-12) and new (MW-13 through MW-16) groundwater sample locations were sampled in July 2011 as part of the ongoing LTM program (see Section 3.6). The results for all chemicals detected in groundwater during the July 2008 through July 2011 LTM sample events are presented in Table 4-1. As was provided for the historical groundwater samples (Tables 3-10 through 3-14), the 2010 data table was formatted to show exceedances of the groundwater SLs or RSLs for residential tap water and for the vapor intrusion from groundwater to indoor air exposure pathways.

Tables including all LTM analytical results for July 2008 through January 2011 sampling events are provided in the *Final Long-Term Monitoring Report, July 2010 – January 2011 for DP-30/SD-33 (SWMU 141), and SS-39 (SWMUs 165, 177, 179, and 181), Holloman Air Force Base, New Mexico* (Tetra Tech, 2011). All July 2011 LTM results are provided in Appendix D.

Evaluation of the data presented in Tables 3-10 through 3-14 and Table 4-2 shows that the chemicals listed below exceeded residential tap water SLs at one or more location at SS-39:

- VOCs – carbon tetrachloride, chloroform, PCE, TCE, 1,1-dichloroethane, vinyl chloride, naphthalene;
- Metals – arsenic, cadmium, lead, selenium; and
- Others – perchlorate, nitrate/nitrite.

Of the above listed chemicals that exceed the tap water SLs, only carbon tetrachloride, chloroform, TCE, arsenic, and lead have been detected at multiple well locations and across multiple sampling events. These chemicals represent significant risk if groundwater was used as tap water, and the July 2011 sample

results for these chemicals have been plotted on Figure 4-3. Of the above listed chemicals, 1,1-dichloroethane, PCE, vinyl chloride, naphthalene, cadmium, and selenium have been infrequently detected across the site and across multiple sampling events. 1,1-dichloroethane was detected and exceeded the tap water SL in a 1993 groundwater sample from location 177-H03 (see Table 3-11) that lies directly down slope of the sump located off the southeast corner of Building 1176. Well MW39-13 was installed near this location in 2010 and has been sampled twice (see Table 4-3), but 1,1-dichloroethane was not detected. PCE was detected in well MW39-02 in 1991 at a concentration of 1.1 µg/L and in one of eight 1993 borehole samples, location 177-H03, at a concentration of 2.19 µg/L. PCE was subsequently detected at new well MW39-13 located down slope of the sump located off the southeast corner of Building 1176 (approximately between to two historical detection locations; see Figure 3-2). PCE was detected during both the January and July 2011 sampling events conducted at MW39-13 at a maximum concentration of 2.3 µg/L (verses the tap water SL of 1.08 µg/L), but was not detected at any other well location. Vinyl chloride was detected and exceeded the tap water SL in a 1993 groundwater sample from location 177-H02 that is located down slope from Building 1176 and near the Lost River Basin shoreline. Wells MW39-06/06D lie upgradient and wells MW39-08 and -09 lie downgradient of 177-H02 and have been sampled multiple times (see Table 4-3), but vinyl chloride has not been detected in the groundwater. Naphthalene has been included in all LTM groundwater analyses since July 2008 (see Table 4-3). This chemical was detected at well MW39-08 at an estimated concentration of 2.3 µg/L in July 2008 (compared to the SL of 1.43 µg/L), but has not been detected in this well or any other site well since that time. Cadmium and selenium both exceeded the tap water SL at well MW39-12 in the sample collected during July 2008. Neither metal has exceeded during the subsequent six sample events at this well, nor has either metal exceeded at any other site well during the LTM (see Table 4-3). Based on the above observations, 1,1-dichloroethane, PCE, vinyl chloride, naphthalene, cadmium, and selenium are not considered significant tap water risk components for groundwater at SS-39 and are not shown on Figure 4-3.

Evaluation of the data presented in Tables 3-10 through 3-14 and Table 4-2 shows that the chemicals listed below exceeded the VI 1e-5 risk SLs for groundwater to indoor air at one or more locations at SS-39:

- VOCs – bromoform, carbon tetrachloride, TCE, vinyl chloride.

Of these four VOCs that exceeded VI SLs, only TCE was observed to exceed the VI SLs at multiple sampling locations on multiple sample dates. The July 2011 sampling results for TCE are shown on Figure 4-3. Bromoform was only detected and exceeded the vapor intrusion SL in downgradient well

MW39-09 and only in July 2006; it has not been detected in this or any other well since that time (see Tables 3-14 and 4-3). Carbon tetrachloride has been consistently detected at upgradient well MW39-02, located near the sump to the southwest of Building 1176, and at downgradient well MW39-06. Carbon tetrachloride exceeded the VI SL in 1991 and 1997, but has not exceeded the VI SL since that time (but has exceeded the tap water SL). As discussed above, vinyl chloride was detected in 1993 but has not been detected during any LTM sampling event at any well. Based on the above observations, bromoform, carbon tetrachloride, and vinyl chloride are not considered significant VI risk components for groundwater at SS-39; bromoform and vinyl chloride are not shown on Figure 4-3.

Based on the preceding data evaluations, the July 2011 LTM sampling results for all chemicals that have been shown to represent significant risk for direct contact and for VI risk from groundwater to indoor air are shown on Figure 4-3. Due to their low frequency of detection (see above), 1,1-dichloroethane, bromoform, vinyl chloride, naphthalene, cadmium, and selenium are not shown on the figure. Nitrate/nitrite is not shown on the figure because it was analyzed in wells MW39-01 through MW39-04 only in 1991. Nitrate/nitrite exceeded in only well MW39-02 located near the sump that lies to the southwest of Building 1176.

4.4 MEDIA AND PATHWAYS OF CONCERN FOR HUMAN HEALTH

The data evaluation presented in the Section 4.3 demonstrates that concentrations of chemicals in soil and groundwater at SS-39 exceed the risk-based SSLs and SLs; therefore, both soil and groundwater are media of concern. Sediment sampled in the Concrete Collection Basin (SWMU 167) and soils collected along the drainage swales below the outfalls of the propellant and oxidizer spill pipe discharges were evaluated using the SSLs for human exposure to soils.

4.4.1 Soil Pathways

Unacceptable risk from soil at SS-39 may occur via two pathways:

1) Direct human contact with soil; and
2) Human occupation of buildings constructed near contaminated soil via VI.

For direct contact risk evaluation, soil data Tables 3-1 through 3-5 and 4-1 provide SSLs for the resident, commercial/industrial, and construction worker receptors and identified the chemicals and locations that exceeded these criteria. Review of the tables shows that for all chemicals that exceeded one or more of

these criteria, the residential SSL was the lowest of all receptors; thus, identification of chemicals that exceed residential criteria, by default, identifies risks for all of the listed human receptors.

For VI evaluation, the soil data tables provide SSLs for both the 1e-6 and 1e-5 indoor air risk levels for residential receptors. Due to assumptions and simplifications in the modeling used to derive VI SSLs based on bulk soil analytical data, the 1e-5 risk level is deemed protective.

4.4.2 Groundwater Pathways

The data evaluation presented in Section 4.3 shows that human health risks exist at SS-39 from exposure to chemicals in groundwater. Chemicals in groundwater have been shown to exceed both the residential tap water SLs (or MCLs) and the SLs for groundwater to indoor air VI risk. The residential tap water use pathway is deemed not applicable for SS-39 for the following reasons:

- There is no current groundwater use at the site or vicinity
- The data tables show that groundwater at the site is high in TDS (Tables 3-13, 3-14, and 4-3). High TDS is persistent over the entire LTM monitoring period and for all areas of the site (all well locations). Because TDS exceeds 10,000 mg/L, the groundwater is not considered a potable groundwater source and risk via this pathway is incomplete.

Unacceptable risk from groundwater at SS-39 may occur via one pathway:

1) Human occupation of buildings constructed near contaminated groundwater via vapor intrusion.

4.5 MEDIA AND PATHWAYS OF CONCERN FOR ECOLOGIAL RISK

The results of a HAFB site-wide ecological risk assessment prepared by Sirrine Environmental Consultants were included in the *Risk Assessment Report for the Remedial Investigation, Volume IV* of the RI Report (Radian, 1992). Both terrestrial and aquatic risk characterizations were conducted using ecological quotients (EQs = site specific or modeled intake concentrations that were compared to selected effect levels for soils or water quality criteria for groundwater). In the *Phase I RCRA Facility Investigation Report, Volume II* (Radian, 1994), the ecological risk assessment was updated. At SS-39, analytical data from terrestrial biota samples collected at the site were used to evaluate environmental effects. Aquatic risk was evaluated using measured surface water data according to the methodology described in Appendix K of the 1992 risk assessment (Radian, 1992).

The Supplemental RCRA Facility Investigation Report (HGL, 2007) concluded that surface soil samples, vegetation samples, and jackrabbit tissue, blood and urine samples were collected in the area, and surface water samples were collected from the Lost River Drainage Basin to support an ecological risk assessment. The assessment concluded that there was no unacceptable risk to ecological receptors (Radian, 1994).

4.6 AREAS AND VOLUMES OF CONTAMINATION

4.6.1 Soil Contamination

Chemicals in soil that exceed the SSLs, as shown in Tables 3-1 through 3-9, 4-1, and 4-2 and plotted on Figures 4-1 and 4-2, define the locations and chemicals at SS-39 that represent contaminated soil. In general, contaminated soil has been identified at four locations/facilities at SS-39, as follows:

- Sediment contained within the Concrete Collection Basin (SWMU 167)
  - lead
- Sediment contained with the Discharge Box (SWMU 179) and soil/sediment adjacent to the box
  - TPH, arsenic, lead inside the box
  - Methylene chloride outside the box
- Soil at the outfall of the Oxidizer spill pipe discharge
  - Methylene chloride
- Sediment in and adjacent to the three sumps (SWMU 177) associated with Building 1176
  - Sump to the southwest of the building – arsenic
  - Sump to the south of the building – PCE, TPH, arsenic, chromium, and lead
  - Sump to the east of the building – TPH, arsenic

As indicated on Figures 4-1 and 4-2, the areas of soil contamination are associated with point source historical discharge locations (sumps, outfalls). Step out sampling locations conducted during various site investigations show the lateral and vertical extent of impacts to soil are localized, generally only a few feet at each location. Figures 4-4 and 4-5 show the areas of soil contamination and the estimated dimensions and volumes of each area are listed in Table 4-4.

It is noted that detections of methylene chloride in the 1991 soil samples was associated with laboratory blank sample detection of methylene chloride for some samples (Radian 1992). Methylene chloride is

also a common laboratory contaminant. Due to its solvent and cleaning properties, it is reasonable to assume that this chemical was used at SS-39. Thus, because the samples from locations HA-39-01 and HA-39-02 were not associated with laboratory blank contamination, methylene chloride is considered a soil contaminant at these locations.

It is also noted that low concentrations of TCE (0.003 to 0.0098 mg/kg) detected in soil samples collected from depths of 3 to 5 and 6 to 8 ft bgs at sample location DPT-04 exceeded the SSL for VI. This sample location lies far downslope of the contaminant release sites at SS-39 (e.g., sumps, outfalls). This sample location lies within the footprint of the groundwater TCE plume (see below) and groundwater is typically 5 to 6 ft bgs in this area of the site. It is concluded that relatively low concentrations of TCE in soil at this location and depth (within the zone of the water table fluctuation) is related to groundwater contamination and does not represent a significant soil contamination source area.

4.6.2 Groundwater Contamination

Chemicals in groundwater that exceed the residential tap water and/or VI SLs, as shown in Tables 3-10 through 3-14 and 4-3, and plotted on Figure 4-3, define the locations and chemicals at SS-39 that represent contaminated groundwater. Contaminated groundwater lies hydraulically downslope from the suspected point source release areas (sumps and pipe outfalls) and the impacts to groundwater extends beyond the SS-39 site boundary southward into the Lost River Basin. The current location of groundwater that exceeds the tap water and/or the VI SLs suggests that contaminants have moved slowly downgradient from the source areas in response to advective groundwater flow. The location of the highest chemical concentrations near wells MW39-6/6D and lower concentrations at well MW39-02 near the southwestern sump suggests that chemical releases and leaching from soil source material near the sumps have subsided over time, resulting in a nearly detached, downgradient plume. As shown on Figure 4-6, the total area of the plume that exceeds VI risk SLs and that represents the pathway of concern for groundwater at SS-39 is approximately 10 acres. This groundwater is shallow and generally lies between 2 to 5 ft bgs (Tetra Tech, 2011).

4.7 RECOMMENDED REMEDIAL ACTION

Both soil and groundwater at SS-39 have been impacted and represent unacceptable risk for unrestricted future land use (i.e., residential). The areas of contaminated soil have been shown to be localized and associated with historical point release locations (sediment accumulation in troughs, basins, sumps, and soil adjacent to these features). As indicated on Figures 4-4 and 4-5 and described in Table 4-4, the

anticipated areas and volume of soil and sediment that must be remediated to mitigate future residential risk from soil and sediment contamination represents approximately 660 ft^2 of area, lies at a relatively shallow depth (maximum of about 14 ft bgs), and totals approximately 274 yd^3 from 6 locations. Furthermore, soil excavation and replacement with clean backfill is a proven and cost effective technology that is currently being utilized at HAFB for similar sites. Excavation and permitted disposal is the recommended remedy for contaminated soil at SS-39. At the completion of this action, all areas currently containing soil contamination exceeding criteria for unrestricted future site use would be remediated. Furthermore, soil contaminant mass that may be contributing to ongoing leaching of contaminants to groundwater would be mitigated, thus preventing future degradation of groundwater quality from soil source areas.

Groundwater at SS-39 (and HAFB) is not potable due to elevated concentrations of TDS (greater than 10,000 mg/L). While groundwater has been impacted by chemicals that exceed tap water SLs, remedial action to restore groundwater for tap water use is impractical and remedial action to meet the tap water cleanup levels is not recommended (i.e, the pathway is not and will not be complete). However, VOCs detected in groundwater represent current and future risk to human health via VI if buildings are occupied near the groundwater plume. The area of groundwater that represents current and future VI risk, as shown in Figure 4-5, is approximately 10 acres in size.

The data indicate that the plume is slowly migrating toward, and that a portion of the plume currently lies within, the Lost River Basin. Based on the site history, it is likely that contaminant releases and impacts to groundwater began up to 60 years ago. The southern extension of the plume currently lies approximately 500 ft downgradient from the Building 1176 sumps, suggesting an average plume velocity of 8 ft/year that is consistent with the site groundwater velocity. There are several technologies that could be evaluated to remediate groundwater that would mitigate or eliminate risk via the vapor intrusion pathway, as follows:

- Contaminant removal via groundwater extraction
  - Extraction from wells
  - Extraction from interceptor trenches
- In situ chemical oxidation
  - Multiple injection points
  - Groundwater recirculation

- In situ enhanced or augmented biological degradation
  - Multiple injection points
  - Groundwater recirculation

Within the basin, most of the above actions that might be implemented during remediation (e.g., construction of permanent injection or recovery wells, large scale trenching) are prohibited due to ecological concerns (Livingston, 2006). Furthermore, due to the relatively poor permeability of the aquifer, extraction or in situ technologies aimed at chemical or biological destruction of contaminants would require large numbers of wells or injection points to address the entire plume area. Because of these site conditions, remediation of the groundwater plume is technically challenging and likely to be cost prohibitive, and is not recommended. It is recommended that LUCs be placed on the property that encompasses the portion of the current plume that lies outside of the Lost River Basin (approximately 7 acres). Because building construction is already prohibited in the basin, additional controls on the portion of the plume currently in the basin is not required to prevent VI risk. Based on the current location of the plume (see Figure 4-5) and the slow plume velocity, the plume is unlikely to move beyond the Lost River Basin (or leave HAFB property) or impact another potable groundwater source in the future. Because the plume velocity is low and a large groundwater LTM data set exists for SS-39, future groundwater LTM sampling is recommended to confirm plume stability. Details for future LTM sampling and site closure are provided in Section 6.

5.0 CORRECTIVE MEASURES WORK PLAN

This section presents a detailed plan to remove contaminated soil at SS-39. Based on the results of soil sampling activities conducted as part of the initial ACM implementation and identification of contaminated soil that exceeds cleanup levels, discussed in Section 4.0, the volume and location of soil to be excavated has been determined. Field activities to be completed during this project include:

- Pre-mobilization planning;
- Mobilization;
- Site preparation;
- Excavation;
- Transport and disposal of contaminated soil;
- Post-excavation sampling;
- Decontamination;
- Backfilling and site restoration; and
- Demobilization.

5.1 PRE-MOBILIZATION PLANNING

Before site mobilization, it will be necessary to complete several pre-mobilization/planning activities. These activities include, but are not limited to:

- The provision of borrow/clean soil will need to be verified from the HAFB soil borrow area to ensure that soil for backfilling will be available. If the clean soil is not available from the borrow area within the base, other borrow areas outside the Base will be located to backfill the excavation.
- After the approval of this Work Plan Addendum by HAFB and AFCEE, a site reconnaissance/survey will be conducted to verify and survey the limits of excavation and finalize the implementation schedule.
- A pre-construction meeting will be scheduled and conducted, and HAFB/AFCEE/NMED will be notified of the intent to begin work.

5.1.1 Permits and Requirements

This section details the permits and requirements necessary to conduct ACM at SS-39.

5.1.1.1 HAFB Regulations

The work will be performed on a secure Air Force installation and the contractor personnel must become familiar with and comply with HAFB regulations. All required badges, passes, and vehicle permits will be acquired with proper authority and prior to commencing work at SS-39 (e.g., access pass, camera pass, etc.).

5.1.1.2 Site Access

SS-39, as shown on Figure 1-2, is located in the west-central portion of HAFB. Northeast of SS-39 is a Test Track where rocket sled tests are conducted at various times. Although SS-39 is not a restricted area, coordination with Test Track personnel will be required to ensure that access onto SS-39 will not be restricted during the proposed work schedule.

5.1.1.3 Utility Clearances and Dig Permits

Excavation activities at HAFB will be required to comply with HAFB SOP-3 (Appendix E) on utility clearance and dig permits within the specified timeframe prior to commencing the work. If a utility line is located at SS-39 during the corrective measures implementation, work will cease and the appropriate authority will be contacted for inspection and line determination.

5.1.2 Site Reconnaissance

Prior to excavation activities, SS-39 will be visually inspected to mark the extent of the excavation.

5.2 MOBILIZATION

The following sections presents the mobilization of personnel and equipment required for execution of the ACM at SS-39.

5.2.1 Personnel

Personnel required for the execution of the ACM at SS-39 include, but are not limited to the following:

- Project Manager;
- Project Engineer;
- Site Safety & Health Officer (SSHO);
- Field Operations Supervisor (FOS);
- Equipment Operators;

- Laborers; and
- Environmental Technicians.

The above personnel will be responsible for the following activities:

- Field oversight/planning;
- Safety compliance;
- Maintenance and operation of equipment;
- Transportation activities;
- Sampling and recording data; and
- Other activities necessary to establish operational support.

When feasible, personnel may have multiple responsibilities.

5.2.2 Equipment

Equipment required for the execution of the ACM at SS-39 include, but is not limited to the following:

- Clearance machine (front loader, mini excavator, etc.);
- Track excavator(s);
- Track/wheel loader;
- Disposal vehicle(s) (e.g., dump trucks);
- Water apparatus (sprayer, water truck, etc.);
- PID;
- Decontamination equipment;
- Sampling equipment;
- Dewatering Pumps and Piping; and
- Water Storage Tanks.

5.3 SITE PREPARATION

The following section describes the preparatory site work to be performed prior to the implementation of the ACM at SS-39. Site preparation activities include clearing vegetation, removing fencing to gain access to the discharge box, and the construction of a decontamination pad. The general site layout is presented in Figure 1-3.

5.3.1 Site Layout, Spill Containment, and Equipment Lay Down Areas

The following sections describe the site layout, spill containment, and equipment lay down areas.

5.3.1.1 Site Layout

Prior to intrusive activities, the work zones (exclusion zone, contamination reduction zone, and support zone) will be demarcated by interim barriers to ensure the appropriate hazard communication during excavation and sampling. The exclusion zone will consist of the area to be excavated plus a small area adjacent to the excavation. The general site layout depicting the excavation work zones is presented in Figure 4-5.

5.3.1.2 Spill Containment

Spill kits will be readily available to address incidental releases of fuel or oil during fueling and maintenance operations. The spill kits will consist of the following items:

- Absorbent material (Oilophylic pads, rags, broom, etc.);
- Storage/disposal containers (55 gal. drums or equivalent); and
- Spill/migration controls (poly sheeting, berms, etc.).

Soils contaminated as a result of spills from heavy equipment will be excavated and segregated for waste characterization and disposal. Contaminated soils resulting from small spills may be containerized in drums or roll-off boxes. Waste disposal characterization will be performed to include the applicable list of contaminants associated with SS-39. Alternatively, contaminated soils may be added to soil waste piles from SS-39 excavation activities; however, in such instances, the waste profile analysis will be expanded to include analyses consistent with the spilled material. Contaminated soils resulting from a spill from heavy equipment or machinery will be disposed at an appropriate disposal facility.

Because the disturbed areas are expected to be less than 1 acre, a Surface Water Pollution Prevention Plan (SWPPP) is not required for the ACM at SS-39.

5.3.1.3 Equipment Lay Down Area

A clean equipment lay down area will be identified as part of the mobilization activities for this project. The equipment staging areas will be used to stage equipment for pre-work and post-decontamination inspections.

5.3.1.4 Soil Erosion and Sediment Controls

Because the disturbed areas are expected to be less than 1 acre, a SWPPP is not required for the ACM at SS-39. However, climate conditions may dictate certain control measures to mitigate potential erosion and wind transport of soil. Control measures that may be utilized include berms to protect soil stockpiles, silt fence or hay bales, and poly sheeting to cover soil stockpiles.

5.4 EXCAVATION OF CONTAMINATED SOIL

Soils that are identified to contain contaminants at concentrations exceeding the cleanup levels (see Section 4.3), which are based on NMED Residential SSLs and/or vapor intrusion SSLs, will be excavated; temporarily stockpiled, if dewatering is necessary; and transported off-site to a permitted disposal facility to accept special waste. The following sections describe the methodologies and procedures planned to remediate contaminated soil associated with SS-39.

5.4.1 Excavation Area

The perimeter of each excavation area within SS-39 is shown on Figure 4-4. There are a total of six separate locations where soil and/or sediment will be removed. A description of each location and the approximate dimensions, depths and volumes of soil/sediment to be excavated at SS-39 are presented in Table 4-4. The excavation limits shown on Figure 4-4 encompass the SSL exceedances at SS-39, which were determined through the evaluation of all analytical data collected at SS-39, as discussed in Sections 4.4 through 4.6. The final volume of soil to be removed is subject to change based upon actual field observations, field measurements, or any additional laboratory analytical results that may be obtained during excavation activities.

5.4.2 Excavation Equipment

Excavation equipment and tools will be required to remove soil and sediment, to dig out and remove up to 8-ft diameter concrete sumps, and to clean out drainage troughs and sediment trap boxes. The maximum depth of excavation is expected to be approximately 14 ft bgs and the largest lateral dimension of the excavations is expected to be approximately 12 ft. If possible, soil will be loaded directly into dump trucks for transport to the off-site disposal facility, unless groundwater or saturated soil is encountered (see below). The specific equipment will be selected based upon the operational logistics, weather, and site conditions in force at the time of ACM implementation.

5.4.3 Excavation Methodology

The methods of excavation will provide the maximum protection to site workers while enabling the team to optimize operational effectiveness and efficiency. Equipment operators will maintain a clear line of sight with the excavation location. When the operator does not have a clear line of sight, a spotter will be used, as necessary, to visually inspect the excavation areas as frequently as needed to identify potential hazards. Spotters will inspect the content and consistency of the soil removed to verify the nature and extent of impacted soil. During these inspections, the operator will throttle down the equipment and remove his hands from the controls in order to protect ground personnel while they inspect the excavation area.

If a utility line is located at SS-39 during the corrective measures implementation, work will cease and the appropriate authority will be contacted for inspection and line determination.

5.4.4 Determination of Complete Excavation Areas

The determination of whether the excavation is complete will be dictated by visual observation, field screening of excavated soil (e.g. PID), and knowledge of the analytical results from the pre-excavation sample locations (i.e., all existing sample results). If discolored soil is visually observed or excavated soil contains elevated PID readings, the excavation will be expanded to include this material. Once the limits of excavation samples have been determined using the aforementioned procedures, confirmation sampling will be conducted; however, based on existing soil data, backfilling of the excavation will not be dependent of receipt of the confirmation sample results from the laboratory. If site or soil conditions are observed or believed to be distinctly different than those expected based on the pre-excavation sample data, then excavations may be held open until receipt of the confirmation sample laboratory results.

Post-excavation confirmation samples will be collected from the side walls and the bottom of the excavation. The samples from the side walls will be collected at approximately one sample every 50 linear ft (LF) of excavation at the depth where the contamination is expected to be the highest. Samples will be collected from the bottom of the excavation at a minimum of one every 2,500 ft^2. For small excavations, less than 50 LF per side, a maximum of 2 side walls samples and 1 bottom sample will be collected. The samples at SS-39 will be selectively analyzed for VOCs, TPH, and metals (arsenic, chromium, and lead only) depending on the excavation-specific remediation rationale (i.e., based on contaminants that have been shown to exceed criteria at each excavation location).

5.4.5 On-Site Soil Management

During excavation activities at SS-39, soils excavated from designated areas will be direct-loaded into dump trucks and transported to an off-site disposal facility, unless saturated soil or groundwater is encountered. If excavated soil is too wet for immediate transport, then contaminated soil will be stockpiled on plastic sheeting, and bermed if necessary to prevent runoff, adjacent to the excavation and allowed to dewater. Fluids draining from the contaminated soil must be captured, containerized, and tested prior to proper disposal (if fluids are returned to the excavation, they must be immediately pumped out). Once all free water has drained from the contaminated soil stockpile, soil will be loaded into dump trucks for disposal. Soil/sediments within the drainage troughs, in the discharge box, and in the concrete basin will be removed using shovels, vacuum equipment, or a small excavator.

Best management practices and engineering controls will be utilized to mitigate the potential for migration of soil or groundwater contamination while excavation activities are performed at SS-39. Engineering controls including berms, silt fence and/or straw or hay bales, and plastic covers will be used around soil stockpiles to prevent the uncontrolled migration of sediment during precipitation events. When feasible, equipment will be positioned outside areas of potential contamination and will not traverse contaminated areas.

Water may be applied for dust suppression, as needed, for the clean overburden soil stockpile. If necessary, tarps will be used to protect stockpiled soil from wind and rain.

5.5 RECORD KEEPING

The FOS will be responsible for maintaining records for all wastes shipped from SS-39. Waste disposal tracking documents and tables describing the respective wastes, volume of waste, transporter, disposal facility, and the date it is shipped from the site will be prepared. These tracking documents will assist in the preparation of the manifests/bills of lading. These records will be retained in accordance with 40 Code of Federal Regulations (CFR) 262. Copies of any required approvals, permits, and insurance certificates will be obtained from the approved facility and transporters, as required.

5.6 POST-EXCAVATION INSPECTION

As each proposed excavation shown on Figure 4-4 is completed, the bottom and sidewalls of each excavation will be inspected for evidence of contamination. If evidence of contamination is noted

(e.g., staining, odor, field meter readings, etc.), additional material will be removed from the area of the evident contamination. This process will continue until evidence of contamination is no longer observed and the confirmation samples, discussed in Section 5.2, can be collected.

A combination of field observation, field meter testing, and knowledge of the data from the pre-excavation samples will dictate when excavation is complete.

Section 5.0 of this ACM Work Plan Addendum presents the specific sampling and analysis parameters proposed for confirmation sampling for this project. Specific sampling and QC parameters for those methods are described in detail in the AFCEE QAPP (AFCEE, 2006).

5.7 DECONTAMINATION

Decontamination of heavy equipment, sampling tools, and personnel will be performed to avoid cross-contamination, health and safety precautions, and to limit the migration of contaminants off-site.

All heavy equipment will be decontaminated in accordance with the HAFB SOP-2H (Appendix E). Generally, heavy equipment will be decontaminated by initially removing gross soil accumulation using a scraper, brush, or other device, then further decontamination using a high-pressure spray wash at a constructed decontamination pad designed to contain wash water fluids and sediment. Each piece of heavy equipment will be decontaminated and visually inspected prior to leaving SS-39.

Decontamination of reusable sampling equipment and tools is required and will be conducted in accordance with HAFB SOP-2 (Appendix E). Equipment and/or clothing that cannot be reused will be collected in plastic trash bags and disposed of as solid waste.

Trucks transporting wastes off-site will be cleaned at the point of loading before leaving the site. All loose or bulk soil will be removed from the truck body, tires, chassis, axles, and other external portions of the truck bed and dump gate. During loading, extraneous soil can accumulate on the truck side rails, tailgates, and bumpers. This soil will be brushed off the truck before the truck leaves SS-39. On-site trucks and construction equipment will generally remain within the exclusion zone rather than be decontaminated. On-site trucks and equipment will be decontaminated once excavation activities are completed and prior to leaving SS-39.

5.8 BACKFILLING AND SITE RESTORATION

Once the post-excavation has determined that contaminated soils have been successfully removed, the excavation will be backfilled and re-graded to establish continuity with the natural slope of the surrounding area. The remediation of SS-39 will require the removal and off-site disposal of approximately 274 yd^3 of soil. It is anticipated that the HAFB borrow area will provide all of the backfill material that will be needed to backfill the excavations at SS-39.

Once contaminated soil has been removed, the clean fill will be transported from the on-base borrow area and will used to backfill the excavation. In the event that groundwater is encountered at SS-39 and groundwater seepage cannot be reasonably controlled during backfilling (e.g., by pumping from the excavation), then gravel backfill may be used in the lower portions of the excavation to provide a base for the soil backfill. The backfilled area will be compacted and crowned to prevent excessive settlement. The site will be restored to its approximate topographical conditions.

5.9 DEMOBILIZATION

After completion of all activities described in this ACM Work Plan, all heavy equipment, machinery, and tools used to perform the work will be inspected and decontaminated to remove any potentially contaminated soil. Each item will be thoroughly inspected to ensure that all potential contamination is power washed or wiped from all site equipment. Demobilization will be considered complete after all heavy equipment, machinery, and tools have been decontaminated and all temporary facilities (e.g., decontamination pad) have been decommissioned.

5.10 FIELD SAMPLING AND ANALYSIS

This section presents the field sampling activities planned for SS-39. The general site layout of SS-39 is shown on Figure 1-3 and the areas proposed for excavation are shown on Figure 4-4. These protocols and procedures provide guidelines as to how each activity should be performed. HAFB SOPs pertinent to the sampling activities are included in Appendix E.

For all samples collected during the execution of this scope of work, a sample collection log will be completed for documentation purposes. A daily field log will be completed at the end of each day to document daily site activities. On days when samples are collected, a copy of the completed chain of custody record will accompany all field paperwork to the project office.

5.10.1 Data Quality Objectives

The Data Quality Objectives (DQOs) govern the rationale and methods selected to collect samples and methods of laboratory analysis:

DQO 1 – Implement a soil sampling program to confirm that chemicals exceeding cleanup levels have been removed at the proposed excavation areas.

DQO 2 – Execute a sampling program to verify planned disposal methods for soil comply with all requirements for disposal at the off-site disposal facility.

DQO 3 – Implement a post-excavation inspection program to verify all visible contamination (e.g., staining, odor, etc.), and all soils with elevated PID readings have been removed from the excavation area. The results of the post excavation inspections will be documented in the field activity log and confirmed with photographs.

DQO 4 – Present a defensible data summary report to verify that the ACM for SS-39 has been implemented, and the remedy is complete, effective, and protective to support regulatory closure of the site.

5.11 POST-EXCAVATION CONFIRMATORY SAMPLING

In order to meet the remediation objectives for SD-39, contaminated soils that exceed the residential cleanup levels will be excavated. During the excavation activity, the field team will conduct visual observations for signs of contaminated soil (e.g., staining), will use field meters or testing kits (e.g., PID) to determine presence of organic chemicals, and will review the excavation limits with respect to the pre-excavation sample locations to determine that the excavation has met the remedial objective.

Following field efforts to determine that contaminated soil has been removed, confirmation samples will be collected from the side walls and the bottom of the excavation prior to backfilling to provide laboratory confirmation data that remaining soils do not exceed cleanup levels. The samples from the side walls will be collected at approximately 1 sample every 50 LF of excavation at the depth where the contamination is expected to be the highest. The samples will be collected from the bottom of the excavation at a minimum of 1 sample every 2,500 ft^2 (e.g., one sample for every 50 X 50 ft grid area). For small excavations, less than 50 LF per side, a maximum of 2 side walls samples and 1 bottom sample will be collected. Samples will be collected using a stainless steel trowel or spoon that has been

decontaminated prior to each use. The sample will be homogenized in a decontaminated stainless steel bowl (excluding VOC samples) and selectively analyzed for VOCs, TPH, and metals (arsenic, chromium, and lead only).

QC sampling will be performed at a frequency of 1 QC sample per 10 discrete soil samples and 1 matrix spike/matrix spike duplicate (MS/MSD) per 20 discrete soil samples

Due to safety concerns, soil samples from excavations greater than 4 ft will be collected directly from the bucket of the excavator or backhoe. In such instances, the sampling technician will direct the equipment operator where to collect the soil sample and observe the sample collection to verify the soil in the bucket is representative of the location and depth of soil to be characterized.

5.12 SAMPLE PREPARATION AND DOCUMENTATION

The procedures for sample preparation and documentation are detailed in HAFB SOP-1 (Appendix E). All samples will be prepared, documented, handled, and shipped in accordance with this SOP.

5.13 DECONTAMINATION

Decontamination of non-disposable equipment and personnel will be performed for health and safety precautions, to avoid cross-contamination, and to limit the migration of contaminants off-site. Because of the planned use of disposable sample collection equipment where possible, it is anticipated that the level of decontamination required for sampling equipment will be minimal. HAFB SOP-2 (Appendix E) presents the detailed procedures for decontamination of sampling equipment.

5.14 REPORTING OF DATA

The results of the activities conducted as part of the ACM Work Plan and this Addendum, including sampling results, boring and well logs, field activity log, sample collection logs, and photographs will be presented in an ACM Completion Report.

5.15 WASTE MANAGEMENT AND DISPOSAL

The objective of this chapter is to outline the procedures to classify, characterize, handle, and manage the off-site disposal of wastes, while conducting work practices to minimize the volume of wastes generated at SS-39. The procedures will be in compliance with all Federal, State, and local regulations, including but not limited to those listed below.

Federal

- U.S. Department of Transportation 49 CFR 171-177, Hazardous Materials Transportation Regulations
- 29 CFR 1910, Occupational Safety and Health Administration and 29 CFR 1926, Occupational Safety and Health Administration Construction Standard
- 40 CFR 260, Hazardous Waste Management System: General
- 40 CFR 261, Identification and Listing of Hazardous Waste
- 40 CFR 262, Standards Applicable to Generators of Hazardous Waste
- 40 CFR 263 Regulation for Hazardous Waste Transporters
- 49 CFR 100-177, Hazardous Material Transportation Act

5.16 WASTE DISPOSAL PROFILE ANALYSIS AND FACILITY SELECTION

Waste characterization soil samples were collected at SS-39 during the initial ACM implementation and excavated soils meet the RCRA requirements for classification as a nonhazardous special waste. These sample results are provided in Appendix F. A special waste disposal authorization request will be filed with the State of New Mexico and provided to the landfill to acquire special waste authorization for the disposal of excavated soils. If determined necessary, soil sample test results will be submitted with the special waste disposal request verifying the waste is not hazardous.

5.17 OFF-SITE TRANSPORTATION AND DISPOSAL

All excavated soils will be transported directly to an approved off-site disposal facility. A local transportation contractor, licensed in New Mexico to haul the generated waste, will be subcontracted to provide transport to the disposal facility. Drivers will be required to sign into the site (Visitors Log) and provide all applicable permits, certifications, and licenses for each vehicle upon entry to the site.

Trucks transporting wastes off-site will be cleaned at the point of loading before leaving the site. All loose or bulk soil will be removed from the truck body, tires, chassis, axles, and other external portions of the truck bed and dump gate. Any remaining soil will be washed from the truck after the load is covered and before the truck leaves the loading area.

Trucks transporting wastes off-site will be completely and tightly covered with a tarp to prevent wastes from falling or blowing out of the truck bed. The tarp will be solid and free of holes, rips, tears, or other openings. All edges of tarps will be tightly secured to the sides of the truck beds. Dump gates will be tightly closed and free of cracks, gaps or other openings. Any soil remaining in the truck bed must be removed prior to leaving the disposal area and decontaminated before being discharged from waste transport service at HAFB.

5.18 RECORD KEEPING

The FOS will be responsible for maintaining records for all wastes shipped from the site. Waste disposal tracking documents and tables describing the respective wastes, container contents, its respective identification number, size, condition, transporter, disposal facility, and the date it is shipped from the site will be prepared. These tracking documents will assist in the preparation of the manifests/bills of lading. These records will be retained in accordance with 40 CFR. Copies of any required approvals, permits, and insurance certificates will be obtained from the approved off-site disposal facility and transporters as required.

After wastes have been unloaded at the approved landfill facility, the transporter will receive a load ticket. The load ticket will correspond to the respective special waste manifest and bill of lading. The ticket will be retained as the record of disposal in accordance with 40 CFR.

5.19 FIELD HEALTH AND SAFETY

The health and safety procedures followed during the execution of this plan are outlined in the Tetra Tech Health and Safety Plan (HASP) (Tetra Tech, 2010). The Tetra Tech SSHO will provide oversight and direction for the activities within the scope of this work plan addendum. An Activity Hazard Analysis for the planned work at SS-39 is provided in Appendix G.

5.20 MEDICAL SERVICES CLINIC INFORMATION

The Medical Services clinic near HAFB is:

White Sands Family Practice & Immediate Care
2010 Pecan Drive
Alamogordo, New Mexico 88310

Route to the White Sands Family Practice & Immediate Care Center from HAFB is as follows:

- Take US-70 E (turn left) from HAFB commercial vehicle gate for approximately 9.1 miles;
- Turn right onto Indian Wells Road for 1.0 miles;
- Turn right onto Pecan Drive for 125 ft; and
- Arrive at 2010 Pecan Drive.

The distance to the medical facility from HAFB is approximately 10.1 miles and is anticipated to take approximately 30 minutes.

5.21 MEDICAL SERVICES CLINIC INFORMATION

An emergency situation is defined as a sudden, generally unexpected occurrence demanding immediate action. Emergencies at HAFB include accidents, injuries requiring medical care, fires, explosions, and significant releases of hazardous substances to the environment, and extreme weather events, such as tornadoes.

In the event that an emergency situation arises, the appropriate immediate response must be taken by the first person to recognize the situation. The field crew shall immediately notify the site management of the incident, and the appropriate emergency service organization shall be contacted. A list of emergency contacts is provided in Table 2-1 of the Tetra Tech HASP (Tetra Tech, 2010). A copy of the emergency telephone numbers and directions to the nearest selected urgent care facility can be found in the Emergency Action Plan binder, which will be on-site at all times. Emergency Medical Services (EMS) shall transport seriously injured personnel to the hospital. The Project Manager shall be notified of any job-related accident, injury, or illness.

In the case of injury or illness, a trained person will render the proper emergency first aid care. First aid equipment and emergency eyewash shall be available at SD-27. Personnel will be notified as to the locations of first aid equipment during the initial safety briefing session.

If the injury or illness is from exposure to a hazardous substance, rapid identification of that substance should be attempted. This information shall be provided to the medical personnel. Material Safety Data Sheets (MSDSs) are provided for operational chemicals. The MSDS details first aid procedures to follow in the event an exposure occurs.

Unless the emergency event is extreme and obvious, the decision to cease all field activities and evacuate the site will be made by the FOS and SSHO. Field personnel will report to the Project Office to sign-out, if possible.

5.22 PERSONAL PROTECTIVE EQUIPMENT

When engineering and administrative controls are not feasible or adequate to protect personnel from the hazards associated with project activities, personal protective equipment (PPE) use will be required. Refer to the Tetra Tech HASP for the specific PPE requirements.

5.22.1 Level D Protection

A minimum of Level D protection will be required for all site work. This level of protection will include use of:

- Hard-toed work boots [American National Standards Institute (ANSI) Z41-1991 approved];
- Nitrile gloves (inner);
- Work gloves (based on specific task and weather conditions may require multiple layers);
- Sleeved shirts;
- Long pants;
- Hard hat (comply with ANSI Z89.1-1986, minimum Class C as required);
- Hearing protection (provide attenuation below effective hearing levels, as required);
- ANSI 87.1 approved safety glasses (with side shields); and
- Additional appropriate dress as required by weather conditions.

5.23 EXCAVATION SAFETY REQUIREMENTS

Any excavation 4 ft or deeper, into which persons will enter and perform work, shall be shored, sloped, or otherwise made safe for entry. Excavations less than 4 ft in depth in which a competent person, as defined in 29 CFR 1926 Subpart P, examines and determines there to be no potential for cave-in, do not require protective systems. Certain excavations and trenches are considered confined spaces that require a confined space entry permit; however, management of the excavations at SS-39 are not expected to require any such permit.

Daily inspections of the excavation shall be made by a competent person as defined in 29 CFR 1926 Subpart P. All excavated materials shall be placed at least 2 ft from the edge of the excavation. The FOS and the SSHO shall evaluate the exposure of the excavation to employees, vehicles, and equipment. This evaluation shall be used in determining the class of perimeter protection.

All project personnel shall participate in the site-specific training session and be instructed in the following requirements:

- Operations shall be suspended, ignition sources eliminated, and the area shall be ventilated if the concentration of flammable/combustible vapors reach or exceed 10 percent of the lower explosive limit. A combustible gas indicator will be used to make this determination.
- Employees shall not work in excavations in which there is accumulated water, or in excavations in which water is accumulating, unless adequate precautions have been taken to protect employees against the hazards posed by water accumulation. If water is controlled or prevented from accumulating by the use of water removal equipment, the process shall be monitored by a competent person to ensure proper operation.
- Excavations greater than 4 ft in depth that require personnel to enter shall have sufficient means of entry and egress (e.g., stairs, ladders, and ramps). Means of entry/egress shall not require personnel to travel laterally more than 25 ft.

6.0 SITE CLOSURE

Site closure for SS-39 is based on a remedial strategy to achieve the following objectives:

- Cleanup of soil to meet residential SSLs; and
- Prevent risk via exposure to groundwater.

The objectives for site closure will be achieved by implementing the remedial actions described below.

6.1 SOIL CLEANUP

The areas of contaminated soil that exceed the cleanup levels to achieve residential land use have been identified. Excavation and reclamation of these areas with clean backfill will result in no future site restrictions based on soil contamination. In the event that excavation confirmation soil samples show exceedance of the cleanup criteria, then additional remedial measures may be required to fulfill this objective (e.g., additional excavation and confirmation sampling).

6.2 PREVENT EXPOSURE TO GROUNDWATER

The groundwater plume includes contamination that exceeds cleanup levels for tap water use and for vapor intrusion from groundwater to indoor air. Currently, there is no groundwater use at SS-39. Because groundwater is classified as non-potable due to a high TDS content, there is no reasonable expectation of current or future potential for use of groundwater as tap water. Therefore, the direct contact pathway for groundwater is incomplete (for current and future land use). However, the widespread presence of TCE (a volatile organic chemical) in the plume indicates that unacceptable risk would occur if a building is constructed and occupied near the TCE plume area.

Groundwater LTM has been conducted since 1995 at SS-39 and chemical concentration trends for the past 5 years indicate a relatively stable TCE plume as shown by concentration verse time plots provided in Appendix H. In addition, it is likely that releases of TCE to the environment were active during the years (as early as the 1950's) when rocket motor maintenance activities were conducted at Building 1176 and discharges to and from the sumps occurred. As discussed in Section 4.3, the current plume configuration suggests that releases of TCE to the plume from the sumps (i.e., point sources) have subsided and the plume has migrated downgradient and away from the source area toward the Lost River Basin. The absence of TCE daughter products (e.g., dichlorethene, vinyl chloride, and ethane) in the downgradient portion of the

plume strongly suggests that reductive dechlorination, a significant biological mechanism of intrinsic TCE remediation at many sites, is not occurring at SS-39. Therefore, the conceptual model of the current groundwater contamination is represented by a long lived, slow moving, plume that currently exists in relative equilibrium with the local hydrogeology. Because of the non-potable groundwater classification, the inferred stability of the plume, and the prohibition of any development activities in the Lost River Basin, the following is recommended to prevent groundwater exposure:

- Plume area within the Lost River Basin (approximately 3 acres) – NFA.
- Plume area upslope of the Lost River Basin (approximately 7 acres) – Implement LUCs to prevent use of groundwater and to prevent building construction near the plume unless VI prevention measures are approved and implemented.
- Implement groundwater LTM to demonstrate that the plume is stable and/or shrinking.

The LUCs may be removed if future groundwater sampling demonstrates that the plume has naturally attenuated and meets the vapor intrusion cleanup levels.

6.3 PERFORMANCE MONITORING

Performance monitoring for soil cleanup will be based on documentation that the areas identified for excavation have been remediated with respect to pre-excavation soil sample locations, excavation field observations and completion records, waste manifests, and the confirmation samples that are collected from the excavations prior to backfilling.

Performance monitoring for groundwater will consist of LTM monitoring of the TCE plume to demonstrate that the plume is stable and/or shrinking. Currently there are 17 groundwater sample locations associated with SS-39 consisting of 12 permanent wells and 5 temporary well locations in the Lost River Basin. Sixteen of the 17 locations are scheduled for semiannual sampling under the current LTM program (Tetra Tech, 2011). Upgradient well MW39-01 has been historically free of contamination and it has not been sampled; well MW39-04 has historically been free of contamination but has been frequently dry; and well MW39-03 has historically detected TCE at concentrations below the current SL, and has more recently contained a root mat that has prevented sampling. To ensure that the southern limits of the TCE plume is monitored, additional temporary wells will be required in the Lost River Basin south of existing well MW39-08 and -11. Based on these site conditions, the following LTM sampling locations are recommended:

- Continue groundwater sampling at the current LTM sample locations with the exception of wells MW39-01, -03, and -04, for a total of 14 locations.
- Plume investigation should be conducted to identify two new temporary well locations (i.e. directly south of locations MW39-08 and -11) for future LTM sampling in the Lost River Basin. It is recommended that these sample points be located as far north as possible such that the current southern limit of the plume is identified. For the first LTM sample event, groundwater sampling using temporary bore holes may be required at several locations in order to identify the southern plume limits. For subsequent LTM events, it is assumed that two select locations can be used to meet the monitoring objectives of monitoring the southern plume perimeter.
- Because new contributions to the plume have ceased and contaminated soil is recommended to be removed, and because the groundwater velocity is low (10 ft/year or less) and recent chemical concentration trends appear to be stable (Appendix H), it is reasonable to conclude that the plume is relatively stable. On this basis, annual LTM sampling is recommended to identify trends in the groundwater plume. Once monitoring locations for the southern limit of the plume have been more accurately identified, five years of LTM monitoring is recommended to demonstrate that the plume is stable and/or shrinking.
- The chemicals and pathways of concern for groundwater at SS-39 are VOCs that represent potential VI risk from groundwater to indoor air. LTM groundwater samples are recommended for analyses of VOCs and water quality parameters (pH, temperature, specific conductivity, TDS, oxidation-reduction potential).

Based on the recommendation for annual LTM sampling, LTM reports will likewise be submitted annually. Optimization of the well locations to be sampled may be proposed for consideration based on the accumulated sampling results.

6.4 REQUEST FOR NO FURTHER ACITON

Implementation of the remedial strategy (see section 6.1) will be documented in an ACM Implementation Report that will describe the soil excavation, backfilling, disposal, and confirmation sampling activities. In addition, LTM reports will continue to be submitted to HAB and NMED that will provide the analytical data to assess when the remedial objective of demonstrating a stable or shrinking plume have been obtained. Once these goals have been met, a request for NFA status based on NFA Criterion 5 is recommended for SS-39:

The SWMU/AOC has been characterized or remediated in accordance with current applicable start or federal regulations, and the available data indicate that contaminants pose an acceptable level of risk under current and projected future land use.

The NFA request will include documentation that a LUC to prevent construction of buildings near the TCE plume area, unless an approved method of vapor intrusion prevention is included in the building design, has also been implemented.

The NFA request will be accompanied by a formal request to NMED for a Class 3 Permit Modification to transfer SS-39 from permit Appendix 4.A Table A (SWMUs/AOCs Requiring Corrective Action) to Appendix 4.A Table B (SWMUs/AOCs Not Requiring Corrective Action).

7.0 REFERENCES

Bhate (Bhate Environmental) 2003. Basewide Quality Assurance Project Plan, Holloman Air Force Base, Alamogordo, New Mexico. November.

HGL (HydroGeoLogic, Inc.) 2005. Draft Supplemental RCRA Facility Investigation Work Plan, Holloman Air Force Base, Alamogordo, New Mexico. July.

HydroGeoLogic, Inc. (HGL), 2006a. Response to Notice of Deficiency, Supplemental RFI Work Plan, SWMUs 101, 104, 105, 108, 109, 113B, 115, 116, 165, 177, 179, and 181, July 2005, Holloman Air Force Base, Alamogordo, New Mexico. March.

HGL., 2006b. Personal communication between NMED personnel and Mr. Ken Cottrell during a February 12, 2006 site visit of DP-30/SD-33 and SS-39.

HGL., 2006c. Telephone communication between Mr. David Strasser of NMED and Mr. Ken Cottrell of HGL in December 2006 regarding the need for further UDMH and aniline groundwater analyses at SS-39. December.

HGL, 2007. Supplemental RCRA Facility Investigation, DP-30/SD-33 (SWMU 113), SS-39 (SWMUS 165, 177, 179, AND 181), and SD-27 (SWMU 141), Holloman Air Force Base Alamogordo, New Mexico

HGL, 2008. Email communication between Mr. David Strasser of NMED and Mr. Ken Cottrell of HGL in July 2008 regarding the need for further UDMH and aniline groundwater analyses at SS-39. July.

Livingston, K., 2006. Personal communication between Mr. Kelly Livingston, Holloman AFB CES Environmental Department and Mr. Brett Brodersen and Miss. Sarah Gillette of HGL, Inc. regarding installation of monitoring wells within the Lost River drainage basin. May.

New Mexico Administrative Code (NMAC) 20.6.20.3103. Standards for Ground Water of 10,000 mg/l TDS Concentration or Less, Human Health Standards, Other Standards for Domestic Water Supply, and Standards for Irrigation Use.

NMED (New Mexico Environment Department), 2004. Holloman AFB Hazardous Waste Facility Permit No. NM65721244122. February.

NMED (New Mexico Environment Department), 2006a. New Mexico Environment Department TPH Screening Guidelines. October

NMED (New Mexico Environment Department), 2006b. Notice of Deficiency, Supplemental RFI Work Plan, SWMUs 101, 104, 105, 108, 109, 113B, 115, 116, 165, 177, 179, and 181, July 2005, Holloman Air Force Base, Alamogordo, New Mexico. January 17.

NMED (New Mexico Environment Department), 2007. Letter of Approval regarding Supplemental RFI Workplan Addendum as modified by Response to NOD; January 17.

NMED, 2009. *Technical Background Document for Development of Soil Screening Levels, Revision 5.0,* August.

New Mexico Water Resources Research Institute (NMWRRI), 2005. Proceedings, 49th Annual New Mexico Water Conference, Water Desalination and reuse Strategies for New Mexico.

Radian Corporation, 1992. RI, Report, Volume II of III, Appendices A, B, C, and D, Investigation, Study and Recommendation for 29 Waste Sites.

Radian Corporation, 1994. Draft Final Phase I RCRA Facility Investigation Report, Table 2 Solid Waste Management Units, Volume 1, Holloman AFB, New Mexico. October.

Tetra Tech, Inc. (Tetra Tech), 2009. *SS-39 Missile Fuel Spill Area (SWMUs 165, 177, 179, and 181) Accelerated Corrective Measures Work Plan, Holloman Air Force Base, Alamogordo, New Mexico,* April.

Tetra Tech, 2010. *Performance Based Restoration Project Health and Safety Plan, Holloman Air Force Base, New Mexico,* December.

Tetra Tech, 2011. *Draft Long-Term Monitoring Report, July 2010 – January 2011for DP-30/SD-33 (SWMU 113B), SD-27 (SWMU 141), and SS-39 (SWMUs 165, 167, 177, 179, and 181), Holloman Air Force Base, New Mexico*, September.

USAF (United States Department of the Air Force), 2004. Memorandum for New Mexico Environment Department regarding Characterization Requirements for Seven Solid Waste Management Units (SWMUs) at Holloman AFB, New Mexico. May 21.

USDA (US Department of Agriculture), 1981. Soil Survey of Otero Area, New Mexico; Parts of Otero, Eddy, and Chaves Counties. Soil Conservation Services and Forest Service.

U.S. Environmental Protection Agency (EPA), 1986. Guidelines for Groundwater Classification Under the USEPA Groundwater Protection Strategy, Final Draft. Office of Groundwater Protection (WH-550G), Washington, D.C. December.

EPA, 2000. Soil Screening Guidance for Radionuclides: Technical Background Document (EPA/540-R-00-006). October.

EPA, 2002. *OWSER Draft Guidance for Evaluating the Vapor Intrusion to Indoor Air Pathway for Groundwater and Soils (Subsurface Vapor Intrusion Guidance)*, EPA 530-D-02-004, November.

EPA, 2004. *User's Guide for Evaluating Subsurface Vapor Intrusion Into Buildings,* Prepared By: Environmental Quality Management, Inc., Durham, NC, February.

.EPA Reg IV (U.S. Environmental Protection Agency Region IV), 2007. Region 6 Human Health Medium Specific Screening Levels 2007.

This Page Intentionally Left Blank

TABLES

Table 3-1
Screening of 1991 Remedial Investigation Soil Analytical Results for Direct Contact Risk
SS-39 (SWMUs 165, 177, 179, and 181) – Missile Fuel Spill Area
Holloman AFB, New Mexico

Analyses [1]	NMED Soil Screening Levels[2]			SB-39-01		SB-39-02		HA-39-01	HA-39-02	HA-39-03	HA-39-04	HA-39-05
			Construction	91JULHO39-001	91JULHO39-002	91JULHO39-003	91JULHO39-004	91JULHO39-007	91JULHO39-008	91JULHO39-009	91JULHO39-005	91JULHO39-006
	Residential	Industrial	Worker	7.5- 9.5 ft	10- 12 ft	10- 12 ft	15- 17 ft	0- 2 ft	0-2 ft	0-2 ft	0- 2 ft	0-2 ft
SW820 - Volatile Organics (µg/kg)												
1,1,1- Trichloroethane	21800000	77100000	64300000	< 130	430000	87000	900	< 140	< 110	< 150	< 120	< 130
1,1,2- Trichloroethane	17200	94300	1240000	< 130	95	< 140	< 140	< 140	< 110	< 150	< 120	< 130
1,1 - Dichloroethane	62900	350000	6880000	< 130	260	170	69	< 140	< 110	< 150	< 120	< 130
1,1 - Dichloroethene	618000	2220000	1830000	< 130	< 130	< 140	44	< 140	18	< 150	< 120	22
1,2 - Dichloroethane	7740	42800	751000	< 130	140	< 140	< 140	< 140	< 110	< 150	< 120	< 130
Chloromethane	35600	198000	1130000	44	< 270	< 280	< 270	< 280	< 230	< 300	< 240	< 260
Ethyl benzene	69600	385000	6630000	2.9	4.3	81	< 140	< 140	< 110	< 150	< 120	5.9
Methylene chloride	199000	1090000	10600000	510	630	1400	530	720	350	36	54	260
Tetrachloroethene	6990	36400	338000	< 130	430	*95000*	300	< 140	< 110	< 150	< 120	28
Toluene	5570000	57900000	21100000	12B	3400	82B	12B	91.1	8	9.1	8.9	9.3
Trichloroethene	45700	253000	4600000	< 130	40000	11000	47	< 140	< 110	< 150	< 120	< 130
Xylenes	1090000	3610000	3130000	8.1	23	290	< 140	< 140	< 110	< 150	38	13
EPA 418.1 - TRPH (mg/kg) [3]	760	1810	na	678	26.3	*2620*	543	50.2	660	**811**	*20700*	95.6
SW6010 - Metals (mg/kg)												
Beryllium	156	2260	144	< 0.36	< 0.49	< 0.45	0.58	< 0.46	0.57	0.58	< 0.48	< 0.47
Cadmium	77.9	1120	309	0.98	< 1.2	30	4.3	< 1.2	7.3	7.8	38	4
Chromium	219	2920	449	5.6	3.2	78	25	8.6	26	47	190	130
Copper	3130	45400	12400	6	< 4.9	82	5.1	14	91	140	110	19
Nickel	1560	22700	6190	< 3.6	< 4.9	14	8.6	6.5	23	21	31	58
Silver	391	5680	1550	< 1.8	< 2.4	< 2.3	< 2.4	< 2.3	< 1.8	12	< 2.4	< 2.4
Zinc	23500	341000	92900	52	8.4	380	60	30	250	180	540	130
SW7060 - Arsenic (mg/kg)	3.59	17.7	65.4	2.6	0.66	2	2	1.6	*28*	*34*	**3.7**	0.99
SW7421 - Lead (mg/kg)	400	800	800	16	1	77	9.2	180	*1300*	*1100*	210	10
SW7471 - Mercury (mg/kg)	7.71	49.9	63.6	< 0.056	< 0.064	< 0.068	< 0.060	< 0.064	0.063	< 0.069	0.074	< 0.060

NOTES:
Table presents only constituents detected in soil at this site.
"D, B, J" lab qualifiers deleted and treated as positive detects for screening; "<" treated as not detected and not screened.
(1) Hexavalent Screening criteria used as a surrogate for total chromium.
(2) NMED Soil Screening Levels: NEW MEXICO ENVIRONMENT DEPARTMENT Hazardous Waste Bureau and Ground Water Quality Bureau Voluntary Remediation Program, Table A-1, TECHNICAL BACKGROUND DOCUMENT FOR DEVELOPMENT OF SOIL SCREENING LEVELS, REVISION 5.0, July 2009
(3) Kerosene/Jet Fuel TPH SSL obtained from Table 2a (NMED, 2006a).
NA = not analyzed
na = not applicable
ND = not detected, reported at detection limit.
mg/kg = milligrams per kilogram
µg/kg = micrograms per kilogram
TRPH = total recoverable petroleum hydrocarbons
< = Analyte not detected at reported detection limit

Laboratory Qualifier
D = secondary dilution required for this analyte.
B = analyte detected in laboratory blank analysis, no blank subtraction performed

Validation Qualifier
J = detected below the detection limit.

Red indicates > Residential SSLs for direct contact
Italics indicates > Commerical/Industrial SSLs for direct contact
Yellow shade indicates > Construction Worker SSLs for direct contact

Table 3-2
Screening of Phase II RFI Soil Analytical Results for Direct Contact Risk
SS-39 (SWMUs 165, 177, 179, and 181) – Missile Fuel Spill Area
Holloman AFB, New Mexico

Analyses [1]	NMED Soil Screening Levels[2]			179-A01	179-A01	179-A01	179-A02	179-A02	179-A02	179-A03	179-A03	179-A03	179-A04	179-A04	179-A04
				179A01-01-01	179-A01-02-01	179-A01-03-01	179-A02-01-01	179A02-02-01	179-A02-03-01	179-A03-01-01	179-A03-02-01	179A03-03-01	179-A04-01-01	179-A04-02-01	179-A04-03-01
	Residential	Industrial	Construction	0-2 ft bgs	2-4 ft bgs	8-10 ft bgs	2-4 ft bgs	4-6 ft bgs	8-10 ft bgs	2-4 ft bgs	4-6 ft bgs	8-10 ft bgs	2-4 ft bgs	4-6 ft bgs	8-10 ft bgs
SW6010-Metals (mg/kg)															
Barium	15,600	224,000	4,350	84	80	143	41.7	32	48	36.6	30.7	25.2	33.1	22.9	57.5
Cadmium	77.9	1120	309	11.3	22.4	6.3	2.33	<0.314	<0.28	0.296	<0.288	<0.267	1.09	0.582	<0.253
Chromium	219	2920	449	47.8	188	38.6	12.8	4.05	8.71	8.14	4.59	3.67	4.84	4.61	11.1
Silver	391	5,680	1,550	<0.159	1.5	0.282	<0.169	<0.2	<0.179	<0.18	<0.183	<0.171	<0.153	<0.169	<0.161
SW7421-Lead (mg/kg)															
Lead	400	800	800	109	94.2	22.6	5.84	0.592	0.11	6.77	1.1	0.535	43.8	44.4	13.6

NOTES:
Table presents only constituents detected in soil at this site.
"B, J, S" lab qualifiers deleted and treated as positive detects for screening; "<" treated as not detected and not screened.
(1) Hexavalent Screening criteria used as a surrogate for total chromium.
(2) NMED Soil Screening Levels: NEW MEXICO ENVIRONMENT DEPARTMENT Hazardous Waste Bureau and Ground Water Quality Bureau Voluntary Remediation Program, Table A-1, TECHNICAL BACKGROUND DOCUMENT FOR DEVELOPMENT OF SOIL SCREENING LEVELS, REVISION 5.0, July 2009
NA = not analyzed
na = not applicable
ND = not detected, reported at detection limit.
mg/kg = milligrams per kilogram
TRPH = total recoverable petroleum hydrocarbons
< = Analyte not detected at reported detection limit

Laboratory Qualifier
D = secondary dilution required for this analyte.
B = analyte detected in laboratory blank analysis, no blank subtraction performed
S =Lab-specific qualifer (no information provided)
Validation Qualifier
J = detected below the detection limit.

Red indicates > Residential SSLs for direct contact
Italics indicates > Commerical/Industrial SSLs for direct contact
Yellow shade indicates > Construction Worker SSLs for direct contact

Table 3-2 continued
Screening of Phase II RFI Soil Anaytical Results for Direct Contact Risk
SS-39 (SWMUs 165, 177, 179, and 181) - Missile Fuel Spill Area
Holloman AFB, New Mexico

Analyses [1]	NMED Soil Screening Levels[2]			179-A05	179-A05	179-A05	179-B01	179-B01	179-B01	179-B01	179-B02	179-B02	179-B02	179-B02
				179A05-01-01	179-A05-02-01	179-A05-03-01	179-B01-01-01	179B01-02-01	179-B01-03-01	179-B01-04-01	179-B02-01-01	179B02-02-01	179-B02-03-01	179-B02-04-01
	Residential	Industrial	Construction	0-2 ft bgs	4-6 ft bgs	8-10 ft bgs	0-2 ft bgs	2-4 ft bgs	4-6 ft bgs	6-8 ft bgs	0-2 ft bgs	2-4 ft bgs	4-6 ft bgs	6-8 ft bgs
SW8270-SVOCs[3]														
Acetophenone	7,820	114,000	31,000	NA	NA	NA	ND	NA	NA	NA	ND	NA	NA	NA
Anthracene	17,200	183,000	66,800	NA	NA	NA	ND	NA	NA	NA	ND	NA	NA	NA
Benzo(a)anthracene	4.81	23.4	213	NA	NA	NA	ND	NA	NA	NA	ND	NA	NA	NA
Benzo(a)pyrene	0.481	2.34	21.3	NA	NA	NA	ND	NA	NA	NA	ND	NA	NA	NA
Benzo(b)fluoranthene	4.81	23.4	213	NA	NA	NA	ND	NA	NA	NA	ND	NA	NA	NA
Benzo(g,h,i)perylene	na	na	na	NA	NA	NA	ND	NA	NA	NA	ND	NA	NA	NA
Benzo(k)fluoranthene	48.1	234	2,060	NA	NA	NA	ND	NA	NA	NA	ND	NA	NA	NA
Chrysene	481	2,340	20,600	NA	NA	NA	ND	NA	NA	NA	ND	NA	NA	NA
Di-n-octylphthalate	na	na	na	NA	NA	NA	ND	NA	NA	NA	ND	NA	NA	NA
bis(2-Ethylhexyl)phthalate	280	1,370	4,760	NA	NA	NA	ND	NA	NA	NA	ND	NA	NA	NA
Fluoranthene	2,290	24,400	8,910	NA	NA	NA	ND	NA	NA	NA	ND	NA	NA	NA
Indeno(1,2,3-cd)pyrene	4.81	23.4	213	NA	NA	NA	ND	NA	NA	NA	ND	NA	NA	NA
Phenanthrene	1,830	20,500	7,150	NA	NA	NA	ND	NA	NA	NA	ND	NA	NA	NA
Pyrene	1,720	18,300	6,680	NA	NA	NA	ND	NA	NA	NA	ND	NA	NA	NA
SW6010-Metals (mg/kg)														
Barium	15,600	224,000	4,350	52.9	38.8	62	44	60.8	77.1	37.4	41.2	38.5	67.8	34.7
Cadmium	77.9	1120	309	0.364	0.332	0.796	<0.29	<0.279	<0.266	<0.273	<0.282	<0.232	<0.254	<0.27
Chromium	219	2920	449	10.6	15.8	7.74	7.18	6.43	7.09	5.97	6.68	7.18	8.96	5.61
Silver	391	5,680	1,550	<0.139	<0.151	<0.122	0.239	0.282	<0.17	0.207	<0.18	0.183	<0.162	<0.172
SW7421-Lead (mg/kg)														
Lead	400	800	800	275	59.2	46.3	14.4	2.29	2.28	1.84	5.38	1.57	1.46	0.43

NOTES:
Table presents only constituents detected in soil at this site.
"B, J, S" lab qualifiers deleted and treated as positive detects for screening; "<" treated as not detected and not screened.
(1) Hexavalent Screening criteria used as a surrogate for total chromium.
(2) NMED Soil Screening Levels: NEW MEXICO ENVIRONMENT DEPARTMENT Hazardous Waste Bureau and Ground Water Quality Bureau Voluntary Remediation Program, Table A-1, TECHNICAL BACKGROUND DOCUMENT FOR DEVELOPMENT OF SOIL SCREENING LEVELS, REVISION 5.0, July 2009
(3) Units not provided, assumed to be mg/kg.
NA = not analyzed
na = not applicable
ND = not detected, reported at detection limit.
mg/kg = milligrams per kilogram
TRPH = total recoverable petroleum hydrocarbons
< = Analyte not detected at reported detection limit

Laboratory Qualifier
D = secondary dilution required for this analyte.
B = analyte detected in laboratory blank analysis, no blank subtraction performed
S =Lab-specific qualifer (no information provided)
Validation Qualifier
J = detected below the detection limit.

Red indicates > Residential SSLs for direct contact
Italics indicates > Commerical/Industrial SSLs for direct contact
Yellow shade indicates > Construction Worker SSLs for direct contact

Table 3-2 continued
Screening of Phase II RFI Soil Anaytical Results for Direct Contact Risk
SS-39 (SWMUs 165, 177, 179, and 181) - Missile Fuel Spill Area
Holloman AFB, New Mexico

Analyses [1]	NMED Soil Screening Levels[2]			179-B03	179-B03	179-B03	179-B03	179-B04	179-B04	179-B05	179-B05	179-B05	179-B05	179-B06
				179-B03-01-01	179B03-02-01	179-B03-03-01	179-B03-04-01	179-B04-01-01	179B04-02-01	179-B05-01-01	179-B05-02-01	179-B05-03-01	179B05-04-01	179-B06-01-01
	Residential	Industrial	Construction	0-2 ft bgs	2-4 ft bgs	4-6 ft bgs	6-8 ft bgs	0-2 ft bgs	2-4 ft bgs	0-2 ft bgs	2-4 ft bgs	4-6 ft bgs	12-14 ft bgs	0-2 ft bgs
SW8270-SVOCs[3]														
Acetophenone	7,820	114,000	31,000	ND	NA	NA	NA	ND	NA	ND	NA	NA	NA	0.0234
Anthracene	17,200	183,000	66,800	ND	NA	NA	NA	ND	NA	ND	NA	NA	NA	0.024
Benzo(a)anthracene	4.81	23.4	213	ND	NA	NA	NA	ND	NA	ND	NA	NA	NA	0.119
Benzo(a)pyrene	0.481	2.34	21.3	ND	NA	NA	NA	ND	NA	ND	NA	NA	NA	0.0985
Benzo(b)fluoranthene	4.81	23.4	213	ND	NA	NA	NA	ND	NA	ND	NA	NA	NA	0.17
Benzo(g,h,i)perylene	na	na	na	ND	NA	NA	NA	ND	NA	ND	NA	NA	NA	0.0232
Benzo(k)fluoranthene	48.1	234	2,060	ND	NA	NA	NA	ND	NA	ND	NA	NA	NA	0.17
Chrysene	481	2,340	20,600	0.0167	NA	NA	NA	ND	NA	ND	NA	NA	NA	0.152
Di-n-octylphthalate	na	na	na	ND	NA	NA	NA	ND	NA	ND	NA	NA	NA	1.02
bis(2-Ethylhexyl)phthalate	280	1,370	4,760	ND	NA	NA	NA	ND	NA	ND	NA	NA	NA	0.281
Fluoranthene	2,290	24,400	8,910	0.0169	NA	NA	NA	ND	NA	ND	NA	NA	NA	0.23
Indeno(1,2,3-cd)pyrene	4.81	23.4	213	ND	NA	NA	NA	ND	NA	ND	NA	NA	NA	0.0351
Phenanthrene	1,830	20,500	7,150	ND	NA	NA	NA	ND	NA	ND	NA	NA	NA	0.124
Pyrene	1,720	18,300	6,680	0.0159	NA	NA	NA	ND	NA	ND	NA	NA	NA	0.206
SW6010-Metals (mg/kg)														
Barium	15,600	224,000	4,350	50.6	44.5	37.7	73.1	38.9	54.6	39.9	56	22.9	114	50.1
Cadmium	77.9	1120	309	0.499	<0.291	<0.272	<0.263	<0.304	<0.236	<0.262	<0.287	<0.247	<0.219	0.57
Chromium	219	2920	449	8.36	6.73	5.82	8.79	7.84	4.93	5.73	8.95	4.11	14.3	10.7
Silver	391	5,680	1,550	0.178	0.238	<0.173	0.392	0.55	<0.15	<0.167	0.286	<0.158	<0.14	0.233
SW7421-Lead (mg/kg)														
Lead	400	800	800	0.256	4.91	0.494	1.62	5.22	0.531	6.07	4.44	2.48	5.98	288

NOTES:
Table presents only constituents detected in soil at this site.
"B, J, S" lab qualifiers deleted and treated as positive detects for screening; "<" treated as not detected and not screened.
(1) Hexavalent Screening criteria used as a surrogate for total chromium.
(2) NMED Soil Screening Levels: NEW MEXICO ENVIRONMENT DEPARTMENT Hazardous Waste Bureau and Ground Water Quality Bureau Voluntary Remediation Program, Table A-1, TECHNICAL BACKGROUND DOCUMENT FOR DEVELOPMENT OF SOIL SCREENING LEVELS, REVISION 5.0, July 2009
(3) Units not provided, assumed to be mg/kg.
NA = not analyzed
na = not applicable
ND = not detected, reported at detection limit.
mg/kg = milligrams per kilogram
TRPH = total recoverable petroleum hydrocarbons
< = Analyte not detected at reported detection limit

Laboratory Qualifier
D = secondary dilution required for this analyte.
B = analyte detected in laboratory blank analysis, no blank subtraction performed
S =Lab-specific qualifer (no information provided)
Validation Qualifier
J = detected below the detection limit.

Red indicates > Residential SSLs for direct contact
Italics indicates > Commerical/Industrial SSLs for direct contact
Yellow shade indicates > Construction Worker SSLs for direct contact

Table 3-2 continued
Screening of Phase II RFI Soil Anaytical Results for Direct Contact Risk
SS-39 (SWMUs 165, 177, 179, and 181) - Missile Fuul Spill Area
Holloman AFB, New Mexico

Analyses [1]	NMED Soil Screening Levels[2]			179-B06	179-B06	179-B06	179-B07	179-B07	179-B07	179-B07	179-B08	179-B08	179-B08	179-B08
				179-B06-02-01	179-B06-03-01	179B06-04-01	179-B07-01-01	179-B07-02-01	179-B07-03-01	179B07-04-01	179-B08-01-01	179-B08-02-01	179-B08-03-01	179B08-04-01
	Residential	Industrial	Construction	2-4 ft bgs	4-6 ft bgs	12-14 ft bgs	4-6 ft bgs	6-8 ft bgs	8-10 ft bgs	14-16 ft bgs	0-2 ft bgs	2-4 ft bgs	4-6 ft bgs	10-12 ft bgs
SW8270-SVOCs[3]														
Acetophenone	7,820	114,000	31,000	NA	NA	NA	ND	NA	NA	NA	ND	NA	NA	NA
Anthracene	17,200	183,000	66,800	NA	NA	NA	ND	NA	NA	NA	ND	NA	NA	NA
Benzo(a)anthracene	4.81	23.4	213	NA	NA	NA	ND	NA	NA	NA	ND	NA	NA	NA
Benzo(a)pyrene	0.481	2.34	21.3	NA	NA	NA	ND	NA	NA	NA	ND	NA	NA	NA
Benzo(b)fluoranthene	4.81	23.4	213	NA	NA	NA	ND	NA	NA	NA	ND	NA	NA	NA
Benzo(g,h,i)perylene	na	na	na	NA	NA	NA	ND	NA	NA	NA	ND	NA	NA	NA
Benzo(k)fluoranthene	48.1	234	2,060	NA	NA	NA	ND	NA	NA	NA	ND	NA	NA	NA
Chrysene	481	2,340	20,600	NA	NA	NA	ND	NA	NA	NA	ND	NA	NA	NA
Di-n-octylphthalate	na	na	na	NA	NA	NA	ND	NA	NA	NA	ND	NA	NA	NA
bis(2-Ethylhexyl)phthalate	280	1,370	4,760	NA	NA	NA	ND	NA	NA	NA	ND	NA	NA	NA
Fluoranthene	2,290	24,400	8,910	NA	NA	NA	ND	NA	NA	NA	ND	NA	NA	NA
Indeno(1,2,3-cd)pyrene	4.81	23.4	213	NA	NA	NA	ND	NA	NA	NA	ND	NA	NA	NA
Phenanthrene	1,830	20,500	7,150	NA	NA	NA	ND	NA	NA	NA	ND	NA	NA	NA
Pyrene	1,720	18,300	6,680	NA	NA	NA	ND	NA	NA	NA	ND	NA	NA	NA
SW6010-Metals (mg/kg)														
Barium	15,600	224,000	4,350	55	19.1	18.8	47	35	19.2	21.2	38.1	46.4	46.7	33.4
Cadmium	77.9	1120	309	0.578	<0.245	0.29	<0.288	<0.252	<0.252	<0.267	<0.276	<0.249	<0.21	<0.277
Chromium	219	2920	449	8.71	3.88	4.41	5.75	5.96	3.9	5.39	5.3	5.97	6.35	6.13
Silver	391	5,680	1,550	0.382	0.156	<0.175	<0.183	<0.161	<0.161	<0.17	0.6	<0.159	0.178	0.555
SW7421-Lead (mg/kg)														
Lead	400	800	800	28.6	0.782	0.56	0.933	1.42	0.616	1.36	12.5	1.56	2.05	3.54

NOTES:
Table presents only constituents detected in soil at this site.
"B, J, S" lab qualifiers deleted and treated as positive detects for screening; "<" treated as not detected and not screened.
(1) Hexavalent Screening criteria used as a surrogate for total chromium.
(2) NMED Soil Screening Levels: NEW MEXICO ENVIRONMENT DEPARTMENT Hazardous Waste Bureau and Ground Water Quality Bureau Voluntary Remediation Program, Table A-1, TECHNICAL BACKGROUND DOCUMENT FOR DEVELOPMENT OF SOIL SCREENING LEVELS, REVISION 5.0, July 2009
(3) Units not provided, assumed to be mg/kg.
NA = not analyzed
na = not applicable
ND = not detected, reported at detection limit.
mg/kg = milligrams per kilogram
TRPH = total recoverable petroleum hydrocarbons
< = Analyte not detected at reported detection limit

Laboratory Qualifier
D = secondary dilution required for this analyte.
B = analyte detected in laboratory blank analysis, no blank subtraction performed
S =Lab-specific qualifer (no information provided)
Validation Qualifier
J = detected below the detection limit.

Red indicates > Residential SSLs for direct contact
Italics indicates > Commerical/Industrial SSLs for direct contact
Yellow shade indicates > Construction Worker SSLs for direct contact

Table 3-3
Screening of 1994 Remedial Investigation Soil Analytical Results for Direct Contact Risk
SS-39 (SWMUs 165, 177, 179, and 181) - Missile Fuel Spill Area
Holloman AFB, New Mexico

Analytes	NMED Soil Screening Levels(1)			181-B01	181-B02
				181-B01-01-01	181-B02-01-01
	Residential	Industrial	Construction Worker	6-8 ft bgs	8-10 ft bgs
SW8270-Semi-volatiloe Organic Compounds (mg/kg)					
4-Chloro-3-methylphenol	6,100	62,000	na	ND	4.25
p-Chloroaniline	2	9	na	ND	1.69
Bis(2-Ethylhexyl)phthalate	280	1,370	4,760	ND	19.7
2-Methylnapthalene	310	4100	na	ND	6.05
Naphthalene	45	252	702	ND	1.91
SW8270-Semi-volatile Organic Compounds TICs (mg/kg)					
Ethylmethylbenzene	na	na	na	ND	50
Trimethylbenzene	na	na	na	ND	20

NOTES:
Table presents only constituents detected in soil at this site.
"B, S" lab qualifiers deleted and treated as positive detects for screening; "<" treated as not detected and not screened.
(2) NMED Soil Screening Levels: NEW MEXICO ENVIRONMENT DEPARTMENT Hazardous Waste Bureau and Ground Water Quality Bureau Voluntary Remediation Program, Table A-1, TECHNICAL BACKGROUND DOCUMENT FOR DEVELOPMENT OF SOIL SCREENING LEVELS, REVISION 5.0, July 2009.
Underlined screening levels from EPA June 2011 SL table.
NA = not analyzed
na = not applicable
ND = not detected, reported at detection limit.
mg/kg = milligrams per kilogram
µg/kg = micrograms per kilogram
ft bgs = feet below ground surface
TRPH = total recoverable petroleum hydrocarbons
< = Analyte not detected at reported detection limit
Laboratory Qualifier
D = secondary dilution required for this analyte.
B = analyte detected in laboratory blank analysis, no blank subtraction performed
TICs = tentatively identified compounds
Validation Qualifier
J = detected below the detection limit.

Red indicates > Residential SSLs for direct contact
Italics indicates > Commerical/Industrial SSLs for direct contact
Yellow shade indicates > Construction Worker SSLs for direct contact

Table 3-4
Screening of Sediment Analytical Results for Direct Contact Risk
SS-39 (SWMUs 165, 177, 179, and 181) – Missile Fuel Spill Area
Holloman AFB, New Mexico

Analyte [1]	NMED Soil Screening Levels[2]			SD39-01 19-May-2006 0.00-1.00 ft.	
	Residental	Industrial	Construction Worker	Val	Q
Semi-Volatile Organic Compounds (µg/kg)					
Acetophenone	7,820,000	114,000,000	31,000,000	2680	
Diethyl phthalate	48,900,000	547,000,000	191,000,000	932	J
Dimethyl phthalate	611,000,000	6,840,000,000	2,380,000,000	1,120	J
Metals (mg/kg)					
Barium	15,600	224,000	4,350	168	
Cadmium	77.9	1120	309	7.31	
Chromium, total	219	2920	449	43.2	
Lead	400	800	800	*1,430*	
Mercury	7.71	49.9	63.6	0.0516	
Silver	391	5680	1550	0.136	J

NOTES:

(1) Sample analyzed for SVOCs (UDHM), aniline, and RCRA metals. UDMH and aniline not detected. Hexavalent Screening criteria used as a surrogate for total chromium.

(2) NMED Soil Screening Levels: NEW MEXICO ENVIRONMENT DEPARTMENT Hazardous Waste Bureau and Ground Water Quality Bureau Voluntary Remediation Program, Table A-1, TECHNICAL BACKGROUND DOCUMENT FOR DEVELOPMENT OF SOIL SCREENING LEVELS, REVISION 5.0, July 2009.

Underlined screening levels from EPA June 2011 SL table.
NA = not analyzed
na = not applicable
ND = not detected, reported at detection limit.
mg/kg = milligrams per kilogram
µg/kg = micrograms per kilogram
ft bgs = feet below ground surface
TRPH = total recoverable petroleum hydrocarbons
UDMH = unsymmetrical dimethylhydrazine
< = Analyte not detected at reported detection limit

Laboratory Qualifier

D = secondary dilution required for this analyte.
B = analyte detected in laboratory blank analysis, no blank subtraction performed
TICs = tentatively identified compounds

Validation Qualifier

J = detected below the detection limit.

Red indicates > Residential SSLs for direct contact
Italics indicates > Commerical/Industrial SSLs for direct contact
Yellow shade indicates > Construction Worker SSLs for direct contact

Table 3-5
Screening of Soil Analytical Results for Direct Contact Risk
SS-39 (SWMUs 165, 177, 179, and 181) - Missile Fuel Spill Area
Holloman AFB, New Mexico

Analyte [1]	NMED Soil Screening Levels[2]			SB3901R 18-May-2006				SB3902R 18-May-2006						SB39-17 18-May-2006				HA3901R 18-May-2006				HA3902R 18-May-2006			
				2.00-4.00 ft.		8.00-10.00 ft.		2.00-4.00 ft.		8.00-10.00 ft.		8.00-10.00 ft.		2.00-4.00 ft.		9.00-10.00 ft.		2.00-4.00 ft.		7.00-8.00 ft.		2.00-4.00 ft.		8.00-9.00 ft.	
	Residential	Industrial	Construction Worker	Val	Q	Val	Q	Val	Q	Val	Q	Val	Q	Val	Q	Val	Q	Val	Q	Val	Q	Val	Q	Val	Q
Metals (mg/kg)																									
Arsenic	3.59	17.7	65.4	0.228	U	0.228	U	0.228	U	0.228	U	0.228	U	0.228	U	0.228	U	**8.27**		0.228	U	0.228	U	0.228	U
Barium	15600	224,000	4,350	25.6		19.9		124		70.7		78.8		19.6		11.5		36.8		21.6		64.4		33.1	
Cadmium	77.9	1120	309	2.25		0.0795	U	36.3		23.4		50.7		0.0795	U	0.0795	U	0.294		0.0795	U	0.0795	U	0.0795	U
Chromium, total	219	2920	449	16.9		3.01		178		**287**		**290**		0.528	J	0.615	J	10.4		3.82		6.48		4.38	
Lead	400	800	800	18.8		0.65	U	342		177		**612**		0.65	U	0.65	U	102		53		20.7		5.05	
Mercury	7.71	49.9	63.6	0.0879		0.0088	U	0.435		0.0802		0.0625		0.0088	U	0.0088	U	0.0095	J	0.0088	U	0.0094	J	0.0088	U
Silver	391	5680	1,550	0.787		0.834		6.34		0.0444	U	0.0444	U	0.991		0.536		0.994		1.09		0.0444	U	0.473	

NOTES:
(1) Sample analyzed for SVOCs (UDHM), aniline, and RCRA metals. UDMH and aniline not detected.
Hexavalent Screening criteria used as a surrogate for total chromium.
(2) NMED Soil Screening Levels: NEW MEXICO ENVIRONMENT DEPARTMENT Hazardous Waste Bureau and Ground Water Quality Bureau Voluntary Remediation Program, Table A-1, TECHNICAL BACKGROUND DOCUMENT FOR DEVELOPMENT OF SOIL SCREENING LEVELS, REVISION 5.0, July 2009.
Underlined screening levels from EPA June 2011 SL table.
NA = not analyzed
na = not applicable
ND = not detected, reported at detection limit.
mg/kg = milligrams per kilogram
µg/kg = micrograms per kilogram
ft bgs = feet below ground surface
TRPH = total recoverable petroleum hydrocarbons
UDMH = unsymmetrical dimethylhydrazine
< = Analyte not detected at reported detection limit

Laboratory Qualifier
D = secondary dilution required for this analyte.
B = analyte detected in laboratory blank analysis, no blank subtraction performed
TICs = tentatively identified compounds

Validation Qualifier
J = detected below the detection limit.

Red indicates > Residential SSLs for direct contact
Italics indicates > Commerical/Industrial SSLs for direct contact
Yellow shade indicates > Construction Worker SSLs for direct contact

Table 3-6
Screening of 1991 Remedial Investigation Soil Analytical Results for Vapor Intrusion Risk
SS-39 (SWMUs 165, 177, 179, and 181) – Missile Fuel Spill Area
Holloman AFB, New Mexico

Analyses [1]	Vapor Intrusion [2]		SB-39-01		SB-39-02		HA-39-01	HA-39-02	HA-39-03	HA-39-04	HA-39-05
			91JULHO39-001	91JULHO39-002	91JULHO39-003	91JULHO39-004	91JULHO39-007	91JULHO39-008	91JULHO39-009	91JULHO39-005	91JULHO39-006
	1E-06	1E-05	7.5- 9.5 ft	10- 12 ft	10- 12 ft	15- 17 ft	0- 2 ft	0-2 ft	0-2 ft	0- 2 ft	0-2 ft
SW820 - Volatile Organics (µg/kg)											
1,1,1-Trichloroethane	5814	5814	< 130	***430000***	***87000***	900	< 140	< 110	< 150	< 120	< 130
1,1,2-Trichloroethane	6	56	< 130	***95***	< 140	< 140	< 140	< 110	< 150	< 120	< 130
1,1-Dichloroethane	1676	1676	< 130	260	170	69	< 140	< 110	< 150	< 120	< 130
1,1-Dichloroethene	287	287	< 130	< 130	< 140	44	< 140	18	< 150	< 120	22
1,2-Dichloroethane	1.1	11	< 130	***140***	< 140	< 140	< 140	< 110	< 150	< 120	< 130
Chloromethane	3.3	33	***44***	< 270	< 280	< 270	< 280	< 230	< 300	< 240	< 260
Ethylbenzene	13726	44266	2.9	4.3	81	< 140	< 140	< 110	< 150	< 120	5.9
Methylene chloride	25	254	***510***	***630***	***1400***	***530***	***720***	***350***	***36***	***54***	***260***
Tetrachloroethene	1.3	13	< 130	***430***	***95000***	***300***	< 140	< 110	< 150	< 120	***28***
Toluene	3443	3443	12B	3400	82B	12B	91.1	8	9.1	8.9	9.3
Trichloroethene	0.1	1.1	< 130	***40000***	***11000***	***47***	< 140	< 110	< 150	< 120	< 130
o-Xylene	2027	2027	8.1	23	290	< 140	< 140	< 110	< 150	38	13
EPA 418.1 - TRPH (mg/kg)	na	na	678	26.3	2620	543	50.2	660	811	20700	95.6
SW6010 - Metals (mg/kg)											
Beryllium	na	na	< 0.36	< 0.49	< 0.45	0.58	< 0.46	0.57	0.58	< 0.48	< 0.47
Cadmium	na	na	0.98	< 1.2	30	4.3	< 1.2	7.3	7.8	38	4
Chromium	na	na	5.6	3.2	78	25	8.6	26	47	190	130
Copper	na	na	6	< 4.9	82	5.1	14	91	140	110	19
Nickel	na	na	< 3.6	< 4.9	14	8.6	6.5	23	21	31	58
Silver	na	na	< 1.8	< 2.4	< 2.3	< 2.4	< 2.3	< 1.8	12	< 2.4	< 2.4
Zinc	na	na	52	8.4	380	60	30	250	180	540	130
SW7060 - Arsenic (mg/kg)	na	na	2.6	0.66	2	2	1.6	28	34	3.7	0.99
SW7421 - Lead (mg/kg)	na	na	16	1	77	9.2	180	1300	1100	210	10
SW7471 - Mercury (mg/kg)	1.12	1.12	< 0.056	< 0.064	< 0.068	< 0.060	< 0.064	0.063	< 0.069	0.074	< 0.060

Notes:

NOTE: "D, B, J" lab qualifiers deleted and treated as positive detects for screening;
"<" indicates not detected and was not screened.

Red indicates > 1e-6 VI risk level for indoor air.

Yellow shade indicates > 1e-5 VI risk level for indoor air.

(1) Hexavalent Screening criteria used as a surrogate for total chromium.

(2) Johnson and Ettinger (1991) Model for Subsurface Vapor Intrusion into Buildings incorporated into Appendix G of of the EPA OSWER Draft Guidance for Evaluating the Vapor Intrusion to Indoor Air Pathway (November, 2002).

ND = not detected, reported at detection limit.
NA = not analyzed
na = not applicable
mg/kg = milligrams per kilogram
µg/kg = micrograms per kilogram
TRPH = total recoverable petroleum hydrocarbons

Validation Qualifier
J = detected below the detection limit.

Laboratory Qualifier
D = secondary dilution required for this analyte.
B = analyte detected in laboratory blank analysis, no blank subtraction performed

Table 3-7
Screening of 1994 Remedial Investigation Soil Analytical Results for Vapor Intrusion Risk
SS-39 (SWMUs 165, 177, 179, and 181) - Missile Fuel Spill Area
Holloman AFB, New Mexico

Analytes	Vapor Intrusion (1)		181-B01	181-B02
			181-B01-01-01	181-B02-01-01
	1E-06	1E-05	6-8 ft bgs	8-10 ft bgs
SW8270-Semi-volatiloe Organic Compounds (mg/kg)				
4-Chloro-3-methylphenol	na	na	ND	4.25
p-Chloroaniline	na	na	ND	1.69
Bis(2-Ethylhexyl)phthalate	na	na	ND	19.7
2-Methylnapthalene	na	na	ND	6.05
Naphthalene	4.8	4.8	ND	1.91
SW8270-Semi-volatile Organic Compounds TICs (mg/kg)				
Ethylmethylbenzene	na	na	ND	50
Trimethylbenzene	na	na	ND	20

Notes:

NOTE: B, S" lab qualifiers deleted and treated as positive detects for screening;
"<" treated as not detected and not screened.

Red indicates > 1e-6 VI risk level for indoor air.

Yellow shade indicates > 1e-5 VI risk level for indoor air.

(1) Johnson and Ettinger (1991) Model for Subsurface Vapor Intrusion into Buildings incorporated into Appendix G of of the EPA OSWER Draft Guidance for Evaluating the Vapor Intrusion to Indoor Air Pathway (November, 2002).

RCRA = Resource Conservation and Recovery Act

SMWUs= Solid Waste Management Units

RFI = RCRA Facility Investigation

AFB= Air Force Base

ft = feet

bgs = below ground surface

mg/kg = milligrams per kilogram

ND = not detected; NA = not analyzed; na = not applicable

B = analyte detected in associated blank analyses

TICs = tentatively identified compounds

Table 3-8
Screening of Sediment Analytical Results for Vapor Intrusion Risk
SS-39 (SWMUs 165, 177, 179, and 181) – Missile Fuel Spill Area
Holloman AFB, New Mexico

Analyses (1)	Vapor Intrusion (2)		SD39-01 19-May-2006	
			0.00-1.00 ft.	
	1E-06	1E-05	Val	Q
Semi-Volatile Organic Compounds (µg/kg)				
Acetophenone	na	na	2680	
Diethyl phthalate	na	na	932	J
Dimethyl phthalate	na	na	1,120	J
Metals (mg/kg)				
Barium	na	na	168	
Cadmium	na	na	7.31	
Chromium, total	na	na	43.2	
Lead	na	na	1,430	
Mercury	1.12	1.12	0.0516	
Silver	na	na	0.136	J

NOTES:

NOTE: B, S" lab qualifiers deleted and treated as positive detects for screening;
"<" treated as not detected and not screened.

Red indicates > 1e-6 VI risk level for indoor air.

Yellow shade indicates > 1e-5 VI risk level for indoor air.

(1) Sample analyzed for SVOCs (UDHM), aniline, and RCRA metals. UDMH and aniline not detected.
Hexavalent Screening criteria used as a surrogate for total chromium.

(2) Johnson and Ettinger (1991) Model for Subsurface Vapor Intrusion into Buildings incorporated into Appendix G of of the EPA OSWER Draft Guidance for Evaluating the Vapor Intrusion to Indoor Air Pathway (November, 2002).

mg/kg = milligrams per kilogram

ND = not detected; NA = not analyzed; na = not applicable

ft = feet

UDMH = unsymmetrical dimethylhydrazine

Val = validated results

Q = data qualifier

J = estimated positive detection

Table 3-9
Screening of Soil Analytical Results for Vapor Intrusion Risk
SS-39 (SWMUs 165, 177, 179, and 181) - Missile Fuel Spill Area
Holloman AFB, New Mexico

Analyses [1]	Vapor Intrusion [2]		SB3901R 18-May-2006				SB3902R 18-May-2006						SB39-17 18-May-2006				HA3901R 18-May-2006				HA3902R 18-May-2006			
	1E-06	1E-05	2.0-4.0 ft.		8.0-10.0 ft.		2.0-4.0 ft.		8.0-10.0 ft.		8.0-10.0 ft.		2.0-4.0 ft.		9.0-10.0 ft.		2.0-4.0 ft.		7.0-8.0 ft.		2.0-4.0 ft.		8.0-9.0 ft.	
			Val	Q	Val	Q	Val	Q	Val	Q	Val	Q	Val	Q	Val	Q	Val	Q	Val	Q	Val	Q	Val	Q
Metals (mg/kg)																								
Arsenic	na	na	0.228	U	0.228	U	0.228	U	0.228	U	0.228	U	0.228	U	0.228	U	8.27		0.228	U	0.228	U	0.228	U
Barium	na	na	25.6		19.9		124		70.7		78.8		19.6		11.5		36.8		21.6		64.4		33.1	
Cadmium	na	na	2.25		0.0795	U	36.3		23.4		50.7		0.0795	U	0.0795	U	0.294		0.0795	U	0.0795	U	0.0795	U
Chromium, total	na	na	16.9		3.01		178		287		290		0.528	J	0.615	J	10.4		3.82		6.48		4.38	
Lead	na	na	18.8		0.65	U	342		177		612		0.65	U	0.65	U	102		53		20.7		5.05	
Mercury	1.12	1.12	0.0879		0.0088	U	0.435		0.0802		0.0625		0.0088	U	0.0088	U	0.0095	J	0.0088	U	0.0094	J	0.0088	U
Silver	na	na	0.787		0.834		6.34		0.0444	U	0.0444	U	0.991		0.536		0.994		1.09		0.0444	U	0.473	

Notes:
NOTE: B, S" lab qualifiers deleted and treated as positive detects for screening; "<" treated as not detected and not screened.
Red indicates > 1e-6 VI risk level for indoor air.
Yellow shade indicates > 1e-5 VI risk level for indoor air.
(1) Samples analyzed for UDMH, aniline, and RCRA metals. UDMH and aniline not detected.
Hexavalent Screening criteria used as a surrogate for total chromium.
(2) Johnson and Ettinger (1991) Model for Subsurface Vapor Intrusion into Buildings incorporated into Appendix G of of the EPA OSWER Draft Guidance for Evaluating the Vapor Intrusion to Indoor Air Pathway (November, 2002).
(4) Duplicate
NMED = New Mexico Environment Department
mg/kg = milligrams per kilogram
ft = feet
Val = validated result
Q = data qualifier
U = non-detect result, value presented indicates reporting limit
J = estimated positive detection
UDMH = unsymmetrical dimethylhydrazine
U = not detected; NA = not analyzed; na = not applicable
Bolded value indicates analyte concentration exceeds NMED residential SSL

Table 3-10
Screening 1991 Remedial Investigation Groundwater Analytical Results for
Direct Contact and Vapor Intrusion Risk
SS-39 (SWMUs 165, 177, 179, and 181) - Missile Fuel Spill Area
Holloman AFB, New Mexico

Analytes	NMED Tapwater[1]	Vapor Intrusion [2]	MW-39-01 39-01-01	MW-39-02 39-02-01	MW-39-03 39-03-01	MW-39-04 39-04-01
SW8240 - Volatile Organic Compounds (µg/L)						
1,1,1-Trichloroethane	9130	3100	< 5.0	240	< 5.0	1.8
1,1-Dichloroethane	24.2	2200	< 5.0	0.59	< 5.0	< 5.0
1,1-Dichloroethene	340	190	< 5.0	9.6	< 5.0	< 5.0
Acetone	21800	220000	24	< 100	3.5	< 100
Carbon tetrachloride	1.99	5	< 5.0	**5.8**	< 5.0	< 5.0
Chloroform	1.93	80	0.35	**2.1**	0.81	< 5.0
Chloromethane	17.8	67	< 10	0.72	< 10	< 10
Methylene chloride	48	580	14 B	10 B	15 B	15 B
Tetrachloroethene	1.08	11	0.19	**1.1**	0.37	< 5.0
Trichloroethene	16.5	5	0.25	**59**	2.7	< 5.0
EPA 160.1 -Total Dissolved Solids (mg/L)	10,000	n/a	**11,000**	**13,000**	**14,000**	2,600
EPA 300.0 -Chloride (mg/L)	n/a	n/a	2,200	4,200	4,500	39
EPA 300.0 -Sulfate (mg/L)	--	n/a	4,300	4,400	3,500	< 0.050
EPA 340.2 -Fluoride (mg/L)	n/a	n/a	1.8	1.5	1.9	0.77
EPA 353.1 -Nitrate-Nitrite (mg/L)	58.4	n/a	48	**87**	49	0.52
EPA 365.2 -Total Phosphorus (mg/L)	n/a	n/a	0.22	0.18	0.21	0.093
SW6010 - Metals (µg/L)						
Beryllium	73	n/a	< 0.2	2.9	2.5	< 2.0
Cadmium	18.3	n/a	< 0.5	5.9	< 5.0	< 5.0
Chromium	100	n/a	< 10	20	21	< 10
Copper	1460	n/a	< 20	< 20	120	< 20
Nickel	730	n/a	< 20	30	38	< 20
Zinc	11000	n/a	< 20	71	58	24
SW7421 - Lead (µg/L)	15	n/a	< 30	7.8	11	**19**
SW7740 - Selenium (µg/L)	183	n/a	< 5	15	13	< 5.0

Notes:

Data quality flags (D, J) removed and results treated as detects for screening.

[1] NMED Tapwater Screening Levels: NEW MEXICO ENVIRONMENT DEPARTMENT Hazardous Waste Bureau and Ground Water Quality Bureau Voluntary Remediation Program, Table A-1, TECHNICAL BACKGROUND DOCUMENT FOR DEVELOPMENT OF SOIL SCREENING LEVELS, REVISION 5.0, July 2009. Underlined value indicates EPA MCL.

[2] EPA OSWER Draft Guidance for Evaluating the Vapor Intrusion to Indoor Air Pathway from Groundwater and Soils (Subsurface Vapor Intrusion Guidance) Table 2b November 2002

Bold results exceed the New Mexico Tapwater Screening Level.

Highlighted result exceedes the Vapor Intrusion 1E-5 Risk Screening Level.

µg/L - micrograms per liter

mg/kg - milligrams per kilogram

n/a - not applicable

B - Analyte detected in associated blank analyses

D - The positive value is the result of an analysis at a secondary dilution factor.

J - Estimated quantity.

U - Analyte not detected above reporting detection limit shown.

Table 3-11
Screening Phase II RCRA Facility Investigation Groundwater Analytical Results for
Direct Contact and Vapor Intrusion Risk
SS-39 (SWMUs 165, 177, 179, and 181) - Missile Fuel Spill Area
Holloman AFB, New Mexico

SWMU 177 Analytes	NMED Tapwater[1]	Vapor Intrusion [2]	177-H01	177-H02	177-H03	177-H04
			177-H01-01-01	177-H02-01-01	177-H03-01-01	177-H04-01-01
SW8010-Halogenated Volatile Organics (µg/L)						
1,1,1-Trichloroethane	9130	3100	3.73B	0.842B	418	1.76B
1,1-Dichloroethane	24.2	2200	<1.11	<1.11	**65.4**	<1.11
Chloroethane	20900	28000	<4	<4	<20	0.442
Chloromethane	17.8	67	2.38	<7.55	<37.8	0.761
Tetrachloroethene	1.08	11	<3.75	<3.75	**2.19**	0.353
Trichloroethene	16.5	5	**245**	**597**	**2,730**	**324**
Vinyl chloride	0.861	2.5	<7.55	**3.83**	<37.8	<7.55
trans-1,3-Dichloropropene	n/a	n/a	0.492	<3.6	<18	<3.6
SW8010-Halogenated Volatile Organics (µg/L)						
Trichloroethene	16.5	2.5	**38.8**	**27.6**	<3	4.5

SWMU 179 Analytes	NMED Tapwater[1]	Vapor Intrusion [2]	179-H01	179-H02	179-H03	179-H04
			179-H01-01-01	179-H02-01-01	179-H03-01-01	179-H04-01-01
SW8010-Halogenated Volatile Organics (µg/L)						
Trichloroethene	16.5	5	**38.8**	**27.6**	<3	4.5

Notes:
Data quality flags (K, J) removed and results treated as detects for screening.

[1] NMED Tapwater Screening Levels: NEW MEXICO ENVIRONMENT DEPARTMENT Hazardous Waste Bureau and Ground Water Quality Bureau Voluntary Remediation Program, Table A-1, TECHNICAL BACKGROUND DOCUMENT FOR DEVELOPMENT OF SOIL SCREENING LEVELS, REVISION 5.0, July 2009. Underline indicates EPA MCL.

[2] VI - EPA OSWER Draft Guidance for Evaluating the Vapor Intrusion to Indoor Air Pathway from Groundwater and Soils (Subsurface Vapor Intrusion Guidance) Table 2b November 2002

Bold results exceed the New Mexico Tapwater Screening Level.

Highlighted result exceedes the Vapor Intrusion 1E-5 Risk Screening Level.

RCRA - Resource Conservation and Recovery Act
SWMUs - Solid Waste Management Units
RFI - RCRA Facility Investigation
µg/L - micrograms per liter
n/a - not applicable
K - Peak did not meet method identification criteria. Analyte not detected on other GC column
B - Analyte detected in associated blank analyses
J - Analyte detected at concentration below the detection limit
< - Analyte not detected at the reported detection limit

Table 3-12
Screening 1998 Groundwater Analytical Results for
Direct Contact and Vapor Intrusion Risk
SS-39 (SWMUs 165, 177, 179, and 181) Missile Fuel Spill Area
Holloman AFB, New Mexico

Analytes	NMED Tapwater[1]	Vapor Intrusion[2]	SS39-01 (upgradient)	SS39-02	SS39-03	SS39-04	SS39-05	SS39-06	SS39-07
			5'	1'	2'	3'	4'	4'	4'
EPA SW-846 Method 8260A - Volatile Organic Compounds (µg/L)									
Acetone	21800	220000	<50	<20	<10	<10	<10	<10	<71
Benzene	7300	n/a	<5.0	<2.0	<1.0	<1.0	<1.0	<1.0	<7.1
Carbon disulfide	1040	560	<5.0	<2.0	<1.0	<1.0	<1.0	<1.0	<7.1
Carbon tetrachloride	1.99	5	1.4	<2.0	<1.0	<1.0	<1.0	<1.0	<7.1
Chloroform	1.93	80	1.3	<2.0	<1.0	<1.0	<1.0	0.17	1.9
Chloromethane	17.8	67	<10	<4.0	<2.0	0.11	<2.0	<2.0	<14
1,1-Dichloroethene	340	190	1.5	<2.0	<1.0	<1.0	<1.0	<1.0	2.1
Ethylbenzene	14.8	700	<5.0	<2.0	<1.0	<1.0	<1.0	<1.0	<7.1
Methylene chloride	48	580	0.98B	0.27B	<1.0	<1.0	0.10B	<1.0	1.1B
Tetrachloroethene	1.08	11	<5.0	<2.0	<1.0	<1.0	<1.0	<1.0	<7.1
Toluene	2280	1500	<5.0	<2.0	<1.0	<1.0	<1.0	<1.0	<7.1
1,1,1-Trichloroethane	9130	3100	<5.0	<2.0	<1.0	<1.0	<1.0	<1.0	<7.1
Trichloroethene	16.5	2.5	**230**	**66**	0.63	**27**	<1.0	0.32	**280**
2-butanone (MEK)	7060	440000	<25	<10	<5.0	<5.0	<5.0	<5.0	<36

Notes:

Data quality flag (J) removed and results treated as detects for screening.

[1] NMED Tapwater Screening Levels: NEW MEXICO ENVIRONMENT DEPARTMENT Hazardous Waste Bureau and Ground Water Quality Bureau Voluntary Remediation Program, Table A-1, TECHNICAL BACKGROUND DOCUMENT FOR DEVELOPMENT OF SOIL SCREENING LEVELS, REVISION 5.0, July 2009. Underline indicates EPA MCL.

[2] VI - EPA OSWER Draft Guidance for Evaluating the Vapor Intrusion to Indoor Air Pathway from Groundwater and Soils (Subsurface Vapor Intrusion Guidance) Table 2b November 2002

Bold results exceed the New Mexico Tapwater Screening Level.

Highlighted result exceedes the Vapor Intrusion 1E-5 Risk Screening Level.

µg/L - micrograms per liter
n/a - not applicable
< - Indicates compound not detected at or above the Reporting Limit
B - Method blank contamination, the associated method blank contains the target analyte at a reportable level
J - Estimated result, result is less than the Reporting Limit

Table 3-12
Screening 1998 Groundwater Analytical Results for
Direct Contact and Vapor Intrusion Risk
SS-39 (SWMUs 165, 177, 179, and 181) Missile Fuel Spill Area
Holloman AFB, New Mexico

Analytes	NMED Tapwater[1]	Vapor Intrusion[2]	SS39-08	SS39-09	SS39-10	SS39-11	SS39-12	SS39-13	SS39-14
			8'	18'	17'	8'	3'	11'	5'
EPA SW-846 Method 8260A - Volatile Organic Compounds (µg/L)									
Acetone	21800	220000	<36	5.9	5.1	<10	<10	<50	<17
Benzene	7300	n/a	<3.6	1	0.42	<1.0	<1.0	<5.0	<1.7
Carbon disulfide	1040	560	<3.6	0.22	<1.0	0.37	<1.0	<5.0	<1.7
Carbon tetrachloride	1.99	5	**2.1**	<1.0	<1.0	<1.0	<1.0	0.86	<1.7
Chloroform	1.93	80	1.4	<1.0	0.29	<1.0	<1.0	1.3	0.22
Chloromethane	17.8	67	<7.1	<2.0	<2.0	<2.0	<2.0	<1.0	<3.3
1,1-Dichloroethene	340	190	1.3	<1.0	<1.0	<1.0	<1.0	1.2	<1.7
Ethylbenzene	14.8	700	<3.6	0.15	0.12	<1.0	<1.0	<5.0	<1.7
Methylene chloride	48	580	0.53B	0.19B	<1.0	<1.0	<1.0	<5.0	<1.7
Tetrachloroethene	1.08	11	<3.6	<1.0	0.14	<1.0	<1.0	<5.0	<1.7
Toluene	2280	1500	<3.6	0.79	0.5	<1.0	<1.0	<5.0	<1.7
1,1,1-Trichloroethane	9130	3100	<3.6	<1.0	0.18	<1.0	<1.0	<5.0	<1.7
Trichloroethene	16.5	2.5	**130**	0.18	0.29	<1.0	1.1	**210**	**70**
2-butanone (MEK)	7060	440000	<18	3.8	<5.0	1.2	<5.0	<25	<8.3

Notes:

Data quality flag (J) removed and results treated as detects for screening.

[1] NMED Tapwater Screening Levels: NEW MEXICO ENVIRONMENT DEPARTMENT Hazardous Waste Bureau and Ground Water Quality Bureau Voluntary Remediation Program, Table A-1, TECHNICAL BACKGROUND DOCUMENT FOR DEVELOPMENT OF SOIL SCREENING LEVELS, REVISION 5.0, July 2009. Underline indicates EPA MCL.

[2] VI - EPA OSWER Draft Guidance for Evaluating the Vapor Intrusion to Indoor Air Pathway from Groundwater and Soils (Subsurface Vapor Intrusion Guidance) Table 2b November 2002

Bold results exceed the New Mexico Tapwater Screening Level.

Highlighted result exceedes the Vapor Intrusion 1E-5 Risk Screening Level.

µg/L - micrograms per liter
n/a - not applicable
< - Indicates compound not detected at or above the Reporting Limit
B - Method blank contamination, the associated method blank contains the target analyte at a reportable level
J - Estimated result, result is less than the Reporting Limit

Table 3-12
Screening 1998 Groundwater Analytical Results for
Direct Contact and Vapor Intrusion Risk
SS-39 (SWMUs 165, 177, 179, and 181) Missile Fuel Spill Area
Holloman AFB, New Mexico

Analytes	NMED Tapwater[1]	Vapor Intrusion[2]	SS39-15	SS39-16
EPA SW-846 Method 8260A - Volatile Organic Compounds (µg/L)				
Acetone	21800	220000	<10	<10
Benzene	7300	n/a	<1.0	<1.0
Carbon disulfide	1040	560	<1.0	<1.0
Carbon tetrachloride	1.99	5	<1.0	<1.0
Chloroform	1.93	80	<1.0	<1.0
Chloromethane	17.8	67	<2.0	<2.0
1,1-Dichloroethene	340	190	<1.0	<1.0
Ethylbenzene	14.8	700	<1.0	<1.0
Methylene chloride	48	580	<1.0	<1.0
Tetrachloroethene	1.08	11	<1.0	<1.0
Toluene	2280	1500	<1.0	<1.0
1,1,1-Trichloroethane	9130	3100	<1.0	<1.0
Trichloroethene	16.5	2.5	<1.0	<1.0
2-butanone (MEK)	7060	440000	<5.0	<5.0

Notes:
Data quality flag (J) removed and results treated as detects for screening.
[1] NMED Tapwater Screening Levels: NEW MEXICO ENVIRONMENT DEPARTMENT Hazardous Waste Bureau and Ground Water Quality Bureau Voluntary Remediation Program, Table A-1, TECHNICAL BACKGROUND DOCUMENT FOR DEVELOPMENT OF SOIL SCREENING LEVELS, REVISION 5.0, July 2009. Underline indicates EPA MCL.
[2] VI - EPA OSWER Draft Guidance for Evaluating the Vapor Intrusion to Indoor Air Pathway from Groundwater and Soils (Subsurface Vapor Intrusion Guidance) Table 2b November 2002
Bold results exceed the New Mexico Tapwater Screening Level.
Highlighted result exceedes the Vapor Intrusion 1E-5 Risk Screening Level.
µg/L - micrograms per liter
n/a - not applicable
< - Indicates compound not detected at or above the Reporting Limit
B - Method blank contamination, the associated method blank contains the target analyte at a reportable level
J - Estimated result, result is less than the Reporting Limit

Table 3-13
Screening Groundwater Compliance Long Term Monitoring Analytical Results (1997-2006) for
Direct Contact and Vapor Intrusion Risk
SS-39 (SWMUs 165, 177, 179, and 181) – Missile Fuel Spill Area
Holloman AFB, New Mexico

Analysis	NMED Tapwater[1]	Vapor Intrusion[2]	MW-39-01 (upgradient)					MW-39-02				
			Sep-97	Sep-99	Sep-01	Apr-03	Feb-06	Sep-97	Sep-99	Sep-01	Apr-03	Dec-05
Volatile Organic Compounds (µg/L)												
Acetone	21800	220000	--	< 5	< 5	< 10	--	--	< 5	< 5	< 10	--
Carbon disulfide	1040	560	--	< 3	< 5	< 1	--	--	< 3	< 5	< 1	--
Carbon tetrachloride	1.99	5	--	< 3	< 5	< 1	--	**8.3**	**4**	**3.1**	**2.2**	--
Chloroform	1.93	80	1.1	< 3	< 5	< 1	--	**3.8**	**2**	1.9	0.8	1.6
1,1-Dichloroethene	340	190	--	< 3	< 5	< 1	--	--	1	< 5	< 1	--
Methyl ethyl ketone	7060	440000	--	< 5	< 5	NA	--	--	< 5	< 5	NA	--
Trichloroethene	16.5	2.5	--	< 3	< 5	< 1	--	**38**	**45**	**39**	3.4	0.79
Total Dissolved Solids (mg/L)	10,000	n/a	NA	NA	NA	NA	5,670	NA	NA	NA	NA	**17,200**

NOTES:

Data quality flag (J) removed and results treated as detects for screening.

[1] NMED Tapwater Screening Levels: NEW MEXICO ENVIRONMENT DEPARTMENT Hazardous Waste Bureau and Ground Water Quality Bureau Voluntary Remediation Program, Table A-1, TECHNICAL BACKGROUND DOCUMENT FOR DEVELOPMENT OF SOIL SCREENING LEVELS, REVISION 5.0, July 2009. Underline indicates EPA MCL.

[2] VI - EPA OSWER Draft Guidance for Evaluating the Vapor Intrusion to Indoor Air Pathway from Groundwater and Soils (Subsurface Vapor Intrusion Guidance) Table 2b November 2002

Bold results exceed the New Mexico Tapwater Screening Level.

Highlighted result exceedes the Vapor Intrusion 1E-5 Risk Screening Level.

µg/L - micrograms per liter

mg/L - milligrams per liter

NA - not analyzed

-- no detected; not applicable

< - Analyte not detected at the reported detection limit

J - Estimated value < CRDL but greater than the reporting limit.

U - Compound not detected, result was < CRDL.

UJ - Estimated as a non-detect at the detection limit.

CRDL - Contract-Required Detection Limit

Table 3-13
Screening Groundwater Compliance Long Term Monitoring Analytical Results (1997-2006) for
Direct Contact and Vapor Intrusion Risk
SS-39 (SWMUs 165, 177, 179, and 181) – Missile Fuel Spill Area
Holloman AFB, New Mexico

Analysis	NMED Tapwater[1]	Vapor Intrusion[2]	MW-39-03					MW-39-04				
			Sep-97	Sep-99	Sep-01	Apr-03	Dec-05	Sep-97	Sep-99	Sep-01	Apr-03	Feb-06
Volatile Organic Compounds (µg/L)												
Acetone	21800	220000	--	< 5	< 5	< 10	--	--	< 5	57	< 10	--
Carbon disulfide	1040	560	14	< 3	< 5	< 1	--	--	< 3	< 5	< 1	--
Carbon tetrachloride	1.99	5	--	< 3	< 5	< 1	**5**	--	< 3	< 5	< 1	--
Chloroform	1.93	80	--	1	1.1	1.1	1.9	--	< 3	< 5	< 1	--
1,1-Dichloroethene	340	190	--	< 3	< 5	< 1	--	--	< 3	< 5	< 1	--
Methyl ethyl ketone	7060	440000	--	< 5	< 5	NA	--	--	< 5	17	NA	--
Trichloroethene	16.5	2.5	--	1	< 5	0.71	5.2	--	ND	< 5	< 1	--
Total Dissolved Solids (mg/L)	10,000	n/a	NA	NA	NA	NA	**10,400**	NA	NA	NA	NA	**14,100**

NOTES:

Data quality flag (J) removed and results treated as detects for screening.

[1] NMED Tapwater Screening Levels: NEW MEXICO ENVIRONMENT DEPARTMENT Hazardous Waste Bureau and Ground Water Quality Bureau Voluntary Remediation Program, Table A-1, TECHNICAL BACKGROUND DOCUMENT FOR DEVELOPMENT OF SOIL SCREENING LEVELS, REVISION 5.0, July 2009. Underline indicates EPA MCL.

[2] VI - EPA OSWER Draft Guidance for Evaluating the Vapor Intrusion to Indoor Air Pathway from Groundwater and Soils (Subsurface Vapor Intrusion Guidance) Table 2b November 2002

Bold results exceed the New Mexico Tapwater Screening Level.

Highlighted result exceedes the Vapor Intrusion 1E-5 Risk Screening Level.

µg/L - micrograms per liter

mg/L - milligrams per liter

NA - not analyzed

-- no detected; not applicable

< - Analyte not detected at the reported detection limit

J - Estimated value < CRDL but greater than the reporting limit.

U - Compound not detected, result was < CRDL.

UJ - Estimated as a non-detect at the detection limit.

CRDL - Contract-Required Detection Limit

Table 3-14
Screening of Chemicals Detected in Historical Long Term Monitoring Results (2006-2008) for
Direct Contact and Vapor Intrusion Risk
SS-39 (SWMU 165, 177, 179 and 181)
Holloman AFB, New Mexico

ANALYTE	NMED Tapwater (µg/L)(1)	Vapor Intrusion (µg/L)(2)	MW-39-02								MW-39-05							
			15-Jul-2006		17-Jan-2007		19-Jul-2007		17-Jan-2008		13-Jul-2006		18-Jan-2007		19-Jul-2007		17-Jan-2008	
			Val	Q	Val	Q	Val	Q	Val	Q	Val	Q	Val	Q	Val	Q	Val	Q
Volatile Organic Compounds (µg/L)																		
1,1-Dichloroethane	24.2	2200	0.0299	U	1	U	1	U	1	U	0.0299	U	1	U	1	U	1	U
1,1-Dichloroethene	340	190	0.0736	U	0.54	J	1	U	1	U	0.0736	U	1	U	1	U	1	U
2-Butanone	7060	440000	0.394	U	5	U	5	U	5	U	0.394	U	5	U	5	U	5	U
4-Bromofluorobenzene	n/a	n/a	NA		48		NA		NA		NA		44.8		NA		NA	
Acetone	21800	220000	0.854	U	10	UJ	5	UJ	5	U	0.854	U	10	UJ	5	UJ	5	U
Benzene	4.13	14	0.0495	U	1	U	1	U	1	U	0.07	J	1	U	1	U	1	U
Bromodichloromethane	1.17	21	0.0651	U	1	U	1	U	1	U	0.0651	U	1	U	1	U	1	U
Bromoform	85.1	0.083	0.0859	U	1	U	1	U	1	U	0.0859	U	1	U	1	U	1	U
Carbon tetrachloride	1.99	5	**3.13**		**3.08**		**2.2**		**2.2**		0.121	U	1	U	1	U	1	U
Chlorobenzene	91.3	390	0.0217	U	1	U	1	U	1	U	0.03	J	1	U	1	U	1	U
Chloroform	1.93	80	1.38		1.44		1.5		1.1		0.0475	U	1	U	1	U	1	U
Chloromethane	17.8	67	0.23	U	1	U	1	U	1	U	0.23	U	1	U	1	U	1	U
cis-1,2-Dichloroethene	365	210	0.101	U	1	U	1	U	1	U	0.101	U	1	U	1	U	1	U
Dibromofluoromethane	n/a	n/a	NA		52.4		NA		NA		NA		53.5		NA		NA	
m,p-Xylene	--	22000	0.04	J	1	U	2	U	2	U	1	U	1	U	2	U	2	U
Methylene chloride	48	580	0.689	U	5	U	1.3	U	1.3	U	0.689	U	5	U	1.3	U	1.3	U
Tetrachloroethene	1.08	11																
Trichloroethene	16.5	5	13.3		**19.8**		**29**		**17**		**25**		**20.4**		**26**		**17**	
Perchlorate(µg/L)																		
Perchlorate	26	--	12		75	U	10		11		**29**		600	U	**31**		24	
Total Metals(µg/L)																		
Arsenic	0.448	--	NA		5	U	100	U	50	U	NA		5	U	200	U	50	U
Barium	7300	--	NA		14		110	U	55	U	NA		19		220	U	30	J
Cadmium	18.3	--	NA		1	U	22	U	11	U	NA		1	U	44	U	11	U
Chromium	100	--	NA		14		100	U	50	U	NA		5	U	200	U	50	U
Lead	15	--	NA		5	U	66	U	33	U	NA		5	U	130	U	33	U
Selenium	183	--	NA		10	U	150	U	75	U	NA		10	U	300	U	38	J
Silver	183	--	NA		2	U	50	U	25	U	NA		2	U	32	J	25	U
Filtered Metals(µg/L)																		
Arsenic	0.448	--	R		5	U	100	U	50	U	R		5	U	200	U	50	U
Barium	7300	--	R		14	J	110	UJ	55	U	R		15	J	220	UJ	23	J
Cadmium	18.3	--	R		1	UJ	22	U	11	U	R		1	UJ	44	U	11	U
Chromium	100	--	R		7	J	100	U	50	U	R		5	UJ	200	U	50	U
Lead	15	--	R								R							
Selenium	183	--	R		10	UJ	150	U	75	U	R		10	UJ	300	U	35	J
Silver	183	--	R		2	UJ	50	U	25	U	R		2	UJ	21	J	25	U
OtherCompounds(mg/L)																		
TDS (residue, Filterable)	10,000	--	**16,300**		**15,700**		**19,000**		**15,000**		**69,400**		**83,900**		**77,000**		**64,000**	

Table 3-14
Screening of Chemicals Detected in Historical Long Term Monitoring Results (2006-2008) for
Direct Contact and Vapor Intrusion Risk
SS-39 (SWMU 165, 177, 179 and 181)
Holloman AFB, New Mexico

ANALYTE	NMED Tapwater (µg/L)(1)	Vapor Intrusion (µg/L)(2)	MW-39-06												MW-39-06D									
			13-Jul-2006		17-Jan-2007				17-Jul-2007				15-Jan-2008		13-Jul-2006		18-Jan-2007		17-Jul-2007		15-Jan-2008			
			Val	Q	Val	Q	Val(3)	Q(3)	Val	Q	Val(3)	Q(3)	Val	Q	Val	Q	Val	Q	Val	Q	Val	Q	Val(3)	Q(3)
Volatile Organic Compounds (µg/L)																								
1,1-Dichloroethane	24.2	2200	0.03	J	1	U	1	U	1	U	1	U	1	U	0.0299	U	1	U	1	U	1	U	1	U
1,1-Dichloroethene	340	190	2.02		1.83		1.88		1.9		1.5		1.2		0.24	J	1.42		1.5		1	U	1	U
2-Butanone	7060	440000	0.394	U	5	U	5	U	5	U	5	U	5	U	0.394	U	5	U	5	U	5	U	5	U
4-Bromofluorobenzene	n/a	n/a	NA		47.2		47.3		NA		NA		NA		NA		43.4		NA		NA		NA	
Acetone	21800	220000	0.854	U	10	UJ	10	UJ	5	UJ	5	UJ	5	U	1.88	J	10	UJ	5	UJ	5	U	5	U
Benzene	4.13	14	0.09	J	1	U	1	U	1	U	1	U	1	U	0.09	J	1	U	1	U	1	U	1	U
Bromodichloromethane	1.17	21	0.14	J	1	U	1	U	1	U	1	U	1	U	0.0651	U	1	U	1	U	1	U	1	U
Bromoform	85.1	0.083	0.0859	U	1	U	1	U	1	U	1	U	1	U	0.0859	U	1	U	1	U	1	U	1	U
Carbon tetrachloride	1.99	5	1.51		1.93		1.88		**2.3**		1	U	**2.4**		0.121	U	1	U	1	U	1	U	1	U
Chlorobenzene	91.3	390	0.0217	U	1	U	1	U	1	U	1	U	1	U	0.04	J	1	U	1	U	1	U	1	U
Chloroform	1.93	80	**2.85**		**2.52**		**2.52**	J	**2.2**		1	U	**2.2**		0.27	J	0.65	J	1	U	1	U	1	U
Chloromethane	17.8	67	0.37	J	1	U	1	U	1	U	1	U	1	U	0.23	U	0.51	J	1	U	1	U	1	U
cis-1,2-Dichloroethene	365	210	0.12	J	1	U	1	U	1	U	1	U	1	U	0.101	U	1	U	1	U	1	U	1	U
Dibromofluoromethane	n/a	n/a	NA		51.9		51.6		NA		NA		NA		NA		51.7		NA		NA		NA	
m,p-Xylene	--	22000	1	U	1	U	1	U	2	U	2	U	2	U	1	U	1	U	2	U	2	U	2	U
Methylene chloride	48	580	0.689	U	5	U	5	U	1.3	U	1.3	U	1.3	U	0.689	U	5	U	1.3	U	1.3	U	1.3	U
Tetrachloroethene	1.08	11																						
Trichloroethene	16.5	5	**366**	J	**219**		**219**	J	**220**		**440**		**120**		**113**		**464**	J	**470**		**75**	J	**92**	J
Perchlorate(µg/L)																								
Perchlorate	26	--	**37**		300	U	300	U	**36**		**38**		**27**		**35**		600	U	**34**		**32**		**27**	
Total Metals(µg/L)																								
Arsenic	0.448	--	NA		5	U	5	U	50	U	**43**	J	50	U	NA		**17**		**65**	J	50	U	**14**	J
Barium	7300	--	NA		37		26	J	22	J	110	U	55	U	NA		17	J	110	U	31	J	31	J
Cadmium	18.3	--	NA		1	U	1	U	11	U	22	U	11	U	NA		1	U	12	J	11	U	11	U
Chromium	100	--	NA		5	U	5	U	50	U	100	U	50	U	NA		5	U	100	U	50	U	50	U
Lead	15	--	NA		5	U	5	U	33	UJ	66	UJ	33	U	NA		5	U	66	UJ	33	U	33	U
Selenium	183	--	NA		10	U	10	U	28	J	52	U	32	U	NA		10	U	82	J	67	J	68	J
Silver	183	--	NA		2	U	2	U	25	U	50	U	25	U	NA		2	U	14	J	25	U	25	U
Filtered Metals(µg/L)																								
Arsenic	0.448	--	R		5	U	5	U	**31**	J	100	U	50	U	R		5	U	100	U	50	U	**18**	J
Barium	7300	--	R		12	J	12	J	110	U	110	U	55	U	R		17	J	110	U	30	J	30	J
Cadmium	18.3	--	R		1	UJ	1	UJ	22	U	22	U	11	U	R		1	UJ	22	U	11	U	11	U
Chromium	100	--	R		5	UJ	5	UJ	100	U	100	U	50	U	R		5	UJ	100	U	50	U	50	U
Lead	15	--	R												R									
Selenium	183	--	R		10	UJ	10	UJ	150	U	57	J	32	J	R		10	UJ	79	J	65	J	62	J
Silver	183	--	R		2	UJ	2	UJ	50	U	14	J	25	U	R		2	UJ	50	U	25	U	25	U
OtherCompounds(mg/L)																								
TDS (residue, Filterable)	10,000	--	**32,500**		**35,500**		NA		**33,000**	J	**2,300,000**	J	**30,000**		**119,000**		**110,000**		**98,000**	J	**120,000**		**110,000**	

Table 3-14
Screening of Chemicals Detected in Historical Long Term Monitoring Results (2006-2008) for
Direct Contact and Vapor Intrusion Risk
SS-39 (SWMU 165, 177, 179 and 181)
Holloman AFB, New Mexico

ANALYTE	NMED Tapwater (µg/L)[1]	Vapor Intrusion (µg/L)[2]	MW-39-07										MW-39-08							
			12-Jul-2006		14-Jul-2006		18-Jan-2007		19-Jul-2007		17-Jan-2008		14-Jul-2006		18-Jan-2007		18-Jul-2007		16-Jan-2008	
			Val	Q	Val	Q	Val	Q	Val	Q	Val	Q	Val	Q	Val	Q	Val	Q	Val	Q
Volatile Organic Compounds (µg/L)																				
1,1-Dichloroethane	24.2	2200	0.0299	U	NA		1	U	1	U	1	U	0.0299	U	1	U	1	U	1	U
1,1-Dichloroethene	340	190	0.0736	U	NA		1	U	1	U	1	U	0.0736	U	1	U	1	U	1	U
2-Butanone	7060	440000	0.394	U	NA		5	U	5	U	5	U	0.394	U	5	U	5	U	5	UJ
4-Bromofluorobenzene	n/a	n/a	NA		NA		45.5		NA		NA		NA		43.8		NA		NA	
Acetone	21800	220000	0.854	U	NA		10	UJ	5	UJ	5	U	0.854	U	10	UJ	5	UJ	5	U
Benzene	4.13	14	0.0495	U	NA		1	U	1	U	1	U	1	U	1	U	1	U	1	U
Bromodichloromethane	1.17	21	0.0651	U	NA		1	U	1	U	1	U	0.0651	U	1	U	1	U	1	U
Bromoform	85.1	0.083	0.0859	U	NA		1	U	1	U	1	U	0.0859	U	1	U	1	U	1	U
Carbon tetrachloride	1.99	5	0.121	U	NA		1	U	1	U	1	U	0.121	U	1	U	1	U	1	UJ
Chlorobenzene	91.3	390	1	U	NA		1	U	1	U	1	U	1	U	1	U	1	U	1	U
Chloroform	1.93	80	0.11	J	NA		1	U	1	U	1	U	0.23	J	1	U	1	U	1	U
Chloromethane	17.8	67	0.23	U	NA		1	U	1	U	1	U	0.23	U	1	U	1	U	1	U
cis-1,2-Dichloroethene	365	210	0.101	U	NA		1	U	1	U	1	U	0.101	U	1	U	1	U	1	U
Dibromofluoromethane	n/a	n/a	NA		NA		51.7		NA		NA		NA		52.8		NA		NA	
m,p-Xylene	--	22000	1	U	NA		1	U	2	U	2	U	1	U	1	U	2	U	2	U
Methylene chloride	48	580	0.689	U	NA		5	U	1.3	U	1.3	U	0.689	U	5	U	1.3	U	1.3	U
Tetrachloroethene	1.08	11																		
Trichloroethene	16.5	5	0.37	J	NA		1.55		1	U	1	U	**49.6**		**38.9**		**30**		**26**	
Perchlorate(µg/L)																				
Perchlorate	26	--	**100**		NA		300	U	**91**		**74**		**59**		600	U	**99**		**84**	
Total Metals(µg/L)																				
Arsenic	0.448	--	5	U	NA		5	U	200	U	**21**	J	NA		5	U	200	U	50	U
Barium	7300	--	19		NA		44		220	U	55	U	NA		60		220	U	25	J
Cadmium	18.3	--	0.4	UJ	NA		1	U	44	U	11	U	NA		1	U	44	U	11	U
Chromium	100	--	1.4	U	NA		5	U	200	U	50	U	NA		5	U	200	U	50	U
Lead	15	--	1.6	UJ	NA		5	U	130	U	33	U	NA		5	U	130	U	33	U
Selenium	183	--	1.6	U	NA		10	U	97	J	75	U	NA		10	U	300	U	65	J
Silver	183	--	0.2	U	NA		2	U	100	U	25	U	NA		2	U	100	U	25	U
Filtered Metals(µg/L)																				
Arsenic	0.448	--	R		**20**		5	U	200	U	**15**	J	R		5	U	200	U	50	U
Barium	7300	--	R		1.4	U	9	J	220	UJ	55	U	R		11	J	220	UJ	25	J
Cadmium	18.3	--	R		0.5	U	1	UJ	44	U	11	U	R		1	UJ	44	U	11	U
Chromium	100	--	R		0.2	U	5	UJ	200	U	50	U	R		5	UJ	200	U	50	U
Lead	15	--	R										R							
Selenium	183	--	R		21		10	UJ	300	U	75	U	R		10	UJ	300	U	65	J
Silver	183	--	R		7		2	UJ	100	U	25	U	R		2	UJ	100	U	25	U
OtherCompounds(mg/L)																				
TDS (residue, Filterable)	10,000	--	**57,300**		NA		**66,200**		**60,000**		**45,000**		**102,000**		**105,000**		**110,000**		**97,000**	

Table 3-14
Screening of Chemicals Detected in Historical Long Term Monitoring Results (2006-2008) for
Direct Contact and Vapor Intrusion Risk
SS-39 (SWMU 165, 177, 179 and 181)
Holloman AFB, New Mexico

ANALYTE	NMED Tapwater (µg/L)(1)	Vapor Intrusion (µg/L)(2)	MW-39-09										MW-39-10							
			14-Jul-2006				18-Jan-2007		18-Jul-2007		16-Jan-2008		14-Jul-2006		18-Jan-2007		18-Jul-2007		16-Jan-2008	
			Val	Q	Val(3)	Q(3)	Val	Q	Val	Q	Val	Q	Val	Q	Val	Q	Val	Q	Val	Q
Volatile Organic Compounds (µg/L)																				
1,1-Dichloroethane	24.2	2200	0.0299	U	0.0299	U	1	UJ	1	U	1	U	0.0299	U	1	U	1	U	1	U
1,1-Dichloroethene	340	190	0.0736	U	0.0736	U	1	UJ	1	U	1	U	0.0736	U	1	U	1	U	1	U
2-Butanone	7060	440000	0.394	U	0.394	U	5	UJ	5	U	5.4	J	0.394	U	5	U	5	U	5	UJ
4-Bromofluorobenzene	n/a	n/a	NA		NA		42.8	J	NA		NA		NA		43.4		NA		NA	
Acetone	21800	220000	10	U	10	U	10	UJ	5	UJ	5.3	J	10	U	10	UJ	5	UJ	5	U
Benzene	4.13	14	1	U	1	U	1	UJ	1	U	1	U	0.0495	U	1	U	1	U	1	U
Bromodichloromethane	1.17	21	0.0651	U	0.0651	U	1	UJ	1	U	1	U	0.0651	U	1	U	1	U	1	U
Bromoform	85.1	0.083	0.16	J	0.0859	U	1	UJ	1	U	1	U	0.0859	U	1	U	1	U	1	U
Carbon tetrachloride	1.99	5	0.121	U	0.121	U	1	UJ	1	U	1	UJ	0.121	U	1	U	1	U	1	UJ
Chlorobenzene	91.3	390	1	U	1	U	1	UJ	1	U	1	U	1	U	1	U	1	U	1	U
Chloroform	1.93	80	0.0475	U	0.0475	U	1	UJ	1	U	1	U	0.0475	U	1	U	1	U	1	U
Chloromethane	17.8	67	0.37	J	0.37	J	0.59	J	1	U	1	U	0.34	J	1	U	1	U	1	U
cis-1,2-Dichloroethene	365	210	0.101	U	0.101	U	1	UJ	1	U	1	U	0.101	U	1	U	1	U	1	U
Dibromofluoromethane	n/a	n/a	NA		NA		52.1	J	NA		NA		NA		52.4		NA		NA	
m,p-Xylene	--	22000	1	U	1	U	1	UJ	2	U	2	U	1	U	1	U	2	U	2	U
Methylene chloride	48	580	0.689	U	0.689	U	0.58	J	1.3	U	1.3	U	0.689	U	5	U	1.3	U	1.3	U
Tetrachloroethene	1.08	11																		
Trichloroethene	16.5	5	0.0495	U	0.06	J	1	UJ	1	U	1	U	0.0495	U	1	U	1	U	1	U
Perchlorate(µg/L)																				
Perchlorate	26	--	**110**		**130**		600	U	**160**		**180**		**130**		600	U	**86**		**220**	
Total Metals(µg/L)																				
Arsenic	0.448	--	NA		NA		5	U	200	U	50	U	NA		5	U	200	U	50	U
Barium	7300	--	NA		NA		277		220	U	19	J	NA		11		220	U	26	J
Cadmium	18.3	--	NA		NA		1	U	44	U	11	U	NA		1	U	44	U	11	U
Chromium	100	--	NA		NA		5	U	200	U	50	U	NA		5	U	200	U	50	U
Lead	15	--	NA		NA		**38**		130	U	33	U	NA		5	U	130	U	33	U
Selenium	183	--	NA		NA		10	U	300	U	55	J	NA		10	U	300	U	35	J
Silver	183	--	NA		NA		2	U	100	U	25	U	NA		2	U	100	U	25	U
Filtered Metals(µg/L)																				
Arsenic	0.448	--	R		R		5	U	200	U	50	U	R		5	U	200	U	50	U
Barium	7300	--	R		R		6	J	220	UJ	55	U	R		9	J	220	UJ	55	U
Cadmium	18.3	--	R		R		1	UJ	44	U	11	U	R		1	UJ	44	U	11	U
Chromium	100	--	R		R		5	UJ	200	U	50	U	R		5	UJ	200	U	50	U
Lead	15	--	R		R								R							
Selenium	183	--	R		R		10	UJ	300	U	55	J	R		10	UJ	300	U	33	J
Silver	183	--	R		R		2	UJ	100	U	25	U	R		2	UJ	100	U	25	J
OtherCompounds(mg/L)																				
TDS (residue, Filterable)	10,000	--	**107,000**		**110,000**		**131,000**		**140,000**		**110,000**		**106,000**		**112,000**		**130,000**		**110,000**	

Table 3-14
Screening of Chemicals Detected in Historical Long Term Monitoring Results (2006-2008) for
Direct Contact and Vapor Intrusion Risk
SS-39 (SWMU 165, 177, 179 and 181)
Holloman AFB, New Mexico

ANALYTE	NMED Tapwater (µg/L)[1]	Vapor Intrusion (µg/L)[2]	MW-39-11										MW-39-12									
			13-Jul-2006		14-Jul-2006		18-Jan-2007		18-Jul-2007		17-Jan-2008		13-Jul-2006		14-Jul-2006		18-Jan-2007		18-Jul-2007		17-Jan-2008	
			Val	Q	Val	Q	Val	Q	Val	Q	Val	Q	Val	Q	Val	Q	Val	Q	Val	Q	Val	Q
Volatile Organic Compounds (µg/L)																						
1,1-Dichloroethane	24.2	2200	0.0299	U	NA		1	U	1	U	1	U	0.0299	U	NA		1	U	1	U	1	U
1,1-Dichloroethene	340	190	0.0736	U	NA		1	U	1	U	1	U	0.0736	U	NA		1	U	1	U	1	U
2-Butanone	7060	440000	0.394	U	NA		5	U	5	U	5	U	0.394	U	NA		5	U	5	U	5	U
4-Bromofluorobenzene	n/a	n/a	NA		NA		42.9		NA		NA		NA		NA		42.3		NA		NA	
Acetone	21800	220000	3.12	J	NA		10	UJ	5	UJ	5	U	0.854	U	NA		10	UJ	5	UJ	5	U
Benzene	4.13	14	0.06	J	NA		1	U	1	U	1	U	0.0495	U	NA		1	U	1	U	1	U
Bromodichloromethane	1.17	21	0.0651	U	NA		1	U	1	U	1	U	0.0651	U	NA		1	U	1	U	1	U
Bromoform	85.1	0.083	0.0859	U	NA		1	U	1	U	1	U	0.0859	U	NA		1	U	1	U	1	U
Carbon tetrachloride	1.99	5	0.121	U	NA		1	U	1	U	1	U	0.121	U	NA		1	U	1	U	1	U
Chlorobenzene	91.3	390	0.03	J	NA		1	U	1	U	1	U	0.0217	U	NA		1	U	1	U	1	U
Chloroform	1.93	80	0.0475	U	NA		1	U	1	U	1	U	0.0475	U	NA		1	U	1	U	1	U
Chloromethane	17.8	67	0.36	J	NA		0.43	J	1	U	1	U	0.28	J	NA		0.42	J	1	U	1	U
cis-1,2-Dichloroethene	365	210	0.25	J	NA		1	U	1	U	1	U	0.101	U	NA		1	U	1	U	1	U
Dibromofluoromethane	n/a	n/a	NA		NA		52.2		NA		NA		NA		NA		53.8		NA		NA	
m,p-Xylene	--	22000	1	U	NA		1	U	2	U	2	U	1	U	NA		1	U	2	U	2	U
Methylene chloride	48	580	0.689	U	NA		5	U	1.3	U	1.3	U	0.689	U	NA		5	U	1.3	U	1.3	U
Tetrachloroethene	1.08	11																				
Trichloroethene	16.5	5	**44.1**		NA		**31.3**		**25**		1	U	2.6		NA		2.01		1.6		12	
Perchlorate(µg/L)																						
Perchlorate	26	--	**130**		NA		750	U	**120**		**100**		**110**		NA		750	U	**230**		**80**	
Total Metals(µg/L)																						
Arsenic	0.448	--	NA		NA		5	U	250	U	**20**	J	NA		NA		5	U	250	U	50	U
Barium	7300	--	NA		NA		11		280	U	160		NA		NA		143		280	U	39	J
Cadmium	18.3	--	NA		NA		1	U	55	U	11	U	NA		NA		1	U	55	U	11	U
Chromium	100	--	NA		NA		5	U	250	U	46	J	NA		NA		5	U	250	U	50	U
Lead	15	--	NA		NA		5	U	170	U	33	U	NA		NA		5	U	170	U	14	J
Selenium	183	--	NA		NA		46	U	380	U	79		NA		NA		10	U	380	U	62	J
Silver	183	--	NA		NA		2	U	130	U	25	U	NA		NA		2	U	130	U	25	U
Filtered Metals(µg/L)																						
Arsenic	0.448	--	R		**39**		5	U	250	U	**17**	J	R		R		5	U	200	U	**14**	J
Barium	7300	--	R		22		9	J	280	UJ	55	U	R		R		9	J	220	UJ	23	J
Cadmium	18.3	--	R		6		1	UJ	55	U	11	U	R		R		1	UJ	44	U	11	U
Chromium	100	--	R		2	J	5	UJ	250	U	50	U	R		R		5	UJ	200	U	50	U
Lead	15	--	R										R		R							
Selenium	183	--	R		58		10	UJ	380	U	65	J	R		R		10	UJ	300	U	51	J
Silver	183	--	R		6		2	UJ	130	U	25	U	R		R		2	UJ	100	U	25	U
OtherCompounds(mg/L)																						
TDS (residue, Filterable)	10,000	--	**124,000**		NA		**141,000**		**150,000**		**130,000**		**136,000**		NA		**140,000**		**150,000**		**120,000**	

Table 3-14
Screening of Chemicals Detected in Historical Long Term Monitoring Results (2006-2008) for Direct Contact and Vapor Intrusion Risk
SS-39 (SWMU 165, 177, 179 and 181)
Holloman AFB, New Mexico

Notes:

(1) NMED Tapwater Screening Levels: NEW MEXICO ENVIRONMENT DEPARTMENT Hazardous Waste Bureau and Ground Water Quality Bureau Voluntary Remediation Program, Table A-1, TECHNICAL BACKGROUND DOCUMENT FOR DEVELOPMENT OF SOIL SCREENING LEVELS, REVISION 5.0, July 2009. Underline indicates EPA MCL.

(2) VI - EPA OSWER Draft Guidance for Evaluating the Vapor Intrusion to Indoor Air Pathway from Groundwater and Soils (Subsurface Vapor Intrusion Guidance) Table 2b November 2002

(3) Duplicate

Bold results exceed the New Mexico Tapwater Screening Levels.

Highlighted results exceed EPA OSWER (2002) Vapor Intrusion 1E-5 Risk Screening Level for Groundwater to Indoor Air Pathway.

J = estimated result; R = Rejected Data; U = not detected.
µg/L = micrograms per liter; mg/L = milligrams per liter
NA = not analyzed; n/a = not applicable
Val = reported analytical concentration
Q = analytical result qualifier
TDS = total dissolved solids

Table 4-1. Screening of Chemicals Detected in Soil Samples (2010) for Direct Contact Risk
SS-39, Holloman Air Force Base

				Location:	SS39-DPT-01	SS39-DPT-01	SS39-DPT-01	SS39-DPT-01
				Collection Date:	11/08/2010	11/08/2010	11/08/2010	11/08/2010
				Depth Range (ft):	0 to 2	0 to 2	3 to 5	7.5 to 9.5
				QCType:	N	FD	N	N
				SampleID:	SS39-DPT-01A	SS39-DPT-DUP05	SS39-DPT-01B	SS39-DPT-01C
Test Group	Parameter	NMED[1] Res. Soil	NMED Ind. Soil	NMED Const. Soil				
Metals, Total	Arsenic	3.59	17.7	65.4		1.2		
	Barium	15600	224000	4350		42.6		
	Cadmium	77.9	1120	309		0.19 J		
	Chromium [2]	219	2920	449		3.9 U		
	Lead	400	800	800		8.3		
	Selenium	391	5680	1550		2.4 U		
	Silver	391	5680	1550		0.059 U		
				Location:	SS39-DPT-01	SS39-DPT-01	SS39-DPT-01	SS39-DPT-01
				Collection Date:	11/08/2010	11/08/2010	11/08/2010	11/08/2010
				Depth Range (ft):	0 to 2	0 to 2	3 to 5	7.5 to 9.5
				QCType:	N	FD	N	N
				SampleID:	SS39-DPT-01A	SS39-DPT-DUP05	SS39-DPT-01B	SS39-DPT-01C
Test Group	Parameter	NMED[1] Res. Soil	NMED Ind. Soil	NMED Const. Soil				
VOCs	Acetone	67500	851000	263000	0.02 R	0.019 R	0.018 R	0.021 R
	Methylene chloride	199	1090	10600	0.0079 U	0.0043 U	0.0096 U	0.0137 U
	Tetrachloroethene	6.99	36.4	338	0.001 U	0.00093 U	0.00091 U	0.001 U
	Trichloroethene	45.7	253	4600	0.0012 U	0.0011 U	0.0011 U	0.0013 U
TPH	TPH C10-C28	760	1810	n/a	4.4 U	4.4 U	4.2 U	3.9 U

Table 4-1. Screening of Chemicals Detected in Soil Samples (2010) for Direct Contact Risk
SS-39, Holloman Air Force Base

		SS39-DPT-02 11/08/2010 0 to 2 N SS39-DPT-02A	SS39-DPT-02 11/08/2010 3 to 5 N SS39-DPT-02B	SS39-DPT-02 11/08/2010 6 to 8 N SS39-DPT-02C	SS39-DPT-03 11/08/2010 0 to 2 N SS39-DPT-03A	SS39-DPT-03 11/08/2010 3 to 5 N SS39-DPT-03B	SS39-DPT-03 11/08/2010 6 to 8 N SS39-DPT-03C
Test Group	Parameter						
Metals, Total	Arsenic						
	Barium						
	Cadmium						
	Chromium [(2)]						
	Lead						
	Selenium						
	Silver						
		SS39-DPT-02 11/08/2010 0 to 2 N SS39-DPT-02A	SS39-DPT-02 11/08/2010 3 to 5 N SS39-DPT-02B	SS39-DPT-02 11/08/2010 6 to 8 N SS39-DPT-02C	SS39-DPT-03 11/08/2010 0 to 2 N SS39-DPT-03A	SS39-DPT-03 11/08/2010 3 to 5 N SS39-DPT-03B	SS39-DPT-03 11/08/2010 6 to 8 N SS39-DPT-03C
Test Group	Parameter						
VOCs	Acetone	0.017 R	0.02 R	0.018 R	0.018 R	0.017 R	0.018 R
	Methylene chloride	0.008 U	0.0102 U	0.0159 U	0.0063 U	0.0046 U	0.008 U
	Tetrachloroethene	0.00087 U	0.00099 U	0.00091 U	0.00091 U	0.00087 U	0.00092 U
	Trichloroethene	0.001 U	0.0012 U	0.0011 U	0.0011 U	0.001 U	0.0011 U
TPH	TPH C10-C28	4.3 U	4 U	4.2 U	4.5 U	4.3 U	4.3 U

Table 4-1. Screening of Chemicals Detected in Soil Samples (2010) for Direct Contact Risk
SS-39, Holloman Air Force Base

		SS39-DPT-03 11/08/2010 6 to 8 FD SS39-DPT-DUP04	SS39-DPT-04 11/08/2010 0 to 2 N SS39-DPT-04A	SS39-DPT-04 11/08/2010 3 to 5 N SS39-DPT-04B	SS39-DPT-04 11/08/2010 6 to 8 N SS39-DPT-04C	SS39-DPT-05 11/06/2010 3 to 5 N SS39-DPT-05A	SS39-DPT-05 11/06/2010 7 to 9 N SS39-DPT-05B
Test Group	Parameter						
Metals, Total	Arsenic	0.92				0.37 U	1.2
	Barium	27.1				24.6	55.3
	Cadmium	0.095 J				0.15 J	0.88
	Chromium (2)	3.2 U				1.3 J	7.3
	Lead	0.91				0.22 J	2.2 J
	Selenium	1.8 U				3.6 U	2.1 U
	Silver	0.045 U				0.045 U	0.052 U
		SS39-DPT-03 11/08/2010 6 to 8 FD SS39-DPT-DUP04	SS39-DPT-04 11/08/2010 0 to 2 N SS39-DPT-04A	SS39-DPT-04 11/08/2010 3 to 5 N SS39-DPT-04B	SS39-DPT-04 11/08/2010 6 to 8 N SS39-DPT-04C	SS39-DPT-05 11/10/2010 3 to 5 N SS39-DPT-05AV	SS39-DPT-05 11/10/2010 7 to 9 N SS39-DPT-05BV
Test Group	Parameter						
VOCs	Acetone	0.018 R	0.123 J	0.018 R	0.016 R	0.019 R	0.022 R
	Methylene chloride	0.0085 U	0.0123 U	0.0047 U	0.0063 U	0.0053 J	0.005 U
	Tetrachloroethene	0.00092 U	0.0009 U	0.00092 U	0.00082 U	0.0047	0.0011 U
	Trichloroethene	0.0011 U	0.0011 U	0.0098	0.003 J	0.0011 U	0.0013 U
TPH	TPH C10-C28	4.3 U	4.5 U	5 U	4.5 U	3.5 U	3.6 U

Table 4-1. Screening of Chemicals Detected in Soil Samples (2010) for Direct Contact Risk
SS-39, Holloman Air Force Base

		SS39-DPT-05 11/06/2010 10 to 12 N SS39-DPT-05C	SS39-DPT-06 11/06/2010 3 to 5 N SS39-DPT-06A	SS39-DPT-06 11/06/2010 7 to 9 N SS39-DPT-06B	SS39-DPT-06 11/06/2010 10 to 12 N SS39-DPT-06C	SS39-DPT-07 11/06/2010 2 to 4 N SS39-DPT-07A	SS39-DPT-07 11/06/2010 7 to 9 N SS39-DPT-07B
Test Group	Parameter						
Metals, Total	Arsenic	1.5	0.42 U	0.72	1	0.39 U	0.15 U
	Barium	55.6	22.8	49.2	35.1	28.1	22.4
	Cadmium	1	0.18	0.91	0.69	0.23	0.23
	Chromium (2)	11.1	1.4 J	8.3	7.1	2 J	2.9 J
	Lead	3.1 J	0.18 U	2.2 J	2.2 J	0.56 J	0.21 J
	Selenium	1.8 U	1.8 U	1.8 U	1.8 U	1.9 U	2 U
	Silver	0.045 U	0.046 U	0.046 U	0.045 U	0.047 U	0.05 U
		SS39-DPT-05 11/10/2010 10 to 12 N SS39-DPT-05CV	SS39-DPT-06 11/10/2010 3 to 5 N SS39-DPT-06AV	SS39-DPT-06 11/10/2010 7 to 9 N SS39-DPT-06BV	SS39-DPT-06 11/10/2010 10 to 12 N SS39-DPT-06CV	SS39-DPT-07 11/11/2010 2 to 4 N SS39-DPT-07AV	SS39-DPT-07 11/11/2010 7 to 9 N SS39-DPT-07BV
Test Group	Parameter						
VOCs	Acetone	0.015 R	0.016 R	0.015 U	0.015 U	0.017 U	0.016 U
	Methylene chloride	0.0035 U	0.0037 U	0.0036 U	0.0034 U	0.0038 U	0.0036 U
	Tetrachloroethene	0.011	0.0532	0.0078	0.0737	0.0031 J	0.00096 J
	Trichloroethene	0.00091 U	0.00097 U	0.00093 U	0.00087 U	0.001 U	0.00094 U
TPH	TPH C10-C28	3.9 U	3.4 U	3.7 U	3.8 U	3.4 U	3.5 U

Table 4-1. Screening of Chemicals Detected in Soil Samples (2010) for Direct Contact Risk
SS-39, Holloman Air Force Base

		SS39-DPT-07 11/06/2010 10 to 12 N SS39-DPT-07C	SS39-DPT-07 11/06/2010 10 to 12 FD SS39-DPT-DUP01	SS39-DPT-08 11/06/2010 2 to 4 N SS39-DPT-08A	SS39-DPT-08 11/06/2010 7 to 9 N SS39-DPT-08B	SS39-DPT-08 11/06/2010 10 to 12 N SS39-DPT-08C	SS39-DPT-09 11/06/2010 1.75 to 3.75 N SS39-DPT-09A
Test Group	Parameter						
Metals, Total	Arsenic	0.34 U	0.23 J	0.49	0.41 U	1.1	0.4 U
	Barium	24.9	26.8 J	28.2	23.1	42.7	24.6
	Cadmium	0.3	0.26	0.52	2	0.96	0.15 J
	Chromium [(2)]	3.5 J	5.4	2.4 J	6.1	9.4	1.8 J
	Lead	0.91 J	1.4	0.66 J	1.2 J	3.2	0.33 J
	Selenium	1.8 U	2.1 U	3.3 U	1.8 U	34.3	3.5 U
	Silver	0.044 U	0.052 U	0.041 U	0.045 U	0.037 U	0.044 U
		SS39-DPT-07 11/11/2010 10 to 12 N SS39-DPT-07CV	SS39-DPT-07 11/11/2010 10 to 12 FD SS39-DPT-DUP01V	SS39-DPT-08 11/11/2010 2 to 4 N SS39-DPT-08AV	SS39-DPT-08 11/11/2010 7 to 9 N SS39-DPT-08BV	SS39-DPT-08 11/11/2010 10 to 12 N SS39-DPT-08CV	SS39-DPT-09 11/11/2010 1.75 to 3.75 N SS39-DPT-09AV
Test Group	Parameter						
VOCs	Acetone	0.016 U	0.022 U	0.023 U	0.019 U	0.015 U	0.02 U
	Methylene chloride	0.0138 J	0.005 UJ	0.0054 U	0.0045 U	0.0046 J	0.0119
	Tetrachloroethene	0.0015 J	0.0011 U	0.0045 J	0.00097 U	0.0595	0.001 U
	Trichloroethene	0.00095 U	0.0013 U	0.0014 U	0.0012 U	0.00087 U	0.0012 U
TPH	TPH C10-C28	3.6 U	3.6 U	3.5 U	13.4	3.7 U	3.4 U

Table 4-1. Screening of Chemicals Detected in Soil Samples (2010) for Direct Contact Risk
SS-39, Holloman Air Force Base

		SS39-DPT-09 11/06/2010 5.75 to 7.75 N SS39-DPT-09B	SS39-DPT-09 11/06/2010 10 to 12 N SS39-DPT-09C	SS39-DPT-10 11/06/2010 1.25 to 3.25 N SS39-DPT-10A	SS39-DPT-10 11/06/2010 5.5 to 7.5 N SS39-DPT-10B	SS39-DPT-10 11/06/2010 10 to 12 N SS39-DPT-10C	SS39-DPT-10 11/06/2010 10 to 12 FD SS39-DPT-DUP02
Test Group	Parameter						
Metals, Total	Arsenic	0.76	0.59	0.36 U	0.67	1.9	1.7
	Barium	33.8	23.5	26.5	47.9	44.1	44.2 J
	Cadmium	0.32	0.38	0.41	3.1	0.66 J	0.16 J
	Chromium (2)	2.9 J	3.3 J	1.6 J	11.6	6.7	8.9 J
	Lead	0.66 J	1 J	0.54 J	3 J	2.5 J	2.9
	Selenium	1.7 U	1.5 U	2.9 U	1.6 U	1.9 U	1.9 U
	Silver	0.043 U	0.037 U	0.036 U	0.039 U	0.047 U	0.047 U
		SS39-DPT-09 11/11/2010 5.75 to 7.75 N SS39-DPT-09BV	SS39-DPT-09 11/11/2010 10 to 12 N SS39-DPT-09CV	SS39-DPT-10 11/11/2010 1.25 to 3.25 N SS39-DPT-10AV	SS39-DPT-10 11/11/2010 5.5 to 7.5 N SS39-DPT-10BV	SS39-DPT-10 11/11/2010 10 to 12 N SS39-DPT-10CV	SS39-DPT-10 11/11/2010 10 to 12 FD SS39-DPT-DUP02V
Test Group	Parameter						
VOCs	Acetone	0.015 U	0.017 U	0.019 U	0.017 U	0.018 U	0.018 U
	Methylene chloride	0.007 J	0.0073 J	0.0113	0.0094	0.0155 U	0.0084 U
	Tetrachloroethene	0.0048	0.00083 U	0.00097 U	0.008	0.0017 J	0.0014 J
	Trichloroethene	0.00087 U	0.00099 U	0.0012 U	0.001 U	0.0011 U	0.0011 U
TPH	TPH C10-C28	3.8 U	3.6 U	3.5 U	6.59	3.6 U	3.7 U

Table 4-1. Screening of Chemicals Detected in Soil Samples (2010) for Direct Contact Risk
SS-39, Holloman Air Force Base

		SS39-DPT-11 11/07/2010 1.75 to 3.75 N SS39-DPT-11A	SS39-DPT-11 11/07/2010 5.75 to 7.75 N SS39-DPT-11B	SS39-DPT-11 11/07/2010 10 to 12 N SS39-DPT-11C	SS39-DPT-12 11/07/2010 2 to 4 N SS39-DPT-12A	SS39-DPT-12 11/07/2010 5.75 to 7.75 N SS39-DPT-12B	SS39-DPT-12 11/07/2010 10 to 12 N SS39-DPT-12C
Test Group	Parameter						
Metals, Total	Arsenic	0.63	0.59	0.81	0.65	0.59	0.9
	Barium	38.2	32.7 J	72 J	36.5 J	29.5 J	84.5 J
	Cadmium	0.35	0.1 J	1.5	0.3	0.053 U	0.11 J
	Chromium [(2)]	3.2 J	2.8 J	13	2.8 J	3.3 J	9 J
	Lead	1.2 J	0.96 J	5.9	1.2	1 J	3.7 J
	Selenium	1.6 U	2 U	1.7 U	1.8 U	2.1 U	2.1 U
	Silver	0.04 U	0.051 U	0.043 U	0.046 U	0.053 U	0.053 U
		SS39-DPT-11 11/11/2010 1.75 to 3.75 N SS39-DPT-11AV	SS39-DPT-11 11/11/2010 5.75 to 7.75 N SS39-DPT-11BV	SS39-DPT-11 11/11/2010 10 to 12 N SS39-DPT-11CV	SS39-DPT-12 11/11/2010 2 to 4 N SS39-DPT-12AV	SS39-DPT-12 11/11/2010 5.75 to 7.75 N SS39-DPT-12BV	SS39-DPT-12 11/11/2010 10 to 12 N SS39-DPT-12CV
Test Group	Parameter						
VOCs	Acetone	0.015 U	0.015 U	0.017 U	0.019 U	0.021 U	0.016 UJ
	Methylene chloride	0.0075 U	0.0077 U	0.0102	0.0119 U	0.0154 U	0.0168 U
	Tetrachloroethene	0.00073 U	0.00076 U	0.00085 U	0.00096 U	0.0011 U	0.00081 U
	Trichloroethene	0.00088 U	0.00091 U	0.001 U	0.0011 U	0.0013 U	0.00097 U
TPH	TPH C10-C28	3.6 U	3.6 U	3.8 U	3.6 U	3.5 U	3.9 U

Table 4-1. Screening of Chemicals Detected in Soil Samples (2010) for Direct Contact Risk
SS-39, Holloman Air Force Base

		SS39-DPT-13 11/07/2010 2 to 4 N SS39-DPT-13A	SS39-DPT-13 11/07/2010 7 to 9 N SS39-DPT-13B	SS39-DPT-13 11/07/2010 10 to 12 N SS39-DPT-13C	SS39-DPT-14 11/07/2010 2 to 4 N SS39-DPT-14A	SS39-DPT-14 11/07/2010 5.5 to 7.5 N SS39-DPT-14B	SS39-DPT-14 11/07/2010 10 to 12 N SS39-DPT-14C
Test Group	Parameter						
Metals, Total	Arsenic	0.59	0.44 U	1.8	0.6	0.51	0.58
	Barium	32.2 J	15 J	51.1 J	29 J	15.6 J	49.2 J
	Cadmium	0.3	0.11 J	0.71	0.32	0.17	0.25
	Chromium [(2)]	2.7 J	1.8 J	6.1	2.1 J	1.8 J	2.8 J
	Lead	1.3	0.72 J	2.5 J	1.2 J	0.94 J	0.71 U
	Selenium	1.8 U	2.1 U	2.2 U	1.9 U	1.7 U	1.7 U
	Silver	0.045 U	0.051 U	0.054 U	0.047 U	0.042 U	0.042 U
		SS39-DPT-13 11/11/2010 2 to 4 N SS39-DPT-13AV	SS39-DPT-13 11/11/2010 7 to 9 N SS39-DPT-13BV	SS39-DPT-13 11/11/2010 10 to 12 N SS39-DPT-13CV	SS39-DPT-14 11/11/2010 2 to 4 N SS39-DPT-14AV	SS39-DPT-14 11/11/2010 5.5 to 7.5 N SS39-DPT-14BV	SS39-DPT-14 11/11/2010 10 to 12 N SS39-DPT-14CV
Test Group	Parameter						
VOCs	Acetone	0.017 U	0.018 U	0.017 U	0.016 U	0.017 U	0.019 U
	Methylene chloride	0.0039 U	0.0061 U	0.004 U	0.0078 U	0.0062 U	0.0125 U
	Tetrachloroethene	0.00085 U	0.00088 U	0.00087 U	0.0008 U	0.00084 U	0.00093 U
	Trichloroethene	0.001 U	0.0011 U	0.001 U	0.00096 U	0.001 U	0.0011 U
TPH	TPH C10-C28	3.6 U	3.5 U	3.7 U	3.5 U	3.5 U	3.7 U

Table 4-1. Screening of Chemicals Detected in Soil Samples (2010) for Direct Contact Risk
SS-39, Holloman Air Force Base

		SS39-DPT-14 11/07/2010 10 to 12 FD SS39-DPT-DUP03	SS39-DPT-15 11/08/2010 2 to 4 N SS39-DPT-15A	SS39-DPT-15 11/08/2010 6 to 8 N SS39-DPT-15B	SS39-DPT-15 11/08/2010 10 to 12 N SS39-DPT-15C	SS39-DPT-16 11/08/2010 1.5 to 3.5 N SS39-DPT-16A	SS39-DPT-16 11/08/2010 5 to 7 N SS39-DPT-16B	SS39-DPT-16 11/08/2010 10 to 12 N SS39-DPT-16C
Test Group	Parameter							
Metals, Total	Arsenic	0.44	0.79 J	0.75	0.77	0.68	0.7	0.95
	Barium	27.3 J	41.4 J	24	56	43.5	28.5	42.9
	Cadmium	0.34	0.45 J	0.31	0.5	0.42	0.054 U	0.14 J
	Chromium (2)	2.2 J	3.2 U	2 U	3.7 U	3 U	3.1 U	4.1 U
	Lead	1.4	1.2 J	1.1 J	1.6 J	1.3 J	1.1	1.6
	Selenium	1.7 U	1.7 UJ	2 U	2 U	2.2 U	2.2 U	2.3 U
	Silver	0.043 U	0.28 J	0.051 U	0.05 U	0.054 U	0.054 U	0.057 U
		SS39-DPT-14 11/11/2010 10 to 12 FD SS39-DPT-DUP03V	SS39-DPT-15 11/08/2010 2 to 4 N SS39-DPT-15A	SS39-DPT-15 11/08/2010 6 to 8 N SS39-DPT-15B	SS39-DPT-15 11/08/2010 10 to 12 N SS39-DPT-15C	SS39-DPT-16 11/08/2010 1.5 to 3.5 N SS39-DPT-16A	SS39-DPT-16 11/08/2010 5 to 7 N SS39-DPT-16B	SS39-DPT-16 11/08/2010 10 to 12 N SS39-DPT-16C
Test Group	Parameter							
VOCs	Acetone	0.016 R	0.02 R	0.02 R	0.018 R	0.021 R	0.022 R	0.02 R
	Methylene chloride	0.0132 U	0.0084 U	0.0045 U	0.0066 U	0.0248 U	0.0105 U	0.0151 U
	Tetrachloroethene	0.00079 U	0.001 U	0.00098 U	0.00092 U	0.0011 U	0.0011 U	0.00098 U
	Trichloroethene	0.00095 U	0.0012 U	0.0012 U	0.0011 U	0.0013 U	0.0013 U	0.0012 U
TPH	TPH C10-C28	3.5 U	4 U	4 U	4 U	4.1 U	4 U	4.2 U

Table 4-1. Screening of Chemicals Detected in Soil Samples (2010) for Direct Contact Risk
SS-39, Holloman Air Force Base

Notes:
All units are milligrams per kilogram (mg/kg).

(1) NMED Soil Screening Levels: NEW MEXICO ENVIRONMENT DEPARTMENT Hazardous Waste Bureau and Ground Water Quality Bureau Voluntary Remediation Program, Table A-1, TECHNICAL BACKGROUND DOCUMENT FOR DEVELOPMENT OF SOIL SCREENING LEVELS, REVISION 5.0, July 2009

Underlined screening levels from EPA June 2011 SL table.
(2) NMED criteria for chromium VI used in screening.
Red indicates > Residential SSLs for direct contact
Italics indicates > Commerical/Industrial SSLs for direct contact
Yellow shade indicates > Construction Worker SSLs for direct contact

Table 4-2. Screening of Chemicals Detected in Soil Samples (2010) for Vapor Intrusion Risk
SS-39, Holloman Air Force Base

			Location:	SS39-DPT-01	SS39-DPT-01	SS39-DPT-01	SS39-DPT-01	SS39-DPT-02
			Collection Date:	11/08/2010	11/08/2010	11/08/2010	11/08/2010	11/08/2010
			Depth Range (ft):	0 to 2	0 to 2	3 to 5	7.5 to 9.5	0 to 2
			QCType:	N	FD	N	N	N
			SampleID:	SS39-DPT-01A	SS39-DPT-DUP05	SS39-DPT-01B	SS39-DPT-01C	SS39-DPT-02A
Test Group	Parameter	Vapor[1] Intrusion 1e-6	Vapor Intrusion 1e-5					
VOCs	Acetone	65.9	65.9	0.02 R	0.019 R	0.018 R	0.021 R	0.017 R
	Methylene chloride	0.025	0.254	0.0079 U	0.0043 U	0.0096 U	0.0137 U	0.008 U
	Tetrachloroethene	0.001	0.013	0.001 U	0.00093 U	0.00091 U	0.001 U	0.00087 U
	Trichloroethene	0.0001	0.0011	0.0012 U	0.0011 U	0.0011 U	0.0013 U	0.001 U

			Location:	SS39-DPT-02	SS39-DPT-02	SS39-DPT-03	SS39-DPT-03	SS39-DPT-03
			Collection Date:	11/08/2010	11/08/2010	11/08/2010	11/08/2010	11/08/2010
			Depth Range (ft):	3 to 5	6 to 8	0 to 2	3 to 5	6 to 8
			QCType:	N	N	N	N	N
			SampleID:	SS39-DPT-02B	SS39-DPT-02C	SS39-DPT-03A	SS39-DPT-03B	SS39-DPT-03C
Test Group	Parameter	Vapor[1] Intrusion 1e-6	Vapor Intrusion 1e-5					
VOCs	Acetone	65.9	65.9	0.02 R	0.018 R	0.018 R	0.017 R	0.018 R
	Methylene chloride	0.025	0.254	0.0102 U	0.0159 U	0.0063 U	0.0046 U	0.008 U
	Tetrachloroethene	0.001	0.013	0.00099 U	0.00091 U	0.00091 U	0.00087 U	0.00092 U
	Trichloroethene	0.0001	0.0011	0.0012 U	0.0011 U	0.0011 U	0.001 U	0.0011 U

Table 4-2. Screening of Chemicals Detected in Soil Samples (2010) for Vapor Intrusion Risk
SS-39, Holloman Air Force Base

		SS39-DPT-03 11/08/2010 6 to 8 FD SS39-DPT-DUP04	SS39-DPT-04 11/08/2010 0 to 2 N SS39-DPT-04A	SS39-DPT-04 11/08/2010 3 to 5 N SS39-DPT-04B	SS39-DPT-04 11/08/2010 6 to 8 N SS39-DPT-04C	SS39-DPT-05 11/10/2010 3 to 5 N SS39-DPT-05AV	SS39-DPT-05 11/10/2010 7 to 9 N SS39-DPT-05BV
Test Group	Parameter						
VOCs	Acetone	0.018 R	0.123 J	0.018 R	0.016 R	0.019 R	0.022 R
	Methylene chloride	0.0085 U	0.0123 U	0.0047 U	0.0063 U	0.0053 J	0.005 U
	Tetrachloroethene	0.00092 U	0.0009 U	0.00092 U	0.00082 U	***0.0047***	0.0011 U
	Trichloroethene	0.0011 U	0.0011 U	***0.0098***	***0.003*** J	0.0011 U	0.0013 U

		SS39-DPT-05 11/10/2010 10 to 12 N SS39-DPT-05CV	SS39-DPT-06 11/10/2010 3 to 5 N SS39-DPT-06AV	SS39-DPT-06 11/10/2010 7 to 9 N SS39-DPT-06BV	SS39-DPT-06 11/10/2010 10 to 12 N SS39-DPT-06CV	SS39-DPT-07 11/11/2010 2 to 4 N SS39-DPT-07AV	SS39-DPT-07 11/11/2010 7 to 9 N SS39-DPT-07BV
Test Group	Parameter						
VOCs	Acetone	0.015 R	0.016 R	0.015 U	0.015 U	0.017 U	0.016 U
	Methylene chloride	0.0035 U	0.0037 U	0.0036 U	0.0034 U	0.0038 U	0.0036 U
	Tetrachloroethene	***0.011***	***0.0532***	***0.0078***	***0.0737***	***0.0031*** J	0.00096 J
	Trichloroethene	0.00091 U	0.00097 U	0.00093 U	0.00087 U	0.001 U	0.00094 U

Table 4-2. Screening of Chemicals Detected in Soil Samples (2010) for Vapor Intrusion Risk
SS-39, Holloman Air Force Base

		SS39-DPT-07 11/11/2010 10 to 12 N SS39-DPT-07CV	SS39-DPT-07 11/11/2010 10 to 12 FD SS39-DPT-DUP01V	SS39-DPT-08 11/11/2010 2 to 4 N SS39-DPT-08AV	SS39-DPT-08 11/11/2010 7 to 9 N SS39-DPT-08BV	SS39-DPT-08 11/11/2010 10 to 12 N SS39-DPT-08CV	SS39-DPT-09 11/11/2010 1.75 to 3.75 N SS39-DPT-09AV
Test Group	Parameter						
VOCs	Acetone	0.016 U	0.022 U	0.023 U	0.019 U	0.015 U	0.02 U
	Methylene chloride	0.0138 J	0.005 UJ	0.0054 U	0.0045 U	0.0046 J	0.0119
	Tetrachloroethene	***0.0015*** J	0.0011 U	***0.0045*** J	0.00097 U	***0.0595***	0.001 U
	Trichloroethene	0.00095 U	0.0013 U	0.0014 U	0.0012 U	0.00087 U	0.0012 U

		SS39-DPT-09 11/11/2010 5.75 to 7.75 N SS39-DPT-09BV	SS39-DPT-09 11/11/2010 10 to 12 N SS39-DPT-09CV	SS39-DPT-10 11/11/2010 1.25 to 3.25 N SS39-DPT-10AV	SS39-DPT-10 11/11/2010 5.5 to 7.5 N SS39-DPT-10BV	SS39-DPT-10 11/11/2010 10 to 12 N SS39-DPT-10CV	SS39-DPT-10 11/11/2010 10 to 12 FD SS39-DPT-DUP02V
Test Group	Parameter						
VOCs	Acetone	0.015 U	0.017 U	0.019 U	0.017 U	0.018 U	0.018 U
	Methylene chloride	0.007 J	0.0073 J	0.0113	0.0094	0.0155 U	0.0084 U
	Tetrachloroethene	***0.0048***	0.00083 U	0.00097 U	***0.008***	***0.0017*** J	***0.0014*** J
	Trichloroethene	0.00087 U	0.00099 U	0.0012 U	0.001 U	0.0011 U	0.0011 U

Table 4-2. Screening of Chemicals Detected in Soil Samples (2010) for Vapor Intrusion Risk
SS-39, Holloman Air Force Base

		SS39-DPT-11 11/11/2010 1.75 to 3.75 N SS39-DPT-11AV	SS39-DPT-11 11/11/2010 5.75 to 7.75 N SS39-DPT-11BV	SS39-DPT-11 11/11/2010 10 to 12 N SS39-DPT-11CV	SS39-DPT-12 11/11/2010 2 to 4 N SS39-DPT-12AV	SS39-DPT-12 11/11/2010 5.75 to 7.75 N SS39-DPT-12BV	SS39-DPT-12 11/11/2010 10 to 12 N SS39-DPT-12CV
Test Group	Parameter						
VOCs	Acetone	0.015 U	0.015 U	0.017 U	0.019 U	0.021 U	0.016 UJ
	Methylene chloride	0.0075 U	0.0077 U	0.0102	0.0119 U	0.0154 U	0.0168 U
	Tetrachloroethene	0.00073 U	0.00076 U	0.00085 U	0.00096 U	0.0011 U	0.00081 U
	Trichloroethene	0.00088 U	0.00091 U	0.001 U	0.0011 U	0.0013 U	0.00097 U

		SS39-DPT-13 11/11/2010 2 to 4 N SS39-DPT-13AV	SS39-DPT-13 11/11/2010 7 to 9 N SS39-DPT-13BV	SS39-DPT-13 11/11/2010 10 to 12 N SS39-DPT-13CV	SS39-DPT-14 11/11/2010 2 to 4 N SS39-DPT-14AV	SS39-DPT-14 11/11/2010 5.5 to 7.5 N SS39-DPT-14BV	SS39-DPT-14 11/11/2010 10 to 12 N SS39-DPT-14CV
Test Group	Parameter						
VOCs	Acetone	0.017 U	0.018 U	0.017 U	0.016 U	0.017 U	0.019 U
	Methylene chloride	0.0039 U	0.0061 U	0.004 U	0.0078 U	0.0062 U	0.0125 U
	Tetrachloroethene	0.00085 U	0.00088 U	0.00087 U	0.0008 U	0.00084 U	0.00093 U
	Trichloroethene	0.001 U	0.0011 U	0.001 U	0.00096 U	0.001 U	0.0011 U

Table 4-2. Screening of Chemicals Detected in Soil Samples (2010) for Vapor Intrusion Risk
SS-39, Holloman Air Force Base

		SS39-DPT-14 11/11/2010 10 to 12 FD SS39-DPT-DUP03V	SS39-DPT-15 11/08/2010 2 to 4 N SS39-DPT-15A	SS39-DPT-15 11/08/2010 6 to 8 N SS39-DPT-15B	SS39-DPT-15 11/08/2010 10 to 12 N SS39-DPT-15C	SS39-DPT-16 11/08/2010 1.5 to 3.5 N SS39-DPT-16A	SS39-DPT-16 11/08/2010 5 to 7 N SS39-DPT-16B
Test Group	Parameter						
VOCs	Acetone	0.016 R	0.02 R	0.02 R	0.018 R	0.021 R	0.022 R
	Methylene chloride	0.0132 U	0.0084 U	0.0045 U	0.0066 U	0.0248 U	0.0105 U
	Tetrachloroethene	0.00079 U	0.001 U	0.00098 U	0.00092 U	0.0011 U	0.0011 U
	Trichloroethene	0.00095 U	0.0012 U	0.0012 U	0.0011 U	0.0013 U	0.0013 U

		SS39-DPT-16 11/08/2010 10 to 12 N SS39-DPT-16C
Test Group	Parameter	
VOCs	Acetone	0.02 R
	Methylene chloride	0.0151 U
	Tetrachloroethene	0.00098 U
	Trichloroethene	0.0012 U

Table 4-2. Screening of Chemicals Detected in Soil Samples (2010) for Vapor Intrusion Risk
SS-39, Holloman Air Force Base

Notes:

All units are milligrams per kilogram (mg/kg).

(1) Johnson and Ettinger (1991) Model for Subsurface Vapor Intrusion into Buildings incorporated into Appendix G of of the EPA OSWER Draft Guidance for Evaluating the Vapor Intrusion to Indoor Air Pathway (November, 2002).

Red indicates > 1e-6 VI risk level for indoor air.

Yellow shade indicates > 1e-5 VI risk level for indoor air.

Table 4-3. Screening of Chemicals Detected in Groundwater (2008-2011) for Direct Contact and Vapor Intrusion Risk Site SS-39, Holloman AFB, New Mexico

			Location:	MW39-02	MW39-02	MW39-02	MW39-02	MW39-02	MW39-02	MW39-02
			Collection Date:	07/10/2008	01/08/2009	07/08/2009	01/07/2010	07/08/2010	01/28/2011	07/13/2011
			QCType:	N	N	N	N	N	N	N
			SampleID:	MW-39-02-071008	MW-39-02-010809	MW39-02-070809	MW39-02-010710	MW39-02-070810	MW39-02-012811	MW39-02-071311
TestGroup	Parameter	NMED Tapwater (µg/L) (1)	Vapor Intrusion (ug/L)(2)							
VOCs	1,1,1-Trichloroethane	9130	3100	0.33 U	0.35 J	0.33 U	0.5 J	0.22 U	0.2 U	0.2 U
	1,1,2-Trichloroethane	2.42	41	0.26 U	0.26 U	0.26 U	0.26 U	0.29 U	0.22 U	0.22 U
	1,1-Dichloroethene	340	190	0.54 U	0.54 U	0.54 U	0.54 U	0.29 U	0.23 U	0.23 U
	2-Butanone	7060	440000	2 U	2 U	2 U	2 U	2 U	2 U	2 U
	2-Hexanone	--	--	5 U	5 U	5 U	5 U	5 U	4 U	4 U
	4-Methyl-2-pentanone	1990	14000	2 U	2 U	2 U	2 U	2 U	2 U	2 U
	Acetone	21800	220000	10 U	10 U	10 U	10 U	10 UJ	10 U	10 U
	Benzene	4.13	14	0.4 U	0.4 U	0.4 U	0.4 U	0.21 U	0.2 U	0.2 U
	Bromomethane	8.66	20	0.78 U	0.78 U	0.78 U	0.78 U	0.78 U	0.5 U	0.5 U
	Carbon tetrachloride	1.99	5	**4**	**3.8**	**3**	1.5	**2.9**	1.3	**3.4**
	Chloroform	1.93	80	1.6	**2.2**	1.7	1.8	1.8	1.2	**2.1**
	Chloromethane	17.8	67	0.61 U	0.61 U	0.61 U	0.61 U	0.5 U	0.5 U	0.5 U
	Cis-1,2-dichloroethene	365	210	0.2 U	0.2 U	0.2 U	0.2 U	0.32 U	0.26 U	0.26 U
	Cymene	--	--	0.32 U	0.32 U	0.32 U	0.32 U	0.21 U	0.21 U	0.21 U
	Methylene chloride	48	580	1 U	1 U	1 U	1 U	2 UJ	2 U	2 U
	Naphthalene	1.43	150	1 U	1 U	1 U	1 U	1 U	1 U	1 U
	Tetrachloroethene	1.08	11	0.22 U	0.32 J	0.22 U	0.35 J	0.44 U	0.25 U	0.25 U
	Trichloroethene	16.5	5	13.3	**28.9**	**17.7**	**25.1**	15.3	12.4	9.7
Perchlorate	Perchlorate	26	--	12	21	15	11	15	19	17
TPH	TPH-GRO (C6-C10)	--	--							
Metals, Dissolved	Arsenic	0.448	--	7.2 U	11 U	**23.2**	22 UJ	8 U	**5.1** J	**16** B
	Barium	7300	--	14.8 J	16.8 J	20 U	21.3	20 U	16.7 J	25 U
	Cadmium	18.3	--	2 U	2 U	4 U	4 U	4 U	1 U	5 U
	Chromium	100	--	3.2 U	4 U	8 U	8 U	4 U	2.4 J	7.9 B
	Lead	15	--	4 U	6 J	8 U	8 U	4.3 J	1 U	5 U
	Mercury	0.562	0.68	0.14 U	0.15 U	0.15 UJ	0.15 U	0.071 U	0.05 U	0.083 B
	Selenium	183	--	27.3	24.7	37.1	43.8	21.3 J	16 J	29.8 B
	Silver	183	--	2.4 U	2.8 U	6.6	5.6 U	4 U	1 U	5 U
Metals, Total	Arsenic	0.448	--	**12.6** J	**14.9** J	22 U	22 UJ	8 U	**4.7** J	**19.6** B
	Barium	7300	--	18.1 J	18.1 J	20 U	20 U	20 U	17.3 J	25 U
	Cadmium	18.3	--	2 U	2 U	4 U	4 U	4 U	1 U	5 U
	Chromium	100	--	3.2 U	4 U	8 U	8 U	4 U	2.3 J	5 U
	Lead	15	--	4 U	7 U	8 U	8 U	4 U	1 U	5 U
	Mercury	0.562	0.68	0.14 U	0.15 U	0.15 UJ	0.15 U	0.071 U	0.05 U	0.079 B
	Selenium	183	--	28.9	29.7	38.5	39.9	22.7 J	12.1 J	36 B
	Silver	183	--	2.4 U	2.8 U	5.6 U	5.6 U	4 U	1 U	5 U
Gen. Chem.	Solids, total dissolved	10,000	--	**16900**	**15800**	**12200**	**11300**	**14800**	**12500**	**12000**

Table 4-3. Screening of Chemicals Detected in Groundwater (2008-2011) for Direct Contact and Vapor Intrusion Risk Site SS-39, Holloman AFB, New Mexico

		MW39-03 07/08/2010 N MW39-03-070810	MW39-05 07/10/2008 N MW-39-05-071008	MW39-05 01/08/2009 N MW-39-05-010809	MW39-05 07/08/2009 N MW39-05-070809	MW39-05 01/07/2010 N MW39-05-010710	MW39-05 07/08/2010 N MW39-05-070810	MW39-05 01/28/2011 N MW39-05-012811	MW39-05 07/13/2011 N MW39-05-071311
TestGroup	Parameter								
VOCs	1,1,1-Trichloroethane	0.22 U	0.33 U	0.33 U	0.33 U	0.33 U	0.22 U	0.2 U	0.2 U
	1,1,2-Trichloroethane	0.29 U	0.26 U	0.26 U	0.26 U	0.26 U	0.29 U	0.22 U	0.22 U
	1,1-Dichloroethene	0.29 U	0.54 U	0.54 U	0.54 U	0.54 U	0.29 U	0.23 U	0.23 U
	2-Butanone	2 U	2 U	2 U	2 U	2 U	2 U	2 U	2 U
	2-Hexanone	5 U	5 U	5 U	5 U	5 U	5 U	4 U	4 U
	4-Methyl-2-pentanone	2 U	2 U	2 U	2 U	2 U	2 U	2 U	2 U
	Acetone	10 U	10 U	10 U	10 U	10 U	10 UJ	10 U	10 U
	Benzene	0.21 U	0.4 U	0.4 U	0.4 U	0.4 U	0.21 U	0.2 U	0.2 U
	Bromomethane	0.78 U	0.78 U	0.78 U	0.78 U	0.78 U	0.78 U	0.5 U	0.5 U
	Carbon tetrachloride	0.34 U	0.22 U	0.22 U	0.22 U	0.22 U	0.34 U	0.25 U	0.25 U
	Chloroform	0.67 J	0.28 U	0.28 U	0.28 U	0.28 U	0.25 U	0.22 U	0.22 U
	Chloromethane	0.5 U	0.61 U	0.61 U	0.61 U	0.61 U	0.5 U	0.5 U	0.5 U
	Cis-1,2-dichloroethene	0.32 U	0.2 U	0.2 U	0.2 U	0.2 U	0.32 U	0.26 U	0.26 U
	Cymene	0.21 U	0.32 U	0.32 U	0.32 U	0.32 U	0.21 U	0.21 U	0.21 U
	Methylene chloride	2 U	1 U	1 U	1 U	1 U	2 UJ	2 U	2 U
	Naphthalene	1 U	1 U	1 U	1 U	1 U	1 U	1 U	1 U
	Tetrachloroethene	0.44 U	0.22 U	0.22 U	0.22 U	0.22 U	0.44 U	0.25 U	0.25 U
	Trichloroethene	1.3	9.5	**19.1**	14	**25.9**	15.6	**18.4**	**19.5**
Perchlorate	Perchlorate	**31**	23	**27**	24	17	19	24	26
TPH	TPH-GRO (C6-C10)								
Metals, Dissolved	Arsenic	**10.1** J	72 U	54 U	110 U	110 UJ	40 U	10 U	10 U
	Barium	11.3 J	100 U	50 U	100 U	100 U	100 U	22.2 J	25 U
	Cadmium	2 U	20 U	10 U	20 U	20 U	20 U	5 U	5 U
	Chromium	2 U	32 U	20 U	40 U	40 U	20 U	5 U	5.2 B
	Lead	4.2 J	40 U	20 U	40 U	40 U	20 U	10 U	10 U
	Mercury	0.071 U	0.14 U	0.15 U	0.15 UJ	0.15 U	0.071 U	0.05 U	0.088 B
	Selenium	10.2 J	93.4 J	74.2 J	87.5	79.1	40 U	55.5	83.7
	Silver	2 U	24 U	14 U	28 U	28 U	20 U	5 U	5 U
Metals, Total	Arsenic	**7.4** J	72 U	54 U	110 U	110 UJ	40 U	10 U	10 U
	Barium	12.3 J	248 J	50 U	100 U	100 U	100 U	15.9 J	25 U
	Cadmium	2 U	20 U	10 U	20 U	20 U	20 U	5 U	5 U
	Chromium	2 U	32 U	20 U	40 U	40 U	20 U	5 U	5 U
	Lead	2.8 J	40 U	20 U	40 U	40 U	20 U	10 U	10 U
	Mercury	0.071 U	0.14 U	0.15 U	0.15 UJ	0.15 U	0.071 U	0.05 U	0.1 B
	Selenium	7.8 J	62 U	87.5 J	109	84	78.7 J	54.6	79.9
	Silver	2 U	24 U	14 U	28 U	28 U	20 U	5 U	5 U
Gen. Chem.	Solids, total dissolved	**10900**	**57900**	**75400**	**85500**	**85000**	**60000**	**69800**	**72600**

Table 4-3. Screening of Chemicals Detected in Groundwater (2008-2011) for Direct Contact and Vapor Intrusion Risk Site SS-39, Holloman AFB, New Mexico

		MW39-06 07/10/2008 N MW-39-06-071008	MW39-06 01/08/2009 N MW-39-06-010809	MW39-06 07/07/2009 N MW39-06-070709	MW39-06 01/06/2010 N MW39-06-010610	MW39-06 07/08/2010 N MW39-06-070810	MW39-06 01/26/2011 N MW39-06-012611	MW39-06 07/12/2011 N MW39-06-071211	MW39-06D 07/10/2008 N MW-39-06D-071008
TestGroup	Parameter								
VOCs	1,1,1-Trichloroethane	0.33 U	0.66 U	0.33 U	1.7 U	0.22 U	0.4 UJ	0.4 U	1.7 U
	1,1,2-Trichloroethane	0.26 U	0.52 U	0.26 U	1.3 U	0.29 U	0.44 UJ	0.44 U	1.3 U
	1,1-Dichloroethene	1	1.8 J	1.2	2.7 U	1.1	1.1 J	1.2 J	2.7 U
	2-Butanone	2 U	4 U	2 U	10 U	2 U	4 UJ	4 U	10 U
	2-Hexanone	5 U	10 U	5 U	25 U	5 U	8 UJ	8 U	25 U
	4-Methyl-2-pentanone	2 U	4 U	2 U	10 U	2 U	4 UJ	4 U	10 U
	Acetone	10 U	20 U	10 UJ	50 U	10 UJ	20 UJ	20 U	50 U
	Benzene	0.4 U	0.8 U	0.4 U	2 U	0.21 U	0.4 UJ	0.4 U	2 U
	Bromomethane	0.78 U	1.6 U	0.78 U	3.9 U	0.78 U	1 UJ	1 U	3.9 U
	Carbon tetrachloride	**2.3**	**2.2**	**2.2**	**2.1** J	1.6	1.9 J	**2**	1.1 U
	Chloroform	**2.4**	**2.4**	**2.3**	**2** J	**2.1**	**2.3** J	**2.2**	1.4 U
	Chloromethane	0.61 U	1.2 U	0.61 U	3.1 U	0.5 U	1 UJ	1 U	3.1 U
	Cis-1,2-dichloroethene	0.2 U	0.4 U	0.2 U	1 U	0.32 U	0.52 UJ	0.52 U	1 U
	Cymene	0.32 U	0.64 U	0.32 U	1.6 U	0.21 U	0.42 UJ	0.42 U	1.6 U
	Methylene chloride	1 U	7.7 J	1 U	25 U	2 UJ	4 UJ	4 U	5 U
	Naphthalene	1 U	2 U	1 U	5 U	1 U	2 UJ	2 U	5 U
	Tetrachloroethene	0.38 J	0.44 U	0.33 J	1.1 U	0.44 U	0.5 UJ	0.5 U	1.1 U
	Trichloroethene	**94.4**	**158**	**108**	**208**	**98.6**	**119** J	**127**	**355**
Perchlorate	Perchlorate	**29**	**38**	**28**	25	21	21	21	**31**
TPH	TPH-GRO (C6-C10)								
Metals, Dissolved	Arsenic	18 U	27 U	27 U	27 UJ	10 U	**5.5** J	**11.3** B	72 U
	Barium	25 U	25 U	25 U	25 U	25 U	16.5 J	25 U	100 U
	Cadmium	5 U	5 U	5 U	5 U	5 U	1 U	5 U	20 U
	Chromium	8 U	10 U	10 U	10 U	5 U	5 U	5 U	32 U
	Lead	10 U	10 U	10 U	10 U	6.9 J	5 U	5 U	40 U
	Mercury	0.14 U	0.25 J	0.15 UJ	0.15 U	0.071 U	0.05 U	0.094 B	0.14 U
	Selenium	43.4 J	40.5 J	38.3	40.9	38.8 J	10 U	27.3 B	120 J
	Silver	6 U	7 U	7 U	7 U	5 U	1 U	5 U	24 U
Metals, Total	Arsenic	18 U	27 U	27 U	27 UJ	**11.4** J	**3.4** J	10 U	72 U
	Barium	168 J	25 U	25 U	25 U	25 U	16 J	25 U	100 U
	Cadmium	5 U	5 U	5 U	5 U	5 U	1 U	5 U	20 U
	Chromium	15.6 J	10 U	10 U	10 U	5 U	5 U	7.7 B	32 U
	Lead	**22.4** J	10 U	10 U	10 U	5 U	5 U	5 U	40 U
	Mercury	0.14 U	0.15 U	0.15 UJ	0.15 U	0.071 U	0.05 U	0.07 B	0.14 U
	Selenium	54.9	28.9 J	32.6	57.7	30.7 J	10 U	33.9 B	62 U
	Silver	6 U	7 U	7 U	7 U	5 U	1 U	5 U	24 U
Gen. Chem.	Solids, total dissolved	**30800**	**32200**	**33200**	**28000**	**26400**	**26500**	**93100**	**111000**

Table 4-3. Screening of Chemicals Detected in Groundwater (2008-2011) for Direct Contact and Vapor Intrusion Risk Site SS-39, Holloman AFB, New Mexico

		MW39-06D 07/10/2008 FD MW-39-DUP01-071008	MW39-06D 01/08/2009 N MW-39-06D-010809	MW39-06D 01/08/2009 FD MW-39-DUP01-010809	MW39-06D 07/07/2009 N MW39-06D-070709	MW39-06D 07/07/2009 FD MW39-06D-070709 DUP	MW39-06D 01/06/2010 N MW39-06D-010610	MW39-06D 01/06/2010 FD MW39-DUP01-010610	MW39-06D 07/08/2010 N MW39-06D-070810
TestGroup	Parameter								
VOCs	1,1,1-Trichloroethane	1.7 U	3.3 U	1.7 U	1.7 U	1.7 U	0.33 U	0.33 U	1.1 U
	1,1,2-Trichloroethane	1.3 U	2.6 U	1.3 U	1.3 U	1.3 U	0.26 U	0.26 U	1.5 U
	1,1-Dichloroethene	2.7 U	5.4 U	2.7 U	2.7 U	2.7 U	2.4	2.1	1.5 U
	2-Butanone	10 U	20 U	10 U	10 U	10 U	2 U	2 U	10 U
	2-Hexanone	25 U	50 U	25 U	25 U	25 U	5 U	5 U	25 U
	4-Methyl-2-pentanone	10 U	20 U	10 U	10 U	10 U	2 U	2 U	10 U
	Acetone	50 U	100 U	50 U	50 UJ	50 UJ	10 U	10 U	50 U
	Benzene	2 U	4 U	2 U	2 U	2 U	0.4 U	0.4 U	1.1 U
	Bromomethane	3.9 U	7.8 U	3.9 U	3.9 U	3.9 U	0.78 U	0.78 U	3.9 U
	Carbon tetrachloride	1.1 U	2.2 U	1.1 U	1.1 U	1.1 U	0.22 U	0.22 U	1.7 U
	Chloroform	1.4 U	2.8 U	1.4 U	1.4 U	1.4 U	0.82 J	0.78 J	1.3 U
	Chloromethane	3.1 U	6.1 U	3.1 U	3.1 U	3.1 U	0.61 U	0.61 U	2.5 U
	Cis-1,2-dichloroethene	1 U	2 U	1 U	1 U	1 U	0.2 U	0.2 U	1.6 U
	Cymene	1.6 U	3.2 U	1.6 U	1.6 U	1.6 U	0.32 U	0.32 U	1.1 U
	Methylene chloride	5 U	27.5 J	13.5 J	6.2 J	5.5 J	1 U	1 U	10 U
	Naphthalene	5 U	10 U	5 U	5 U	5 U	1 U	1 U	5 U
	Tetrachloroethene	1.1 U	2.2 U	1.1 U	1.1 U	1.1 U	0.22 U	0.22 U	2.2 U
	Trichloroethene	**332**	**464**	**477**	**336**	**342**	**328**	**319**	**301**
Perchlorate	Perchlorate	**32**	**33**	**31**	**28**	26	**28**	**27**	**28**
TPH	TPH-GRO (C6-C10)								
Metals, Dissolved	Arsenic	110 U	110 U	110 U	110 U	110 U	110 UJ	110 UJ	80 U
	Barium	100 U	100 U	100 U	100 U	100 U	100 U	100 U	200 U
	Cadmium	20 U	20 U	20 U	20 U	20 U	20 U	20 U	40 U
	Chromium	40 U	40 U	40 U	40 U	40 U	40 U	40 U	40 U
	Lead	40 U	40 U	40 U	40 U	40 U	40 U	40 U	40 U
	Mercury	0.15 U	0.15 U	0.2 J	0.15 UJ	0.15 UJ	0.15 U	0.15 U	0.071 U
	Selenium	68 U	102 J	68 U	111	68 U	68 U	102	80 U
	Silver	28 U	28 U	28 U	28 U	28 U	28 U	28 U	40 U
Metals, Total	Arsenic	72 U	110 U	110 U	110 U	110 U	110 UJ	110 UJ	80 U
	Barium	100 U	100 U	100 U	100 U	100 U	100 U	100 U	200 U
	Cadmium	20 U	20 U	20 U	20 U	20 U	20 U	20 U	40 U
	Chromium	32 U	40 U	40 U	40 U	40 U	40 U	40 U	40 U
	Lead	40 U	40 U	40 U	40 U	40 U	40 U	40 U	40 U
	Mercury	0.14 U	0.15 U	0.15 U	0.15 UJ	0.15 UJ	0.15 U	0.15 U	0.071 U
	Selenium	62 U	91.5 J	104 J	92.2	86.4	103	73.2	80 U
	Silver	24 U	28 U	28 U	28 U	28 U	28 U	28 U	40 U
Gen. Chem.	Solids, total dissolved	**109000**	**97600**	**99200**	**98600**	**78900**	**102000**	**99000**	**78700**

Table 4-3. Screening of Chemicals Detected in Groundwater (2008-2011) for Direct Contact and Vapor Intrusion Risk Site SS-39, Holloman AFB, New Mexico

		MW39-06D 07/08/2010 FD MW39-DUP01-070810	MW39-06D 01/26/2011 N MW39-DUP01-012611	MW39-06D 01/26/2011 N MW39-06D-012611	MW39-06D 07/12/2011 N MW39-06D-071211	MW39-06D 07/12/2011 FD MW39-DUP01-071211	MW39-07 07/10/2008 N MW-39-07-071008	MW39-07 01/08/2009 N MW-39-07-010809	MW39-07 07/08/2009 N MW39-07-070809
TestGroup	Parameter								
VOCs	1,1,1-Trichloroethane	1.1 U	1 U	1 U	2 U	2 U	0.33 U	0.33 U	0.33 U
	1,1,2-Trichloroethane	1.5 U	1.1 U	1.1 U	2.2 U	2.2 U	0.26 U	0.26 U	0.26 U
	1,1-Dichloroethene	1.6 J	1.8 J	1.6 J	2.3 U	2.3 U	0.54 U	0.54 U	0.54 U
	2-Butanone	10 U	10 U	10 U	20 U	20 U	2 U	2 U	2 U
	2-Hexanone	25 U	20 U	20 U	40 U	40 U	5 U	5 U	5 U
	4-Methyl-2-pentanone	10 U	10 U	10 U	20 U	20 U	2 U	2 U	2 U
	Acetone	50 U	50 U	50 U	100 U	100 U	10 U	10 U	10 U
	Benzene	1.1 U	1 U	1 U	2 U	2 U	0.4 U	0.4 U	0.4 U
	Bromomethane	3.9 U	2.5 U	2.5 U	5 U	5 U	0.78 U	0.78 U	0.78 U
	Carbon tetrachloride	1.7 U	1.3 U	1.3 U	2.5 U	2.5 U	0.22 U	0.22 U	0.22 U
	Chloroform	1.3 U	1.1 U	1.1 U	2.2 U	2.2 U	0.28 U	0.28 U	0.28 U
	Chloromethane	2.5 U	2.5 U	2.5 U	5 U	5 U	0.61 U	0.61 U	0.61 U
	Cis-1,2-dichloroethene	1.6 U	1.3 U	1.3 U	2.6 U	2.6 U	0.2 U	0.2 U	0.2 U
	Cymene	1.1 U	1.1 U	1.1 U	2.1 U	2.1 U	0.32 U	0.32 U	0.32 U
	Methylene chloride	10 U	10 U	10 U	20 U	20 U	1 U	1 U	1 U
	Naphthalene	5 U	5 U	5 UJ	10 U	10 U	1 U	1 U	1 U
	Tetrachloroethene	2.2 U	1.3 U	1.3 U	2.5 U	2.5 U	0.22 U	0.22 U	0.22 U
	Trichloroethene	**330**	**353**	**349**	**447**	**462**	0.76 J	2	1.4
Perchlorate	Perchlorate	**28**	**30**	**29**	**33**	**33**	**66**	**63**	**59**
TPH	TPH-GRO (C6-C10)								
Metals, Dissolved	Arsenic	80 U	20 U	**21.3** J	10 U	10 U	36 U	54 U	54 U
	Barium	200 U	23.7 J	23.9 J	25 U	25.8 B	50 U	50 U	50 U
	Cadmium	40 U	10 U	10 U	5 U	5 U	10 U	10 U	10 U
	Chromium	40 U	10 U	10 U	5 U	5 U	16 U	20 U	20 U
	Lead	40 U	10 U	10 U	10 U	10 U	20 U	20 U	20 U
	Mercury	0.071 U	0.05 U	0.05 U	0.095 B	0.14 B	0.14 U	0.15 U	0.15 UJ
	Selenium	116 J	20 U	20 U	67.4	70.6	31 U	34 U	36.4 J
	Silver	40 U	10 U	10 U	5 U	5 U	12 U	14 U	14 U
Metals, Total	Arsenic	80 U	20 U	20 U	10 U	10 U	36 U	**59.1** J	54 U
	Barium	200 U	25.1 J	25.2 J	25.2 B	25.1 B	389 J	50 U	50 U
	Cadmium	40 U	10 U	10 U	5 U	5 U	10 U	10 U	10 U
	Chromium	40 U	10 U	10 U	5 U	5 U	26.5 J	20 U	20 U
	Lead	40 U	10 U	10 U	10 U	10 U	**38.4** J	20 U	20 U
	Mercury	0.071 U	0.05 U	0.05 U	0.077 B	0.073 B	0.14 U	0.15 U	0.15 UJ
	Selenium	97.8 J	20 U	20 U	80.9	76.7	31 U	34 U	60
	Silver	40 U	10 U	10 U	5 U	5 U	12 U	14 U	14 U
Gen. Chem.	Solids, total dissolved	**85000**	**91600**	**94500**	**69500**	**118000**	**53500**	**56400**	**23000**

Table 4-3. Screening of Chemicals Detected in Groundwater (2008-2011) for Direct Contact and Vapor Intrusion Risk Site SS-39, Holloman AFB, New Mexico

		MW39-07 01/07/2010 N MW39-07-010710	MW39-07 07/07/2010 N MW39-07-070710	MW39-07 01/28/2011 N MW39-07-012811	MW39-07 07/13/2011 N MW39-07-071311	MW39-08 07/10/2008 N MW-39-08-071008	MW39-08 01/08/2009 N MW-39-08-010809	MW39-08 07/07/2009 N MW39-08-070709	MW39-08 01/06/2010 N MW39-08-010610
TestGroup	Parameter								
VOCs	1,1,1-Trichloroethane	0.33 U	0.22 U	0.2 U	0.2 U	0.33 U	0.33 U	0.33 U	0.33 U
	1,1,2-Trichloroethane	0.26 U	0.29 U	0.22 U	0.22 U	0.26 U	0.26 U	0.26 U	0.26 U
	1,1-Dichloroethene	0.54 U	0.29 U	0.23 U	0.23 U	0.54 U	0.54 U	0.54 U	0.54 U
	2-Butanone	2 U	2 U	2 U	2 U	2 U	3.6 J	2 U	2.7 J
	2-Hexanone	5 U	5 U	4 U	4 U	5 U	5 U	5 U	50.6
	4-Methyl-2-pentanone	2 U	2 U	2 U	2 U	2 U	2 U	2 U	2 U
	Acetone	10 U	10 U	10 U	10 U	10 U	24.7 J	10 U	12.9 J
	Benzene	0.4 U	0.21 U	0.2 U	0.2 U	0.4 U	0.4 U	0.4 U	0.4 U
	Bromomethane	0.78 U	0.78 U	0.5 U	0.5 U	0.78 U	0.78 U	0.78 U	0.78 U
	Carbon tetrachloride	0.22 U	0.34 U	0.25 UJ	0.25 U	0.22 U	0.22 U	0.22 U	0.22 U
	Chloroform	0.28 U	0.25 U	0.22 U	0.22 U	0.28 U	0.28 U	0.28 U	0.28 U
	Chloromethane	0.61 U	0.5 U	0.5 U	0.5 U	0.61 U	0.61 U	0.67 J	0.61 U
	Cis-1,2-dichloroethene	0.2 U	0.32 U	0.26 U	0.26 U	0.2 U	0.2 U	0.71 J	0.46 J
	Cymene	0.32 U	0.21 U	0.21 U	0.21 U	0.32 U	0.32 U	0.32 U	0.32 U
	Methylene chloride	1 U	2 U	2 U	2 U	1 U	1 U	1 U	1 U
	Naphthalene	1 U	1 U	1 U	1 U	1 U	**2.3** J	1 U	1 U
	Tetrachloroethene	0.22 U	0.44 U	0.25 U	0.25 U	0.22 U	0.22 U	0.22 U	0.22 U
	Trichloroethene	0.93 J	0.77 J	0.91 J	1.2	**20.4**	**17.3**	10.3	**26**
Perchlorate	Perchlorate	**51**	**59**	**63**	**51** m	**83**	**81**	**74**	**65**
TPH	TPH-GRO (C6-C10)								
Metals, Dissolved	Arsenic	54 UJ	20 U	10 U	**22.5** B	72 U	110 U	110 U	110 UJ
	Barium	50 U	50 U	17.1 J	25 U	100 U	100 U	100 U	100 U
	Cadmium	10 U	10 U	5 U	5 U	20 U	20 U	20 U	20 U
	Chromium	20 U	10 U	5 U	5 U	32 U	40 U	40 U	40 U
	Lead	20 U	10 U	10 U	5 U	40 U	40 U	40 U	40 U
	Mercury	0.15 U	0.071 U	0.05 U	0.05 U	0.14 U	0.15 U	0.15 UJ	0.15 U
	Selenium	34 U	34.8 J	10 U	58.4	62 U	68 U	68 U	76.1
	Silver	14 U	10 U	5 U	5 U	24 U	28 U	28 U	28 U
Metals, Total	Arsenic	54 UJ	20 U	10 U	**24.2** B	72 U	110 U	110 U	110 UJ
	Barium	50 U	50 U	18.2 J	25 U	100 U	100 U	100 U	100 U
	Cadmium	10 U	10 U	5 U	5 U	20 U	20 U	20 U	20 U
	Chromium	20 U	10 U	5 U	5 U	32 U	40 U	40 U	40 U
	Lead	20 U	10 U	5 U	5 U	40 U	40 U	**41.2**	40 U
	Mercury	0.15 U	0.071 U	0.05 U	0.13 B	0.14 U	0.15 U	0.15 UJ	0.15 U
	Selenium	34 U	42.1 J	12 J	32.3 B	140 J	68 U	68 U	80.9
	Silver	14 U	10 U	5 U	5 U	24 U	28 U	28 U	28 U
Gen. Chem.	Solids, total dissolved	**41900**	**40300**	**47300**	**48500**	**88800**	**109000**	**88800**	**103000**

Table 4-3. Screening of Chemicals Detected in Groundwater (2008-2011) for Direct Contact and Vapor Intrusion Risk Site SS-39, Holloman AFB, New Mexico

		MW39-08 07/07/2010 N MW39-08-070710	MW39-08 01/27/2011 N MW39-08-012711	MW39-08 07/13/2011 N MW39-08-071311	MW39-09 07/09/2008 N MW-39-09-070908	MW39-09 01/07/2009 N MW39-09-010709	MW39-09 07/07/2009 N MW39-09-070709	MW39-09 01/06/2010 N MW39-09-010610	MW39-09 07/07/2010 N MW39-09-070710
TestGroup	Parameter								
VOCs	1,1,1-Trichloroethane	0.22 U	0.2 U	0.8 U	0.33 U	0.33 U	0.33 U	0.33 U	0.22 U
	1,1,2-Trichloroethane	0.29 U	0.22 U	0.88 U	0.26 U	0.26 U	0.26 U	0.26 U	0.29 U
	1,1-Dichloroethene	0.29 U	0.23 U	0.92 U	0.54 U	0.54 U	0.54 U	0.54 U	0.29 U
	2-Butanone	2 U	2 U	8 U	2 U	2.8 J	2 U	3.7 J	3 J
	2-Hexanone	20.6	5.6 J	16 U	5 U	127 J	5 U	15	55.7
	4-Methyl-2-pentanone	2 U	2 U	8 U	2 U	2 U	2 U	2 U	2 U
	Acetone	10 UJ	10 U	40 U	10 U	15.5 J	10 U	16.7 J	18.1 J
	Benzene	0.21 U	0.2 U	0.8 U	0.4 U	0.4 U	0.4 U	0.4 U	0.21 U
	Bromomethane	0.78 U	0.5 U	2 U	0.78 U	0.78 U	0.78 U	0.78 U	0.78 U
	Carbon tetrachloride	0.34 U	0.25 U	1 U	0.22 U	0.22 U	0.22 U	0.22 U	0.34 U
	Chloroform	0.25 U	0.22 U	1.3 J	0.28 U	0.28 U	0.28 U	0.28 U	0.25 U
	Chloromethane	0.5 U	0.5 U	2 U	0.61 U	0.61 U	0.61 U	0.61 U	0.58 J
	Cis-1,2-dichloroethene	0.52 J	0.3 J	1 U	0.2 U	0.2 U	0.2 U	0.2 U	0.32 U
	Cymene	0.21 U	0.21 U	0.84 U	0.32 U	0.32 U	0.32 U	0.32 U	0.43 J
	Methylene chloride	2 UJ	2 U	8 U	1 U	1 U	1 U	1 U	2 UJ
	Naphthalene	1 U	1 U	4 U	1 U	**1.8** J	1 U	1 U	1 U
	Tetrachloroethene	0.44 U	0.25 U	1 U	0.22 U	0.22 U	0.22 U	0.22 U	0.44 U
	Trichloroethene	**18.8**	14.2	**177**	0.32 U	0.32 U	0.32 U	0.32 U	0.24 U
Perchlorate	Perchlorate	**61**	**63**	**54**	**150**	**150**	**190**	**150**	**160**
TPH	TPH-GRO (C6-C10)								
Metals, Dissolved	Arsenic	80 U	20 U	**18.5** B	72 U	110 U	110 U	110 UJ	80 U
	Barium	200 U	46.2 J	36.9 B	100 U	100 U	100 U	100 U	200 U
	Cadmium	40 U	10 U	5 U	20 U	20 U	20 U	20 U	40 U
	Chromium	40 U	10 U	5 U	32 U	40 U	40 U	40 U	40 U
	Lead	40 U	10 U	10 U	40 U	40 U	40 U	40 U	40 U
	Mercury	0.071 U	0.05 U	0.05 U	0.14 U	0.15 U	0.15 UJ	0.15 U	0.071 U
	Selenium	96.1 J	20 U	44.2 B	89.7 J	68 U	68 U	68 U	91.4 J
	Silver	40 U	10 U	5 U	24 U	28 U	28 U	28 U	40 U
Metals, Total	Arsenic	80 U	20 U	10 U	72 U	110 U	110 U	110 UJ	80 U
	Barium	200 U	67.8 J	35 B	122 J	100 U	100 U	152	200 U
	Cadmium	40 U	10 U	5 U	20 U	20 U	20 U	20 U	40 U
	Chromium	40 U	10 U	5 U	32 U	40 U	40 U	40 U	40 U
	Lead	40 U	10 U	10 U	40 U	40 U	40 U	40 U	40 U
	Mercury	0.071 U	0.05 U	0.088 B	0.14 U	0.15 U	0.15 UJ	0.15 U	0.071 U
	Selenium	80 U	20 U	69.8	92.9 J	68 U	91.3	85.5	80 U
	Silver	40 U	10 U	5 U	24 U	28 U	28 U	28 U	40 U
Gen. Chem.	Solids, total dissolved	**107000**	**99500**	**105000**	**132000**	**128000**	**122000**	**107000**	**109000**

Table 4-3. Screening of Chemicals Detected in Groundwater (2008-2011) for Direct Contact and Vapor Intrusion Risk Site SS-39, Holloman AFB, New Mexico

		MW39-09 01/27/2011 N MW39-09-012711	MW39-09 07/13/2011 N MW39-09-071311	MW39-10 07/09/2008 N MW-39-10-070908	MW39-10 01/07/2009 N MW39-10-010709	MW39-10 07/07/2009 N MW39-10-070709	MW39-10 01/06/2010 N MW39-10-010610	MW39-10 07/07/2010 N MW39-10-070710	MW39-10 01/27/2011 N MW39-10-012711
TestGroup	Parameter								
VOCs	1,1,1-Trichloroethane	0.2 U	0.2 U	0.33 U	0.33 U	0.33 U	0.33 U	0.22 U	0.2 U
	1,1,2-Trichloroethane	0.22 U	0.22 U	0.26 U	0.26 U	0.26 U	0.26 U	0.29 U	0.22 U
	1,1-Dichloroethene	0.23 U	0.23 U	0.54 U	0.54 U	0.54 U	0.54 U	0.29 U	0.23 U
	2-Butanone	2.4 J	2 U	2 U	2 U	2 U	2.4 J	2 U	14
	2-Hexanone	4 U	4 U	5 U	10.8 J	5 U	7.8 J	5 U	27.9
	4-Methyl-2-pentanone	2 U	2 U	2 U	2 U	2 U	2 U	2 U	8.2
	Acetone	15.3 J	10 U	10 U	10 U	10 U	14 J	10 UJ	125
	Benzene	0.21 J	0.2 U	0.4 U	0.4 U	0.4 U	0.4 U	0.21 U	0.2 U
	Bromomethane	0.5 U	0.5 U	0.78 U	0.78 U	0.78 U	1.8 J	0.78 U	0.5 U
	Carbon tetrachloride	0.25 U	0.25 U	0.22 U	0.22 U	0.22 U	0.22 U	0.34 U	0.25 U
	Chloroform	0.22 U	0.22 U	0.28 U	0.28 U	0.28 U	0.28 U	0.25 U	0.22 U
	Chloromethane	0.68 J	0.9 J	0.61 U	0.69 J	0.61 U	1.6 J	0.5 U	1.2 J
	Cis-1,2-dichloroethene	0.26 U	0.26 U	0.2 U	0.2 U	0.2 U	0.2 U	0.32 U	0.26 U
	Cymene	0.21 U	0.21 U	0.32 U	0.32 U	0.32 U	0.32 U	0.21 U	0.21 U
	Methylene chloride	2 U	2 U	1 U	1 U	1 U	1 U	2 UJ	2 U
	Naphthalene	1 U	1 U	1 U	1 U	1 U	1 U	1 U	1 U
	Tetrachloroethene	0.25 U	0.25 U	0.22 U	0.22 U	0.22 U	0.22 U	0.44 U	0.25 U
	Trichloroethene	0.26 U	0.26 U	0.32 J	0.32 U	0.37 J	0.32 U	0.24 U	0.26 U
Perchlorate	Perchlorate	**140**	**170**	**150**	**140**	**170**	**130**	**110**	**100**
TPH	TPH-GRO (C6-C10)								
Metals, Dissolved	Arsenic	20 U	20 U	72 U	110 U	110 U	110 UJ	40 U	10 U
	Barium	34.6 J	50 U	100 U	100 U	100 U	100 U	100 U	32.7 J
	Cadmium	10 U	10 U	20 U	20 U	20 U	20 U	20 U	5 U
	Chromium	10 U	10 U	32 U	40 U	40 U	40 U	20 U	5 U
	Lead	10 U	10 U	40 U	40 U	40 U	40 U	20 U	20 U
	Mercury	0.05 U	0.05 U	0.14 U	0.15 U	0.15 UJ	0.15 U	0.071 U	0.05 U
	Selenium	20 U	76.2 B	62 U	90.4 J	68 U	68 U	50.7 J	35.5 J
	Silver	10 U	10 U	24 U	28 U	28 U	28 U	20 U	5 U
Metals, Total	Arsenic	**32.5** J	20 U	72 U	110 U	110 U	110 UJ	40 U	10 U
	Barium	602	50 U	115 J	162 J	100 U	100 U	369 J	41.2 J
	Cadmium	10 U	10 U	20 U	20 U	20 U	20 U	20 U	5 U
	Chromium	83.2 J	10 U	32 U	40 U	40 U	40 U	100 J	5 U
	Lead	**64.4**	10 U	40 U	40 U	40 U	40 U	20 U	**25.4** J
	Mercury	0.05 U	0.078 B	0.14 U	0.15 U	0.15 UJ	0.15 U	0.071 U	0.05 U
	Selenium	20 U	80 B	109 J	68 U	111	68.6	40 U	10 U
	Silver	10 U	10 U	24 U	28 U	28 U	28 U	20 U	5 U
Gen. Chem.	Solids, total dissolved	**109000**	**116000**	**129000**	**127000**	**110000**	**107000**	**39800**	**108000**

Table 4-3. Screening of Chemicals Detected in Groundwater (2008-2011) for Direct Contact and Vapor Intrusion Risk Site SS-39, Holloman AFB, New Mexico

		MW39-10 07/13/2011 N MW39-10-071311	MW39-11 07/10/2008 N MW-39-11-071008	MW39-11 01/08/2009 N MW-39-11-010809	MW39-11 07/07/2009 N MW39-11-070709	MW39-11 01/06/2010 N MW39-11-010610	MW39-11 07/07/2010 N MW39-11-070710	MW39-11 01/27/2011 N MW39-11-012711	MW39-11 07/13/2011 N MW39-11-071311
TestGroup	Parameter								
VOCs	1,1,1-Trichloroethane	0.2 U	0.33 U	0.33 U	0.33 U	0.33 U	0.22 U	0.2 U	0.2 U
	1,1,2-Trichloroethane	0.22 U	0.26 U	0.26 U	0.26 U	0.26 U	0.29 U	0.22 U	0.22 U
	1,1-Dichloroethene	0.23 U	0.54 U	0.54 U	0.54 U	0.54 U	0.29 U	0.27 J	0.23 U
	2-Butanone	2 U	2 U	6	2 U	5	2.8 J	2 U	2 U
	2-Hexanone	4 U	5 U	272 J	13.6	100	16.8	4.5 J	4 U
	4-Methyl-2-pentanone	2 U	2 U	4 J	2 U	2.2 J	3.2 J	2 U	2 U
	Acetone	10 U	10 U	40.5	10 U	31.1 J	20.2 J	10.6 J	10 U
	Benzene	0.2 U	0.4 U	0.4 U	0.4 U	0.4 U	0.21 U	0.2 U	0.2 U
	Bromomethane	0.5 U	0.78 U	0.78 U	0.78 U	0.78 U	0.78 U	0.5 U	0.5 U
	Carbon tetrachloride	0.25 U	0.22 U	0.22 U	0.22 U	0.22 U	0.34 U	0.25 U	0.25 U
	Chloroform	0.22 U	0.28 U	0.28 U	0.28 U	0.28 U	0.25 U	0.22 U	0.22 U
	Chloromethane	0.5 U	0.61 U	0.61 U	0.61 U	0.61 U	0.5 U	0.5 U	0.5 U
	Cis-1,2-dichloroethene	0.26 U	0.2 U	0.2 U	0.21 J	0.2 U	0.32 U	0.27 J	0.26 U
	Cymene	0.21 U	0.32 U	0.32 U	0.32 U	0.32 U	0.74 J	0.21 U	0.21 U
	Methylene chloride	2 U	1 U	1 U	1 U	1 U	2 UJ	2 U	2 U
	Naphthalene	1 U	1 U	**2.7** J	1 U	1 U	1 U	1 U	1 U
	Tetrachloroethene	0.25 U	0.22 U	0.22 U	0.22 U	0.22 U	0.44 U	0.25 U	0.25 U
	Trichloroethene	0.26 U	10.3	11.4	**47.3**	**39.5**	11.6	**42.1**	**53.4**
Perchlorate	Perchlorate	**100**	**110**	**95**	**110**	**81**	**78**	**79**	**73**
TPH	TPH-GRO (C6-C10)								
Metals, Dissolved	Arsenic	20 U	72 U	110 U	110 U	110 UJ	80 U	10 U	20 U
	Barium	50 U	100 U	100 U	100 U	100 U	200 U	40.3 J	50 U
	Cadmium	10 U	20 U	20 U	20 U	20 U	40 U	7.3 J	10 U
	Chromium	10 U	32 U	40 U	40 U	40 U	40 U	5 U	10 U
	Lead	10 U	40 U	40 U	40 U	40 U	40 U	20 U	20 U
	Mercury	0.05 U	0.14 U	0.15 U	0.15 UJ	0.15 U	0.071 U	0.05 U	0.05 U
	Selenium	61 B	91.4 J	78.2 J	125	82.3	128 J	85.1	118
	Silver	10 U	24 U	28 U	28 U	28 U	40 U	5 U	10 U
Metals, Total	Arsenic	20 U	72 U	110 U	110 U	110 UJ	80 U	20 U	20 U
	Barium	50 U	100 U	100 U	100 U	100 U	200 U	55.9 J	55.8 B
	Cadmium	10 U	20 U	20 U	20 U	20 U	40 U	10 U	10 U
	Chromium	10 U	32 U	40 U	40 U	40 U	40 U	33.5 J	10 U
	Lead	10 U	40 U	40 U	40 U	40 U	40 U	20 U	20 U
	Mercury	0.076 B	0.14 U	0.15 U	0.15 UJ	0.15 U	0.071 U	0.05 U	0.096 B
	Selenium	62.2 B	62 U	92.2 J	104	108	80 U	126	118
	Silver	10.8 B	24 U	28 U	28 U	28 U	40 U	5 U	10 U
Gen. Chem.	Solids, total dissolved	**114000**	**137000**	**134000**	**134000**	**105000**	**116000**	**120000**	**122000**

Table 4-3. Screening of Chemicals Detected in Groundwater (2008-2011) for Direct Contact and Vapor Intrusion Risk Site SS-39, Holloman AFB, New Mexico

		MW39-12 07/10/2008 N MW-39-12-071008	MW39-12 01/08/2009 N MW-39-12-010809	MW39-12 10/06/2009 N MW39-12-100609	MW39-12 01/06/2010 N MW39-12-010610	MW39-12 07/07/2010 N MW39-12-070710	MW39-12 01/27/2011 N MW39-12-012711	MW39-12 07/13/2011 N MW39-12-071311	MW39-13 01/28/2011 N MW39-13-012811
TestGroup	Parameter								
VOCs	1,1,1-Trichloroethane	0.33 U	0.33 U	0.33 U	0.33 U	0.22 U	0.2 U	0.2 U	0.4 U
	1,1,2-Trichloroethane	0.26 U	0.26 U	0.26 U	0.26 U	0.29 U	0.22 U	0.22 U	0.47 J
	1,1-Dichloroethene	0.54 U	0.54 U	0.54 U	0.54 U	0.29 U	0.23 U	0.23 U	8
	2-Butanone	2 U	3 J	2 U	5.4	2 U	3.3 J	2 U	4 U
	2-Hexanone	5 U	81.3 J	5 U	33.4	8.6 J	6.1 J	4 U	8 U
	4-Methyl-2-pentanone	2 U	2 U	2 U	2 U	2 U	2 U	2 U	4 U
	Acetone	10 U	15 J	10 U	26.1 J	10 UJ	19.3 J	10 U	20 U
	Benzene	0.4 U	0.4 U	0.4 U	0.4 U	0.21 U	0.2 U	0.2 U	0.4 U
	Bromomethane	0.78 U	0.78 U	0.78 U	0.85 J	0.78 U	0.5 U	0.5 U	1 U
	Carbon tetrachloride	0.22 U	0.22 U	0.22 U	0.22 U	0.34 U	0.25 U	0.25 U	0.5 U
	Chloroform	0.28 U	0.28 U	0.28 U	0.28 U	0.25 U	0.22 U	0.22 U	**3.1**
	Chloromethane	0.61 U	0.61 U	0.61 U	1.1 J	0.56 J	1.1 J	0.6 J	1 U
	Cis-1,2-dichloroethene	0.2 U	0.2 U	0.2 U	0.2 U	0.32 U	0.26 U	0.26 U	0.52 U
	Cymene	0.32 U	0.32 U	0.32 U	0.32 U	0.21 U	0.21 U	0.21 U	0.42 U
	Methylene chloride	1 U	1 U	1 U	1 U	2 UJ	2 U	2 U	4 U
	Naphthalene	1 U	1 J	1 U	1 U	1 U	1 U	1 U	2 U
	Tetrachloroethene	0.22 U	0.22 U	0.22 U	0.22 U	0.44 U	0.25 U	0.25 U	**1.6** J
	Trichloroethene	1.1	1.9	1.3	0.96 J	1.6	0.6 J	1.7	**132**
Perchlorate	Perchlorate	**78**	**93**	**76**	**51**	**66**	**61**	**78**	**28**
TPH	TPH-GRO (C6-C10)								86.4 J
Metals, Dissolved	Arsenic	72 U	110 U	**15.5**	110 UJ	80 U	20 U	20 U	**7.8** J
	Barium	100 U	100 U	49.4	100 U	200 U	51.4 J	50 U	11.3 J
	Cadmium	**30.5** J	20 U	2 U	20 U	40 U	10 U	10 U	1 U
	Chromium	32 U	40 U	4 U	40 U	40 U	7.4 J	10 U	2 U
	Lead	40 U	40 U	40 U	40 U	40 U	**26.4** J	20 U	1 U
	Mercury	0.14 U	0.15 U	0.15 U	0.15 U	0.071 U	0.05 U	0.05 U	0.05 U
	Selenium	62 U	118 J	98.8	71	98.1 J	97.6 J	104	13.5 J
	Silver	24 U	28 U	2.8 U	28 U	40 U	5 U	10 U	1 U
Metals, Total	Arsenic	72 U	110 U	**22.1**	110 UJ	80 U	10 U	20 U	**6** J
	Barium	107 J	100 U	47	100 U	200 U	59.1 J	50 U	17.7 J
	Cadmium	**38.2** J	20 U	2 U	20 U	40 U	5 U	10 U	1 U
	Chromium	32 U	40 U	4 U	40 U	40 U	97.4	10 U	2 U
	Lead	40 U	40 U	40 U	40 U	40 U	20 U	20 U	1 U
	Mercury	0.14 U	0.15 U	0.15 U	0.15 U	0.071 U	0.05 U	0.068 B	0.056 J
	Selenium	**186** J	95.7 J	95.4	72.2	90.2 J	62.9	133	20
	Silver	24 U	28 U	2.8 U	28 U	40 U	5 J	15.3 B	1 U
Gen. Chem.	Solids, total dissolved	**129000**	**143000**	**128000**	**98700**	**106000**	**133000**	**144000**	**12700**

Table 4-3. Screening of Chemicals Detected in Groundwater (2008-2011) for Direct Contact and Vapor Intrusion Risk Site SS-39, Holloman AFB, New Mexico

		MW39-13 07/13/2011 N MW39-13-071311	MW39-14 01/27/2011 N MW39-14-012711	MW39-14 01/27/2011 FD MW39-DUP02-012711	MW39-14 07/14/2011 N MW39-14-071411	MW39-14 07/14/2011 FD MW39-DUP02-071411	MW39-15 01/28/2011 N MW39-15-012811	MW39-15 07/13/2011 N MW39-15-071311	MW39-16 01/28/2011 N MW39-16-012811	MW39-16 07/14/2011 N MW39-16-071411
TestGroup	Parameter									
VOCs	1,1,1-Trichloroethane	0.2 U	0.2 U	0.2 U	0.2 U	0.2 U	0.2 U	0.2 U	0.2 U	0.2 U
	1,1,2-Trichloroethane	0.22 U	0.22 U	0.22 U	0.22 U	0.22 U	0.22 U	0.22 U	0.22 U	0.22 U
	1,1-Dichloroethene	10.8	0.23 U	0.23 U	0.23 U	0.23 U	0.23 U	0.23 U	0.57 J	0.65 J
	2-Butanone	2 U	2 U	2 U	2 U	2 U	2 U	2 U	2 U	2 U
	2-Hexanone	4 U	4 U	4 U	4 U	4 U	4 U	4 U	4 U	4 U
	4-Methyl-2-pentanone	2 U	2 U	2 U	2 U	2 U	2 U	2 U	2 U	2 U
	Acetone	10 U	10 UJ	10 UJ	10 U	10 U	10 U	10 U	10 U	10 U
	Benzene	0.2 U	0.2 U	0.2 U	0.2 U	0.2 U	0.2 U	0.2 U	0.2 U	0.2 U
	Bromomethane	0.5 U	0.5 U	0.5 U	0.5 U	0.5 U	0.5 U	0.5 U	0.5 U	0.5 U
	Carbon tetrachloride	0.25 U	**2.9**	**3.3**	**3.1**	**3.1**	0.33 J	0.43 J	0.78 J	1.1
	Chloroform	**4.5**	1.5	1.6	1.5	1.6	0.33 J	0.41 J	0.72 J	0.78 J
	Chloromethane	0.5 U	0.5 U	0.5 U	0.5 U	0.5 U	0.5 U	0.5 U	0.5 U	0.5 U
	Cis-1,2-dichloroethene	0.26 U	0.26 U	0.26 U	0.26 U	0.26 U	0.26 U	0.26 U	0.26 U	0.26 U
	Cymene	0.21 U	0.21 U	0.21 U	0.21 U	0.21 U	0.21 U	0.21 U	0.21 U	0.21 U
	Methylene chloride	2 U	2 U	2 U	2 U	2 U	2 U	2 U	2 U	2 U
	Naphthalene	1 U	1 U	1 U	1 U	1 U	1 U	1 U	1 U	1 U
	Tetrachloroethene	**2.3**	0.25 U	0.25 U	0.25 U	0.25 U	0.25 U	0.25 U	0.25 U	0.25 U
	Trichloroethene	**147**	9.3	10.7	9.1	8.7	8.3	8.2	**30.7**	**40.3**
Perchlorate	Perchlorate	**31**	11	11	11	11	7.3	6.7	13	11
TPH	TPH-GRO (C6-C10)		50 U	50 U			50 U		50 U	
Metals, Dissolved	Arsenic	**13.2** B	**3.2** J	**3.6** J	10 U	10 U	**4.2** J	**10** B	**6** J	10 U
	Barium	25 U	16.5 J	15.9 J	25 U	25 U	12 J	25 U	18.6 J	25 U
	Cadmium	5 U	1 U	1 U	5 U	5 U	1 U	5 U	1 U	5 U
	Chromium	5 U	5 U	5 U	5 U	5 U	2 U	5 U	2 U	5 U
	Lead	5 U	5 U	5 U	5 U	5 U	5 U	5 U	5 U	5 U
	Mercury	0.05 U	0.05 U	0.05 U	0.05 U	0.05 U	0.05 U	0.05 U	0.05 U	0.05 U
	Selenium	25.4 B	10 U	10 U	59	12.6 B	21	31.2 B	22	34.6 B
	Silver	5 U	1 U	1 U	5 U	5 U	1 U	5 U	1 U	5 U
Metals, Total	Arsenic	**21.4** B	**3.6** J	**3.6** J	10 U	10 U	**5.3** J	10 U	**6.4** J	10 U
	Barium	25 U	20.4 J	19 J	25 U	25 U	14 J	25 U	22.7 J	25 U
	Cadmium	5 U	1 U	1 U	5 U	5 U	1 U	5 U	1 U	5 U
	Chromium	5.3 B	5 U	5 U	5.7 B	5 U	2 U	5 U	2 U	5 U
	Lead	5 U	5 U	5 U	5 U	5 U	1 U	5 U	2 U	5 U
	Mercury	0.076 B	0.05 U	0.05 U	0.083 B	0.075 B	0.05 U	0.076 B	0.05 U	0.084 B
	Selenium	29.5 B	10 U	10 U	47.4 B	26 B	18.2 J	26.6 B	27.3	24.9 B
	Silver	5 U	1 U	1 U	5 U	5 U	1 U	5 U	1 U	5 U
Gen. Chem.	Solids, total dissolved	**17200**	**15800**	**15800**	**18400**	**19400**	**13100**	**20100**	**13600**	**25400**

Table 4-3. Screening of Chemicals Detected in Groundwater (2008-2011) for Direct Contact and Vapor Intrusion Risk Site SS-39, Holloman AFB, New Mexico

Notes:

All units are microgram per liter (µg/L), except Solids, total dissolved is milligrams per liter (mg/L).

(1) NMED Tapwater Screening Levels: NEW MEXICO ENVIRONMENT DEPARTMENT Hazardous Waste Bureau and Ground Water Quality Bureau Voluntary Remediation Program, Table A-1, TECHNICAL BACKGROUND DOCUMENT FOR DEVELOPMENT OF SOIL SCREENING LEVELS, REVISION 5.0, July 2009. Underline indicates EPA MCL.

(2) VI - EPA OSWER Draft Guidance for Evaluating the Vapor Intrusion to Indoor Air Pathway from Groundwater and Soils (Subsurface Vapor Intrusion Guidance) Table 2b November 2002

Bold result indicates analyte concentration exceeds Tapwater criteria.

Highlighted result indicates concentration exceeds EPA OSWER (2002) Vapor Intrusion 1E-5 risk level screening critiera for Groundwater to Indoor Air Pathway.

Not analyzed.

n/a = not applicable

QC Type: N - normal sample, FD - field duplicate sample

U = Analyte not detected above reporting detection limit shown.

J = Estimated quantity.

B = (Inorganic parameters) Analyte detected between method detection limit and reporting limit; quantity estimated.

R = Rejected

Table 4-4
Soil Exacavation Area Details
SS-39, Holloman Air Force Base

Excavation Location	Sample Locations	Pathways & Chemicals of Concern[a]	Excavation Dimensions, Approximate (feet/feet^2)	Depth, Approx. (feet)	Excavation Volume[b] (cu.yd.)
Sump (SWMU 177) Southwest of Bldg 1176	SB-39-01 SB-39-01R	DC: As VI: 1,1,1-trichloroethane, 1,1,2-trichloroehtane, 1,2-dichloroethane, chloromethane, methylene chloride, PCE, TCE	12 X 12 144	14	86
Sump (SWMU 177) South of Bldg 1176	SB-39-02 DPT-06 DPT-08	DC: PCE, TRPH VI: 1,1,1-trichloroethane, methylene chloride, PCE, TCE	12 X 12 144	14	86
Sump (SWMU 177) East of Bldg 1176	HA-39-04 HA-39-05	DC: TRPH, As VI: methylene chloride, PCE	12 X 12 144	14	86
Discharge Box (SWMU 179) at end of propellant spill pipe, SW of Alpha Pad	HA-39-02 HA-39-03	DC: TPH, As, Pb VI: methylene chloride	8 X 10 80	2	7
Concrete Collection Basin (SWMU 167) located on Alpha Pad	SD39-01	DC: Lead	3 X 15 45	0.5	1
South end of Oxidizer Spill Pipe, in drainage south of Alpha Pad	HA-39-01 HA-39-01R	DC: As VI: methylene chloride	10 X 10 100	2	8
Estimated Total Soil Excavation			**657 ft^2**	**--**	**274**

[a] DC - direct contact; VI - vapor intrusion. [b] Includes 15 percent expansion.

FIGURES

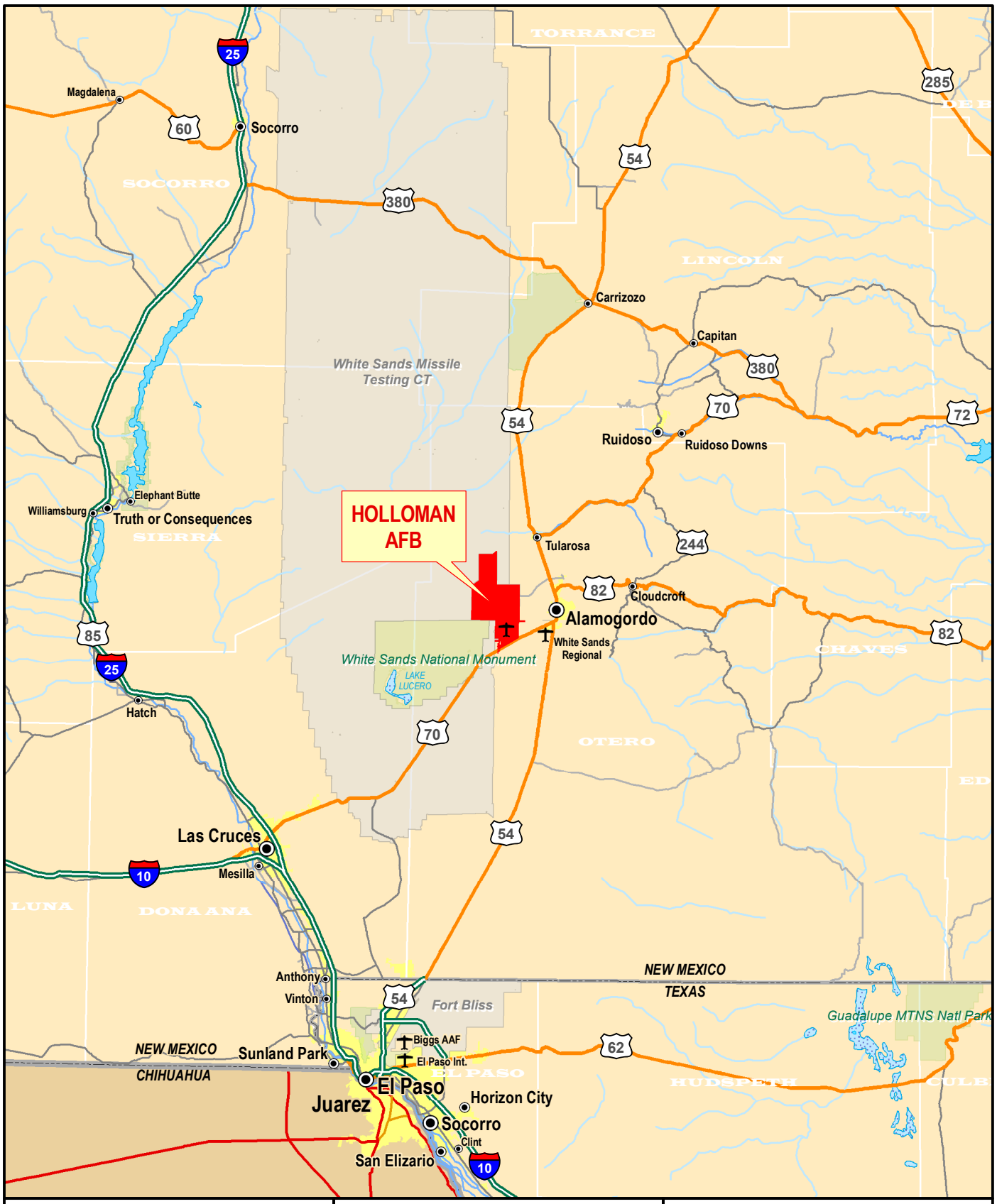

File: K:\GIS\Holloman\SS-39_ACM WorkPlan\
Fig1-1_HAFB LocMap.mxd
Accelerated Corrective Measures Work Plan Addendum
Revised: 11/23/2011
Map Source: Holloman AFB
State Plane Coordinate System, NAD83, NM Central, US Feet

TETRA TECH
OAK RIDGE, TN

N

0 10 20 40
Miles

FIGURE 1-1

HOLLOMAN AIR FORCE BASE INSTALLATION LOCATION ALAMAGORDO, NEW MEXICO

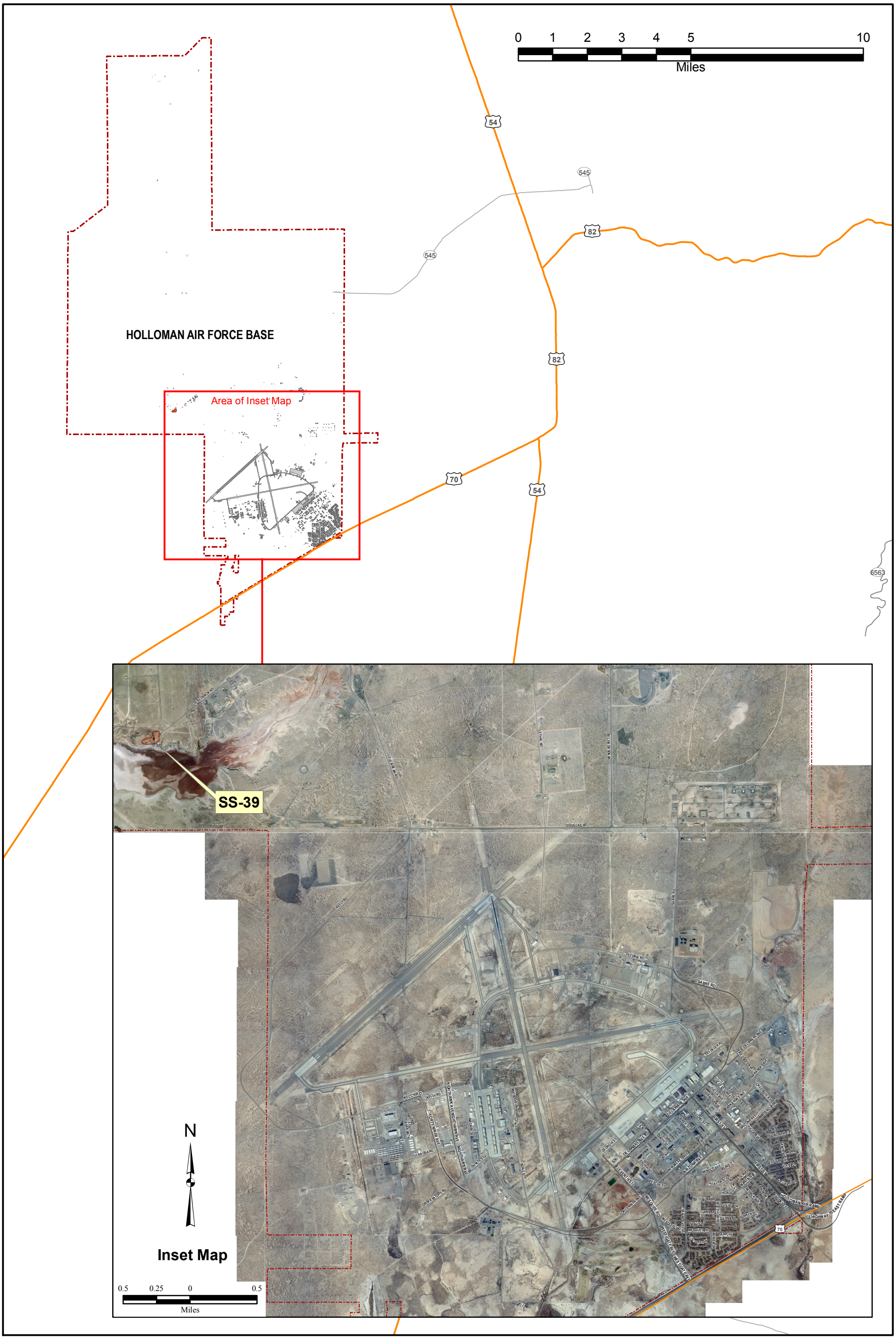

File: K:\GIS\Holloman\SS-39_ACM WorkPlan\Fig1-2_SS-39 LocMap.mxd
Accelerated Corrective Measures Work Plan Addendum
Revised: 11/23/2011
Map Source: Holloman AFB
State Plane Coordinate System, NAD83, NM Central, US Feet

TETRA TECH
OAK RIDGE, TN

LEGEND

- HIGHWAY
- AIRFIELD
- BASE BOUNDARY
- SS-39 SITE

FIGURE 1-2

SS-39 LOCATION AT HOLLOMAN AIR FORCE BASE

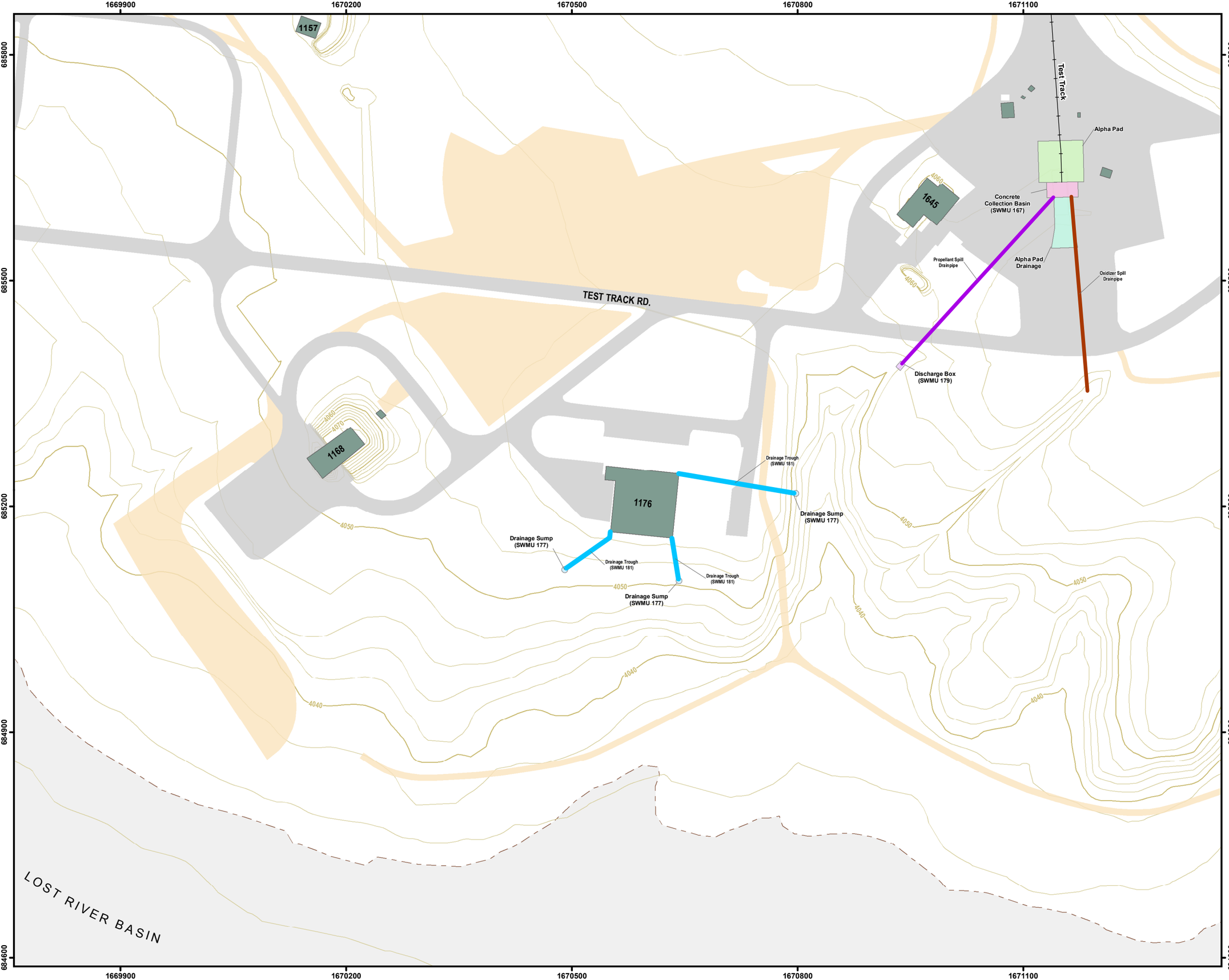

FILE: K:\GIS\Holloman\SS-39_ACM WorkPlan\
Fig1-3_SS-39 Site Features.mxd
REVISED: 11/23/2011
SOURCE: TETRA TECH

ALL COORDINATES PROJECTED IN NEW MEXICO STATE PLANE, CENTRAL ZONE FIPS 3002 IN FEET, AND THE HORIZONTAL DATUM IS NAD83 ADJUSTMENT OF 1996. THE VERTICAL REFERENCE DATUM IS NAVD88.

LEGEND

- Drainage Trough (SWMU 181)
- Oxidizer Spill Drainpipe
- Propellant Spill Drainpipe
- Alpha Pad
- Alpha Pad Drainage
- Concrete Collection Basin (SWMU 167)
- Discharge Box (SWMU 179)
- Drainage Sump (SWMU 177)
- HOLLOMAN AFB BUILDING
- ROAD/PARKING (PAVED)
- ROAD/PARKING (UNPAVED)
- TEST TRACK
- INDEX CONTOUR (10')
- INTERVAL CONTOUR (2')
- WETLAND AREA

N

0 60 120 240
FEET

ACCELERATED CORRECTIVE MEASURES
WORK PLAN ADDENDUM
HOLLOMAN AIR FORCE BASE
ALAMOGORDO, NEW MEXICO

TETRA TECH
OAK RIDGE, TENNESSEE

FIGURE 1-3

SS-39 SITE FEATURES

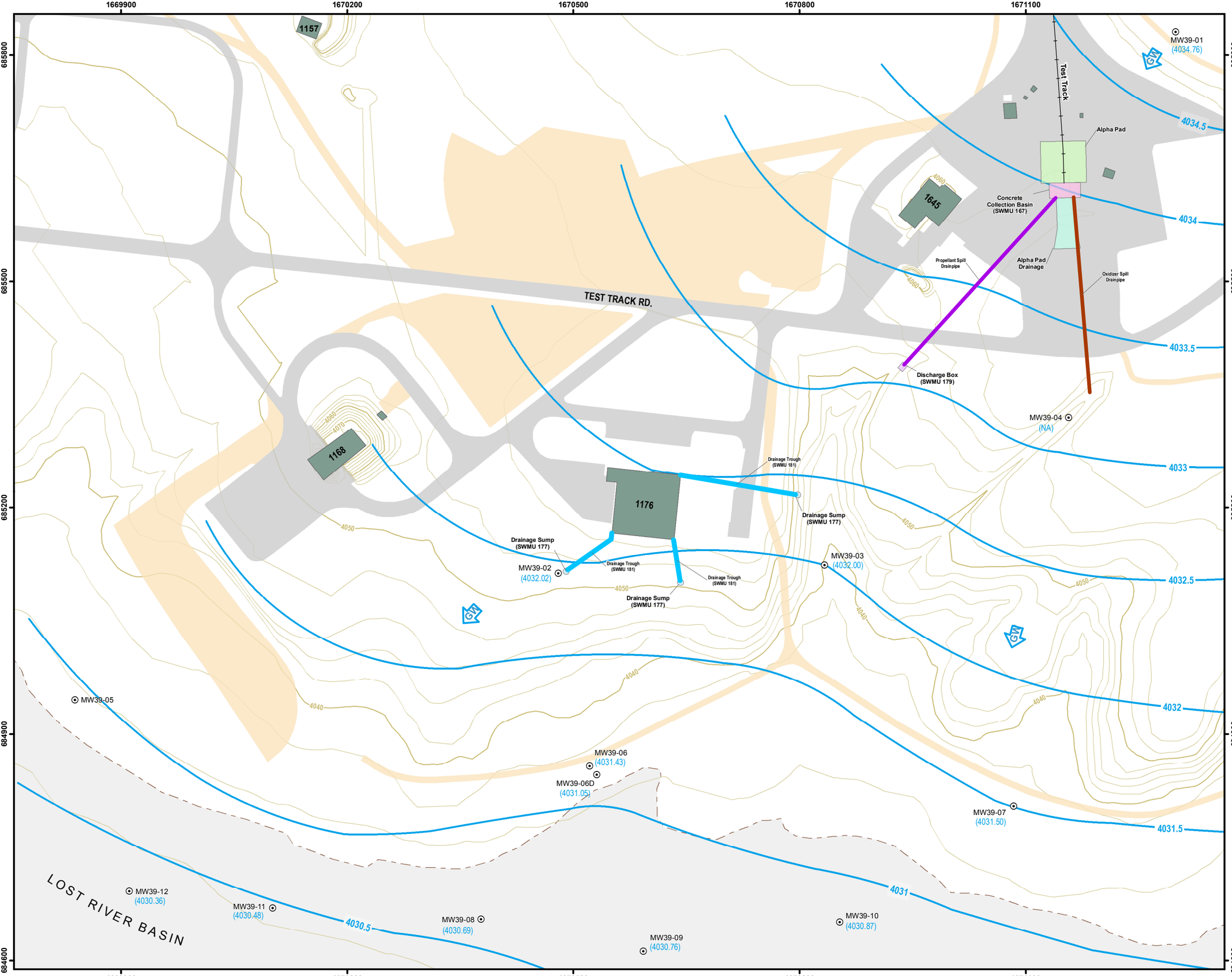

FILE: K:\GIS\Holloman\SS-39_ACM WorkPlan\
Fig2-1_SS-39 GW Potentio2010.mxd
REVISED: 11/23/2011
SOURCE: TETRA TECH

ALL COORDINATES PROJECTED IN NEW MEXICO STATE PLANE, CENTRAL ZONE FIPS 3002 IN FEET, AND THE HORIZONTAL DATUM IS NAD83 ADJUSTMENT OF 1996. THE VERTICAL REFERENCE DATUM IS NAVD88.

LEGEND

- GROUNDWATER CONTOUR
- MONITORING WELL
- Drainage Trough (SWMU 181)
- Oxidizer Spill Drainpipe
- Propellant Spill Drainpipe
- Alpha Pad
- Alpha Pad Drainage
- Concrete Collection Basin (SWMU 167)
- Discharge Box (SWMU 179)
- Drainage Sump (SWMU 177)
- HOLLOMAN AFB BUILDING
- ROAD/PARKING (PAVED)
- ROAD/PARKING (UNPAVED)
- TEST TRACK
- INDEX CONTOUR (10')
- INTERVAL CONTOUR (2')
- WETLAND AREA

Notes:
1. Groundwater elevations in feet above mean sea level (ft AMSL).

N

0 60 120 240
FEET

ACCELERATED CORRECTIVE MEASURES
WORK PLAN ADDENDUM
HOLLOMAN AIR FORCE BASE
ALAMOGORDO, NEW MEXICO

TETRA TECH
OAK RIDGE, TENNESSEE

FIGURE 2-1

GROUNDWATER POTENTIOMETRIC SURFACE AT SS-39 (JULY 2010)

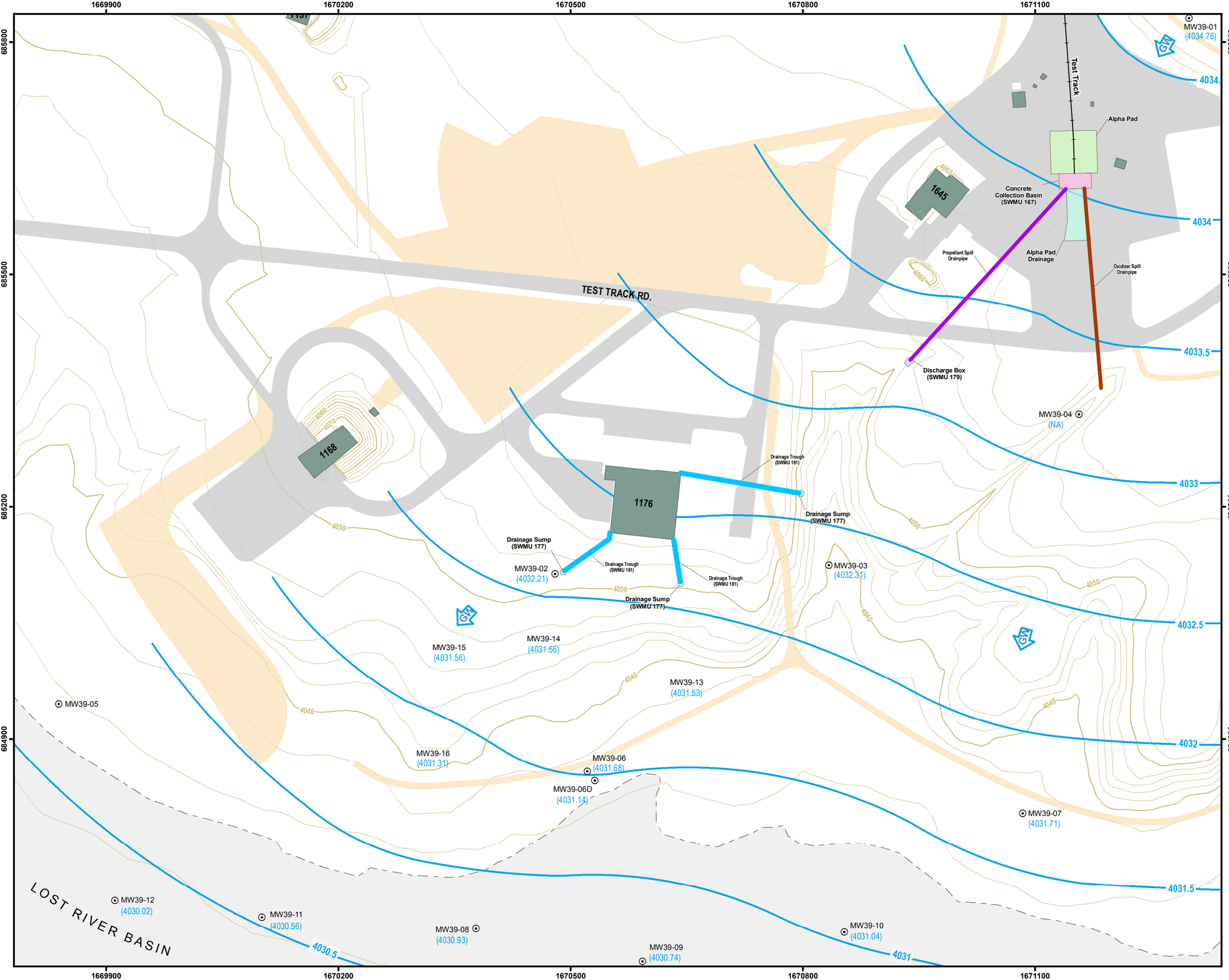

FILE: K:\GIS\Holloman\SS-39_ACM WorkPlan\
Fig2-2_SS-39 GW Potentio2011.mxd
REVISED: 11/23/2011
SOURCE: TETRA TECH

ALL COORDINATES PROJECTED IN NEW MEXICO STATE PLANE, CENTRAL ZONE FIPS 3002 IN FEET, AND THE HORIZONTAL DATUM IS NAD83 ADJUSTMENT OF 1996. THE VERTICAL REFERENCE DATUM IS NAVD88.

LEGEND

- GROUNDWATER CONTOUR
- MONITORING WELL
- Drainage Trough (SWMU 181)
- Oxidizer Spill Drainpipe
- Propellant Spill Drainpipe
- Alpha Pad
- Alpha Pad Drainage
- Concrete Collection Basin (SWMU 167)
- Discharge Box (SWMU 179)
- Drainage Sump (SWMU 177)
- HOLLOMAN AFB BUILDING
- ROAD/PARKING (PAVED)
- ROAD/PARKING (UNPAVED)
- TEST TRACK
- INDEX CONTOUR (10')
- INTERVAL CONTOUR (2')
- WETLAND AREA

Notes:
1. Groundwater elevations in feet above mean sea level (ft AMSL).

N

0 60 120 240
FEET

ACCELERATED CORRECTIVE MEASURES
WORK PLAN ADDENDUM
HOLLOMAN AIR FORCE BASE
ALAMOGORDO, NEW MEXICO

TETRA TECH
OAK RIDGE, TENNESSEE

FIGURE 2-2

GROUNDWATER POTENTIOMETRIC SURFACE AT SS-39 (JANUARY 2011)

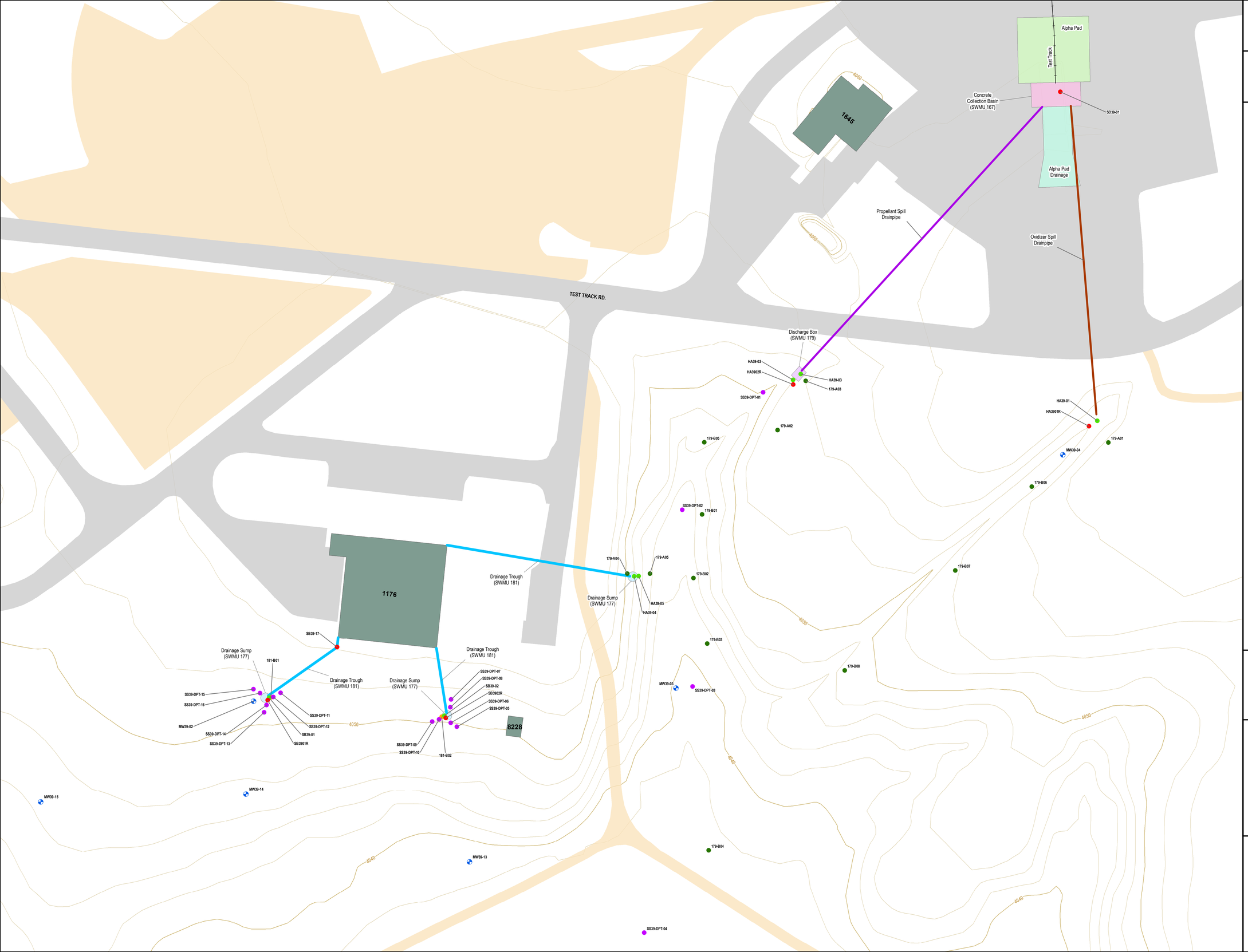

GIS FILENAME: K:\GIS\Holloman\SS-39_ACM WorkPlan\Fig3-1_SS-39 SL Locs.mxd
DATE: 11-23-2011
SOURCE: TETRA TECH

ALL COORDINATES PROJECTED IN NEW MEXICO STATE PLANE, CENTRAL ZONE FIPS 3002 IN FEET, AND THE HORIZONTAL DATUM IS NAD83 ADJUSTMENT OF 1996. THE VERTICAL REFERENCE DATUM IS NAVD88.

LEGEND

- Soil Sample: ACM (2010)
- Soil Sample: PHASE I (1991)
- Soil Sample: PHASE II (1993)
- Soil Sample: PHASE II (1994)
- Soil Sample: Supp. RFI (2006)
- Monitoring Well
- TEST TRACK
- Drainage Trough (SWMU 181)
- Oxidizer Spill Drainpipe
- Propellant Spill Drainpipe
- Alpha Pad
- Alpha Pad Drainage
- Concrete Collection Basin (SWMU 167)
- Discharge Box (SWMU 179)
- Drainage Sump (SWMU 177)
- HOLLOMAN AFB BUILDING
- ROAD/PARKING (PAVED)
- ROAD/PARKING (UNPAVED)
- INDEX CONTOUR (10')
- INTERVAL CONTOUR (2')

Note:
1) Monitoring well locations shown for reference.

N

0 20 40 80 120 160
FEET

ACCELERATED CORRECTIVE MEASURES
WORK PLAN ADDENDUM
HOLLOMAN AIR FORCE BASE
ALAMOGORDO, NEW MEXICO

TETRA TECH
OAK RIDGE, TENNESSEE

FIGURE 3-1

SOIL SAMPLE LOCATIONS AT SS-39

GIS FILENAME: K:\GIS\Holloman\SS-39_ACM WorkPlan\
Fig3-2_SS-39 GW Locs.mxd
DATE: 11-23-2011
SOURCE: TETRA TECH

ALL COORDINATES PROJECTED IN NEW MEXICO STATE PLANE, CENTRAL ZONE FIPS 3002 IN FEET, AND THE HORIZONTAL DATUM IS NAD83 ADJUSTMENT OF 1996. THE VERTICAL REFERENCE DATUM IS NAVD88.

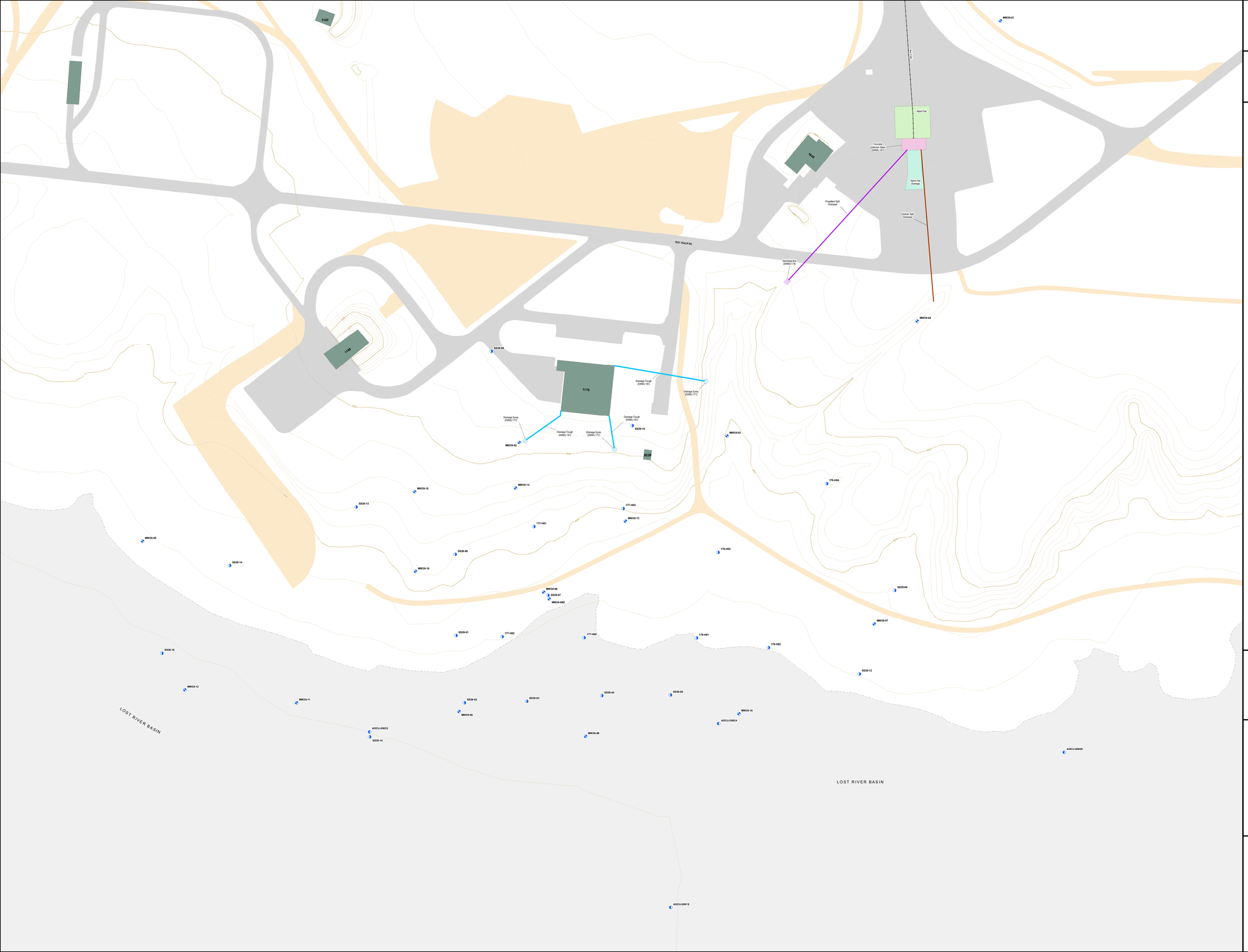

LEGEND

- Monitoring Well
- Non-Monitoring Well (1993, 1998)
- Non-Monitoring Well (AOC-U, 2011)
- Drainage Trough (SWMU 181)
- Oxidizer Spill Drainpipe
- Propellant Spill Drainpipe
- Alpha Pad
- Alpha Pad Drainage
- Concrete Collection Basin (SWMU 167)
- Discharge Box (SWMU 179)
- Drainage Sump (SWMU 177)
- HOLLOMAN AFB BUILDING
- ROAD/PARKING (PAVED)
- ROAD/PARKING (UNPAVED)
- TEST TRACK
- WETLAND AREA
- INDEX CONTOUR (10')
- INTERVAL CONTOUR (2')

N

0 75 150 225 300
FEET

ACCELERATED CORRECTIVE MEASURES
WORK PLAN ADDENDUM
HOLLOMAN AIR FORCE BASE
ALAMOGORDO, NEW MEXICO

TETRA TECH
OAK RIDGE, TENNESSEE

FIGURE 3-2

GROUNDWATER SAMPLE LOCATIONS AT SS-39

3

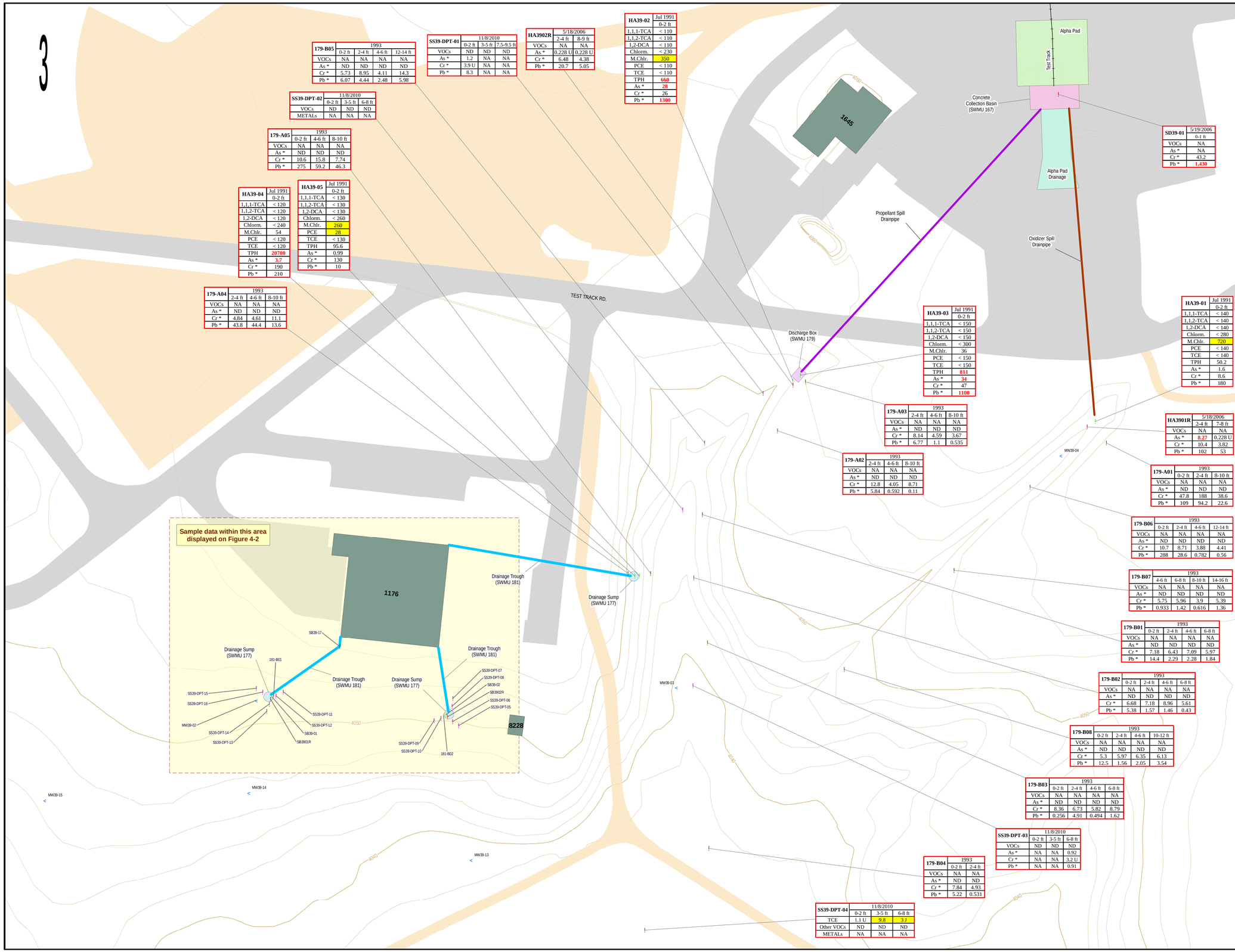

179-B05	1993			
	0-2 ft	2-4 ft	4-6 ft	12-14 ft
VOCs	NA	NA	NA	NA
As *	ND	ND	ND	ND
Cr *	5.73	8.95	4.11	14.3
Pb *	6.07	4.44	2.48	5.98

SS39-DPT-01	11/8/2010		
	0-2 ft	3-5 ft	7.5-9.5 ft
VOCs	ND	ND	ND
As *	1.2	NA	NA
Cr *	3.9 U	NA	NA
Pb *	8.3	NA	NA

HA3902R	5/18/2006	
	2-4 ft	8-9 ft
VOCs	NA	NA
As *	0.228 U	0.228 U
Cr *	6.48	4.38
Pb *	20.7	5.05

HA39-02	Jul 1991
	0-2 ft
1,1,1-TCA	< 110
1,1,2-TCA	< 110
1,2-DCA	< 110
Chlorm.	< 230
M.Chlr.	350
PCE	< 110
TCE	< 110
TPH	660
As *	28
Cr *	26
Pb *	1300

SS39-DPT-02	11/8/2010		
	0-2 ft	3-5 ft	6-8 ft
VOCs	ND	ND	ND
METALs	NA	NA	NA

179-A05	1993		
	0-2 ft	4-6 ft	8-10 ft
VOCs	NA	NA	NA
As *	ND	ND	ND
Cr *	10.6	15.8	7.74
Pb *	275	59.2	46.3

HA39-04	Jul 1991
	0-2 ft
1,1,1-TCA	< 120
1,1,2-TCA	< 120
1,2-DCA	< 120
Chlorm.	< 240
M.Chlr.	54
PCE	< 120
TCE	< 120
TPH	20700
As *	3.7
Cr *	190
Pb *	210

HA39-05	Jul 1991
	0-2 ft
1,1,1-TCA	< 130
1,1,2-TCA	< 130
1,2-DCA	< 130
Chlorm.	< 260
M.Chlr.	260
PCE	28
TCE	< 130
TPH	95.6
As *	0.99
Cr *	130
Pb *	10

179-A04	1993		
	2-4 ft	4-6 ft	8-10 ft
VOCs	NA	NA	NA
As *	ND	ND	ND
Cr *	4.84	4.61	11.1
Pb *	43.8	44.4	13.6

SD39-01	5/19/2006
	0-1 ft
VOCs	NA
As *	NA
Cr *	43.2
Pb *	1,430

HA39-03	Jul 1991
	0-2 ft
1,1,1-TCA	< 150
1,1,2-TCA	< 150
1,2-DCA	< 150
Chlorm.	< 300
M.Chlr.	36
PCE	< 150
TCE	< 150
TPH	811
As *	34
Cr *	47
Pb *	1100

HA39-01	Jul 1991
	0-2 ft
1,1,1-TCA	< 140
1,1,2-TCA	< 140
1,2-DCA	< 140
Chlorm.	< 280
M.Chlr.	720
PCE	< 140
TCE	< 140
TPH	50.2
As *	1.6
Cr *	8.6
Pb *	180

179-A03	1993		
	2-4 ft	4-6 ft	8-10 ft
VOCs	NA	NA	NA
As *	ND	ND	ND
Cr *	8.14	4.59	3.67
Pb *	6.77	1.1	0.535

HA3901R	5/18/2006	
	2-4 ft	7-8 ft
VOCs	NA	NA
As *	8.27	0.228 U
Cr *	10.4	3.82
Pb *	102	53

179-A02	1993		
	2-4 ft	4-6 ft	8-10 ft
VOCs	NA	NA	NA
As *	ND	ND	ND
Cr *	12.8	4.05	8.71
Pb *	5.84	0.592	0.11

179-A01	1993		
	0-2 ft	2-4 ft	8-10 ft
VOCs	NA	NA	NA
As *	ND	ND	ND
Cr *	47.8	188	38.6
Pb *	109	94.2	22.6

179-B06	1993			
	0-2 ft	2-4 ft	4-6 ft	12-14 ft
VOCs	NA	NA	NA	NA
As *	ND	ND	ND	ND
Cr *	10.7	8.71	3.88	4.41
Pb *	288	28.6	0.782	0.56

179-B07	1993			
	4-6 ft	6-8 ft	8-10 ft	14-16 ft
VOCs	NA	NA	NA	NA
As *	ND	ND	ND	ND
Cr *	5.75	5.96	3.9	5.39
Pb *	0.933	1.42	0.616	1.36

179-B01	1993			
	0-2 ft	2-4 ft	4-6 ft	6-8 ft
VOCs	NA	NA	NA	NA
As *	ND	ND	ND	ND
Cr *	7.18	6.43	7.09	5.97
Pb *	14.4	2.29	2.28	1.84

179-B02	1993			
	0-2 ft	2-4 ft	4-6 ft	6-8 ft
VOCs	NA	NA	NA	NA
As *	ND	ND	ND	ND
Cr *	6.68	7.18	8.96	5.61
Pb *	5.38	1.57	1.46	0.43

179-B08	1993			
	0-2 ft	2-4 ft	4-6 ft	10-12 ft
VOCs	NA	NA	NA	NA
As *	ND	ND	ND	ND
Cr *	5.3	5.97	6.35	6.13
Pb *	12.5	1.56	2.05	3.54

179-B03	1993			
	0-2 ft	2-4 ft	4-6 ft	6-8 ft
VOCs	NA	NA	NA	NA
As *	ND	ND	ND	ND
Cr *	8.36	6.73	5.82	8.79
Pb *	0.256	4.91	0.494	1.62

SS39-DPT-03	11/8/2010		
	0-2 ft	3-5 ft	6-8 ft
VOCs	ND	ND	ND
As *	NA	NA	0.92
Cr *	NA	NA	3.2 U
Pb *	NA	NA	0.91

179-B04	1993	
	0-2 ft	2-4 ft
VOCs	NA	NA
As *	ND	ND
Cr *	7.84	4.93
Pb *	5.22	0.531

SS39-DPT-04	11/8/2010		
	0-2 ft	3-5 ft	6-8 ft
TCE	1.1 U	9.8	3 J
Other VOCs	ND	ND	ND
METALs	NA	NA	NA

GIS FILENAME: K:\GIS\Holloman\SS-39_ACM WorkPlan\ Fig4-1_SS-39 SL Exceeds.mxd
DATE: 11-23-2011
SOURCE: TETRA TECH

ALL COORDINATES PROJECTED IN NEW MEXICO STATE PLANE, CENTRAL ZONE FIPS 3002 IN FEET, AND THE HORIZONTAL DATUM IS NAD83 ADJUSTMENT OF 1996. THE VERTICAL REFERENCE DATUM IS NAVD88.

LEGEND

- Soil Sample: PHASE I (1991)
- Soil Sample: PHASE II (1993)
- Soil Sample: Supp. RFI (1994)
- Soil Sample: Supp. RFI (2006)
- Soil Sample: ACM (2010)
- Monitoring Well
- Drainage Trough (SWMU 181)
- Oxidizer Spill Drainpipe
- Propellant Spill Drainpipe
- Alpha Pad
- Alpha Pad Drainage
- Concrete Collection Basin (SWMU 167)
- Discharge Box (SWMU 179)
- Drainage Sump (SWMU 177)
- HOLLOMAN AFB BUILDING
- ROAD/PARKING (PAVED)
- ROAD/PARKING (UNPAVED)
- TEST TRACK
- INDEX CONTOUR (10')
- INTERVAL CONTOUR (2')
- Data Display Area of Figure 4-2

Note:
1) Monitoring well locations shown for reference.
2) Sample depths listed are below ground surface (bgs).
3) Results: Organics in µg/kg, Metals (indicated with *) and TPH in mg/kg.
NA = not analyzed, ND = not detected, SSL = Soil Screening Level.
Values in RED exceed the Direct Contact Residential SSL.
Values highlighted YELLOW exceed the Vapor Intrusion Residential SSL.

Chemical	Abbr.	Residential SSLs	
		Direct Contact	Vapor Intrusion
Organics µg/kg			
1,1,1-Trichloroethane	1,1,1-TCA	21,800,000	5,814
1,1,2-Trichloroethane	1,1,2-TCA	17,200	56
1,2-Dichloroethane	1,2-DCA	7,740	11
Chloromethane	Chlorm.	35,600	33
Methylene Chloride	M.Chlr.	199,000	254
Tetrachloroethene	PCE	6,990	13
Trichloroethene	TCE	45,700	1.1
TPH and Metals mg/kg			
Total Petroleum Hydrocarbons	TPH	760	--
Arsenic	As	3.59	--
Chromium	Cr	219	--
Lead	Pb	400	--

0 20 40 80 120 160
FEET

ACCELERATED CORRECTIVE MEASURES
WORK PLAN ADDENDUM
HOLLOMAN AIR FORCE BASE
ALAMOGORDO, NEW MEXICO

TETRA TECH
OAK RIDGE, TENNESSEE

FIGURE 4-1

CHEMICALS IN SOIL EXCEEDING RESIDENTIAL SOIL SCREENING LEVELS

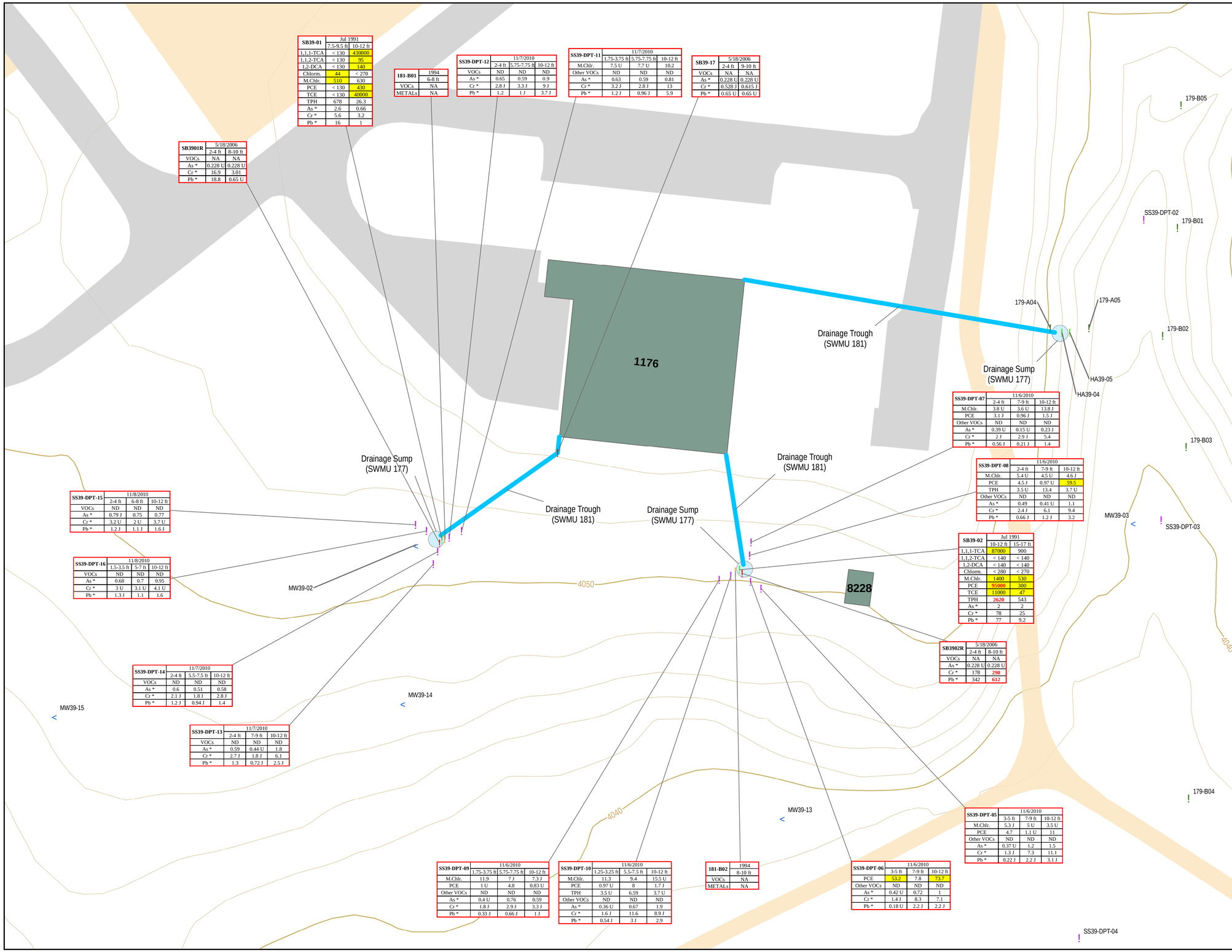

SB39-01	Jul 1991	
	7.5-9.5 ft	10-12 ft
1,1,1-TCA	< 130	430000
1,1,2-TCA	< 130	95
1,2-DCA	< 130	140
Chlorm.	44	< 270
M.Chlr.	510	630
PCE	< 130	430
TCE	< 130	40000
TPH	678	26.3
As *	2.6	0.66
Cr *	5.6	3.2
Pb *	16	1

181-B01	1994
	6-8 ft
VOCs	NA
METALs	NA

SS39-DPT-12	11/7/2010		
	2-4 ft	5.75-7.75 ft	10-12 ft
VOCs	ND	ND	ND
As *	0.65	0.59	0.9
Cr *	2.8 J	3.3 J	9 J
Pb *	1.2	1 J	3.7 J

SS39-DPT-11	11/7/2010		
	1.75-3.75 ft	5.75-7.75 ft	10-12 ft
M.Chlr.	7.5 U	7.7 U	10.2
Other VOCs	ND	ND	ND
As *	0.63	0.59	0.81
Cr *	3.2 J	2.8 J	13
Pb *	1.2 J	0.96 J	5.9

SB39-17	5/18/2006	
	2-4 ft	9-10 ft
VOCs	NA	NA
As *	0.228 U	0.228 U
Cr *	0.528 J	0.615 J
Pb *	0.65 U	0.65 U

SB3901R	5/18/2006	
	2-4 ft	8-10 ft
VOCs	NA	NA
As *	0.228 U	0.228 U
Cr *	16.9	3.01
Pb *	18.8	0.65 U

SS39-DPT-07	11/6/2010		
	2-4 ft	7-9 ft	10-12 ft
M.Chlr.	3.8 U	3.6 U	13.8 J
PCE	3.1 J	0.96 J	1.5 J
Other VOCs	ND	ND	ND
As *	0.39 U	0.15 U	0.23 J
Cr *	2 J	2.9 J	5.4
Pb *	0.56 J	0.21 J	1.4

SS39-DPT-08	11/6/2010		
	2-4 ft	7-9 ft	10-12 ft
M.Chlr.	5.4 U	4.5 U	4.6 J
PCE	4.5 J	0.97 U	59.5
TPH	3.5 U	13.4	3.7 U
Other VOCs	ND	ND	ND
As *	0.49	0.41 U	1.1
Cr *	2.4 J	6.1	9.4
Pb *	0.66 J	1.2 J	3.2

SS39-DPT-15	11/8/2010		
	2-4 ft	6-8 ft	10-12 ft
VOCs	ND	ND	ND
As *	0.79 J	0.75	0.77
Cr *	3.2 U	2 U	3.7 U
Pb *	1.2 J	1.1 J	1.6 J

SS39-DPT-16	11/8/2010		
	1.5-3.5 ft	5-7 ft	10-12 ft
VOCs	ND	ND	ND
As *	0.68	0.7	0.95
Cr *	3 U	3.1 U	4.1 U
Pb *	1.3 J	1.1	1.6

SB39-02	Jul 1991	
	10-12 ft	15-17 ft
1,1,1-TCA	87000	900
1,1,2-TCA	< 140	< 140
1,2-DCA	< 140	< 140
Chlorm.	< 280	< 270
M.Chlr.	1480	530
PCE	95000	300
TCE	11000	47
TPH	2620	543
As *	2	2
Cr *	78	25
Pb *	77	9.2

SB3902R	5/18/2006	
	2-4 ft	8-10 ft
VOCs	NA	NA
As *	0.228 U	0.228 U
Cr *	178	290
Pb *	342	612

SS39-DPT-14	11/7/2010		
	2-4 ft	5.5-7.5 ft	10-12 ft
VOCs	ND	ND	ND
As *	0.6	0.51	0.58
Cr *	2.1 J	1.8 J	2.8 J
Pb *	1.2 J	0.94 J	1.4

SS39-DPT-13	11/7/2010		
	2-4 ft	7-9 ft	10-12 ft
VOCs	ND	ND	ND
As *	0.59	0.44 U	1.8
Cr *	2.7 J	1.8 J	6.1
Pb *	1.3	0.72 J	2.5 J

SS39-DPT-05	11/6/2010		
	3-5 ft	7-9 ft	10-12 ft
M.Chlr.	5.3 J	5 U	3.5 U
PCE	4.7	1.1 U	11
Other VOCs	ND	ND	ND
As *	0.37 U	1.2	1.5
Cr *	1.3 J	7.3	11.1
Pb *	0.22 J	2.2 J	3.1 J

SS39-DPT-09	11/6/2010		
	1.75-3.75 ft	5.75-7.75 ft	10-12 ft
M.Chlr.	11.9	7 J	7.3 J
PCE	1 U	4.8	0.83 U
Other VOCs	ND	ND	ND
As *	0.4 U	0.76	0.59
Cr *	1.8 J	2.9 J	3.3 J
Pb *	0.33 J	0.66 J	1 J

SS39-DPT-10	11/6/2010		
	1.25-3.25 ft	5.5-7.5 ft	10-12 ft
M.Chlr.	11.3	9.4	15.5 U
PCE	0.97 U	8	1.7 J
TPH	3.5 U	6.59	3.7 U
Other VOCs	ND	ND	ND
As *	0.36 U	0.67	1.9
Cr *	1.6 J	11.6	8.9 J
Pb *	0.54 J	3 J	2.9

181-B02	1994
	8-10 ft
VOCs	NA
METALs	NA

SS39-DPT-06	11/6/2010		
	3-5 ft	7-9 ft	10-12 ft
PCE	53.2	7.8	73.7
Other VOCs	ND	ND	ND
As *	0.42 U	0.72	1
Cr *	1.4 J	8.3	7.1
Pb *	0.18 U	2.2 J	2.2 J

GIS FILENAME: K:\GIS\Holloman\SS-39_ACM WorkPlan\ Fig4-2_SS-39 SL Exceeds_Bldg1176.mxd
DATE: 11-23-2011
SOURCE: TETRA TECH

ALL COORDINATES PROJECTED IN NEW MEXICO STATE PLANE, CENTRAL ZONE FIPS 3002 IN FEET, AND THE HORIZONTAL DATUM IS NAD83 ADJUSTMENT OF 1996. THE VERTICAL REFERENCE DATUM IS NAVD88.

LEGEND

- Soil Sample: PHASE I (1991)
- Soil Sample: PHASE II (1993)
- Soil Sample: Supp. RFI (1994)
- Soil Sample: Supp. RFI (2006)
- Soil Sample: ACM (2010)
- Monitoring Well
- Drainage Trough (SWMU 181)
- Drainage Sump (SWMU 177)
- HOLLOMAN AFB BUILDING
- ROAD/PARKING (PAVED)
- ROAD/PARKING (UNPAVED)
- INDEX CONTOUR (10')
- INTERVAL CONTOUR (2')

Note:
1) Monitoring well locations shown for reference.
2) Sample depths listed are below ground surface (bgs).
3) Results: Organics in µg/kg, Metals (indicated with *) and TPH in mg/kg.
NA = not analyzed, ND = not detected, SSL = Soil Screening Level.
Values in RED exceed the Direct Contact Residential SSL.
Values highlighted YELLOW exceed the Vapor Intrusion Residential SSL.

Chemical	Abbr.	Residential SSLs	
		Direct Contact	Vapor Intrusion
Organics µg/kg			
1,1,1-Trichloroethane	1,1,1-TCA	21,800,000	5,814
1,1,2-Trichloroethane	1,1,2-TCA	17,200	56
1,2-Dichloroethane	1,2-DCA	7,740	11
Chloromethane	Chlorm.	35,600	33
Methylene Chloride	M.Chlr.	199,000	254
Tetrachloroethene	PCE	6,990	13
Trichloroethene	TCE	45,700	1.1
TPH and Metals mg/kg			
Total Petroleum Hydrocarbons	TPH	760	--
Arsenic	As	3.59	--
Chromium	Cr	219	--
Lead	Pb	400	--

3

0 10 20 40 60 80
FEET

ACCELERATED CORRECTIVE MEASURES
WORK PLAN ADDENDUM
HOLLOMAN AIR FORCE BASE
ALAMOGORDO, NEW MEXICO

TETRA TECH
OAK RIDGE, TENNESSEE

FIGURE 4-2

CHEMICALS IN SOIL EXCEEDING RESIDENTIAL SOIL SCREENING LEVELS (SOUTH OF BUILDING 1176)

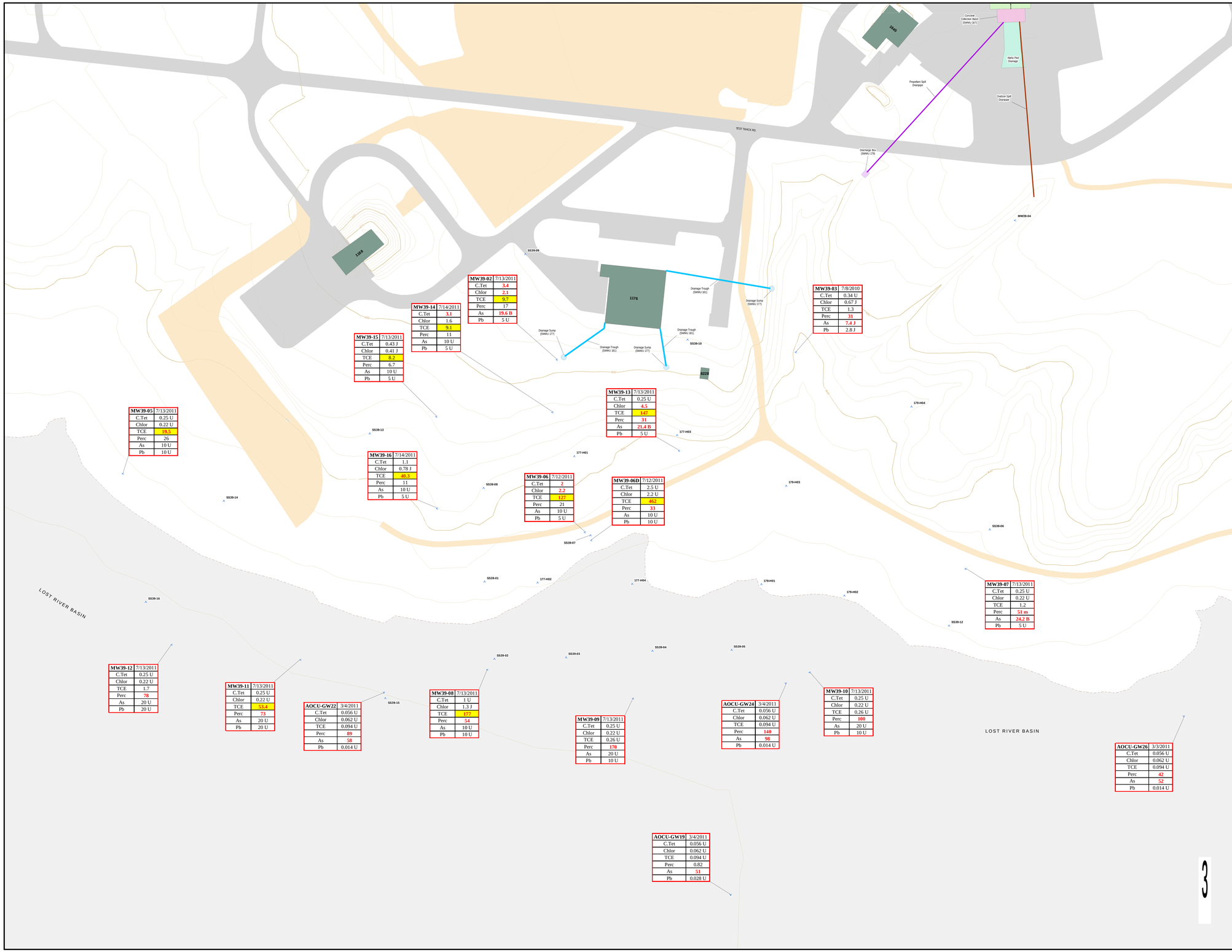

GIS FILENAME: K:\GIS\Holloman\SS-39_ACM WorkPlan\Fig4-3_SS-39 GW Exceeds.mxd
DATE: 11-23-2011
SOURCE: TETRA TECH

ALL COORDINATES PROJECTED IN NEW MEXICO STATE PLANE, CENTRAL ZONE FIPS 3002 IN FEET, AND THE HORIZONTAL DATUM IS NAD83 ADJUSTMENT OF 1996. THE VERTICAL REFERENCE DATUM IS NAVD88.

LEGEND

- < Monitoring Well
- ^ Non-Monitoring Well (1993, 1998)
- v Non-Monitoring Well (AOC-U)
- Drainage Trough (SWMU 181)
- Oxidizer Spill Drainpipe
- Propellant Spill Drainpipe
- Alpha Pad
- Alpha Pad Drainage
- Concrete Collection Basin (SWMU 167)
- Discharge Box (SWMU 179)
- Drainage Sump (SWMU 177)
- HOLLOMAN AFB BUILDING
- ROAD/PARKING (PAVED)
- ROAD/PARKING (UNPAVED)
- TEST TRACK
- WETLAND AREA
- INDEX CONTOUR (10')
- INTERVAL CONTOUR (2')

Note:
1) Results in µg/L:
Values in RED exceed the Tap Water Residential Screening Level
Values highlighted YELLOW exceed the Vapor Intrusion Residential Screening Level
2) Lab Qualifiers:
B = analyte present in associated laboratory blank
J = estimated as a non-detect at the detection limit
m = recoveries not accurately calculated; corrective action unnecessary
U = not detected

Chemical	Abbrev.	Screening Levels	
		Tap Water	Vapor
Organics µg/L			
Carbon tetrachloride	C.Tet	1.99	5
Chloroform	Chlor	1.93	80
Trichloroethene	TCE	16.5	5
Total Metals & Ions µg/L			
Arsenic	As	0.448	--
Lead	Pb	15	--
Perchlorate	Perc	26	--

0 75 150 225 300
FEET

ACCELERATED CORRECTIVE MEASURES
WORK PLAN ADDENDUM
HOLLOMAN AIR FORCE BASE
ALAMOGORDO, NEW MEXICO

TETRA TECH
OAK RIDGE, TENNESSEE

FIGURE 4-3

CHEMICALS IN GROUNDWATER EXCEEDING RESIDENTIAL SCREENING LEVELS

GIS FILENAME: K:\GIS\Holloman\SS-39_ACM WorkPlan\
Fig4-4_SS-39 SL Contam_SWMU177.mxd
DATE: 11-23-2011
SOURCE: TETRA TECH

ALL COORDINATES PROJECTED IN NEW MEXICO STATE PLANE, CENTRAL ZONE FIPS 3002 IN FEET, AND THE HORIZONTAL DATUM IS NAD83 ADJUSTMENT OF 1996. THE VERTICAL REFERENCE DATUM IS NAVD88.

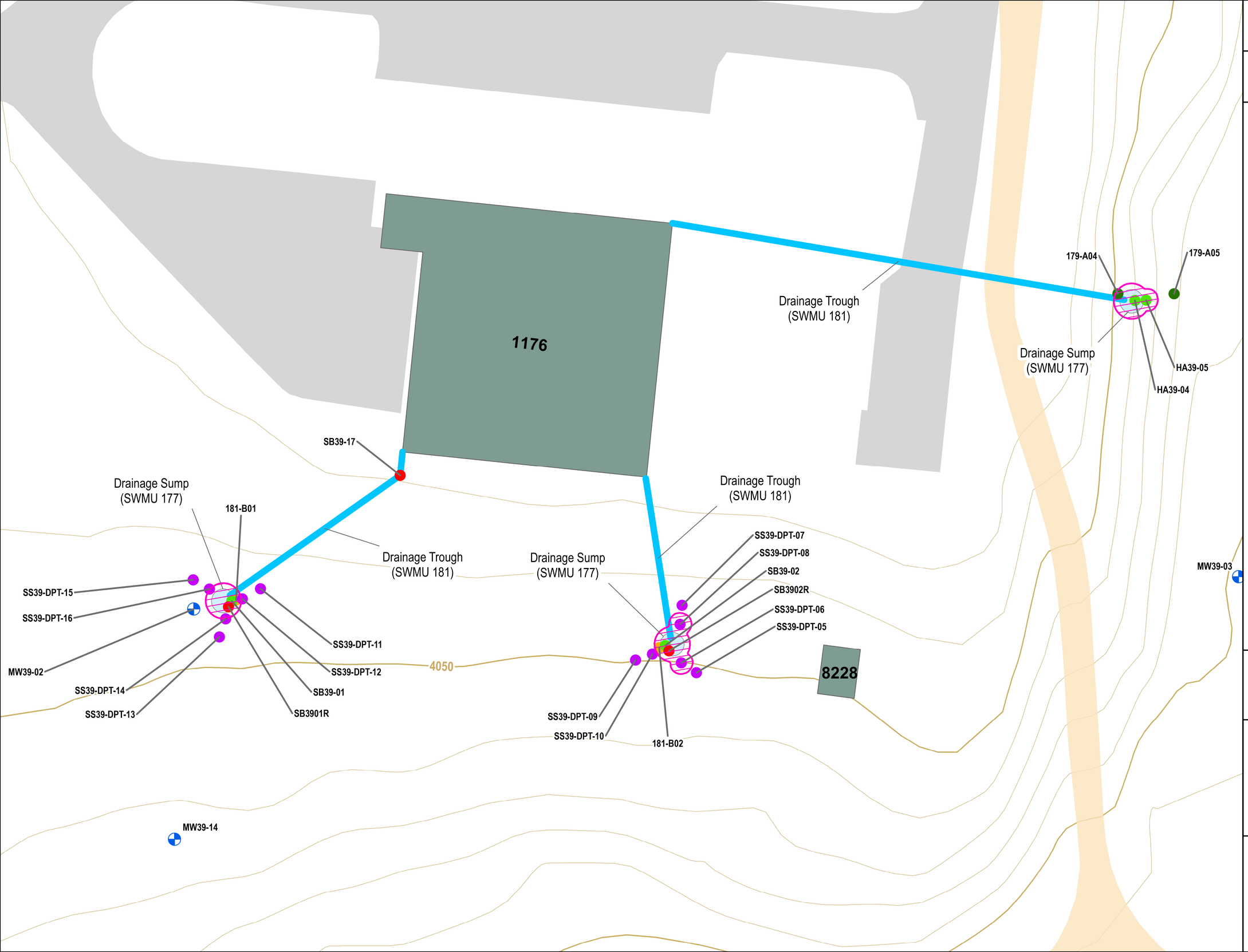

LEGEND

- Proposed Soil Excavation
- Soil Sample: PHASE I (1991)
- Soil Sample: PHASE II (1993)
- Soil Sample: Supp. RFI (1994)
- Soil Sample: Supp. RFI (2006)
- Soil Sample: ACM (2010)
- Monitoring Well
- Drainage Trough (SWMU 181)
- Drainage Sump (SWMU 177)
- HOLLOMAN AFB BUILDING
- ROAD/PARKING (PAVED)
- ROAD/PARKING (UNPAVED)
- INDEX CONTOUR (10')
- INTERVAL CONTOUR (2')

Note:
1) Monitoring well locations shown for reference.

N

0 25 50
FEET

ACCELERATED CORRECTIVE MEASURES
WORK PLAN ADDENDUM
HOLLOMAN AIR FORCE BASE
ALAMOGORDO, NEW MEXICO

TETRA TECH
OAK RIDGE, TENNESSEE

FIGURE 4-4

AREAS OF SOIL CONTAMINATION (SWMU 177 SUMPS)

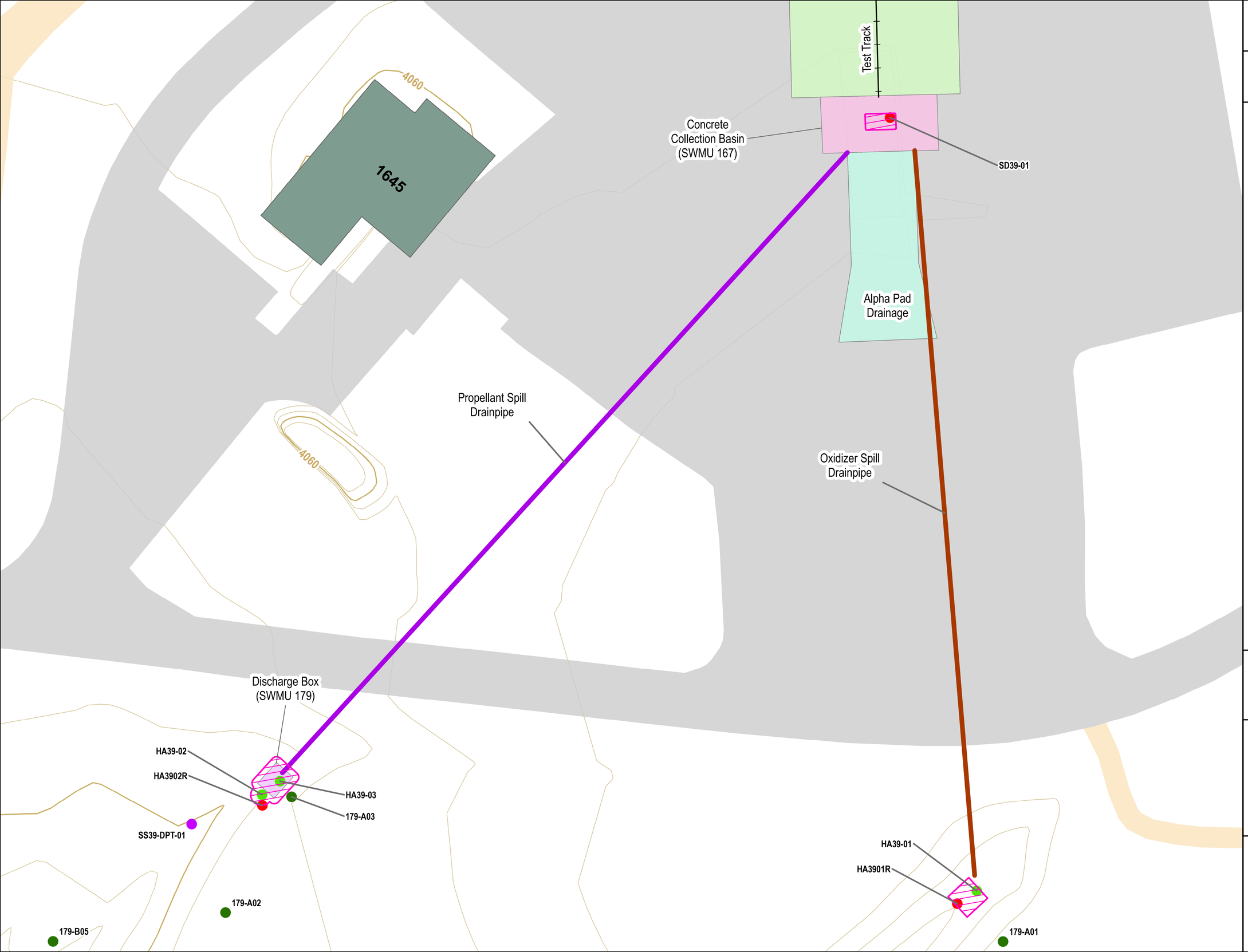

GIS FILENAME: K:\GIS\Holloman\SS-39_ACM WorkPlan\Fig4-5_SS-39 SL Contam_SWMU167_179.mxd
DATE: 11-23-2011
SOURCE: TETRA TECH

ALL COORDINATES PROJECTED IN NEW MEXICO STATE PLANE, CENTRAL ZONE FIPS 3002 IN FEET, AND THE HORIZONTAL DATUM IS NAD83 ADJUSTMENT OF 1996. THE VERTICAL REFERENCE DATUM IS NAVD88.

LEGEND

- Proposed Soil Excavation
- Soil Sample: PHASE I (1991)
- Soil Sample: PHASE II (1993)
- Soil Sample: Supp. RFI (1994)
- Soil Sample: Supp. RFI (2006)
- Soil Sample: ACM (2010)
- Monitoring Well
- TEST TRACK
- Oxidizer Spill Drainpipe
- Propellant Spill Drainpipe
- Alpha Pad
- Alpha Pad Drainage
- Concrete Collection Basin (SWMU 167)
- Discharge Box (SWMU 179)
- HOLLOMAN AFB BUILDING
- ROAD/PARKING (PAVED)
- ROAD/PARKING (UNPAVED)
- INDEX CONTOUR (10')
- INTERVAL CONTOUR (2')

Note:
1) Monitoring well locations shown for reference.

N

0 25 50
FEET

ACCELERATED CORRECTIVE MEASURES
WORK PLAN ADDENDUM
HOLLOMAN AIR FORCE BASE
ALAMOGORDO, NEW MEXICO

TETRA TECH
OAK RIDGE, TENNESSEE

FIGURE 4-5

AREAS OF SOIL CONTAMINATION (SWMU 167 and SWMU 179)

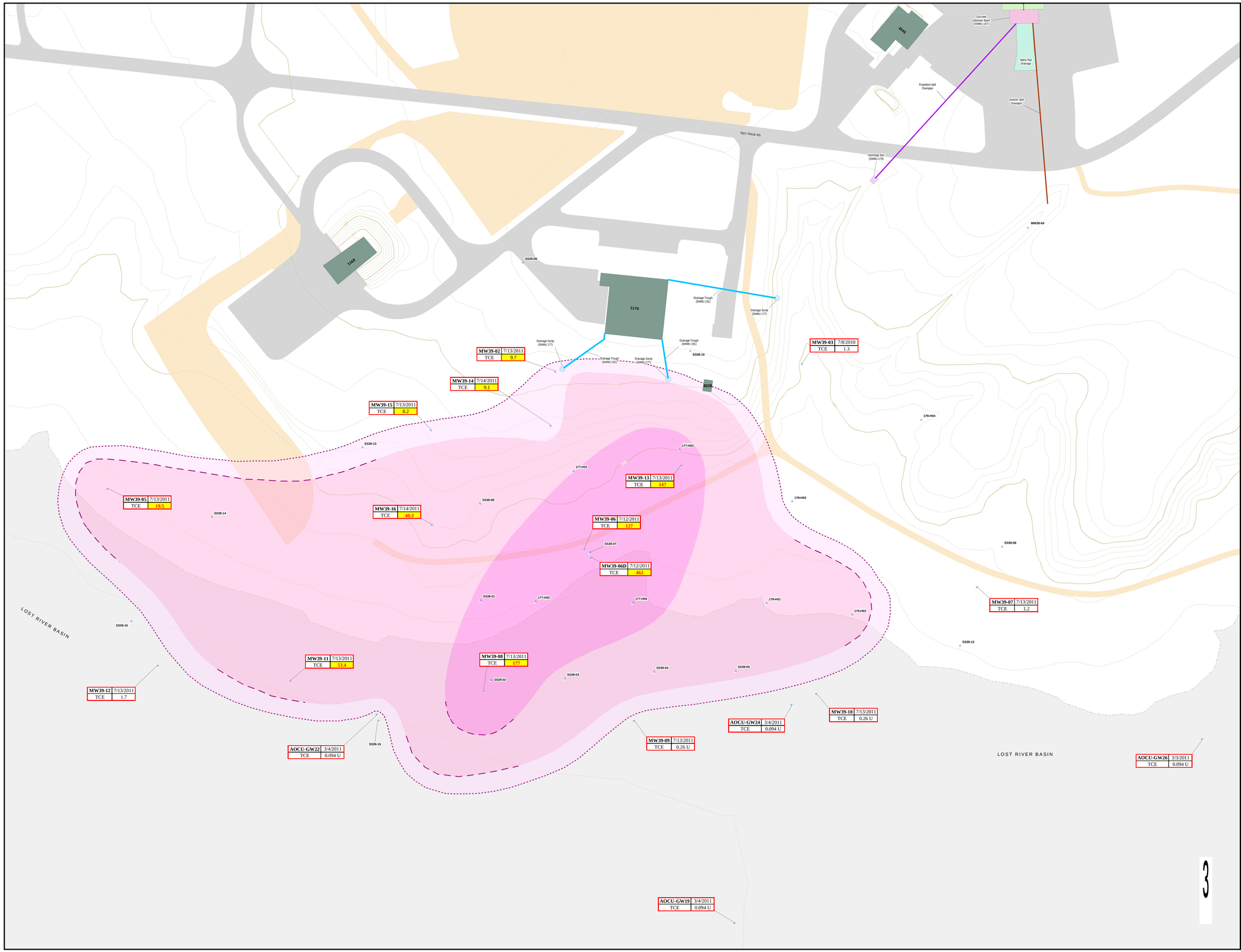

GIS FILENAME: K:\GIS\Holloman\SS-39_ACM WorkPlan\ Fig4-6_SS-39 GW Contam_TCE.mxd
DATE: 11-23-2011
SOURCE: TETRA TECH

ALL COORDINATES PROJECTED IN NEW MEXICO STATE PLANE, CENTRAL ZONE FIPS 3002 IN FEET, AND THE HORIZONTAL DATUM IS NAD83 ADJUSTMENT OF 1996. THE VERTICAL REFERENCE DATUM IS NAVD88.

LEGEND

TCE Concentration

- >5 - 10 µg/L
- >10 - 100 µg/L
- >100 µg/L
- Inferred Isoconcentration
- Inferred Limit of Vapor Intrusion Risk
- Monitoring Well
- Non-Monitoring Well (1993, 1998)
- Non-Monitoring Well (AOC-U)
- TEST TRACK
- Drainage Trough (SWMU 181)
- Oxidizer Spill Drainpipe
- Propellant Spill Drainpipe
- Alpha Pad
- Alpha Pad Drainage
- Concrete Collection Basin (SWMU 167)
- Discharge Box (SWMU 179)
- Drainage Sump (SWMU 177)
- HOLLOMAN AFB BUILDING
- ROAD/PARKING (PAVED)
- ROAD/PARKING (UNPAVED)
- INDEX CONTOUR (10')
- INTERVAL CONTOUR (2')
- WETLAND AREA

Note:
1) Results in µg/L:
Values in RED exceed the Tap Water Residential Screening Level
Values highlighted YELLOW exceed the Vapor Intrusion Residential Screening Level
2) Lab Qualifier: U = not detected

Chemical	Abbrev.	Screening Levels	
		Tap Water	Vapor
Organics µg/L			
Trichloroethene	TCE	16.5	5

0 50 100 150 200
FEET

ACCELERATED CORRECTIVE MEASURES
WORK PLAN ADDENDUM
HOLLOMAN AIR FORCE BASE
ALAMOGORDO, NEW MEXICO

TETRA TECH
OAK RIDGE, TENNESSEE

FIGURE 4-6

AREA OF GROUNDWATER EXCEEDING VAPOR INTRUSION SCREENING LEVELS

APPENDIX A

FIELD LOGS
(2010 ACM SITE INVESTIGATION)

BORING AND COMPLETION LOGS

SAMPLE COLLECTION LOGS

CHAIN OF CUSTODY FORMS

MONITORING WELL DEVELOPMENT LOGS

FIELD LOG BOOK

(Provided on CD)

APPENDIX B

SURVEY DATA

SURVEY COORDINATES FOR SS-39 ENVIRONMENTAL SAMPLE LOCATIONS

SOIL SAMPLES		
LOCID	Northing	Easting
179-B01	685269.25013200000	1670855.12009000000
179-B02	685216.05994900000	1670847.87011000000
179-B03	685161.18013800000	1670859.37008000000
179-B04	684988.06007700000	1670860.62008000000
179-B05	685329.62009000000	1670856.87009000000
179-B06	685292.56012500000	1671130.86987000000
179-B07	685222.36997600000	1671066.87000000000
179-B08	685138.81010400000	1670974.36985000000
179-H01	684780.11987600000	1670781.50016000000
179-H02	684763.61990900000	1670903.99991000000
179-H03	684925.80987400000	1670818.25009000000
179-H04	685042.93004600000	1671003.00004000000
181-B01	685116.11986100000	1670494.37016000000
181-B02	685100.05985300000	1670637.36987000000
HA39-01	685347.62005400000	1671185.62009000000
HA3901R	685343.06068000000	1671178.72213000000
HA39-02	685378.05995400000	1670931.36994000000
HA3902R	685381.85948700000	1670931.26922000000
HA39-03	685386.67968700000	1670937.61993000000
HA39-04	685217.49990700000	1670798.25013000000
HA39-05	685217.58816200000	1670802.04802000000
SB39-01	685115.75011100000	1670492.87016000000
SB3901R	685113.79309400000	1670491.74647000000
SB39-02	685100.75014100000	1670639.50012000000
SB3902R	685098.93157500000	1670640.73666000000
SB39-17	685158.29103600000	1670549.81591000000
SD39-01	685622.99253500000	1671154.75302000000
SS39-DPT-01	685371.38343500000	1670906.19208000000
SS39-DPT-02	685273.28672300000	1670838.54464000000
SS39-DPT-03	685125.19828600000	1670847.08493000000
SS39-DPT-04	684919.24682000000	1670806.70428000000
SS39-DPT-05	685086.70301300000	1670633.26882000000
SS39-DPT-06	685090.05369200000	1670628.14257000000
SS39-DPT-07	685109.51916700000	1670628.40107000000
SS39-DPT-08	685103.08127300000	1670627.74818000000
SS39-DPT-09	685090.99533300000	1670612.69698000000
SS39-DPT-10	685093.00915600000	1670618.41072000000
SS39-DPT-11	685122.58268900000	1670492.22646000000
SS39-DPT-12	685119.15907300000	1670486.12749000000
SS39-DPT-13	685106.27291800000	1670478.35015000000
SS39-DPT-14	685112.41195500000	1670480.43227000000
SS39-DPT-15	685125.60717900000	1670469.48682000000
SS39-DPT-16	685122.49173800000	1670474.98085000000

SURVEY COORDINATES FOR SS-39 ENVIRONMENTAL SAMPLE LOCATIONS

GROUNDWATER SAMPLES		
LOCID	Northing	Easting
MW39-01	685830.50983600000	1671298.56409000000
MW39-02	685113.10510300000	1670479.97616000000
MW39-03	685124.02010700000	1670833.30189000000
MW39-04	685319.26807600000	1671156.83110000000
MW39-05	684944.84001900000	1669838.80487000000
MW39-06	684858.13186000000	1670521.44884000000
MW39-06D	684846.26114800000	1670531.06693000000
MW39-07	684804.00598400000	1671083.81091000000
MW39-08	684654.79893300000	1670377.33102000000
MW39-09	684612.47913600000	1670592.70001000000
MW39-10	684650.94198500000	1670853.49805000000
MW39-11	684669.59614700000	1670101.07895000000
MW39-12	684691.67484300000	1669910.95105000000
MW39-13	684978.53286500000	1670660.51320000000
MW39-14	685035.19810600000	1670473.53555000000
MW39-15	685028.84969400000	1670301.93616000000
MW39-16	684893.07831200000	1670303.27014000000
177-H01	684969.50007500000	1670504.87014000000
177-H02	684782.50012100000	1670450.86992000000
177-H03	685000.50001300000	1670656.87016000000
177-H04	684780.67991500000	1670590.36996000000
179-A01	685329.56005100000	1671194.99999000000
179-A02	685339.87006900000	1670918.24989000000
179-A03	685381.11998700000	1670941.74984000000
179-A04	685219.74990300000	1670792.50014000000
179-A05	685219.74990300000	1670811.50010000000
SS39-01	684784.15234900000	1670372.33759000000
SS39-02	684669.76379800000	1670386.78671000000
SS39-03	684672.17193000000	1670492.74647000000
SS39-04	684681.80478400000	1670620.37975000000
SS39-05	684683.00885000000	1670737.17643000000
SS39-06	684861.09346800000	1671118.87284000000
SS39-07	684852.66500700000	1670528.86910000000
SS39-08	684922.50213800000	1670371.13353000000
SS39-09	685268.07559300000	1670432.54187000000
SS39-10	685141.64638400000	1670672.15556000000
SS39-11	684324.00005400000	1668899.99999000000
SS39-12	684719.01107500000	1671058.66824000000
SS39-13	685003.17618900000	1670202.56103000000
SS39-14	684903.35716300000	1669987.26979000000
SS39-15	684611.96765400000	1670225.43861000000
SS39-16	684753.99985000000	1669872.00001000000
AOCU-GW19	684321.34454700000	1670737.49762000000
AOCU-GW22	684620.46435600000	1670225.30934000000
AOCU-GW24	684634.06177000000	1670819.11459000000
AOCU-GW26	684585.24001700000	1671407.09635000000

APPENDIX C

VAPOR INTRUSION MODEL RESULTS

(Provided on CD)

APPENDIX D

ANALYTICAL DATA
(2010 ACM)

(Provided on CD)

APPENDIX E

HAFB STANDARD OPERATING PROCEDURES

HOLLOMAN AIR FORCE BASE
STANDARD OPERATING PROCEDURES

HAFB SOP-1	Documentation, Sample Handling, Chain-of-Custody, and Shipping
HAFB SOP-2	Sampling Equipment Decontamination
HAFB SOP-3	Staking, Utility Clearance, and Permitting
HAFB SOP-4	Direct Push Sampling for Soil and Groundwater
HAFB SOP-5	Soil Sampling for Chemical Analysis
HAFB SOP-6	Procedure for Field Screening of Volatile Organics
HABP SOP-7	Lithologic Description and Geotechnical Sampling
HAFB SOP-8	Groundwater Sampling for Chemical Analysis
HAFB SOP-9	Field Management of Investigation-Derived Waste (IDW)
HAFB SOP-10	Borehole Abandonment and Site Restoration

SOP HAFB-1
DOCUMENTATION, SAMPLE HANDLING, CHAIN-OF-CUSTODY, AND SHIPPING

1.0 OBJECTIVE

This SOP contains specific details concerning sample control, documentation, and transportation procedures.

2.0 EQUIPMENT AND MATERIAL

The following equipment will be necessary to complete sample documentation, handling, and shipment:

Forms and Records

- Log books;
- Chain-of-custody forms;
- Custody seals;
- Sample identification labels; and,

Shipping Supplies

- Clear tape;
- Rigid plastic coolers;
- Strapping tape;
- “This Side Up” arrow labels;
- Address labels;
- Heavy-duty plastic trash bags and ties;
- Small and large re-sealable plastic bags;
- Protective mesh for various sample bottle sizes; and
- Ice.

3.0 METHODOLOGY

Sample control and documentation are necessary to ensure the defensibility of data and to verify the quality and quantity of work performed in the field. Accountable documents include field log books, instrument calibration log books, sample logs, correspondence, sample labels, chain-of-custody forms, photographs, and analytical records. All information pertinent to a field activity must be entered into a log book, including uncompleted work.

3.1 SAMPLE CONTROL AND DOCUMENTATION

All log books should be numbered and are to be bound with consecutively numbered pages; log book pages and data should never be removed. Loose-leaf forms, sample logs, and figures used for sample location will be kept in a 3-ring binder. Indelible black ink will be used for recording all data. At minimum, the following data should be recorded during the course of the investigation:

- Date, field observations, and weather conditions, including any unusual circumstances;
- Calibration of field equipment before sample analysis;
- Names of field crew members;
- Name of the sample collector;
- Identification of sampling location and depth of sample;
- Rough sketch of sampling location related to significant physical object;
- Depth to water at groundwater sampling locations;
- Purge method and purge volume;
- Sample collection method;
- Types and numbers of sample containers used;
- Preservatives used;
- Results of field analysis; and
- Sample observations (color, turbidity, odor, soil type, etc.).

To change an incorrect entry, draw a line through the entry, write the change above or adjacent to the entry, and date and initial the change. If anyone other than the person to whom a log book is assigned makes an entry, that person should date and sign the entry. All project log books are to be turned over to the field manager at the end of each work period and to a central file at the end of the field activity.

3.2 SAMPLE LABELING

In addition to the field log book, a complete sample label should be filled out for each sample.

All sample containers should be sealed immediately after sample collection. Samplers should place the completed sample label onto the sample container and secure it with clear tape. Sample labels must

identify the sample ID, site, sample type, sampler's initials, sampling location, depth, time, date, analyses requested, laboratory, containers, and any special instructions. Labels should be completed with black waterproof ink.

3.3 SAMPLE CONTROL/CHAIN-OF-CUSTODY/SHIPMENT

Once the samples have been collected and labeled, they should be kept cool with ice or in a refrigerator. The following procedures are for sample handling and shipment to a laboratory for analysis:

- Fill out a chain-of-custody form for every sample shipping container (cooler). Information recorded on this form includes the following:

  - Samples collected and corresponding laboratory analyses;
  - Time and date of sample;
  - Sample number;
  - Type of sample;
  - Sampler's initials;
  - Preservatives used;
  - MS/MSD analysis;
  - Relinquisher's signature, date, and time; and
  - Special instructions.

- Double check the information on the chain-of-custody form against the sample labels and sample logs. Make sure each sample is accounted for and that samples are being sent to the correct laboratory.

- Wipe the sample container exteriors dean with a paper towel dampened with clean water.

- Ensure that each container has a properly completed label.

- Place the sample containers in re-sealable plastic bags. Containers from the same sample location and depth can be placed in the same bag, but separate samples from different sites will not be placed in the same bag to prevent cross-contamination.

- Place the sample container(s) in a cooler lined with a large plastic garbage bag.

- Pack the container(s) with ample amounts of packing material to prevent possible breakage. This material should be placed under the container(s) and between all containers for multiple container shipments to prevent the containers from touching each other or the bottom of the shipping container.

- Place ice among the sample containers to maintain the samples at or below 4°C during transport.

- Add any needed packing material to fill all void spaces.

- Seal the completed chain-of-custody form for the appropriate cooler in a re-sealable plastic bag and tape it to the inside of the top lid of the cooler. The sample custodian should retain the duplicate copy of the form and maintain it in a file of field documentation.

- Securely close the outer shipping container with strapping tape around both ends. If there is a drain on the cooler, tape it shut.

- Affix signed and dated custody seals to all closures on the shipping container to prevent tampering.

- Affix "This Side Up" arrows on two opposing sides of the center. No DOT placards are required.

- Compliance with all applicable DOT and International Air Transport Association (IATA) shipping regulations is required.

4.0 COMMENTS

- To expedite the sampling and shipping process, it is recommended that preprinted sample labels, chain-of-custody forms, address labels, and overnight delivery forms be used.

- If using a refrigerator to store samples, monitor the temperature using a thermometer and be careful not to freeze water samples.

SOP HAFB-2
SAMPLING EQUIPMENT DECONTAMINATION

1.0 OBJECTIVE

Decontamination of boring equipment and sampling tools is performed as a QA measure and safety precaution. It helps prevent cross-contamination among samples and helps maintain a clean working environment for the safety of field personnel. The methodology for decontamination was prepared in accordance with the following documents:

EPA. 1991. Environmental Compliance Branch, Standard Operating Procedures and Quality Assurance Manual (SOPQAM), U.S. Environmental Protection Agency, Region IV, Environmental Service Division, Athens, Georgia.

NIOSH, OSHA, USCG, and EPA. 1985. *Occupational Safety and Health Guidance Manual for Hazardous Waste Site Activities.* Prepared by the National Institute for Occupational Safety and Health (NIOSH), Occupational Safety and Health Administration (OSHA), U.S Coast Guard (USCG), and EPA. U.S. Department of Health and Human Services, Public Health Service, Centers for Disease Control, NIOSH report, October 1985. Washington, D.C.: U.S. Government Printing Office.

2.0 EQUIPMENT AND MATERIAL NEEDS

- Soap: Laboratory grade, non-phosphated - or equivalent;
- Tap water;
- Reagent-grade water;
- Pesticide-grade isopropanol;
- Cleaning brushes;
- Cleaning containers: plastic bucket and galvanized steel pans:
- Waste containers; and
- Health and safety equipment as outlined in the HASP.

3.0 METHODOLOGY

Small, reusable equipment, including sampling equipment, is mainly decontaminated by rinsing with liquids that include soap or detergent solutions, tap water, deionized water, or solvents. Following decontamination, if the equipment is not to be reused immediately, it will be stored, protected from recontamination by wrapping in aluminum foil, and appropriately rinsed before the next use.

3.1 PRE-SAMPLING DECONTAMINATION ACTIVITIES

- Don the appropriate PPE, as specified in the HASP and as required for the specific work area.
- Assemble containers and equipment for decontamination, designing the decontamination station in such a manner as to prevent liquid from spilling onto the ground.
- Decontaminate all new equipment or equipment not previously decontaminated before use.
- If the protective wrapping on a piece of pre-cleaned equipment has been torn, or if there is any question about its cleanliness, the equipment should be considered contaminated and undergo the full decontamination procedures before it is used.

3.2 DECONTAMINATING SAMPLING EQUIPMENT

- Remove any solid particles from the equipment or material by brushing and rinsing with available potable water. This will remove gross contamination.
- Wash equipment with a brush and a phosphate-free detergent solution.
- Rinse equipment thoroughly with potable water.
- Double rinse the equipment with reagent grade water.
- Allow equipment to air dry thoroughly. It there is not enough time to air dry completely, the equipment should be rinsed with copious amounts of reagent water. Equipment may then be reused immediately.
- Unless the equipment is going to be used immediately, it must be wrapped in new aluminum foil, shiny side out, to keep it clean until needed. For large bulky equipment, new visqueen can be substituted for the aluminum foil.

3.3 DECONTAMINATION OF LARGE EQUIPMENT

Drilling equipment (rigs, drill rods, augers, bits, etc.), DPT equipment, and other large pieces of field equipment, unable to be decontaminated using the method described above, must be high-pressure steam cleaned before and after each use.

Steam cleaning will be performed at an appropriate central decontamination area specified by the Base. The decontamination area must be capable of containing decontamination fluids and allow for managing of investigation-derived wastes (IDW) as specified in SOP-9.

4.0 COMMENTS

- Any field equipment not used during a field activity must be decontaminated before its return to the equipment stock for reuse at another site. This requirement applies even if the aluminum foil on pre-cleaned equipment is not torn. This requirement can be waived only if after initial decontamination, the equipment was scaled in plastic.

- At each phase of the decontamination process, decontamination fluids and rinsates should be collected and managed as outlined in the appropriate SOP.

- Isopropanol rinse should be omitted for any equipment such as plastic well sounding tapes.

- Solvents should not be used on any type of non Teflon plastic equipment that will contact an environmental sample or be introduced into a monitoring well.

SOP B-3
STAKING, UTILITY CLEARANCE, AND PERMITTING

1.0 OBJECTIVE

To ensure the health and safety of field sampling personnel and prevent damage to underground utilities during soil sampling, precautions must be taken to property locate hazards such as gas lines, high-voltage electrical lines, water mains, communication lines, sewer lines, and so forth.

Before any intrusive work (including hand-auger borings) can begin at Holloman Air Force Base, sampling locations at each site must be cleared and a proper digging permit must be obtained.

2.0 EQUIPMENT AND MATERIAL NEEDS

- Wooden stakes, lathes, hubs, surveyor flags, and/or spray paint;
- Small sledge-type hammer;
- Permanent marker;
- Site maps; and
- Base Civil Engineering Clearance Request (Air Force Form #103).

3.0 METHODOLOGY

- Begin the site clearance procure by locating and marking all soil boring locations at each site, using the following guidelines:
  - If possible, procure ahead of time utility maps so that the preliminary positioning of sample locations will avoid underground obstructions.
  - Visually scan each sample location to be sure that there are no obvious underground lines or obstructions.
  - Pound the flag and the hub/stake firmly into the ground, making sure that it is clearly marked with the site number and the bore-hole number. If the location is on a paved surface, it should be marked with spray paint.
- To obtain all utility clearances, site tours must be completed with appropriate representatives of the Base utilities (electric, plumbing, and Army cable) and New Mexico One Call.

New Mexico One Call coordinates the location of on-Base utilities, including US West phone lines, Simmons' cable lines, and Standard Transport pipe fuel lines. They will provide a control number and submit locator requests. New Mexico One Call can be reached at (800) 321-2537.

- During the site tours, have the locators mark utility locations with flags or spray paint.

- If possible, obtain a blanket site clearance to cover possible additional boring locations at the site. (For certain utilities, this may not be possible. In which case, inquire about the procedure necessary to gain additional clearances).

SOP HAFB-4
DIRECT PUSH SAMPLING FOR SOIL AND GROUNDWATER

1.0 OBJECTIVE

Direct push technology (DPT) will be used to rapidly collect soil and water samples. This technique provides for collection of undisturbed samples and does not generate soil cuttings. This SOP discusses the DPT method only; for actual soil and groundwater sampling procedures. Please refer to the appropriate SOP for soil and groundwater sampling.

2.0 EQUIPMENT AND MATERIAL NEEDS

The DPT operator will need a copy of the subcontractor work plan, waste containers and appropriate health and safety gear. All additional equipment and materials will be provided by the DPT subcontractor. The DPT subcontractor should be equipped with a rig capable of pushing 20 ft and collecting soil and groundwater samples from any interval within that depth. Equipment should include at minimum the following items:

- Hydraulic ram with hammer assembly;
- 1- to 3.25 -inch outside diameter drill rods;
- Piston-type, split-spoon, or equivalent soil sampling device that allows for lithologic characterization and retrieval of at least 400 mL of sample volume;
- GeoProbe, Hydrocone, bailer, Teflon tubing and peristaltic pump, or equivalent water sampling device;
- Small diameter PVC risers and screen to make temporary wells if recovery is too slow;
- Decontamination equipment; and
- Health and safety equipment, as outlined in the HASP.

3.0 METHODOLOGY

- Verify that the subcontractor has the necessary drilling and sampling equipment, as well as proper decontamination supplies.
- Confirm that sampling locations are staked and that the clearances from all on-Base and off-Base utilities have been obtained. Do not begin the sampling until proper digging permits have been obtained and all of the utilities have been marked.

- Locate the sample location and position the DPT rig. If the sample point is on thick asphalt or concrete, the DPT subcontractor will use a hammer-drill or equivalent to drill a hole through the pavement.

- Verify that the sampling tip has been properly decontaminated.

- For soil sampling, hydraulically advance the sampler to above the target sample interval, unlock the piston point, and advance the sampling device through the sampling interval:

  – Pull the rods using the hydraulic apparatus and remove the sample insert or split spoon.
  – Log the soil and collect the required samples as specified in the field sampling plan.

- Continue sampling at additional depth intervals or abandon the borehole, as appropriate for the location.

- If groundwater sampling is necessary, advance the sampler into the water table and collect a sample with the sampling device.

- Collect and manage all wastes as specified in the IDW SOP-9.

- Abandon all boreholes and repair pavement before moving to a new site (see the SOP-10 for abandonment).

4.0 COMMENTS

- If a buried object impedes the DPT sampler or if an insufficient sample volume is recovered, reposition the rig in a location to satisfy the intent at the original sample point and try again. Note this on the borehole logging form.

- If the total recovered sample volume is insufficient for both screening and laboratory analysis, a second hole will be pushed as close as possible to the original hole and an additional sample will be taken from the same depth interval. The two samples will be composited prior to sampling for chemical analysis.

- If a situation arises in which the groundwater recharge is too slow to allow sampling, a PVC well can be inserted temporarily for sampling at a later time.

- If obstructions exist or if a borehole must be moved to avoid utilities, it should be relocated to a position that satisfies the intent of the original location.

- To obtain the actual digging permit, a Base Civil Engineering Clearance Request Form (AF103) must be completed and signed by appropriate parties. (Note that the locators should also sign the form in the appropriate space, as well as initial the site figures). This process is usually expedited through coordination with a representative of the Civil Engineering's Environmental Flight (CEV). Once a digging permit has been issued, it is valid for one month.

- Proper preparation in the initial location and staking is critical for expediting the sampling process. If sampling locations are not properly marked and cleared, significant costs could be incurred through delays while waiting for drilling permits.

- New Mexico One Call requires a 48-hour advance notice before drilling may proceed.

- Utility locators may require information about how long the job will last, the type of marker being used, and the location of the boreholes. Be prepared to provide the various utility locators and signatories on the drilling permit with multiple copies of site figures and location maps.

- When doing any intrusive work on the Base, the contractor must have a valid permit on hand.

SOP HAFB-5
SOIL SAMPLING FOR CHEMICAL ANALYSIS

1.0 OBJECTIVE

Soil samples will be collected for chemical analysis to enable determination of the nature and extent of contamination in soil. Groundwater samples will be collected from monitoring wells or from inert tubing through the direct push sampling methods.

The following procedures were designed to ensure consistent and high quality data collection and are in accordance with EPA procedures for sample collection as detailed in the following document:

EPA 1991. *Environmental Compliance Branch, Standard Operating Procedures and Quality Assurance Manual* (SOPQAM), U.S. Environmental Protection Agency, Region IV, Environmental Services Division, Athens, Georgia.

2.0 EQUIPMENT AND MATERIAL NEEDS

- Appropriate number and types of sample containers (see Table HAFB 5-1);
- Pre-cleaned stainless steel sampling spoons and knife;
- Sample coolers and ice;
- Appropriate field documentation forms and an indelible ink pen;
- Sampling equipment decontamination supplies;
- Waste containers;
- Health and safety equipment, as specified in the HASP.

3.0 METHODOLOGY

- Verify that the subcontractor has the necessary drilling and sampling equipment, as well as proper decontamination supplies.

- Confirm that sampling locations are staked and that the clearances from all on-Base and off-Base utilities have been obtained. Do not begin the sampling until proper digging permits have been obtained and all of the utilities have been marked.

- Locate the sample location and position the DPT rig. If the sample point is on thick asphalt or concrete, the DPT subcontractor will use a hammer-drill or equivalent to drill a hole through the pavement.

- Verify that the sampling tip has been properly decontaminated, as specified in decontamination SOP before beginning penetration.

- For soil sampling, hydraulically advance the sampler to above the target sample interval, unlock the piston point, and advance the sampling device through the sampling interval.

  – Pull the rods using the hydraulic apparatus and remove the sample insert or spilt spoon.
  – Log the soil and collect the required samples as specified in the Work Plan.

- Continue sampling at additional depth intervals or abandon the borehole, as appropriate for the location. To determine if sufficient depth has been covered, see the Work Plan.

- If groundwater sampling is necessary, advance the sampler into the water table and collect a sample with the sampling device as specified in appropriate SOP.

- Collect and manage all wastes as specified in the appropriate SOP.

- Abandon all boreholes and repair pavement before moving to a new site as specified in appropriate SOP.

4.0 COMMENTS

- The supervising geologist should be prepared and have all the supplies available on site to conduct all planned sampling at each site.

- Container and preservation requirements for various analytical methods are detailed in Table HAFB 5-1.

TABLE HAFB 5-1

CONTAINER AND PRESERVATION REQUIREMENTS FOR SOIL SAMPLING

Reference Method	Parameter	Container[1]	Sample Preservation [2]	Maximum Holding Time[3]	
				Extraction	Analysis
EPA 8015	TPH-gas/diesel/ BTEX	1x4 oz wide mouth jar, G	Ice to 4°C	--	14 d
EPA 418.1	TRPH	1x8 oz wide mouth jar, G	Ice to 4°C	--	14 d
EPA 8260	Volatile Organics	2x40 mL G. Septa vial	Ice to 4°C	--	14 d
EPA 8270	B/N/A	1x8 oz wide mouth jar, G	Ice to 4°C	7d	40 d
TAL 6000/7010 series	Metals	1x8 oz wide mouth jar, G	Ice to 4°C	--	6 months
SW 846:9045	pH	1x2 oz wide mouth jar, G	Not specified	--	ASAP
EPA 8080	PCBs/Pesticides	1x8 oz wide mouth jar, G	Ice to 4°C	7d	40 d
Full suite (8240, 8270, 6000/7010)	TCLP	2x8 oz wide mouth jars, G	Ice to 4°C	--	14 d

[1]All containers must have Teflon-lined seals (Teflon-lined septa for all VOA vials).
[2]Container volumes may vary slightly depending upon laboratory specific requirements.
[3]When only one holding time is given, it implies total holding time from sampling until analysis.
G = glass
d = day

SOP HAFB-6
PROCEDURE FOR FIELD SCREENING OF VOLATILE ORGANICS

1.0 OBJECTIVE

Soil samples can be screened in the field for relative concentrations of total volatile organic constituents (VOCs) rapidly and inexpensively. It is important to note; however, that the screening technique is relative and will not quantity the exact concentration of the particular constituents present in the sample matrix. The procedure is only used to determine the relative concentrations of VOCs between sets of soil samples. For example, if 10 soil samples are collected vertically from one soil boring, the screening technique can be used to determine which samples may have relatively higher concentrations of VOCs with respect to the other samples. Section 2.0 covers equipment required to perform the screening. Section 3.0 presents the steps required to perform the sampling.

2.0 EQUIPMENT AND MATERIAL

The following equipment is required for field VOC screening:

- A photoionization detector (PID) or a flame ionization detector (FID);
- Sample containers such as glass jars and aluminum foil or resealable plastic bags; and,
- Calibration gas for the FID on PID (isobulylene for PIDs, methane for FIDs).

3.0 METHODOLOGY

The following steps are employed when screening soil samples for total concentrations of VOCs. The procedure assumes that a fraction of the soil sample has already been collected using the soil sample procedure SOPs.

- Place a fraction of the soil sample collected in a glass jar and cover the jar mouth with aluminum foil or place the sample in a resealable plastic bag. Place the samples in a warm place or area of stable temperature such as a building or temperature controlled environment.

- Allow all the samples to equilibrate to the temperature controlled environment.

- Turn the PID and FID on and calibrate the instrument using the appropriate calibration gas; (i.e. methane for a FID and isobutylene for a PID) using the procedures specified by the manufacturer.

- Insert the probe from the PID or FID into the headspace of the jar (i.e., through the aluminum foil lined lid) or through the plastic bag and collect a sample of the air in the headspace of the jar or bag.

- Observe and record the headspace measurement as parts per million (ppm) in the field notebook or soil boring tog. Note which type of instrument and the calibration gas that was used.

- Repeat the previous steps until all the samples have been screened.

4.0 COMMENTS

- Obtaining a good sample for chemical analysis for VOCs is the first priority.
- Field screening the sample for VOCs using a PID or FID is second priority.
- Transcribing the lithologic descriptions and collecting geotechnical samples is the last priority.

SOP HAFB-7
LITHOLOGIC DESCRIPTION AND GEOTECHNICAL SAMPLING

1.0 OBJECTIVE

Lithologic logging will be performed to define the subsurface geology. All soils will be described using the United Soils Classification System (ASTM Designation D 2488-84: Standard Practice for Description and Identification of Soils [Visual-Manual Procedure]).

2.0 EQUIPMENT AND MATERIAL NEEDS

- Tape measure;
- Munsell soil color chart;
- Hand lens;
- Knife or spatula;
- Dropper with 10% HC1 for calcium carbonate test;
- LaMotte soil texture kit or small vial;
- Water;
- Borehole log forms; and
- Health and safety equipment, as specified in the HASP.

3.0 METHODOLOGY

- Note penetration rates and comments in "remarks" section of logging form (e.g. "easy penetration", hammering required", "2 ft in 3 minutes", etc.) If using a drop hammer, record blow counts.
- Measure entire sample length and record recovery (as total footage recovered over the total length that sampler was pushed) to nearest tenth of a foot. Mark lithologic changes on logging form.
- Separate a small, representative portion of each distinct soil to be identified.
- Identity the color using the Munsell chart.
- Identify the soil type using the field tests outlined in the ASTM guidance. All required tests considered appropriate for soil type should be performed (i.e. tests for fine-grained soils, such as plasticity, need not be performed on coarse-grained soil).

- Record descriptions of the soil on the borehole log form. To facilitate the comparison of logs, all descriptions should use the following order and style:

  - Soil type (*Silty SAND w/Clay*);
  - Soil Color (*Moderate yellow brown (10YR5/4)*;
  - Moisture content;
  - Angularity and shape of particles (if a sand or gravel);
  - Consistency;
  - Cementation;
  - Structure;
  - Dry strength;
  - Dilatancy;
  - Toughness;
  - Plasticity;
  - Miscellaneous descriptors (roots, nodules, odors, texture percentages from the LaMotte kit, etc);
  - USGS Code (SM)

- Note all visible contamination, PID/FID measurements, odor, or any observed evidence of contamination in the sample.

- As necessary, identify the percentages of sand, silt, and clay in each sample using a LaMotte soil texture kit, or by settling using a small vial or bottle.

- The sample should be placed in a soil jar or steel tube and seated with as little air as possible.

- Label the contained for shipment to a lab for geotechnical grain size distribution (without the hydrocarbons portion of the test) (ASTM D421 and D422). Atterberg Limits (ASTM D4318), and moisture content (ASTM D2216).

4.0 COMMENTS

- Obtaining a good sample for chemical analysis is the first priority, collect chemical samples for volatile organic compounds (VOCs) before logging the soil core or taking geotechnical samples.

- Because visible contamination and field screening by FID/PID is used to define extent at contamination, it is essential that all observations concerning odor and staining and PID or FID readings are recorded on the logging form.

- Consistent logging is important for accurate characterization of site geology. Although the geologist may need to use his/her professional judgment to infer contacts and lithology, using the tests listed in the ASTM method will ensure consistent results.

TABLE HAFB 7-1
CONTAINER AND PRESERVATION
REQUIREMENTS FOR GEOTECHNICAL SAMPLES

Reference Method	Parameter	Minimum Volume	Container
ASTM D4318	Atterberg Limits	100 grams	4 oz glass jar[1]
ASTM D2216	Moisture content	50-100 grams	4 oz glass jar[1]
ASTM D421 & 422	Grain size	30-40 grams	2- to 4- oz glass jar[1]

[1] OK to combine these analyses into a larger container.

SOP HAFB-8
GROUNDWATER SAMPLING FOR CHEMICAL ANALYSIS

1.0 OBJECTIVE

Water samples will he collected for chemical analysis to enable determination of the nature and extent of contamination in groundwater. Groundwater samples will be collected from monitoring wells with inert tubing or with direct push sampling methods through the DPT rods.

The following procedures were designed to ensure consistent and high quality data collection and are in accordance with EPA procedures for sample collection as detailed in the following document:

EPA. 1991. *Environmental Compliance Branch, Standard Operating Procedures and Quality Assurance Manual* (SOPQAM), U.S. Environmental Protection Agency, Region IV, Environmental Services Division, Athens, Georgia.

2.0 EQUIPMENT AND MATERIAL NEEDS

- Appropriate number and types of sample containers (see Table HAFB 8-l);
- Pre-cleaned stainless steel sampling spoons and knife;
- Sample coolers and ice;
- Appropriate field documentation forms and an indelible ink pen;
- Sampling equipment decontamination supplies;
- Waste containers;
- Health and safety equipment, as specified in the HASP.

3.0 METHODOLOGY

- Ensure that all equipment is properly calibrated and operated by following the manuals provided by the equipment manufacturer. Record results of the equipment in the log book.

- Calculate the approximate volume of the inert tubing (Teflon) using the formula

  $V = 3.1415 \times r^2 \times \text{Length} \times 7.48$ gal/ft.
  Or if the tubing is ¼ -inch, simply multiply the tubing length by 0.0102 gal/foot.

- Attach the peristaltic pump to the tubing as indicted in the pump instructions.

- Purge the tubing slowly at first to avoid entraining air in the tube. Purge the appropriate volume and store it in the appropriate waste container.

- Fill sample bottles in the following order:

  – Volatile organic compounds
  – Semi-volatile organic compounds
  – Metals
  – Wet tests

- Place sample containers on ice and handle as indicted in the appropriate SOP.

- When sampling is complete, remove tubing from the DPT rods and dispose of all IDW as directed in the SOP.

- Abandon the boring as directed in the appropriate SOP.

4.0 COMMENTS

- The supervising geologist should be prepared and have all the supplies available on site to conduct all planned sampling at each site.

- Container and preservation requirements for various analytical methods are detailed in Table HAFB 5-1.

TABLE HAFB 8-1
CONTAINER AND PRESERVATION REQUIREMENTS FOR GROUNDWATER SAMPLING

Reference Method	Parameter	Container[1]	Sample Preservation[2]	Maximum Holding Time[3]	
				Extraction	Analysis
EPA 8015	TPH-gas/diesel/ BTEX	500 mL brown glass bottle	Ice to 4°C	--	14 d
EPA 8260	Volatile Organic compounds	3x40 mL G. Septa vials	Ice to 4°C, pH<2 with HCl	--	14 d
EPA 8270	B/N/A	2x1 L brown glass	Ice to 4°C	7d	40 d
TAL 6000/7010 series	Metals	500 mL plastic bottle	Ice to 4°C, pH<2 with HNO_3	--	6 months
SW 846:9045	pH	500 mL plastic bottle	Ice to 4°C	--	24 hrs
EPA 8080	PCBs/Pesticides	2x1 L brown glass	Ice to 4°C	7d	40 d
xxxx	Radionuclides	1 L plastic	Ice to 4°C	--	14 d

[1] All containers must have Teflon lined seals (Teflon-lined septa for all VOA vials) glass, brown glass, plastic High density polyethylene.
[2] Container volume may vary slightly depending upon laboratory specific requirements.
[3] When only one holding time is given, it implies total holding time from sampling until analysis.

SOP HAFB-9
FIELD MANAGEMENT OF INVESTIGATION-DERIVED WASTE (IDW)

1.0 OBJECTIVE

To collect and manage IDW in accordance with state and federal regulations, this SOP provide easy-to-follow procedures for characterizing, handling, storing and disposing of IDW generated during the additional characterization program. IDW management techniques emphasize waste minimization.

2.0 EQUIPMENT AND MATERIAL NEEDS

- DOT-approved drums and containers;
- IDW "Analysis Pending" labels;
- "Hazardous Waste" labels and Non Hazardous labels;
- Indelible markers (i.e., Sharpie),
- Clear adhesive tape;
- Ratchet, socket, and crescent wrench for opening/closing drums;
- PPE;
- Plastic buckets for carrying purge water to drums;
- Absorbent pads or booms for cleaning up spills;
- Wooden pallets;
- Waste inventory form; and
- PID or FID.

3.0 METHODOLOGY

3.1 SOIL AND WATER IDW

- Conduct sampling in accordance with the soil and groundwater sampling SOPs.
- It soil is stained, place excess soil (and any excess water sample) in appropriately sized DOT-approved drums or cans. DO NOT PUT SOIL AND WATER IN SAME CONTAINER.

- Place an adhesive label on the side of the container. Using an indelible marker, write the following information on the label:

  - The phrase "Analysis Pending"
  - Accumulation start date
  - Name of waste (e.g., soil from soil or well boring ID numbers)
  - Name and phone number of Holloman AFB contact (CES/CEV)

- When label is complete, cover it with a piece of clear adhesive tape.

- If soil is not stained, conduct VOC screening with a PID or FID.

- If no VOCs are detected in headspace analysis, spread excess soil and water (if any) around borehole.

- If VOCs are detected in the soil, place excess soil and water (if any) in DOT-approved drums, and label the drum (or container) in accordance with step above. DO NOT PUT SOIL AND WATER IN SAME CONTAINER.

- If the site is developed and will not accommodate the spreading of soils then soils containing TPH concentration less than 940 ppm will be spread at a site to be designated by the Base.

- If soils are containerized move to IDW drum storage area.

- Waste characterization will be conducted utilizing previously-collected soil analytical results and additional characterization results. If soils contain TPH in excess of 940 ppm, arrangements will be made for off site disposal pit a permitted petroleum-contaminated soil disposal facility. Decontamination solutions will either be spread on site or placed in the Base sanitary sewer system, following approval from the Base.

3.2 PPE AND DISPOSABLE SAMPLING EQUIPMENT WASTE

- Remove excess solid and liquid waste from PPE and disposable sampling equipment.

- Place all PPE and sampling equipment to be disposed of in sealed plastic trash bags.

- Dispose of trash bags in a dumpster at the IDW staging area.

- If a Base dumpster is not located near the IDW staging area, arrange for one that can be used during the course of the investigation.

SOP HAFB-10
BOREHOLE ABANDONMENT AND SITE RESTORATION

1.0 OBJECTIVE

All boreholes, must be sealed to prevent the spread of contaminants with depth and to eliminate direct pathways from the surface to the subsurface and groundwater. Surface materials such as asphalt and cement that have been drilled or pushed through must also be repaired to a satisfactory condition.

2.0 EQUIPMENT AND MATERIAL NEEDS

- Bentonite chips or granular bentonite and funnel;
- Cold-patch asphalt material and quick-set concrete;
- Ample amounts of water; and
- Health and safety equipment, as specified in the HASP.

3.0 METHODOLOGY

In general, borehole abandonment will be completed by the DPT or HSA subcontractor under supervision of the rig geologist. The subcontractor will supply all necessary materials listed above. The contractor, however, may need small amounts of bentonite to seal hand-auger boreholes.

- After a boring has been completed by DPT technique, leave the drive rods in place pending abandonment.

- Add bentonite chips or granular bentonite slowly into the top of the drum reds using a funnel. As the rods are being slowly pulled from the borehole, add bentonite to complete the seal to the surface.

- If the rods have been driven into groundwater, it will not be possible to seal the borehole through the rods. (The bentonite chips will stick to the inside of the rods, clogging the end). In this case, carefully extract the rods and slowly add bentonite chips, being careful not to allow bridging.

- Hydrate the seal using ample amounts of potable water.

- If the borehole is through asphalt or concrete, leave the seal below the bottom of the pavement to allow for sufficient fill and patching material.

APPENDIX F

WASTE PROFILE SAMPLE DATA

Appendix F
Waste Profile Sample Data for SS-39
Holloman AFB, New Mexico

Site:	SS-39		SS-39		SS-39	
Location:	SS39-SUMPS		SS39-SUMPS1		SS39-SUMPS2	
Sample ID:	SS39-IGN		SS39-TCLP-SUMP1		SS39-TCLP-SUMP2	
Sample Date:	11/07/2010		11/07/2010		11/07/2010	
Analyte	**Value**	**Q**	**Value**	**Q**	**Value**	**Q**
General Chemistry						
Percent Solid	91.8					
Ignitability (Flashpoint) (Degrees Fahrenheit)	200	>				
TCLP Metals (µg/L)						
Lead			10	U	10	U

Notes:

TCLP - Toxicity Characteristic Leaching Procedure

Q - analytical result qualifier

Value - reported analytical concentration

U - Not detected.

APPENDIX G

ACTIVITY HAZARD ANALYSIS

SS-39 Activity Hazard Analysis (AHA)

Activity: Mobilization/Demobilization *Analyzed by/Date:*

ACTIVITY / PHASE	POTENTIAL HAZARDS	RECOMMENDED ACTIONS / CONTROLS
Mobilization • Perform site survey • Perform initial inspections of the intended work areas • Set up material and equipment lay-down areas • Establish excavation locations • Establish DPT soil sample locations and monitoring well installation locations • Arrange for utility permits, notify appropriate authorities • Establish erosion control devices • Establish borrow area for backfill material, as needed • Perform inspections of vehicles and equipment arriving/preparing to depart the site • Set up on-site environmental monitoring device • Collecting and confirming applicable worker training and medical compliance documentation *Demobilization* • Clean up area • Decontaminate equipment • Backfill with borrowed soil, as required	1. Minor cuts, abrasions or contusions handling equipment and tools 2. Heavy lifting (muscle strains and pulls) 3. General traffic hazard 4. Vehicular accident when moving large equipment to the support area 5. Intermittent high noise levels 6. Dust and flying debris 7. Equipment moving parts	1. Wear cut-resistant gloves when handling items with sharp or rough edges. 2. Practice safe lifting techniques (use mechanical lifting devices such as a dolly whenever possible, ensure clear path of travel, good grasp on object, lift with legs not back, and obtain help when needed to lift large, bulky, or heavy items. 3. Stay clear of the designated contractor's route, use signals, horns, etc. when entering site where workers are present. 4. Designate/demarcate vehicle and equipment staging areas. Inform all site personnel of heavy equipment areas and of their responsibility to stay clear of moving vehicles. Wear high-visibility vests and all times. 5. Operators/nearby personnel are to wear hearing protection if noise levels are such that they must raise their voice in order to communicate with someone who is within arm's reach (approx. 2') of them. SSHO responsible for determining and designating when hearing protection is required. Hearing protection is to consist of either ear muffs or ear plugs that have a noise reduction rating (NRR) of at least 25 dB. Workers must also be able to communicate, hear/recognize/respond to alarms, and recognize and avoid nearby moving equipment. 6. Control dust by spraying water in high traffic areas on an as-needed basis. Wear protective PPE, gloves, long pants, safety glasses. 7. Ensure that workers are thoroughly trained and competent to perform their assigned task with the equipment used in implementation work. Ensure that back-up alarms are functional on equipment. The equipment operators and on-site Supervisors responsible for the equipment are to ensure that the equipment inspection forms have been reviewed and completed, and that all moving parts are guarded if such parts are exposed. Check/test all emergency stop controls. Use escort vehicles with flashing lights to warn and control local traffic when moving large equipment to support area.

SS-39 Activity Hazard Analysis (AHA)

Activity: Mobilization/Demobilization *Analyzed by/Date:*

ACTIVITY / PHASE	POTENTIAL HAZARDS	RECOMMENDED ACTIONS / CONTROLS
	8. Striking existing utility lines	8. Pre-inspect vehicle moving lanes noting overhead utilities. Do not approach within 10' of any overhead electric line of 50 kV or less. Additional clearance distance is required for lines of > 50kV. Reference Section 4.8.8 of the HASP. Verify the location of utility lines. Pre-plan the move with the local utility companies if utility lines must be moved. Pre-survey the height of equipment and height of utility lines to determine which lines must be removed or raised.
	9. Overhead and Foot Hazards	9. Wear hard hats and steel toe shoes, use peripheral vision
	10. Snake bite	10. Immediately take the victim to nearest medical facility. If immediate transportation not possible keep the victim calm and splint the extremity of the bite
	11. Insect bite (mosquitoes, chiggers, fire ants, spiders, ticks, etc.)	11. Wear protective clothing and use USEPA-registered insect repellent applied and reapplied in accordance with manufacturer's recommendations (Note some repellants are intended for use directly on skin, and other more potent repellants are intended for use on clothing only. If the potential for insect bites appears to be significant, use both types of repellants). Tuck in pant legs into boots and tape up boots/pants leg joints with duct tape. Once under the skin, chiggers are difficult to remove, but can be smothered by applying a commercial ointment, nail polish, or KWELL® lotion to the affected area. Follow these procedures to remove a tick: Use tweezers to firmly grasp the tick at its head or mouth, as close to the skin as possible. Pull firmly and steadily on the tick until it lets go of the skin. Swab the bite with alcohol or antiseptic. Do not use petroleum jelly or a lit match to try to remove a tick.
	12. Stung by insects	12. Spray USEPA-registered insect repellent around the pant leg, wash the bite area with soap and water, apply cool compress to the area, call poison control and take victim to hospital if affected area swells and condition worsens.
	13. Inclement weather	13. Stay informed about severe weather, follow hazard communication procedures.

SS-39 Activity Hazard Analysis (AHA)

Activity: Mobilization/Demobilization *Analyzed by/Date:*

ACTIVITY / PHASE	POTENTIAL HAZARDS	RECOMMENDED ACTIONS / CONTROLS
	14. Heat stress 15. Contact with contaminated media during demobilization	14. Drink plenty of fluids. Take frequent breaks in cool shaded areas. Monitor heat rate and temperature. 15. Wear appropriate PPE, including gloves, long pants, and eye protection.
Equipment To Be Used	**Inspection Requirements**	**Training Requirements**
Excavator, DPT rig, Drill Rig, field vehicles, hand tools and two-way communication devices	Visual inspection prior to use by user and inspection documented in accordance with Section 4.5.2 of the HASP.	All personnel participating in this activity must be current with HAZWOPER training requirements listed in 29 CFR 1910.120 (e).
Personal Protective Equipment: **Minimum:** Steel toe boots, safety glasses, gloves, hard hats **Optional items:** hearing protection. **HTRW:** None anticipated for this task.	Initial PPE inspection performed by SSHO. Ongoing (prior to each use) inspections responsibilities of PPE users.	PPE training in proper use, care, storage, and limitations. It is anticipated that this has been covered in employees 40-hr General Site Worker training, which is to be verified by the SSHO through initial training documentation and reviewed prior to permitting personnel to participate in site activities, and will be confirmed by visual observations of worker's activities.

SS-39 Activity Hazard Analysis (AHA)

Activity: Excavate contaminated soil and sediment, DPT Soil Sampling, and Monitoring Well installation *Analyzed by/Date:*

ACTIVITY / PHASE	POTENTIAL HAZARDS	RECOMMENDED ACTIONS / CONTROLS
Heavy Equipment Operation • Inspect equipment • Perform safety inspection	1. Slips/Trips/Falls	1. Practice good housekeeping to keep the site clear of obstructions, materials, equipment and other tripping hazards. Wear appropriate foot protection to prevent slips and trips. Use caution when working on uneven and wet ground surfaces.
Excavating contaminated soil and sediment • Position excavator over excavation area • Remove soil and sediment place in staging area disposal • Backfill excavation	2. Struck by equipment/moving parts	2. Maintain visual contact with the crane operator. Ensure appropriate PPE and safe work practice. Be aware of work being performed within 5 ft. Avoid personnel working in the operator's blind spot.
	3. Overhead and Foot Hazards	3. Watch out for moving parts, wear protective equipment, hard hat, steel toe boots
	4. Minor cuts, abrasions or contusions handling equipment and tools	4. Wear cut-resistant gloves when handling items with sharp or rough edges.
DPT Soil Sampling • Position DPT rig over point and drill to depth of injection • Drill to depth and collect soil sample	5. Heavy lifting (muscle strains and pulls)	5. Use safe lifting practice, use additional help from coworker
Monitoring Well Installation • Position drill rig over point and drill to depth of monitoring well placement • Collect and containerize drill cuttings • Install and develop well	6. Noise	6. Operators/nearby personnel are to wear hearing protection if noise levels are such that they must raise their voice in order to communicate with someone who is within arm's reach (approx. 2') of them. SSHO responsible for determining and designating when hearing protection is required. Hearing protection is to consist of either ear muffs or ear plugs that have a noise reduction rating (NRR) of at least 25 dB. Workers must also be able to communicate, hear/recognize/respond to alarms, and recognize and avoid nearby moving equipment.
	7. Weather	7. SSHO will notify site workers of inclement weather
	8. Vehicular hazard	8. Establish speed limit for vehicles traveling around the site.
	9. Manhandling of heavy machinery	9. Ensure that workers are thoroughly trained and competent to perform their assigned task with the equipment used in investigation. Ensure that back-up alarms are functional on equipment. The equipment operators and on-site Supervisors responsible for the equipment are to ensure that the equipment have

SS-39 Activity Hazard Analysis (AHA)

Activity: Excavate contaminated soil and sediment, DPT Soil Sampling, and Monitoring Well installation *Analyzed by/Date:*

ACTIVITY / PHASE	POTENTIAL HAZARDS	RECOMMENDED ACTIONS / CONTROLS
		been inspected and completed, and that all moving parts are guarded if such parts are exposed. Check/test all emergency stop controls. Use escort vehicles with flashing lights to warn and control local traffic when moving.
	10. Fire hazard	10. All motors must be shut off during refueling. Smoking in the vicinity of the drilling rig is not permitted. An A-B-C fire extinguisher must be maintained on the drilling rig and associated motorized equipment. Fuel containers will not be stored within 10' of the drilling rig motor. Fuel will be stored in UL approved safety containers with contents clearly labeled. All personnel must stay clear of work zone and exclusion zone.
	11. Minor cuts or abrasions when handling landfill waste material (as necessary)	11. Wear cut-resistant gloves when handling items with sharp or rough edges.
	12. Chemical exposure	12. Wear nitrile rubber gloves during sample collection activities and when handling waste material.
	13. Insect bites	13. Shake out boots before donning. Use insect repellants (products containing DEET should be applied to exposed skin, products containing Permethrin should be applied to clothing only. Follow manufacturer's recommendations for application). Tape up pants leg to work boot joints with duct tape. Wear light-colored clothing to better see and remove any insects. Perform close body inspections at least daily upon leaving the site.
	14. Tools or personnel falling in open trench	14. Maintain a three foot exclusion area around open trench
	15. Exposure to contaminated media	15. Follow good decontamination practices (work from top down and outside in). Nitrile rubber gloves are to be the last item of PPE removed. Wash hands and face following personal decontamination and prior to performing any hand-to-mouth activity.

SS-39 Activity Hazard Analysis (AHA)

Activity: Excavate contaminated soil and sediment, DPT Soil Sampling, and Monitoring Well installation *Analyzed by/Date:*

ACTIVITY / PHASE	POTENTIAL HAZARDS	RECOMMENDED ACTIONS / CONTROLS
	16. Pinch Points 17. Air emissions and radiological exposure	16. Wear gloves during equipment operation 17. Monitor work/breathing zone through handheld PID and Geiger Counter, follow action levels identified in Table 5-1 of the HASP.
Equipment To Be Used	**Inspection Requirements**	**Training Requirements**
Excavator, DPT Rig, Dump Truck, Hand tools, two way communication devices, sampling equipment	Visual inspection prior to use by user and inspection documented in accordance with Section 4.5.2 of the HASP.	All personnel participating in this activity must be current with HAZWOPER training requirements listed in 29 CFR 1910.120 (e).
Personal Protective Equipment: **Minimum:** Steel toe boots, safety glasses hard hat, hearing protection, nitrile gloves **HTRW**: In exceptional cases (escaped VOC vapor) follow respiratory protection as described in Table 5-1 of the HASP.	Initial PPE inspection performed by SSHO. Ongoing (prior to each use) inspections responsibilities of PPE users.	PPE training in proper use, care, storage, and limitations. It is anticipated that this has been covered in employees 40-hr General Site Worker training, which is to be verified by the SSHO through initial training documentation and reviewed prior to permitting personnel to participate in site activities, and will be confirmed by visual observations of worker's activities. SSHO trained in proper calibration, use, and care of air monitoring devices used (PID/FID). This is a general component of 40-hr HAZWOPER training, and SSHO must become very familiar with the Operator's Manual for any instrument used.

SS-39 Activity Hazard Analysis (AHA)

Activity: Groundwater Sampling *Analyzed by/Date:*

ACTIVITY / PHASE	POTENTIAL HAZARDS	RECOMMENDED ACTIONS / CONTROLS
Groundwater sampling • Well purging and development • Collection of groundwater samples (via small battery-operated pumps) and placement of samples into containers	1. Minor cuts, abrasions or contusions handling equipment and tools 2. Slips, Trips, Falls 3. Back Strain 4. Chemical exposure 5. Insect bites 6. Pinch Points	1. Use hand tools that are in good condition. Hand tool users must be familiar with their proper use and must use them only in a manner that is consistent with their intended operation. 2. Clear intended work areas and walking paths of roots, weeds, limbs and other ground hazards. Practice good housekeeping to keep the site clear of obstructions, materials, equipment and other tripping hazards. Ensure that work boots have adequately aggressive sole design. Use caution when working on uneven and wet ground. 3. Practice safe lifting techniques (use mechanical lifting devices such as a dolly whenever possible, ensure clear path of travel, good grasp on object, lift with legs not back, obtain help when needed to lift large, bulky, or heavy items). 4. Wear nitrile rubber gloves during sample collection activities. Approach from upwind direction and screen well head space with PID of FID upon opening. If readings above background are noted, open well head cover and retreat, allow well to ventilate for several minutes. Return and commence sampling while monitoring breathing zone with PID or FID. Work may be performed only if breathing zone areas are determined to be at background levels. 5. Shake out boots before donning. Use insect repellants (products containing DEET should be applied to exposed skin, products containing Permethrin should be applied to clothing only. Follow manufacturer's recommendations for application). Tape up pants leg to work boot joints with duct tape. Wear light-colored clothing to better see and remove any insects. Perform close body inspections at least daily upon leaving the site. 6. Wear gloves during equipment operation.
Equipment To Be Used	**Inspection Requirements**	**Training Requirements**
Sample collection pumps, tools and containers (jars, spatulas, spoons, etc.)	Visual inspection prior to use by user.	All personnel participating in this activity must be current with HAZWOPER training requirements listed in 29 CFR 1910.120 (e).
Personal Protective Equipment: **Minimum:** Steel toe boots, safety glasses **Optional items:** Hardhat, hearing protection. If sampling done concurrently with drilling, observe Drilling AHA PPE as well. **HTRW:** None anticipated during regular sampling.	Initial PPE inspection performed by SSHO. Ongoing (prior to each use) inspections responsibilities of PPE users. FID to be subjected to calibration and operational checks in accordance with manufacturer's recommendations (but not less than daily)	PPE training in proper use, care, storage, and limitations. It is anticipated that this has been covered in employees 40-hr General Site Worker training, which is to be verified by the SSHO through initial training documentation and reviewed prior to permitting personnel to participate in site activities, and will be confirmed by visual observations of worker's activities. SSHO trained in proper calibration, use, and care of air monitoring devices used (PID/FID). This is a general component of 40-hr HAZWOPER training, and SSHO must become very familiar with the Operator's Manual for any instrument used.

SS-39 Activity Hazard Analysis (AHA)

Activity: Equipment and Personal Decontamination *Analyzed by/Date:*

ACTIVITY / PHASE	POTENTIAL HAZARDS	RECOMMENDED ACTIONS / CONTROLS
Personal Decontamination • Wash hands • Segregate removal of PPE (wash and rinse reusable items, dispose of non-reusable items) *Decontamination of Heavy Equipment* • Use steam pressure washer in decontamination area	1. Slips, Trips, Falls	1. Clear intended decon pad location of roots, weeds, limbs and other ground hazards. Practice good housekeeping to keep the site clear of obstructions, materials, equipment and other tripping hazards. Wear appropriate foot protection to prevent slips and trips. Use caution when working on uneven and wet ground surfaces.
	2. Exposure to contaminated media	2. Follow good decontamination practices (work from top down and outside in). Nitrile rubber gloves are to be the last item of PPE removed. Wash hands and face following personal decontamination and prior to performing any hand-to-mouth activity.
	3. Noise	3. Pressure washer operator must wear hearing protection (muffs or plugs with NRR of at least 25 dB)
	4. Flying projectiles	4. Restrict other personnel from decon pad during pressure washing operations. Pressure washer operator must exercise care when directing the wand so that it is not pointing at himself/herself or at any other worker. Pressure washer operator must wear safety glasses with side shields and brow protection or goggles.
	5. Falling objects	5. Place items to be decontaminated on ground or on washing/drying racks in a manner that they are secure and will not fall. Wear steel toe safety footwear.
	6. Strains/sprains from heavy lifting	6. Practice safe lifting techniques (use mechanical lifting devices such as a dolly whenever possible, ensure clear path of travel, good grasp on object, lift with legs not back, obtain help when needed to lift large, bulky, or heavy items)
Equipment To Be Used	**Inspection Requirements**	**Training Requirements**
Hand tools (hand brushes, garden sprayers, etc.), pressure washer, FID for screening to ensure effective decontamination	Visual inspection prior to use by user. Check wooden handles for cracks or splinters. Inspect pressure washer prior to putting into service to ensure that it is in good working order, and ensure that fittings are secure. PID to be subjected to calibration and operational checks in accordance with manufacturer's recommendations (but not less than daily)	All personnel participating in this activity must be current with HAZWOPER training requirements listed in 29 CFR 1910.120 (e).

SS-39 Activity Hazard Analysis (AHA)

Activity: Equipment and Personal Decontamination *Analyzed by/Date:*

ACTIVITY / PHASE	POTENTIAL HAZARDS	RECOMMENDED ACTIONS / CONTROLS
Personal Protective Equipment: **Minimum**: Steel toe boots, safety glasses **Optional items**: Hardhat, hearing protection **HTRW**: Decontamination area pressure washer operators are to wear safety impact eye protection with side shields and brow protection or goggles, hearing protection, and nitrile gloves. If contact with overspray cannot be avoided, rain suit or moisture-repellant disposable coveralls may be specified by the SSHO	Initial PPE inspection performed by SSHO. Ongoing (prior to each use) inspections responsibilities of PPE users.	PPE training in proper use, care, storage, and limitations. It is anticipated that this has been covered in employees 40-hr General Site Worker training, which is to be verified by the SSHO through initial training documentation and reviewed prior to permitting personnel to participate in site activities, and will be confirmed by visual observations of worker's activities. SSHO trained in proper calibration, use, and care of air monitoring devices used (PID/FID). This is a general component of 40-hr HAZWOPER training, and SSHO must become very familiar with the Operator's Manual for any instrument used.

APPENDIX H

CHEMICAL CONCENTRATION VERSES TIME PLOTS

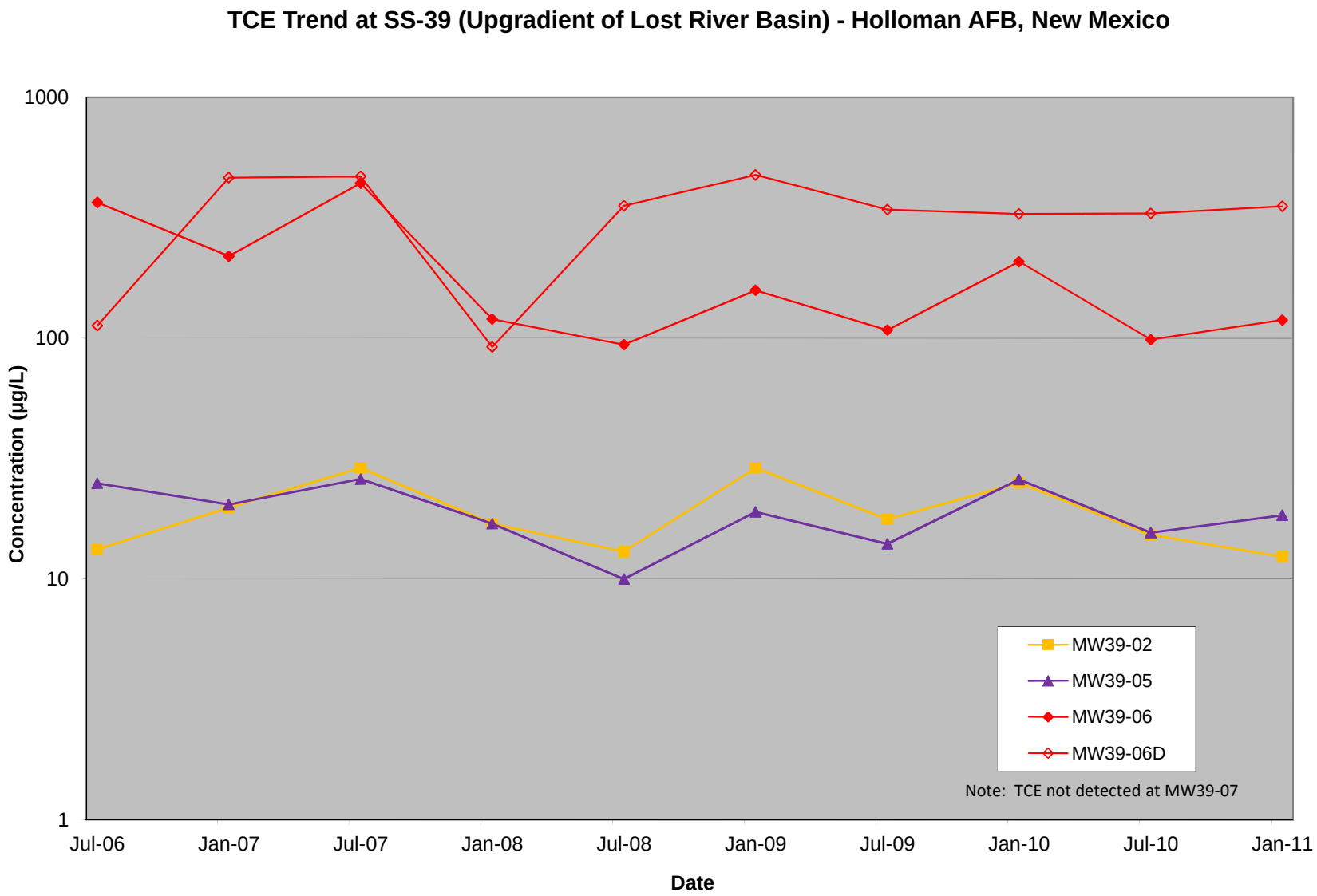
TCE Trend at SS-39 (Upgradient of Lost River Basin) - Holloman AFB, New Mexico
1000
100
10
1
Concentration (µg/L)
Jul-06
Jan-07
Jul-07
Jan-08
Jul-08
Jan-09
Jul-09
Jan-10
Jul-10
Jan-11
Date
MW39-02
MW39-05
MW39-06
MW39-06D
Note: TCE not detected at MW39-07

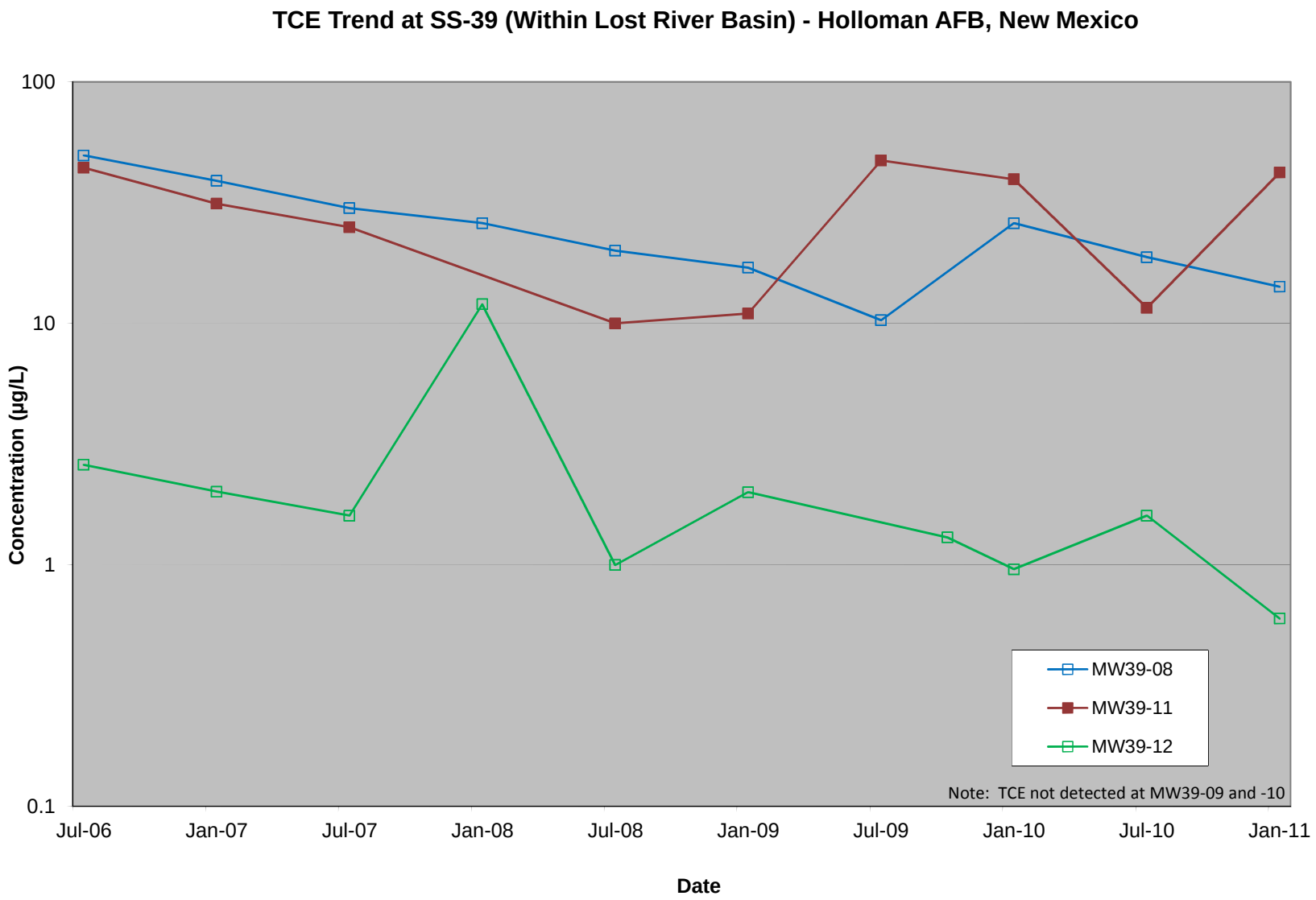
TCE Trend at SS-39 (Within Lost River Basin) - Holloman AFB, New Mexico
100
10
1
0.1
Concentration (µg/L)
Jul-06
Jan-07
Jul-07
Jan-08
Jul-08
Jan-09
Jul-09
Jan-10
Jul-10
Jan-11
Date
MW39-08
MW39-11
MW39-12
Note: TCE not detected at MW39-09 and -10

11/6/10 SD27 & SS39 DPT/well Installation

0800 - Arrive onsite at field trailer.

0820 - Safety meeting with drillers, load truck for the day.

0915 - Arrive at SD-27. will install remaining wells without Rad-Tech Support. Aaron O. (RadTech) screened trucks and personel the previous night. All were well under the limit including samples. He had to leave for another project.

0945 - Begin setting well SD27-MW2.

1045 - well SD27-MW2 complete.

1100 - Set up at well SD27-MW4.

1150 - well SD27-MW4 complete. we are now out of screen borrowed from BAHTE. Stuart has went to Las Cruces to pick up overnight order.

1200 load up and pack for SS-39. Break for lunch.

1300 - Arrive at SS-39, set up at SS39-DPT-05 at sump cluster 2.

1320 - Sample SS39-DPT-05A

1330 - Sample SS39-DPT-05B

1340 - Sample SS39-DPT-05C

1350 - Set up at Location SS39-DPT-06

SD27 & SS39 DPT/well Installation 11/6/10 cont

1355 - Sample SS39-DPT-06A

1400 - Sample SS39-DPT-06B

1410 - Sample SS39-DPT-07C

1420 - Set up at Location SS39-DPT-07

1425 - Sample SS39-DPT-07A

1435 - Sample SS39-DPT-07B

1450 Sample SS39-DPT-07C

1500 - Set up at Location SS39-DPT-08

1510 - Sample SS39-DPT-08A

1520 - Sample SS39-DPT-08B

1525 Sample SS39-DPT-08C

1535 - Set up at Location SS39-DPT-09

1540 - Sample SS39-DPT-09A

1550 - Sample SS39-DPT-09B

1600 - Sample SS39-DPT-09C

1605 - Set up at SS39-DPT-10

1610 - Sample SS39-DPT-10A

1620 - Sample SS39-DPT-10B

1635 - Sample SS39-DPT-10C

This completes Sump 2 sampling.

1650 - Pack up at SS39 and return to the trailer to drop samples and prepare for next day.

1830 - Drum cuttings and sample for TCLP.

2000 - offsite. EOD.

11/6/10

11/7/10 5027 + 5539 DPT/well Installation

0730 - Arrive onsite.

0745 - Health and safety meeting

0820 - Pack truck for the days' sampling.

0900 - Arrive onsite.

0915 - decide to drill 5539-MW13. well gives us problems setting when trying to push with 3.25" rods. Decide to set the well at 10' bgs due to a hard layer at 10'.

1300 - Break for lunch.

1400 - return and set up at 5539-DPT-11. issues with drill rig. Drillers fix rig but takes ~1.5hr to fix

1540 - Begin drilling.

1550 - Sample 5539-DPT-11A.

1600 - Sample 5539-DPT-11B

1605 - Sample 5539-DPT-11C

1610 - Set up at Location 5539-DPT-12

1615 - Sample 5539-DPT-12A

1620 - Sample 5539-DPT-12B

1625 - Sample 5539-DPT-12C

1635 - Set up at Location 55-39-DPT-13

1640 - Sample 5539-DPT-13A

1645 - Sample 5539-DPT-13B

1650 - Sample 5539-DPT-13C

1655 - Set up at Location 5539-DPT-14

5027 + 5539 DPT/well Installation 11/7/10 cont

~~1655~~ 1700 - Sample 5539-DPT-14A

1710 - Sample 5539-DPT-14B

1715 - Sample 5539-DPT-14C

1730 - Pack up and load to trailer.

1815 - Arrive back at trailer, drop off samples and unload truck.

1850 - Drum IDW cuttings and secure.

1900 - Prep and plan for tomorrow in trailer.

2000 - off Base EOD.

11/7/10

Brian Clement

11/8/10 SD27 + SS39 DPT/well Installation
0700 - Arrive on site at trailer.
0720 - Health and safety meeting.
0730 - load truck.
0800 - Arrive at SS39. Recieve call from Valerie Bogle about missed hold times and labels on bottles. Original VOCs had 14 day hold time and new sample method is only a 48 hr hold time. all samples at SD-27 are void for VOCs. Also samples were not to have extra labels on them. we placed TL labels on the vials. so VOCs for SS39-DPT-05-14 have to be re-sampled. Jeremy discusses this while Brandon continues at SS39 sampling.
0910 - set up at Location SS39-DPT-15
0920 - Sample SS39-DPT-15A
0935 - Sample SS39-DPT-15B
0950 - Sample SS39-DPT-15C
0955 - set up at Location SS39-DPT-16
1015 - Sample SS39-DPT-16A
1020 - Sample SS39-DPT-16B
1030 Sample SS39-DPT-16C.
1035 - Brandon heads to the trailer to take off labels of weekends samples,

SD27 + SS39 DPT/well Installation 11/8/10 cont
while Jeremy takes over sampling at SS39.
1050 - set up at Location SS39-DPT-04.
1100 - Sample SS39-DPT-04A.
1110 - Sample SS39-DPT-04B
1125 - Sample SS39-DPT-04C
1135 - set up at Location SS39-DPT-03.
1140 - Sample SS39-DPT-03A.
1145 - Sample SS39-DPT-03B
1150 - Sample SS39-DPT-03C.
1200 - set up at SS39-DPT-02. as well as ship coolers from this weekend sampling. sent TPH-DRO and metals only, we could not get labels off of VOA vials, will freeze vials and try to remove labels.
1215 - Sample SS39-DPT-02A.
Sample SS39-DPT-02B.
1305 - Sample SS39-DPT-02C.
1310 - Set up at Location SS39-DPT-01
1320 - sample SS39-DPT-01A
1330 - Sample SS39-DPT-01B
1345 - Sample SS39-DPT-01C.
1400 - Pack up and return to get these samples out. Per a conversation with the Lab we can sample up to 1300, ship

11/8/10 con't SD27 + SS39 DPT/well Installation

those out that day and every thing sampled after we can ship out the next day.

1515 - Finish packing samples for the day. Complete chain of custody.

1400 while Brandon was packing samples, Jeremy stayed to SS-39 to install MW14, MW15, and MW16. Stuart left this morning for Tennessee.

1630 Take samples to truck stop to meet FedEx on way out of town. Drillers left for the day. Brandon stayed at trailer to prepare for tomorrows shipment. we will recieved new sample containers from Lab in the morning for resample.

1730 - Jeremy returns and we unload the truck and drum IDW cuttings from the day.

1830 - Take off trash and empty liners and secure trailer.

1900 - off Base EOD

Brandon Clowers
11/8/10

SD27 + SS39 DPT/well Installation 11/9/10

0700 - Arrive onsite at trailer.

0730 - Health and safety meeting when drillers arrive.

0745 - load truck for the day. Drillers go to SS-39 to get the drill rig and take to SD-27.

0845 - Arrive at SD-27 to resample DPT points for VOCs, TPH-GRO and Moisture content.

0910 - set up at Location SD27-DPT-01.

0920 resample SD-27-DPT-01A

0935 - resample SD-27-DPT-01B

0950 - set up at SD27-DPT-02

1020 - resample SD27-DPT-02A, move to 03

1025 - resample SD27-DPT-03A

1035 - set up at SD27-DPT-04

1100 - resample SD27-DPT-04A, move to 05

1105 - resample SD27-DPT-05A

1110 - resample SD27-DPT-05B

1120 - set up at Location SD27-DPT-06

1135 - resample SD27-DPT-06A

1145 - set up at SD27-DPT-07

1200 - resample SD27-DPT-07A

1205 - Break for lunch, will pack these coolers as we are out of sample vials, more should arrive at the end of the day.

11/9/10 cont SD27/5539 DPT/well installation

1230 - Samples packed and left for Fed ex man on trailer doorstep.

1320 - Head back to SD-27.

1335 - Brandon begins development of 3 installed wells using stainless bailer to surge and purge water. Two purge cycles of 15 mins and 10 mins used for each well.

1400 - Jeremy begins installation of SD27-MW05 using Augers on Geoprobe. First Attempt they lose 4' of well due to collasps. Step out and re drill.

1540 - Complete installation of SD27-MW05.

1550 - Move to install SD27-MW01.

1645 - Attempt to push well casing down with geoprobe fails when hole collasps losin ~3', well casing breaks off below surface. Retrieve casing. Will have to re-set well in the morning.

1740 - Pack up as SD-27, Drillers leave for the day. Jeremy & Brandon back to the trailer. 3 well development complete

1800 - unload truck into trailer.

SD27 + 5539 DPT/well Installation 11/9/10 cont

1840 - Retrieve coolers of sample supplies from BAHTE's building. Bring to trailer to sort thru.

1915 - Label remaing bottles by hand in the trailer to help speed things along.

2015 - Drum IDW cuttings and secure.

2100 - Secure trailer and leave Base. EOD.

Brandon Clowers 11/9/10

11/10/10 SD27+5539 DPT/well Installation

0630- Arrive on site at trailer.
0645- Safety meeting/Load truck for the day.
0705- head to SD-27.
0720- Brandon sets up to water sample the three wells developed the previous day while Jeremey resets SD27-MW01.
0915- Complete installation of SD27-MW01, move onto re-sample VOCs for DPT pts 08-12.
0930- setup at SD27-DPT-08
0940 resample SD27-DPT-08A
0950 - resample SD27-DPT-08B
1005 - resample SD27-DPT-08C
1015 - set up at SD27-DPT-09
1020 - resample SD27-DPT-09A
1025 - resample SD27-DPT-09B
1035 - resample SD27-DPT-09C
1040- sample SD27-MW04 for Groundwater
1045- setup at SD27-DPT-10
1050- resample SD27-DPT-10A
1100 - resample SD27-DPT-10B
1200 - resample SD27-DPT-10C
Took extra time on 10C due to hard layer. Driller use a lot of time

SD27+5539 DPT/well Installation 11/10/10 cont

on this. This hard layer is also why we could not obtain 08D.
During this at 1120 SD27-MW03 was sampled for Groundwater.
1200- SD27-MW02 was sampled for Groundwater. FD taken.
1220- set up at SD27-DPT-11 while Jeremy continues to sample Brandon begins development on SD27-MW05 and 01.
1235- resample SD27-DPT-11A
1245- resample SD27-DPT-11B
1300 - resample SD27-DPT-11C
1310- set up at SD27-DPT-12
1320 - resampled SD27-DPT-12A
1330- resampled SD27-DPT-12B
1345- resampled SD27-DPT-12C.
1400- pack up and head to trailer for sample shipment. Finished with drill rig at this location. Only thing that remains is to sample MW05 and MW01 and do well pad completion.
1500- samples packed and taken into town at the fed Ex store to ship.
1630- return to 5539 to resample for VOCs.

11/10/10 cont. SD27+SS39 DPT/well Installation

1650 - Set up at Location SS39-DPT-05
1655 - resampled SS39-DPT-05A
1700 - resampled SS39-DPT-05B
1705 - resampled SS39-DPT-05C
1720 - Set up at SS39-DPT-06.
1735 - resampled SS39-DPT-06A
1740 - resampled SS39-DPT-06B
1745 - resampled SS39-DPT-06C
1800 - Pack up at SS39 and return to trailer.
1840 - Return and unpack the truck, drillers head home.
1930 - Drum IDW cuttings and secure. Secure purge water and label drums.
2000 - Take trash and used liners to dumpster.
2015 - Make out the Chain of custody for tomorrow and prep coolers.
2100 - off Base EOD

Brandon Davis 11/10/10

SD27+SS39 DPT/well Installation 11/11/10

0600 - Arrive at site trailer.
0620 - Health and safety meeting with drillers, Pack truck for sampling. will complete remaing re sampling at SS-39.
0700 - head to SS39. Jeremy will drop me off at SS39 and go to finish sampling remaining two wells at SD27 sivee he is flight line trained.
0740 - set up at Location SS39-DPT-07
0750 - resample SS39-DPT-07A
0755 - resample SS39-DPT-07B
0800 - resample SS39-DPT-07C
0815 - set up at Location SS39-DPT-08
0825 - resample SS39-DPT-08A
0830 - resample SS39-DPT-08B
0835 - resample SS39-DPT-08C
0840 - set up at Location SS39-DPT-09
0850 - resample SS39-DPT-09A.
0855 - resample SS39-DPT-09B
0900 - resample SS39-DPT-09C
0902 - set up at Location SS39-DPT-10
0905 - resample SS39-DPT-10A
0910 - resample SS39-DPT-10B
0915 - resample SS39-DPT-10C
0950 - set up at Location SS39-DPT-11

11/11/10 Cont SD27+SS39 DPT/well Installation

1000 - resample SS39-DPT-11A
1005 - resample SS39-DPT-11B
1010 - resample SS39-DPT-11C
1012 - set up at location SS39-DPT-12
1015 - resample SS39-DPT-12A
1020 - resample SS39-DPT-12B
1025 - resample SS39-DPT-12C
1030 - set up at location SS39-DPT-13
1040 - resample SS39-DPT-13A
1045 - resample SS39-DPT-13B
1050 - resample SS39-DPT-13C
1055 - set up at location SS39-DPT-14
1100 - resample SS39-DPT-14A
1105 - resample SS39-DPT-14B
1110 - resample SS39-DPT-14C
this completes all DPT resampling at SS-39. While Brandon finished Sampling at SS-39 Jeremy finished Groundwater sampling at SD-27.
0850 - SD27-MW05 sampled
1005 - SD27-MW01 sampled.
1130 - Head back to trailer to pack samples. Drillers Break for lunch then will begin well pad construction at SS-39 and SD-27.

SD27+SS39 DPT/well Installation 11/11/10 cont

1230 - Finish packing samples for the day.
1300 - Pack up rental pumps for return shippment to Pine.
1330 - drum and secure IDW Cuttings, unload truck from sampling.
1500 - Take samples into town at FedEX location for shippment. Pick up lunch and return to SS39.
1630 - Return to find 3 of the 4 wells completed.
1740 - Complete well pad construction of all wells at SS39
1800 - Pack up all of equipment at SS39. Drill rig cleaned and packed on trailer.
1830 - Return to trailer to offload extra supplies and clean trailer and organize equipment.
1945 - Take remaing trash to dumpster and secure drum storage site and BAHTE's area.
2030 - Prepare last rad samples for tomorrow's shipment and finalize site paper work and trailer cleaning.
2230 - off Base EOD

[signature] 11/11/10

Tetra Tech, Inc.
800 Oak Ridge Turnpike, Ste A-500
Oak Ridge, TN 37830
865/283-9900

CHAIN-OF-CUSTODY

Laboratory Name: **Accutest Laboratories** Address: **4405 Vineland Rd. Suite C-15 Orlando, FL 32811** Contact: **Sue Bell (813/741-3338)**

Project Name **Holloman AFB, SS39** Project Location **Holloman AFB, New Mexico**

Project No. **100-TEN-T93002-1** Project Contact **Maureen McMyler** Site Telephone No. **865-621-8754**

Report to: Maureen McMyler 800 Oak Ridge Turnpike 865/535-2030

Bill to: Sheila Hall, 800 Oak Ridge Turnpike 865/283-9900

Project Manager/Supervisor **Mike Higgins**

Item No.	Sample Number	Date	Time	Comp	Grab	Matrix	Sample Description, Location	Number of Containers	VOCs by SW8260B	TPH-GRO by SW8015B	TPH-DRO by 8015BModified	RCRA Metals by SW6010B/ SW7471A	PAHs by SW8270C	TCLP Metals	Notes
1	SS39-DPT-05A	11/6/2010	1320		X	SO	SS39-DPT-05, Depth 4	6	X	X	X	X			Outside Drainage Sump Cluster 2
2	SS39-DPT-05B	11/6/2010	1330		X	SO	SS39-DPT-05, Depth 8	6	X	X	X	X			Outside Drainage Sump Cluster 2
3	SS39-DPT-05C	11/6/2010	1340		X	SO	SS39-DPT-05, Depth 11	6	X	X	X	X			Outside Drainage Sump Cluster 2
4	SS39-DPT-06A	11/6/2010	1355		X	SO	SS39-DPT-06, Depth 4	6	X	X	X	X			Outside Drainage Sump Cluster 2
5	SS39-DPT-06B	11/6/2010	1400		X	SO	SS39-DPT-06, Depth 8	6	X	X	X	X			Outside Drainage Sump Cluster 2
6	SS39-DPT-06C	11/6/2010	1410		X	SO	SS39-DPT-06, Depth 11	6	X	X	X	X			Outside Drainage Sump Cluster 2
7	SS39-DPT-07A	11/6/2010	1425		X	SO	SS39-DPT-07, Depth 4	6	X	X	X	X			Outside Drainage Sump Cluster 2
8	SS39-DPT-07B	11/6/2010	1435		X	SO	SS39-DPT-07, Depth 8	6	X	X	X	X			Outside Drainage Sump Cluster 2
9	SS39-DPT-07C	11/6/2010	1450		X	SO	SS39-DPT-07, Depth 11	6	X	X	X	X			Outside Drainage Sump Cluster 2
10	SS39-DPT-08A	11/6/2010	1510		X	SO	SS39-DPT-08, Depth 4	6	X	X	X	X			Outside Drainage Sump Cluster 2
11	SS39-DPT-08B	11/6/2010	1520		X	SO	SS39-DPT-08, Depth 8	6	X	X	X	X			Outside Drainage Sump Cluster 2
12	SS39-DPT-08C	11/6/2010	1525		X	SO	SS39-DPT-08, Depth 11	6	X	X	X	X			Outside Drainage Sump Cluster 2
13	SS39-DPT-09A	11/6/2010	1540		X	SO	SS39-DPT-09, Depth 4	6	X	X	X	X			Outside Drainage Sump Cluster 2
14	SS39-DPT-09B	11/6/2010	1550		X	SO	SS39-DPT-09, Depth 8	6	X	X	X	X			Outside Drainage Sump Cluster 2
15	SS39-DPT-09C	11/6/2010	1600		X	SO	SS39-DPT-09, Depth 11	6	X	X	X	X			Outside Drainage Sump Cluster 2
16	SS39-DPT-10A	11/6/2010	1610		X	SO	SS39-DPT-10, Depth 4	6	X	X	X	X			Outside Drainage Sump Cluster 2
17	SS39-DPT-10B	11/6/2010	1620		X	SO	SS39-DPT-10, Depth 8	6	X	X	X	X			Outside Drainage Sump Cluster 2
18	SS39-DPT-10C	11/6/2010	1635		X	SO	SS39-DPT-10, Depth 11	6	X	X	X	X			Outside Drainage Sump Cluster 2
19	SS39-DPT-11A	11/7/2010	1550		X	SO	SS39-DPT-11, Depth 4	5	X	X	X	X			Outside Drainage Sump Cluster 1
20	SS39-DPT-11B	11/7/2010	1600		X	SO	SS39-DPT-11, Depth 8	6	X	X	X	X			Outside Drainage Sump Cluster 1
21	SS39-DPT-11C	11/7/2010	1605		X	SO	SS39-DPT-11, Depth 11	5	X	X	X	X			Outside Drainage Sump Cluster 1
22	SS39-DPT-12A	11/7/2010	1615		X	SO	SS39-DPT-12, Depth 4	6	X	X	X	X			Outside Drainage Sump Cluster 1
23	SS39-DPT-12B	11/7/2010	1620		X	SO	SS39-DPT-12, Depth 8	5	X	X	X	X			Outside Drainage Sump Cluster 1
24	SS39-DPT-12C	11/7/2010	1625		X	SO	SS39-DPT-12, Depth 11	5	X	X	X	X			Outside Drainage Sump Cluster 1
25	SS39-DPT-13A	11/7/2010	1640		X	SO	SS39-DPT-13, Depth 4	5	X	X	X	X			Outside Drainage Sump Cluster 1
26	SS39-DPT-13B	11/7/2010	1645		X	SO	SS39-DPT-13, Depth 8	5	X	X	X	X			Outside Drainage Sump Cluster 1
27	SS39-DPT-13C	11/7/2010	1650		X	SO	SS39-DPT-13, Depth 11	5	X	X	X	X			Outside Drainage Sump Cluster 1
28	SS39-DPT-14A	11/7/2010	1700		X	SO	SS39-DPT-14, Depth 4	6	X	X	X	X			Outside Drainage Sump Cluster 1
29	SS39-DPT-14B	11/7/2010	1710		X	SO	SS39-DPT-14, Depth 8	5	X	X	X	X			Outside Drainage Sump Cluster 1
30	SS39-DPT-14C	11/7/2010	~~1517~~ 1715		X	SO	SS39-DPT-14, Depth 11	6	X	X	X	X			Outside Drainage Sump Cluster 1
31	SS39-DPT-DUP01	11/6/2010	1450		X	SO	SS39-DPT-07, Depth 11	6	X	X	X	X			Field Duplicate
32	SS39-DPT-DUP02	11/6/2010	1635		X	SO	SS39-DPT-10, Depth 11	6	X	X	X	X			Field Duplicate
33	SS39-DPT-DUP03	11/7/2010	1700		X	SO	SS39-DBT-14, Depth 4	5	X	X	X	X			Field Duplicate
34	SS39-DPT-12C-MS/MSD	11/7/2010	1625		X	SO	SS39-DPT-12, Depth 11	11	X	X	X	X			MS/MSD
35	SS39-TB-11082010-A	11/8/2010	1145		X	WQ	Trip Blank	3	X	X					

	~~010-B~~	~~11/8/2010~~	~~1145~~		~~X~~	~~WQ~~	~~Trip Blank~~	~~3~~	~~X~~	~~X~~					
	~~11082010-C~~	~~11/8/2010~~	~~1145~~		~~X~~	~~WQ~~	~~Trip Blank~~	~~3~~	~~X~~	~~X~~					
	~~9-TB-11082010-D~~	~~11/8/2010~~	~~1145~~		~~X~~	~~WQ~~	~~Trip Blank~~	~~3~~	~~X~~	~~X~~					
39	SS39-TB-11082010-E	11/8/2010	1145		X	WQ	Trip Blank	3	X	X					
40	SD27-DPT-13A	11/5/2010	1310		X	SO	SD27-DPT-13, Depth 7.5	5	X	X	X	X	X		
41	SD27-DPT-13B	11/5/2010	1320		X	SO	SD27-DPT-13, Depth 12.5	5	X	X	X	X	X		
42	SD27-DPT-13C	11/5/2010	1340		X	SO	SD27-DPT-13, Depth 17.5	5	X	X	X	X	X		
43	SD27-ER-11052010	11/5/2010			X	WB	Equipment Rinse Blank	11	3	3	2	1	2		
44	SS39-TCLP-SUMP2	11/6/2010	1830	X		SO	SS39-Sump Cluster 2	1						X	TCLP Pb
45	SS39-TCLP-SUMP1	11/7/2010	1720	X		SO	SS39-Sump Cluster 1	1						X	TCLP Pb
46	SS39-IGN	11/7/2010	1720	X		SO	SS39-Sumps	1							Ignitability

Transfers Relinquished By (Signature)	Date/Time	Transfers Accepted By (Signature)	Date/Time	Special Instructions:
	11/8/2010 11:45			
				FedEx Airbill No.: 8731 1064 7112
		Laboratory		Sampler's Signature

TAT: _____ Standard _____ Rush Due: _____ Seals Intact? _____ Y _____ N Received Good Condition _____ Y _____ N _____ Cold

Tetra Tech, Inc.
800 Oak Ridge Turnpike, Ste A-500
Oak Ridge, TN 37830
865/283-9900

CHAIN-OF-CUSTODY

Laboratory Name: **Accutest Laboratories** Address: **4405 Vineland Rd. Suite C-15 Orlando, FL 32811** Contact: **Sue Bell (813/741-3338)**

Project Name **Holloman AFB, SS39** Project Location **Holloman AFB, New Mexico**

Project No. **100-TEN-T93002-1** Project Contact **Maureen McMyler** Site Telephone No. **865-621-8754**

Report to: Maureen McMyler 800 Oak Ridge Turnpike 865/535-2030

Bill to: Sheila Hall, 800 Oak Ridge Turnpike 865/283-9900

Project Manager/Supervisor **Mike Higgins**

Item No.	Sample Number	Date	Time	Comp	Grab	Matrix	Sample Description, Location	Number of Containers	VOCs by SW8260B	TPH-GRO by SW8015B	TPH-DRO by 8015BModified	RCRA Metals by SW6010B/ SW7471A		Notes
1	SS39-DPT-01A	11/8/2010	1320		X	SO	SS39-DPT-01, Depth 1	5	X	X	X			Drainage Swale
2	SS39-DPT-01B	11/8/2010	1330		X	SO	SS39-DPT-01, Depth 3	5	X	X	X			Drainage Swale
3	SS39-DPT-01C	11/8/2010	1345		X	SO	SS39-DPT-01, Depth 7	5	X	X	X			Drainage Swale
4	SS39-DPT-02A	11/8/2010	1215		X	SO	SS39-DPT-02, Depth 1	5	X	X	X			Drainage Swale
5	SS39-DPT-02B	11/8/2010	1215		X	SO	SS39-DPT-02, Depth 3	5	X	X	X			Drainage Swale
6	SS39-DPT-02C	11/8/2010	1305		X	SO	SS39-DPT-02, Depth 7	5	X	X	X			Drainage Swale
7	SS39-DPT-03A	11/8/2010	1140		X	SO	SS39-DPT-03, Depth 1	5	X	X	X			Drainage Swale
8	SS39-DPT-03B	11/8/2010	1145		X	SO	SS39-DPT-03, Depth 3	5	X	X	X			Drainage Swale
9	SS39-DPT-03C	11/8/2010	1150		X	SO	SS39-DPT-03, Depth 7	5	X	X	X			Drainage Swale
10	SS39-DPT-04A	11/8/2010	1100		X	SO	SS39-DPT-04, Depth 1	5	X	X	X			Drainage Swale
11	SS39-DPT-04B	11/8/2010	1110		X	SO	SS39-DPT-04, Depth 3	5	X	X	X			Drainage Swale
12	SS39-DPT-04C	11/8/2010	1125		X	SO	SS39-DPT-04, Depth 7	5	X	X	X			Drainage Swale
13	SS39-DPT-15A	11/8/2010	920		X	SO	SS39-DPT-15, Depth 4	6	X	X	X	X		Outside Drainage Sump Cluster 1
14	SS39-DPT-15B	11/8/2010	935		X	SO	SS39-DPT-15, Depth 8	6	X	X	X	X		Outside Drainage Sump Cluster 1
15	SS39-DPT-15C	11/8/2010	950		X	SO	SS39-DPT-15, Depth 11	6	X	X	X	X		Outside Drainage Sump Cluster 1
16	SS39-DPT-16A	11/8/2010	1015		X	SO	SS39-DPT-16, Depth 4	6	X	X	X	X		Outside Drainage Sump Cluster 1
17	SS39-DPT-16B	11/8/2010	1020		X	SO	SS39-DPT-16, Depth 8	6	X	X	X	X		Outside Drainage Sump Cluster 1
18	SS39-DPT-16C	11/8/2010	1030		X	SO	SS39-DPT-16, Depth 11	6	X	X	X	X		Outside Drainage Sump Cluster 1
19	SS39-DPT-DUP04	11/8/2010	1150		X	SO	SS39-DPT-03C	5	X	X	X	X		DUP
20	SS39-DPT-DUP05	11/8/2010	1320		X	SO	SS39-DPT-01A	5	X	X	X	X		DUP
21	SS39-DPT-MS-01C	11/8/2010	1345		X	SO	SS39-DPT-01C	5	X	X	X	X		MS
22	SS39-DPT-MSD-01C	11/8/2010	1345		X	SO	SS39-DPT-01C	5	X	X	X	X		MSD
23	SS39-TB-11082010-B	11/8/2010	1515		X	WQ	Trip Blank	3	X	X				
24	SS30-TB-11082010-C	11/8/2010	1515		X	WQ	Trip Blank	3	X	X				

Transfers Relinquished By (Signature)	Date/Time	Transfers Accepted By (Signature)	Date/Time	Special Instructions:
				FedEx Airbill No.:
		Laboratory		Sampler's Signature

TAT: ____ Standard ____ Rush Due: _____ Seals Intact? ____Y____N Received Good Condition ____Y____N____Cold

Tetra Tech, Inc.
800 Oak Ridge Turnpike, Ste A-500
Oak Ridge, TN 37830
865/283-9900

CHAIN-OF-CUSTODY

Laboratory Name: **Accutest Laboratories** Address: **4405 Vineland Rd. Suite C-15 Orlando, FL 32811** Contact: **Sue Bell (813/741-3338)**

Project Name: Holloman AFB, SD27 | Project Location: **Holloman AFB, New Mexico**

Project No.: 100-TEN-T93002-1 | Project Contact: **Maureen McMyler** | Site Telephone No.: **865/621-8754**

Report to: Maureen McMyler 800 Oak Ridge Turnpike 865/535-2030

Bill to: Sheila Hall, 800 Oak Ridge Turnpike 865/283-9900

Project Manager/Supervisor: **Mike Higgins**

Analysis and Method Desired

Item No.	Sample Number	Date	Time	Comp	Grab	Matrix	Sample Description, Location	Number of Containers	VOCs by SW8260B	TPH-GRO by SW8015B	Dry Weight Calculation	TPH-DRO by 8015BModified	RCRA Metals by SW6010B/ SW7471A	VOCs by SW8260B	SVOCs by SW8270C	TPH-DRO by 8015BModified	TPH-GRO by SW8015B	RCRA Metals by SW6010B/ SW7471A, Total	RCRA Metals by SW6010B/ SW7471A, Dissolved	TDS by 2540C	Notes
1	SS39-DPT-05A	11/10/2010	1655		X	SO	SS39-DPT-05 Depth:4	5	X	X	X										
2	SS39-DPT-05B	11/10/2010	1700		X	SO	SS39-DPT-05 Depth:8	5	X	X	X										
3	SS39-DPT-05C	11/10/2010	1705		X	SO	SS39-DPT-05 Depth:11	5	X	X	X										
4	SS39-DPT-06A	11/10/2010	1735		X	SO	SS39-DPT-06 Depth:4	5	X	X	X										
5	SS39-DPT-06B	11/10/2010	1740		X	SO	SS39-DPT-06 Depth:8	5	X	X	X										
6	SS39-DPT-06C	11/10/2010	1745		X	SO	SS39-DPT-06 Depth:11	5	X	X	X										
7	SS39-DPT-07A	11/11/2010	750		X	SO	SS39-DPT-07 Depth:4	5	X	X	X										
8	SS39-DPT-07B	11/11/2010	755		X	SO	SS39-DPT-07 Depth:8	5	X	X	X										
9	SS39-DPT-07C	11/11/2010	800		X	SO	SS39-DPT-07 Depth:11	5	X	X	X										
10	SS39-DPT-08A	11/11/2010	825		X	SO	SS39-DPT-08 Depth:4	5	X	X	X										
11	SS39-DPT-08B	11/11/2010	830		X	SO	SS39-DPT-08 Depth:8	5	X	X	X										
12	SS39-DPT-08C	11/11/2010	835		X	SO	SS39-DPT-08 Depth:11	5	X	X	X										
13	SS39-DPT-09A	11/11/2010	850		X	SO	SS39-DPT-09 Depth:4	5	X	X	X										
14	SS39-DPT-09B	11/11/2010	855		X	SO	SS39-DPT-09 Depth:8	5	X	X	X										
15	SS39-DPT-09C	11/11/2010	900		X	SO	SS39-DPT-09 Depth:11	5	X	X	X										
16	SS39-DPT-10A	11/11/2010	905		X	SO	SD27-DPT-10 Depth:4	5	X	X	X										
17	SS39-DPT-10B	11/11/2010	910		X	SO	SS39-DPT-10 Depth:8	5	X	X	X										
18	SS39-DPT-10C	11/11/2010	915		X	SO	SS39-DPT-10 Depth:11	5	X	X	X										
19	SS39-DPT-11A	11/11/2010	1000		X	SO	SD27-DPT-11 Depth:4	5	X	X	X										
20	SS39-DPT-11B	11/11/2010	1005		X	SO	SS39-DPT-11 Depth:8	5	X	X	X										
21	SS39-DPT-11C	11/11/2010	1010		X	SO	SS39-DPT-11 Depth:11	5	X	X	X										
22	SS39-DPT-12A	11/11/2010	1015		X	SO	SD27-DPT-12 Depth:4	5	X	X	X										
23	SS39-DPT-12B	11/11/2010	1020		X	SO	SS39-DPT-12 Depth:8	5	X	X	X										
24	SS39-DPT-12C	11/11/2010	1025		X	SO	SS39-DPT-12 Depth:11	5	X	X	X										
25	SS39-DPT-13A	11/11/2010	1040		X	SO	SD27-DPT-13 Depth:4	5	X	X	X										
26	SS39-DPT-13B	11/11/2010	1045		X	SO	SS39-DPT-13 Depth:8	5	X	X	X										
27	SS39-DPT-13C	11/11/2010	1050		X	SO	SS39-DPT-13 Depth:11	5	X	X	X										
28	SS39-DPT-14A	11/11/2010	1100		X	SO	SD27-DPT-14 Depth:4	5	X	X	X										
29	SS39-DPT-14B	11/11/2010	1105		X	SO	SS39-DPT-14 Depth:8	5	X	X	X										
30	SS39-DPT-14C	11/11/2010	1110		X	SO	SS39-DPT-14 Depth:11	5	X	X	X										
31	SS39-DPT-DUP01	11/11/2010	800		X	SO	SS39-DPT-07 Depth:11	5	X	X	X										
32	SS39-DPT-DUP02	11/11/2010	915		X	SO	SS39-DPT-10 Depth:11	5	X	X	X										
33	SS39-DPT-DUP03	11/11/2010	1100		X	SO	SS39-DPT-14 Depth:4	5	X	X	X										
34	SS39-DPT-MS-12C	11/11/2010	1025		X	SO	SS39-DPT-MS-12 Depth:11	5	X	X	X										Matrix Spike
35	SS39-DPT-MSD-12C	11/11/2010	1025		X	SO	SS39-DPT-MSD-12 Depth:11	5	X	X	X										Matrix Spike Duplicate
36	SS39-TB-11112010-A	11/11/2010	1230		X	WQ	SS39-TB-11112010-A	4	X	X											
37	SS39-TB-11112010-B	11/11/2010	1230		X	WQ	SS39-TB-11112010-B	4	X	X											
38	SD27-TTMW-05	11/11/2010	850		X	GW	SD27-TTMW-05	13						X	X	X	X	X	X	X	
39	SD27-TTMW-01	11/11/2010	1005		X	GW	SD27-TTMW-01	13						X	X	X	X	X	X	X	
40	SD27-TTMW-MS-01	11/11/2010	1005		X	GW	SD27-TTMW-MS-01	13						X	X	X	X	X	X	X	Matrix Spike
41	SD27-TTMW-MSD-01	11/11/2010	1005		X	GW	SD27-TB-MSD-01	13						X	X	X	X	X	X	X	Matrix Spike Duplicate
42	SD27-TB-11112010-C	11/11/2010			X	WQ	027-TB-11112010-D	2	X	X											
43	SD27-TB-11102010-D	11/11/2010			X	WQ	SD27-TB-11112010-E	2	X	X											

Transfers Relinquished By (Signature)	Date/Time	Transfers Accepted By (Signature)	Date/Time
[signature]	11/11/10 1500		
		Laboratory	

Special Instructions:

FedEx Airbill No.:

Sampler's Signature: [signature]

TAT: X Standard ____ Rush Due: _____ Seals Intact? ____ Y ____ N Received Good Condition ____ Y ____ N ____ Cold

Well Development Log

Project Number: 100-TEN-T93002-1
Project Name: Holloman AFB
Form Completed by: B. Clowers
Development Company: Tetra Tech

Well No: MW39 - 13 ~~MW13~~ Bc
Site Name: SS-39
Date Started: 1/27/11

Monitoring Well Information

Development Method: Surge/Purge
Development Equipment: Teflon bailer

Screen Length (ft): 5.0
Filter Pack Length (ft): 6.0
Casing Diameter (in): 2.0

Beginning Measurements
Depth to Water (ft): 5.48
Total Depth of Well (ft): 7.21

Monitoring Well Purge Calculations

Volume of Water in Casing:
Gallons/foot = 0.041 x d^2, where casing diameter in inches = (0.041 x (2)^2) = 0.164 gal/ft.
Well Volume (gallons) = Water Column (ft) x Gal/ft = 1.73 ft x 0.164 gal/ft = 0.284 gallons

Volume of Water in Filter Pack: 10.56 - 4 = 6.56
Gallons/foot = 0.041 x (D^2 - d^2), where D is total borehole diameter in inches & d is casing diameter in inches = 0.041 x ((3.25)^2 - (2)^2) = gal/ft. 0.269
Filter Pack Volume (gal) = ((lesser of screen length+2 feet OR water column) x gal/ft) x porosity (0.3) = (1.73) ft x (0.269) gal/ft) x 0.3 = 0.14 gal.

Purge Well Volume:
Purge well Volume = Filter pack volume + Well Volume = 0.284 gal + 0.14 gal = 0.424 gal.

1 x Purge Well Volume	2 x Purge Well Volume	3 x Purge Well Volume	4 x Purge Well Volume	5 x Purge Well Volume
0.424	0.848	1.272	1.696	2.12

Development Record

	Time (24 hours)	Purge Volume (gal)	Water Level (ft) (TOC)	ORP (mV)	pH (Std Units)	Conductivity (mS/cm)	Turbidity (NTU)	DO (ppm)	Temp. (C)	Clarity (color)	Comments
											SAL
1/27	1330	—	5.48	—	—	—	—	—	—	cloudy	Surged ~10 mins/Not to silty
	1350	1.25	DRY	—	—	—	—	—	—	Cloudy	purged dry
1/28	1015	—	5.64	126	6.86	22.5	10.3	1.87	14.81	clear	1.4
	1030	2.0	DRY	111	7.07	—	44.1	Ø	16.61	Clear	4.0 recharges fast.
	1040	Sample taken at 1040									

Well Development Log

Page 1 of

Well No: MW 39-14
Site Name: SS-39
Date Started: 1/25/11

MW14
TD = 22.20

Top of protective casing

Development Record (continuation)

	Time (24 hrs)	Purge Volume ~~(gal)~~	Water Level (ft BTOC)	ORP (mV)	pH (Std)	Conductivity (mS/cm)	Turbidity (NTU)	DO (ppm)	Temp. (C)	Clarity (color)	Comments	
1/25	0950	—	14.71								Surge well for 30 mins	
		—									with bailer,	
	1020	~~6~~.0 G									~7 gal purged from well,	
1/26	1345		14.29								did not go dry, let sit	
	1355	—	restart purge								surge for ten mins	
		~~9.0~~										
	1425	10.0 G										
1/27	935	~~3~~ —	14.72									
	~~940~~ 1010	∅	Begin purge									SAL
	1015	0.750 L	14.91	126	7.82	22.6	589.0	8.32	19.14	cloudy	Rate = 150 ml/min	1.41
	1020	1.50 L	14.91	126	7.83	23.7	863.0	7.69	19.33	cloudy	150 ml/min	1.43
	1025	2.50 L	14.92	128	7.86	25.0	809.0	8.62	19.39	cloudy	200 ml/min	1.53
	1030	3.50 L	14.94	128	7.85	24.8	732.0	8.33	19.51	cloudy	200 ml/min	1.52
	1035	4.50 L	14.95	128	7.84	24.9	639.0	8.04	19.74	cloudy	200 ml/min	1.52
	1040	5.50 L	14.95	129	7.83	24.9	485.0	8.06	19.64	cloudy	200 ml/min	1.53
	1045	6.50 L	14.97	125	7.84	25.0	430.0	7.89	19.58	cloudy	200 ml/min	1.52
	1050	7.50 L	14.98	103	7.84	24.9	487.0	8.35	19.73	cloudy	200 ml/min	1.52
	1055	8.50 L	14.98	96	7.84	24.9	431.0	8.18	19.73	cloudy	200 ml/min	1.52
	1100	8.50	14.99	95	7.84	24.8	393.0	8.11	19.71		200 ml/min	1.52

Range and Average Discharge Rate:
Maximum Drawdown during Development: at gpm.
Disposition of Development Water: ~~Drums~~ Frac Tank Other
Number of Containers for Development Water: None, poured on ground

Comments: Sample time - 1130

Final Measurements

Total Depth of Well (ft):

Date Completed: 1/25/11

Hours Developed:

Well Development Log

Project Number: 100-TEN-T93002-1
Project Name: Holloman AFB
Form Completed by: B. Clowers
Development Company: Tetra Tech

Well No: MW39-15
Site Name: SS-39
Date Started: 1-27-11

Monitoring Well Information

Development Method: Surge/Purge
Development Equipment: teflon bailer/ Geopump

Screen Length (ft): 10.0
Filter Pack Length (ft): 11.0
Casing Diameter (in): 2.0

Beginning Measurements
Depth to Water (ft): 14.04
Total Depth of Well (ft): 21.73

Monitoring Well Purge Calculations

Volume of Water in Casing:
Gallons/foot = 0.041 x d^2, where casing diameter in inches = (0.041 x (2)^2) = 0.164 gal/ft.
Well Volume (gallons) = Water Column (ft) x Gal/ft = 7.69 ft x 0.164 gal/ft = 1.26 gallons

10.56 − 4 6.56

Volume of Water in Filter Pack:
Gallons/foot = 0.041 x (D^2 - d^2), where D is total borehole diameter in inches & d is casing diameter in inches = 0.041 x ((3.25)^2 − (2)^2) = gal/ft. 0.269
Filter Pack Volume (gal) = ((lesser of screen length+2 feet OR water column) x gal/ft) x porosity (0.3) = (7.69) ft x (0.269) gal/ft) x 0.3 = 0.62 gal.

Purge Well Volume:
Purge well Volume = Filter pack volume + Well Volume = 1.26 gal + 0.62 gal = 1.88 gal.

1 x Purge Well Volume	2 x Purge Well Volume	3 x Purge Well Volume	4 x Purge Well Volume	5 x Purge Well Volume
1.88	3.76	5.64	7.52	9.4

Development Record

	Time (24 hours)	Purge Volume (gal)	Water Level (ft) (TOC)	ORP (mV)	pH (Std Units)	Conductivity (mS/cm)	Turbidity (NTU)	DO (ppm)	Temp. (C)	Clarity (color)	Comments
1/27	1440	—								Cloudy	SAL Surge ~10 mins and hand bail.
	1500	5 gal								Cloudy	surge ~10 mins and hand bail
	1515	—								Cloudy	Purge with pump.
	1535	9 gal								clear	Cleared up
1/28	1120	—	14.43	Begin	Purge						SAL RATE
	11 30	1.0 L	14.47	117	7.27	21.3	7.6	3.86	21.84	Clear	1.3 200 ml/min
	11 35	2.0 L	14.47	117	7.31	22.2	13.8	4.04	19.99	clear	1.3 200 ml/min
	1140	3.0 L	14.48	117	7.34	22.5	14.8	4.07	19.11	clear	1.4 200 ml/min
	1145	4.0 L	14.49	116	7.35	22.6	11.3	4.04	18.97	clear	1.4 200 ml/min
	1150	5.0 L	14.49	97	7.36	22.7	11.3	4.04	18.61	clear	1.4 200 ml/min

Well Development Log

Well No: MW 39 -15
Site Name: SS39
Date Started: 1-27-91

Development Record (continuation)

Time (24 hrs)	Purge Volume (gal)	Water Level (ft BTOC)	ORP (mV)	pH (Std)	Conductivity (mS/cm)	Turbidity (NTU)	DO (ppm)	Temp. (C)	Clarity (color)	Comments SAL	Comments RATE ml/min
1155	6.0L	14.51	89	7.36	22.7	6.7	3.93	18.80	Clear	1.4	200
1200	7.0L	14.50	91	7.36	23.1	8.1	4.07	18.40	Clear	1.4	200
1205	8.0L	14.51	94	7.37	23.5	7.4	4.21	17.17	Clear	1.4	200
1210	9.0L	14.51	98	7.36	23.9	5.7	4.37	14.41	Clear	1.5	200
1215	10.0L	14.52	101	7.36	24.8	4.2	4.75	13.45	Clear	1.5	200
1220	11.0L	14.51	103	7.38	25.6	4.9	4.91	13.46	Clear	1.5	200
1225	12.0L	14.52	106	7.38	25.9	4.4	5.04	13.31	Clear	1.6	200
1230	13.0L	14.52	108	7.39	26.2	4.0	4.95	12.67	Clear	1.6	200
1235	14.0L	14.51	112	7.39	26.5	2.3	5.04	12.31	Clear	1.6	200
1240	15.0L	14.52	114	7.39	26.7	1.3	4.99	11.96	Clear	1.6	200
1245	16.0L	14.53	115	7.39	26.8	2.5	5.08	11.91	Clear	1.6	200

Range and Average Discharge Rate: _____
Maximum Drawdown during Development: _____ at _____ gpm.
Disposition of Development Water: Drums Frac Tank Other
Number of Containers for Development Water: _____

Comments: _____

Final Measurements

Total Depth of Well (ft): _____

Date Completed: _____

Hours Developed: _____

Sample Collection Log

Project Name: Holloman AFB
Project Number: T93002-1 Task 11.06.02
Investigation Site: SD-39 Missile Fuel Spill Area (SWMUs 165,177,179, & 181)

Collection Date: 11/8/10
Collection Time: 1330
COC Number: NA

Sample Number: SS39-DPT-01B

Soil Samples
Sample Interval bgs (ft): 3.0-5.0
Headspace Reading (ppm): Ø
Purpose: (Chemical) Geotechnical
Sample Composited after VOC Collection: (YES) NO

Sample Analytical Parameter	Analytical Method
VOC's	SW 8260B
TPH-GRO	SW 8015 B
TPH-DRO	8015 B Modified

Collected by: J. Bennett ; B. Clowers
Logged by: J. Bennett
Reviewed by: B. Clowers

DESCRIPTION:
Sample taken at SS-39 Drainage Swale.

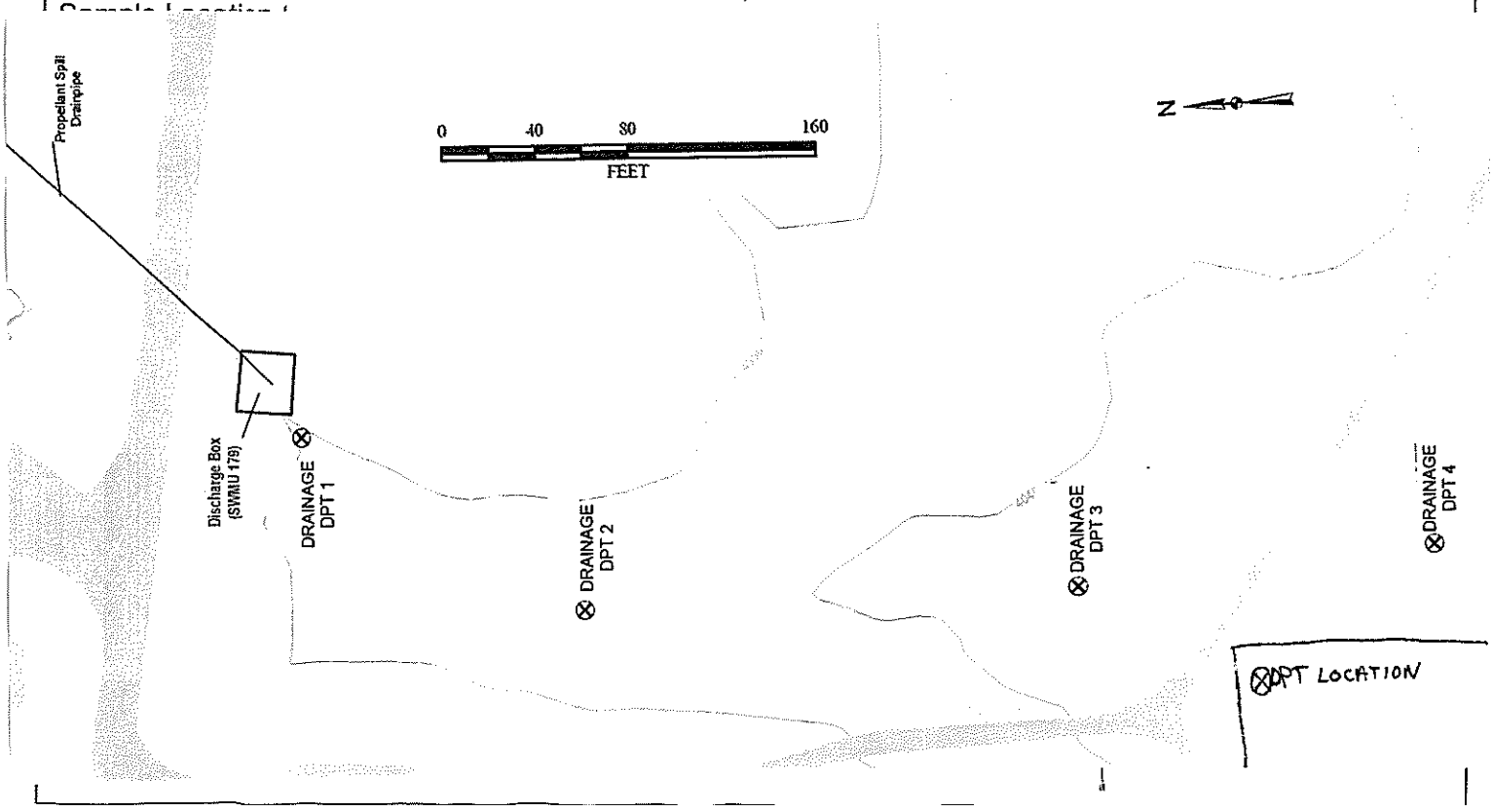

Sample Collection Log

Project Name: Holloman AFB
Project Number: T93002-1 Task 11.06.02
Investigation Site: SD-39 Missile Fuel Spill Area (SWMUs 165,177,179, & 181)

Collection Date: 11/8/10
Collection Time: 1345
COC Number: NA

Sample Number: SS39-DPT-01C

Soil Samples
Sample Interval bgs (ft): 7.5 - 9.5
Headspace Reading (ppm): 0.1
Purpose: **Chemical** **Geotechnical**
Sample Composited after VOC Collection: **YES** **NO**

Sample Analytical Parameter	Analytical Method
VOC's	SW 8260B
TPH-GRO	SW 8015 B
TPH-DRO	8015 B Modified

Collected by: J. Bennett ; B. Clowers
Logged by: J. Bennett
Reviewed by: B. Clowers

DESCRIPTION:
Sample taken at SS-39 Drainage Swale.

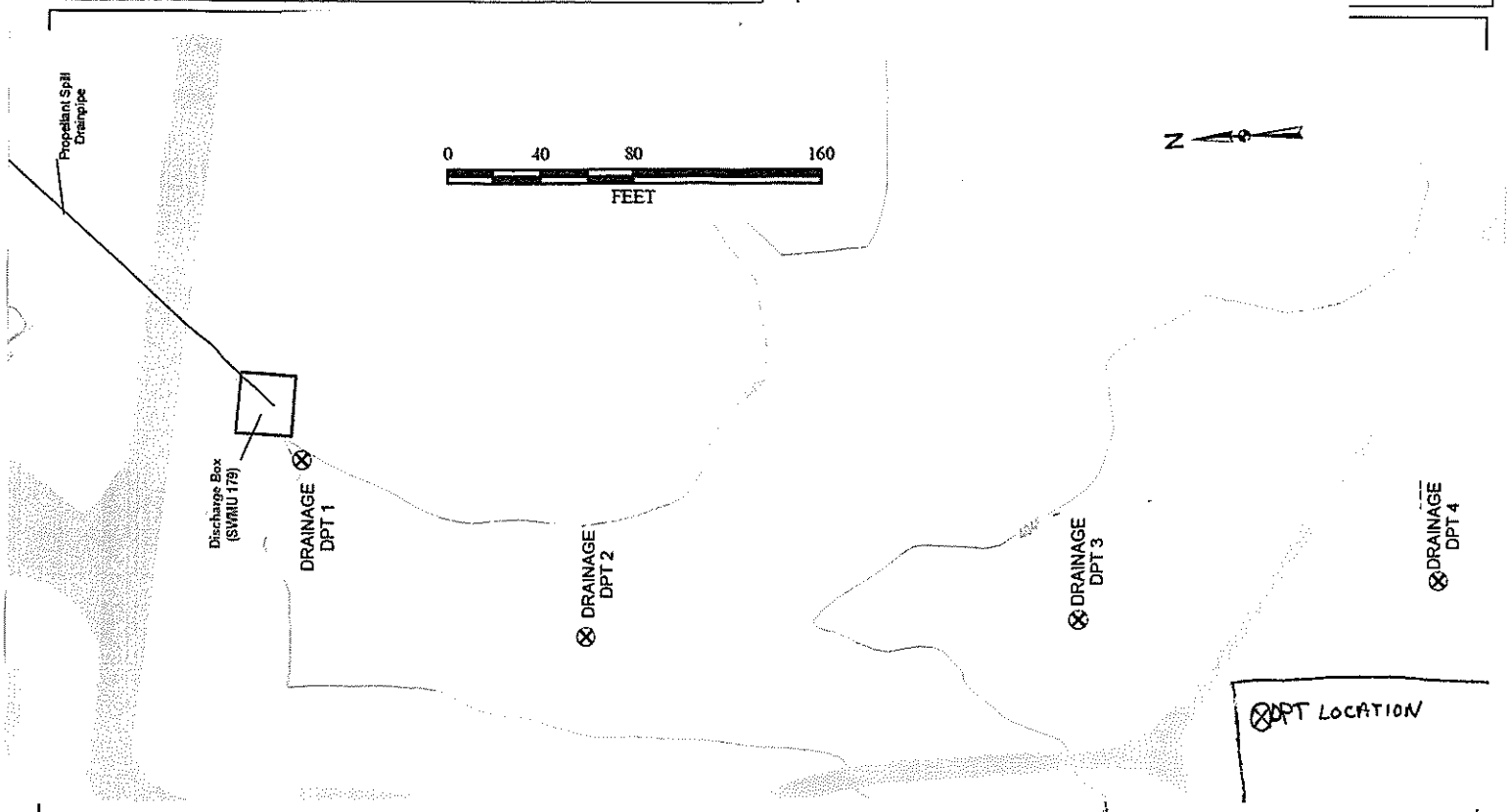

Sample Collection Log

Project Name: Holloman AFB
Project Number: 793002-1 Task 11.06.02
Investigation Site: SD-39 Missile Fuel Spill Area (SWMUs 165,177,179, & 181)

Collection Date: 11/8/10
Collection Time: 1215
COC Number: NA

Sample Number: SS39-DPT-02A

Soil Samples
Sample Interval bgs (ft): 0-2.0
Headspace Reading (ppm): 0
Purpose: **Chemical** **Geotechnical**
Sample Composited after VOC Collection: **YES** **NO**

Sample Analytical Parameter	Analytical Method
VOC's	SW 8260B
TPH-GRO	SW 8015 B
TPH-DRO	8015 B Modified

Collected by: J. Bennett ; B. Clowers
Logged by: J. Bennett
Reviewed by: B. Clowers

DESCRIPTION:
Sample taken at SS-39 Drainage Swale.

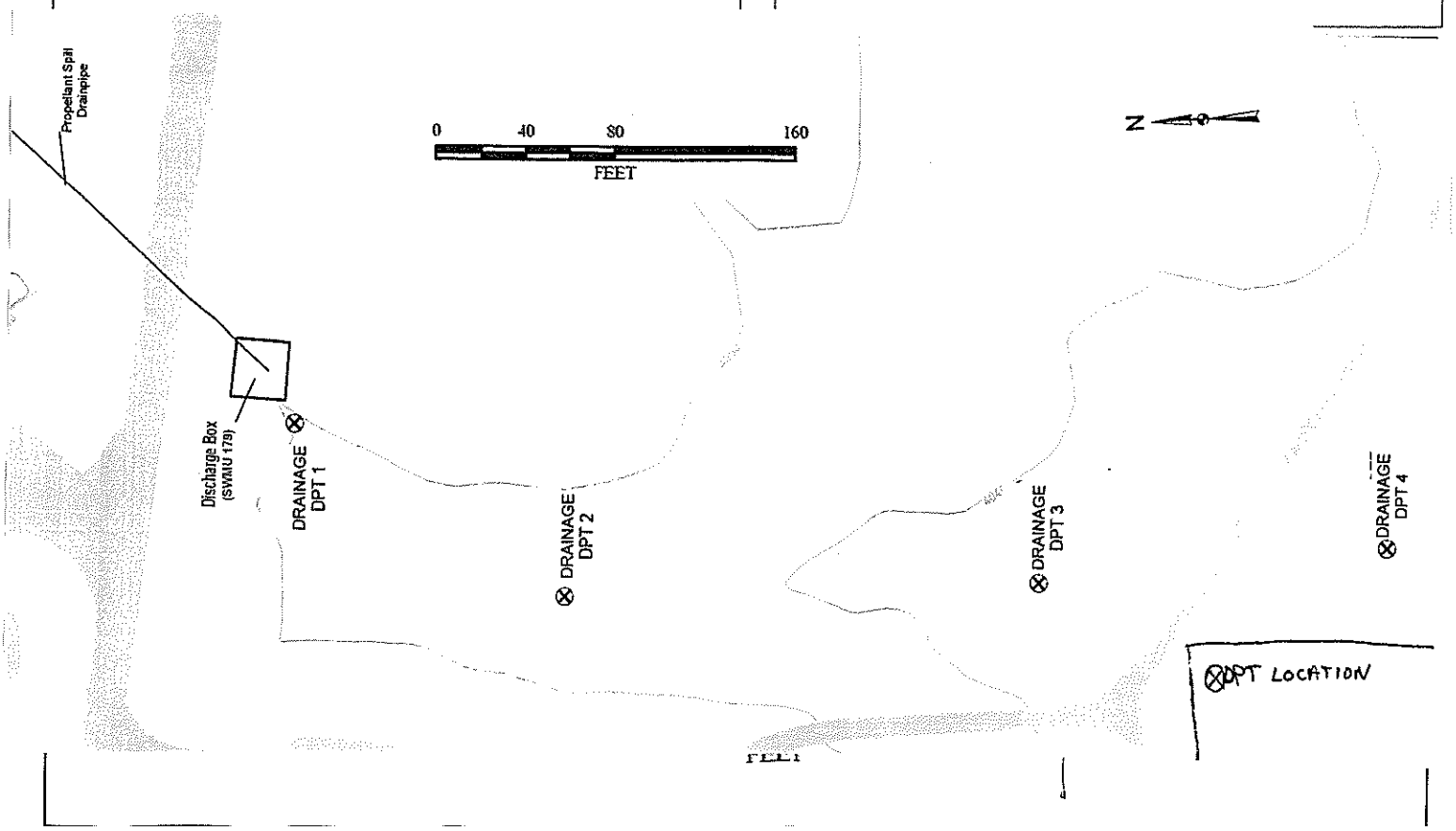

Sample Collection Log

Project Name: Holloman AFB
Project Number: T93002-1 Task 11.06.02
Investigation Site: SD-39 Missile Fuel Spill Area (SWMUs 165,177,179, & 181)

Collection Date: 11/8/10
Collection Time: 1215
COC Number: NA

Sample Number: SS39-DPT-02B

Soil Samples
Sample Interval bgs (ft): 3.0-5.0
Headspace Reading (ppm): 0.1
Purpose: **Chemical** **Geotechnical**
Sample Composited after VOC Collection: **YES** **NO**

Sample Analytical Parameter	Analytical Method
VOC's	SW 8260B
TPH-GRO	SW 8015 B
TPH-DRO	8015 B Modified

Collected by: J. Bennett ; B. Clowers
Logged by: J. Bennett
Reviewed by: B. Clowers

DESCRIPTION: Sample taken at SS-39 Drainage swale.

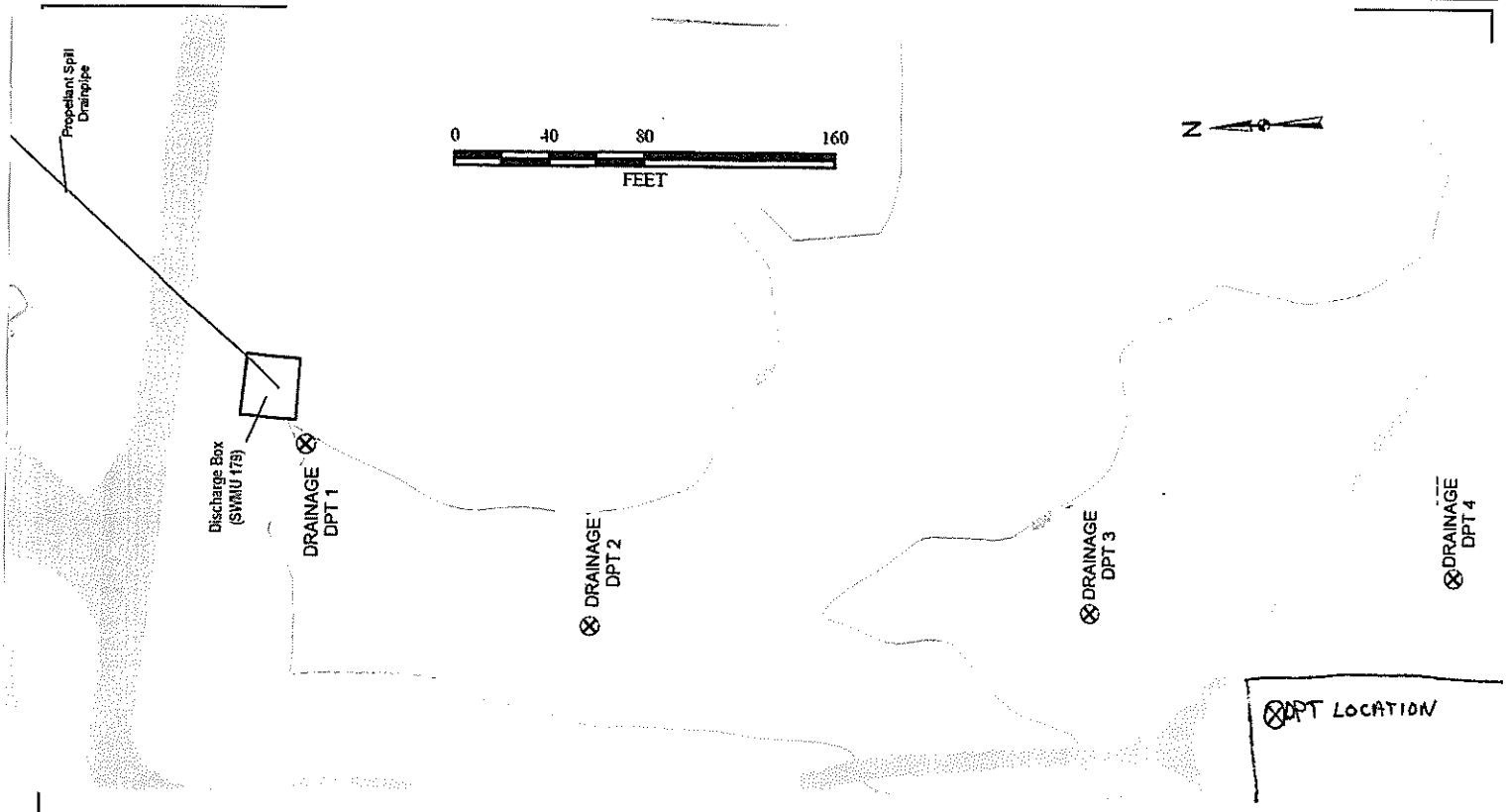

Sample Collection Log

Project Name: Holloman AFB
Project Number: T93002-1 Task 11.06.02
Investigation Site: SD-39 Missile Fuel Spill Area (SWMUs 165,177,179, & 181)

Collection Date: 11/8/10
Collection Time: 1305
COC Number: NA

Sample Number: SS39-DPT-02C

Soil Samples
Sample Interval bgs (ft): 6.0-8.0
Headspace Reading (ppm): Ø
Purpose: (Chemical) Geotechnical
Sample Composited after VOC Collection: (YES) NO

Sample Analytical Parameter	Analytical Method
VOC's	SW 8260B
TPH-GRO	SW 8015 B
TPH-DRO	8015 B Modified

Collected by: J. Bennett ; B. Clowers
Logged by: J. Bennett
Reviewed by: B. Clowers

DESCRIPTION:
Sample taken at SS-39 Draing swale.

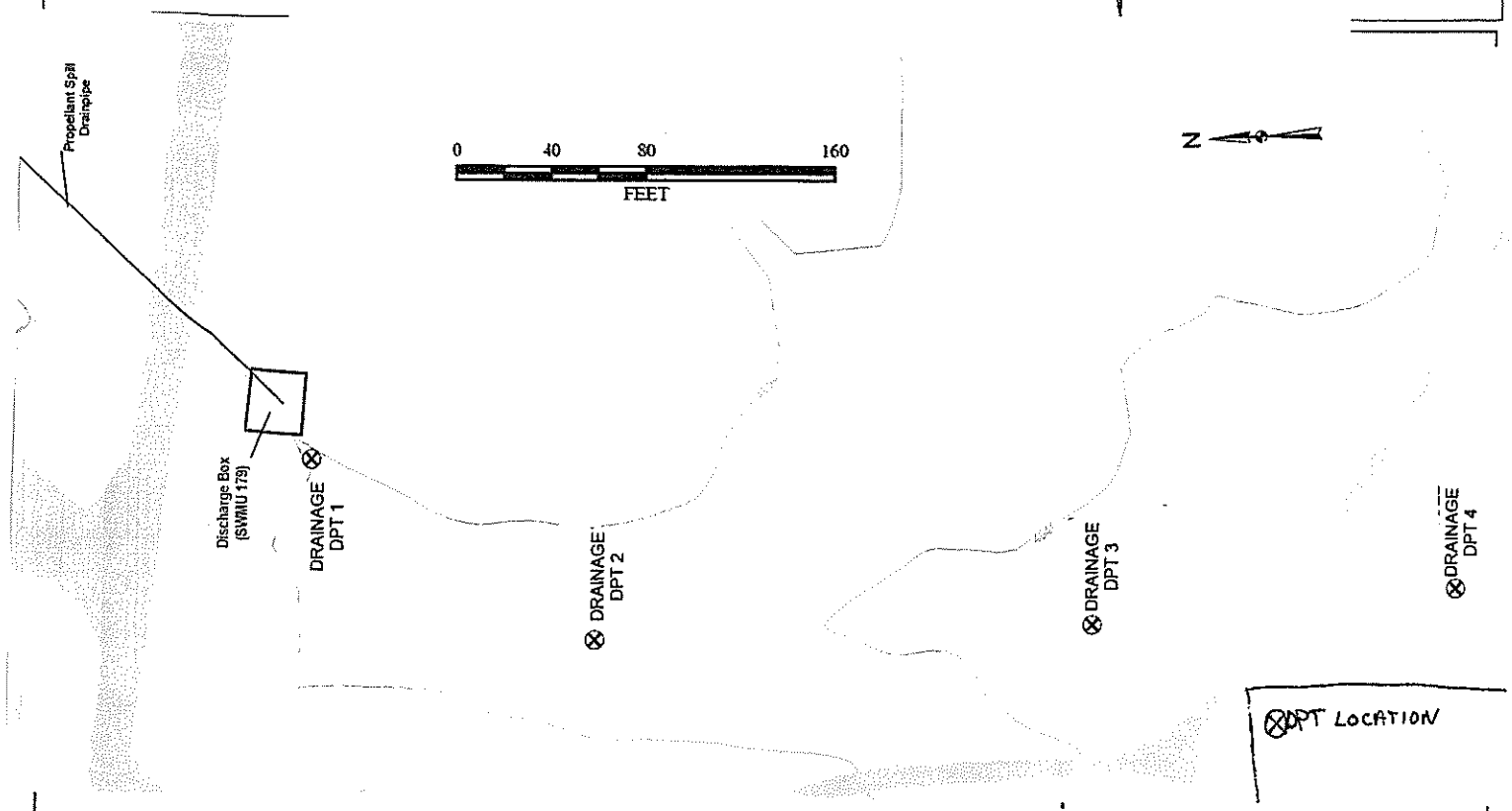

Sample Collection Log

Project Name: Holloman AFB
Project Number: T93002-1 Task 1.06.02
Investigation Site: SD-39 Missile Fuel Spill Area (SWMUs 165,177,179, & 181)

Collection Date: 11/8/10
Collection Time: 1140
COC Number: NA

Sample Number: SS39-DPT-03A

Soil Samples
Sample Interval bgs (ft): 0-2.0
Headspace Reading (ppm): Ø
Purpose: **Chemical** **Geotechnical**
Sample Composited after VOC Collection: **YES** **NO**

Sample Analytical Parameter	Analytical Method
VOC's	SW 8260B
TPH-GRO	SW 8015 B
TPH-DRO	8015 B Modified

Collected by: J. Bennett ; B. Clowers
Logged by: J. Bennett
Reviewed by: B. Clowers

DESCRIPTION: Sample taken at SS-39 Drainge swale.

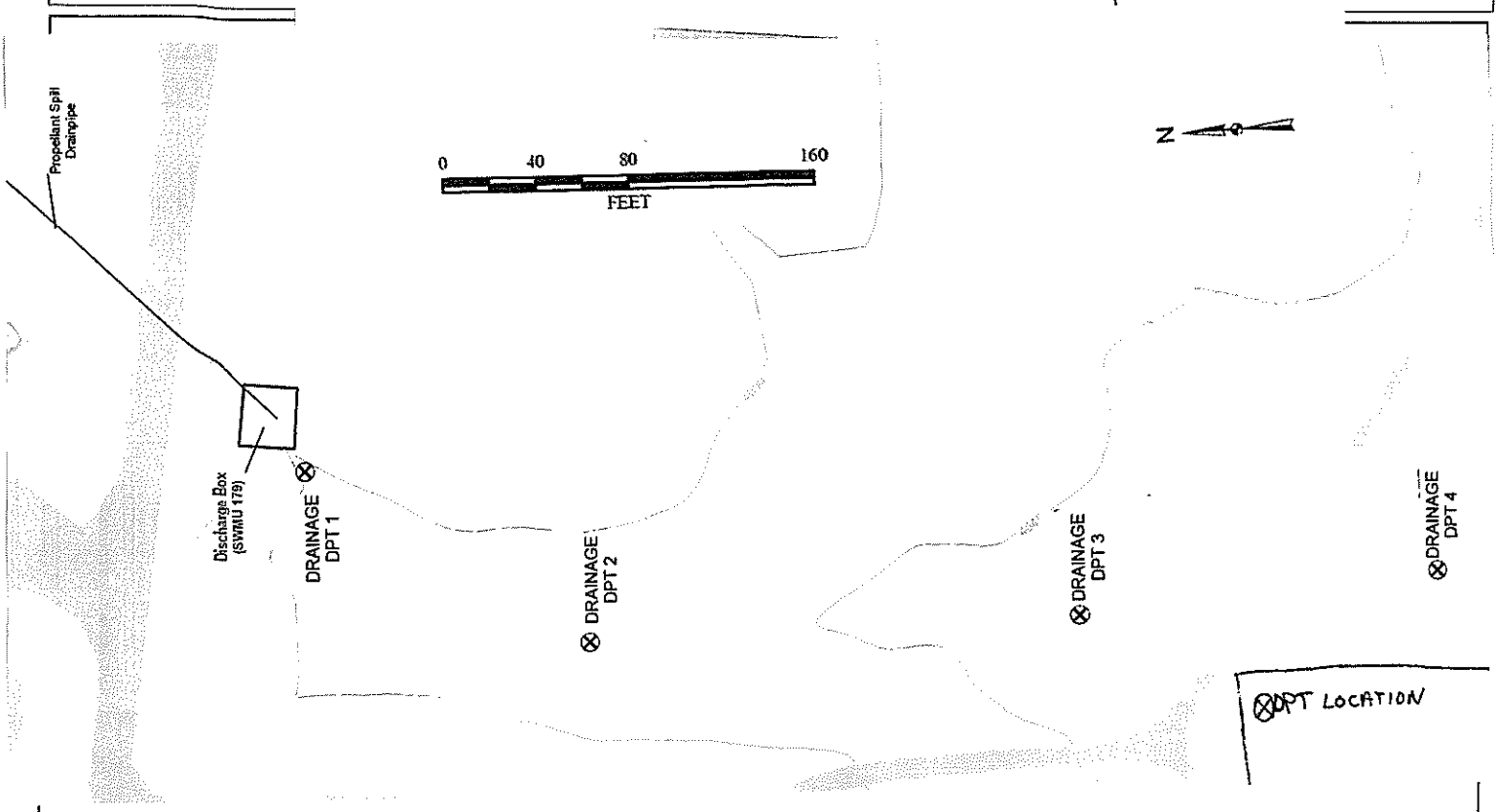

Sample Collection Log

Project Name: Holloman AFB
Project Number: T93002-1 Task 11.06.02
Investigation Site: SD-39 Missile Fuel Spill Area (SWMUs 165,177,179, & 181)

Collection Date: 11/8/10
Collection Time: 1145
COC Number: NA

Sample Number: SS39-DPT-03B

Soil Samples
Sample Interval bgs (ft): 3.0-5.0
Headspace Reading (ppm): Ø
Purpose: **Chemical** **Geotechnical**
Sample Composited after VOC Collection: **YES** **NO**

Sample Analytical Parameter	Analytical Method
VOC's	SW 8260B
TPH-GRO	SW 8015 B
TPH-DRO	8015 B Modified

Collected by: J. Bennett ; B. Clowers
Logged by: J. Bennett
Reviewed by: B. Clowers

DESCRIPTION:
Sample taken at SS-39 Drainage swale.

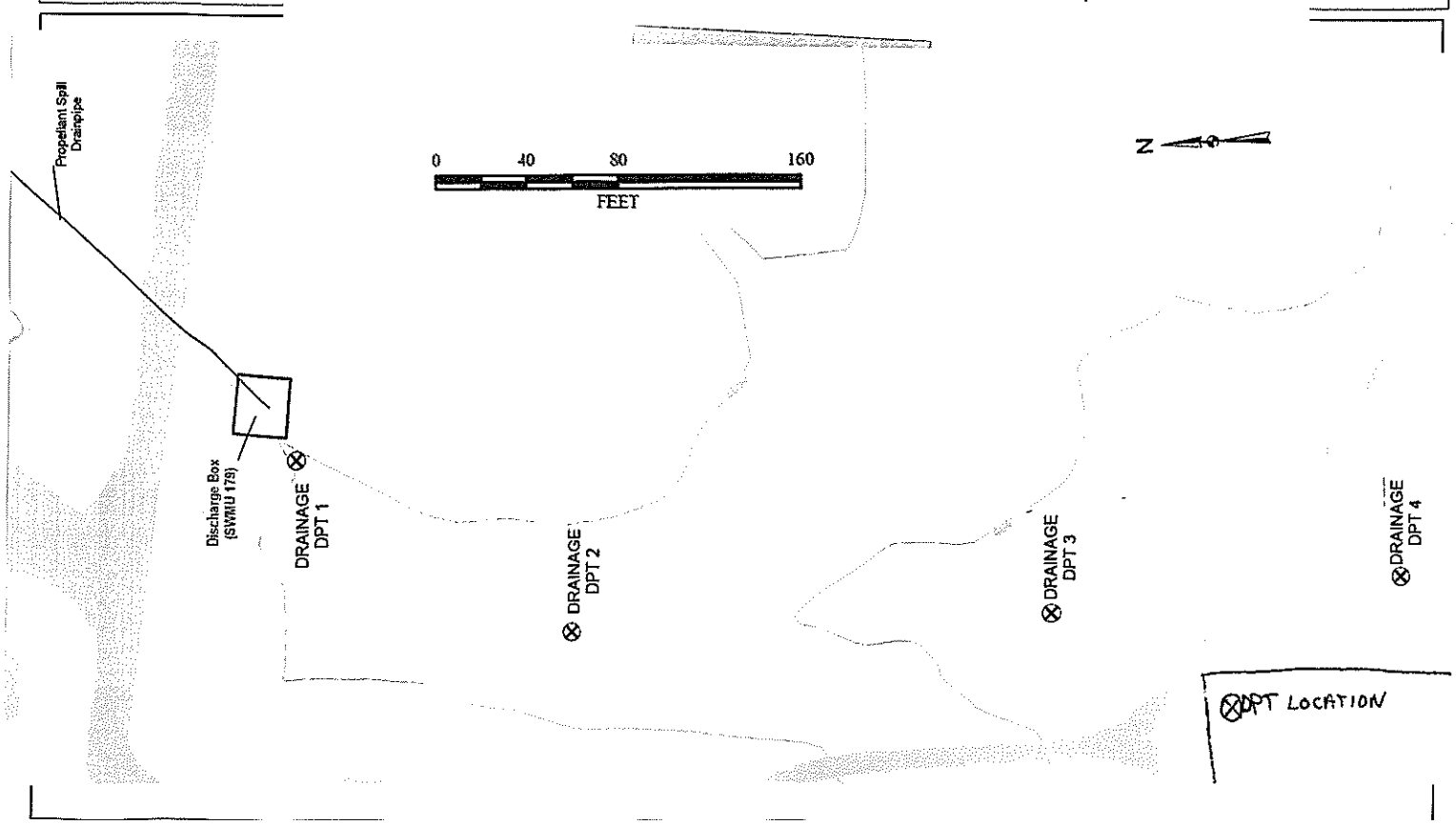

Sample Collection Log

Project Name: Holloman AFB
Project Number: T93002-1 Task 11.06.02
Investigation Site: SD-39 Missile Fuel Spill Area (SWMUs 165,177,179, & 181)

Collection Date: 11/8/10
Collection Time: 1150
COC Number: N/A

Sample Number: SS39-DPT-03C

Soil Samples
Sample Interval bgs (ft): 6.0-8.0
Headspace Reading (ppm): Ø
Purpose: **Chemical** **Geotechnical**
Sample Composited after VOC Collection: **YES** **NO**

Sample Analytical Parameter	Analytical Method
VOC's	SW 8260B
TPH-GRO	SW 8015 B
TPH-DRO	8015 B Modified

Collected by: J. Bennett ; B. Clowers
Logged by: J. Bennett
Reviewed by: B. Clowers

DESCRIPTION: Sample taken at SS-39 Drainage Swale.

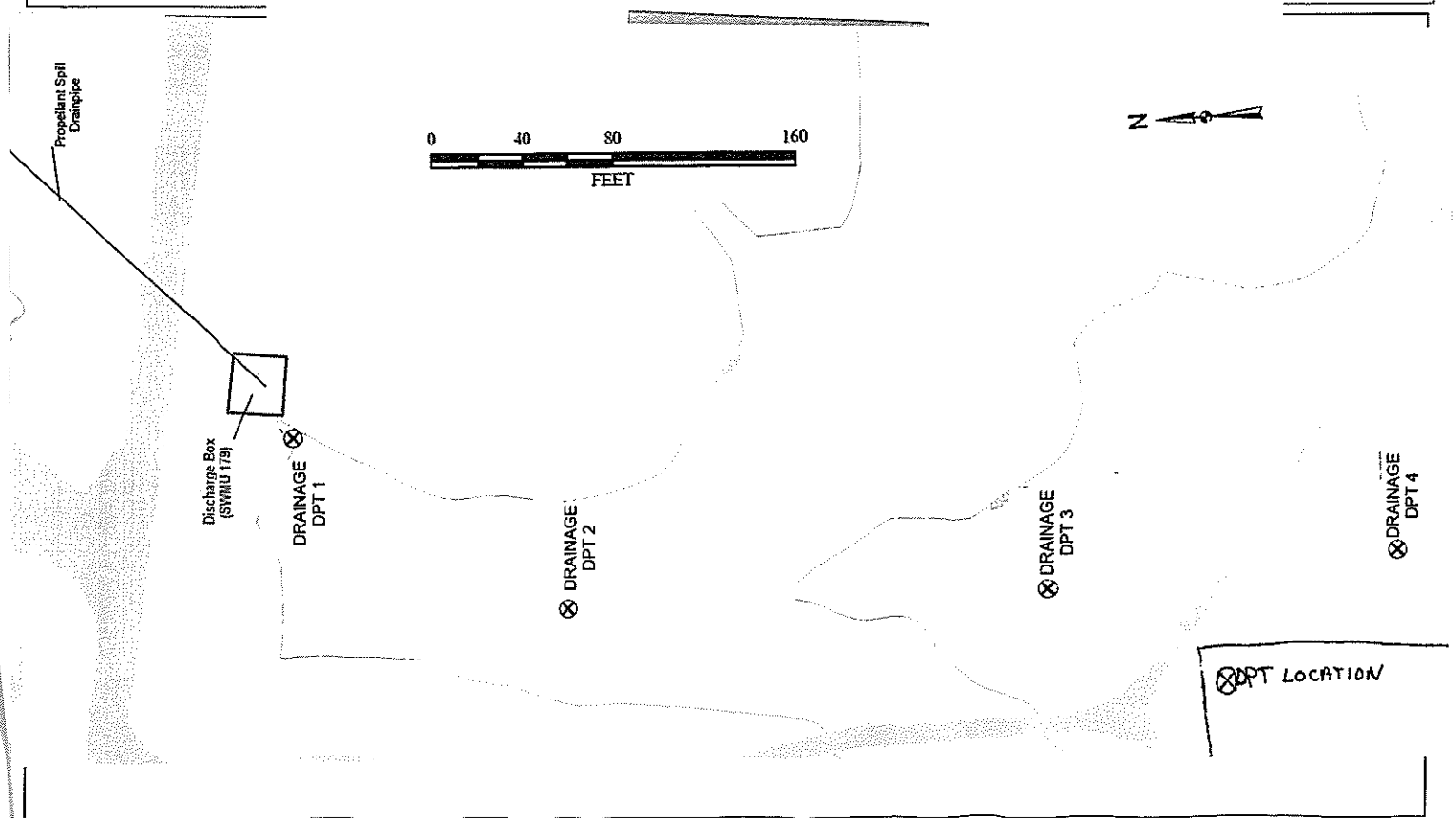

Sample Collection Log

Project Name: Holloman AFB
Project Number: T93002-1 Task 11.06.02
Investigation Site: SD-39 Missile Fuel Spill Area (SWMUs 165,177,179, & 181)

Collection Date: 11/8/10
Collection Time: 1100
COC Number: NA

Sample Number: SS39-DPT-04A

Soil Samples
Sample Interval bgs (ft): 0-2.0
Headspace Reading (ppm): Ø
Purpose: **Chemical** **Geotechnical**
Sample Composited after VOC Collection: **YES** **NO**

Sample Analytical Parameter	Analytical Method
VOC's	SW 8260B
TPH-GRO	SW 8015 B
TPH-DRO	8015 B Modified

Collected by: J. Bennett ; B. Clowers
Logged by: J. Bennett
Reviewed by: B. Clowers

DESCRIPTION:
Sample taken at SS-39 Drainage swale.

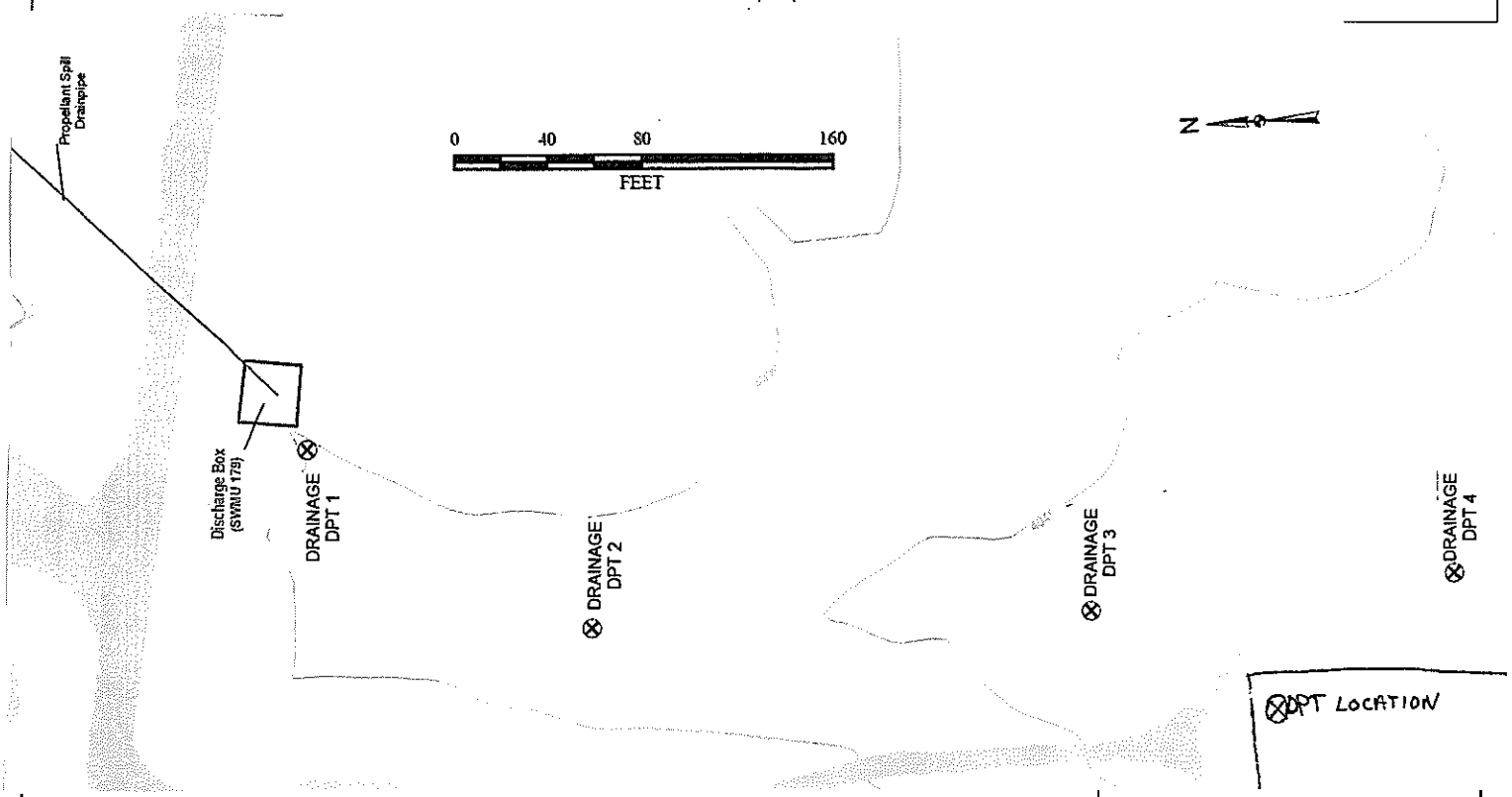

Sample Collection Log

Project Name: Holloman AFB
Project Number: T930027 TASK 11.06.02
Investigation Site: SD-39 Missile Fuel Spill Area (SWMUs 165,177,179, & 181)

Collection Date: 11/8/10
Collection Time: 1110
COC Number: NH

Sample Number: SS39-DPT-04B

Soil Samples
Sample Interval bgs (ft): 3.0-5.0
Headspace Reading (ppm): Ø
Purpose: **Chemical** **Geotechnical**
Sample Composited after VOC Collection: **YES** **NO**

Sample Analytical Parameter	Analytical Method
VOC's	SW 8260B
TPH-GRO	SW 8015 B
TPH-DRO	8015 B Modified

Collected by: J. Bennett ; B. Clowers
Logged by: J. Bennett
Reviewed by: B. Clowers

DESCRIPTION: Sample taken at SS-39 Drainage swale.

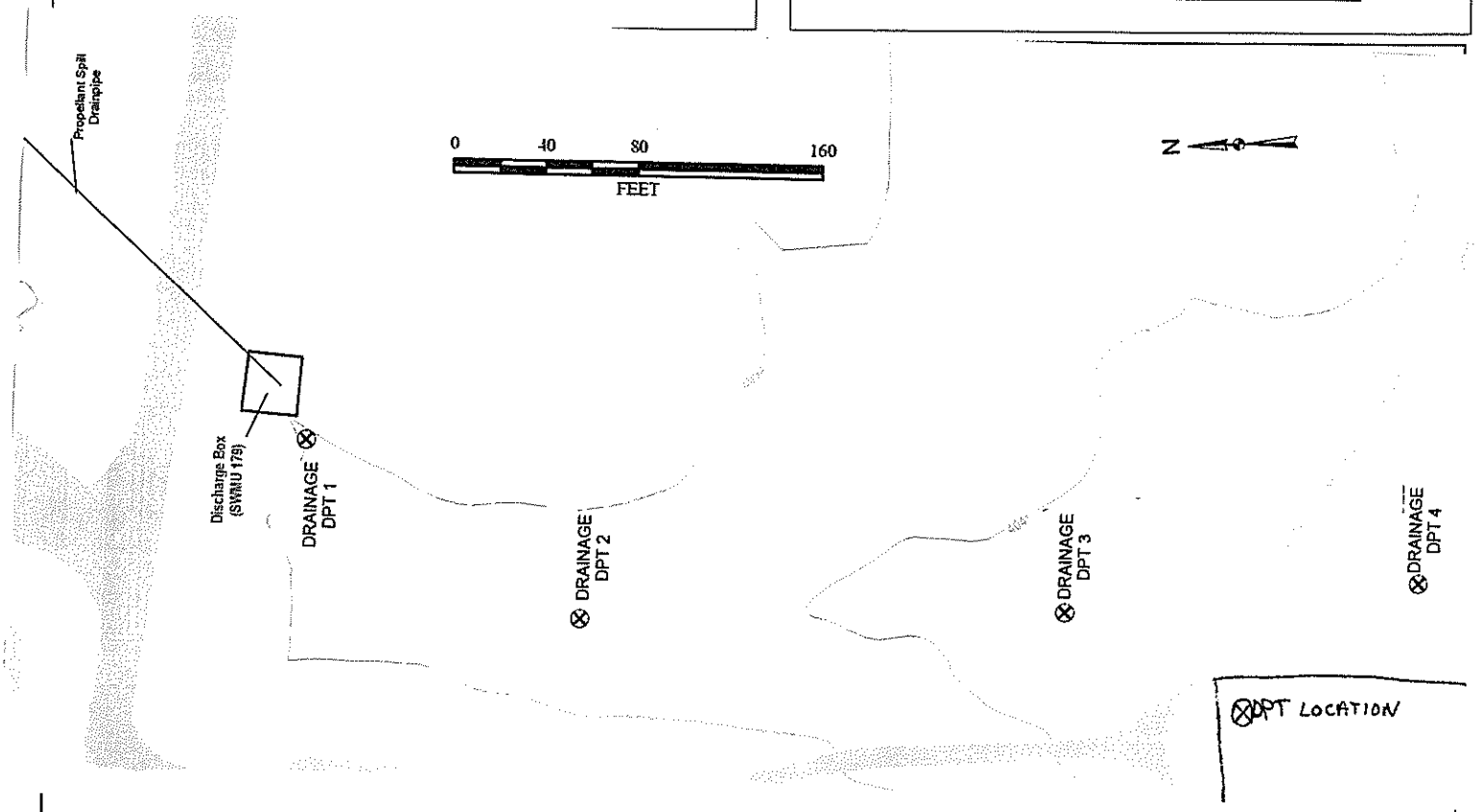

Sample Collection Log

Project Name: Holloman AFB
Project Number: T93002-1 Task 11.06.02
Investigation Site: SD-39 Missile Fuel Spill Area (SWMUs 165,177,179, & 181)

Collection Date: 11/6/10 - 11/10/10
Collection Time: 1320 - 1655
COC Number: NA

Sample Number: SS39-DPT-05A

Soil Samples
Sample Interval bgs (ft): 3.0 - 5.0
Headspace Reading (ppm): Ø
Purpose: **Chemical** **Geotechnical**
Sample Composited after VOC Collection: **YES** **NO**

Sample Analytical Parameter		Analytical Method
VOC's	11/10/10	SW 8260B
TPH-GRO	11/10/10	SW 8015 B
TPH-DRO	11/6/10	8015 B Modified
Metals	11/6/10	SW 6010 B

Collected by: J. Bennett ; B. Clowers
Logged by: B. Clowers
Reviewed by: B. Clowers

DESCRIPTION:
Sample taken at SS-39, sump Cluster 2.

Sample Location S

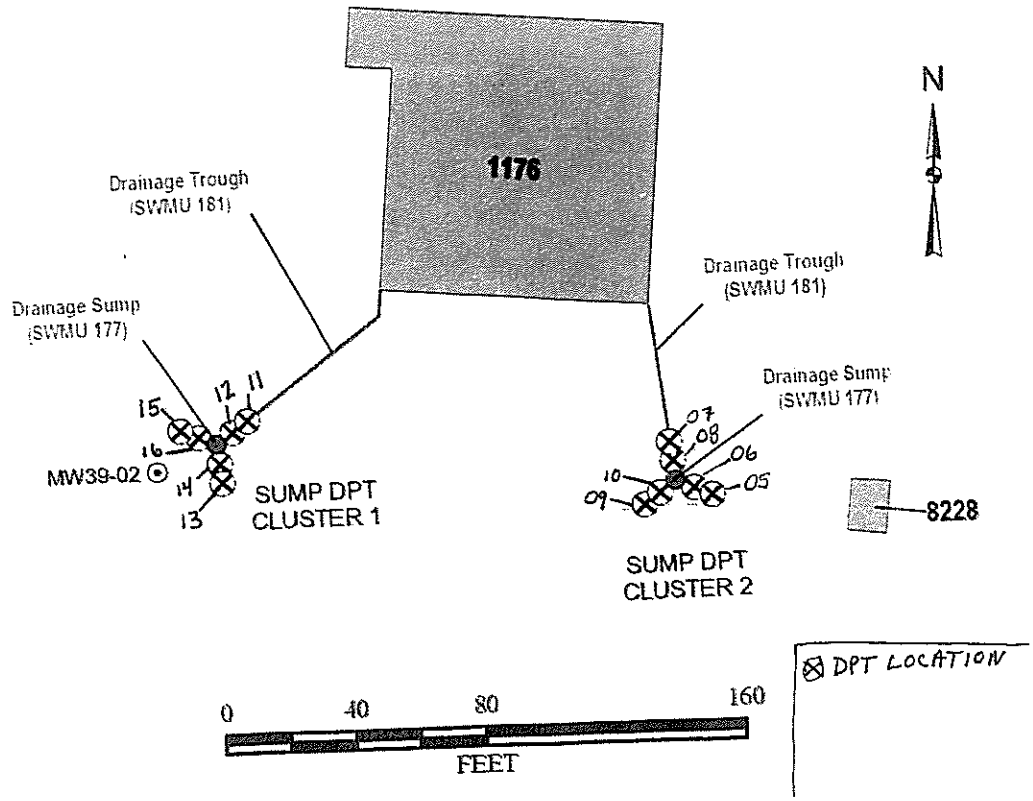

Sample Collection Log

Project Name: Holloman AFB
Project Number: T93002-1 Task 11.06.02
Investigation Site: SD-39 Missile Fuel Spill Area (SWMUs 165,177,179, & 181)

Collection Date: 11/8/10
Collection Time: 1125
COC Number: NA

Sample Number: SS39-DPT-04C

Soil Samples
Sample Interval bgs (ft): 6.0-8.0
Headspace Reading (ppm): 0.1
Purpose: **Chemical** **Geotechnical**
Sample Composited after VOC Collection: **YES** **NO**

Sample Analytical Parameter	Analytical Method
VOC's	SW 8260B
TPH-GRO	SW 8015 B
TPH-DRO	8015 B Modified

Collected by: J. Bennett ; B. Clowers
Logged by: J. Bennett
Reviewed by: B. Clowers

DESCRIPTION:
Sample taken at SS-39 Drainage swale.

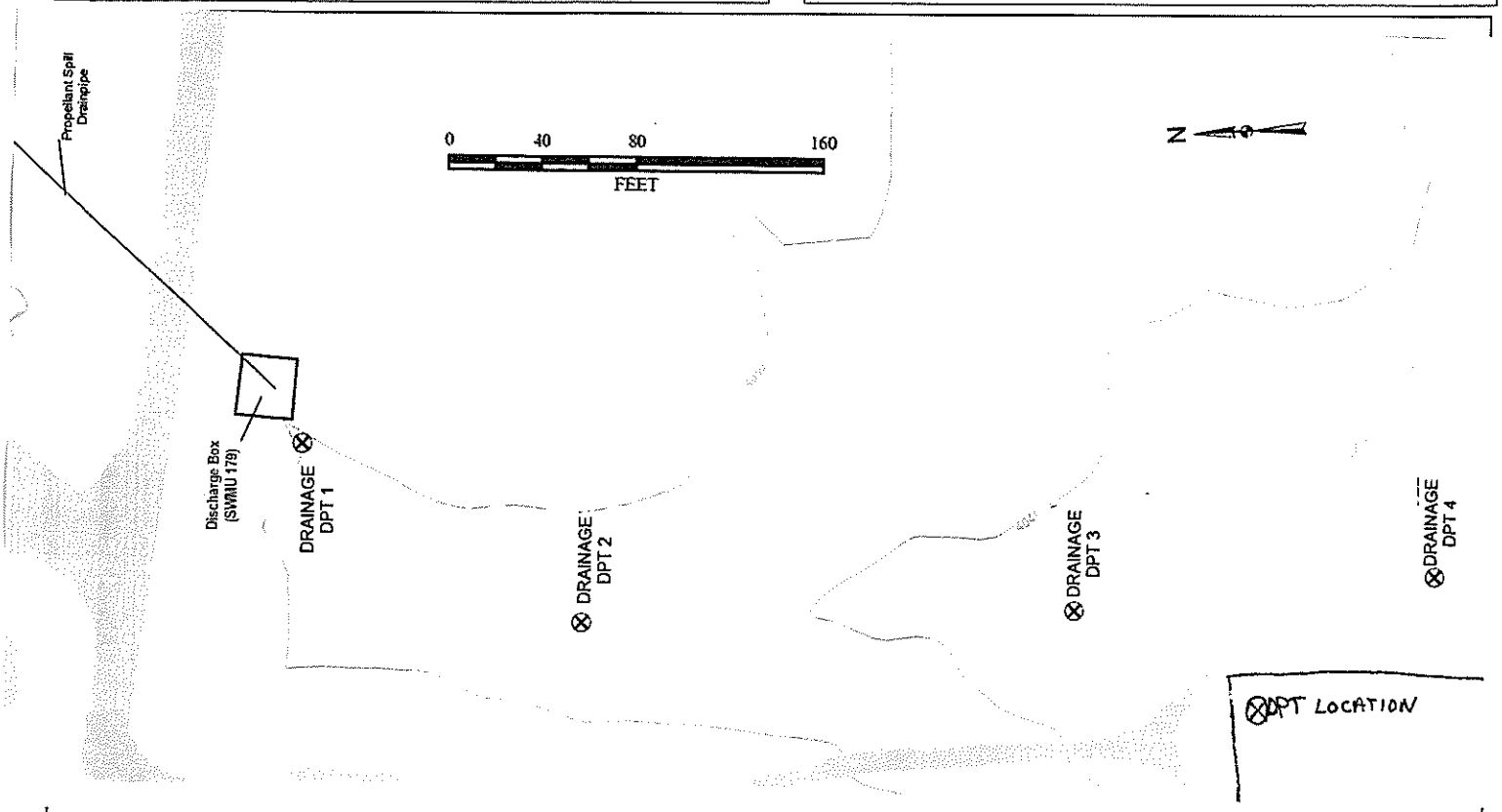

Sample Collection Log

Project Name: Holloman AFB
Project Number: T93002-1 Task 11.06.02
Investigation Site: SD-39 Missile Fuel Spill Area (SWMUs 165,177,179, & 181)

Collection Date: 11/6/10 - 11/10/10
Collection Time: 1330 - 1700
COC Number: NA

Sample Number: SS39-DPT-05B

Soil Samples
Sample Interval bgs (ft): 7.0-9.0
Headspace Reading (ppm): Ø
Purpose: (Chemical) Geotechnical
Sample Composited after VOC Collection: (YES) NO

Sample Analytical Parameter	Analytical Method
VOC's 11/10/10	SW 8260B
TPH-GRO 11/10/10	SW 8015 B
TPH-DRO 11/6/10	8015 B Modified
Metals 11/6/10	SW 6010 B

Collected by: J. Bennett ; B. Clowers
Logged by: B. Clowers
Reviewed by: B. Clowers

DESCRIPTION:
Sample taken at SS-39, sump cluster 2.

Sample Location

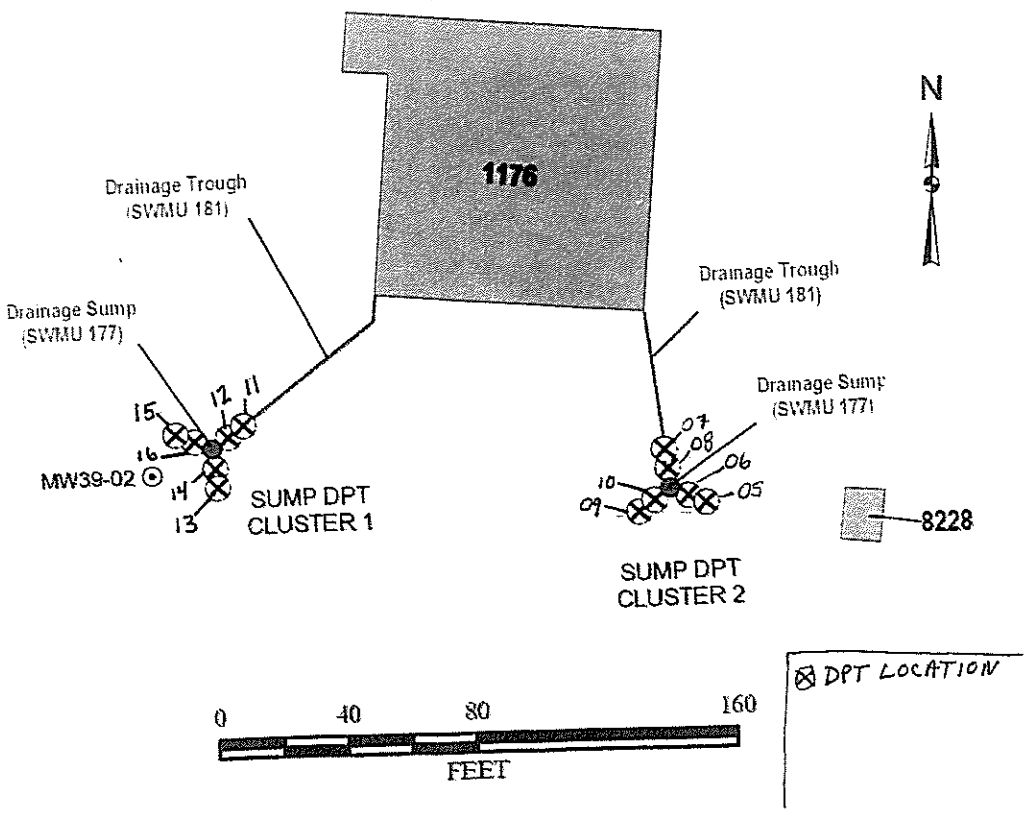

Sample Collection Log

Project Name: Holloman AFB
Project Number: T93002-1 Task 11.06.02
Investigation Site: SD-39 Missile Fuel Spill Area (SWMUs 165,177,179, & 181)

Collection Date: 11/6/10 - 11/10/10
Collection Time: 1340 - 1705
COC Number: NA

Sample Number: SS39-DPT-05C

Soil Samples
Sample Interval bgs (ft): 10.0 - 12.0
Headspace Reading (ppm): 0.1
Purpose: **Chemical** **Geotechnical**
Sample Composited after VOC Collection: **YES** **NO**

Sample Analytical Parameter	Analytical Method
VOC's 11/10/10	SW 8260B
TPH-GRO 11/10/10	SW 8015 B
TPH-DRO 11/6/10	8015 B Modified
Metals 11/6/10	SW 6010 B

Collected by: J. Bennett ; B. Clowers
Logged by: B. Clowers
Reviewed by: B. Clowers

DESCRIPTION:
Sample take at SS-39, sump cluster 2.

Sample Location S

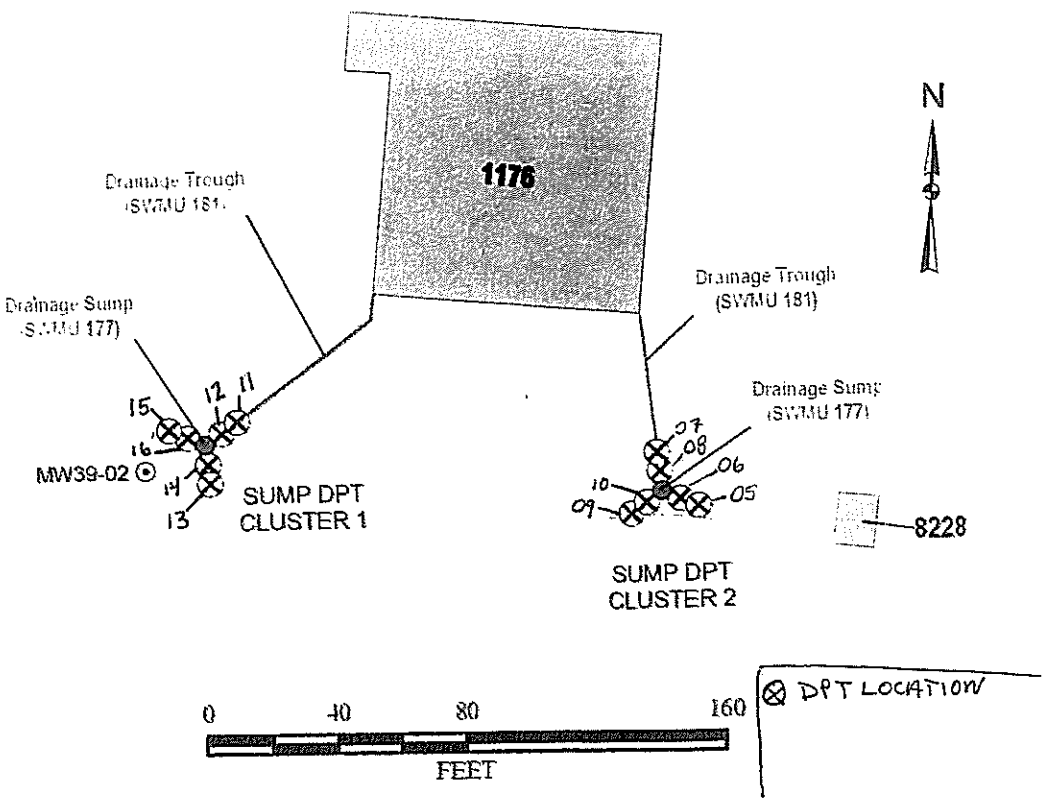

Sample Collection Log

Project Name: Holloman AFB
Project Number: T73002-Task 11.06.02
Investigation Site: SD-39 Missile Fuel Spill Area (SWMUs 165,177,179, & 181)

Collection Date: 11/6/10 - 11/10/10
Collection Time: 1355 - 1735
COC Number:

Sample Number: SS39-DPT-06A

Soil Samples
Sample Interval bgs (ft): 3.0-5.0
Headspace Reading (ppm): Ø
Purpose: (Chemical) Geotechnical
Sample Composited after VOC Collection: (YES) NO

Sample Analytical Parameter	Analytical Method
VOC's 11/10/10	SW 8260B
TPH-GRO 11/10/10	SW 8015 B
TPH-DRO 11/6/10	8015 B Modified
Metals 11/6/10	SW 6010 B

Collected by: J. Bennett ; B. Clowers
Logged by: B. Clowers
Reviewed by: B. Clowers

DESCRIPTION:
Sample taken at SS-39, sump cluster 2.

Sample Location

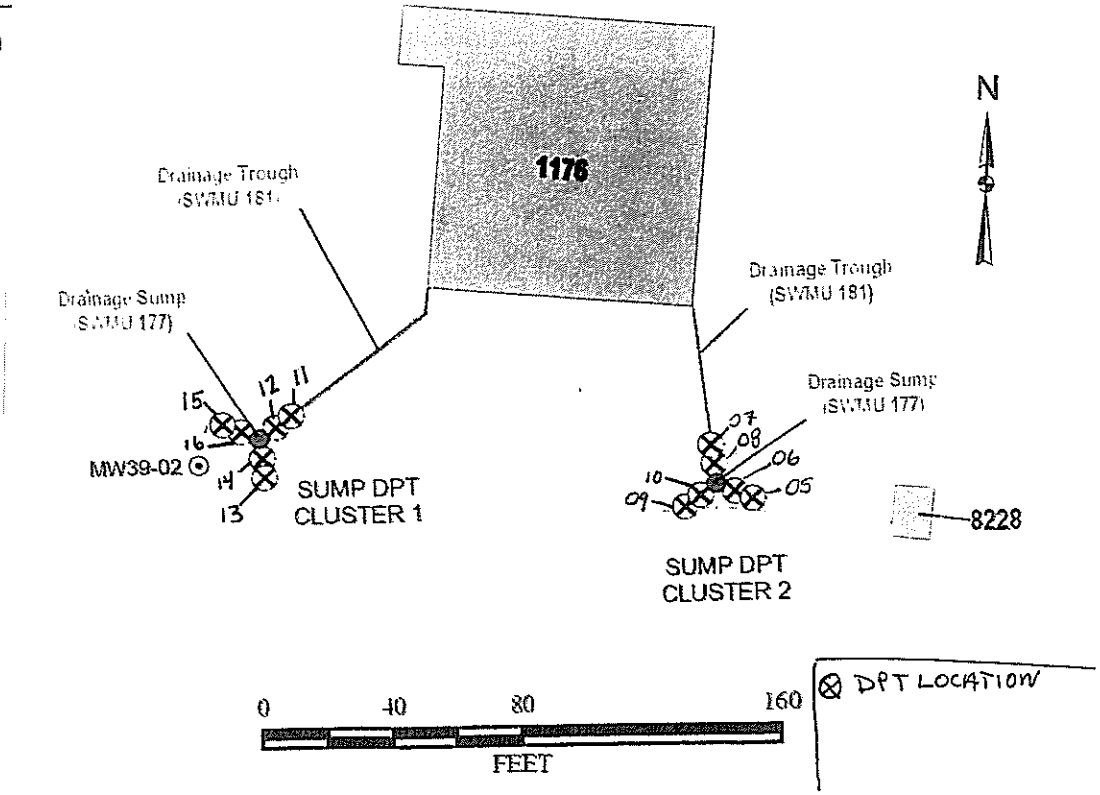

Sample Collection Log

Project Name: Holloman AFB
Project Number: T93002-1 Task 11.06.02
Investigation Site: SD-39 Missile Fuel Spill Area (SWMUs 165,177,179, & 181)

Collection Date: 11/6/10 - 11/10/10
Collection Time: 1400 - 1740
COC Number: NA

Sample Number: SS39-DPT-06B

Soil Samples
Sample Interval bgs (ft): 7.0-9.0
Headspace Reading (ppm): 0.2
Purpose: **Chemical** **Geotechnical**
Sample Composited after VOC Collection: **YES** **NO**

Sample Analytical Parameter		Analytical Method
VOC's	11/10/10	SW 8260B
TPH-GRO	11/10/10	SW 8015 B
TPH-DRO	11/6/10	8015 B Modified
Metals	11/6/10	SW 6010 B

Collected by: J. Bennett ; B. Clowers
Logged by: B. Clowers
Reviewed by: B. Clowers

DESCRIPTION:
sample taken at SS39, sump cluster 2.

Sample Location

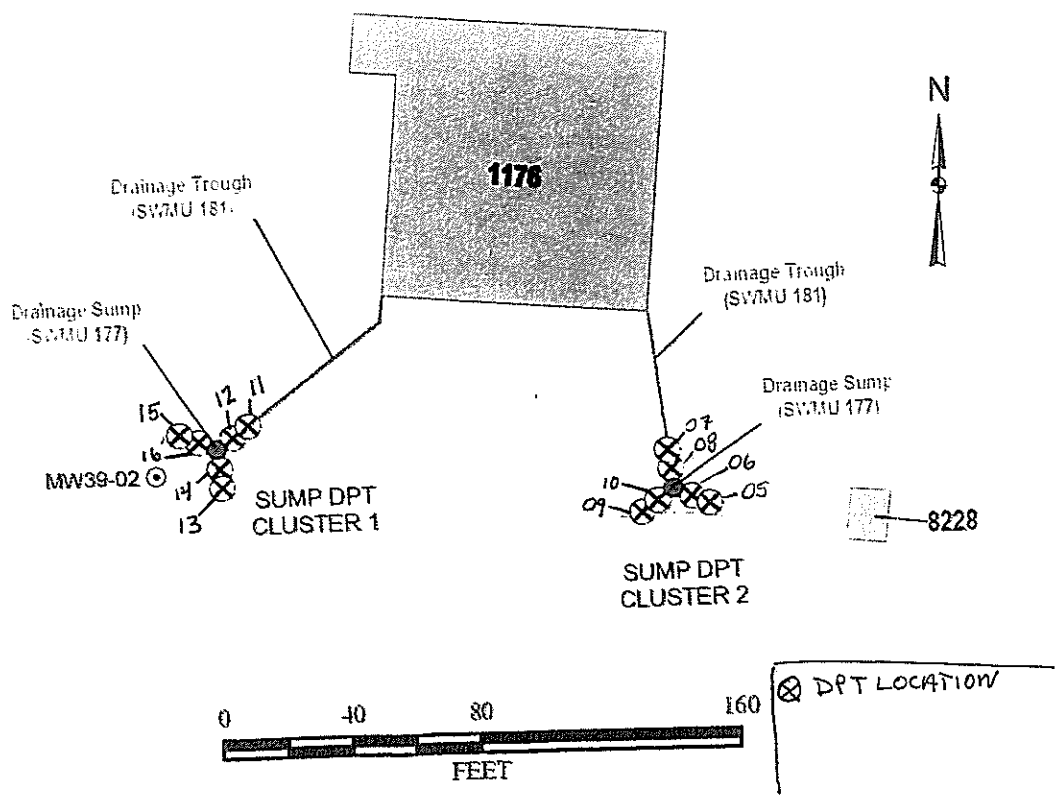

Sample Collection Log

Project Name: Holloman AFB
Project Number: T9200g-1 Task 11.06.02
Investigation Site: SD-39 Missile Fuel Spill Area (SWMUs 165,177,179, & 181)

Collection Date: 11/6/10 - 11/10/10
Collection Time: 1410 - 1745
COC Number: NA

Sample Number: SS39-DPT-06C

Soil Samples
Sample Interval bgs (ft): 10.0 - 12.0
Headspace Reading (ppm): 0.1
Purpose: **Chemical** **Geotechnical**
Sample Composited after VOC Collection: **YES** **NO**

Sample Analytical Parameter	Analytical Method
VOC's 11/10/10	SW 8260B
TPH-GRO 11/10/10	SW 8015 B
TPH-DRO 11/6/10	8015 B Modified
Metals 11/6/10	SW 6010 B

Collected by: J. Bennett ; B. Clowers
Logged by: B. Clowers
Reviewed by:

DESCRIPTION:
Sample taken at SS-39, Sump Cluster 2.

Sample Location :

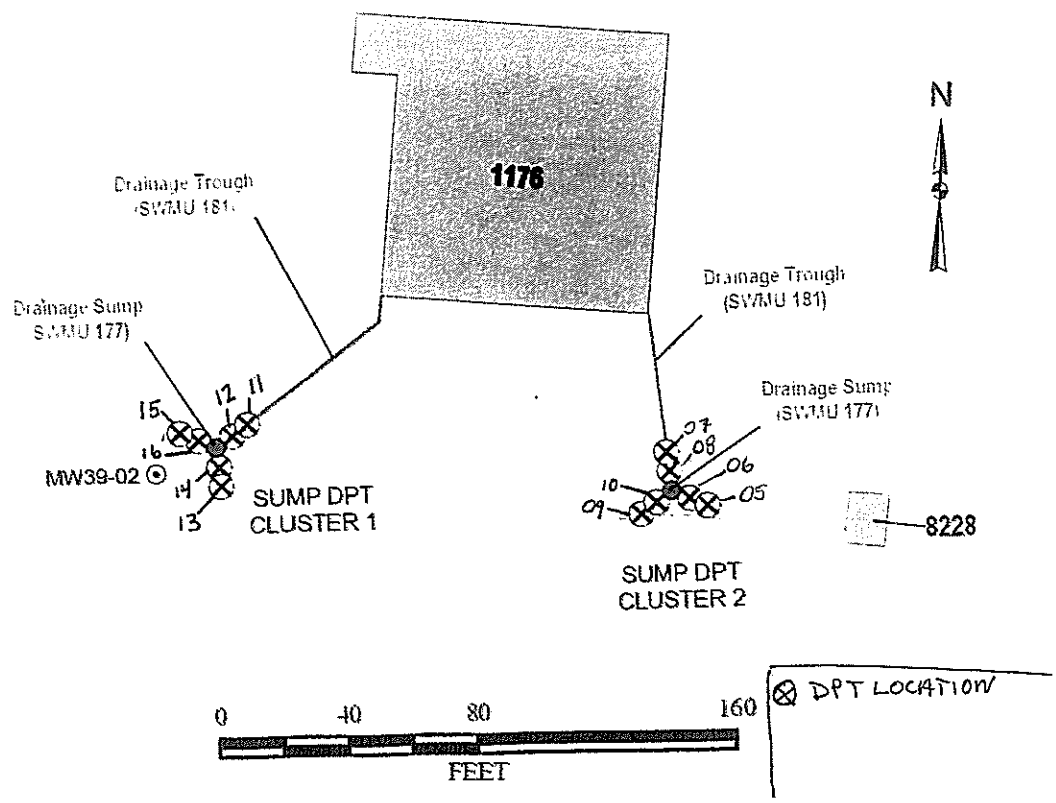

Sample Collection Log

Project Name: Holloman AFB
Project Number: T93002-1 Task 11.06.02
Investigation Site: SD-39 Missile Fuel Spill Area (SWMUs 165,177,179, & 181)

Collection Date: 11/6/10 - 11/11/10
Collection Time: 1425 - 0750
COC Number: NA

Sample Number: SS39-DPT-07A

Soil Samples
Sample Interval bgs (ft): 2.0 - 4.0
Headspace Reading (ppm): Ø
Purpose: **Chemical** **Geotechnical**
Sample Composited after VOC Collection: **YES** **NO**

Sample Analytical Parameter	Analytical Method
VOC's 11/11/10	SW 8260B
TPH-GRO 11/11/10	SW 8015 B
TPH-DRO 11/10/10	8015 B Modified
Metals 11/6/10	SW 6010 B

Collected by: J. Bennett ; B. Clowers
Logged by: B. Clowers
Reviewed by: B. Clowers

DESCRIPTION:
Sample taken at SS-39 at Sump Cluster 2.

Sample Location S

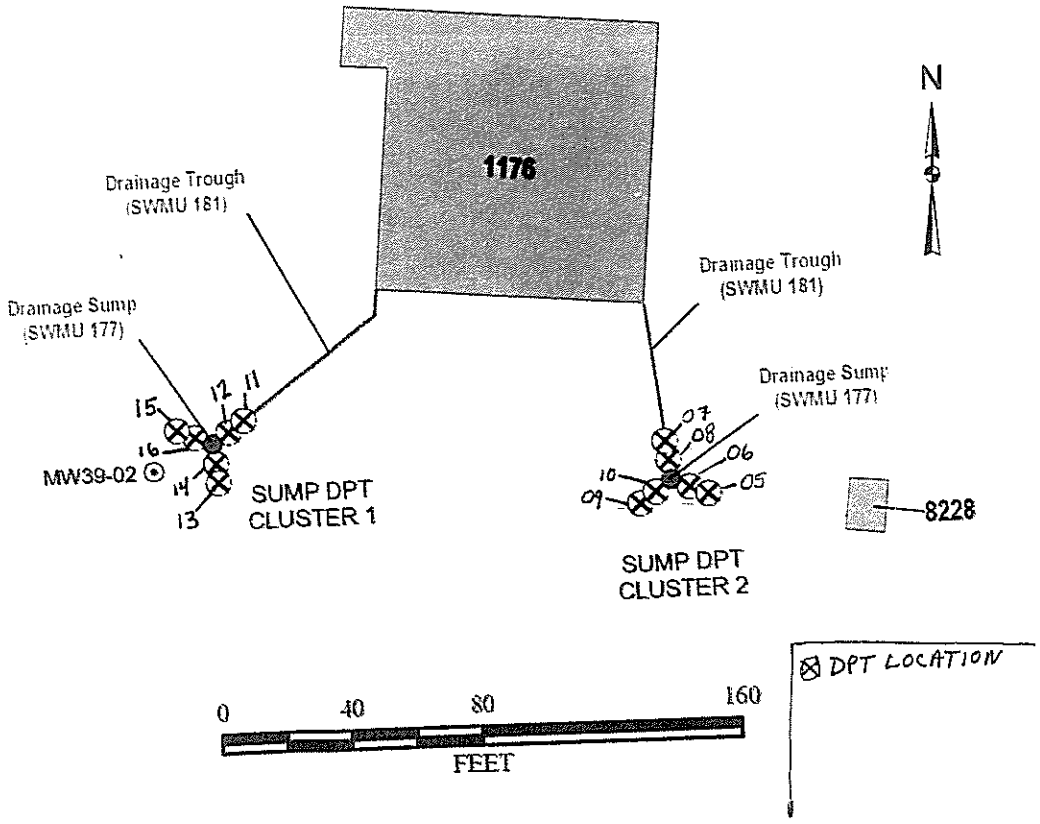

Sample Collection Log

Project Name: Holloman AFB
Project Number: T93002-1 Task 11.06.02
Investigation Site: SD-39 Missile Fuel Spill Area (SWMUs 165,177,179, & 181)

Collection Date: 11/6/10 - 11/11/10
Collection Time: 1435 - 0755
COC Number: NA

Sample Number: SS39-DPT-07B

Soil Samples
Sample Interval bgs (ft): 7.0-9.0
Headspace Reading (ppm): Ø
Purpose: **Chemical** **Geotechnical**
Sample Composited after VOC Collection: **YES** **NO**

Sample Analytical Parameter	Analytical Method
VOC's 11/11/10	SW 8260B
TPH-GRO 11/11/10	SW 8015 B
TPH-DRO 11/6/10	8015 B Modified
Metals 11/6/10	SW 6010 B

Collected by: J. Bennett ; B. Clowers
Logged by: B. Clowers
Reviewed by: B. Clowers

DESCRIPTION:
Sample taken at SS-39 at sump cluster 2.

Sample Location

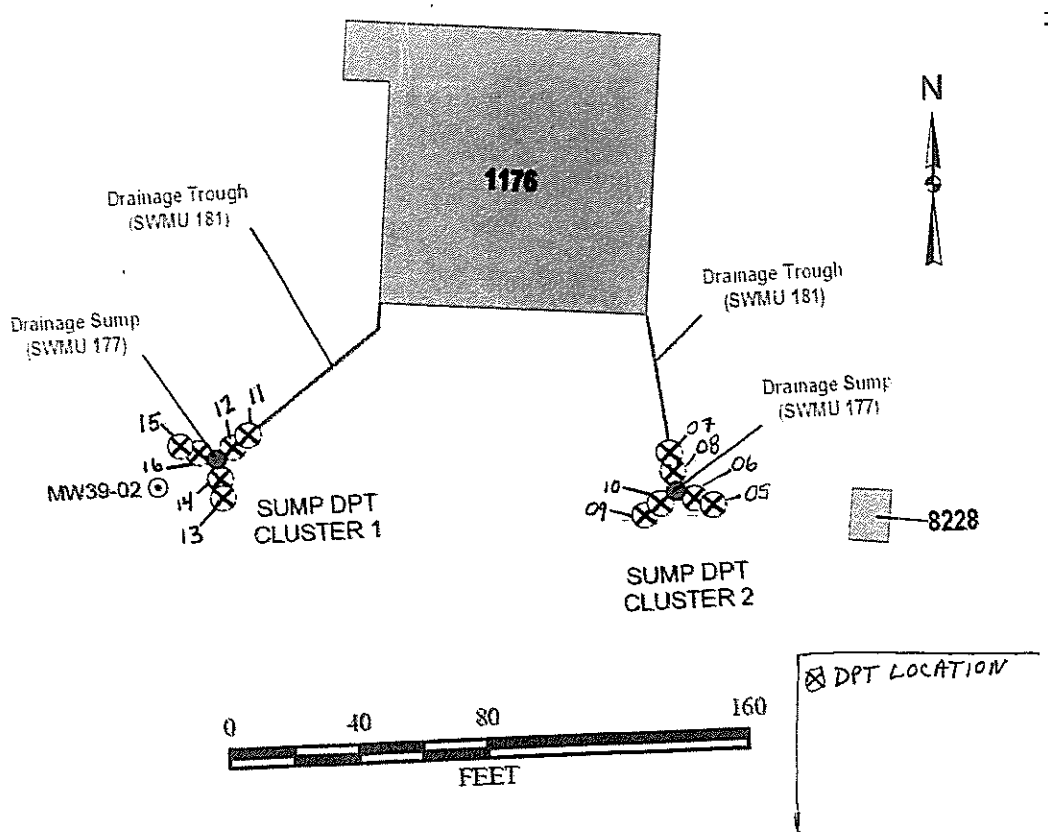

Sample Collection Log

Project Name: Holloman AFB
Project Number: T93002-1 Task 11.06.02
Investigation Site: SD-39 Missile Fuel Spill Area (SWMUs 165,177,179, & 181)

Collection Date: 11/6/10 - 11/11/10
Collection Time: 1450 - 0800
COC Number: N/A

Sample Number: SS39-DPT-07C

Soil Samples
Sample Interval bgs (ft): 10.0-12.0
Headspace Reading (ppm): Ø
Purpose: (Chemical) Geotechnical
Sample Composited after VOC Collection: (YES) NO

Sample Analytical Parameter	Analytical Method
VOC's 11/11/10	SW 8260B
TPH-GRO 11/11/10	SW 8015 B
TPH-DRO 11/6/10	8015 B Modified
Metals 11/6/10	SW 6010 B

Collected by: J. Bennett ; B. Clowers
Logged by: B. Clowers
Reviewed by: B. Clowers

DESCRIPTION:
Sample taken at SS-39 at sump cluster 2.

Sample Location

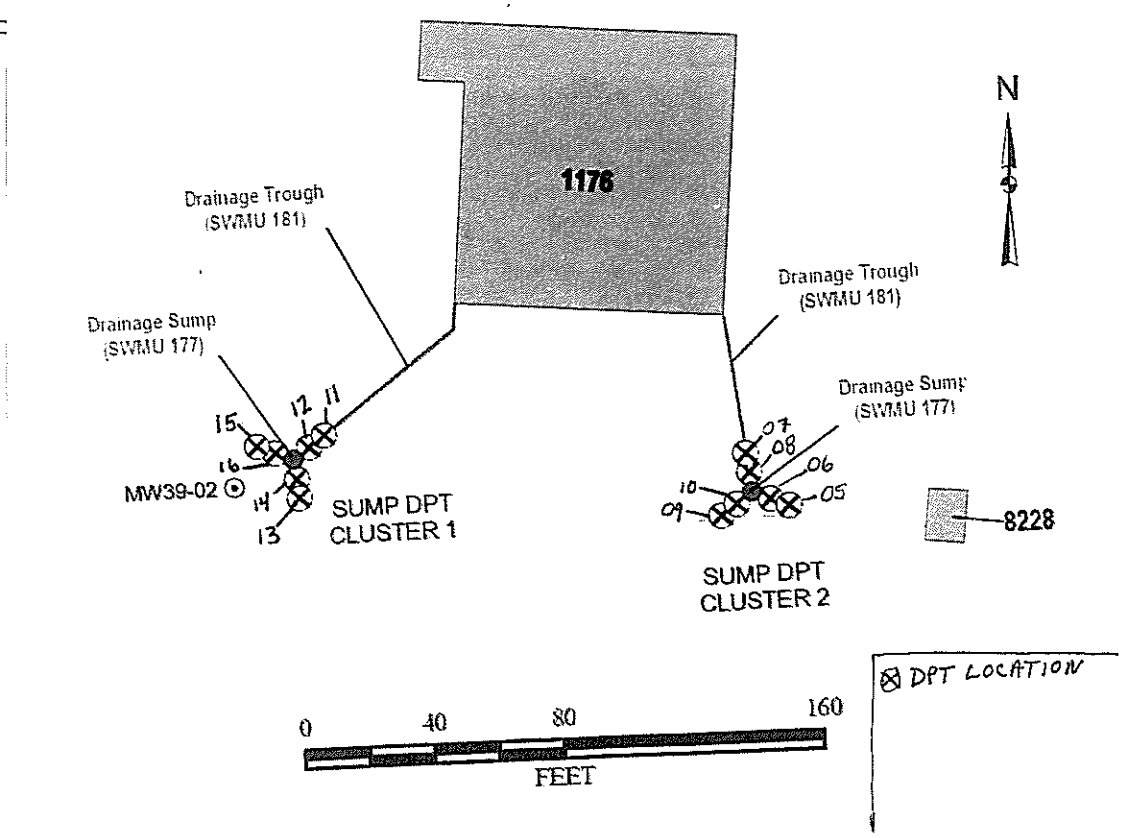

Sample Collection Log

Project Name: Holloman AFB
Project Number: T93002-1 Task 11.06.02
Investigation Site: SD-39 Missile Fuel Spill Area (SWMUs 165,177,179, & 181)

Collection Date: 11/6/10 - 11/11/10
Collection Time: 1520 - 0825
COC Number: NA

Sample Number: SS39-DPT-08A

Soil Samples
Sample Interval bgs (ft): 2.0-4.0
Headspace Reading (ppm): Ø
Purpose: **Chemical** **Geotechnical**
Sample Composited after VOC Collection: **YES** **NO**

Sample Analytical Parameter	Analytical Method
VOC's 11/11/10	SW 8260B
TPH-GRO 11/11/10	SW 8015 B
TPH-DRO 11/6/10	8015 B Modified
Metals 11/6/10	SW 6010 B

Collected by: J. Bennett ; B. Clowers
Logged by: B. Clowers
Reviewed by: B. Clowers

DESCRIPTION:
Sample taken at SS-39 at Sump cluster 2.

Sample Location S

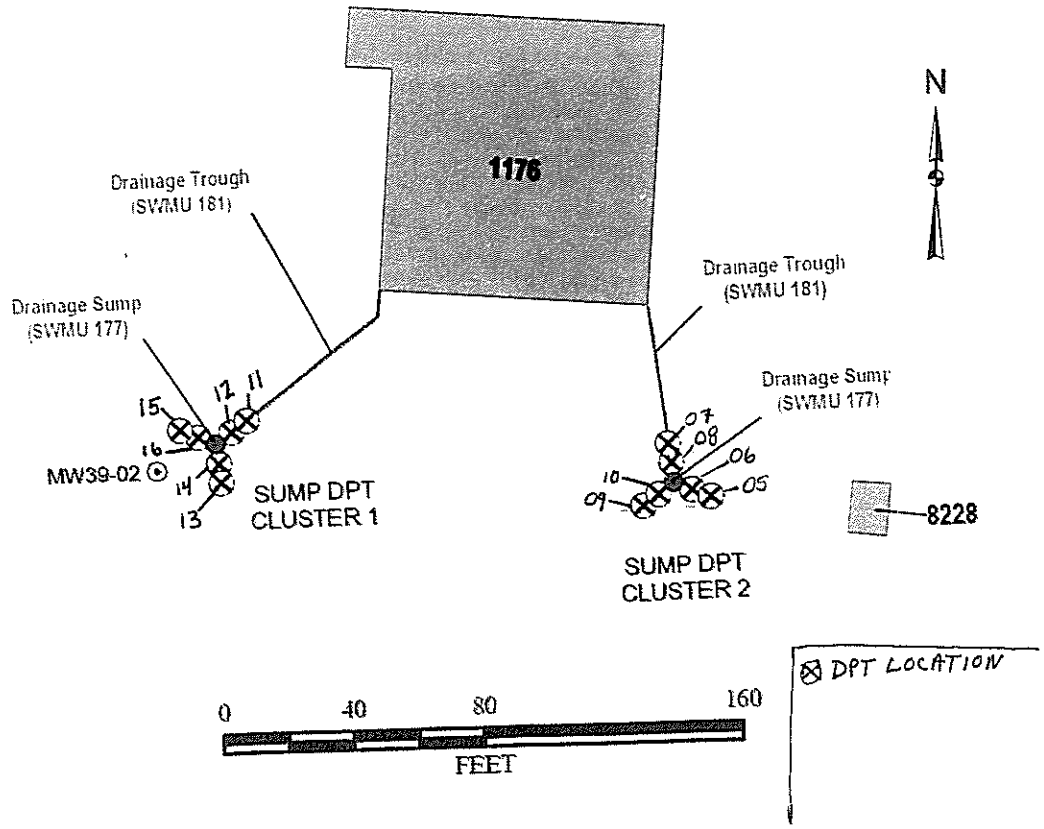

Sample Collection Log

Project Name: Holloman AFB
Project Number: T93002-1 Task 11.06.02
Investigation Site: SD-39 Missile Fuel Spill Area (SWMUs 165,177,179, & 181)

Collection Date: 11/6/10 - 11/11/10
Collection Time: 1520 - 0830
COC Number: NA

Sample Number: SS39-DPT-08B

Soil Samples
Sample Interval bgs (ft): 7.0-9.0
Headspace Reading (ppm): 0.1
Purpose: **Chemical** **Geotechnical**
Sample Composited after VOC Collection: **YES** **NO**

Sample Analytical Parameter	Analytical Method
VOC's 11/11/10	SW 8260B
TPH-GRO 11/11/10	SW 8015 B
TPH-DRO 11/6/10	8015 B Modified
Metals 11/6/10	SW 6010 B

Collected by: J. Bennett ; B. Clowers
Logged by: B. Clowers
Reviewed by: B. Clowers

DESCRIPTION:
Sample taken at SS-39 at sump cluster 2.

Sample Location

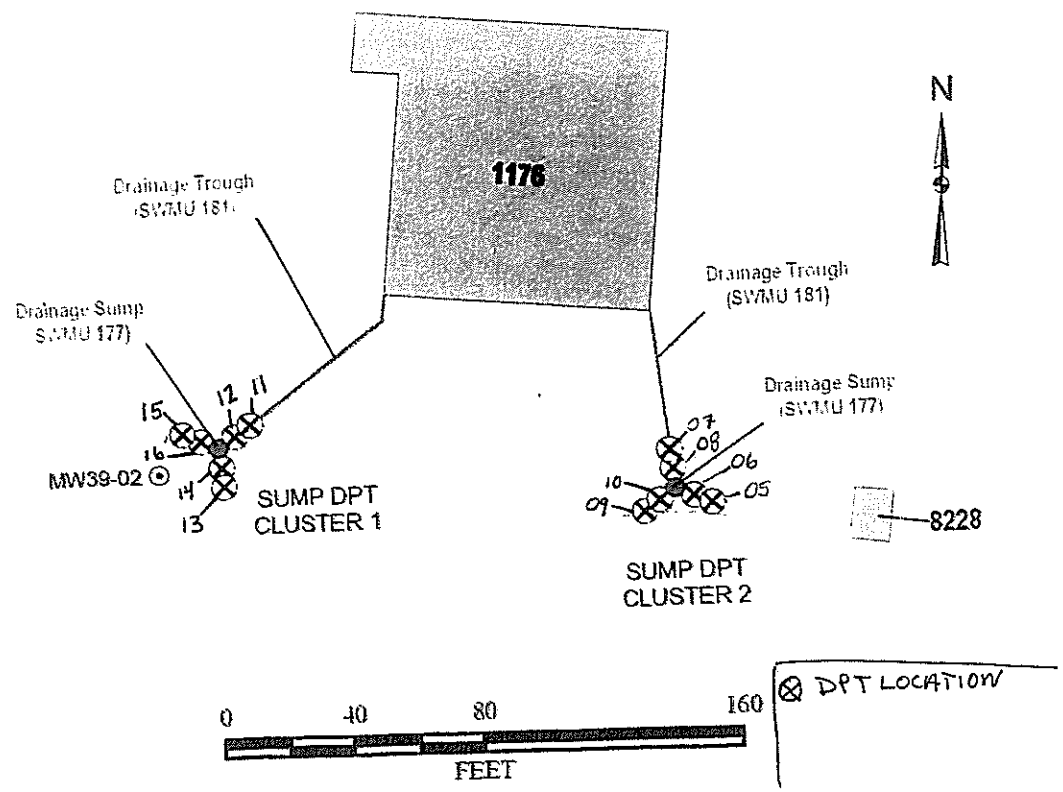

Sample Collection Log

Project Name: Holloman AFB
Project Number: T93002-1 Task 11.06.02
Investigation Site: SD-39 Missile Fuel Spill Area (SWMUs 165,177,179, & 181)

Collection Date: 11/6/10 - 11/11/10
Collection Time: 1525 - 0835
COC Number: NA

Sample Number: SS39-DPT-08C

Soil Samples
Sample Interval bgs (ft): 10.0 - 12.0
Headspace Reading (ppm): Ø
Purpose: (Chemical) Geotechnical
Sample Composited after VOC Collection: (YES) NO

Sample Analytical Parameter	Analytical Method
VOC's 11/11/10	SW 8260B
TPH-GRO 11/11/10	SW 8015 B
TPH-DRO 11/6/10	8015 B Modified
Metals 11/6/10	SW 6010 B

Collected by: J. Bennett ; B. Clowers
Logged by: B. Clowers
Reviewed by: B. Clowers

DESCRIPTION:
Sample taken at SS-39 at sump cluster 2.

Sample Location :

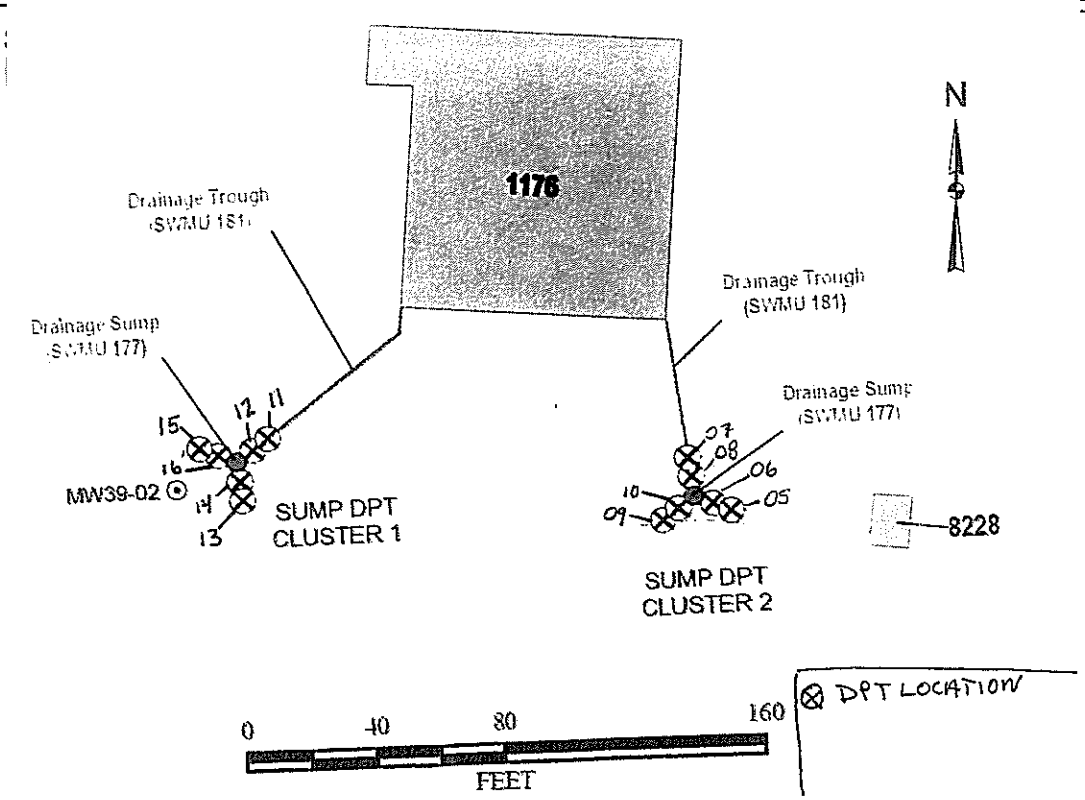

Sample Collection Log

Project Name: Holloman AFB
Project Number: T93002-1 Task 11.06.02
Investigation Site: SD-39 Missile Fuel Spill Area (SWMUs 165,177,179, & 181)

Collection Date: 11/6/10 - 11/11/10
Collection Time: 1540 - 0850
COC Number: NA

Sample Number: SS39-DPT-09A

Soil Samples
Sample Interval bgs (ft): 1.75 - 3.75
Headspace Reading (ppm): Ø
Purpose: **Chemical** **Geotechnical**
Sample Composited after VOC Collection: **YES** **NO**

Sample Analytical Parameter	Analytical Method
VOC's 11/11/10	SW 8260B
TPH-GRO 11/11/10	SW 8015 B
TPH-DRO 11/6/10	8015 B Modified
Metals 11/6/10	SW 6010 B

Collected by: J. Bennett ; B. Clowers
Logged by: B. Clowers
Reviewed by: B. Clowers

DESCRIPTION:
Sample taken at SS-39 at sump cluster 2.

Sample Location S

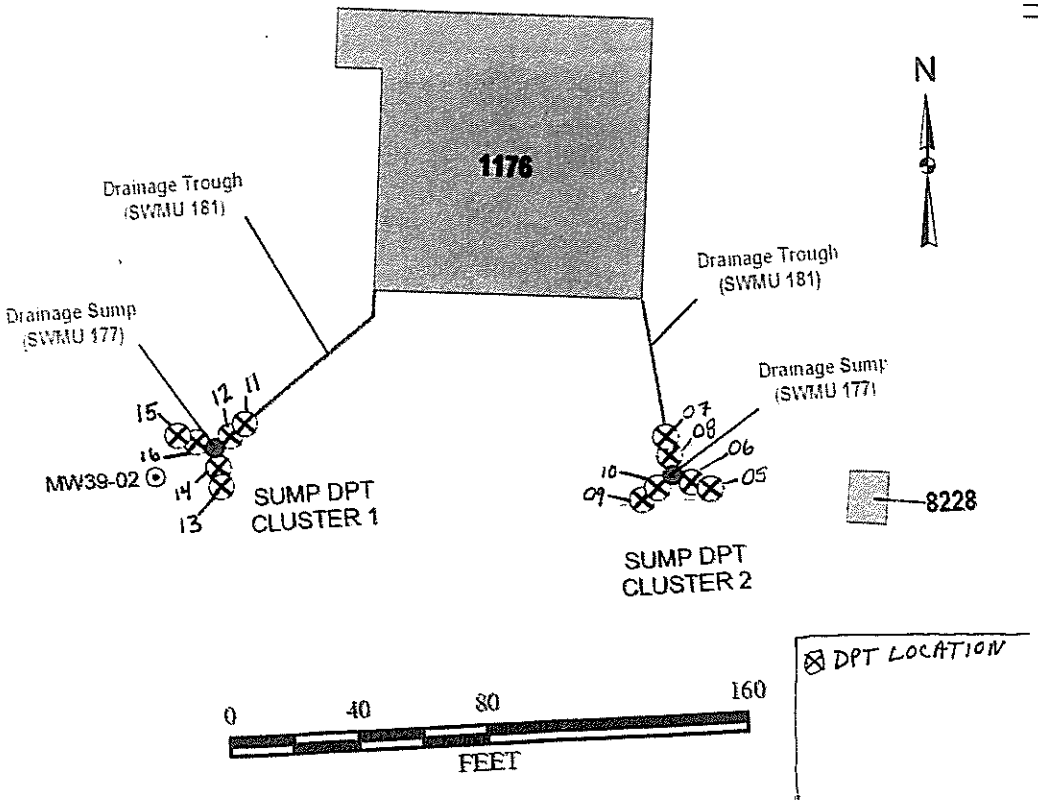

Sample Collection Log

Project Name: Holloman AFB
Project Number: T93002-1 Task 11.06.02
Investigation Site: SD-39 Missile Fuel Spill Area (SWMUs 165,177,179, & 181)

Collection Date: 11/6/10 - 11/11/10
Collection Time: 1550 - 0855
COC Number: NA

Sample Number: SS39-DPT-09B

Soil Samples
Sample Interval bgs (ft): 5.75 - 7.75
Headspace Reading (ppm): 0.2
Purpose: (Chemical) Geotechnical
Sample Composited after VOC Collection: (YES) NO

Sample Analytical Parameter	Analytical Method
VOC's 11/11/10	SW 8260B
TPH-GRO 11/11/10	SW 8015 B
TPH-DRO 11/6/10	8015 B Modified
Metals 11/6/10	SW 6010 B

Collected by: J. Bennett ; B. Clowers
Logged by: B. Clowers
Reviewed by: B. Clowers

DESCRIPTION:
Sample taken at SS-39 at Sump cluster 2.

Sample Location

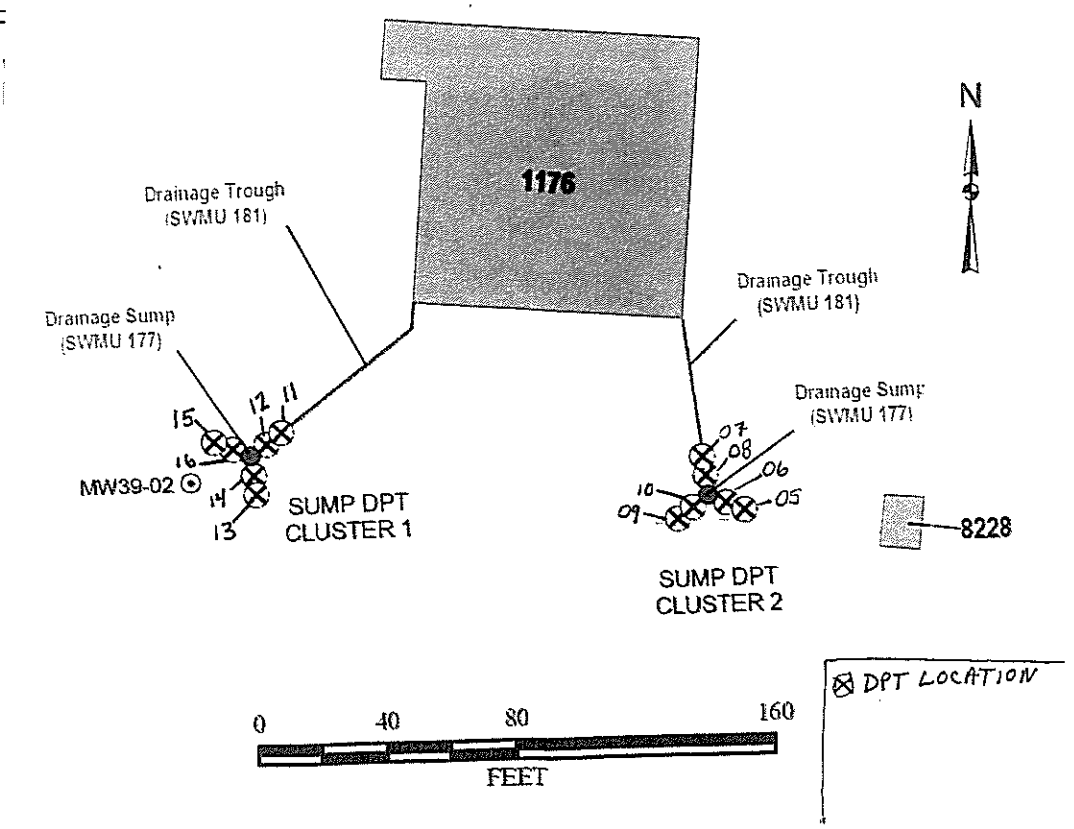

Sample Collection Log

Project Name: Holloman AFB
Project Number: T93002-1 Task 11.06.02
Investigation Site: SD-39 Missile Fuel Spill Area (SWMUs 165,177,179, & 181)

Collection Date: 11/6/10 - 11/11/10
Collection Time: 1600 - 0900
COC Number: NA

Sample Number: SS39-DPT-09C

Soil Samples
Sample Interval bgs (ft): 10.0-12.0
Headspace Reading (ppm): Ø
Purpose: **Chemical** **Geotechnical**
Sample Composited after VOC Collection: **YES** **NO**

Sample Analytical Parameter	Analytical Method
VOC's 11/11/10	SW 8260B
TPH-GRO 11/11/10	SW 8015 B
TPH-DRO 11/6/10	8015 B Modified
Metals 11/6/10	SW 6010 B

Collected by: J. Bennett ; B. Clowers
Logged by: B. Clowers
Reviewed by: B. Clowers

DESCRIPTION:
Sample taken at SS-39 at Sump Cluster 2.

Sample Location

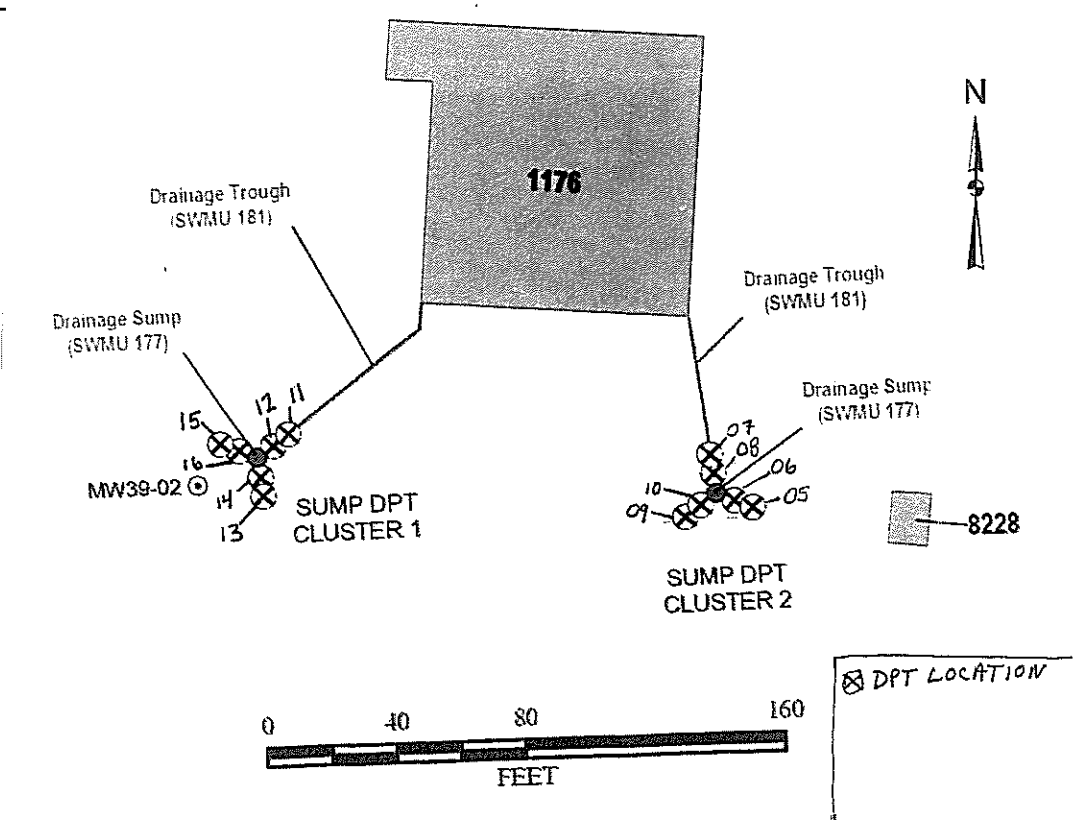

Sample Collection Log

Project Name: Holloman AFB
Project Number: T93002-1 Task 11.06.02
Investigation Site: SD-39 Missile Fuel Spill Area (SWMUs 165,177,179, & 181)

Collection Date: 11/6/10 - 11/11/10
Collection Time: 1610 - 0905
COC Number: NA

Sample Number: SS39-DPT-10A

Soil Samples
Sample Interval bgs (ft): 1.25 - 3.25
Headspace Reading (ppm): Ø
Purpose: (Chemical) Geotechnical
Sample Composited after VOC Collection: (YES) NO

Sample Analytical Parameter	Analytical Method
VOC's 11/11/10	SW 8260B
TPH-GRO 11/11/10	SW 8015 B
TPH-DRO 11/6/10	8015 B Modified
Metals 11/6/10	SW 6010 B

Collected by: J. Bennett ; B. Clowers
Logged by: B. Clowers
Reviewed by: B. Clowers

DESCRIPTION:
Sample taken at SS-39 at sump Cluster 2.

Sample Location

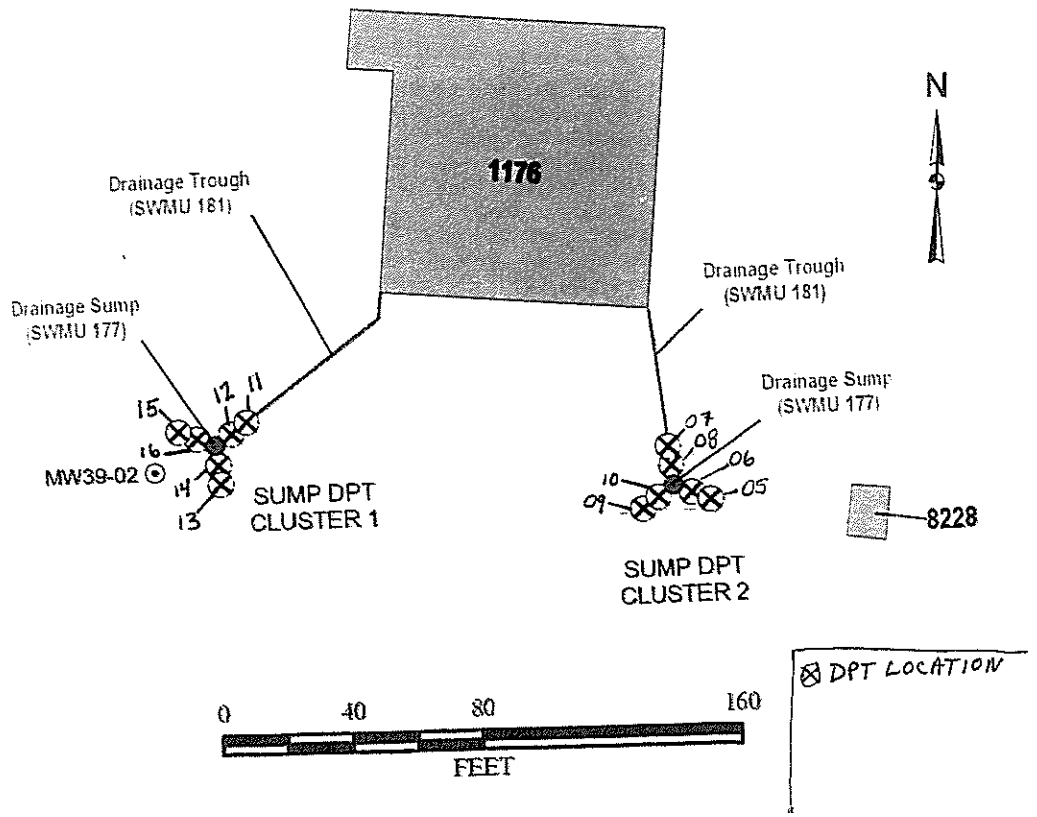

Sample Collection Log

Project Name: Holloman AFB
Project Number: T93002-1 Task 11.06.02
Investigation Site: SD-39 Missile Fuel Spill Area (SWMUs 165,177,179, & 181)

Collection Date: 11/6/10 - 11/11/10
Collection Time: 1620 - 0910
COC Number: N/A

Sample Number: SS39-DPT-10B

Soil Samples
Sample Interval bgs (ft): 5.50 - 7.50
Headspace Reading (ppm): Ø
Purpose: **Chemical** **Geotechnical**
Sample Composited after VOC Collection: **YES** **NO**

Sample Analytical Parameter	Analytical Method
VOC's 11/11/10	SW 8260B
TPH-GRO 11/11/10	SW 8015 B
TPH-DRO 11/6/10	8015 B Modified
Metals 11/6/10	SW 6010 B

Collected by: J. Bennett ; B. Clowers
Logged by: B. Clowers
Reviewed by: B. Clowers

DESCRIPTION:
Sample taken at SS-39 at Sump Cluster 2.

Sample Location :

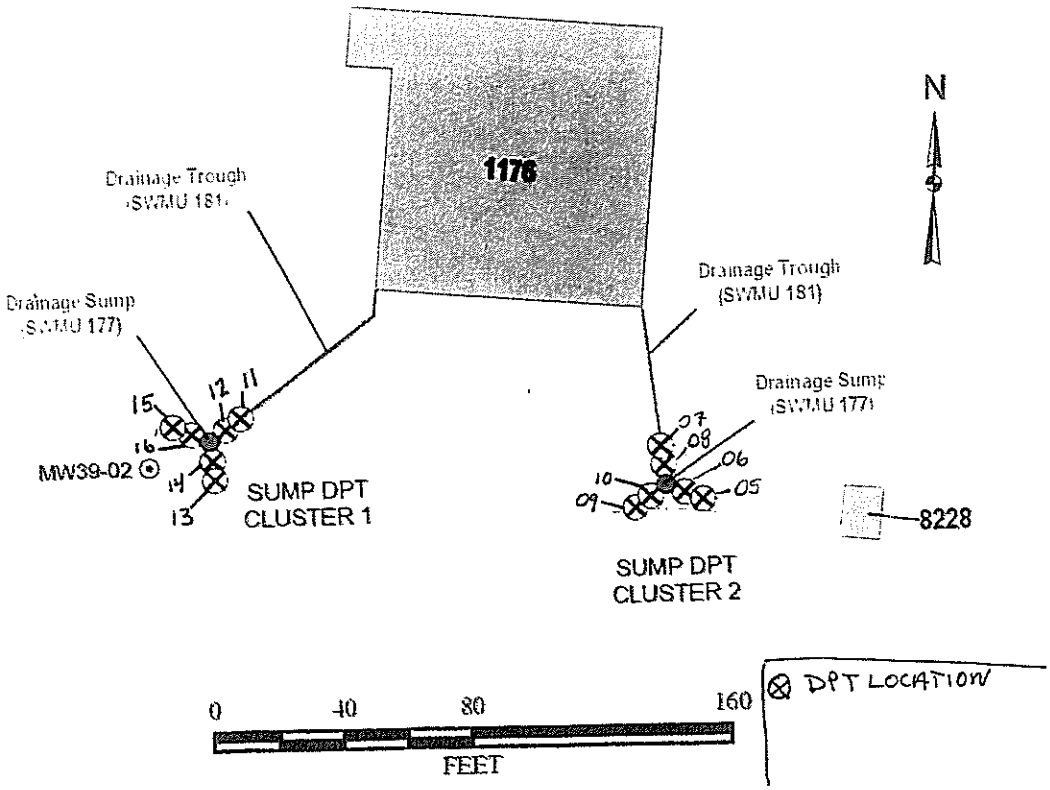

Sample Collection Log

Project Name: Holloman AFB
Project Number: T93002-1 Task 11.06.02
Investigation Site: SD-39 Missile Fuel Spill Area (SWMUs 165,177,179, & 181)

Collection Date: 11/6/10 - 11/11/10
Collection Time: 1635 - 0915
COC Number: N14

Sample Number: SS39-DPT-10C

Soil Samples
Sample Interval bgs (ft): 10.0-12.0
Headspace Reading (ppm): Ø
Purpose: **Chemical** **Geotechnical**
Sample Composited after VOC Collection: **YES** **NO**

Sample Analytical Parameter	Analytical Method
VOC's 11/11/10	SW 8260B
TPH-GRO 11/11/10	SW 8015 B
TPH-DRO 11/6/10	8015 B Modified
Metals 11/6/10	SW 6010 B

Collected by: J. Bennett ; B. Clowers
Logged by: B. Clowers
Reviewed by: B. Clowers

DESCRIPTION:
Sample taken at SS-39 at sump cluster 2.

Sample Location S

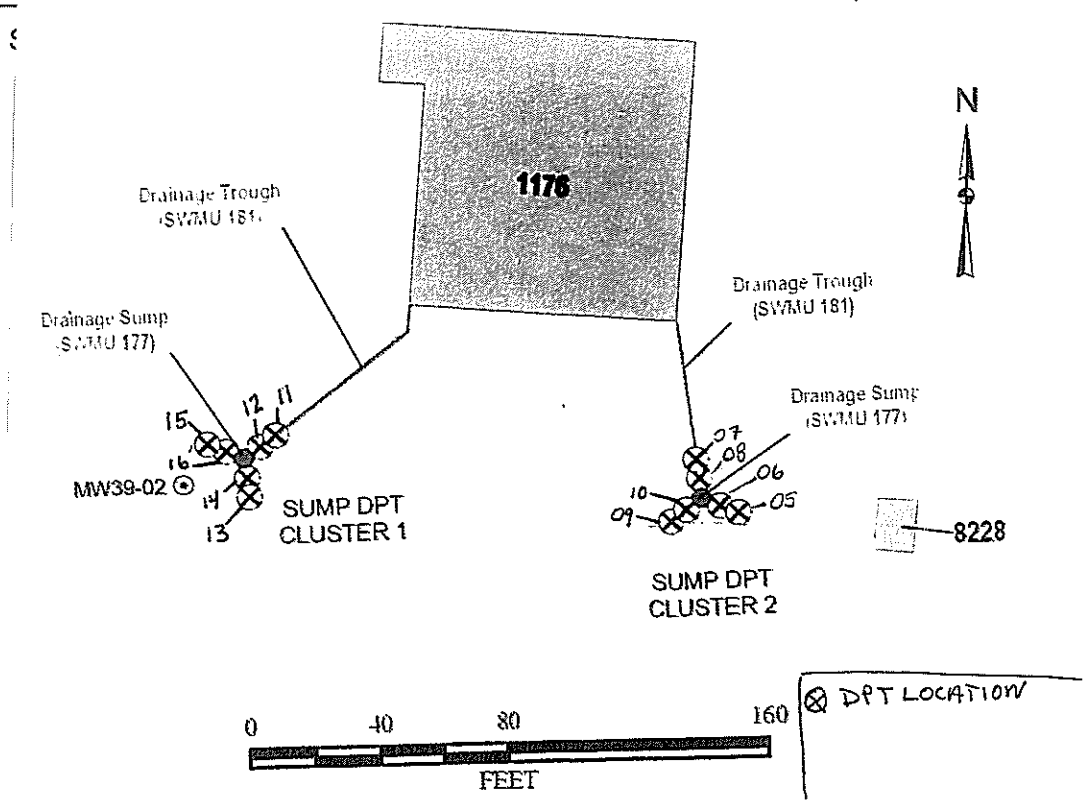

Sample Collection Log

Project Name: Holloman AFB
Project Number: T93002-1 Task 11.06.02
Investigation Site: SD-39 Missile Fuel Spill Area (SWMUs 165,177,179, & 181)

Collection Date: 11/7/10 - 11/11/10
Collection Time: 1550 - 1000
COC Number: NA

Sample Number: SS39-DPT-11A

Soil Samples
Sample Interval bgs (ft): 1.75-3.75
Headspace Reading (ppm): Ø
Purpose: **Chemical** **Geotechnical**
Sample Composited after VOC Collection: **YES** **NO**

Sample Analytical Parameter	Analytical Method
VOC's 11/11/10	SW 8260B
TPH-GRO 11/11/10	SW 8015 B
TPH-DRO 11/7/10	8015 B Modified
Metals 11/7/10	SW 6010 B

Collected by: J. Bennett ; B. Clowers
Logged by: B. Clowers
Reviewed by: B. Clowers

DESCRIPTION:
Sample taken at SS-39 at sump cluster 1.

Sample Location

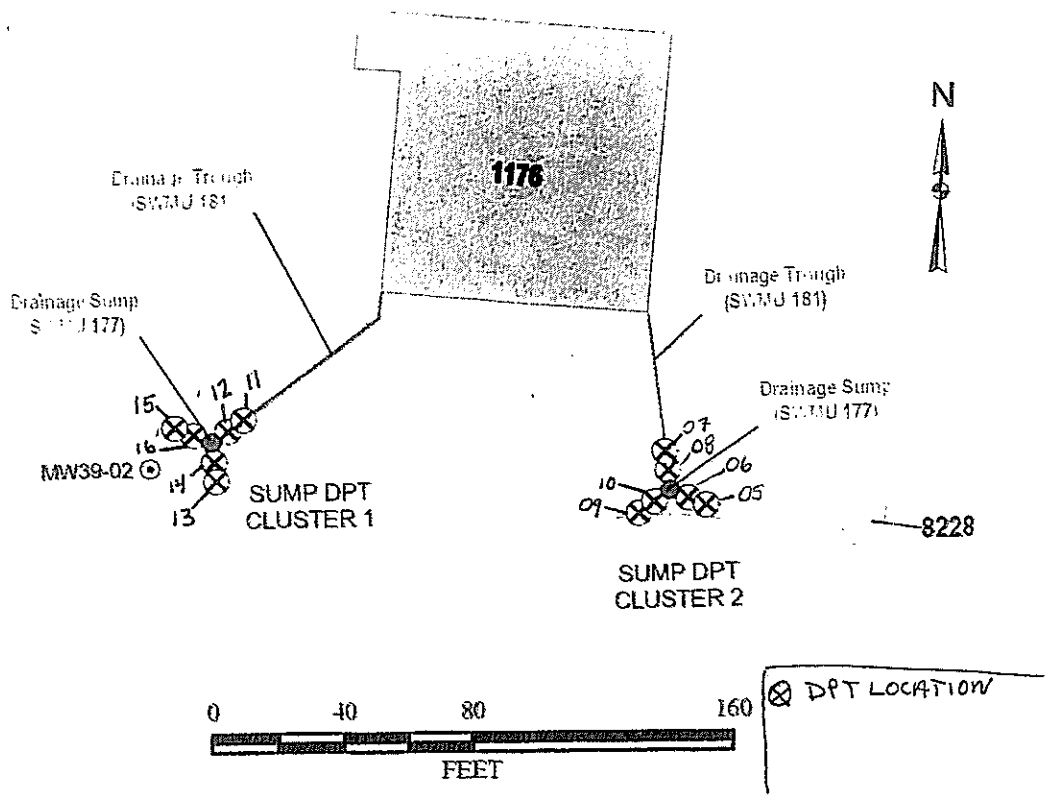

Sample Collection Log

Project Name: Holloman AFB
Project Number: T93002-1 Task 11.0602
Investigation Site: SD-39 Missile Fuel Spill Area (SWMUs 165,177,179, & 181)

Collection Date: 11/7/10 - 11/11/10
Collection Time: 1600 - 1005
COC Number: NA

Sample Number: SS39-DPT-11B

Soil Samples
Sample Interval bgs (ft): 5.75-7.75
Headspace Reading (ppm): Ø
Purpose: (Chemical) Geotechnical
Sample Composited after VOC Collection: (YES) NO

Sample Analytical Parameter	Analytical Method
VOC's 11/11/10	SW 8260B
TPH-GRO 11/11/10	SW 8015 B
TPH-DRO 11/7/10	8015 B Modified
Metals 11/7/10	SW 6010 B

Collected by: J. Bennett ; B. Clowers
Logged by: B. Clowers
Reviewed by: B. Clowers

DESCRIPTION:
Sample taken at SS-39 at Sump Cluster 1.

Sample Location

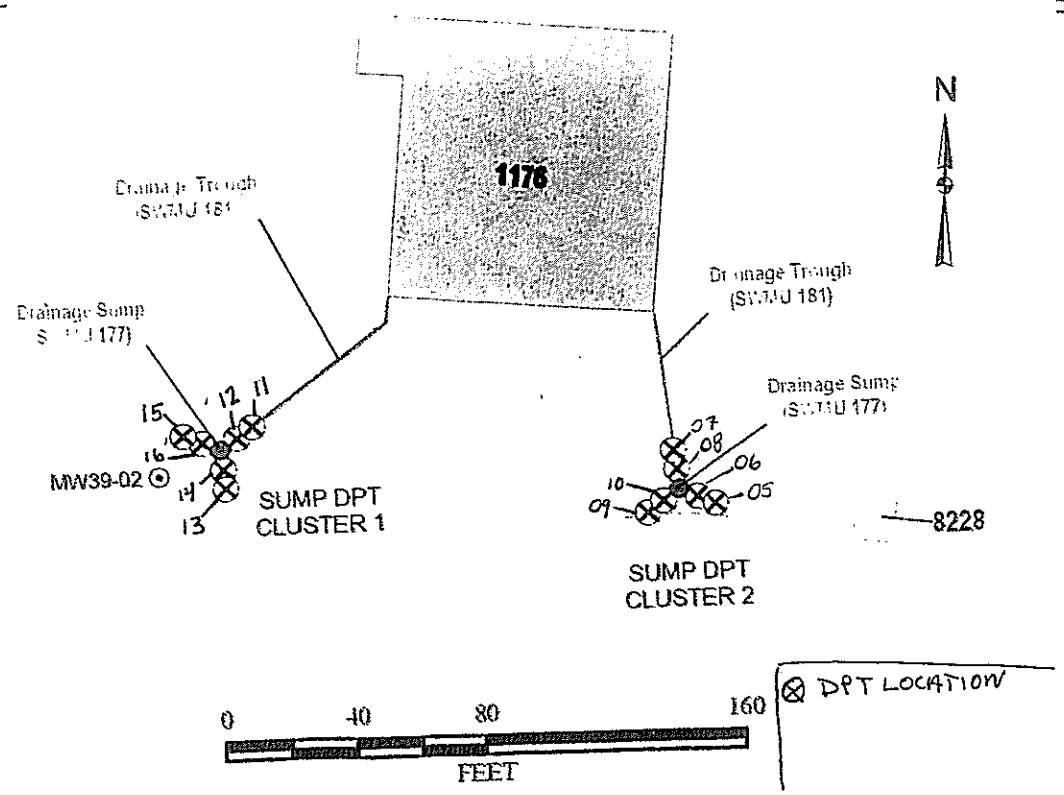

Sample Collection Log

Project Name: Holloman AFB
Project Number: T73002-1 Task 11.06.02
Investigation Site: SD-39 Missile Fuel Spill Area (SWMUs 165,177,179, & 181)

Collection Date: 11/7/10 - 11/11/10
Collection Time: 1605 - 1010
COC Number: NA

Sample Number: SS39-DPT-11c

Soil Samples
Sample Interval bgs (ft): 10.0-12.0
Headspace Reading (ppm): Ø
Purpose: **Chemical** **Geotechnical**
Sample Composited after VOC Collection: **YES** **NO**

Sample Analytical Parameter	Analytical Method
VOC's 11/11/10	SW 8260B
TPH-GRO 11/11/10	SW 8015 B
TPH-DRO 11/7/10	8015 B Modified
Metals 11/7/10	SW 6010 B

Collected by: J. Bennett ; B. Clowers
Logged by: B. Clowers
Reviewed by: B. Clowers

DESCRIPTION:
Sample taken at SS-39 at sump cluster 1.

Sample Location

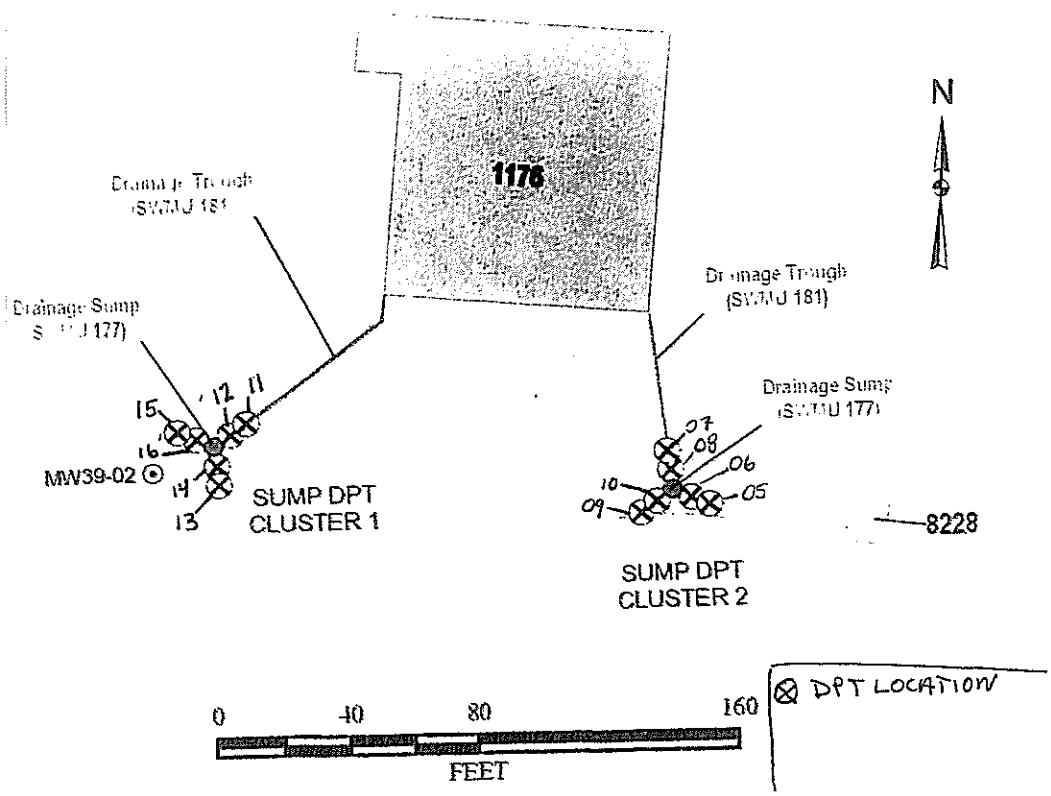

Sample Collection Log

Project Name: Holloman AFB
Project Number: T93002-1 Task 11.06.02
Investigation Site: SD-39 Missile Fuel Spill Area (SWMUs 165,177,179, & 181)

Collection Date: 11/7/10 - 11/11/10
Collection Time: 1615 - 1015
COC Number: NA

Sample Number: SS39-DPT-12A

Soil Samples
Sample Interval bgs (ft): 2.0-4.0
Headspace Reading (ppm): Ø
Purpose: (Chemical) Geotechnical
Sample Composited after VOC Collection: (YES) NO

Sample Analytical Parameter	Analytical Method
VOC's 11/11/10	SW 8260B
TPH-GRO 11/11/10	SW 8015 B
TPH-DRO 11/7/10	8015 B Modified
Metals 11/7/10	SW 6010 B

Collected by: J. Bennett ; B. Clowers
Logged by: B. Clowers
Reviewed by: B. Clowers

DESCRIPTION:
Sample taken at SS-39 at sump cluster 1.

Sample Location S

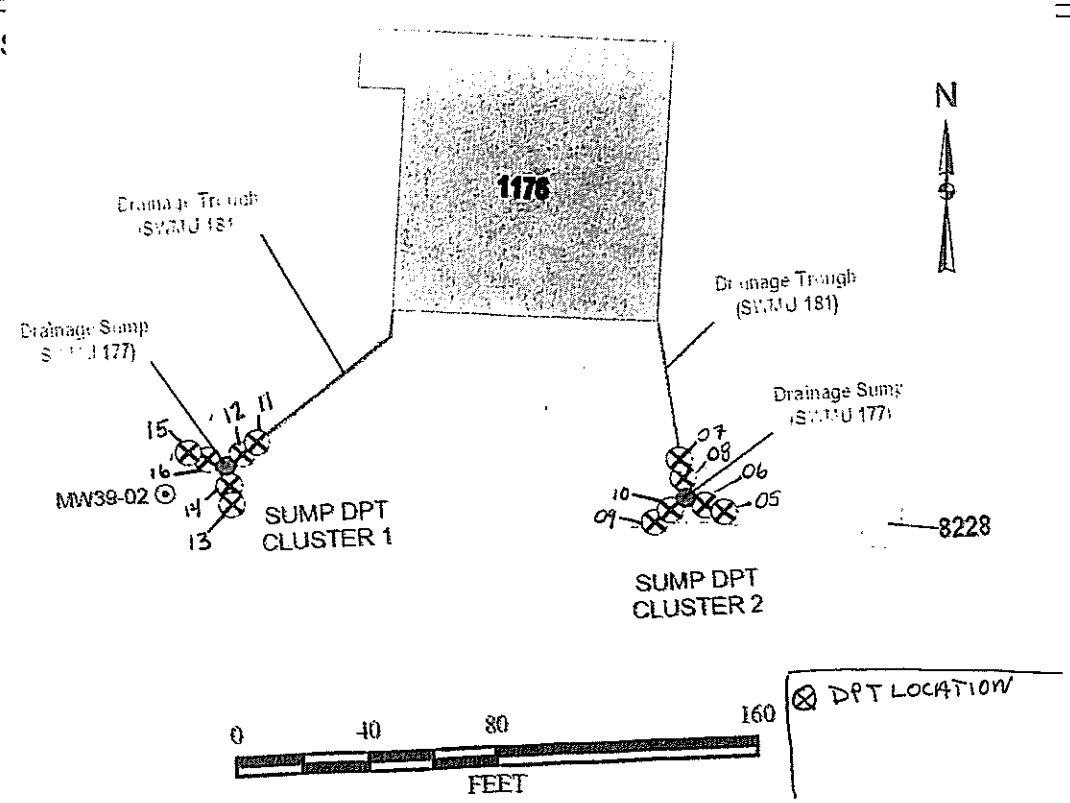

Sample Collection Log

Project Name: Holloman AFB
Project Number: T93002-1 Task 11.06.02
Investigation Site: SD-39 Missile Fuel Spill Area (SWMUs 165,177,179, & 181)

Collection Date: 11/7/10 - 11/11/10
Collection Time: 1620 - 1020
COC Number: NA

Sample Number: SS39-DPT-12B

Soil Samples
Sample Interval bgs (ft): 5.75 - 7.75
Headspace Reading (ppm): Ø
Purpose: Chemical Geotechnical
Sample Composited after VOC Collection: YES NO

Sample Analytical Parameter		Analytical Method
VOC's	11/11/10	SW 8260B
TPH-GRO	11/11/10	SW 8015 B
TPH-DRO	11/7/10	8015 B Modified
Metals	11/7/10	SW 6010 B

Collected by: J. Bennett ; B. Clowers
Logged by: B. Clowers
Reviewed by: B. Clowers

DESCRIPTION:
Sample taken at SS-39 at sump cluster 1.

Sample Location

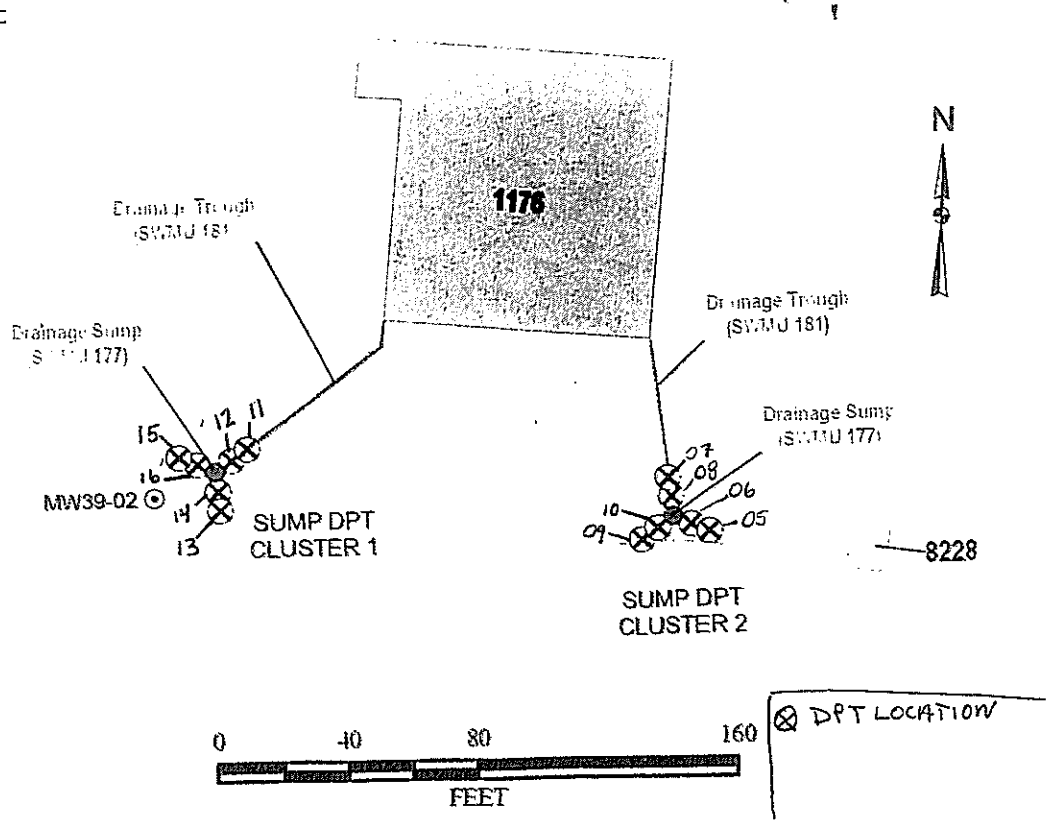

Sample Collection Log

Project Name: Holloman AFB
Project Number: T93002-1 Task 11.06.02
Investigation Site: SD-39 Missile Fuel Spill Area (SWMUs 165,177,179, & 181)

Collection Date: 11/7/10 - 11/11/10
Collection Time: 1675 - 1025
COC Number: NA

Sample Number: SS39-DPT-12C

Soil Samples
Sample Interval bgs (ft): 10.0-12.0
Headspace Reading (ppm): Ø
Purpose: **Chemical** **Geotechnical**
Sample Composited after VOC Collection: **YES** **NO**

Sample Analytical Parameter		Analytical Method
VOC's	11/11/10	SW 8260B
TPH-GRO	11/11/10	SW 8015 B
TPH-DRO	11/7/10	8015 B Modified
Metals	11/7/10	SW 6010 B

Collected by: J. Bennett ; B. Clowers
Logged by: B. Clowers
Reviewed by: B. Clowers

DESCRIPTION:
Sample taken at SS-39 at sump cluster 1

Sample Location S

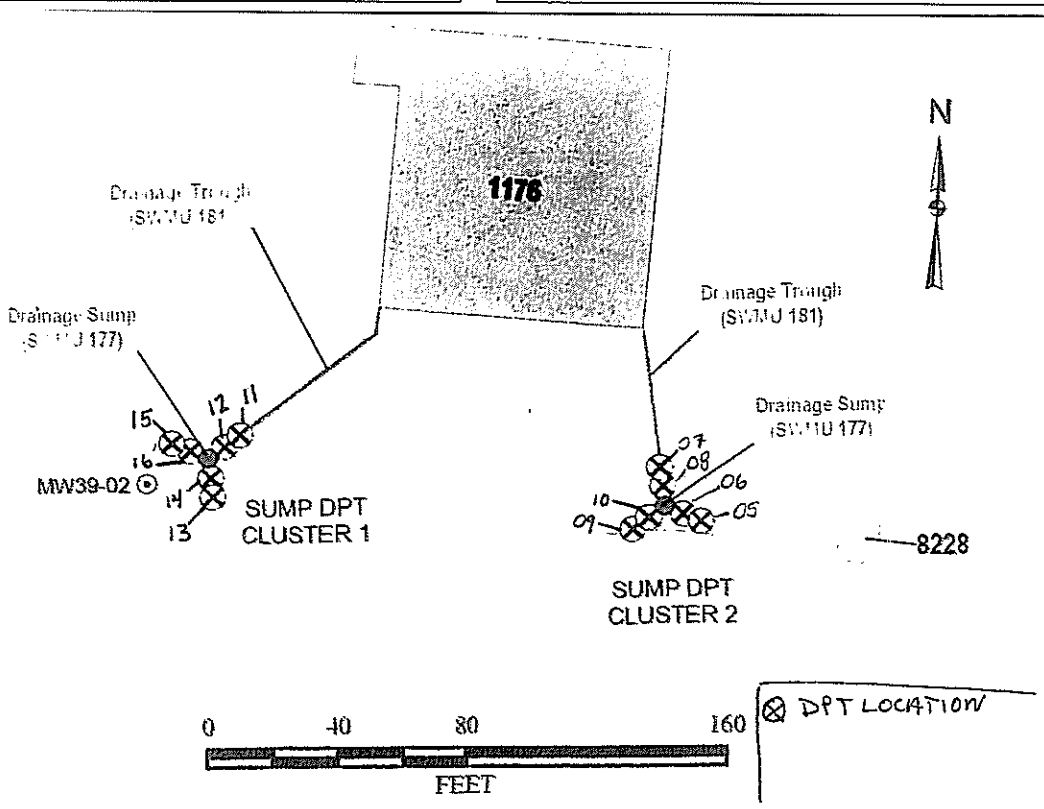

Sample Collection Log

Project Name: Holloman AFB
Project Number: T93002-1 Task 11.0602
Investigation Site: SD-39 Missile Fuel Spill Area (SWMUs 165,177,179, & 181)

Collection Date: 11/7/10 - 11/11/10
Collection Time: 1640 - 1040
COC Number: NA

Sample Number: SS39-DPT-13A

Soil Samples
Sample Interval bgs (ft): 2.0-4.0
Headspace Reading (ppm): Ø
Purpose: **Chemical** **Geotechnical**
Sample Composited after VOC Collection: **YES** **NO**

Sample Analytical Parameter	Analytical Method
VOC's 11/11/10	SW 8260B
TPH-GRO 11/11/10	SW 8015 B
TPH-DRO 11/7/10	8015 B Modified
Metals 11/7/10	SW 6010 B

Collected by: J. Bennett ; B. Clowers
Logged by: B. Clowers
Reviewed by: B. Clowers

DESCRIPTION:
Sample taken at SS-39 at Sump Cluster 1.

Sample Location :

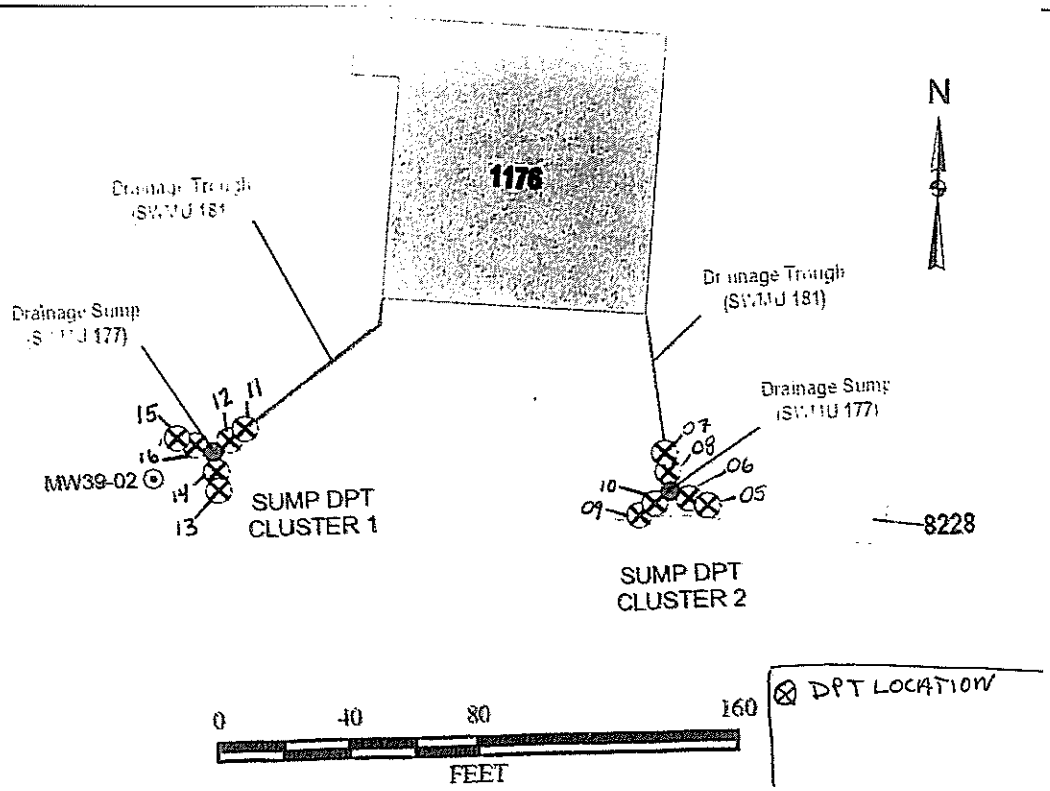

Sample Collection Log

Project Name: Holloman AFB
Project Number: T93002-1 Task 11.06.02
Investigation Site: SD-39 Missile Fuel Spill Area (SWMUs 165,177,179, & 181)

Collection Date: 11/7/10 - 11/11/10
Collection Time: 1645 - 1045
COC Number: NA

Sample Number: SS39-DPT-13B

Soil Samples
Sample Interval bgs (ft): 7.0-9.0
Headspace Reading (ppm): Ø
Purpose: **Chemical** **Geotechnical**
Sample Composited after VOC Collection: **YES** **NO**

Sample Analytical Parameter	Analytical Method
VOC's 11/11/10	SW 8260B
TPH-GRO 11/11/10	SW 8015 B
TPH-DRO 11/7/10	8015 B Modified
Metals 11/7/10	SW 6010 B

Collected by: J. Bennett ; B. Clowers
Logged by: B. Clowers
Reviewed by: B. Clowers

DESCRIPTION:
Sample taken at SS-39 at sump cluster 1.

Sample Location

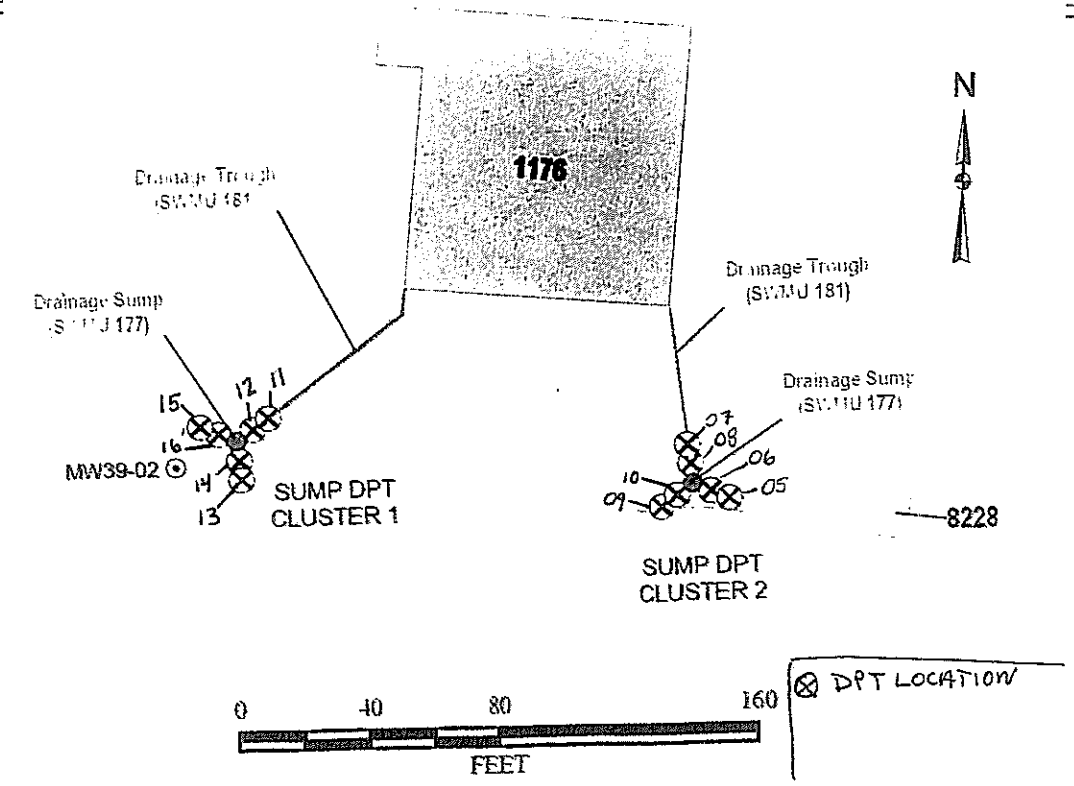

Sample Collection Log

Project Name: Holloman AFB
Project Number: T93002-1 Task 11.06.02
Investigation Site: SD-39 Missile Fuel Spill Area (SWMUs 165,177,179, & 181)

Collection Date: 11/7/10 - 11/11/10
Collection Time: 1650 - 1050
COC Number: NA

Sample Number: SS39-DPT-13C

Soil Samples
Sample Interval bgs (ft): 10.0 - 12.0
Headspace Reading (ppm): Ø
Purpose: **Chemical** **Geotechnical**
Sample Composited after VOC Collection: **YES** **NO**

Sample Analytical Parameter		Analytical Method
VOC's	11/11/10	SW 8260B
TPH-GRO	11/11/10	SW 8015 B
TPH-DRO	11/7/10	8015 B Modified
Metals	11/7/10	SW 6010 B

Collected by: J. Bennett ; B. Clowers
Logged by: B. Clowers
Reviewed by: B. Clowers

DESCRIPTION:
Sample taken at SS-39 at Sump Cluster 1.

Sample Location

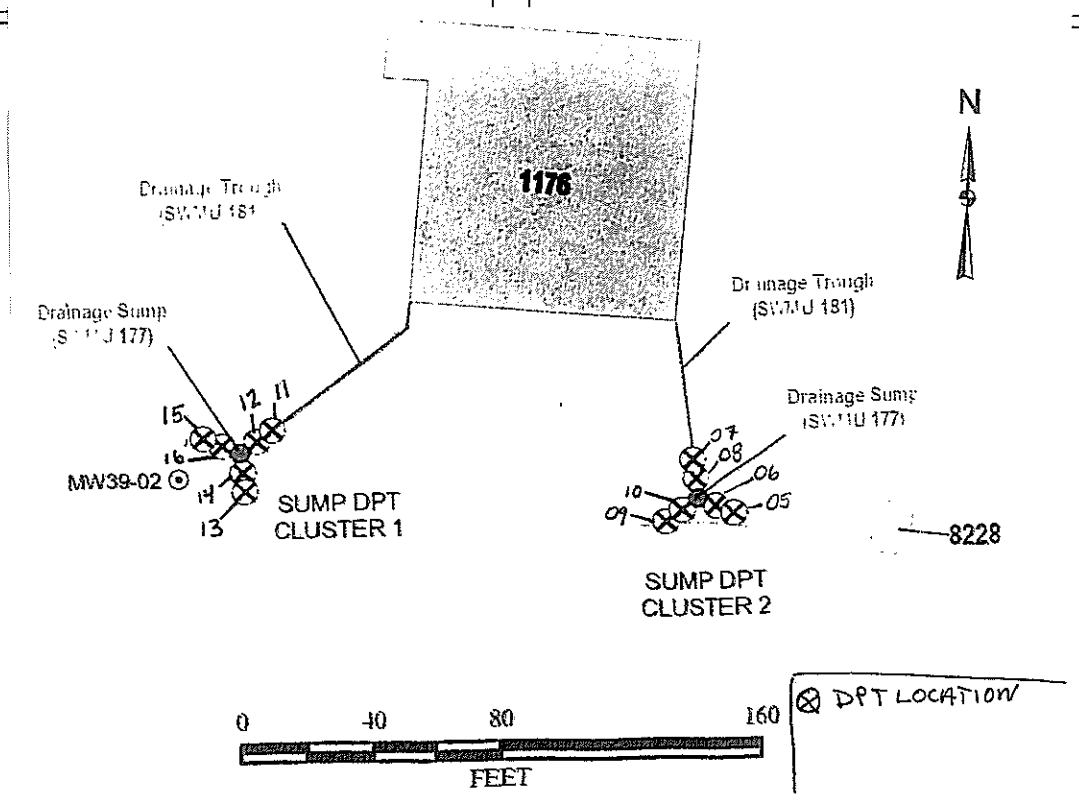

Sample Collection Log

Project Name: Holloman AFB
Project Number: T93002-1 Task 11.06.02
Investigation Site: SD-39 Missile Fuel Spill Area (SWMUs 165,177,179, & 181)

Collection Date: 11/7/10 - 11/11/10
Collection Time: 1700 - 1100
COC Number: N/A

Sample Number: SS39-DPT-14A

Soil Samples
Sample Interval bgs (ft): 2.0-4.0
Headspace Reading (ppm): Ø
Purpose: **Chemical** **Geotechnical**
Sample Composited after VOC Collection: **YES** **NO**

Sample Analytical Parameter		Analytical Method
VOC's	11/11/10	SW 8260B
TPH-GRO	11/11/10	SW 8015 B
TPH-DRO	11/7/10	8015 B Modified
Metals	11/7/10	SW 6010 B

Collected by: J. Bennett ; B. Clowers
Logged by: B. Clowers
Reviewed by: B. Clowers

DESCRIPTION:
Sample taken at SS-39 at Sump Cluster 1.

Sample Location

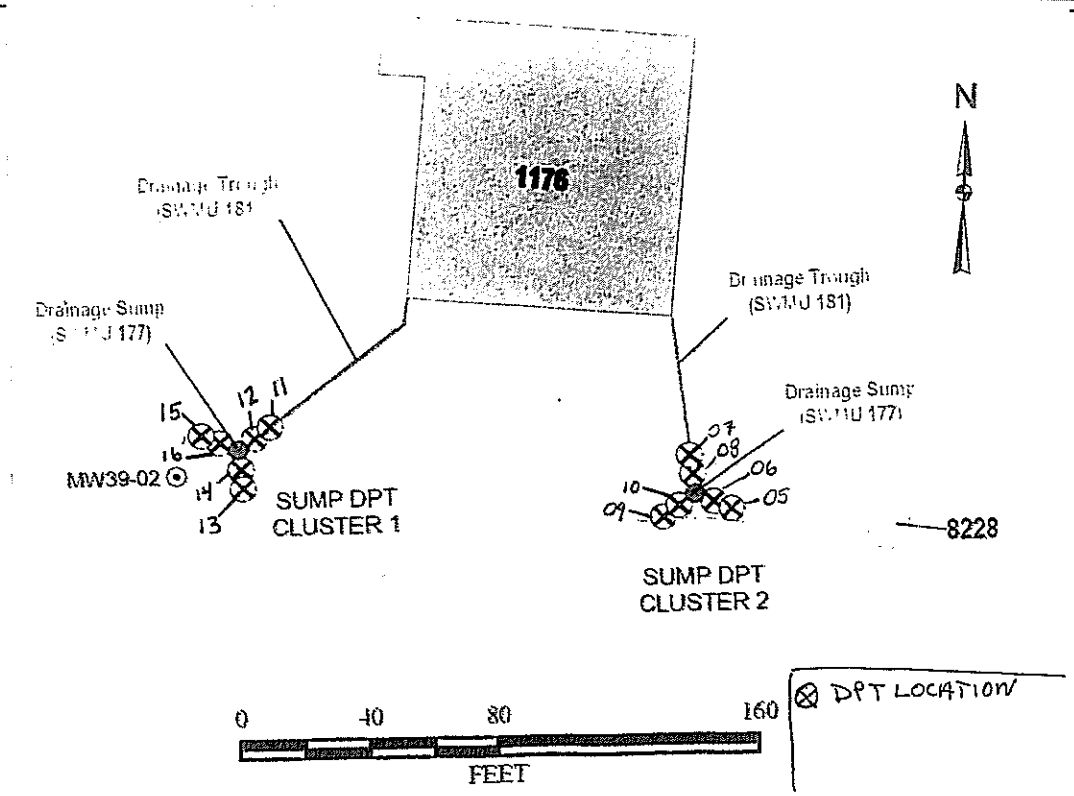

Sample Collection Log

Project Name: Holloman AFB
Project Number: T93002-1 Task 11.06.02
Investigation Site: SD-39 Missile Fuel Spill Area (SWMUs 165,177,179, & 181)

Collection Date: 11/7/10 - 11/11/10
Collection Time: 1710 - 1105
COC Number: NA

Sample Number: SS39-DPT-14B

Soil Samples
Sample Interval bgs (ft): 5.50 - 7.50
Headspace Reading (ppm): Ø
Purpose: (Chemical) Geotechnical
Sample Composited after VOC Collection: (YES) NO

Sample Analytical Parameter	Analytical Method
VOC's 11/11/10	SW 8260B
TPH-GRO 11/11/10	SW 8015 B
TPH-DRO 11/7/10	8015 B Modified
Metals 11/7/10	SW 6010 B

Collected by: J. Bennett ; B. Clowers
Logged by: B. Clowers
Reviewed by: B. Clowers

DESCRIPTION:
Sample taken at SS-39 at sump cluster 1.

Sample Location

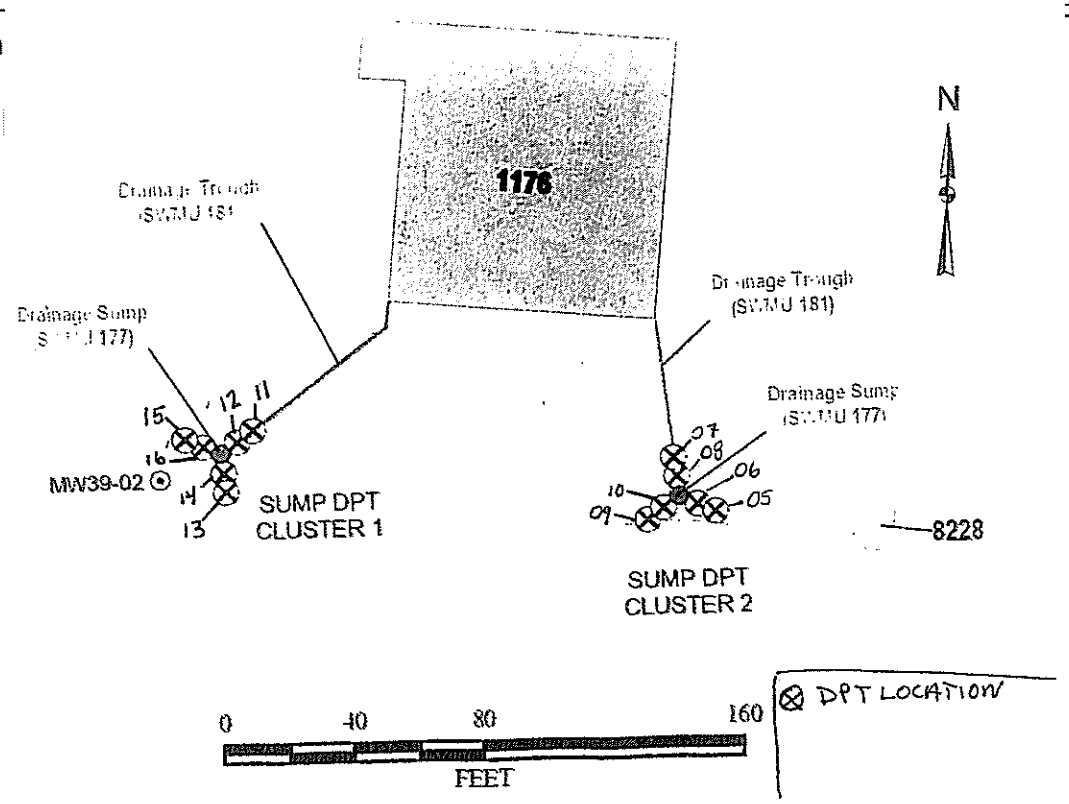

Sample Collection Log

Project Name: Holloman AFB
Project Number: T93002-1 Task 11.06.02
Investigation Site: SD-39 Missile Fuel Spill Area (SWMUs 165,177,179, & 181)

Collection Date: 11/7/10 - 11/11/10
Collection Time: 1517 - 1110
COC Number: NA

Sample Number: SS39-DPT-14C

Soil Samples
Sample Interval bgs (ft): 10.0-12.0
Headspace Reading (ppm): Ø
Purpose: **Chemical** **Geotechnical**
Sample Composited after VOC Collection: **YES** **NO**

Sample Analytical Parameter	Analytical Method
VOC's 11/11/10	SW 8260B
TPH-GRO 11/11/10	SW 8015 B
TPH-DRO 11/7/10	8015 B Modified
Metals 11/7/10	SW 6010 B

Collected by: J. Bennett ; B. Clowers
Logged by: B. Clowers
Reviewed by: B. Clowers

DESCRIPTION:
Sample taken at SS-39 at Sump Cluster 1.

Sample Location

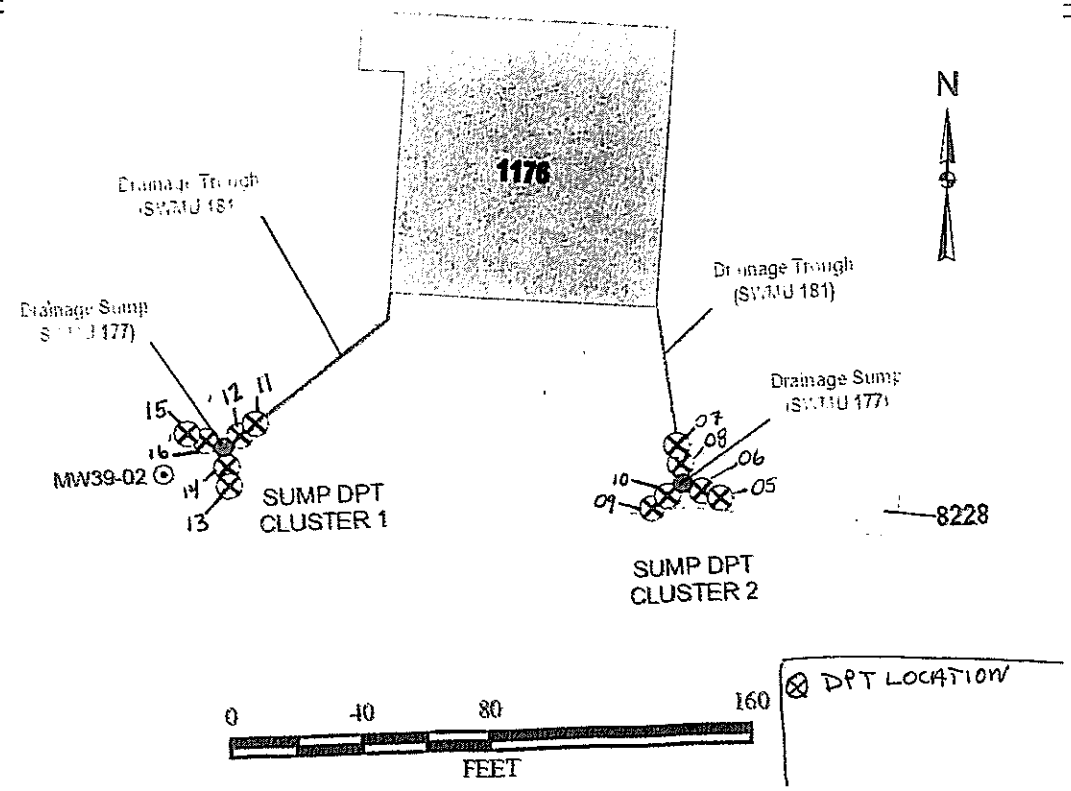

Sample Collection Log

Project Name: Holloman AFB
Project Number: T93002-1 Task 11.06.02
Investigation Site: SD-39 Missile Fuel Spill Area (SWMUs 165,177,179, & 181)

Collection Date: 11/8/10
Collection Time: 0920
COC Number: NA

Sample Number: SS39-DPT-15A

Soil Samples
Sample Interval bgs (ft): 2.0-4.0
Headspace Reading (ppm): 0.1
Purpose: **Chemical** **Geotechnical**
Sample Composited after VOC Collection: **YES** **NO**

Sample Analytical Parameter	Analytical Method
VOC's	SW 8260B
TPH-GRO	SW 8015 B
TPH-DRO	8015 B Modified
Metals	SW 6010 B

Collected by: J. Bennett ; B. Clowers
Logged by: B. Clowers
Reviewed by: B. Clowers

DESCRIPTION:
Sample taken at SS-39 at sump cluster 1.

Sample Location

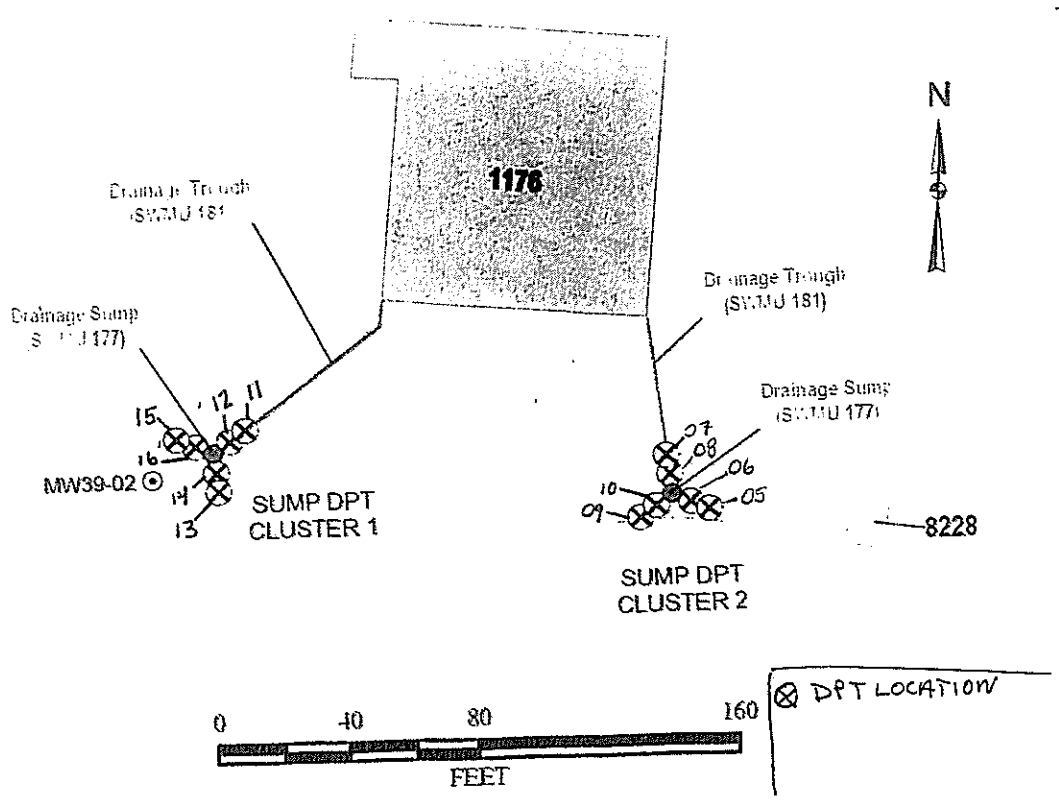

Sample Collection Log

Project Name: Holloman AFB
Project Number: T93002-1 Task 11.06.02
Investigation Site: SD-39 Missile Fuel Spill Area (SWMUs 165,177,179, & 181)

Collection Date: 11/8/10
Collection Time: 0935
COC Number: NA

Sample Number: SS39-DPT-15B

Soil Samples
Sample Interval bgs (ft): 6.0-8.0
Headspace Reading (ppm): Ø
Purpose: **Chemical** **Geotechnical**
Sample Composited after VOC Collection: **YES** **NO**

Sample Analytical Parameter	Analytical Method
VOC's	SW 8260B
TPH-GRO	SW 8015 B
TPH-DRO	8015 B Modified
Metals	SW 6010 B

Collected by: J. Bennett ; B. Clowers
Logged by: B. Clowers
Reviewed by: B. Clowers

DESCRIPTION:
Sample taken at SS-39 at sump cluster 1.

Sample Location S

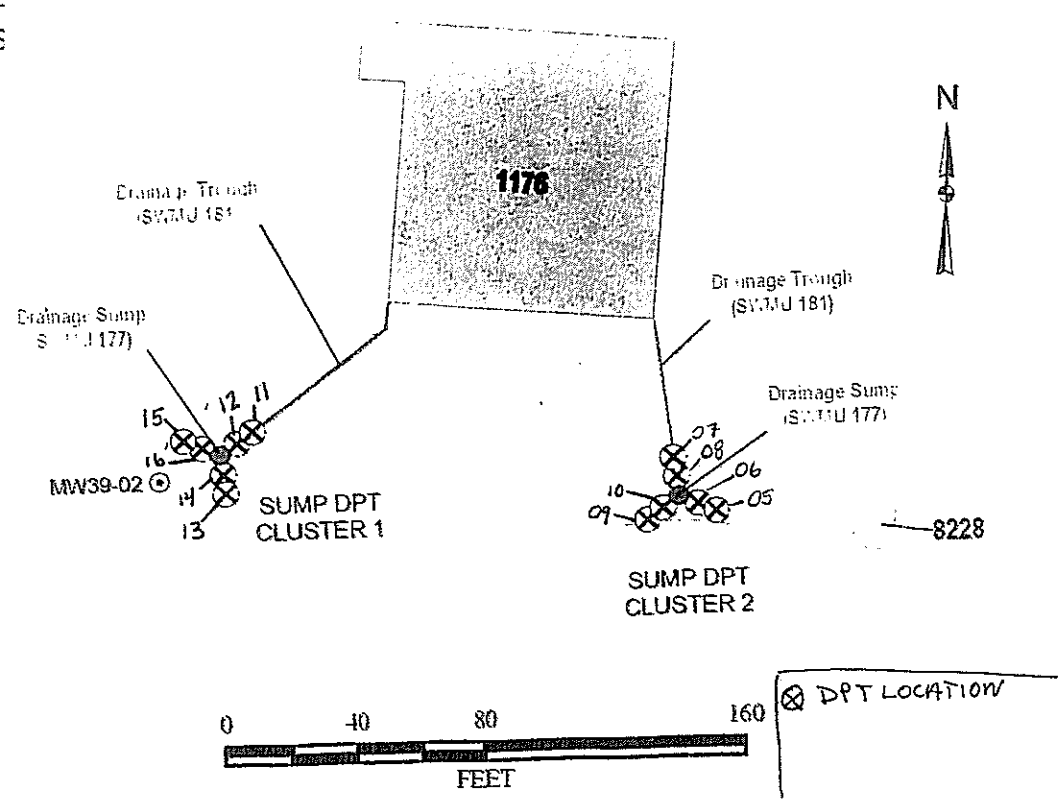

Sample Collection Log

Project Name: Holloman AFB
Project Number: T93002-1 Task 11.06.02
Investigation Site: SD-39 Missile Fuel Spill Area (SWMUs 165,177,179, & 181)

Collection Date: 11/8/10
Collection Time: 0950
COC Number: NA

Sample Number: SS39-DPT-15C

Soil Samples
Sample Interval bgs (ft): 10.0-12.0
Headspace Reading (ppm): 0
Purpose: Chemical Geotechnical
Sample Composited after VOC Collection: YES NO

Sample Analytical Parameter	Analytical Method
VOC's	SW 8260B
TPH-GRO	SW 8015 B
TPH-DRO	8015 B Modified
Metals	SW 6010 B

Collected by: J. Bennett ; B. Clowers
Logged by: B. Clowers
Reviewed by: B. Clowers

DESCRIPTION:
Sample taken at SS-39 at Sump cluster 1.

Sample Location

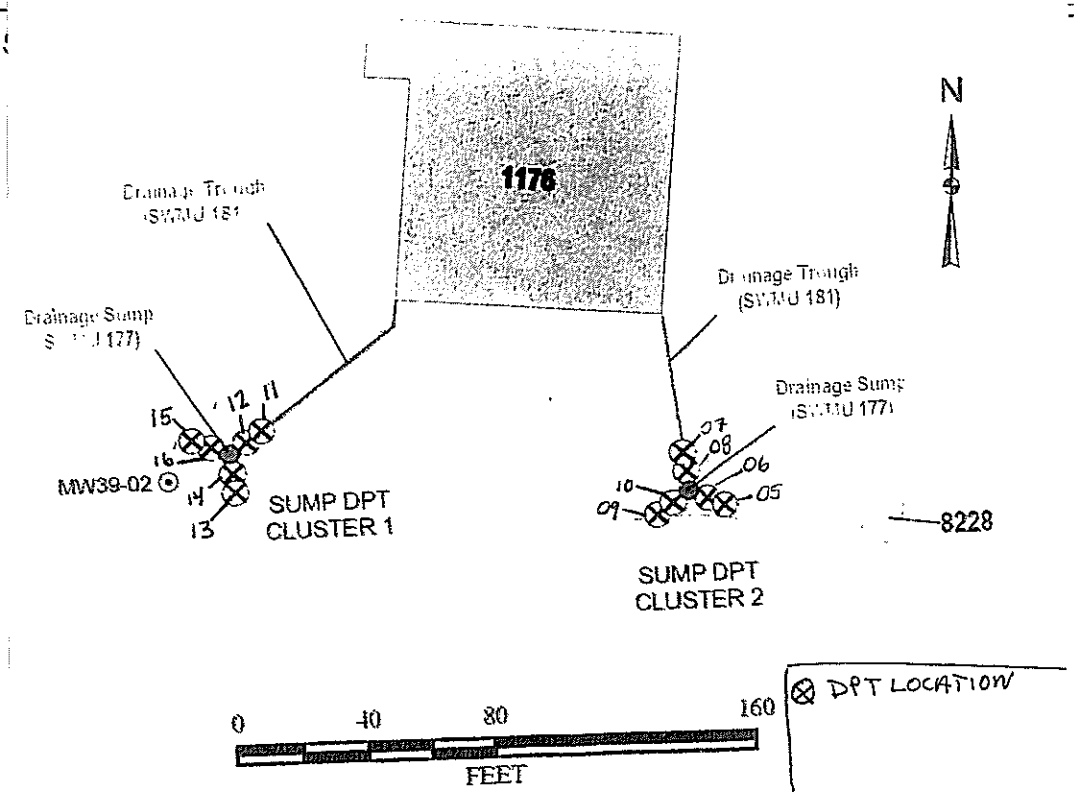

Sample Collection Log

Project Name: Holloman AFB
Project Number: T93002-1 Task 11.06.02
Investigation Site: SD-39 Missile Fuel Spill Area (SWMUs 165,177,179, & 181)

Collection Date: 11/8/10
Collection Time: 1015
COC Number: NA

Sample Number: SS39-DPT-16A

Soil Samples
Sample Interval bgs (ft): 1.5-3.5
Headspace Reading (ppm): Ø
Purpose: **Chemical** **Geotechnical**
Sample Composited after VOC Collection: **YES** **NO**

Sample Analytical Parameter	Analytical Method
VOC's	SW 8260B
TPH-GRO	SW 8015 B
TPH-DRO	8015 B Modified
Metals	SW 6010 B

Collected by: J. Bennett ; B. Clowers
Logged by: B. Clowers
Reviewed by: B. Clowers

DESCRIPTION:
Sample taken at SS-39 at Sump Cluster 1.

Sample Location

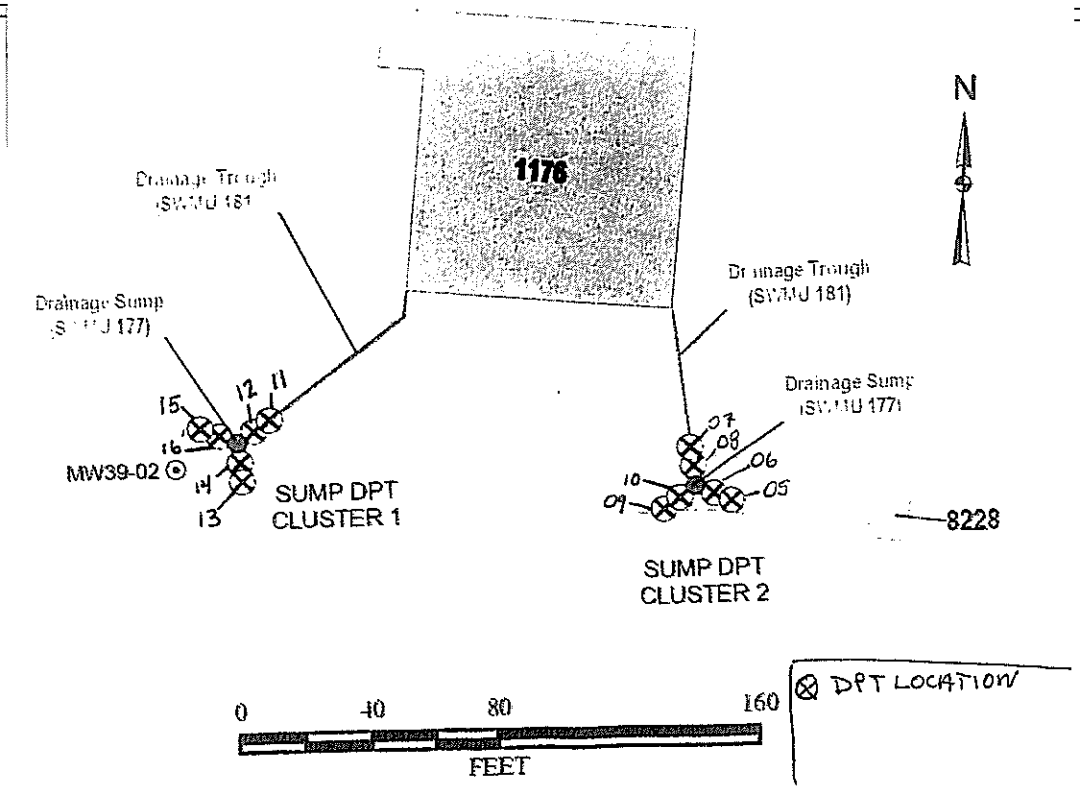

Sample Collection Log

Project Name: Holloman AFB
Project Number: T93002-1 Task 11.06.02
Investigation Site: SD-39 Missile Fuel Spill Area (SWMUs 165,177,179, & 181)

Collection Date: 11/8/10
Collection Time: 1020
COC Number: N4

Sample Number: SS39-DPT-16B

Soil Samples
Sample Interval bgs (ft): 5.0-7.0
Headspace Reading (ppm): Ø
Purpose: **Chemical** **Geotechnical**
Sample Composited after VOC Collection: **YES** **NO**

Sample Analytical Parameter	Analytical Method
VOC's	SW 8260B
TPH-GRO	SW 8015 B
TPH-DRO	8015 B Modified
Metals	SW 6010 B

Collected by: J. Bennett ; B. Clowers
Logged by: B. Clowers
Reviewed by: B. Clowers

DESCRIPTION:
Sample taken at SS-39 at sump Cluster 1.

Sample Location

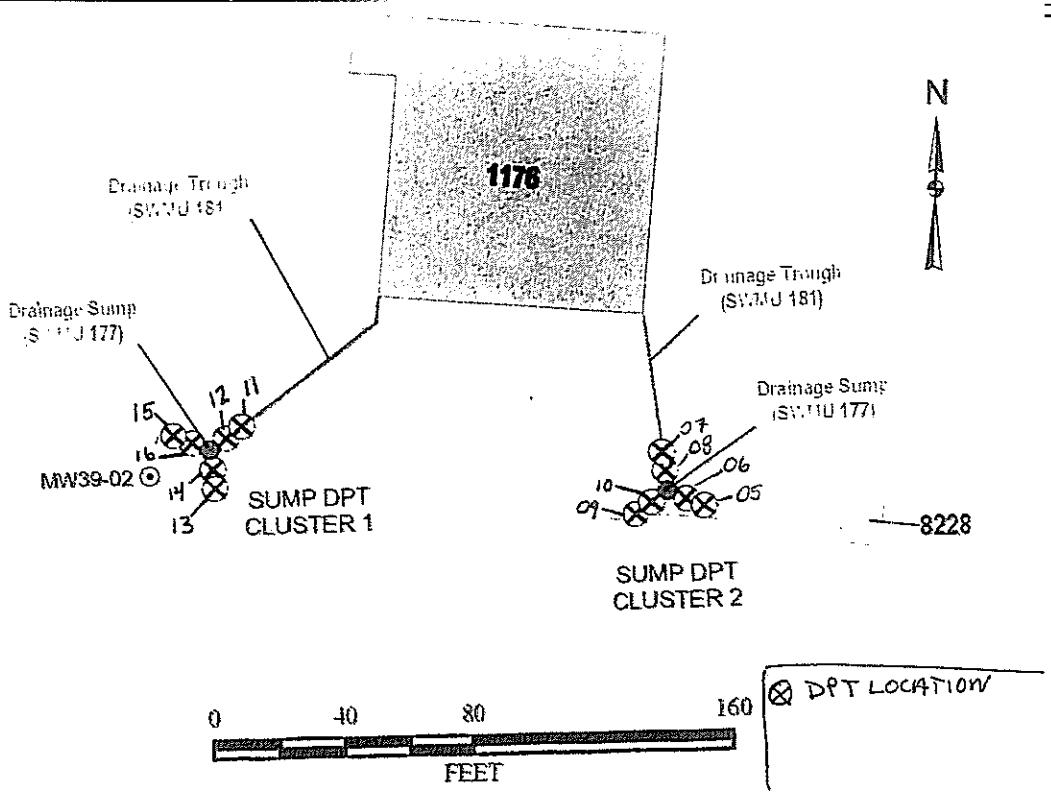

Sample Collection Log

Project Name: Holloman AFB
Project Number: T93002-1 Task 11.06.02
Investigation Site: SD-39 Missile Fuel Spill Area (SWMUs 165,177,179, & 181)

Collection Date: 11/8/10
Collection Time: 1030
COC Number: NA

Sample Number: SS39-DPT-16C

Soil Samples
Sample Interval bgs (ft): 10.0-12.0
Headspace Reading (ppm): Ø
Purpose: (Chemical) Geotechnical
Sample Composited after VOC Collection: (YES) NO

Sample Analytical Parameter	Analytical Method
VOC's	SW 8260B
TPH-GRO	SW 8015 B
TPH-DRO	8015 B Modified
Metals	SW 6010 B

Collected by: J. Bennett ; B. Clowers
Logged by: B. Clowers
Reviewed by: B. Clowers

DESCRIPTION:
Sample taken at SS-39 at Sump Cluster 1.

Sample Location :

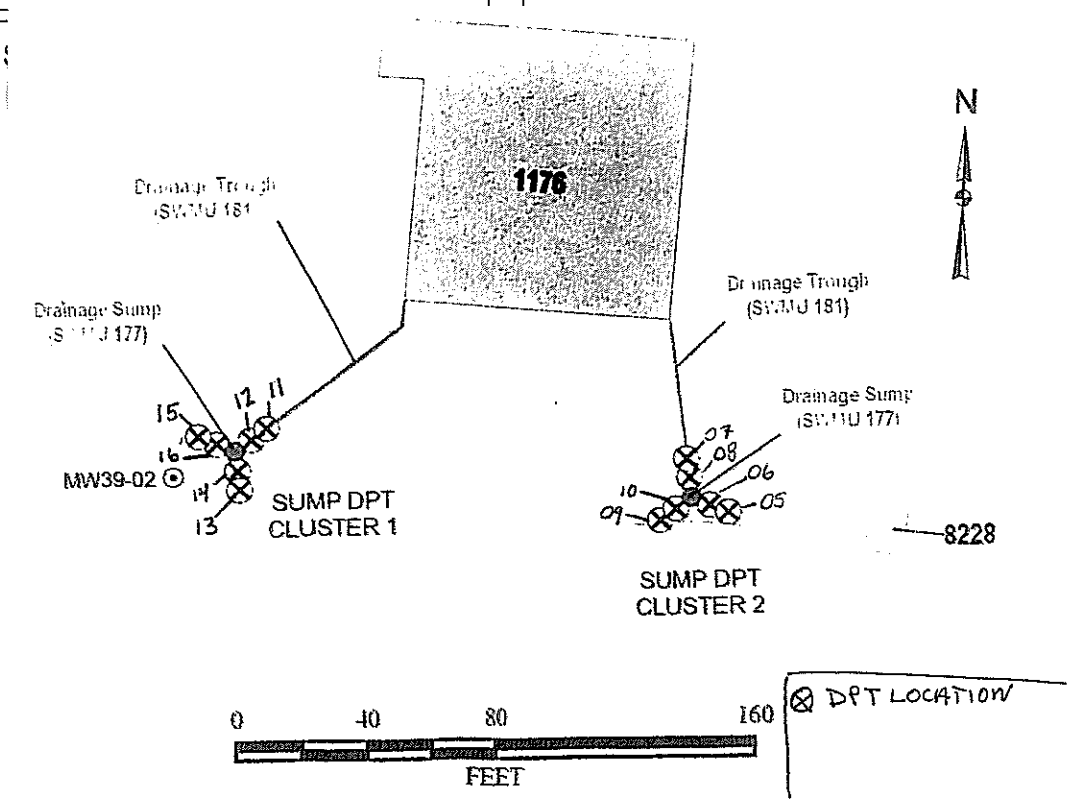

Sample Collection Log

Project Name: Holloman AFB
Project Number: 793002-1 Task 11.06.02
Investigation Site: SD-39 Missile Fuel Spill Area (SWMUs 165,177,179, & 181)

Collection Date: 11/6/10 - 11/11/10
Collection Time: 1450 - 0800
COC Number: NA

Sample Number: SS39-DPT-DUP01

Soil Samples
Sample Interval bgs (ft): 10.0 - 12.0
Headspace Reading (ppm): Ø
Purpose: **Chemical** **Geotechnical**
Sample Composited after VOC Collection: **YES** **NO**

Sample Analytical Parameter	Analytical Method
VOC's 11/11/10	SW 8260B
TPH-GRO 11/11/10	SW 8015 B
TPH-DRO 11/6/10	8015 B Modified
Metals 11/6/10	SW 6010 B

Collected by: J. Bennett ; B. Clowers
Logged by: B. Clowers
Reviewed by: B. Clowers

DESCRIPTION:
Sample taken at SS-39 at Sump Cluster 2. Dup of SS39-DPT-07C

Sample Location

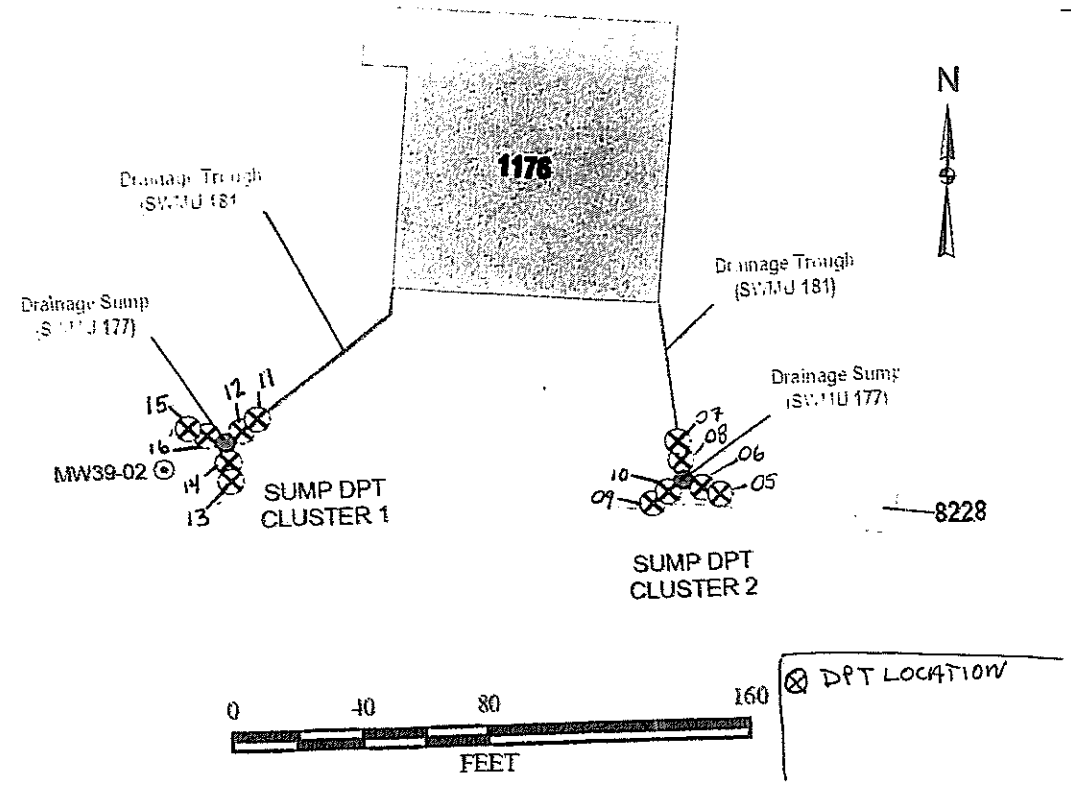

Sample Collection Log

Project Name: Holloman AFB
Project Number: T93002-1 Task 11.06.02
Investigation Site: SD-39 Missile Fuel Spill Area (SWMUs 165,177,179, & 181)

Collection Date: 11/6/10 - 11/11/10
Collection Time: 1635 - 0915
COC Number: NA

Sample Number: SS39-DPT-DUP02

Soil Samples
Sample Interval bgs (ft): 10.0 - 12.0
Headspace Reading (ppm): Ø
Purpose: **Chemical** **Geotechnical**
Sample Composited after VOC Collection: **YES** **NO**

Sample Analytical Parameter	Analytical Method
VOC's 11/11/10	SW 8260B
TPH-GRO 11/11/10	SW 8015 B
TPH-DRO 11/6/10	8015 B Modified
Metals 11/6/10	SW 6010 B

Collected by: J. Bennett ; B. Clowers
Logged by: B. Clowers
Reviewed by: B. Clowers

DESCRIPTION:
Sample taken at SS-39 at Sump Cluster 1.
Dup of SS39-DPT-10C

Sample Location

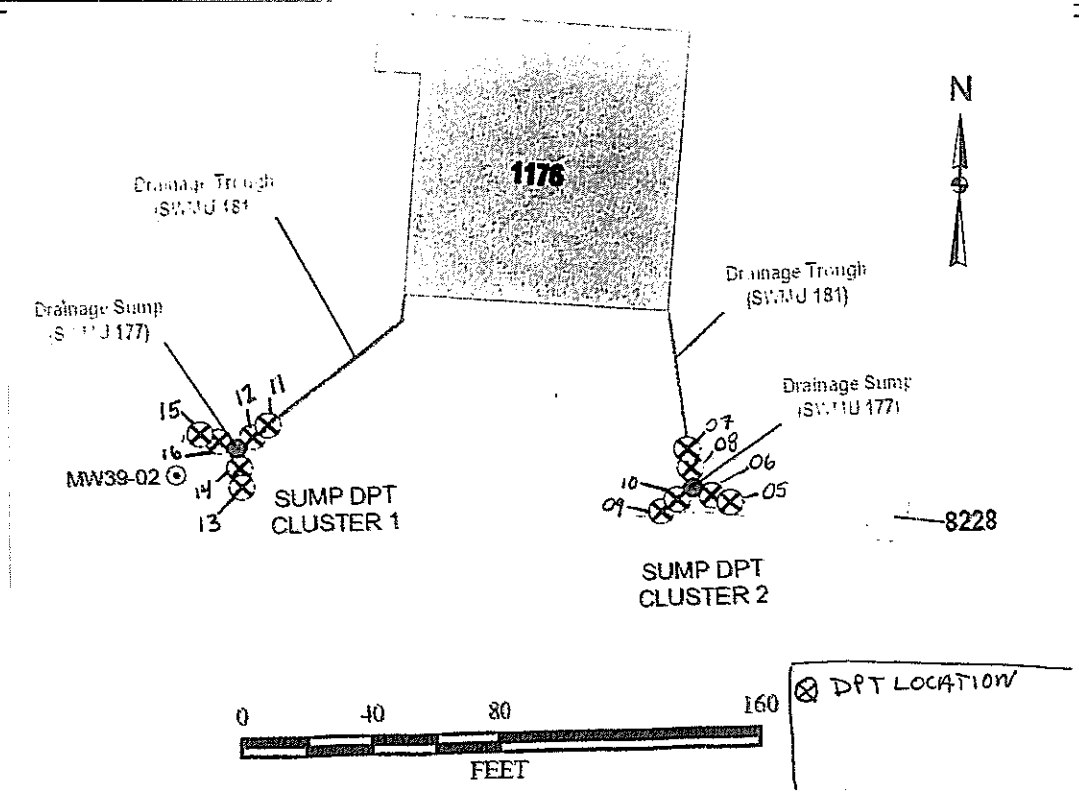

Sample Collection Log

Project Name: Holloman AFB
Project Number: T93002-1 Task 11.06,02
Investigation Site: SD-39 Missile Fuel Spill Area (SWMUs 165,177,179, & 181)

Collection Date: 11/7/10 – 11/11/10
Collection Time: 1700 - 1100
COC Number: NA

Sample Number: SS39-DPT-DUP03

Soil Samples
Sample Interval bgs (ft): 2.0-4.0
Headspace Reading (ppm): Ø
Purpose: **Chemical** **Geotechnical**
Sample Composited after VOC Collection: **YES** **NO**

Sample Analytical Parameter	Analytical Method
VOC's 11/11/10	SW 8260B
TPH-GRO 11/11/10	SW 8015 B
TPH-DRO 11/7/10	8015 B Modified
Metals 11/7/10	SW 6010 B

Collected by: J. Bennett ; B. Clowers
Logged by: B. Clowers
Reviewed by: B.Clowers

DESCRIPTION:
Sample taken at SS-39 at Sump Cluster 1.
Dup of SS39-DPT-14A

Sample Location

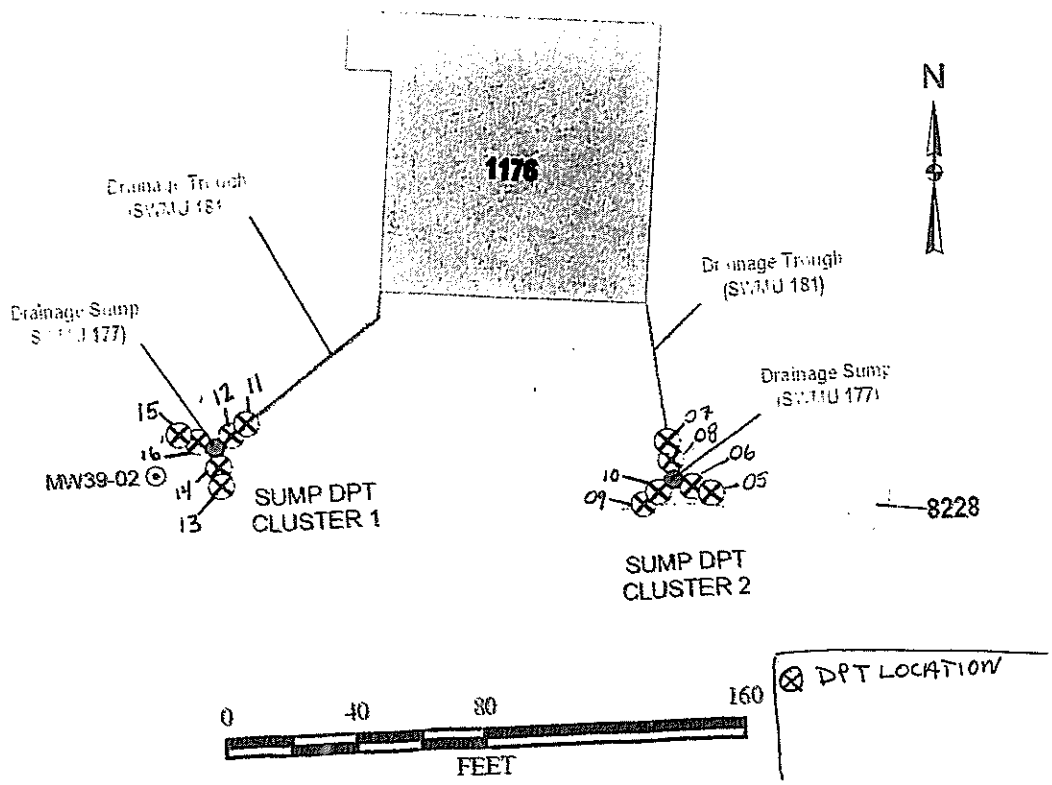

Sample Collection Log

Project Name: Holloman AFB
Project Number: T93002-1 Task 11.06.02
Investigation Site: SD-39 Missile Fuel Spill Area (SWMUs 165,177,179, & 181)

Collection Date: 11/8/10
Collection Time: 1150
COC Number: NA

Sample Number: SS39-DPT-DUP04

Soil Samples
Sample Interval bgs (ft): 6.0-8.0
Headspace Reading (ppm): Ø
Purpose: **Chemical** **Geotechnical**
Sample Composited after VOC Collection: **YES** **NO**

Sample Analytical Parameter	Analytical Method
VOC's	SW 8260B
TPH-GRO	SW 8015 B
TPH-DRO	8015 B Modified

Collected by: J. Bennett ; B. Clowers
Logged by: J. Bennett
Reviewed by: B. Clowers

DESCRIPTION:
Sample taken at SS-39 Drainage Swale.
Dup from SS39-DPT-03C

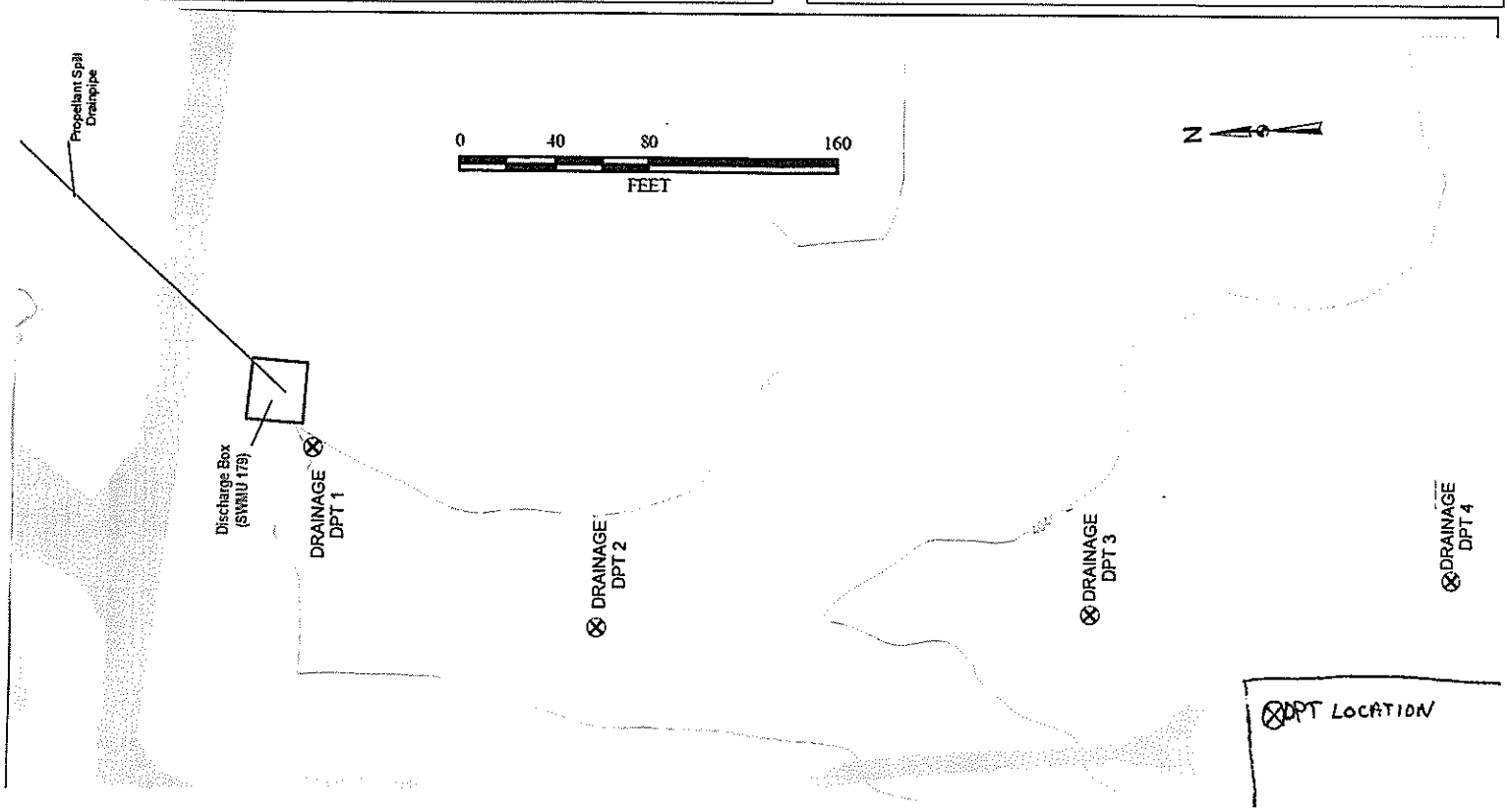

Sample Collection Log

Project Name: Holloman AFB
Project Number: T93002-1 Task 11.06.02
Investigation Site: SD-39 Missile Fuel Spill Area (SWMUs 165,177,179, & 181)

Collection Date: 11/8/10
Collection Time: 1320
COC Number: NA

Sample Number: SS39-DPT-DUP05

Soil Samples
Sample Interval bgs (ft): 0-2.0
Headspace Reading (ppm): Ø
Purpose: Chemical Geotechnical
Sample Composited after VOC Collection: YES NO

Sample Analytical Parameter	Analytical Method
VOC's	SW 8260B
TPH-GRO	SW 8015 B
TPH-DRO	8015 B Modified

Collected by: J. Bennett ; B. Clowers
Logged by: J. Bennett
Reviewed by: B. Clowers

DESCRIPTION:
Sample taken at SS-39 Drainage Swale
Dup taken from SS39-DPT-01A.

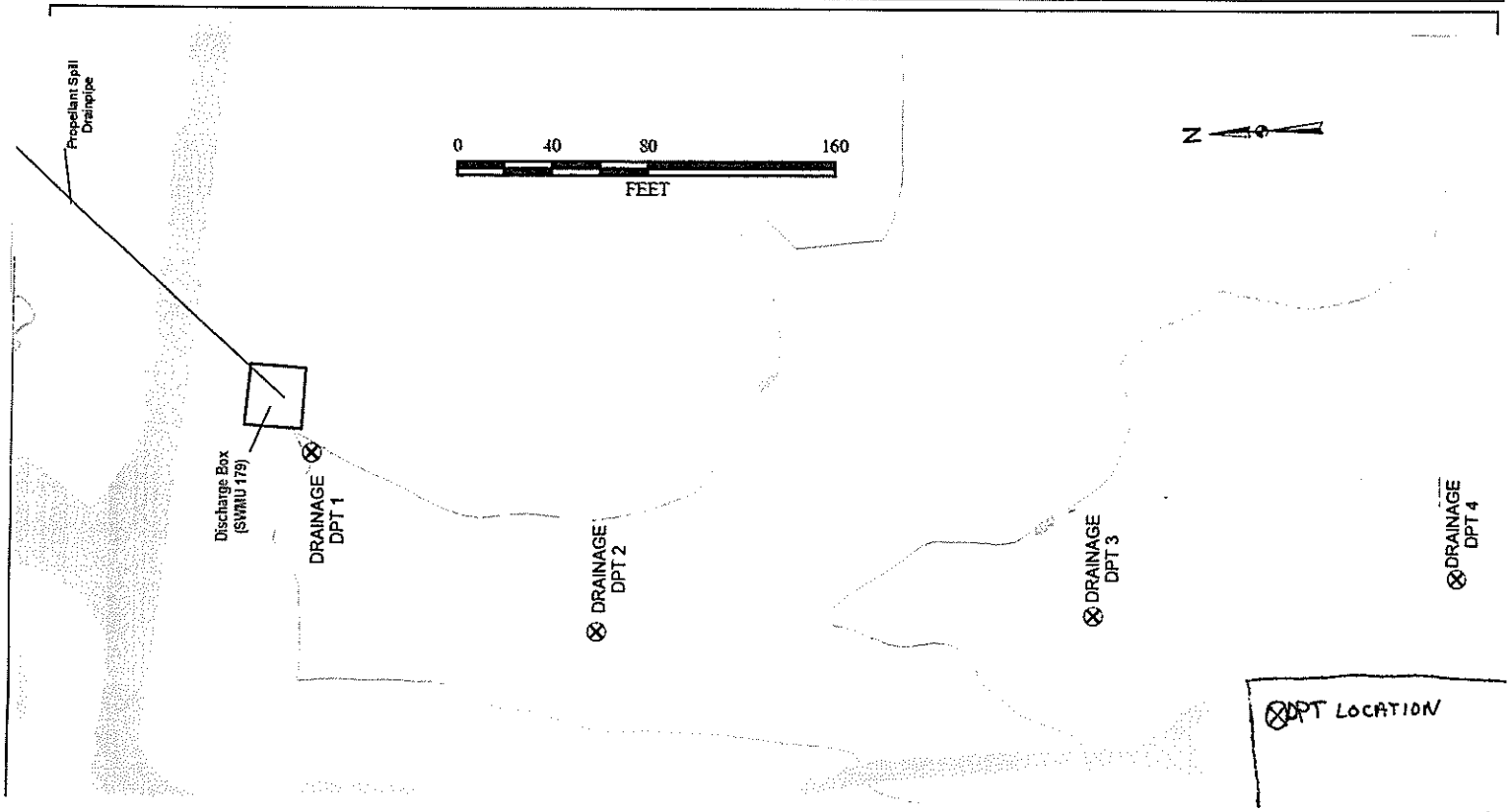

Sample Collection Log

Project Name: Holloman AFB
Project Number: T93002-1 Task 11.06.02
Investigation Site: SD-39 Missile Fuel Spill Area (SWMUs 165,177,179, & 181)

Collection Date: 11/8/10
Collection Time: 1345
COC Number: NA

Sample Number: SS39-DPT-01C-MS/MSD

Soil Samples
Sample Interval bgs (ft): 7.5-9.5
Headspace Reading (ppm): 0.1
Purpose: **Chemical** **Geotechnical**
Sample Composited after VOC Collection: **YES** **NO**

Sample Analytical Parameter	Analytical Method
VOC's	SW 8260B
TPH-GRO	SW 8015 B
TPH-DRO	8015 B Modified

Collected by: J. Bennett ; B. Clowers
Logged by: J Bennett
Reviewed by: B. Clowers

DESCRIPTION:
Sample taken at SS-39 Drainage Swale.
MS/MSD taken from SS39-DPT-01C

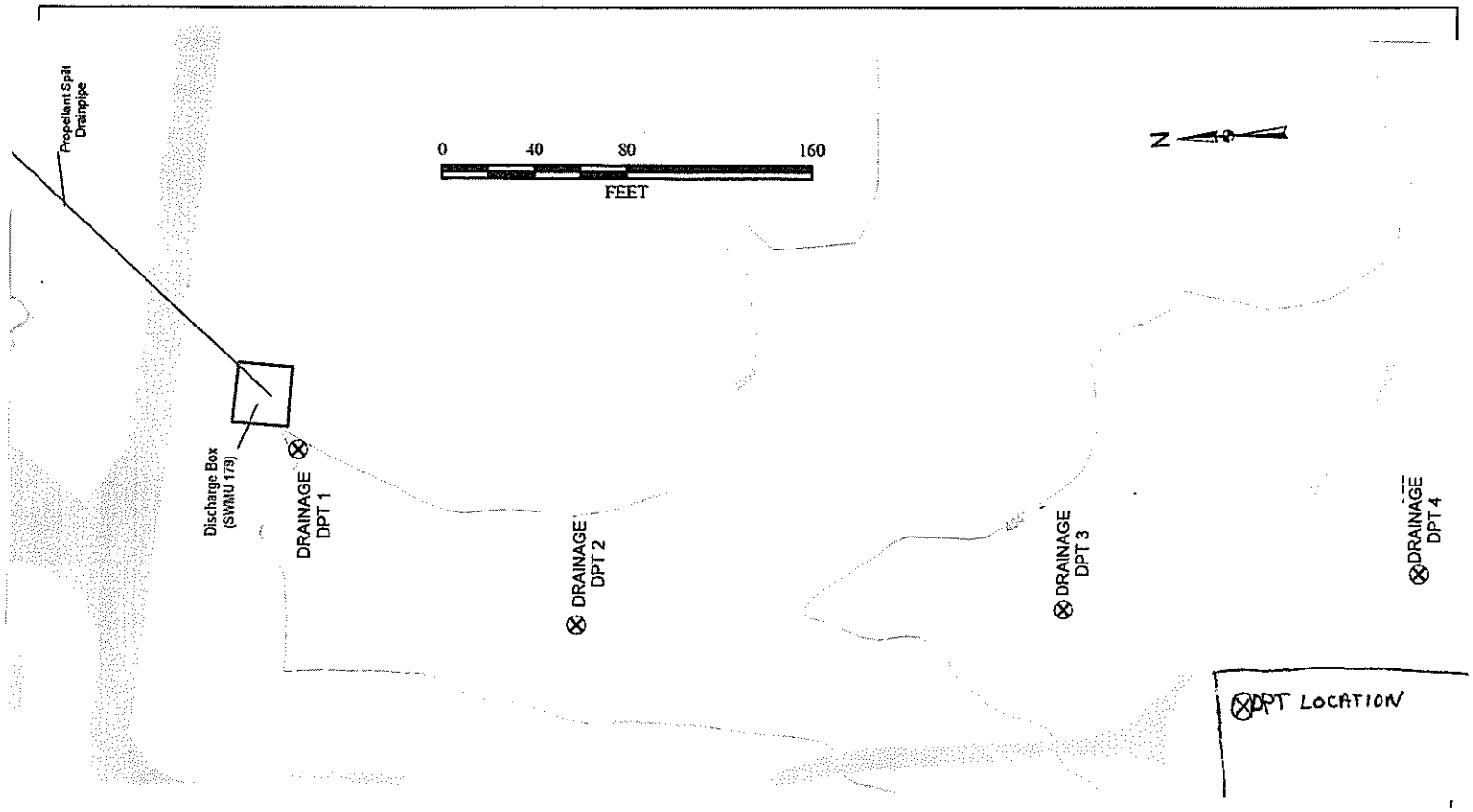

Sample Collection Log

Project Name: Holloman AFB
Project Number: T93002-1 Task 11.06.02
Investigation Site: SD-39 Missile Fuel Spill Area (SWMUs 165,177,179, & 181)

Collection Date: 11/7/10 - 11/11/10
Collection Time: 1625 - 1025
COC Number: NA

Sample Number: SS39-DPT-12C-MS/MSD

Soil Samples
Sample Interval bgs (ft): 10.0-12.0
Headspace Reading (ppm): Ø
Purpose: **Chemical** **Geotechnical**
Sample Composited after VOC Collection: **YES** **NO**

Sample Analytical Parameter	Analytical Method
VOC's 11/11/10	SW 8260B
TPH-GRO 11/11/10	SW 8015 B
TPH-DRO 11/7/10	8015 B Modified
Metals 11/7/10	SW 6010 B

Collected by: J. Bennett ; B. Clowers
Logged by: B. Clowers
Reviewed by: B. Clowers

DESCRIPTION:
Sample taken at SS-39 at Sump Cluster 1. MS/MSD taken from SS39-DPT-12C.

Sample Location :

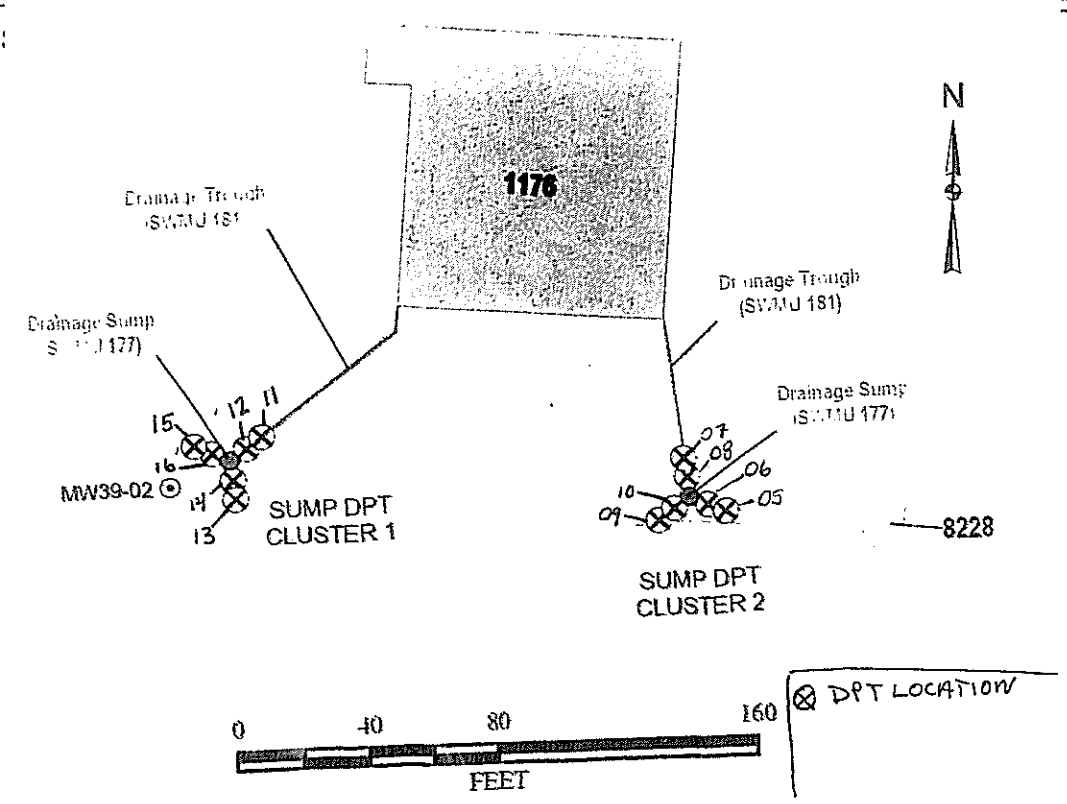

DRILLING LOG

CLIENT	AFCEE
HOLE NUMBER	SS39-DPT-01
DRILL SUBCONTRACTOR	Vista Geosciences
SHEET / SHEETS	1 of 2
PROJECT / PROJECT NUMBER	Holloman AFB / 100-TEN-T93002-1 Task 11.06.02
MANUFACTURER'S DESIGN OF DRILL	Geoprobe 7822
NAME OF DRILLER(S)	D. West / K. Geraghty
SITE NAME	SS-39
SIZES AND TYPES OF DRILLING AND SAMPLING EQUIPMENT	2.25" rods with innersampling liners.
HOLE LOCATION	SS39-DPT-01
SURFACE ELEVATION	
DATE STARTED	11/8/10
DATE COMPLETED	11/8/10
OVERBURDEN THICKNESS	NA
DEPTH DRILLED INTO ROCK	NA
TOTAL DEPTH OF HOLE	10.0'
DEPTH OF GROUNDWATER ENCOUNTERED	
DEPTH TO WATER AND ELAPSED TIME AFTER DRILLING COMPLETED	NA
OTHER WATER LEVEL MEASUREMENTS (SPECIFY)	NA
GEOTECHNICAL SAMPLES	NO
DISTURBED	—
UNDISTURBED	—
TOTAL NUMBER OF CORE BOXES	—
SAMPLES FOR CHEMICAL ANALYSIS	Yes
VOC	yes
METALS	yes
OTHER (SPECIFY)	GRO/DRO
OTHER (SPECIFY)	—
OTHER (SPECIFY)	—
TOTAL CORE RECOVERY	—
DISPOSITION OF HOLE	Filled
BACKFILLED	yes
MONITORING WELL	NO
OTHER (SPECIFY)	—
SIGNATURE OF INSPECTOR	Brenda Clowers
LOCATION SKETCH/COMMENTS	
SCALE	

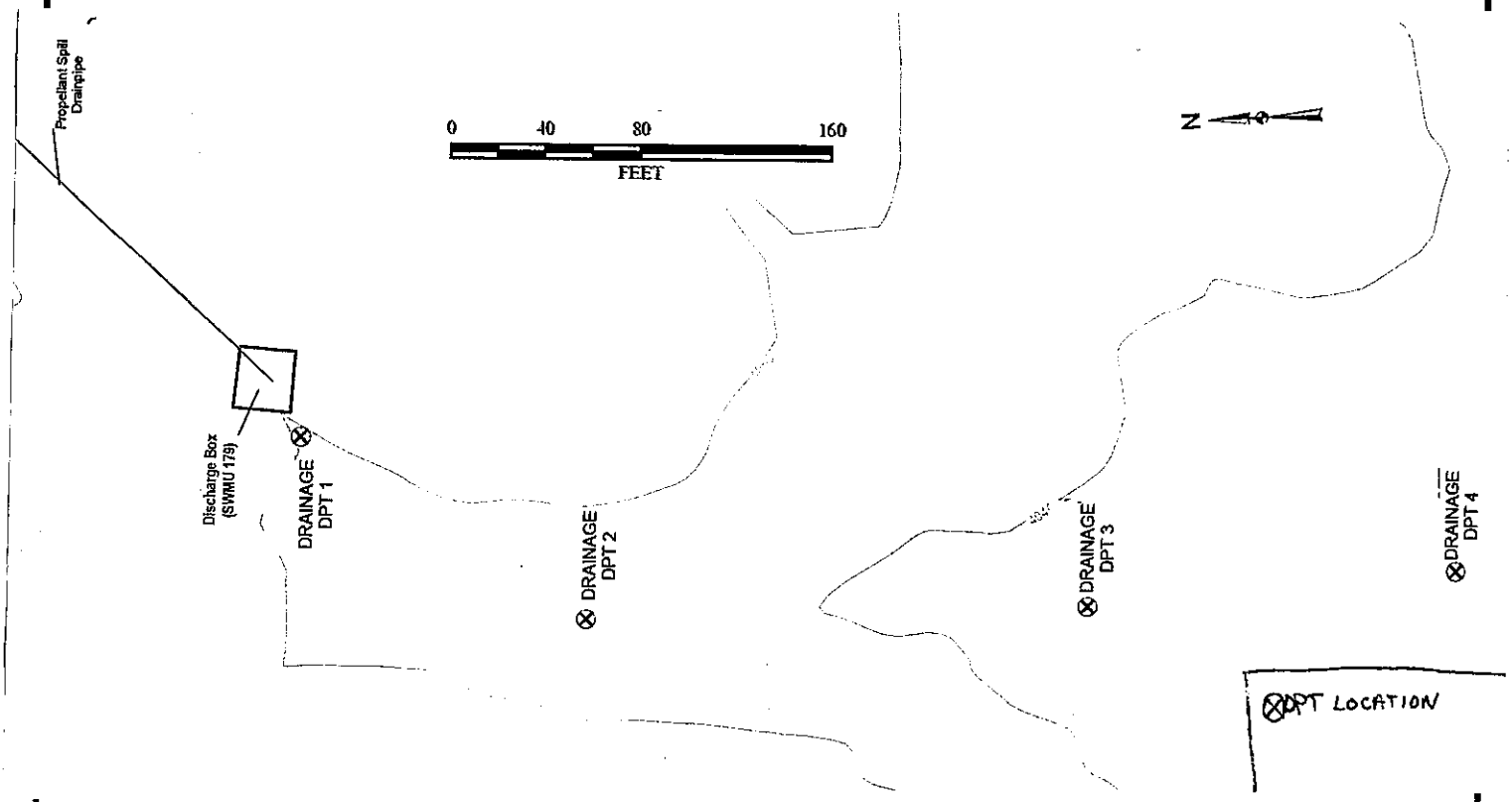

SITE NAME	SS-39
HOLE NO.	SS39-DPT-01

DRILLING LOG (CONTINUATION SHEET)

DISTRICT: AFCEE

HOLE NUMBER: SS39-DPT-01

PROJECT / PROJECT NUMBER: Holloman AFB / 100-TEW-T93002-1 Task 11.06.02

INSPECTOR: J. Bennett

SHEET 2 of SHEETS 2

ELEV (a)	DEPTH (b)	DESCRIPTION OF MATERIALS (c)	HNU SCREENING RESULTS (PPM) (d)	PUSH / SAMPLE INTERVAL (e)	ANALYTICAL SAMPLE NO (f)	USCS (g)	REMARKS (h)
		yellowish brown 10YR 5/4 med sand damp	Ø		SS39-DPT-01A DUPOS		3' 3" recovery
	1	pink 7.5YR 8/4 silty sand fine moist					small layer of white fine sand @ 2ft 10"
	2	pink 7.5YR 7/4 silty sand moist					
	3				SS39-DPT-01B		
	4						
	5	pale brown 2.5Y 7/3 silty sand damp	Ø Ø				
	6	white 2.5Y 8/1 fine sand poorly sorted dry	Ø Ø				
	7	light gray 5Y 7/2 clay moist	0.1				
	8	white 2.5Y 8/1 fine sand poorly sorted dry	0.1 0.1		SS39-DPT-1C MS MSD		
	9	light gray 5Y 7/2 clay moist	0.1				
	10	white 2.5Y 8/1 fine sand poorly sorted dry					Boring Terminated
		light gray 5Y 7/2 clay moist					

SITE NAME: SS-39

HOLE NO.: SS39-DPT-01

DRILLING LOG

CLIENT	AFCEE
HOLE NUMBER	SS39-DPT-02
DRILL SUBCONTRACTOR	Vista Geosciences
SHEET / SHEETS	1 of 2
PROJECT / PROJECT NUMBER	Holloman AFB / 100-TEN-T93002-1 Task 11.06.02
MANUFACTURER'S DESIGN OF DRILL	Geoprobe 7822
NAME OF DRILLER(S)	D. West / K. Geraghty
SITE NAME	SS-39
SIZES AND TYPES OF DRILLING AND SAMPLING EQUIPMENT	2.25" rods with innersampling liners.
HOLE LOCATION	SS39-DPT-02
SURFACE ELEVATION	
DATE STARTED	11/8/10
DATE COMPLETED	11/8/10
OVERBURDEN THICKNESS	NA
DEPTH DRILLED INTO ROCK	NA
TOTAL DEPTH OF HOLE	10.0'
DEPTH OF GROUNDWATER ENCOUNTERED	
DEPTH TO WATER AND ELAPSED TIME AFTER DRILLING COMPLETED	NA
OTHER WATER LEVEL MEASUREMENTS (SPECIFY)	NA
GEOTECHNICAL SAMPLES	NO
DISTURBED	—
UNDISTURBED	—
TOTAL NUMBER OF CORE BOXES	—
SAMPLES FOR CHEMICAL ANALYSIS	Yes
VOC	Yes
METALS	Yes
OTHER (SPECIFY)	GRO/DRO
OTHER (SPECIFY)	—
OTHER (SPECIFY)	—
TOTAL CORE RECOVERY	—
DISPOSITION OF HOLE	Filled
BACKFILLED	Yes
MONITORING WELL	NO
OTHER (SPECIFY)	—
SIGNATURE OF INSPECTOR	Brenda Clowers
LOCATION SKETCH/COMMENTS	
SCALE	

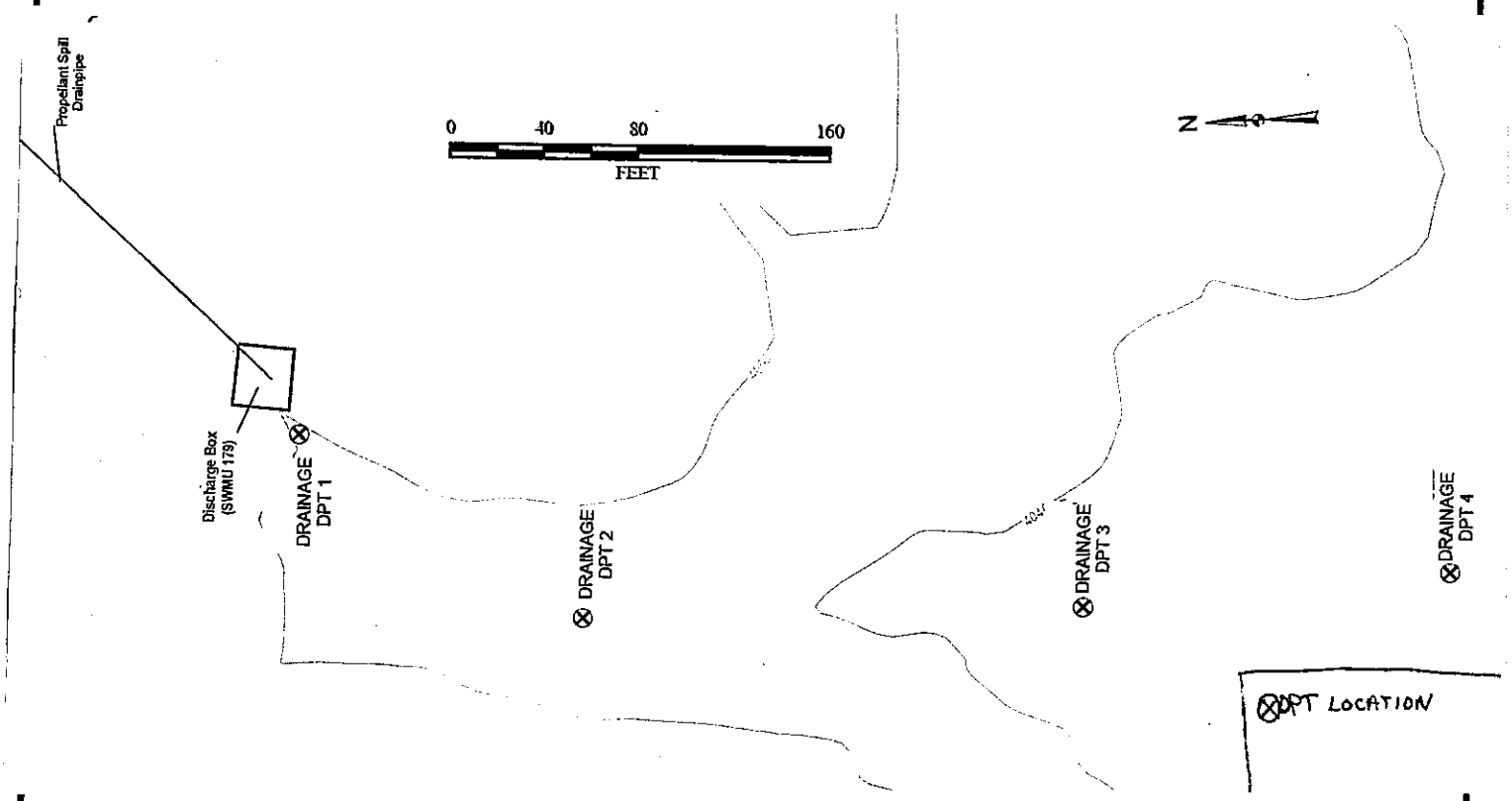

SITE NAME	SS-39
HOLE NO.	SS39-DPT-02

DRILLING LOG (CONTINUATION SHEET)

DISTRICT: AFCEE

HOLE NUMBER: SS39-DPT-02

PROJECT / PROJECT NUMBER: Holloman AFB / 100-TEN-T93002-1 Task 11.06.02

INSPECTOR: J. Bennett

SHEET 2 of 2 SHEETS

ELEV (a)	DEPTH (b)	DESCRIPTION OF MATERIALS (c)	HNU SCREENING RESULTS (PPM) (d)	PUSH / SAMPLE INTERVAL (e)	ANALYTICAL SAMPLE NO (f)	USCS (g)	REMARKS (h)
		pale brown 2.5Y 7/4 fine-med sand dry	Ø	SS39-DPT-			5' recovery
	1		Ø	02A			
		very pale brown 10YR 7/4 common fine white silty sand	Ø				
	2		0.1				
			Ø				
	3		0.1				
		reddish yellow 7.5YR 6/6 many coarse prominent light gray mott 7.5YR 7/1 moist	0.1	SS39-DPT-			
	4		0.1	02B			
			0.1				
	5		Ø				
			Ø				5' recovery
	6						
		light reddish brown 5YR 6/4 silty sand common seams white med sand moist		SS39-DPT-			
	7			02C			
	8	pinkish white 5YR 8/3 fine sand w/ some silt friable					
	9						
	10	~~Boring~~ Terminated					Boring Terminated

SITE NAME: SS-39

HOLE NO.: SS39-DPT-02

DRILLING LOG

CLIENT	AFCEE
HOLE NUMBER	SS39-DPT-03
DRILL SUBCONTRACTOR	Vista Geosciences
SHEET / SHEETS	1 of 2
PROJECT / PROJECT NUMBER	Holloman AFB / 100-TEN-T93002-1 Task 11.06.02
MANUFACTURER'S DESIGN OF DRILL	Geoprobe 7822
NAME OF DRILLER(S)	D. West / K. Geraghty
SITE NAME	SS-39
SIZES AND TYPES OF DRILLING AND SAMPLING EQUIPMENT	2.25" rods with innersampling liners.
HOLE LOCATION	SS39-DPT-03
SURFACE ELEVATION	
DATE STARTED	11/8/10
DATE COMPLETED	11/8/10
OVERBURDEN THICKNESS	NA
DEPTH DRILLED INTO ROCK	NA
TOTAL DEPTH OF HOLE	10.0'
DEPTH OF GROUNDWATER ENCOUNTERED	
DEPTH TO WATER AND ELAPSED TIME AFTER DRILLING COMPLETED	NA
OTHER WATER LEVEL MEASUREMENTS (SPECIFY)	NA
GEOTECHNICAL SAMPLES	NO
DISTURBED	—
UNDISTURBED	—
TOTAL NUMBER OF CORE BOXES	—
SAMPLES FOR CHEMICAL ANALYSIS	Yes
VOC	Yes
METALS	Yes
OTHER (SPECIFY)	GRO/DRO
OTHER (SPECIFY)	—
OTHER (SPECIFY)	—
TOTAL CORE RECOVERY	—
DISPOSITION OF HOLE	Filled
BACKFILLED	Yes
MONITORING WELL	NO
OTHER (SPECIFY)	—
SIGNATURE OF INSPECTOR	Brenda Clowers
LOCATION SKETCH/COMMENTS	
SCALE	

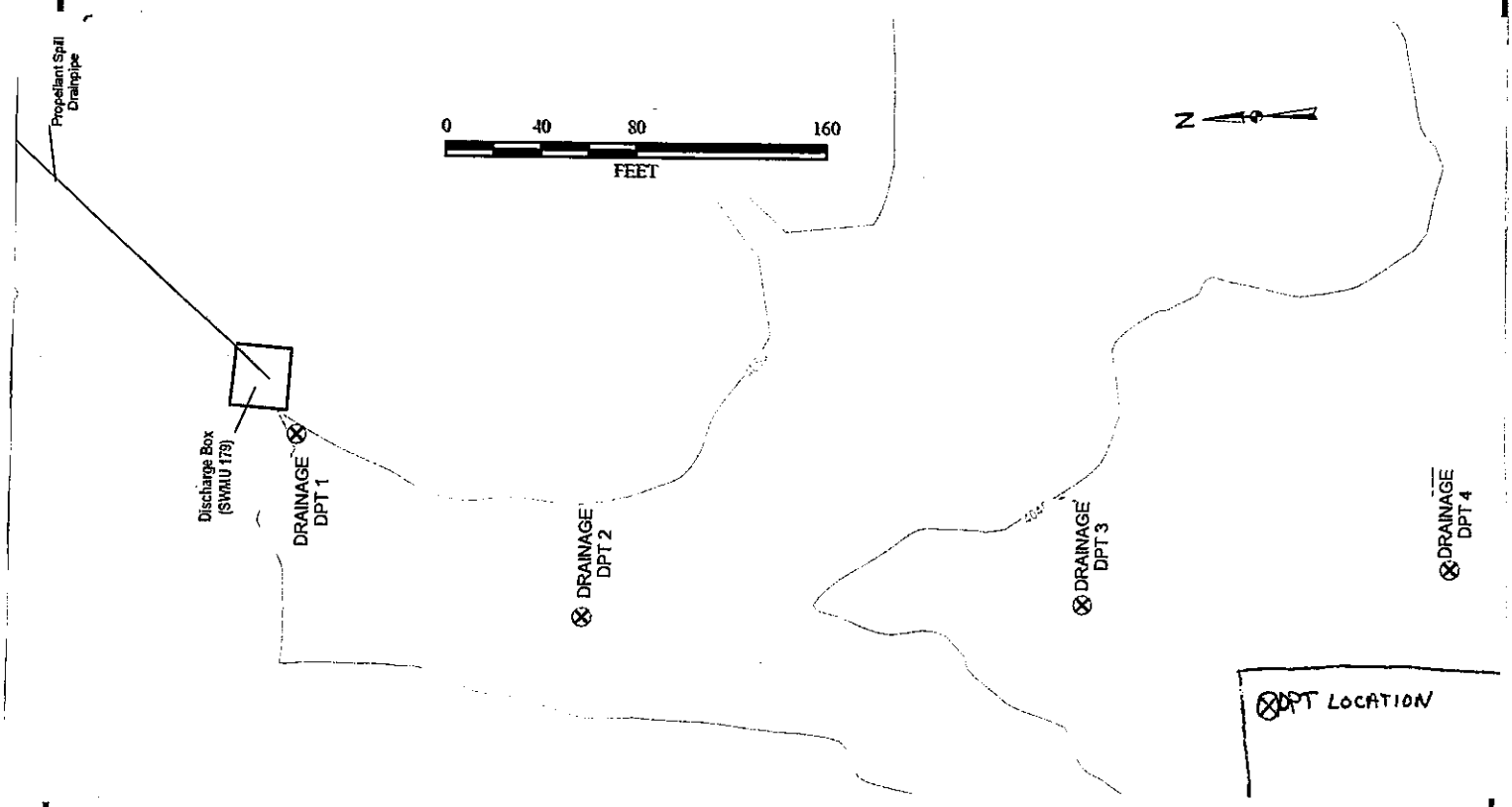

SITE NAME	SS-39
HOLE NO.	SS39-DPT-03

DRILLING LOG (CONTINUATION SHEET)

DISTRICT: AFCEE

HOLE NUMBER: SS39-DPT-03

PROJECT / PROJECT NUMBER: Holloman AFB / 100-TEN-T93002-1 Task 11.06.02

INSPECTOR: J. Bennett

SHEET 2 of SHEETS 2

ELEV (a)	DEPTH (b)	DESCRIPTION OF MATERIALS (c)	HNU SCREENING RESULTS (PPM) (d)	PUSH / SAMPLE INTERVAL (e)	ANALYTICAL SAMPLE NO (f)	USCS (g)	REMARKS (h)
		Reddish yellow 7.5YR 7/6 fine silty sand damp	Ø	0-5'			2' 7" Recovery
	1				SS39-DPT-03A		
	2						
	3						
	4	Reddish yellow 7.5YR 7/6 med silty sand moist common fine white mottles dry to damp			SS39-DPT-03B		
	5		Ø	5-10'			3' 7" recovery
	6	Reddish yellow 7.5YR 6/6 silty sand seams of pinkish white fine sand 5YR 8/2 moist					
	7				SS39-DPT-03C and DUPC4		
	8						
	9	Reddish yellow 5YR 6/6 silty sand moist					
	10	bottom of boring					Boring Terminated

SITE NAME: SS-39

HOLE NO.: SS39-DPT-03

DRILLING LOG

CLIENT	AFCEE
HOLE NUMBER	SS39-DPT-04
DRILL SUBCONTRACTOR	Vista Geosciences
SHEET / SHEETS	1 of 2
PROJECT / PROJECT NUMBER	Holloman AFB / 100-TEN-T93002-1 Task 11.06.02
MANUFACTURER'S DESIGN OF DRILL	Geoprobe 7822
NAME OF DRILLER(S)	D. West / K. Geraghty
SITE NAME	SS-39
SIZES AND TYPES OF DRILLING AND SAMPLING EQUIPMENT	2.25" rods with innersampling liners.
HOLE LOCATION	SS39-DPT-04
SURFACE ELEVATION	
DATE STARTED	11/8/10
DATE COMPLETED	11/8/10
OVERBURDEN THICKNESS	NA
DEPTH DRILLED INTO ROCK	NA
TOTAL DEPTH OF HOLE	10.0'
DEPTH OF GROUNDWATER ENCOUNTERED	7.5'
DEPTH TO WATER AND ELAPSED TIME AFTER DRILLING COMPLETED	NA
OTHER WATER LEVEL MEASUREMENTS (SPECIFY)	NA
GEOTECHNICAL SAMPLES	NO
DISTURBED	—
UNDISTURBED	—
TOTAL NUMBER OF CORE BOXES	—
SAMPLES FOR CHEMICAL ANALYSIS	Yes
VOC	yes
METALS	yes
OTHER (SPECIFY)	GRO/DRO
OTHER (SPECIFY)	—
OTHER (SPECIFY)	—
TOTAL CORE RECOVERY	—
DISPOSITION OF HOLE	Filled
BACKFILLED	yes
MONITORING WELL	NO
OTHER (SPECIFY)	—
SIGNATURE OF INSPECTOR	Barbara Clowers
LOCATION SKETCH/COMMENTS	
SCALE	

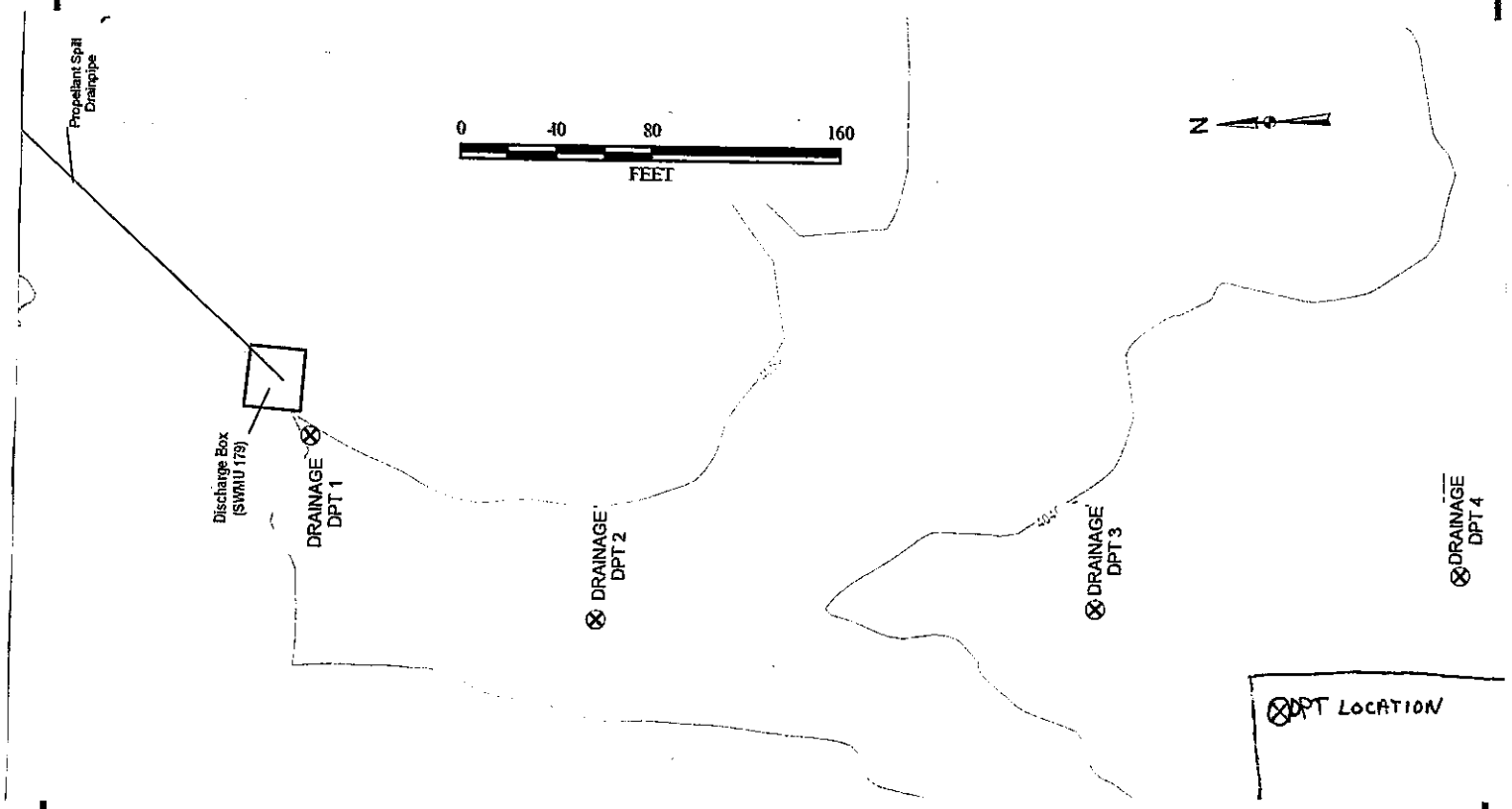

SITE NAME	SS-39
HOLE NO.	SS39-DPT-04

DRILLING LOG (CONTINUATION SHEET)

DISTRICT: AFCEE

HOLE NUMBER: SD27-DPT-04

PROJECT / PROJECT NUMBER: Holloman AFB / 100-TEN-T93002-1 Task 11.06.02

INSPECTOR: J. Bennett

SHEET 2 of SHEETS 2

ELEV (a)	DEPTH (b)	DESCRIPTION OF MATERIALS (c)	HNU SCREENING RESULTS (PPM) (d)	PUSH / SAMPLE INTERVAL (e)	ANALYTICAL SAMPLE NO (f)	USCS (g)	REMARKS (h)
		brownish yellow 10YR 6/6 fine silty sand	Ø	5-10'			5' recovery
	1	~~damp~~ moist			SD27-DPT-04A		
		very pale brown 10YR					
	2	7/3 med-fine sand moist					
		yellow 10YR 7/6					
	3	silty sand saturated					
	4				SD27-DPT-04B		
	5		Ø				
			Ø				
	6	light brown 7.5YR		5-10'			5' Recovery
		6/4 silty sand w/	0.1				
	7	clay moist	Ø		SD27-DPT-04C		
		pink 7.5YR 8/4	Ø				
	8	silty sand w/ clay					
		saturated	Ø				
	9		Ø				
			Ø				
	10						
		Boring Terminated					Boring Terminated

SITE NAME: SS-39

HOLE NO.: SS39-DPT-04

DRILLING LOG

CLIENT	AFCEE
HOLE NUMBER	SS39-DPT-05
DRILL SUBCONTRACTOR	Vista Geosciences
SHEET / SHEETS	1 of 2
PROJECT / PROJECT NUMBER	Holloman AFB / 100-TEN-T93002-1 Task 11.06.02
MANUFACTURER'S DESIGN OF DRILL	Geoprobe 7822
NAME OF DRILLER(S)	D. West / K. Geraghty
SITE NAME	SS-39
SIZES AND TYPES OF DRILLING AND SAMPLING EQUIPMENT	2.25" rods with innersampling liners.
HOLE LOCATION	SS39-DPT-05
SURFACE ELEVATION	
DATE STARTED	11/6/10
DATE COMPLETED	11/6/10
OVERBURDEN THICKNESS	NA
DEPTH DRILLED INTO ROCK	NA
TOTAL DEPTH OF HOLE	15.0'
DEPTH OF GROUNDWATER ENCOUNTERED	9.0'
DEPTH TO WATER AND ELAPSED TIME AFTER DRILLING COMPLETED	NA
OTHER WATER LEVEL MEASUREMENTS (SPECIFY)	NA
GEOTECHNICAL SAMPLES	NO
DISTURBED	—
UNDISTURBED	—
TOTAL NUMBER OF CORE BOXES	—
SAMPLES FOR CHEMICAL ANALYSIS	Yes
VOC	Yes
METALS	Yes
OTHER (SPECIFY)	GRO/DRO
OTHER (SPECIFY)	—
OTHER (SPECIFY)	—
TOTAL CORE RECOVERY	—
DISPOSITION OF HOLE	Filled
BACKFILLED	Yes
MONITORING WELL	NO
OTHER (SPECIFY)	—
SIGNATURE OF INSPECTOR	Pamela Clowes
LOCATION SKETCH/COMMENTS	
SCALE	

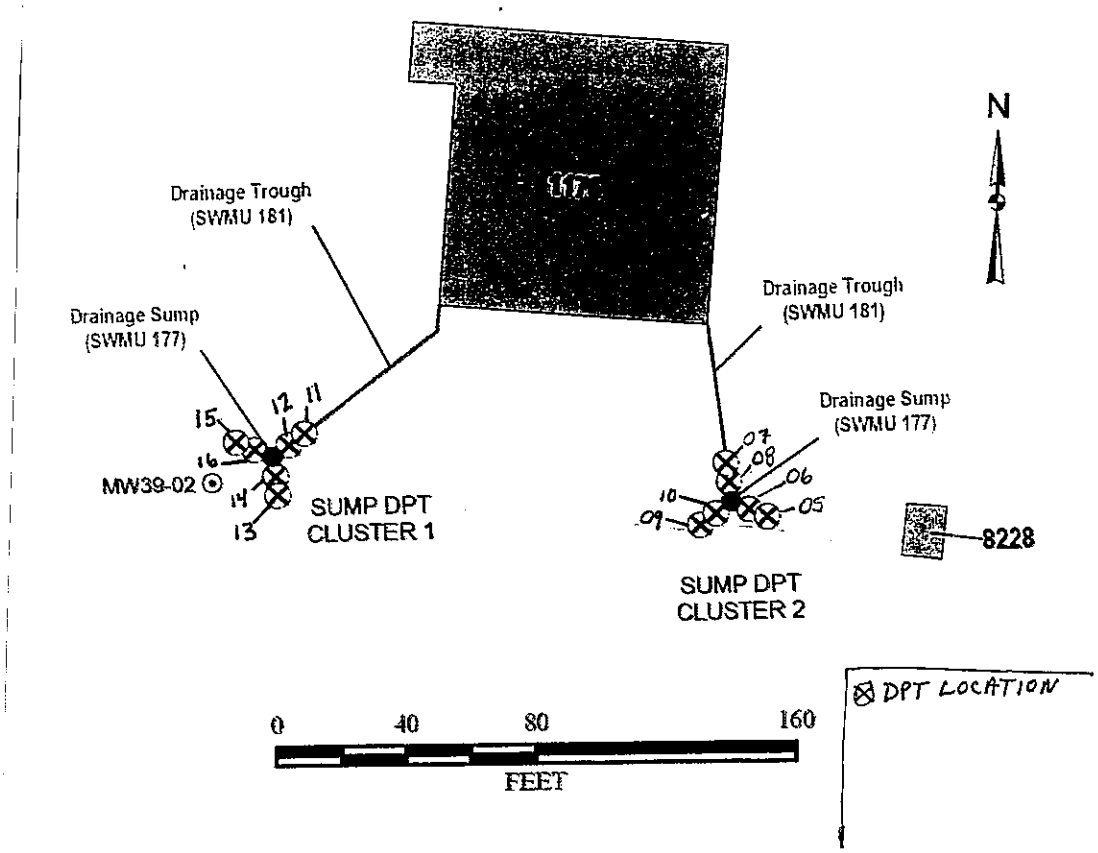

SITE NAME	SS-39
HOLE NO.	SS39-DPT-05

DRILLING LOG (CONTINUATION SHEET)

DISTRICT: AFCEE

HOLE NUMBER: SS39-DPT-05

PROJECT / PROJECT NUMBER: Holloman AFB / 100-TEW-T93002-1 Task 11.06.02

INSPECTOR: B. Clowers

SHEET 2 of 2 SHEETS

ELEV (a)	DEPTH (b)	DESCRIPTION OF MATERIALS (c)	HNU SCREENING RESULTS (PPM) (d)	PUSH / SAMPLE INTERVAL (e)	ANALYTICAL SAMPLE NO (f)	USCS (g)	REMARKS (h)
	0	Very Pale brown 10YR 7/4 silty Sand, fine grained. Dry. 18"	Ø				5' push, 48" recovery
	1		Ø				
	2	very pale brown 10YR 8/2, silty Sand, Damp. 30"					
	3	gravel (sand) at 32" from top. 2" layer, Damp.	Ø				
	4		Ø	3.0 - 5.0	SS39-DPT-05A		
	5	No Recovery					No Recovery
		Same as above, 24"					5' push, 54" recovery
	6		Ø				
	7	white, very fine, Powdery Sand with some silt. Dry 24"	Ø				
	8		Ø	7.0 - 9.0	SS39-DPT-05B		
	9		Ø				
		Light gray 2.5Y 7/2 silty sand. Moist, ~10% brown sand mottles	Ø				
	10	No Recovery					No Recovery
		Same as above. 6" 2" white, Dry sand layer.	Ø	10.0 - 12.0	SS39-DPT-05C		5' push. 48" recovery
	11	Back to light gray as above 14"	Ø				
	12	Gray silty sand with ~35% red mottling, moist. 10"	0.1 0.1				
	13	Light gray 2.5YR 7/2 silty sand Damp, firm. 10"	0.3 Ø				
		Light gray silty sand w/ red clay mixed 50/50. Damp. firm. 6"	Ø				
	14	No Recovery					No Recovery
	15	Boring Terminated					Boring Terminated

SITE NAME: SS-39

HOLE NO.: SS39-DPT-05

DRILLING LOG

CLIENT	AFCEE
HOLE NUMBER	SS39-DPT-06
DRILL SUBCONTRACTOR	Vista Geosciences
SHEET / SHEETS	1 of 2
PROJECT / PROJECT NUMBER	Holloman AFB / 100-TEN-T93002-1 Task 11.06.02
MANUFACTURER'S DESIGN OF DRILL	Geoprobe 7822
NAME OF DRILLER(S)	D. West / K. Geraghty
SITE NAME	SS-39
SIZES AND TYPES OF DRILLING AND SAMPLING EQUIPMENT	2.25" rods with innersampling liners.
HOLE LOCATION	SS39-DPT-06
SURFACE ELEVATION	
DATE STARTED	11/6/10
DATE COMPLETED	11/6/10
OVERBURDEN THICKNESS	NA
DEPTH DRILLED INTO ROCK	NA
TOTAL DEPTH OF HOLE	15.0'
DEPTH OF GROUNDWATER ENCOUNTERED	
DEPTH TO WATER AND ELAPSED TIME AFTER DRILLING COMPLETED	NA
OTHER WATER LEVEL MEASUREMENTS (SPECIFY)	NA
GEOTECHNICAL SAMPLES	NO
DISTURBED	—
UNDISTURBED	—
TOTAL NUMBER OF CORE BOXES	—
SAMPLES FOR CHEMICAL ANALYSIS	Yes
VOC	Yes
METALS	Yes
OTHER (SPECIFY)	GRO/DRO
OTHER (SPECIFY)	—
OTHER (SPECIFY)	—
TOTAL CORE RECOVERY	—
DISPOSITION OF HOLE	Filled
BACKFILLED	Yes
MONITORING WELL	NO
OTHER (SPECIFY)	—
SIGNATURE OF INSPECTOR	Pamela Clowers
LOCATION SKETCH/COMMENTS	
SCALE	

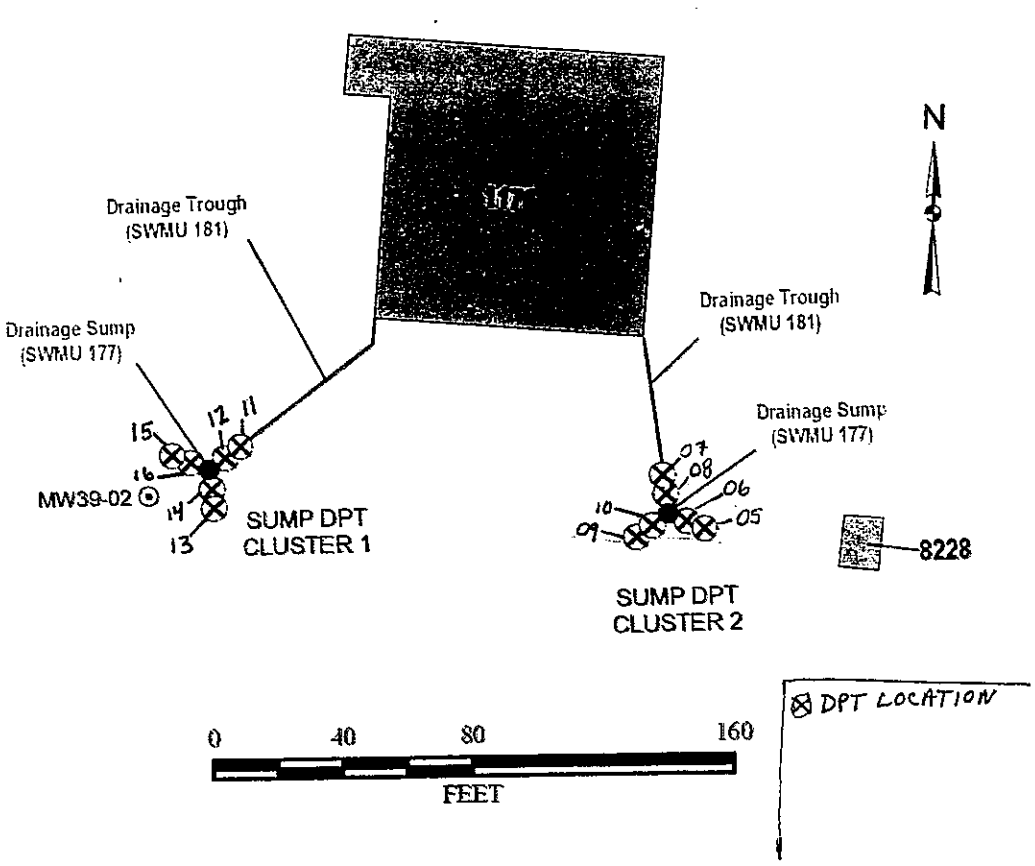

SITE NAME	SS-39
HOLE NO.	SS39-DPT-06

DRILLING LOG (CONTINUATION SHEET)

DISTRICT: AFCEE

HOLE NUMBER: SS39-DPT-06

PROJECT / PROJECT NUMBER: Holloman AFB / 100-TEN-T93002-1 Task 11.06.02

INSPECTOR: B. Clowers

SHEET 2 of 2 SHEETS

ELEV (a)	DEPTH (b)	DESCRIPTION OF MATERIALS (c)	HNU SCREENING RESULTS (PPM) (d)	PUSH / SAMPLE INTERVAL (e)	ANALYTICAL SAMPLE NO (f)	USCS (g)	REMARKS (h)
		Very pale Brown 10YR 8/3 silty Sand. Damp. Friable. 18"	∅				5' push, 40" recovery
	1		∅				
		Turns very fine grained and dry 22"					
	2		∅				
	3		∅				
				3.0-			
	4			5.0	SS39-DPT-06A		
		No recovery					No recovery
	5						
		Very pale brown 10YR 8/4 silty Sand, Damp 12"	0.5 0.2				5' push, 46" recovery
	6	3" Dry Powdery layer.	∅				
		Light yellowish brown 10YR 6/4 Clayey sand, Damp firm. 6"	∅				
	7	White powdery sand 6" Dry	∅				
		Back to Light yellowish brown Damp but friable. 22"	∅	7.0-			
	8		0.2	9.0	SS39-DPT-06B		
	9		∅				
		No recovery					No recovery
	10						
		Same as above 12"	∅				5' push, full recovery
	11	Lt brownish gray, 2.5YR 6/2 Clayey sand, moist, with ~5% red mottles. 20"	∅	10.0- 12.0	SS39-DPT-06C		
	12		0.1				
			0.1				
	13	Lt gray 2.5Y 7/2 clayey sand damp firm. 14"	∅				
			∅				
			0.1				
	14	Brown 7.5YR 5/4 sandy clay Damp, Firm 14"	∅				
		Gray fine grained sand particles within layer.	∅				
	15		0.2				
		Boring Terminated					Boring Terminated

SITE NAME: SS-39

HOLE NO.: SS39-DPT-06

DRILLING LOG

CLIENT: AFCEE		HOLE NUMBER: SS39-DPT-07	
DRILL SUBCONTRACTOR: Vista Geosciences		SHEET 1 of SHEETS 2	
PROJECT / PROJECT NUMBER: Holloman AFB / 100-TEN-T93002-1 Task 11.06.02		MANUFACTURER'S DESIGN OF DRILL: Geoprobe 7822	
NAME OF DRILLER(S): D. West / K. Geraghty		SITE NAME: SS-39	
SIZES AND TYPES OF DRILLING AND SAMPLING EQUIPMENT: 2.25" rods with innersampling liners.		HOLE LOCATION: SS39-DPT-07	
		SURFACE ELEVATION:	
		DATE STARTED: 11/6/10	DATE COMPLETED: 11/6/10
OVERBURDEN THICKNESS: NA	DEPTH DRILLED INTO ROCK: NA	TOTAL DEPTH OF HOLE: 15.0'	DEPTH OF GROUNDWATER ENCOUNTERED: 11.0'
DEPTH TO WATER AND ELAPSED TIME AFTER DRILLING COMPLETED: NA		OTHER WATER LEVEL MEASUREMENTS (SPECIFY): NA	
GEOTECHNICAL SAMPLES: NO	DISTURBED: —	UNDISTURBED: —	TOTAL NUMBER OF CORE BOXES: —

SAMPLES FOR CHEMICAL ANALYSIS	VOC	METALS	OTHER (SPECIFY)	OTHER (SPECIFY)	OTHER (SPECIFY)	TOTAL CORE RECOVERY
Yes	yes	yes	GRO/DRO	—	—	—

DISPOSITION OF HOLE	BACKFILLED	MONITORING WELL	OTHER (SPECIFY)	SIGNATURE OF INSPECTOR
Filled	yes	NO	—	Brenda Clowers

LOCATION SKETCH/COMMENTS

SCALE

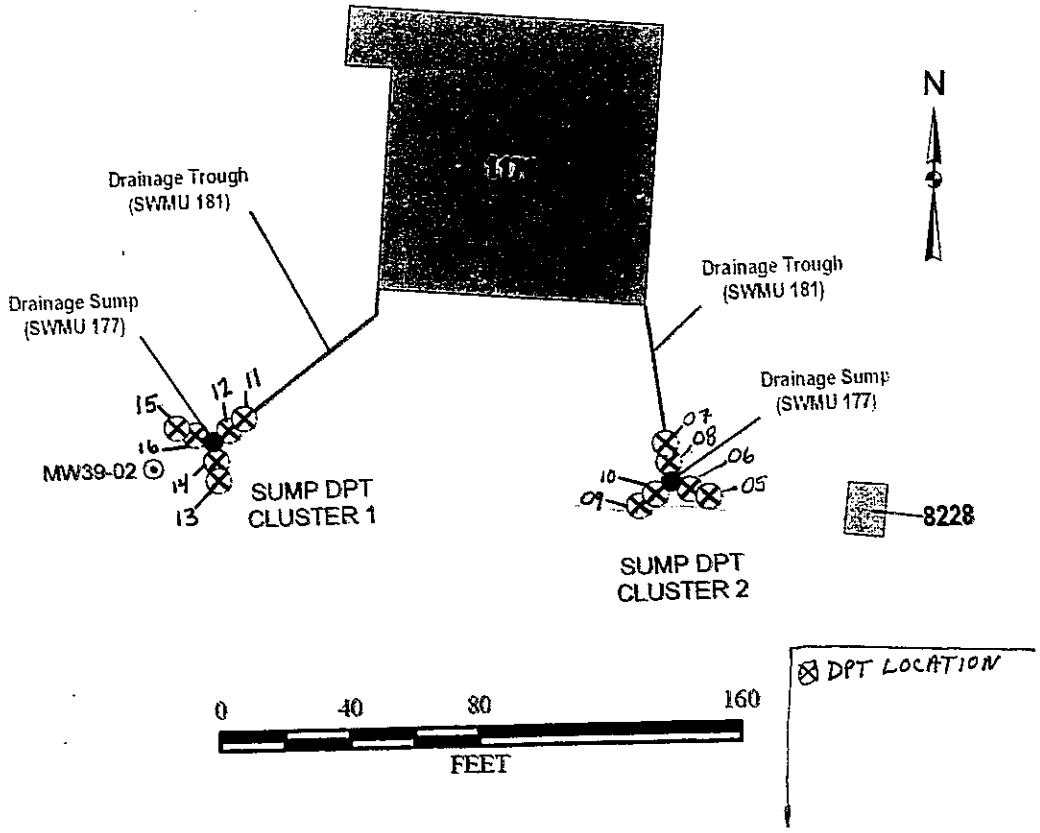

SITE NAME	HOLE NO.
SS-39	SS39-DPT-07

DRILLING LOG (CONTINUATION SHEET)

DISTRICT: AFCEE

HOLE NUMBER: SS39-DPT-07

PROJECT / PROJECT NUMBER: Holloman AFB / 100-TEN-T93002-1 Task 11.06.92

INSPECTOR: B. Clowers

SHEET 2 of 2 SHEETS

ELEV (a)	DEPTH (b)	DESCRIPTION OF MATERIALS (c)	HNU SCREENING RESULTS (PPM) (d)	PUSH / SAMPLE INTERVAL (e)	ANALYTICAL SAMPLE NO (f)	USCS (g)	REMARKS (h)
	0	Very pale brown 10YR 8/3 silty sand. Dry 42"	0				5' push, 42" recovery
	1		0				
			0				
	2		0				
			0				
	3		0	2.0 - 4.0	SS39-DPT-07A		
		Trend, highly cemented sand particles	0				
	4	No Recovery					No Recovery
	5	Same as above 28"					5' push, 48" recovery
			0				
	6		0				
			0				
	7		0				
		Fine grained white gypsum sand, Dry, 20"	0	7.0 - 9.0	SS39-DPT-07B		
	8		0				
			0				
	9		0				
		No Recovery					No Recovery
	10	Same as above. 8"					5' push, 52" recovery
			0				
	11	white 2.5Y 8/1 silty sand. Damp, firm 26"	0	10.0 - 12.0	SS39-DPT-07C		
			0				
	12		0		FD DUP01		
			0				
	13	Pale brown 2.5Y 8/2 silty sand dry. 12"	0				
			0				
	14	w/ yellowish brown 2.5Y 6/3 silty sand, fine grained, Dry Friable. 6"	0				
			0.1				
	15	No Recovery					No Recovery
		Boring Terminated					Boring Terminated

SITE NAME: SS-39

HOLE NO.: SS39-DPT-07

DRILLING LOG

CLIENT	AFCEE
HOLE NUMBER	SS39-DPT-08
DRILL SUBCONTRACTOR	Vista Geosciences
SHEET / SHEETS	1 of 2
PROJECT / PROJECT NUMBER	Holloman AFB / 100-TEN-T93002-1 Task 11.06.02
MANUFACTURER'S DESIGN OF DRILL	Geoprobe 7822
NAME OF DRILLER(S)	D. West / K. Geraghty
SITE NAME	SS-39
SIZES AND TYPES OF DRILLING AND SAMPLING EQUIPMENT	2.25" rods with innersampling liners.
HOLE LOCATION	SS39-DPT-08
SURFACE ELEVATION	
DATE STARTED	11/6/10
DATE COMPLETED	11/6/10
OVERBURDEN THICKNESS	NA
DEPTH DRILLED INTO ROCK	NA
TOTAL DEPTH OF HOLE	15.0'
DEPTH OF GROUNDWATER ENCOUNTERED	11.0'
DEPTH TO WATER AND ELAPSED TIME AFTER DRILLING COMPLETED	NA
OTHER WATER LEVEL MEASUREMENTS (SPECIFY)	NA
GEOTECHNICAL SAMPLES	NO
DISTURBED	—
UNDISTURBED	—
TOTAL NUMBER OF CORE BOXES	—
SAMPLES FOR CHEMICAL ANALYSIS	Yes
VOC	Yes
METALS	Yes
OTHER (SPECIFY)	GRO/DRO
OTHER (SPECIFY)	—
OTHER (SPECIFY)	—
TOTAL CORE RECOVERY	—
DISPOSITION OF HOLE	Filled
BACKFILLED	Yes
MONITORING WELL	NO
OTHER (SPECIFY)	—
SIGNATURE OF INSPECTOR	Brian Clowes
LOCATION SKETCH/COMMENTS	
SCALE	

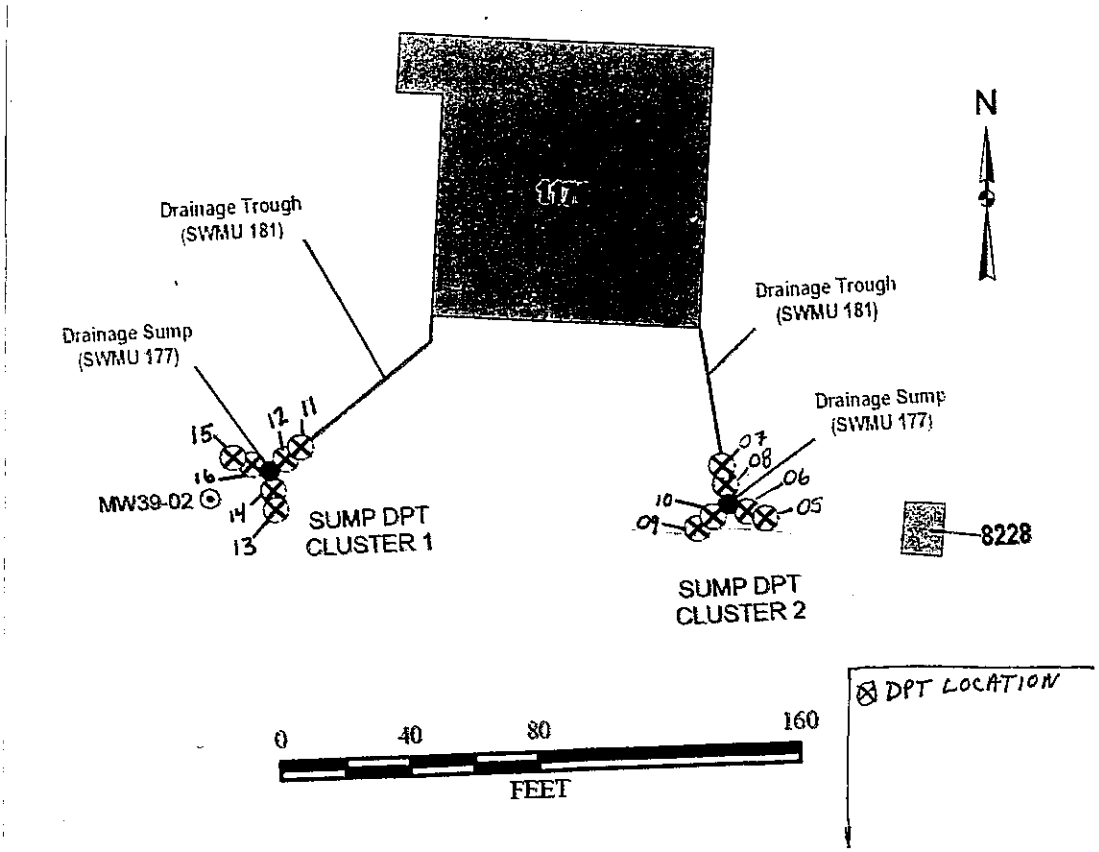

SITE NAME	SS-39
HOLE NO.	SS39-DPT-08

DRILLING LOG (CONTINUATION SHEET)

DISTRICT: AFCEE

HOLE NUMBER: SS39-DPT-08

PROJECT / PROJECT NUMBER: Holloman AFB / 100-TEN-T93002-1 Task 11.06.02

INSPECTOR: B. Clowers

SHEET 2 of 2 SHEETS

ELEV (a)	DEPTH (b)	DESCRIPTION OF MATERIALS (c)	HNU SCREENING RESULTS (PPM) (d)	PUSH / SAMPLE INTERVAL (e)	ANALYTICAL SAMPLE NO (f)	USCS (g)	REMARKS (h)
	0	Very pale brown 10YR 7/3 silty sand. Dry friable. Very fine. 46"	0				5' push, 46" recovery
	1		0				
	2		0				
	3		0	2.0 - 4.0	SS39-DPT-08A		
		Becomes Damp.	0				
	4	No Recovery					No Recovery
	5	Same as above. 20"	0				5' push, 48" recovery
	6		0				
			0				
		white fine grained sand, dry 6"					
	7		0				
	8	Light Brown 7.5YR 4/3 sandy clay, damp, firm 6"	0.1	7.0 - 9.0	SS39-DPT-08B		
			0				
		Back to white sand, damp well cemented 16"	0				
	9						
	10	Same as above 14"					5' push, 46" recovery
	11		0	10.0 - 12.0	SS39-DPT-08C		
		Light gray 10YR 7/2 silty sand, fine grained. Very damp. ~5% brown saturation staining. 32"	0				
	12		0				
	13		0				
			0				
	14	No Recovery					No Recovery
	15	Boring Terminated					Boring Terminated

SITE NAME: SS-39

HOLE NO.: SS39-DPT-08

DRILLING LOG

CLIENT	AFCEE
HOLE NUMBER	SS39-DPT-09
DRILL SUBCONTRACTOR	Vista Geosciences
SHEET / SHEETS	1 of 2
PROJECT / PROJECT NUMBER	Holloman AFB / 100-TEN-T93002-1 Task 11.06.02
MANUFACTURER'S DESIGN OF DRILL	Geoprobe 7822
NAME OF DRILLER(S)	D. West / K. Geraghty
SITE NAME	SS-39
SIZES AND TYPES OF DRILLING AND SAMPLING EQUIPMENT	2.25" rods with innersampling liners.
HOLE LOCATION	SS39-DPT-09
SURFACE ELEVATION	
DATE STARTED	11/6/10
DATE COMPLETED	11/6/10
OVERBURDEN THICKNESS	NA
DEPTH DRILLED INTO ROCK	NA
TOTAL DEPTH OF HOLE	15.0'
DEPTH OF GROUNDWATER ENCOUNTERED	6.0'
DEPTH TO WATER AND ELAPSED TIME AFTER DRILLING COMPLETED	NA
OTHER WATER LEVEL MEASUREMENTS (SPECIFY)	NA
GEOTECHNICAL SAMPLES	NO
DISTURBED	—
UNDISTURBED	—
TOTAL NUMBER OF CORE BOXES	—
SAMPLES FOR CHEMICAL ANALYSIS	Yes
VOC	yes
METALS	yes
OTHER (SPECIFY)	GRO/DRO
OTHER (SPECIFY)	—
OTHER (SPECIFY)	—
TOTAL CORE RECOVERY	—
DISPOSITION OF HOLE	Filled
BACKFILLED	yes
MONITORING WELL	NO
OTHER (SPECIFY)	—
SIGNATURE OF INSPECTOR	Pamela Clowers
LOCATION SKETCH/COMMENTS	
SCALE	

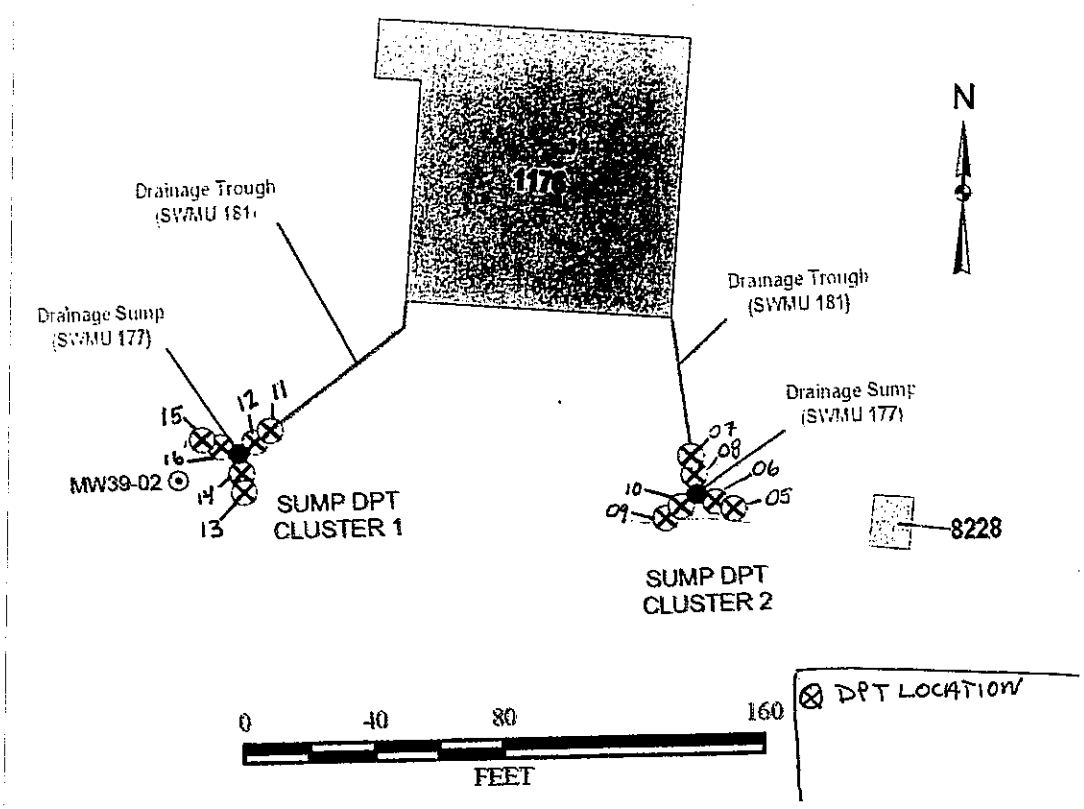

SITE NAME	SS-39
HOLE NO.	SS39-DPT-09

DRILLING LOG (CONTINUATION SHEET)

DISTRICT: AFCEE

HOLE NUMBER: SS39-DPT-09

PROJECT / PROJECT NUMBER: Holloman AFB / 100-TEN-T93002-1 Task 11.06.02

INSPECTOR: B. Clowers

SHEET 2 of 2 SHEETS

ELEV (a)	DEPTH (b)	DESCRIPTION OF MATERIALS (c)	HNU SCREENING RESULTS (PPM) (d)	PUSH / SAMPLE INTERVAL (e)	ANALYTICAL SAMPLE NO (f)	USCS (g)	REMARKS (h)
	0	Very pale Brown 10YR 8/3 Silty sand, fine grained, Dry Friable. 42"	0				5' push, 42" recovery
	1		0				
	2		0	1.75-	SS39-DPT-09A		
	3		0	3.75			
		Becomes damp	0				
	4	No Recovery					No Recovery
	5	Same as above, Becoming Very damp. 16"	0				5' push, 32" recovery
			0				
	6	6" while fine grained sand. Dry	0.2				
		6" while fine grained sand: Damp	0	5.75-	SS39-DPT-09B		
	7	Brown 7.5YR 5/4 silty Clay, damp firm. 3"	0				
		last inch back to damp white sand	0	7.75			
	8						
	9	No Recovery					No Recovery
	10	Reddish Brown 5YR 5/4 silty Clay. Damp, Dense. 5"	0	10.0-	SS39-DPT-09C		5' push, 39" recovery
	11	Light gray 2.5Y 7/1 silty sand, Damp. Friable 24"	0	12.0			
			0				
	12		0				
		Light gray clayey sand, dense, Firm, Damp 8"	0				
	13	Damp white silty sand. 2"	0				
	14	No Recovery					No Recovery
	15	Boring Terminated					Boring Terminated

SITE NAME: SS-39

HOLE NO.: SS39-DPT-09

DRILLING LOG

CLIENT	AFCEE
HOLE NUMBER	SS39-DPT-10
DRILL SUBCONTRACTOR	Vista Geosciences
SHEET / SHEETS	1 of 2
PROJECT / PROJECT NUMBER	Holloman AFB / 100-TEN-T93002-1 TASK 11.06.02
MANUFACTURER'S DESIGN OF DRILL	Geoprobe 7822
NAME OF DRILLER(S)	D. West / K. Geraghty
SITE NAME	SS-39
SIZES AND TYPES OF DRILLING AND SAMPLING EQUIPMENT	2.25" rods with innersampling liners.
HOLE LOCATION	SS39-DPT-10
SURFACE ELEVATION	
DATE STARTED	11/6/10
DATE COMPLETED	11/6/10
OVERBURDEN THICKNESS	NA
DEPTH DRILLED INTO ROCK	NA
TOTAL DEPTH OF HOLE	15.0'
DEPTH OF GROUNDWATER ENCOUNTERED	7.0'
DEPTH TO WATER AND ELAPSED TIME AFTER DRILLING COMPLETED	NA
OTHER WATER LEVEL MEASUREMENTS (SPECIFY)	NA
GEOTECHNICAL SAMPLES	NO
DISTURBED	—
UNDISTURBED	—
TOTAL NUMBER OF CORE BOXES	—
SAMPLES FOR CHEMICAL ANALYSIS	Yes
VOC	yes
METALS	yes
OTHER (SPECIFY)	GRO/DRO
OTHER (SPECIFY)	—
OTHER (SPECIFY)	—
TOTAL CORE RECOVERY	—
DISPOSITION OF HOLE	Filled
BACKFILLED	yes
MONITORING WELL	NO
OTHER (SPECIFY)	—
SIGNATURE OF INSPECTOR	Pamela Clowes
LOCATION SKETCH/COMMENTS	
SCALE	

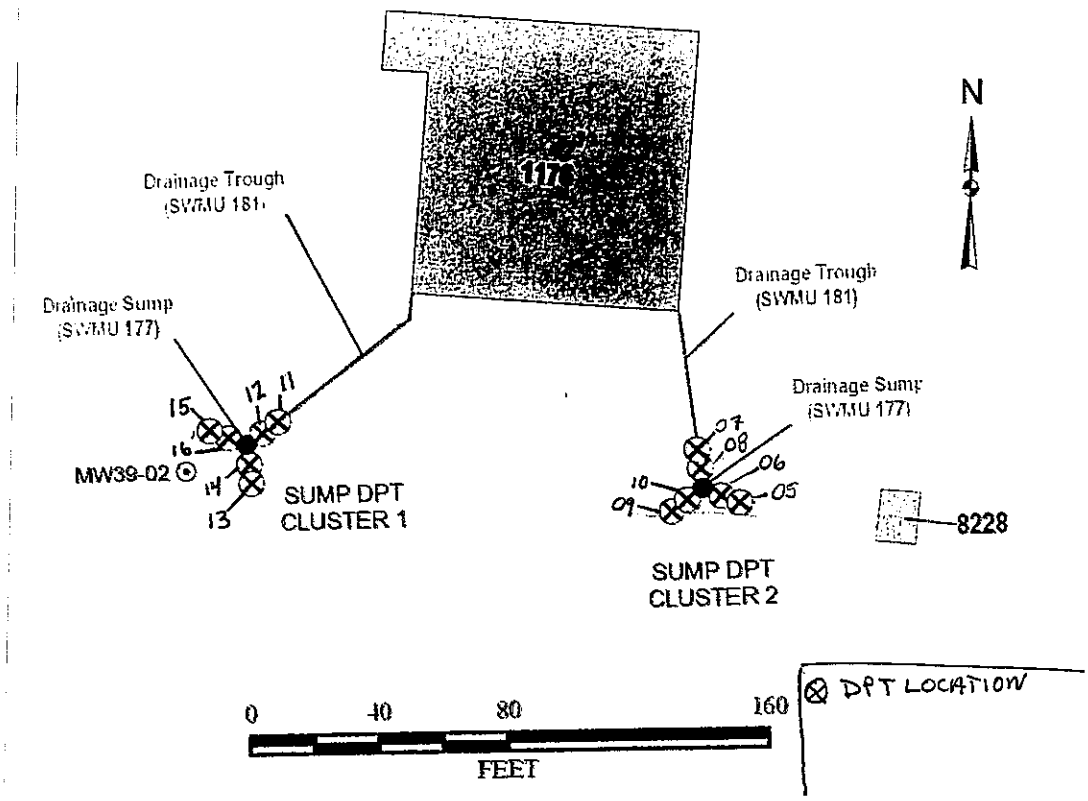

SITE NAME	SS-39
HOLE NO.	SS39-DPT-10

DRILLING LOG (CONTINUATION SHEET)

DISTRICT: AFCEE

HOLE NUMBER: SS39-DPT-10

PROJECT / PROJECT NUMBER: Holloman AFB / 100-TEN-T93002-1 Task 11.06.02

INSPECTOR: B. Clowers

SHEET 2 of 2 SHEETS

ELEV (a)	DEPTH (b)	DESCRIPTION OF MATERIALS (c)	HNU SCREENING RESULTS (PPM) (d)	PUSH / SAMPLE INTERVAL (e)	ANALYTICAL SAMPLE NO (f)	USCS (g)	REMARKS (h)
	0	Pale Brown, 2.5Y 8/3 silty sand dry, friable, 27"	0				5' Push, 40" recovery
	1		0				
			0				
	2		0	1.25-			
		white silty sand, fine grained, Dry, Powdery 7"	0	3.25	SS39-DPT-10A		
	3	very pale brown 10YR 8/3, silty sand, Damp 6"	0				
	4	No Recovery					No Recovery
	5	Same as above 6"	0				5' Push, 44" recovery
	6	white fine grained powdery sand, Dry. 14"	0	5.50-			
			0	7.50	SS39-DPT-10B		
	7	Light gray 10YR 7/2 silty sand brown, white mottling. Damp Dense, 10"	0				
	8	Reddish brown silty clay 5YR 5/4 Damp, firm, Dense 8"	0				
		Light gray 2.5Y 7/2 silty sand Damp, Dense 6"	0				
	9	No Recovery					No Recovery
	10	Same as above 27"	0	10.0-			5' push, 45" recovery
	11		0	12.0	SS39-DPT-10C		
			0		FD DUP02		
	12	Gray 2.5Y 4/1 sandy clay matrix with brown silty clay intermixed, Damp, Dense. Brown ~ 5%. 14"	0				
	13		0				
		Light gray to white silty sand, Firm, Dense, Dry friable 4"	0				
	14	No Recovery					No Recovery
	15	Boring Terminated					Boring Terminated

SITE NAME: SS-39

HOLE NO.: SS39-DPT-10

DRILLING LOG

CLIENT	AFCEE
HOLE NUMBER	SS39-DPT-11
DRILL SUBCONTRACTOR	Vista Geosciences
SHEET / SHEETS	1 of 2
PROJECT / PROJECT NUMBER	Holloman AFB / 100-TEN-T93002-1 Task 11.06.02
MANUFACTURER'S DESIGN OF DRILL	Geoprobe 7822
NAME OF DRILLER(S)	D. West / K. Geraghty
SITE NAME	SS-39
SIZES AND TYPES OF DRILLING AND SAMPLING EQUIPMENT	2.25" rods with innersampling liners.
HOLE LOCATION	SS39-DPT-11
SURFACE ELEVATION	
DATE STARTED	11/7/10
DATE COMPLETED	11/7/10
OVERBURDEN THICKNESS	NA
DEPTH DRILLED INTO ROCK	NA
TOTAL DEPTH OF HOLE	15.0'
DEPTH OF GROUNDWATER ENCOUNTERED	6.0'
DEPTH TO WATER AND ELAPSED TIME AFTER DRILLING COMPLETED	NA
OTHER WATER LEVEL MEASUREMENTS (SPECIFY)	NA
GEOTECHNICAL SAMPLES	NO
DISTURBED	—
UNDISTURBED	—
TOTAL NUMBER OF CORE BOXES	—
SAMPLES FOR CHEMICAL ANALYSIS	Yes
VOC	yes
METALS	yes
OTHER (SPECIFY)	GRO/DRO
OTHER (SPECIFY)	—
OTHER (SPECIFY)	—
TOTAL CORE RECOVERY	—
DISPOSITION OF HOLE	Filled
BACKFILLED	yes
MONITORING WELL	NO
OTHER (SPECIFY)	—
SIGNATURE OF INSPECTOR	Brenda Clowers
LOCATION SKETCH/COMMENTS	
SCALE	

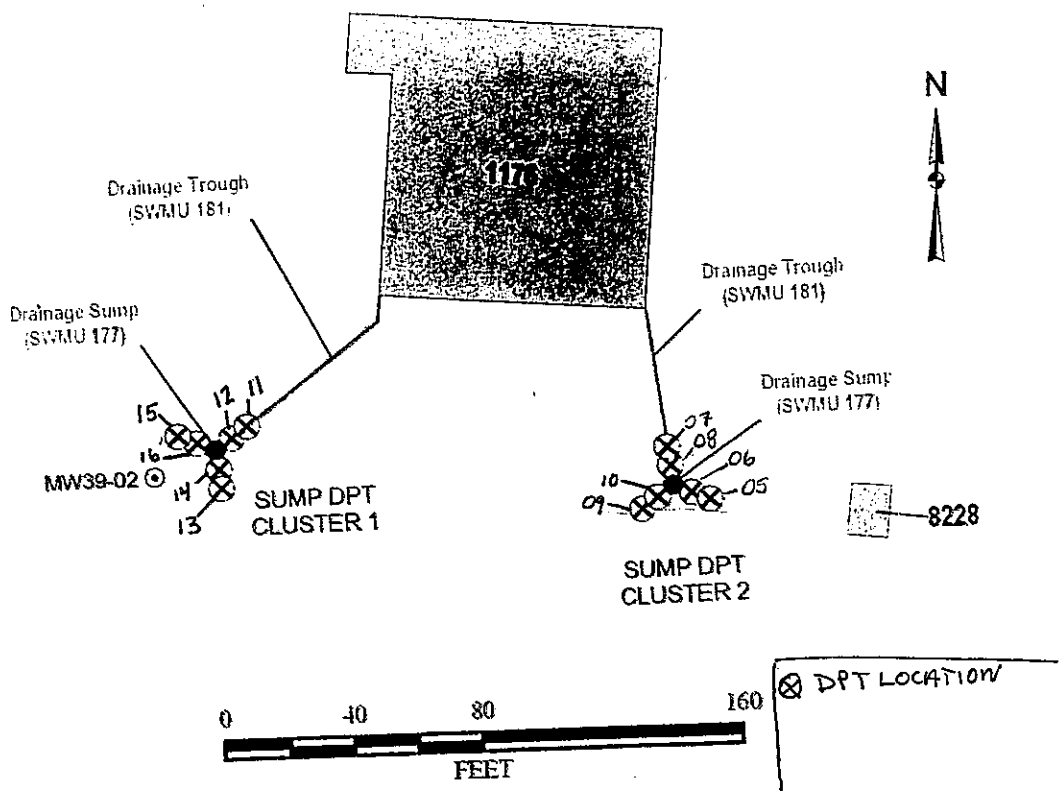

SITE NAME	SS-39
HOLE NO.	SS39-DPT-11

DRILLING LOG (CONTINUATION SHEET)

DISTRICT: AFCEE

HOLE NUMBER: SS39-DPT-11

PROJECT / PROJECT NUMBER: Holloman AFB / 100-TEN-T93002-1 Task 11.06.02

INSPECTOR: B. Clowers

SHEET 2 of 2 SHEETS

ELEV (a)	DEPTH (b)	DESCRIPTION OF MATERIALS (c)	HNU SCREENING RESULTS (PPM) (d)	PUSH / SAMPLE INTERVAL (e)	ANALYTICAL SAMPLE NO (f)	USCS (g)	REMARKS (h)
	0	Very pale brown, 10YR 8/3, very fine silty sand, Damp. Powdery in places. 44"	Ø				5' push, 44" recovery
	1		Ø				
	2		Ø				
	3		Ø	1.75-3.75	SS39-DPT-11A		
			Ø				
	4	No Recovery					No Recovery
	5	Same as above, more form and damp. 12"	Ø				5' push, 34" recovery
	6	Light yellowish brown 10YR 6/4 sandy silt, damp, dense, 9"	Ø				
	7		Ø	5.75-7.75	SS39-DPT-11B		
		white, highly friable, powdery sand, dry, dense. 13"	Ø				
	8						
	9	No recovery					No Recovery
	10	Same as above. 2" brown 7.5YR 5/4 clayey sand, Damp, Dense, with ~5% white sand mottles. 16"	Ø	10.0-12.0	SS39-DPT-11C		5' push, 54" recovery
	11		Ø				
	12	Light gray 2.5Y 7/2 silty sand, damp. firm. 8"	Ø				
	13		Ø				
	14	Light brown 7.5YR 6/4 silty sand, Damp firm with tan and white mottles ~10%. 30"	Ø				
		No Recovery					No Recovery
	15	Boring Terminated					Boring Terminated.

SITE NAME: SS-39

HOLE NO.: SS39-DPT-11

DRILLING LOG

CLIENT	AFCEE
HOLE NUMBER	SS39-DPT-12
DRILL SUBCONTRACTOR	Vista Geosciences
SHEET / SHEETS	1 of 2
PROJECT / PROJECT NUMBER	Holloman AFB / 100-TEN-T93002-1 Task 11.06.02
MANUFACTURER'S DESIGN OF DRILL	Geoprobe 7822
NAME OF DRILLER(S)	D. West / K. Geraghty
SITE NAME	SS-39
SIZES AND TYPES OF DRILLING AND SAMPLING EQUIPMENT	2.25" rods with innersampling liners.
HOLE LOCATION	SS39-DPT-12
SURFACE ELEVATION	
DATE STARTED	11/7/10
DATE COMPLETED	11/7/10
OVERBURDEN THICKNESS	NA
DEPTH DRILLED INTO ROCK	NA
TOTAL DEPTH OF HOLE	15.0'
DEPTH OF GROUNDWATER ENCOUNTERED	
DEPTH TO WATER AND ELAPSED TIME AFTER DRILLING COMPLETED	NA
OTHER WATER LEVEL MEASUREMENTS (SPECIFY)	NA
GEOTECHNICAL SAMPLES	NO
DISTURBED	—
UNDISTURBED	—
TOTAL NUMBER OF CORE BOXES	—
SAMPLES FOR CHEMICAL ANALYSIS	Yes
VOC	yes
METALS	yes
OTHER (SPECIFY)	GRO/DRO
OTHER (SPECIFY)	—
OTHER (SPECIFY)	—
TOTAL CORE RECOVERY	—
DISPOSITION OF HOLE	Filled
BACKFILLED	yes
MONITORING WELL	NO
OTHER (SPECIFY)	—
SIGNATURE OF INSPECTOR	Brenda Clowers
LOCATION SKETCH/COMMENTS	
SCALE	

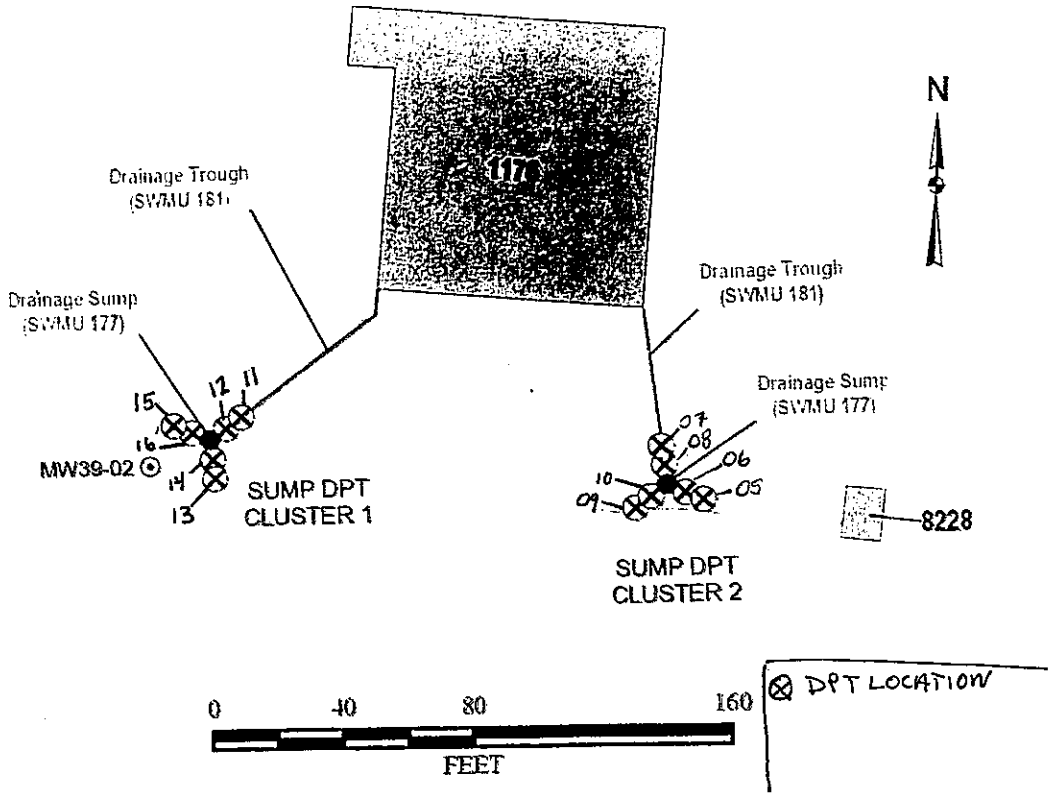

SITE NAME	SS-39
HOLE NO.	SS39-DPT-12

DRILLING LOG (CONTINUATION SHEET)

DISTRICT: AFCEE

HOLE NUMBER: SS39-DPT-12

PROJECT / PROJECT NUMBER: Holloman AFB / 100-TEN-T93002-1 Task 11.06.02

INSPECTOR: B. Clowers

SHEET 2 of 2 SHEETS

ELEV (a)	DEPTH (b)	DESCRIPTION OF MATERIALS (c)	HNU SCREENING RESULTS (PPM) (d)	PUSH / SAMPLE INTERVAL (e)	ANALYTICAL SAMPLE NO (f)	USCS (g)	REMARKS (h)
	0	Pinkish white 7.5YR 8/2 very fine silty sand, dry, powdery 24"	Ø				5' push, 48" recovery
	1		Ø				
	2	very pale brown 10YR 7/3 very fine silty sand, damp. 24"	Ø				
	3		Ø	2.0 - 4.0	SS39-DPT-12A		
	4		Ø				
		No Recovery					No Recovery
	5	same as above, 10"	Ø				5' push, 37" recovery
	6	mixture of pale brown and white sand, damp, friable, 10"	Ø	5.75 -			
	7	white gypsum sand, slightly damp, friable, 12"	Ø	7.75	SS39-DPT-12B		
	8						
	9	No Recovery					No Recovery
	10	very pale brown 10YR 8/2 silty sand, damp. firm 16"	Ø	10.0 -			5' push, full recovery.
	11			12.0	SS39-DPT-12C		
	12	Mixture of pale brown, light brown and white gypsum crystals 30"	Ø				
	13	Increasing clay content and denseness.	Ø				
	14	Brown 7.5YR 5/4 silty sand, damp. Dense but friable when squeezed < 5% gypsum traces. 14"	Ø				
	15		Ø				
		Boring Terminated					Boring Terminated

SITE NAME: SS-39

HOLE NO.: SS39-DPT-12

DRILLING LOG

CLIENT	AFCEE
HOLE NUMBER	SS39-DPT-13
DRILL SUBCONTRACTOR	Vista Geosciences
SHEET / SHEETS	1 of 2
PROJECT / PROJECT NUMBER	Holloman AFB / 100-TEN-T93002-1 Task 11.06.02
MANUFACTURER'S DESIGN OF DRILL	Geoprobe 7822
NAME OF DRILLER(S)	D. West / K. Geraghty
SITE NAME	SS-39
SIZES AND TYPES OF DRILLING AND SAMPLING EQUIPMENT	2.25" rods with innersampling liners.
HOLE LOCATION	SS39-DPT-13
SURFACE ELEVATION	
DATE STARTED	11/7/10
DATE COMPLETED	11/7/10
OVERBURDEN THICKNESS	NA
DEPTH DRILLED INTO ROCK	NA
TOTAL DEPTH OF HOLE	15.0
DEPTH OF GROUNDWATER ENCOUNTERED	10.0'
DEPTH TO WATER AND ELAPSED TIME AFTER DRILLING COMPLETED	NA
OTHER WATER LEVEL MEASUREMENTS (SPECIFY)	NA
GEOTECHNICAL SAMPLES	NO
DISTURBED	—
UNDISTURBED	—
TOTAL NUMBER OF CORE BOXES	—
SAMPLES FOR CHEMICAL ANALYSIS	Yes
VOC	Yes
METALS	Yes
OTHER (SPECIFY)	GRO/DRO
OTHER (SPECIFY)	—
OTHER (SPECIFY)	—
TOTAL CORE RECOVERY	—
DISPOSITION OF HOLE	Filled
BACKFILLED	Yes
MONITORING WELL	NO
OTHER (SPECIFY)	—
SIGNATURE OF INSPECTOR	Barbara Clowes
LOCATION SKETCH/COMMENTS	
SCALE	

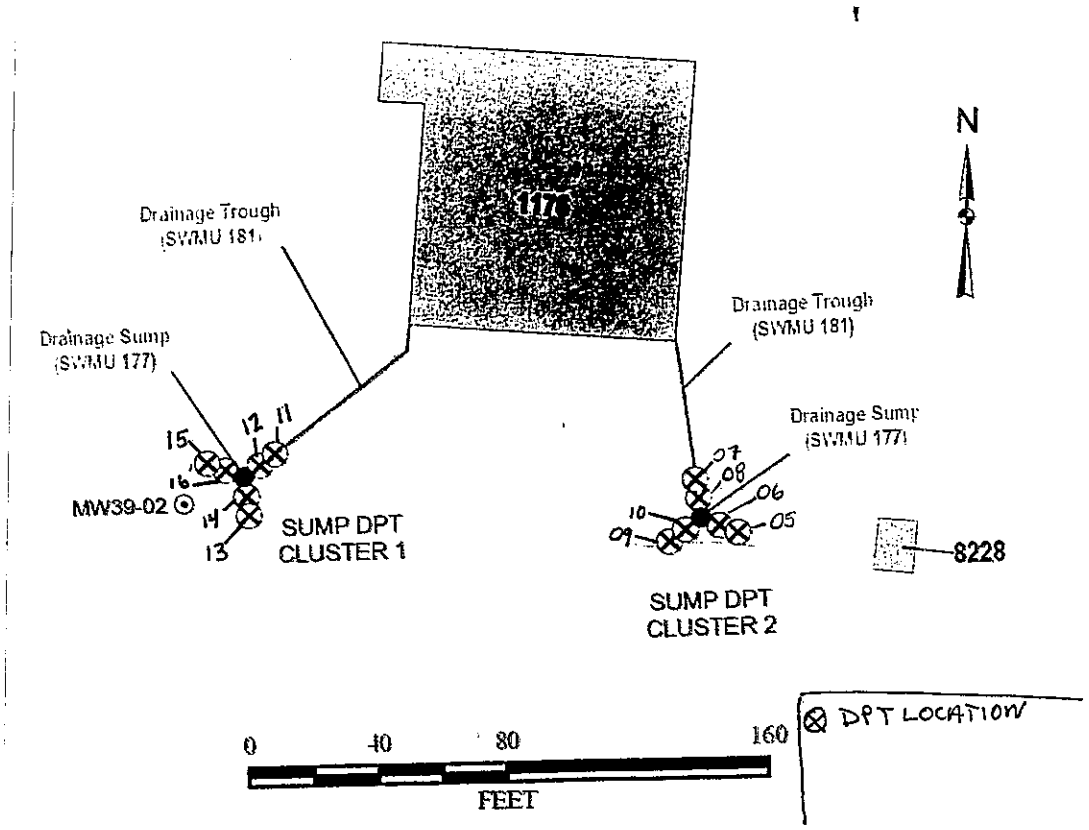

SITE NAME	SS-39
HOLE NO.	SS39-DPT-13

DRILLING LOG (CONTINUATION SHEET)

DISTRICT: AFCEE

HOLE NUMBER: SS39-DPT-13

PROJECT / PROJECT NUMBER: Holloman AFB / 100-TEN-T93002-1 TASK 11.06.02

INSPECTOR: B. Clowers

SHEET 2 of 2 SHEETS

ELEV (a)	DEPTH (b)	DESCRIPTION OF MATERIALS (c)	HNU SCREENING RESULTS (PPM) (d)	PUSH / SAMPLE INTERVAL (e)	ANALYTICAL SAMPLE NO (f)	USCS (g)	REMARKS (h)
	0	Very pale brown 10YR 8/2, very fine silty sand, dry, powdery 24"	Ø				5' push, 46" recovery
	1		Ø				
	2	Pink 7.5YR 7/3 silty sand, Damp, friable when squeezed 22"	Ø				
	3		Ø	2.0 - 4.0	SS39-DPT-13A		
	4		Ø				
		No Recovery					No Recovery
	5	same as above 6"	Ø				5' push, 48" recovery
	6	very pale brown 10YR 8/3 very fine sandy silt, slighty damp, powdery 6"	Ø				
	7	very pale brown to white powdery sandy silt, slighty damp. 36"	Ø				
	8		Ø	7.0 - 9.0	SS39-DPT-13B		
	9		Ø				
		No Recovery					No Recovery
	10	Light gray 10YR 7/2 silty sand with some clay. dense, damp. 24"	Ø				5' push, 57" recovery
	11		Ø	10.0 - 12.0	SS39-DPT-13C		
	12	Light brownish gray 10YR 6/2 silty sand, dense, damp white sand crystals and iron staining mixed in. 10"	Ø				
	13	Light gray 10YR 7/2 silty sand slighty damp, friable. 22"	Ø				
	14		Ø				
	15		Ø				
		Boring Terminated					Boring Terminated.

SITE NAME: SS-39

HOLE NO.: SS39-DPT-13

DRILLING LOG

CLIENT	AFCEE
HOLE NUMBER	SS39-DPT-14
DRILL SUBCONTRACTOR	Vista Geosciences
SHEET / SHEETS	1 of 2
PROJECT / PROJECT NUMBER	Holloman AFB / 100-TEN-T93002-1 Task 11.06.02
MANUFACTURER'S DESIGN OF DRILL	Geoprobe 7822
NAME OF DRILLER(S)	D. West / K. Geraghty
SITE NAME	SS-39
SIZES AND TYPES OF DRILLING AND SAMPLING EQUIPMENT	2.25" rods with innersampling liners.
HOLE LOCATION	SS39-DPT-14
SURFACE ELEVATION	
DATE STARTED	11/7/10
DATE COMPLETED	11/7/10
OVERBURDEN THICKNESS	NA
DEPTH DRILLED INTO ROCK	NA
TOTAL DEPTH OF HOLE	15.0'
DEPTH OF GROUNDWATER ENCOUNTERED	10.0'
DEPTH TO WATER AND ELAPSED TIME AFTER DRILLING COMPLETED	NA
OTHER WATER LEVEL MEASUREMENTS (SPECIFY)	NA
GEOTECHNICAL SAMPLES	NO
DISTURBED	—
UNDISTURBED	—
TOTAL NUMBER OF CORE BOXES	—
SAMPLES FOR CHEMICAL ANALYSIS	Yes
VOC	yes
METALS	yes
OTHER (SPECIFY)	GRO/DRO
OTHER (SPECIFY)	—
OTHER (SPECIFY)	—
TOTAL CORE RECOVERY	—
DISPOSITION OF HOLE	Filled
BACKFILLED	yes
MONITORING WELL	NO
OTHER (SPECIFY)	—
SIGNATURE OF INSPECTOR	Pamela Clowes
LOCATION SKETCH/COMMENTS	
SCALE	

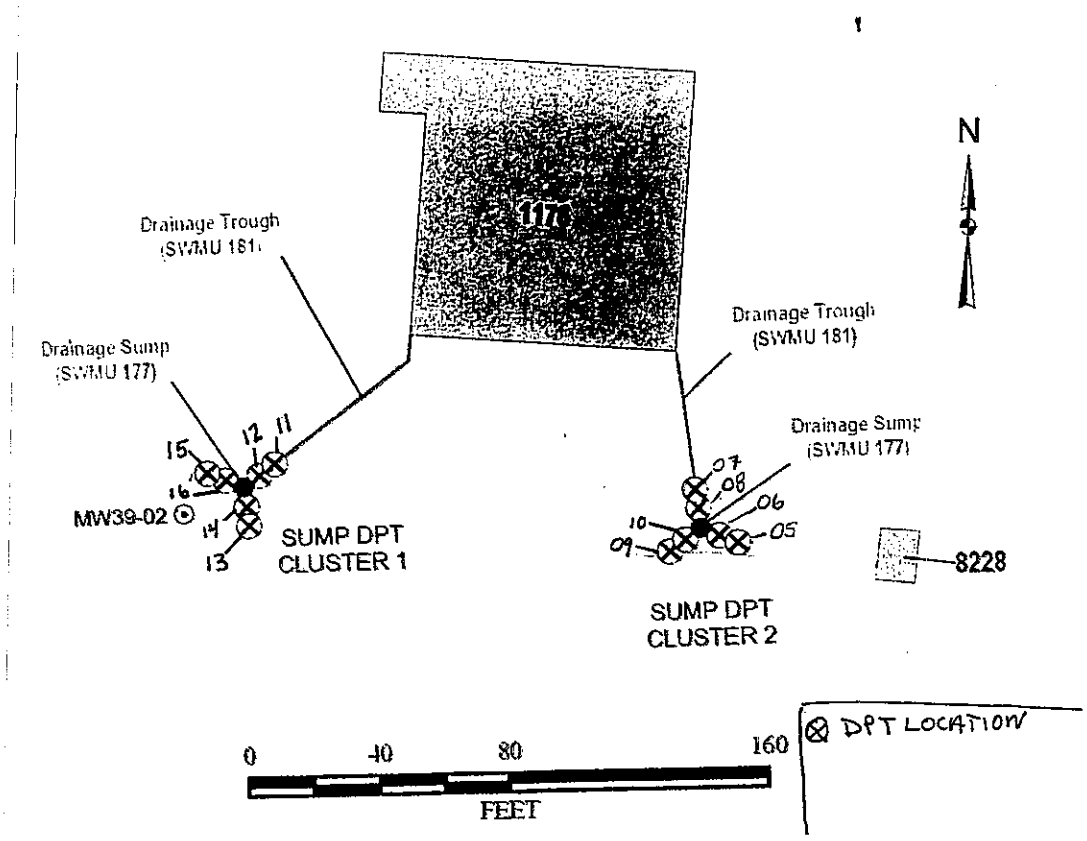

SITE NAME	SS-39
HOLE NO.	SS39-DPT-14

DRILLING LOG (CONTINUATION SHEET)

DISTRICT: AFCEE

HOLE NUMBER: SS39-DPT-14

PROJECT / PROJECT NUMBER: Holloman AFB / 100-TEN-T93002-1 Task 11.06.02

INSPECTOR: B. Clowers

SHEET 2 of 2 SHEETS

ELEV (a)	DEPTH (b)	DESCRIPTION OF MATERIALS (c)	HNU SCREENING RESULTS (PPM) (d)	PUSH / SAMPLE INTERVAL (e)	ANALYTICAL SAMPLE NO (f)	USCS (g)	REMARKS (h)
	0	Very pale brown, 10YR 8/3 silty sand, slightly damp, powdery. 48"	Ø				5' push, 48" recovery
	1		Ø				
	2		Ø				
	3		Ø	2.0- 4.0	SS39-DPT-14A		
			Ø		FD DUP03		
	4		Ø				
		No Recovery					No Recovery
	5	Very pale brown 10YR 7/4 silty sand, slightly damp. 12"	Ø				5' push, 38" recovery
	6	Pale brown 2.5Y 8/2 silty sand, very fine, powdery, dry 26"	Ø	5.50- 7.50	SS39-DPT-14B		
	7		Ø				
	8		Ø				
	9	No Recovery.					No Recovery
	10	Pale brown silty sand, damp firm 18"	Ø				5' push, full recovery
	11		Ø	10.0- 12.0	SS39-DPT-14C		
		Light gray 2.5Y 7/2 silty sand, firm, Damp. 6"	Ø				
	12	yellowish ~~brown~~ Red 5YR 5/6 clayey sand, firm dense. 6"	Ø				
		2" thick gray layer.					
	13	Back to yellowish red with ~20% tan and white mottles 30" firm, dense	Ø				
	14		Ø				
			Ø				
	15		Ø				
		Boring terminated.					Boring Terminated

SITE NAME: SS-39

HOLE NO.: SS39-DPT-14

DRILLING LOG

CLIENT	AFCEE
HOLE NUMBER	SS39-DPT-15
DRILL SUBCONTRACTOR	Vista Geosciences
SHEET / SHEETS	1 of 2
PROJECT / PROJECT NUMBER	Holloman AFB / 100-TEN-T93002-1 Task 11.06.02
MANUFACTURER'S DESIGN OF DRILL	Geoprobe 7822
NAME OF DRILLER(S)	D. West / K. Geraghty
SITE NAME	SS-39
SIZES AND TYPES OF DRILLING AND SAMPLING EQUIPMENT	2.25" rods with innersampling liners.
HOLE LOCATION	SS39-DPT-15
SURFACE ELEVATION	
DATE STARTED	11/8/10
DATE COMPLETED	11/8/10
OVERBURDEN THICKNESS	NA
DEPTH DRILLED INTO ROCK	NA
TOTAL DEPTH OF HOLE	15.0'
DEPTH OF GROUNDWATER ENCOUNTERED	10.0'
DEPTH TO WATER AND ELAPSED TIME AFTER DRILLING COMPLETED	NA
OTHER WATER LEVEL MEASUREMENTS (SPECIFY)	NA
GEOTECHNICAL SAMPLES	NO
DISTURBED	—
UNDISTURBED	—
TOTAL NUMBER OF CORE BOXES	—
SAMPLES FOR CHEMICAL ANALYSIS	Yes
VOC	yes
METALS	yes
OTHER (SPECIFY)	GRO/DRO
OTHER (SPECIFY)	—
OTHER (SPECIFY)	—
TOTAL CORE RECOVERY	—
DISPOSITION OF HOLE	Filled
BACKFILLED	yes
MONITORING WELL	NO
OTHER (SPECIFY)	—
SIGNATURE OF INSPECTOR	Brenda Clowers
LOCATION SKETCH/COMMENTS	
SCALE	

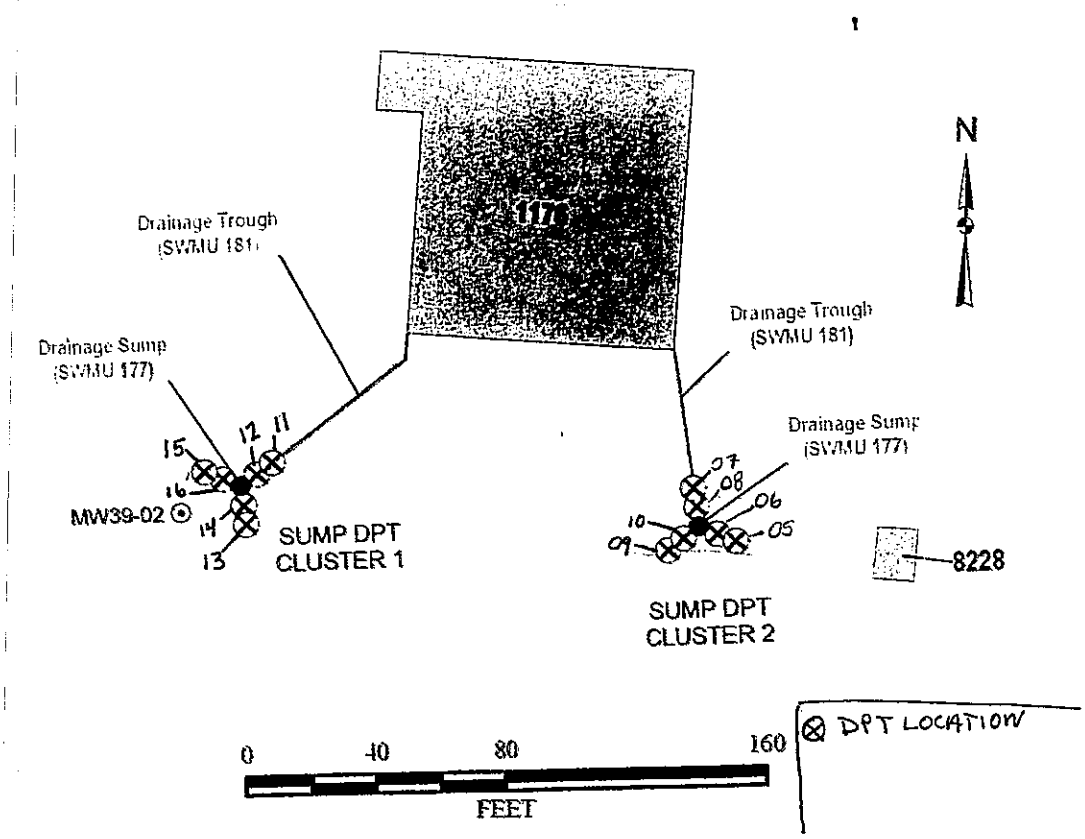

SITE NAME	SS-39
HOLE NO.	SS39-DPT-15

DRILLING LOG (CONTINUATION SHEET)

DISTRICT: AFCEE

HOLE NUMBER: SS39-DPT-15

PROJECT / PROJECT NUMBER: Holloman AFB / 1100-TEN-T93002-1 Task 11.06.02

INSPECTOR: B. Clowers

SHEET 2 of 2 SHEETS

ELEV (a)	DEPTH (b)	DESCRIPTION OF MATERIALS (c)	HNU SCREENING RESULTS (PPM) (d)	PUSH / SAMPLE INTERVAL (e)	ANALYTICAL SAMPLE NO (f)	USCS (g)	REMARKS (h)
	0	very pale brown, 10YR 8/3 silty sand, very fine, dry Powdery. 48"	Ø				5' push, 48" recovery
	1		0.1				
			Ø				
	2		Ø				
			0.1	2.0 -	SS39-DPT-15A		
	3		Ø	4.0			
			Ø				
	4		Ø				
		No Recovery					No Recovery
	5	Same as above 14"	Ø				5' push, 42" recovery
	6	very pale brown 10YR 7/4, silty sand, dense, Damp 12"	Ø				
			Ø	6.0 -	SS39-DPT-15B		
	7	very pale brown 10YR 8/2, very fine silty sand, dry Powdery. 18"	Ø	8.0			
	8		Ø				
	9	No Recovery					No Recovery
	10	Same as above 8"	Ø				5' push, 56" recovery
	11	Pale brown 2.5Y 8/2 silty sand, dense, Damp 10"	Ø	10.0 - 12.0 -	SS39-DPT-15C		
		very pale brown 10YR 8/2 silty sand, dense, damp. 18"	Ø				
	12		Ø				
	13		Ø				
	14	Pale brown 2.5Y 8/2 silty sand, damp, friable 20"	Ø				
			Ø				
	15	No Recovery					No Recovery
		Boring Terminated					Boring Terminated

SITE NAME: SS-39

HOLE NO.: SS39-DPT-15

DRILLING LOG

CLIENT	AFCEE
HOLE NUMBER	SS39-DPT-16
DRILL SUBCONTRACTOR	Vista Geosciences
SHEET / SHEETS	1 of 2
PROJECT / PROJECT NUMBER	Holloman AFB / 100-TEN-T93002-1 Task 11.06.02
MANUFACTURER'S DESIGN OF DRILL	Geoprobe 7822
NAME OF DRILLER(S)	D. West / K. Geraghty
SITE NAME	SS-39
SIZES AND TYPES OF DRILLING AND SAMPLING EQUIPMENT	2.25" rods with innersampling liners.
HOLE LOCATION	SS39-DPT-16
SURFACE ELEVATION	
DATE STARTED	11/8/10
DATE COMPLETED	11/8/10
OVERBURDEN THICKNESS	NA
DEPTH DRILLED INTO ROCK	NA
TOTAL DEPTH OF HOLE	15.0'
DEPTH OF GROUNDWATER ENCOUNTERED	10.0'
DEPTH TO WATER AND ELAPSED TIME AFTER DRILLING COMPLETED	NA
OTHER WATER LEVEL MEASUREMENTS (SPECIFY)	NA
GEOTECHNICAL SAMPLES	NO
DISTURBED	—
UNDISTURBED	—
TOTAL NUMBER OF CORE BOXES	—
SAMPLES FOR CHEMICAL ANALYSIS	Yes
VOC	yes
METALS	yes
OTHER (SPECIFY)	GRO/DRO
OTHER (SPECIFY)	—
OTHER (SPECIFY)	—
TOTAL CORE RECOVERY	—
DISPOSITION OF HOLE	Filled
BACKFILLED	yes
MONITORING WELL	NO
OTHER (SPECIFY)	—
SIGNATURE OF INSPECTOR	Pamela Clowers
LOCATION SKETCH/COMMENTS	
SCALE	

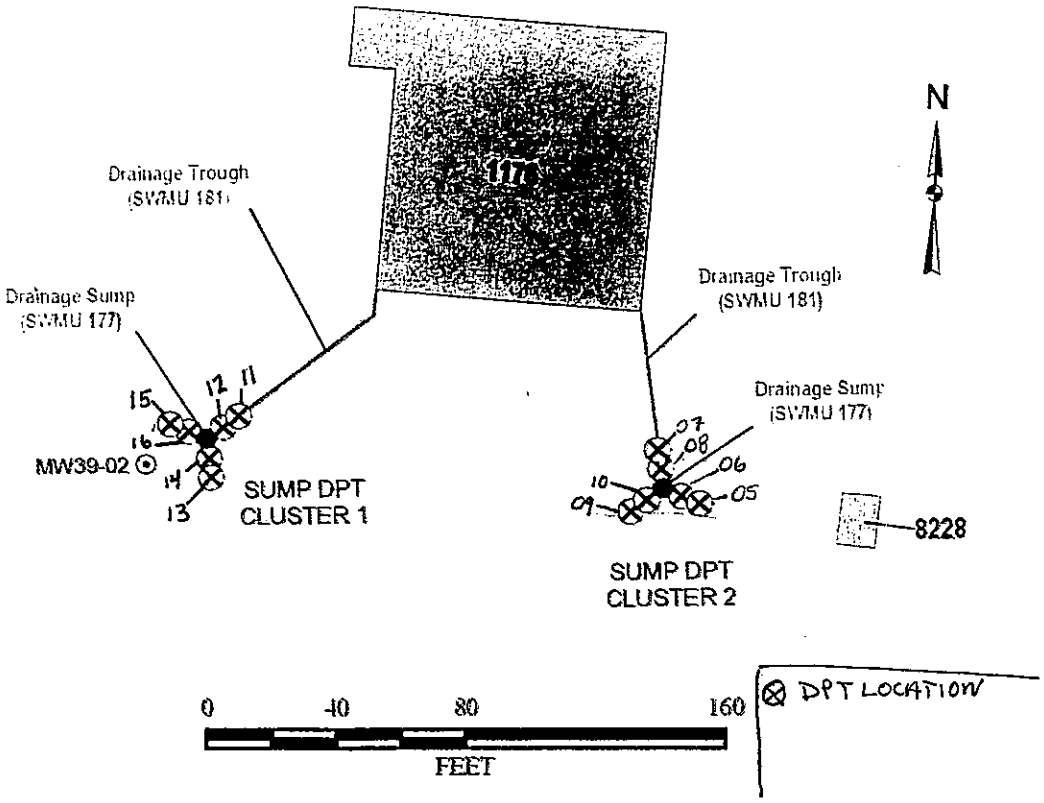

SITE NAME	SS-39
HOLE NO.	SS39-DPT-16

DRILLING LOG (CONTINUATION SHEET)

DISTRICT: AFCEE

HOLE NUMBER: SS39-DPT-16

PROJECT / PROJECT NUMBER: Holloman AFB / 100-TEN-T93002-1 Task 11.06.02

INSPECTOR: B. Clowers

SHEET 2 of 2 SHEETS

ELEV (a)	DEPTH (b)	DESCRIPTION OF MATERIALS (c)	HNU SCREENING RESULTS (PPM) (d)	PUSH / SAMPLE INTERVAL (e)	ANALYTICAL SAMPLE NO (f)	USCS (g)	REMARKS (h)
	0	Pale brown 2.5Y 8/3 silty sand, damp, friable .28"	Ø				5' push, 43" recovery
	1		Ø				
			Ø				
	2	Pink 7.5YR 8/3 silty sand slightly damp, friable .15"	Ø	1.5 - 3.5	SS39-DPT-16A		
	3		Ø				
			Ø				
	4	No Recovery					No Recovery
	5	Same as above. 6"	Ø				5' push, 46" recovery
	6	very pale brown 10YR 8/3 silty sand, Damp Dense 12"	Ø	5.0 - 7.0	SS39-DPT-16B		
		Light brown 7.5YR 6/4 silty sand, dry, friable 4"	Ø				
	7		Ø				
		very pale brown to white very fine sand, dry, powdery 24"	Ø				
	8		Ø				
			Ø				
	9	No Recovery					No Recovery
	10	~~Very pale~~ brown 10YR 7/3 silty sand, Damp, firm, Friable when squeezed 10"	Ø	10.0 - 12.0	SS39-DPT-16C		5' push, full Recovery
	11	Light brown 7.5YR 6/4 silty sand, compact, dense, firm damp but friable, white and tan mottling .50"	Ø				
	12		Ø				
			Ø				
	13		Ø				
	14		Ø				
	15	Boring Terminated					Boring Terminated

SITE NAME: SS-39

HOLE NO.: SS39-DPT-16

Well Completion Information

Holloman Air Force Base Alamogordo, New Mexico

Project Number: 100-TEN/-T93002-1 Task 11.06.02

Site: SS-39

Well ID: SS39-MW13

Date Installed: 11/7/10

Well Type: Auger Piezometer (Monitoring Well) Extraction Well

Completion Method: (Stick-up) Flush Mount

Geologic Zone: (Residuum) Interface Bedrock

Seal End Depth: 10.04 (feet) **Filter Pack Length:** 6.0 (feet)

Measuring Point Elevation (Top of Casing): _____

Total Casing Depth: _____ (feet)

Casing Inside Diameter: 2.0

Casing Material: (PVC) SLS GLS OTHER _____

Screen Beginning Depth: _____ (feet)

Screen Length: 5.0 (feet)

Screen Slot Size: 0.01 (inches)

Screen Diameter: 2.0 (inches)

Sand Type: 20/40

Remarks: _____

Prepared By: B. Clowers

DRILLING LOG

CLIENT	AFCEE
HOLE NUMBER	SS39-MW13
DRILL SUBCONTRACTOR	Vista Geosciences
SHEET / SHEETS	1 of 2
PROJECT / PROJECT NUMBER	Holloman AFB / 100-TEN-T93002-1 Task 11.06.02
MANUFACTURER'S DESIGN OF DRILL	Geoprobe 7822
NAME OF DRILLER(S)	D. West / K. Geraghty
SITE NAME	SS-39
SIZES AND TYPES OF DRILLING AND SAMPLING EQUIPMENT	3.25" rods with expendable tip.
HOLE LOCATION	SS39-MW13
SURFACE ELEVATION	
DATE STARTED	11/7/10
DATE COMPLETED	11/7/10
OVERBURDEN THICKNESS	—
DEPTH DRILLED INTO ROCK	—
TOTAL DEPTH OF HOLE	10.0'
DEPTH OF GROUNDWATER ENCOUNTERED	3.5'
DEPTH TO WATER AND ELAPSED TIME AFTER DRILLING COMPLETED	—
OTHER WATER LEVEL MEASUREMENTS (SPECIFY)	—
GEOTECHNICAL SAMPLES	NO
DISTURBED	—
UNDISTURBED	—
TOTAL NUMBER OF CORE BOXES	—
SAMPLES FOR CHEMICAL ANALYSIS	NO
VOC	—
METALS	—
OTHER (SPECIFY)	—
OTHER (SPECIFY)	—
OTHER (SPECIFY)	—
TOTAL CORE RECOVERY	—
DISPOSITION OF HOLE	
BACKFILLED	NO
MONITORING WELL	Yes
OTHER (SPECIFY)	—
SIGNATURE OF INSPECTOR	Brandon Clem
LOCATION SKETCH/COMMENTS	
SCALE	

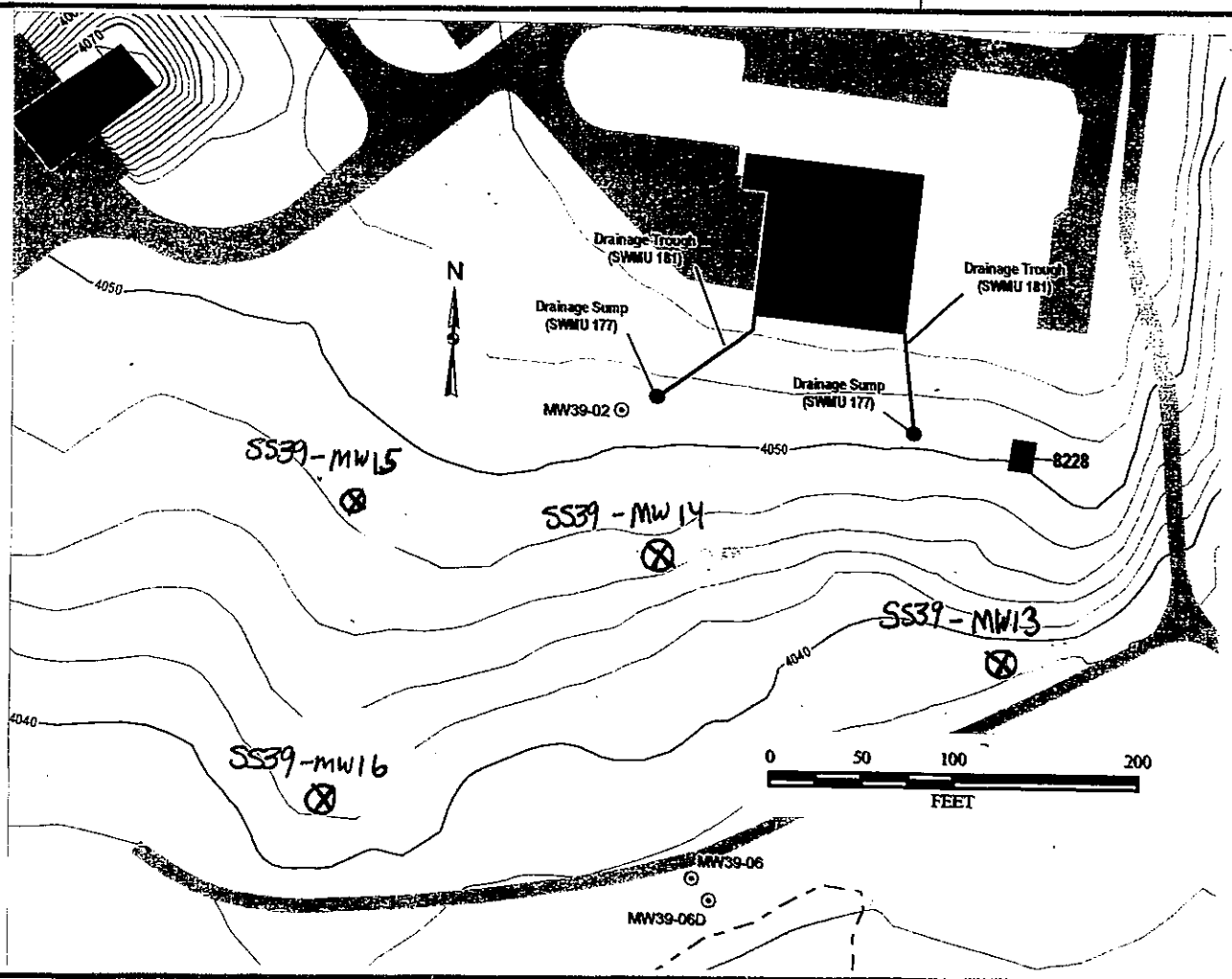

SITE NAME	SS-39
HOLE NO.	SS39-MW13

DRILLING LOG (CONTINUATION SHEET)

DISTRICT: AFCEE

HOLE NUMBER: SS39-MW13

PROJECT / PROJECT NUMBER: Holloman AFB / 100-TEN-T9 3002-1 Task 11.06.02

INSPECTOR: B. Clowers

SHEET 2 of SHEETS 2

ELEV (a)	DEPTH (b)	DESCRIPTION OF MATERIALS (c)	HNU SCREENING RESULTS (PPM) (d)	PUSH / SAMPLE INTERVAL (e)	ANALYTICAL SAMPLE NO (f)	USCS (g)	REMARKS (h)
	0	Yellow 10YR 8/6 silty sand ~~Damp~~ moist. Friable. 11"	Ø				5' push, 52" recovery
	1	Pink 7.5YR 8/4 silty sand, Saturated. 16"	Ø				
	2		Ø				Saturated Zone
		Firm sto ~~very~~ wet 10"					
	3		Ø				
	4	Very Pale brown 10YR 8/3 silty Sand, saturated 15"	Ø				Saturated Zone
	5	No recovery					No Recovery
		Pale brown 2.5Y 8/4 silty sand Saturated. 20"					5' push, 45" recovery Saturated Zone
	6						
	7	Reddish yellow 7.5YR 6/6 silty sand wet. 8" Pale brown 2.5Y 7/3 sandy clay very moist 10"					
	8	Light Bronish gray 10YR 6/2 Silty Clay. Dense, moist firm 7"					
	9	No Recovery					No Recovery
	10						Boring Terminated well installed with OPT to TD of 10' Screen 5-10'. Natural Sand Collapse to 7.4' bgs. Sand pack to 3.8' bgs. Bentonite to surface. Note: ~~After~~ while over Pushing to 12' bgs noticed lithology got soft after hard layer at 10', decided to pull up well bottom to get first water.

SITE NAME: SS-39

HOLE NO.: SS39-MW13

Well Completion Information

Holloman Air Force Base Alamogordo, New Mexico

end cap 0.3

screen + end cap 10.3

Project Number: 100-TEN-T930021 Task 11.06.02

Site: SS-39

Well ID: SS39-MW14

Date Installed: 11/8/10

Well Type: Auger Piezometer (Monitoring Well) Extraction Well

Completion Method: (Stick-up) Flush Mount

Geologic Zone: (Residuum) Interface Bedrock

Seal End Depth: 10.4 (feet) **Filter Pack Length:** 6.0 (feet)

Measuring Point Elevation (Top of Casing): _____

Total Casing Depth: _____ (feet)

Casing Inside Diameter: 2.0

Casing Material: (PVC) SLS GLS OTHER _____

Screen Beginning Depth: _____ (feet)

Screen Length: 10.0 (feet)

Screen Slot Size: 0.10 (inches)

Screen Diameter: 2.0 (inches)

Sand Type: 20/40

Remarks: sand 8.1'

20.4' TWD

4.8' stick up

Prepared By: J. Bennett

DRILLING LOG

CLIENT	AFCEE
HOLE NUMBER	SS39-MW14
DRILL SUBCONTRACTOR	Vista Geosciences
SHEET / SHEETS	1 of 2
PROJECT / PROJECT NUMBER	Holloman AFB / 100-TEN-T93002-1 Task 11.06.02
MANUFACTURER'S DESIGN OF DRILL	Geoprobe 7822
NAME OF DRILLER(S)	D. West / K. Geraghty
SITE NAME	SS-39
SIZES AND TYPES OF DRILLING AND SAMPLING EQUIPMENT	3.25" rods with expendable tip.
HOLE LOCATION	SS39-MW14
SURFACE ELEVATION	
DATE STARTED	11/8/10
DATE COMPLETED	11/8/10
OVERBURDEN THICKNESS	—
DEPTH DRILLED INTO ROCK	—
TOTAL DEPTH OF HOLE	20.4"
DEPTH OF GROUNDWATER ENCOUNTERED	7.0'
DEPTH TO WATER AND ELAPSED TIME AFTER DRILLING COMPLETED	—
OTHER WATER LEVEL MEASUREMENTS (SPECIFY)	—
GEOTECHNICAL SAMPLES	NO
DISTURBED	—
UNDISTURBED	—
TOTAL NUMBER OF CORE BOXES	—
SAMPLES FOR CHEMICAL ANALYSIS	NO
VOC	—
METALS	—
OTHER (SPECIFY)	—
OTHER (SPECIFY)	—
OTHER (SPECIFY)	—
TOTAL CORE RECOVERY	—
DISPOSITION OF HOLE	
BACKFILLED	NO
MONITORING WELL	Yes
OTHER (SPECIFY)	—
SIGNATURE OF INSPECTOR	Brandon Clem
LOCATION SKETCH/COMMENTS	
SCALE	

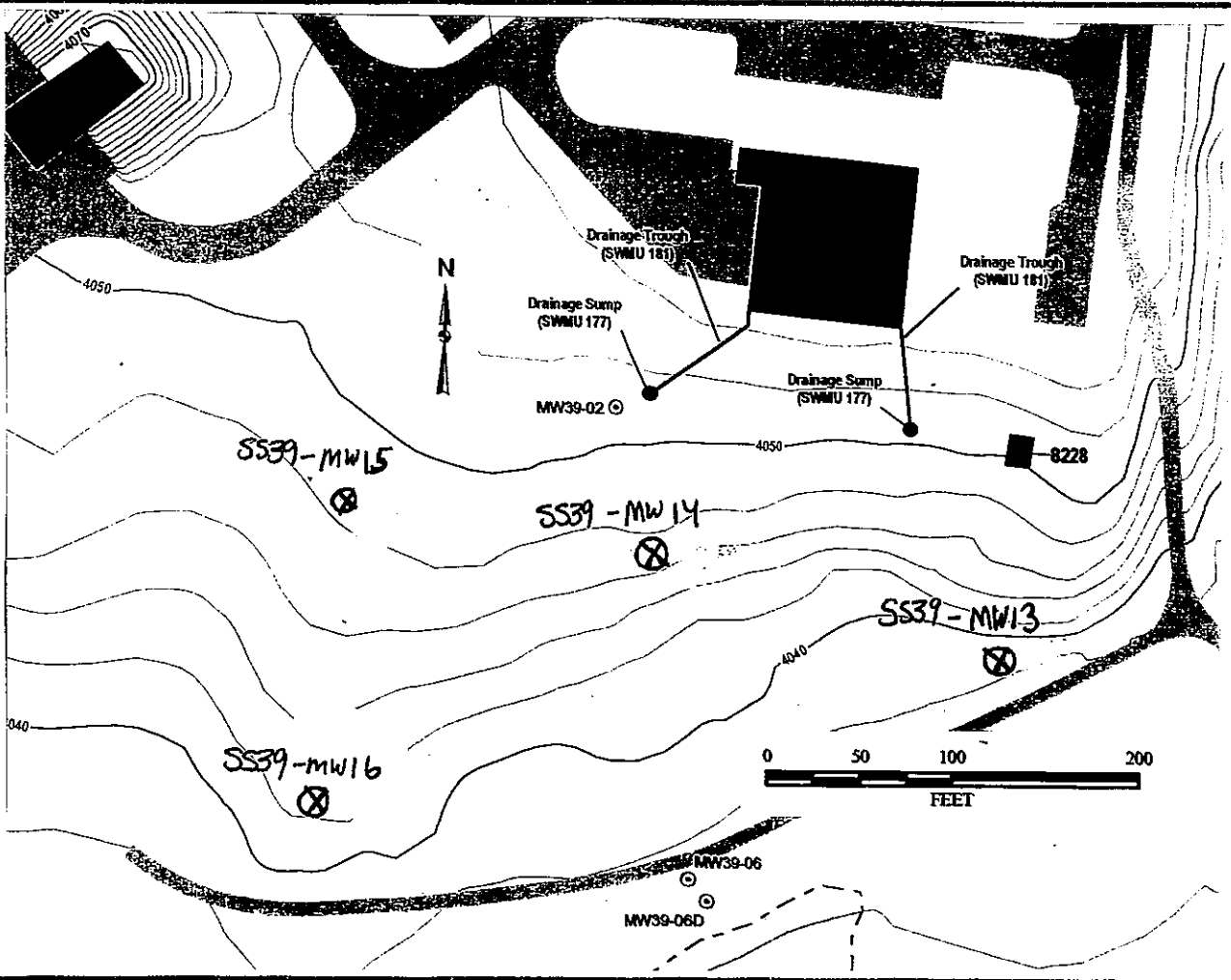

SITE NAME	SS-39
HOLE NO.	SS39-MW14

DRILLING LOG (CONTINUATION SHEET)

DISTRICT: AFCEE

HOLE NUMBER: SS39-MW14

PROJECT / PROJECT NUMBER: Holloman AFB / 100-TEN-T93002-1 Task 11.06.02

INSPECTOR: Jeremy Bennett

SHEET 2 of SHEETS 2

ELEV (a)	DEPTH (b)	DESCRIPTION OF MATERIALS (c)	HNU SCREENING RESULTS (PPM) (d)	PUSH / SAMPLE INTERVAL (e)	ANALYTICAL SAMPLE NO (f)	USCS (g)	REMARKS (h)
		Very pale brown 10YR 8/4 fine sand, dry	Ø Ø Ø Ø Ø	0-5'			2'3" recovery
	2						
	4						
	6	very pale brown 10YR 7/4, silty sand, fine wet	Ø Ø Ø Ø Ø Ø Ø	5-10'			4'1" recovery
	8						
	10	reddish yellow 7.5YR 6/6 silty sand, wet	Ø Ø Ø Ø Ø				
	12	pinkish gray 7.5YR 6/2 many fine dist. white mott damp clay plasticity					
	14	light gray 7.5YR 7/1 fine sand common coarse distinct reddish yellow mott. 7.5YR 6/8	Ø Ø Ø Ø Ø Ø Ø Ø Ø Ø Ø Ø Ø Ø Ø	10-15'			5' recovery
	16	light brownish gray 10YR 6/2 clayey sand many coarse distinct reddish yellow mott 7.5YR 6/8 damp					
	18						
	20	pale brown 2.5Y 8/2 and light gray 7.5Y 7/2 clay moist	Ø Ø Ø Ø	15-20'			
		Boring Terminated					attempted well installation hit debris stepped out 5' N hit hard layer stepped out 18' W

SITE NAME: SS-39

HOLE NO.: SS39-MW14

Well Completion Information

Holloman Air Force Base Alamogordo, New Mexico

Project Number: 100-TEN-T93002-1 Task 11.06.02

Site: SS-39

Well ID: SS39-MW15

Date Installed: 11/8/10

Well Type: Auger Piezometer (Monitoring Well) Extraction Well

Completion Method: (Stick-up) Flush Mount

Geologic Zone: (Residuum) Interface Bedrock

Seal End Depth: _____ (feet) **Filter Pack Length:** 12.1 (feet)

Measuring Point Elevation (Top of Casing): _____

Total Casing Depth: 22.65 (feet)

Casing Inside Diameter: 2.0

Casing Material: (PVC) SLS GLS OTHER _____

Screen Beginning Depth: _____ (feet)

Screen Length: 10.0 (feet)

Screen Slot Size: 0.01 (inches)

Screen Diameter: 2.0 (inches)

Sand Type: 20/40

Remarks: End Cap 0.3'
Screen + end cap - 10.3'
top of sand - 7.9'
20.43'-TWD

Prepared By: J. Bennett

DRILLING LOG

CLIENT	AFCEE
HOLE NUMBER	SS39-MW15
DRILL SUBCONTRACTOR	Vista Geosciences
SHEET / SHEETS	1 of 2
PROJECT / PROJECT NUMBER	Holloman AFB / 100-TEN-T93002-1 Task 11.06.02
MANUFACTURER'S DESIGN OF DRILL	Geoprobe 7822
NAME OF DRILLER(S)	D. West / K. Geraghty
SITE NAME	SS-39
SIZES AND TYPES OF DRILLING AND SAMPLING EQUIPMENT	3.25" rods with expendable tip.
HOLE LOCATION	SS39-MW13
SURFACE ELEVATION	
DATE STARTED	11/8/10
DATE COMPLETED	11/8/10
OVERBURDEN THICKNESS	—
DEPTH DRILLED INTO ROCK	—
TOTAL DEPTH OF HOLE	20.0
DEPTH OF GROUNDWATER ENCOUNTERED	6.0
DEPTH TO WATER AND ELAPSED TIME AFTER DRILLING COMPLETED	—
OTHER WATER LEVEL MEASUREMENTS (SPECIFY)	—
GEOTECHNICAL SAMPLES	NO
DISTURBED	—
UNDISTURBED	—
TOTAL NUMBER OF CORE BOXES	—
SAMPLES FOR CHEMICAL ANALYSIS	NO
VOC	—
METALS	—
OTHER (SPECIFY)	—
OTHER (SPECIFY)	—
OTHER (SPECIFY)	—
TOTAL CORE RECOVERY	—
DISPOSITION OF HOLE	
BACKFILLED	NO
MONITORING WELL	Yes
OTHER (SPECIFY)	—
SIGNATURE OF INSPECTOR	Brandon Clem
LOCATION SKETCH/COMMENTS	
SCALE	

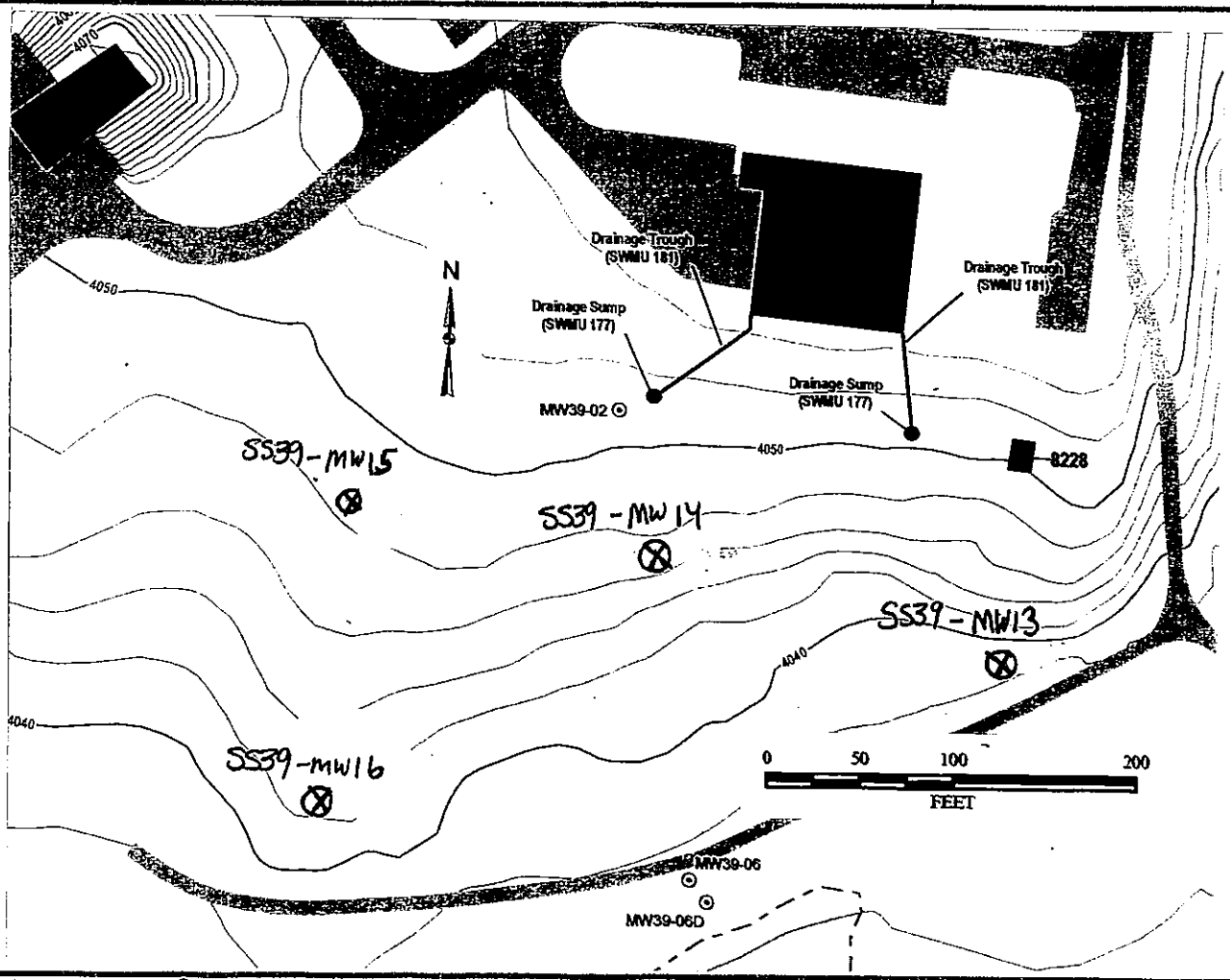

SITE NAME	SS-39
HOLE NO.	SS39-MW15

DRILLING LOG (CONTINUATION SHEET)

DISTRICT: AFCEE

HOLE NUMBER: SS39-MW15

PROJECT / PROJECT NUMBER: Holloman AFB / 100-TEN-T93002-1 Task 11.06.02

INSPECTOR: J. Bennett

SHEET 2 of SHEETS 2

ELEV (a)	DEPTH (b)	DESCRIPTION OF MATERIALS (c)	HNU SCREENING RESULTS (PPM) (d)	PUSH / SAMPLE INTERVAL (e)	ANALYTICAL SAMPLE NO (f)	USCS (g)	REMARKS (h)
		Very pale brown 10YR 8/3 silty sand fine moist	Ø	0-5'			3'6" recovery
	2						
		yellow 10YR 7/6 silty sand moist					
	4						
		very pale brown 10YR 8/4 silty sand moist	Ø	5-10'			
	6						
	8	light gray 10YR 7/1 w/ common fine distinct					
	10	very pale brown mott 10YR 7/3 clayey sand damp	Ø	10-15'			3'10" recovery
	12	yellowish red 5YR 5/6 common fine white mottles angular gypsum crystals clay damp					
	14			15'-20'			2'9" recovery
	16	water w/ depth	Ø				
	18						
	20	end of boring					

SITE NAME: SS-39

HOLE NO.: SS39-MW15

Well Completion Information

Holloman Air Force Base Alamogordo, New Mexico

Project Number: 100-TEN-T93002-1 Task 11.06.02

Site: SS-39

Well ID: SS39-MW16

Date Installed: 11/7/10

Well Type: Auger Piezometer (Monitoring Well) Extraction Well

Completion Method: (Stick-up) Flush Mount

Geologic Zone: (Residuum) Interface Bedrock

Seal End Depth: _____ (feet) **Filter Pack Length:** 11.68 (feet)

Measuring Point Elevation (Top of Casing): _____

Total Casing Depth: 17.40 (feet)

Casing Inside Diameter: 2.0

Casing Material: (PVC) SLS GLS OTHER _____

Screen Beginning Depth: _____ (feet)

Screen Length: 10.0 (feet)

Screen Slot Size: 0.01 (inches)

Screen Diameter: 2.0 (inches)

Sand Type: 20/40

Remarks: screen + end cap 10.3' top of sand - 3.25'
screen - 10' TD - 15.32
end cap 0.3'
stickup

Prepared By: J. Bennett

DRILLING LOG

CLIENT	AFCEE
HOLE NUMBER	SS39-MW16
DRILL SUBCONTRACTOR	Vista Geosciences
SHEET / SHEETS	1 of 2
PROJECT / PROJECT NUMBER	Holloman AFB / 100-TEN-T93002-1 Task 11.06.02
MANUFACTURER'S DESIGN OF DRILL	Geoprobe 7822
NAME OF DRILLER(S)	D. West / K. Geraghty
SITE NAME	SS-39
SIZES AND TYPES OF DRILLING AND SAMPLING EQUIPMENT	3.25" rods with expendable tip.
HOLE LOCATION	SS39-MW16
SURFACE ELEVATION	
DATE STARTED	11/8/10
DATE COMPLETED	11/8/10
OVERBURDEN THICKNESS	—
DEPTH DRILLED INTO ROCK	—
TOTAL DEPTH OF HOLE	15.5'
DEPTH OF GROUNDWATER ENCOUNTERED	5.0'
DEPTH TO WATER AND ELAPSED TIME AFTER DRILLING COMPLETED	—
OTHER WATER LEVEL MEASUREMENTS (SPECIFY)	—
GEOTECHNICAL SAMPLES	NO
DISTURBED	—
UNDISTURBED	—
TOTAL NUMBER OF CORE BOXES	—
SAMPLES FOR CHEMICAL ANALYSIS	NO
VOC	—
METALS	—
OTHER (SPECIFY)	—
OTHER (SPECIFY)	—
OTHER (SPECIFY)	—
TOTAL CORE RECOVERY	—
DISPOSITION OF HOLE	
BACKFILLED	NO
MONITORING WELL	Yes
OTHER (SPECIFY)	—
SIGNATURE OF INSPECTOR	Brandon Clem
LOCATION SKETCH/COMMENTS	
SCALE	

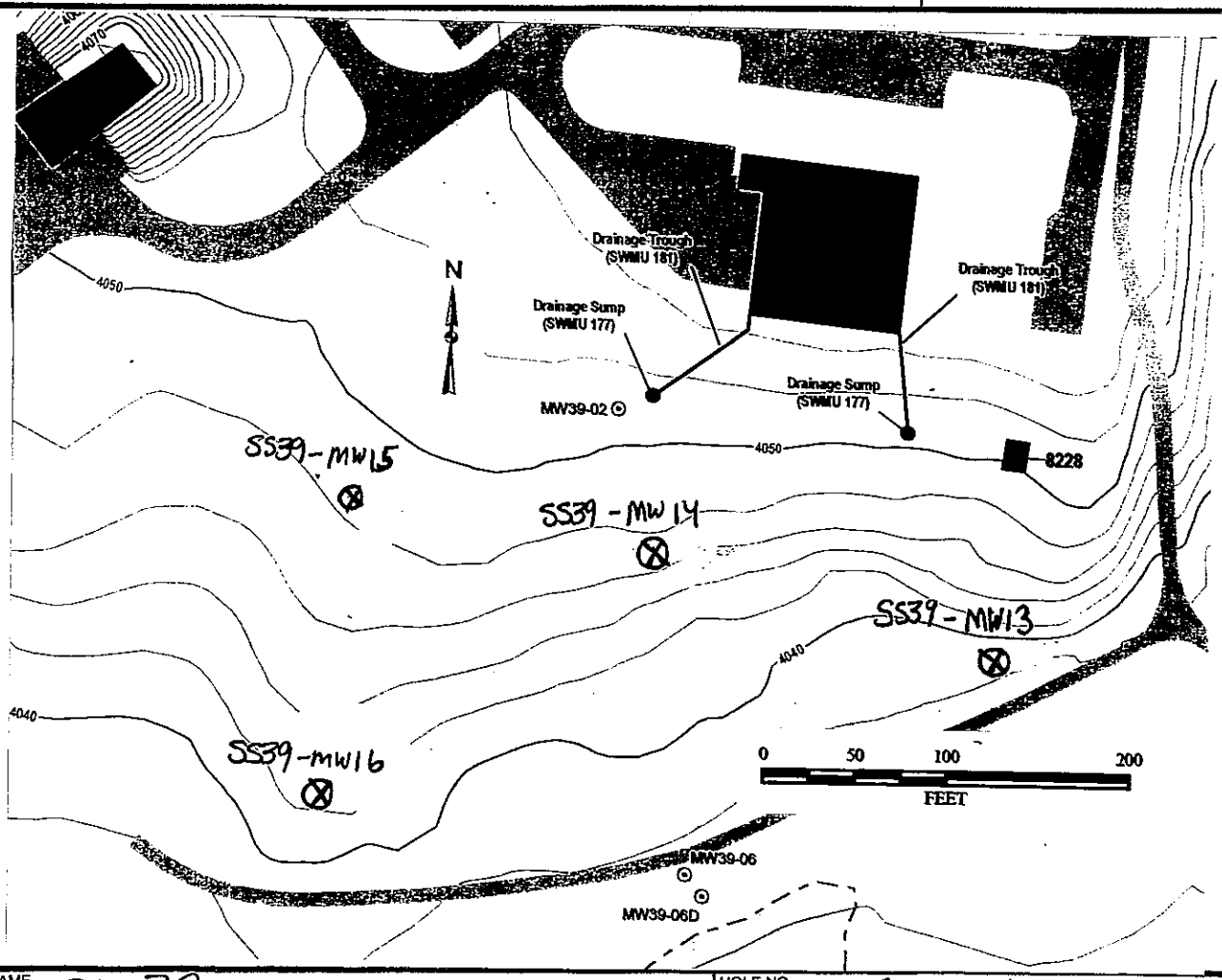

SITE NAME	SS-39
HOLE NO.	SS39-MW16

DRILLING LOG (CONTINUATION SHEET)

DISTRICT: AFCEE

HOLE NUMBER: SS39-MW16

PROJECT / PROJECT NUMBER: Holloman AFB / 100-TEW-T93002-1 TASK 11.06.02

INSPECTOR: J. Bennett

SHEET 2 of 2 SHEETS

ELEV (a)	DEPTH (b)	DESCRIPTION OF MATERIALS (c)	HNU SCREENING RESULTS (PPM) (d)	PUSH / SAMPLE INTERVAL (e)	ANALYTICAL SAMPLE NO (f)	USCS (g)	REMARKS (h)
		very pale brown 10YR 8/3 silty sand moist	Ø	0-5'			4'1" recovery
	2						
	4	yellow 10YR 7/6 silty sand moist					
	6	very pale brown 8/4 clayey sand wet saturated @ 6.5'	Ø	5-10'			5' recovery
	8						
	10	reddish yellow 7.5YR 6/6 silty sand saturated					
	12	light gray 10YR 7/2 silty sand saturated	Ø	10-12.5'			2'5" recovery
	14	light brownish gray 10YR 6/2 silty sand fine wet	Ø				3'5" recovery
	16	bottom of boring					
	18						
	20						

SITE NAME: SS-39

HOLE NO.: SS39-MW16

SL-SCREEN
Version 3.1; 02/04

Reset to Defaults

CALCULATE RISK-BASED SOIL CONCENTRATION (enter "X" in "YES" box)

YES [X]

OR

CALCULATE INCREMENTAL RISKS FROM ACTUAL SOIL CONCENTRATION (enter "X" in "YES" box and initial soil conc. below)

YES [ ]

ENTER Chemical CAS No. (numbers only, no dashes)	ENTER Initial soil conc., C_R (µg/kg)	Chemical
108883		Toluene

MORE ↓

ENTER Depth below grade to bottom of enclosed space floor, L_F (15 or 200 cm)	ENTER Depth below grade to top of contamination, L_t (cm)	ENTER Average soil temperature, T_S (°C)	ENTER Vadose zone SCS soil type (used to estimate soil vapor permeability)	OR	ENTER User-defined vadose zone soil vapor permeability, k_v (cm^2)
15	244	19	SL		

MORE ↓

ENTER Vandose zone SCS soil type (Lookup Soil Parameters)	ENTER Vadose zone soil dry bulk density, ρ_b^A (g/cm^3)	ENTER Vadose zone soil total porosity, n^V (unitless)	ENTER Vadose zone soil water-filled porosity, θ_w^V (cm^3/cm^3)	ENTER Vadose zone soil organic carbon fraction, f_{oc}^V (unitless)	ENTER Average vapor flow rate into bldg. (Leave blank to calculate) Q_{soil} (L/m)
SL	1.62	0.387	0.103	0.002	

MORE ↓

ENTER Averaging time for carcinogens, AT_C (yrs)	ENTER Averaging time for noncarcinogens, AT_{NC} (yrs)	ENTER Exposure duration, ED (yrs)	ENTER Exposure frequency, EF (days/yr)	ENTER Target risk for carcinogens, TR (unitless)	ENTER Target hazard quotient for noncarcinogens, THQ (unitless)
70	30	30	350	1.0E-06	1
				Used to calculate risk-based soil concentration.	

END

RESULTS SHEET

RISK-BASED SOIL CONCENTRATION CALCULATIONS:

Indoor exposure soil conc., carcinogen (µg/kg)	Indoor exposure soil conc., noncarcinogen (µg/kg)	Risk-based indoor exposure soil conc., (µg/kg)	Soil saturation conc., C_{sat} (µg/kg)	Final indoor exposure soil conc., (µg/kg)
NA	3.44E+03	3.44E+03	2.44E+05	3.44E+03

INCREMENTAL RISK CALCULATIONS:

Incremental risk from vapor intrusion to indoor air, carcinogen (unitless)	Hazard quotient from vapor intrusion to indoor air, noncarcinogen (unitless)
NA	NA

MESSAGE SUMMARY BELOW:
MESSAGE: The values of Csource and Cbuilding on the INTERCALCS worksheet are based on unity and do not represent actual values.

END

SL-SCREEN
Version 3.1; 02/04

Reset to Defaults

CALCULATE RISK-BASED SOIL CONCENTRATION (enter "X" in "YES" box)

YES [X]

OR

CALCULATE INCREMENTAL RISKS FROM ACTUAL SOIL CONCENTRATION (enter "X" in "YES" box and initial soil conc. below)

YES [ ]

ENTER Chemical CAS No. (numbers only, no dashes)	ENTER Initial soil conc., C_R (µg/kg)	Chemical
108883		Toluene

MORE ↓

ENTER Depth below grade to bottom of enclosed space floor, L_F (15 or 200 cm)	ENTER Depth below grade to top of contamination, L_t (cm)	ENTER Average soil temperature, T_S (°C)	ENTER Vadose zone SCS soil type (used to estimate soil vapor permeability)	OR	ENTER User-defined vadose zone soil vapor permeability, k_v (cm^2)
15	244	19	SL		

MORE ↓

ENTER Vandose zone SCS soil type (Lookup Soil Parameters)	ENTER Vadose zone soil dry bulk density, ρ_b^A (g/cm^3)	ENTER Vadose zone soil total porosity, n^V (unitless)	ENTER Vadose zone soil water-filled porosity, θ_w^V (cm^3/cm^3)	ENTER Vadose zone soil organic carbon fraction, f_{oc}^V (unitless)	ENTER Average vapor flow rate into bldg. (Leave blank to calculate) Q_{soil} (L/m)
SL	1.62	0.387	0.103	0.002	

MORE ↓

ENTER Averaging time for carcinogens, AT_C (yrs)	ENTER Averaging time for noncarcinogens, AT_{NC} (yrs)	ENTER Exposure duration, ED (yrs)	ENTER Exposure frequency, EF (days/yr)	ENTER Target risk for carcinogens, TR (unitless)	ENTER Target hazard quotient for noncarcinogens, THQ (unitless)
70	30	30	350	1.0E-05	1
				Used to calculate risk-based soil concentration.	

END

RESULTS SHEET

RISK-BASED SOIL CONCENTRATION CALCULATIONS:

Indoor exposure soil conc., carcinogen (µg/kg)	Indoor exposure soil conc., noncarcinogen (µg/kg)	Risk-based indoor exposure soil conc., (µg/kg)	Soil saturation conc., C_{sat} (µg/kg)	Final indoor exposure soil conc., (µg/kg)
NA	3.44E+03	3.44E+03	2.44E+05	3.44E+03

INCREMENTAL RISK CALCULATIONS:

Incremental risk from vapor intrusion to indoor air, carcinogen (unitless)	Hazard quotient from vapor intrusion to indoor air, noncarcinogen (unitless)
NA	NA

MESSAGE SUMMARY BELOW:
MESSAGE: The values of Csource and Cbuilding on the INTERCALCS worksheet are based on unity and do not represent actual values.

END

SL-SCREEN
Version 3.1; 02/04

Reset to Defaults

CALCULATE RISK-BASED SOIL CONCENTRATION (enter "X" in "YES" box)

YES [X]

OR

CALCULATE INCREMENTAL RISKS FROM ACTUAL SOIL CONCENTRATION (enter "X" in "YES" box and initial soil conc. below)

YES [ ]

ENTER Chemical CAS No. (numbers only, no dashes)	ENTER Initial soil conc., C_R (µg/kg)	Chemical
79016		Trichloroethylene

MORE ↓

ENTER Depth below grade to bottom of enclosed space floor, L_F (15 or 200 cm)	ENTER Depth below grade to top of contamination, L_t (cm)	ENTER Average soil temperature, T_S (°C)	ENTER Vadose zone SCS soil type (used to estimate soil vapor permeability)	OR	ENTER User-defined vadose zone soil vapor permeability, k_v (cm^2)
15	244	19	SL		

MORE ↓

ENTER Vandose zone SCS soil type (Lookup Soil Parameters)	ENTER Vadose zone soil dry bulk density, ρ_b^A (g/cm^3)	ENTER Vadose zone soil total porosity, n^V (unitless)	ENTER Vadose zone soil water-filled porosity, θ_w^V (cm^3/cm^3)	ENTER Vadose zone soil organic carbon fraction, f_{oc}^V (unitless)	ENTER Average vapor flow rate into bldg. (Leave blank to calculate) Q_{soil} (L/m)
SL	1.62	0.387	0.103	0.002	

MORE ↓

ENTER Averaging time for carcinogens, AT_C (yrs)	ENTER Averaging time for noncarcinogens, AT_{NC} (yrs)	ENTER Exposure duration, ED (yrs)	ENTER Exposure frequency, EF (days/yr)	ENTER Target risk for carcinogens, TR (unitless)	ENTER Target hazard quotient for noncarcinogens, THQ (unitless)
70	30	30	350	1.0E-06	1

Used to calculate risk-based soil concentration.

END

RESULTS SHEET

RISK-BASED SOIL CONCENTRATION CALCULATIONS:

Indoor exposure soil conc., carcinogen (µg/kg)	Indoor exposure soil conc., noncarcinogen (µg/kg)	Risk-based indoor exposure soil conc., (µg/kg)	Soil saturation conc., C_{sat} (µg/kg)	Final indoor exposure soil conc., (µg/kg)
1.14E-01	2.15E+02	1.14E-01	6.65E+05	1.14E-01

INCREMENTAL RISK CALCULATIONS:

Incremental risk from vapor intrusion to indoor air, carcinogen (unitless)	Hazard quotient from vapor intrusion to indoor air, noncarcinogen (unitless)
NA	NA

MESSAGE SUMMARY BELOW:
MESSAGE: The values of Csource and Cbuilding on the INTERCALCS worksheet are based on unity and do not represent actual values.

MESSAGE: Risk/HQ or risk-based soil concentration is based on a route-to-route extrapolation.

END

SL-SCREEN
Version 3.1; 02/04

Reset to Defaults

CALCULATE RISK-BASED SOIL CONCENTRATION (enter "X" in "YES" box)

YES: X

OR

CALCULATE INCREMENTAL RISKS FROM ACTUAL SOIL CONCENTRATION (enter "X" in "YES" box and initial soil conc. below)

YES:

ENTER Chemical CAS No. (numbers only, no dashes)	ENTER Initial soil conc., C_R (µg/kg)	Chemical
79016		Trichloroethylene

MORE ↓

ENTER Depth below grade to bottom of enclosed space floor, L_F (15 or 200 cm)	ENTER Depth below grade to top of contamination, L_t (cm)	ENTER Average soil temperature, T_S (°C)	ENTER Vadose zone SCS soil type (used to estimate soil vapor permeability)	OR	ENTER User-defined vadose zone soil vapor permeability, k_v (cm^2)
15	244	19	SL		

MORE ↓

ENTER Vandose zone SCS soil type (Lookup Soil Parameters)	ENTER Vadose zone soil dry bulk density, ρ_b^A (g/cm^3)	ENTER Vadose zone soil total porosity, n^V (unitless)	ENTER Vadose zone soil water-filled porosity, θ_w^V (cm^3/cm^3)	ENTER Vadose zone soil organic carbon fraction, f_{oc}^V (unitless)	ENTER Average vapor flow rate into bldg. (Leave blank to calculate) Q_{soil} (L/m)
SL	1.62	0.387	0.103	0.002	

MORE ↓

ENTER Averaging time for carcinogens, AT_C (yrs)	ENTER Averaging time for noncarcinogens, AT_{NC} (yrs)	ENTER Exposure duration, ED (yrs)	ENTER Exposure frequency, EF (days/yr)	ENTER Target risk for carcinogens, TR (unitless)	ENTER Target hazard quotient for noncarcinogens, THQ (unitless)
70	30	30	350	1.0E-05	1

Used to calculate risk-based soil concentration.

END

RESULTS SHEET

RISK-BASED SOIL CONCENTRATION CALCULATIONS:

Indoor exposure soil conc., carcinogen (µg/kg)	Indoor exposure soil conc., noncarcinogen (µg/kg)	Risk-based indoor exposure soil conc., (µg/kg)	Soil saturation conc., C_{sat} (µg/kg)	Final indoor exposure soil conc., (µg/kg)
1.14E+00	2.15E+02	1.14E+00	6.65E+05	1.14E+00

INCREMENTAL RISK CALCULATIONS:

Incremental risk from vapor intrusion to indoor air, carcinogen (unitless)	Hazard quotient from vapor intrusion to indoor air, noncarcinogen (unitless)
NA	NA

MESSAGE SUMMARY BELOW:
MESSAGE: The values of Csource and Cbuilding on the INTERCALCS worksheet are based on unity and do not represent actual values.

MESSAGE: Risk/HQ or risk-based soil concentration is based on a route-to-route extrapolation.

END

SL-SCREEN
Version 3.1; 02/04

Reset to Defaults

CALCULATE RISK-BASED SOIL CONCENTRATION (enter "X" in "YES" box)

YES [X]

OR

CALCULATE INCREMENTAL RISKS FROM ACTUAL SOIL CONCENTRATION (enter "X" in "YES" box and initial soil conc. below)

YES [ ]

ENTER Chemical CAS No. (numbers only, no dashes)	ENTER Initial soil conc., C_R (µg/kg)	Chemical
127184		Tetrachloroethylene

MORE ↓

ENTER Depth below grade to bottom of enclosed space floor, L_F (15 or 200 cm)	ENTER Depth below grade to top of contamination, L_t (cm)	ENTER Average soil temperature, T_S (°C)	ENTER Vadose zone SCS soil type (used to estimate soil vapor permeability)	OR	ENTER User-defined vadose zone soil vapor permeability, k_v (cm^2)
15	244	19	SL		

MORE ↓

ENTER Vandose zone SCS soil type (Lookup Soil Parameters)	ENTER Vadose zone soil dry bulk density, ρ_b^A (g/cm^3)	ENTER Vadose zone soil total porosity, n^V (unitless)	ENTER Vadose zone soil water-filled porosity, θ_w^V (cm^3/cm^3)	ENTER Vadose zone soil organic carbon fraction, f_{oc}^V (unitless)	ENTER Average vapor flow rate into bldg. (Leave blank to calculate) Q_{soil} (L/m)
SL	1.62	0.387	0.103	0.002	

MORE ↓

ENTER Averaging time for carcinogens, AT_C (yrs)	ENTER Averaging time for noncarcinogens, AT_{NC} (yrs)	ENTER Exposure duration, ED (yrs)	ENTER Exposure frequency, EF (days/yr)	ENTER Target risk for carcinogens, TR (unitless)	ENTER Target hazard quotient for noncarcinogens, THQ (unitless)
70	30	30	350	1.0E-06	1

Used to calculate risk-based soil concentration.

END

RESULTS SHEET

RISK-BASED SOIL CONCENTRATION CALCULATIONS:

Indoor exposure soil conc., carcinogen (µg/kg)	Indoor exposure soil conc., noncarcinogen (µg/kg)	Risk-based indoor exposure soil conc., (µg/kg)	Soil saturation conc., C_{sat} (µg/kg)	Final indoor exposure soil conc., (µg/kg)
1.30E+00	1.97E+03	1.30E+00	9.41E+04	1.30E+00

INCREMENTAL RISK CALCULATIONS:

Incremental risk from vapor intrusion to indoor air, carcinogen (unitless)	Hazard quotient from vapor intrusion to indoor air, noncarcinogen (unitless)
NA	NA

MESSAGE SUMMARY BELOW:
MESSAGE: The values of Csource and Cbuilding on the INTERCALCS worksheet are based on unity and do not represent actual values.

END

SL-SCREEN
Version 3.1; 02/04

Reset to Defaults

CALCULATE RISK-BASED SOIL CONCENTRATION (enter "X" in "YES" box)

YES [X]

OR

CALCULATE INCREMENTAL RISKS FROM ACTUAL SOIL CONCENTRATION (enter "X" in "YES" box and initial soil conc. below)

YES [ ]

ENTER Chemical CAS No. (numbers only, no dashes)	ENTER Initial soil conc., C_R (µg/kg)	Chemical
127184		Tetrachloroethylene

MORE ↓

ENTER Depth below grade to bottom of enclosed space floor, L_F (15 or 200 cm)	ENTER Depth below grade to top of contamination, L_t (cm)	ENTER Average soil temperature, T_S (°C)	ENTER Vadose zone SCS soil type (used to estimate soil vapor permeability)	OR	ENTER User-defined vadose zone soil vapor permeability, k_v (cm^2)
15	244	19	SL		

MORE ↓

ENTER Vandose zone SCS soil type (Lookup Soil Parameters)	ENTER Vadose zone soil dry bulk density, ρ_b^A (g/cm^3)	ENTER Vadose zone soil total porosity, n^V (unitless)	ENTER Vadose zone soil water-filled porosity, θ_w^V (cm^3/cm^3)	ENTER Vadose zone soil organic carbon fraction, f_{oc}^V (unitless)	ENTER Average vapor flow rate into bldg. (Leave blank to calculate) Q_{soil} (L/m)
SL	1.62	0.387	0.103	0.002	

MORE ↓

ENTER Averaging time for carcinogens, AT_C (yrs)	ENTER Averaging time for noncarcinogens, AT_{NC} (yrs)	ENTER Exposure duration, ED (yrs)	ENTER Exposure frequency, EF (days/yr)	ENTER Target risk for carcinogens, TR (unitless)	ENTER Target hazard quotient for noncarcinogens, THQ (unitless)
70	30	30	350	1.0E-05	1
				Used to calculate risk-based soil concentration.	

END

RESULTS SHEET

RISK-BASED SOIL CONCENTRATION CALCULATIONS:

Indoor exposure soil conc., carcinogen (µg/kg)	Indoor exposure soil conc., noncarcinogen (µg/kg)	Risk-based indoor exposure soil conc., (µg/kg)	Soil saturation conc., C_{sat} (µg/kg)	Final indoor exposure soil conc., (µg/kg)
1.30E+01	1.97E+03	1.30E+01	9.41E+04	1.30E+01

INCREMENTAL RISK CALCULATIONS:

Incremental risk from vapor intrusion to indoor air, carcinogen (unitless)	Hazard quotient from vapor intrusion to indoor air, noncarcinogen (unitless)
NA	NA

MESSAGE SUMMARY BELOW:
MESSAGE: The values of Csource and Cbuilding on the INTERCALCS worksheet are based on unity and do not represent actual values.

END

SL-SCREEN
Version 3.1; 02/04

Reset to Defaults

CALCULATE RISK-BASED SOIL CONCENTRATION (enter "X" in "YES" box)

YES [X]

OR

CALCULATE INCREMENTAL RISKS FROM ACTUAL SOIL CONCENTRATION (enter "X" in "YES" box and initial soil conc. below)

YES [ ]

ENTER Chemical CAS No. (numbers only, no dashes)	ENTER Initial soil conc., C_R (µg/kg)	Chemical
95476		o-Xylene

MORE ↓

ENTER Depth below grade to bottom of enclosed space floor, L_F (15 or 200 cm)	ENTER Depth below grade to top of contamination, L_t (cm)	ENTER Average soil temperature, T_S (°C)	ENTER Vadose zone SCS soil type (used to estimate soil vapor permeability)	OR	ENTER User-defined vadose zone soil vapor permeability, k_v (cm^2)
15	244	19	SL		

MORE ↓

ENTER Vandose zone SCS soil type (Lookup Soil Parameters)	ENTER Vadose zone soil dry bulk density, ρ_b^A (g/cm^3)	ENTER Vadose zone soil total porosity, n^V (unitless)	ENTER Vadose zone soil water-filled porosity, θ_w^V (cm^3/cm^3)	ENTER Vadose zone soil organic carbon fraction, f_{oc}^V (unitless)	ENTER Average vapor flow rate into bldg. (Leave blank to calculate) Q_{soil} (L/m)
SL	1.62	0.387	0.103	0.002	

MORE ↓

ENTER Averaging time for carcinogens, AT_C (yrs)	ENTER Averaging time for noncarcinogens, AT_{NC} (yrs)	ENTER Exposure duration, ED (yrs)	ENTER Exposure frequency, EF (days/yr)	ENTER Target risk for carcinogens, TR (unitless)	ENTER Target hazard quotient for noncarcinogens, THQ (unitless)
70	30	30	350	1.0E-06	1
				Used to calculate risk-based soil concentration.	

END

RESULTS SHEET

RISK-BASED SOIL CONCENTRATION CALCULATIONS:

Indoor exposure soil conc., carcinogen (µg/kg)	Indoor exposure soil conc., noncarcinogen (µg/kg)	Risk-based indoor exposure soil conc., (µg/kg)	Soil saturation conc., C_{sat} (µg/kg)	Final indoor exposure soil conc., (µg/kg)
NA	2.03E+03	2.03E+03	1.45E+05	2.03E+03

INCREMENTAL RISK CALCULATIONS:

Incremental risk from vapor intrusion to indoor air, carcinogen (unitless)	Hazard quotient from vapor intrusion to indoor air, noncarcinogen (unitless)
NA	NA

MESSAGE SUMMARY BELOW:
MESSAGE: The values of Csource and Cbuilding on the INTERCALCS worksheet are based on unity and do not represent actual values.

END

SL-SCREEN
Version 3.1; 02/04

Reset to Defaults

CALCULATE RISK-BASED SOIL CONCENTRATION (enter "X" in "YES" box)

YES [X]

OR

CALCULATE INCREMENTAL RISKS FROM ACTUAL SOIL CONCENTRATION (enter "X" in "YES" box and initial soil conc. below)

YES [ ]

ENTER Chemical CAS No. (numbers only, no dashes)	ENTER Initial soil conc., C_R (µg/kg)	Chemical
95476		o-Xylene

MORE ↓

ENTER Depth below grade to bottom of enclosed space floor, L_F (15 or 200 cm)	ENTER Depth below grade to top of contamination, L_t (cm)	ENTER Average soil temperature, T_S (°C)	ENTER Vadose zone SCS soil type (used to estimate soil vapor permeability)	OR	ENTER User-defined vadose zone soil vapor permeability, k_v (cm^2)
15	244	19	SL		

MORE ↓

ENTER Vandose zone SCS soil type (Lookup Soil Parameters)	ENTER Vadose zone soil dry bulk density, ρ_b^A (g/cm^3)	ENTER Vadose zone soil total porosity, n^V (unitless)	ENTER Vadose zone soil water-filled porosity, θ_w^V (cm^3/cm^3)	ENTER Vadose zone soil organic carbon fraction, f_{oc}^V (unitless)	ENTER Average vapor flow rate into bldg. (Leave blank to calculate) Q_{soil} (L/m)
SL	1.62	0.387	0.103	0.002	

MORE ↓

ENTER Averaging time for carcinogens, AT_C (yrs)	ENTER Averaging time for noncarcinogens, AT_{NC} (yrs)	ENTER Exposure duration, ED (yrs)	ENTER Exposure frequency, EF (days/yr)	ENTER Target risk for carcinogens, TR (unitless)	ENTER Target hazard quotient for noncarcinogens, THQ (unitless)
70	30	30	350	1.0E-05	1
				Used to calculate risk-based soil concentration.	

END

RESULTS SHEET

RISK-BASED SOIL CONCENTRATION CALCULATIONS:

Indoor exposure soil conc., carcinogen (µg/kg)	Indoor exposure soil conc., noncarcinogen (µg/kg)	Risk-based indoor exposure soil conc., (µg/kg)	Soil saturation conc., C_{sat} (µg/kg)	Final indoor exposure soil conc., (µg/kg)
NA	2.03E+03	2.03E+03	1.45E+05	2.03E+03

INCREMENTAL RISK CALCULATIONS:

Incremental risk from vapor intrusion to indoor air, carcinogen (unitless)	Hazard quotient from vapor intrusion to indoor air, noncarcinogen (unitless)
NA	NA

MESSAGE SUMMARY BELOW:
MESSAGE: The values of Csource and Cbuilding on the INTERCALCS worksheet are based on unity and do not represent actual values.

END

SL-SCREEN
Version 3.1; 02/04

Reset to Defaults

CALCULATE RISK-BASED SOIL CONCENTRATION (enter "X" in "YES" box)

YES [X]

OR

CALCULATE INCREMENTAL RISKS FROM ACTUAL SOIL CONCENTRATION (enter "X" in "YES" box and initial soil conc. below)

YES [ ]

ENTER Chemical CAS No. (numbers only, no dashes)	ENTER Initial soil conc., C_R (µg/kg)	Chemical
91203		Naphthalene

MORE ↓

ENTER Depth below grade to bottom of enclosed space floor, L_F (15 or 200 cm)	ENTER Depth below grade to top of contamination, L_t (cm)	ENTER Average soil temperature, T_S (°C)	ENTER Vadose zone SCS soil type (used to estimate soil vapor permeability)	OR	ENTER User-defined vadose zone soil vapor permeability, k_v (cm^2)
15	244	19	SL		

MORE ↓

ENTER Vandose zone SCS soil type (Lookup Soil Parameters)	ENTER Vadose zone soil dry bulk density, ρ_b^A (g/cm^3)	ENTER Vadose zone soil total porosity, n^V (unitless)	ENTER Vadose zone soil water-filled porosity, θ_w^V (cm^3/cm^3)	ENTER Vadose zone soil organic carbon fraction, f_{oc}^V (unitless)	ENTER Average vapor flow rate into bldg. (Leave blank to calculate) Q_{soil} (L/m)
SIL	1.49	0.439	0.18	0.002	

MORE ↓

ENTER Averaging time for carcinogens, AT_C (yrs)	ENTER Averaging time for noncarcinogens, AT_{NC} (yrs)	ENTER Exposure duration, ED (yrs)	ENTER Exposure frequency, EF (days/yr)	ENTER Target risk for carcinogens, TR (unitless)	ENTER Target hazard quotient for noncarcinogens, THQ (unitless)
70	30	30	350	1.0E-06	1

Used to calculate risk-based soil concentration.

END

RESULTS SHEET

RISK-BASED SOIL CONCENTRATION CALCULATIONS:

Indoor exposure soil conc., carcinogen (µg/kg)	Indoor exposure soil conc., noncarcinogen (µg/kg)	Risk-based indoor exposure soil conc., (µg/kg)	Soil saturation conc., C_{sat} (µg/kg)	Final indoor exposure soil conc., (µg/kg)
NA	4.75E+03	4.75E+03	1.28E+05	4.75E+03

INCREMENTAL RISK CALCULATIONS:

Incremental risk from vapor intrusion to indoor air, carcinogen (unitless)	Hazard quotient from vapor intrusion to indoor air, noncarcinogen (unitless)
NA	NA

MESSAGE SUMMARY BELOW:
MESSAGE: The values of Csource and Cbuilding on the INTERCALCS worksheet are based on unity and do not represent actual values.

END

SL-SCREEN
Version 3.1; 02/04

Reset to Defaults

CALCULATE RISK-BASED SOIL CONCENTRATION (enter "X" in "YES" box)

YES [X]

OR

CALCULATE INCREMENTAL RISKS FROM ACTUAL SOIL CONCENTRATION (enter "X" in "YES" box and initial soil conc. below)

YES [ ]

ENTER Chemical CAS No. (numbers only, no dashes)	ENTER Initial soil conc., C_R (µg/kg)	Chemical
91203		Naphthalene

MORE ↓

ENTER Depth below grade to bottom of enclosed space floor, L_F (15 or 200 cm)	ENTER Depth below grade to top of contamination, L_t (cm)	ENTER Average soil temperature, T_S (°C)	ENTER Vadose zone SCS soil type (used to estimate soil vapor permeability)	OR	ENTER User-defined vadose zone soil vapor permeability, k_v (cm^2)
15	244	19	SL		

MORE ↓

ENTER Vandose zone SCS soil type (Lookup Soil Parameters)	ENTER Vadose zone soil dry bulk density, ρ_b^A (g/cm^3)	ENTER Vadose zone soil total porosity, n^V (unitless)	ENTER Vadose zone soil water-filled porosity, θ_w^V (cm^3/cm^3)	ENTER Vadose zone soil organic carbon fraction, f_{oc}^V (unitless)	ENTER Average vapor flow rate into bldg. (Leave blank to calculate) Q_{soil} (L/m)
SIL	1.49	0.439	0.18	0.002	

MORE ↓

ENTER Averaging time for carcinogens, AT_C (yrs)	ENTER Averaging time for noncarcinogens, AT_{NC} (yrs)	ENTER Exposure duration, ED (yrs)	ENTER Exposure frequency, EF (days/yr)	ENTER Target risk for carcinogens, TR (unitless)	ENTER Target hazard quotient for noncarcinogens, THQ (unitless)
70	30	30	350	1.0E-05	1

Used to calculate risk-based soil concentration.

END

RESULTS SHEET

RISK-BASED SOIL CONCENTRATION CALCULATIONS:

Indoor exposure soil conc., carcinogen (µg/kg)	Indoor exposure soil conc., noncarcinogen (µg/kg)	Risk-based indoor exposure soil conc., (µg/kg)	Soil saturation conc., C_{sat} (µg/kg)	Final indoor exposure soil conc., (µg/kg)
NA	4.75E+03	4.75E+03	1.28E+05	4.75E+03

INCREMENTAL RISK CALCULATIONS:

Incremental risk from vapor intrusion to indoor air, carcinogen (unitless)	Hazard quotient from vapor intrusion to indoor air, noncarcinogen (unitless)
NA	NA

MESSAGE SUMMARY BELOW:
MESSAGE: The values of Csource and Cbuilding on the INTERCALCS worksheet are based on unity and do not represent actual values.

END

SL-SCREEN
Version 3.1; 02/04

Reset to Defaults

CALCULATE RISK-BASED SOIL CONCENTRATION (enter "X" in "YES" box)

YES [X]

OR

CALCULATE INCREMENTAL RISKS FROM ACTUAL SOIL CONCENTRATION (enter "X" in "YES" box and initial soil conc. below)

YES [ ]

ENTER Chemical CAS No. (numbers only, no dashes)	ENTER Initial soil conc., C_R (µg/kg)	Chemical
75092		Methylene chloride

MORE ↓

ENTER Depth below grade to bottom of enclosed space floor, L_F (15 or 200 cm)	ENTER Depth below grade to top of contamination, L_t (cm)	ENTER Average soil temperature, T_S (°C)	ENTER Vadose zone SCS soil type (used to estimate soil vapor permeability)	OR	ENTER User-defined vadose zone soil vapor permeability, k_v (cm^2)
15	244	19	SL		

MORE ↓

ENTER Vandose zone SCS soil type (Lookup Soil Parameters)	ENTER Vadose zone soil dry bulk density, ρ_b^A (g/cm^3)	ENTER Vadose zone soil total porosity, n^V (unitless)	ENTER Vadose zone soil water-filled porosity, θ_w^V (cm^3/cm^3)	ENTER Vadose zone soil organic carbon fraction, f_{oc}^V (unitless)	ENTER Average vapor flow rate into bldg. (Leave blank to calculate) Q_{soil} (L/m)
SL	1.62	0.387	0.103	0.002	

MORE ↓

ENTER Averaging time for carcinogens, AT_C (yrs)	ENTER Averaging time for noncarcinogens, AT_{NC} (yrs)	ENTER Exposure duration, ED (yrs)	ENTER Exposure frequency, EF (days/yr)	ENTER Target risk for carcinogens, TR (unitless)	ENTER Target hazard quotient for noncarcinogens, THQ (unitless)
70	30	30	350	1.0E-06	1
				Used to calculate risk-based soil concentration.	

END

RESULTS SHEET

RISK-BASED SOIL CONCENTRATION CALCULATIONS:

Indoor exposure soil conc., carcinogen (µg/kg)	Indoor exposure soil conc., noncarcinogen (µg/kg)	Risk-based indoor exposure soil conc., (µg/kg)	Soil saturation conc., C_{sat} (µg/kg)	Final indoor exposure soil conc., (µg/kg)
2.54E+01	1.54E+04	2.54E+01	1.30E+06	2.54E+01

INCREMENTAL RISK CALCULATIONS:

Incremental risk from vapor intrusion to indoor air, carcinogen (unitless)	Hazard quotient from vapor intrusion to indoor air, noncarcinogen (unitless)
NA	NA

MESSAGE SUMMARY BELOW:
MESSAGE: The values of Csource and Cbuilding on the INTERCALCS worksheet are based on unity and do not represent actual values.

END

SL-SCREEN
Version 3.1; 02/04

Reset to Defaults

CALCULATE RISK-BASED SOIL CONCENTRATION (enter "X" in "YES" box)

YES [X]

OR

CALCULATE INCREMENTAL RISKS FROM ACTUAL SOIL CONCENTRATION (enter "X" in "YES" box and initial soil conc. below)

YES [ ]

ENTER Chemical CAS No. (numbers only, no dashes)	ENTER Initial soil conc., C_R (µg/kg)	Chemical
75092		Methylene chloride

MORE ↓

ENTER Depth below grade to bottom of enclosed space floor, L_F (15 or 200 cm)	ENTER Depth below grade to top of contamination, L_t (cm)	ENTER Average soil temperature, T_S (°C)	ENTER Vadose zone SCS soil type (used to estimate soil vapor permeability)	OR	ENTER User-defined vadose zone soil vapor permeability, k_v (cm^2)
15	244	19	SL		

MORE ↓

ENTER Vandose zone SCS soil type (Lookup Soil Parameters)	ENTER Vadose zone soil dry bulk density, ρ_b^A (g/cm^3)	ENTER Vadose zone soil total porosity, n^V (unitless)	ENTER Vadose zone soil water-filled porosity, θ_w^V (cm^3/cm^3)	ENTER Vadose zone soil organic carbon fraction, f_{oc}^V (unitless)	ENTER Average vapor flow rate into bldg. (Leave blank to calculate) Q_{soil} (L/m)
SL	1.62	0.387	0.103	0.002	

MORE ↓

ENTER Averaging time for carcinogens, AT_C (yrs)	ENTER Averaging time for noncarcinogens, AT_{NC} (yrs)	ENTER Exposure duration, ED (yrs)	ENTER Exposure frequency, EF (days/yr)	ENTER Target risk for carcinogens, TR (unitless)	ENTER Target hazard quotient for noncarcinogens, THQ (unitless)
70	30	30	350	1.0E-05	1
				Used to calculate risk-based soil concentration.	

END

RESULTS SHEET

RISK-BASED SOIL CONCENTRATION CALCULATIONS:

Indoor exposure soil conc., carcinogen (µg/kg)	Indoor exposure soil conc., noncarcinogen (µg/kg)	Risk-based indoor exposure soil conc., (µg/kg)	Soil saturation conc., C_{sat} (µg/kg)	Final indoor exposure soil conc., (µg/kg)
2.54E+02	1.54E+04	2.54E+02	1.30E+06	2.54E+02

INCREMENTAL RISK CALCULATIONS:

Incremental risk from vapor intrusion to indoor air, carcinogen (unitless)	Hazard quotient from vapor intrusion to indoor air, noncarcinogen (unitless)
NA	NA

MESSAGE SUMMARY BELOW:
MESSAGE: The values of Csource and Cbuilding on the INTERCALCS worksheet are based on unity and do not represent actual values.

END

SL-SCREEN
Version 3.1; 02/04

Reset to Defaults

CALCULATE RISK-BASED SOIL CONCENTRATION (enter "X" in "YES" box)

YES: X

OR

CALCULATE INCREMENTAL RISKS FROM ACTUAL SOIL CONCENTRATION (enter "X" in "YES" box and initial soil conc. below)

YES:

ENTER Chemical CAS No. (numbers only, no dashes)	ENTER Initial soil conc., C_R (µg/kg)	Chemical
7439976		Mercury (elemental)

MORE ↓

ENTER Depth below grade to bottom of enclosed space floor, L_F (15 or 200 cm)	ENTER Depth below grade to top of contamination, L_t (cm)	ENTER Average soil temperature, T_S (°C)	ENTER Vadose zone SCS soil type (used to estimate soil vapor permeability)	OR	ENTER User-defined vadose zone soil vapor permeability, k_v (cm^2)
15	244	19	SL		

MORE ↓

ENTER Vandose zone SCS soil type (Lookup Soil Parameters)	ENTER Vadose zone soil dry bulk density, ρ_b^A (g/cm^3)	ENTER Vadose zone soil total porosity, n^V (unitless)	ENTER Vadose zone soil water-filled porosity, θ_w^V (cm^3/cm^3)	ENTER Vadose zone soil organic carbon fraction, f_{oc}^V (unitless)	ENTER Average vapor flow rate into bldg. (Leave blank to calculate) Q_{soil} (L/m)
SL	1.62	0.387	0.103	0.002	

MORE ↓

ENTER Averaging time for carcinogens, AT_C (yrs)	ENTER Averaging time for noncarcinogens, AT_{NC} (yrs)	ENTER Exposure duration, ED (yrs)	ENTER Exposure frequency, EF (days/yr)	ENTER Target risk for carcinogens, TR (unitless)	ENTER Target hazard quotient for noncarcinogens, THQ (unitless)
70	30	30	350	1.0E-06	1

Used to calculate risk-based soil concentration.

END

RESULTS SHEET

RISK-BASED SOIL CONCENTRATION CALCULATIONS:

Indoor exposure soil conc., carcinogen (µg/kg)	Indoor exposure soil conc., noncarcinogen (µg/kg)	Risk-based indoor exposure soil conc., (µg/kg)	Soil saturation conc., C_{sat} (µg/kg)	Final indoor exposure soil conc., (µg/kg)
NA	1.12E+00	1.12E+00	1.04E+06	1.12E+00

INCREMENTAL RISK CALCULATIONS:

Incremental risk from vapor intrusion to indoor air, carcinogen (unitless)	Hazard quotient from vapor intrusion to indoor air, noncarcinogen (unitless)
NA	NA

MESSAGE SUMMARY BELOW:
MESSAGE: The values of Csource and Cbuilding on the INTERCALCS worksheet are based on unity and do not represent actual values.

END

SL-SCREEN
Version 3.1; 02/04

Reset to Defaults

CALCULATE RISK-BASED SOIL CONCENTRATION (enter "X" in "YES" box)

YES [X]

OR

CALCULATE INCREMENTAL RISKS FROM ACTUAL SOIL CONCENTRATION (enter "X" in "YES" box and initial soil conc. below)

YES [ ]

ENTER Chemical CAS No. (numbers only, no dashes)	ENTER Initial soil conc., C_R (µg/kg)	Chemical
7439976		Mercury (elemental)

MORE ↓

ENTER Depth below grade to bottom of enclosed space floor, L_F (15 or 200 cm)	ENTER Depth below grade to top of contamination, L_t (cm)	ENTER Average soil temperature, T_S (°C)	ENTER Vadose zone SCS soil type (used to estimate soil vapor permeability)	OR	ENTER User-defined vadose zone soil vapor permeability, k_v (cm^2)
15	244	19	SL		

MORE ↓

ENTER Vandose zone SCS soil type (Lookup Soil Parameters)	ENTER Vadose zone soil dry bulk density, ρ_b^A (g/cm^3)	ENTER Vadose zone soil total porosity, n^V (unitless)	ENTER Vadose zone soil water-filled porosity, θ_w^V (cm^3/cm^3)	ENTER Vadose zone soil organic carbon fraction, f_{oc}^V (unitless)	ENTER Average vapor flow rate into bldg. (Leave blank to calculate) Q_{soil} (L/m)
SL	1.62	0.387	0.103	0.002	

MORE ↓

ENTER Averaging time for carcinogens, AT_C (yrs)	ENTER Averaging time for noncarcinogens, AT_{NC} (yrs)	ENTER Exposure duration, ED (yrs)	ENTER Exposure frequency, EF (days/yr)	ENTER Target risk for carcinogens, TR (unitless)	ENTER Target hazard quotient for noncarcinogens, THQ (unitless)
70	30	30	350	1.0E-05	1

Used to calculate risk-based soil concentration.

END

RESULTS SHEET

RISK-BASED SOIL CONCENTRATION CALCULATIONS:

Indoor exposure soil conc., carcinogen (µg/kg)	Indoor exposure soil conc., noncarcinogen (µg/kg)	Risk-based indoor exposure soil conc., (µg/kg)	Soil saturation conc., C_{sat} (µg/kg)	Final indoor exposure soil conc., (µg/kg)
NA	1.12E+00	1.12E+00	1.04E+06	1.12E+00

INCREMENTAL RISK CALCULATIONS:

Incremental risk from vapor intrusion to indoor air, carcinogen (unitless)	Hazard quotient from vapor intrusion to indoor air, noncarcinogen (unitless)
NA	NA

MESSAGE SUMMARY BELOW:
MESSAGE: The values of Csource and Cbuilding on the INTERCALCS worksheet are based on unity and do not represent actual values.

END

SL-SCREEN
Version 3.1; 02/04

Reset to Defaults

CALCULATE RISK-BASED SOIL CONCENTRATION (enter "X" in "YES" box)

YES [X]

OR

CALCULATE INCREMENTAL RISKS FROM ACTUAL SOIL CONCENTRATION (enter "X" in "YES" box and initial soil conc. below)

YES [ ]

ENTER Chemical CAS No. (numbers only, no dashes)	ENTER Initial soil conc., C_R (µg/kg)	Chemical
100414		Ethylbenzene

MORE ↓

ENTER Depth below grade to bottom of enclosed space floor, L_F (15 or 200 cm)	ENTER Depth below grade to top of contamination, L_t (cm)	ENTER Average soil temperature, T_S (°C)	ENTER Vadose zone SCS soil type (used to estimate soil vapor permeability)	OR	ENTER User-defined vadose zone soil vapor permeability, k_v (cm^2)
15	244	19	SL		

MORE ↓

ENTER Vandose zone SCS soil type (Lookup Soil Parameters)	ENTER Vadose zone soil dry bulk density, ρ_b^A (g/cm^3)	ENTER Vadose zone soil total porosity, n^V (unitless)	ENTER Vadose zone soil water-filled porosity, θ_w^V (cm^3/cm^3)	ENTER Vadose zone soil organic carbon fraction, f_{oc}^V (unitless)	ENTER Average vapor flow rate into bldg. (Leave blank to calculate) Q_{soil} (L/m)
SL	1.62	0.387	0.103	0.002	

MORE ↓

ENTER Averaging time for carcinogens, AT_C (yrs)	ENTER Averaging time for noncarcinogens, AT_{NC} (yrs)	ENTER Exposure duration, ED (yrs)	ENTER Exposure frequency, EF (days/yr)	ENTER Target risk for carcinogens, TR (unitless)	ENTER Target hazard quotient for noncarcinogens, THQ (unitless)
70	30	30	350	1.0E-06	1
				Used to calculate risk-based soil concentration.	

END

RESULTS SHEET

RISK-BASED SOIL CONCENTRATION CALCULATIONS:

Indoor exposure soil conc., carcinogen (µg/kg)	Indoor exposure soil conc., noncarcinogen (µg/kg)	Risk-based indoor exposure soil conc., (µg/kg)	Soil saturation conc., C_{sat} (µg/kg)	Final indoor exposure soil conc., (µg/kg)
NA	1.37E+04	1.37E+04	1.40E+05	1.37E+04

INCREMENTAL RISK CALCULATIONS:

Incremental risk from vapor intrusion to indoor air, carcinogen (unitless)	Hazard quotient from vapor intrusion to indoor air, noncarcinogen (unitless)
NA	NA

MESSAGE SUMMARY BELOW:
MESSAGE: The values of Csource and Cbuilding on the INTERCALCS worksheet are based on unity and do not represent actual values.

END

SL-SCREEN
Version 3.1; 02/04

Reset to Defaults

CALCULATE RISK-BASED SOIL CONCENTRATION (enter "X" in "YES" box)

YES [X]

OR

CALCULATE INCREMENTAL RISKS FROM ACTUAL SOIL CONCENTRATION (enter "X" in "YES" box and initial soil conc. below)

YES [ ]

ENTER Chemical CAS No. (numbers only, no dashes)	ENTER Initial soil conc., C_R (µg/kg)	Chemical
100414		Ethylbenzene

MORE ↓

ENTER Depth below grade to bottom of enclosed space floor, L_F (15 or 200 cm)	ENTER Depth below grade to top of contamination, L_t (cm)	ENTER Average soil temperature, T_S (°C)	ENTER Vadose zone SCS soil type (used to estimate soil vapor permeability)	OR	ENTER User-defined vadose zone soil vapor permeability, k_v (cm^2)
15	244	19	SL		

MORE ↓

ENTER Vandose zone SCS soil type (Lookup Soil Parameters)	ENTER Vadose zone soil dry bulk density, ρ_b^A (g/cm^3)	ENTER Vadose zone soil total porosity, n^V (unitless)	ENTER Vadose zone soil water-filled porosity, θ_w^V (cm^3/cm^3)	ENTER Vadose zone soil organic carbon fraction, f_{oc}^V (unitless)	ENTER Average vapor flow rate into bldg. (Leave blank to calculate) Q_{soil} (L/m)
SL	1.62	0.387	0.103	0.002	

MORE ↓

ENTER Averaging time for carcinogens, AT_C (yrs)	ENTER Averaging time for noncarcinogens, AT_{NC} (yrs)	ENTER Exposure duration, ED (yrs)	ENTER Exposure frequency, EF (days/yr)	ENTER Target risk for carcinogens, TR (unitless)	ENTER Target hazard quotient for noncarcinogens, THQ (unitless)
70	30	30	350	1.0E-05	1
				Used to calculate risk-based soil concentration.	

END

RESULTS SHEET

RISK-BASED SOIL CONCENTRATION CALCULATIONS:

Indoor exposure soil conc., carcinogen (µg/kg)	Indoor exposure soil conc., noncarcinogen (µg/kg)	Risk-based indoor exposure soil conc., (µg/kg)	Soil saturation conc., C_{sat} (µg/kg)	Final indoor exposure soil conc., (µg/kg)
NA	1.37E+04	1.37E+04	1.40E+05	1.37E+04

INCREMENTAL RISK CALCULATIONS:

Incremental risk from vapor intrusion to indoor air, carcinogen (unitless)	Hazard quotient from vapor intrusion to indoor air, noncarcinogen (unitless)
NA	NA

MESSAGE SUMMARY BELOW:
MESSAGE: The values of Csource and Cbuilding on the INTERCALCS worksheet are based on unity and do not represent actual values.

END

SL-SCREEN
Version 3.1; 02/04

Reset to Defaults

CALCULATE RISK-BASED SOIL CONCENTRATION (enter "X" in "YES" box)

YES [X]

OR

CALCULATE INCREMENTAL RISKS FROM ACTUAL SOIL CONCENTRATION (enter "X" in "YES" box and initial soil conc. below)

YES [ ]

ENTER Chemical CAS No. (numbers only, no dashes)	ENTER Initial soil conc., C_R (µg/kg)	Chemical
74873		Methyl chloride (chloromethane)

MORE ↓

ENTER Depth below grade to bottom of enclosed space floor, L_F (15 or 200 cm)	ENTER Depth below grade to top of contamination, L_t (cm)	ENTER Average soil temperature, T_S (°C)	ENTER Vadose zone SCS soil type (used to estimate soil vapor permeability)	OR	ENTER User-defined vadose zone soil vapor permeability, k_v (cm^2)
15	244	19	SL		

MORE ↓

ENTER Vandose zone SCS soil type (Lookup Soil Parameters)	ENTER Vadose zone soil dry bulk density, ρ_b^A (g/cm^3)	ENTER Vadose zone soil total porosity, n^V (unitless)	ENTER Vadose zone soil water-filled porosity, θ_w^V (cm^3/cm^3)	ENTER Vadose zone soil organic carbon fraction, f_{oc}^V (unitless)	ENTER Average vapor flow rate into bldg. (Leave blank to calculate) Q_{soil} (L/m)
SL	1.62	0.387	0.103	0.002	

MORE ↓

ENTER Averaging time for carcinogens, AT_C (yrs)	ENTER Averaging time for noncarcinogens, AT_{NC} (yrs)	ENTER Exposure duration, ED (yrs)	ENTER Exposure frequency, EF (days/yr)	ENTER Target risk for carcinogens, TR (unitless)	ENTER Target hazard quotient for noncarcinogens, THQ (unitless)
70	30	30	350	1.0E-06	1

Used to calculate risk-based soil concentration.

END

RESULTS SHEET

RISK-BASED SOIL CONCENTRATION CALCULATIONS:

Indoor exposure soil conc., carcinogen (µg/kg)	Indoor exposure soil conc., noncarcinogen (µg/kg)	Risk-based indoor exposure soil conc., (µg/kg)	Soil saturation conc., C_{sat} (µg/kg)	Final indoor exposure soil conc., (µg/kg)
3.30E+00	1.27E+02	3.30E+00	6.53E+05	3.30E+00

INCREMENTAL RISK CALCULATIONS:

Incremental risk from vapor intrusion to indoor air, carcinogen (unitless)	Hazard quotient from vapor intrusion to indoor air, noncarcinogen (unitless)
NA	NA

MESSAGE SUMMARY BELOW:
MESSAGE: The values of Csource and Cbuilding on the INTERCALCS worksheet are based on unity and do not represent actual values.

END

SL-SCREEN
Version 3.1; 02/04

Reset to Defaults

CALCULATE RISK-BASED SOIL CONCENTRATION (enter "X" in "YES" box)

YES [X]

OR

CALCULATE INCREMENTAL RISKS FROM ACTUAL SOIL CONCENTRATION (enter "X" in "YES" box and initial soil conc. below)

YES [ ]

ENTER Chemical CAS No. (numbers only, no dashes)	ENTER Initial soil conc., C_R (µg/kg)	Chemical
74873		Methyl chloride (chloromethane)

MORE ↓

ENTER Depth below grade to bottom of enclosed space floor, L_F (15 or 200 cm)	ENTER Depth below grade to top of contamination, L_t (cm)	ENTER Average soil temperature, T_S (°C)	ENTER Vadose zone SCS soil type (used to estimate soil vapor permeability)	OR	ENTER User-defined vadose zone soil vapor permeability, k_v (cm^2)
15	244	19	SL		

MORE ↓

ENTER Vandose zone SCS soil type (Lookup Soil Parameters)	ENTER Vadose zone soil dry bulk density, ρ_b^A (g/cm^3)	ENTER Vadose zone soil total porosity, n^V (unitless)	ENTER Vadose zone soil water-filled porosity, θ_w^V (cm^3/cm^3)	ENTER Vadose zone soil organic carbon fraction, f_{oc}^V (unitless)	ENTER Average vapor flow rate into bldg. (Leave blank to calculate) Q_{soil} (L/m)
SL	1.62	0.387	0.103	0.002	

MORE ↓

ENTER Averaging time for carcinogens, AT_C (yrs)	ENTER Averaging time for noncarcinogens, AT_{NC} (yrs)	ENTER Exposure duration, ED (yrs)	ENTER Exposure frequency, EF (days/yr)	ENTER Target risk for carcinogens, TR (unitless)	ENTER Target hazard quotient for noncarcinogens, THQ (unitless)
70	30	30	350	1.0E-05	1
				Used to calculate risk-based soil concentration.	

END

RESULTS SHEET

RISK-BASED SOIL CONCENTRATION CALCULATIONS:

Indoor exposure soil conc., carcinogen (µg/kg)	Indoor exposure soil conc., noncarcinogen (µg/kg)	Risk-based indoor exposure soil conc., (µg/kg)	Soil saturation conc., C_{sat} (µg/kg)	Final indoor exposure soil conc., (µg/kg)
3.30E+01	1.27E+02	3.30E+01	6.53E+05	3.30E+01

INCREMENTAL RISK CALCULATIONS:

Incremental risk from vapor intrusion to indoor air, carcinogen (unitless)	Hazard quotient from vapor intrusion to indoor air, noncarcinogen (unitless)
NA	NA

MESSAGE SUMMARY BELOW:
MESSAGE: The values of Csource and Cbuilding on the INTERCALCS worksheet are based on unity and do not represent actual values.

END

SL-SCREEN
Version 3.1; 02/04

Reset to Defaults

CALCULATE RISK-BASED SOIL CONCENTRATION (enter "X" in "YES" box)

YES [X]

OR

CALCULATE INCREMENTAL RISKS FROM ACTUAL SOIL CONCENTRATION (enter "X" in "YES" box and initial soil conc. below)

YES [ ]

ENTER Chemical CAS No. (numbers only, no dashes)	ENTER Initial soil conc., C_R (µg/kg)	Chemical
67641		Acetone

MORE ↓

ENTER Depth below grade to bottom of enclosed space floor, L_F (15 or 200 cm)	ENTER Depth below grade to top of contamination, L_t (cm)	ENTER Average soil temperature, T_S (°C)	ENTER Vadose zone SCS soil type (used to estimate soil vapor permeability)	OR	ENTER User-defined vadose zone soil vapor permeability, k_v (cm^2)
15	244	19	SL		

MORE ↓

ENTER Vandose zone SCS soil type (Lookup Soil Parameters)	ENTER Vadose zone soil dry bulk density, ρ_b^A (g/cm^3)	ENTER Vadose zone soil total porosity, n^V (unitless)	ENTER Vadose zone soil water-filled porosity, θ_w^V (cm^3/cm^3)	ENTER Vadose zone soil organic carbon fraction, f_{oc}^V (unitless)	ENTER Average vapor flow rate into bldg. (Leave blank to calculate) Q_{soil} (L/m)
SL	1.62	0.387	0.103	0.002	

MORE ↓

ENTER Averaging time for carcinogens, AT_C (yrs)	ENTER Averaging time for noncarcinogens, AT_{NC} (yrs)	ENTER Exposure duration, ED (yrs)	ENTER Exposure frequency, EF (days/yr)	ENTER Target risk for carcinogens, TR (unitless)	ENTER Target hazard quotient for noncarcinogens, THQ (unitless)
70	30	30	350	1.0E-06	1
				Used to calculate risk-based soil concentration.	

END

RESULTS SHEET

RISK-BASED SOIL CONCENTRATION CALCULATIONS:

Indoor exposure soil conc., carcinogen (µg/kg)	Indoor exposure soil conc., noncarcinogen (µg/kg)	Risk-based indoor exposure soil conc., (µg/kg)	Soil saturation conc., C_{sat} (µg/kg)	Final indoor exposure soil conc., (µg/kg)
NA	6.59E+04	6.59E+04	6.49E+07	6.59E+04

INCREMENTAL RISK CALCULATIONS:

Incremental risk from vapor intrusion to indoor air, carcinogen (unitless)	Hazard quotient from vapor intrusion to indoor air, noncarcinogen (unitless)
NA	NA

MESSAGE SUMMARY BELOW:
MESSAGE: The values of Csource and Cbuilding on the INTERCALCS worksheet are based on unity and do not represent actual values.

MESSAGE: Risk/HQ or risk-based soil concentration is based on a route-to-route extrapolation.

END

SL-SCREEN
Version 3.1; 02/04

Reset to Defaults

CALCULATE RISK-BASED SOIL CONCENTRATION (enter "X" in "YES" box)

YES [X]

OR

CALCULATE INCREMENTAL RISKS FROM ACTUAL SOIL CONCENTRATION (enter "X" in "YES" box and initial soil conc. below)

YES [ ]

ENTER Chemical CAS No. (numbers only, no dashes)	ENTER Initial soil conc., C_R (µg/kg)	Chemical
67641		Acetone

MORE ↓

ENTER Depth below grade to bottom of enclosed space floor, L_F (15 or 200 cm)	ENTER Depth below grade to top of contamination, L_t (cm)	ENTER Average soil temperature, T_S (°C)	ENTER Vadose zone SCS soil type (used to estimate soil vapor permeability)	OR	ENTER User-defined vadose zone soil vapor permeability, k_v (cm^2)
15	244	19	SL		

MORE ↓

ENTER Vandose zone SCS soil type (Lookup Soil Parameters)	ENTER Vadose zone soil dry bulk density, ρ_b^A (g/cm^3)	ENTER Vadose zone soil total porosity, n^V (unitless)	ENTER Vadose zone soil water-filled porosity, θ_w^V (cm^3/cm^3)	ENTER Vadose zone soil organic carbon fraction, f_{oc}^V (unitless)	ENTER Average vapor flow rate into bldg. (Leave blank to calculate) Q_{soil} (L/m)
SL	1.62	0.387	0.103	0.002	

MORE ↓

ENTER Averaging time for carcinogens, AT_C (yrs)	ENTER Averaging time for noncarcinogens, AT_{NC} (yrs)	ENTER Exposure duration, ED (yrs)	ENTER Exposure frequency, EF (days/yr)	ENTER Target risk for carcinogens, TR (unitless)	ENTER Target hazard quotient for noncarcinogens, THQ (unitless)
70	30	30	350	1.0E-05	1
				Used to calculate risk-based soil concentration.	

END

RESULTS SHEET

RISK-BASED SOIL CONCENTRATION CALCULATIONS:

Indoor exposure soil conc., carcinogen (µg/kg)	Indoor exposure soil conc., noncarcinogen (µg/kg)	Risk-based indoor exposure soil conc., (µg/kg)	Soil saturation conc., C_{sat} (µg/kg)	Final indoor exposure soil conc., (µg/kg)
NA	6.59E+04	6.59E+04	6.49E+07	6.59E+04

INCREMENTAL RISK CALCULATIONS:

Incremental risk from vapor intrusion to indoor air, carcinogen (unitless)	Hazard quotient from vapor intrusion to indoor air, noncarcinogen (unitless)
NA	NA

MESSAGE SUMMARY BELOW:
MESSAGE: The values of Csource and Cbuilding on the INTERCALCS worksheet are based on unity and do not represent actual values.

MESSAGE: Risk/HQ or risk-based soil concentration is based on a route-to-route extrapolation.

END

SL-SCREEN
Version 3.1; 02/04

Reset to Defaults

CALCULATE RISK-BASED SOIL CONCENTRATION (enter "X" in "YES" box)

YES [X]

OR

CALCULATE INCREMENTAL RISKS FROM ACTUAL SOIL CONCENTRATION (enter "X" in "YES" box and initial soil conc. below)

YES [ ]

ENTER Chemical CAS No. (numbers only, no dashes)	ENTER Initial soil conc., C_R (µg/kg)	Chemical
79005		1,1,2-Trichloroethane

MORE ↓

ENTER Depth below grade to bottom of enclosed space floor, L_F (15 or 200 cm)	ENTER Depth below grade to top of contamination, L_t (cm)	ENTER Average soil temperature, T_S (°C)	ENTER Vadose zone SCS soil type (used to estimate soil vapor permeability)	OR	ENTER User-defined vadose zone soil vapor permeability, k_v (cm^2)
15	244	19	SL		

MORE ↓

ENTER Vandose zone SCS soil type (Lookup Soil Parameters)	ENTER Vadose zone soil dry bulk density, ρ_b^A (g/cm^3)	ENTER Vadose zone soil total porosity, n^V (unitless)	ENTER Vadose zone soil water-filled porosity, θ_w^V (cm^3/cm^3)	ENTER Vadose zone soil organic carbon fraction, f_{oc}^V (unitless)	ENTER Average vapor flow rate into bldg. (Leave blank to calculate) Q_{soil} (L/m)
SIL	1.49	0.439	0.18	0.002	

MORE ↓

ENTER Averaging time for carcinogens, AT_C (yrs)	ENTER Averaging time for noncarcinogens, AT_{NC} (yrs)	ENTER Exposure duration, ED (yrs)	ENTER Exposure frequency, EF (days/yr)	ENTER Target risk for carcinogens, TR (unitless)	ENTER Target hazard quotient for noncarcinogens, THQ (unitless)
70	30	30	350	1.0E-06	1

Used to calculate risk-based soil concentration.

END

RESULTS SHEET

RISK-BASED SOIL CONCENTRATION CALCULATIONS:

Indoor exposure soil conc., carcinogen (µg/kg)	Indoor exposure soil conc., noncarcinogen (µg/kg)	Risk-based indoor exposure soil conc., (µg/kg)	Soil saturation conc., C_{sat} (µg/kg)	Final indoor exposure soil conc., (µg/kg)
5.61E+00	5.39E+02	5.61E+00	9.98E+05	5.61E+00

INCREMENTAL RISK CALCULATIONS:

Incremental risk from vapor intrusion to indoor air, carcinogen (unitless)	Hazard quotient from vapor intrusion to indoor air, noncarcinogen (unitless)
NA	NA

MESSAGE SUMMARY BELOW:
MESSAGE: The values of Csource and Cbuilding on the INTERCALCS worksheet are based on unity and do not represent actual values.

MESSAGE: Risk/HQ or risk-based soil concentration is based on a route-to-route extrapolation.

END

SL-SCREEN
Version 3.1; 02/04

Reset to Defaults

CALCULATE RISK-BASED SOIL CONCENTRATION (enter "X" in "YES" box)

YES [X]

OR

CALCULATE INCREMENTAL RISKS FROM ACTUAL SOIL CONCENTRATION (enter "X" in "YES" box and initial soil conc. below)

YES [ ]

ENTER Chemical CAS No. (numbers only, no dashes)	ENTER Initial soil conc., C_R (µg/kg)	Chemical
79005		1,1,2-Trichloroethane

MORE ↓

ENTER Depth below grade to bottom of enclosed space floor, L_F (15 or 200 cm)	ENTER Depth below grade to top of contamination, L_t (cm)	ENTER Average soil temperature, T_S (°C)	ENTER Vadose zone SCS soil type (used to estimate soil vapor permeability)	OR	ENTER User-defined vadose zone soil vapor permeability, k_v (cm^2)
15	244	19	SL		

MORE ↓

ENTER Vandose zone SCS soil type (Lookup Soil Parameters)	ENTER Vadose zone soil dry bulk density, ρ_b^A (g/cm^3)	ENTER Vadose zone soil total porosity, n^V (unitless)	ENTER Vadose zone soil water-filled porosity, θ_w^V (cm^3/cm^3)	ENTER Vadose zone soil organic carbon fraction, f_{oc}^V (unitless)	ENTER Average vapor flow rate into bldg. (Leave blank to calculate) Q_{soil} (L/m)
SIL	1.49	0.439	0.18	0.002	

MORE ↓

ENTER Averaging time for carcinogens, AT_C (yrs)	ENTER Averaging time for noncarcinogens, AT_{NC} (yrs)	ENTER Exposure duration, ED (yrs)	ENTER Exposure frequency, EF (days/yr)	ENTER Target risk for carcinogens, TR (unitless)	ENTER Target hazard quotient for noncarcinogens, THQ (unitless)
70	30	30	350	1.0E-05	1
				Used to calculate risk-based soil concentration.	

END

RESULTS SHEET

RISK-BASED SOIL CONCENTRATION CALCULATIONS:

Indoor exposure soil conc., carcinogen (µg/kg)	Indoor exposure soil conc., noncarcinogen (µg/kg)	Risk-based indoor exposure soil conc., (µg/kg)	Soil saturation conc., C_{sat} (µg/kg)	Final indoor exposure soil conc., (µg/kg)
5.61E+01	5.39E+02	5.61E+01	9.98E+05	5.61E+01

INCREMENTAL RISK CALCULATIONS:

Incremental risk from vapor intrusion to indoor air, carcinogen (unitless)	Hazard quotient from vapor intrusion to indoor air, noncarcinogen (unitless)
NA	NA

MESSAGE SUMMARY BELOW:
MESSAGE: The values of Csource and Cbuilding on the INTERCALCS worksheet are based on unity and do not represent actual values.

MESSAGE: Risk/HQ or risk-based soil concentration is based on a route-to-route extrapolation.

END

SL-SCREEN
Version 3.1; 02/04

Reset to Defaults

CALCULATE RISK-BASED SOIL CONCENTRATION (enter "X" in "YES" box)

YES: X

OR

CALCULATE INCREMENTAL RISKS FROM ACTUAL SOIL CONCENTRATION (enter "X" in "YES" box and initial soil conc. below)

YES:

ENTER Chemical CAS No. (numbers only, no dashes)	ENTER Initial soil conc., C_R (µg/kg)	Chemical
71556		1,1,1-Trichloroethane

MORE ↓

ENTER Depth below grade to bottom of enclosed space floor, L_F (15 or 200 cm)	ENTER Depth below grade to top of contamination, L_t (cm)	ENTER Average soil temperature, T_S (°C)	ENTER Vadose zone SCS soil type (used to estimate soil vapor permeability)	OR	ENTER User-defined vadose zone soil vapor permeability, k_v (cm^2)
15	244	19	SL		

MORE ↓

ENTER Vandose zone SCS soil type (Lookup Soil Parameters)	ENTER Vadose zone soil dry bulk density, ρ_b^A (g/cm^3)	ENTER Vadose zone soil total porosity, n^V (unitless)	ENTER Vadose zone soil water-filled porosity, θ_w^V (cm^3/cm^3)	ENTER Vadose zone soil organic carbon fraction, f_{oc}^V (unitless)	ENTER Average vapor flow rate into bldg. (Leave blank to calculate) Q_{soil} (L/m)
SL	1.62	0.387	0.103	0.002	

MORE ↓

ENTER Averaging time for carcinogens, AT_C (yrs)	ENTER Averaging time for noncarcinogens, AT_{NC} (yrs)	ENTER Exposure duration, ED (yrs)	ENTER Exposure frequency, EF (days/yr)	ENTER Target risk for carcinogens, TR (unitless)	ENTER Target hazard quotient for noncarcinogens, THQ (unitless)
70	30	30	350	1.0E-06	1
				Used to calculate risk-based soil concentration.	

END

RESULTS SHEET

RISK-BASED SOIL CONCENTRATION CALCULATIONS:

Indoor exposure soil conc., carcinogen (µg/kg)	Indoor exposure soil conc., noncarcinogen (µg/kg)	Risk-based indoor exposure soil conc., (µg/kg)	Soil saturation conc., C_{sat} (µg/kg)	Final indoor exposure soil conc., (µg/kg)
NA	5.81E+03	5.81E+03	5.06E+05	5.81E+03

INCREMENTAL RISK CALCULATIONS:

Incremental risk from vapor intrusion to indoor air, carcinogen (unitless)	Hazard quotient from vapor intrusion to indoor air, noncarcinogen (unitless)
NA	NA

MESSAGE SUMMARY BELOW:
MESSAGE: The values of Csource and Cbuilding on the INTERCALCS worksheet are based on unity and do not represent actual values.

END

SL-SCREEN
Version 3.1; 02/04

Reset to Defaults

CALCULATE RISK-BASED SOIL CONCENTRATION (enter "X" in "YES" box)

YES: X

OR

CALCULATE INCREMENTAL RISKS FROM ACTUAL SOIL CONCENTRATION (enter "X" in "YES" box and initial soil conc. below)

YES:

ENTER Chemical CAS No. (numbers only, no dashes)	ENTER Initial soil conc., C_R (µg/kg)	Chemical
71556		1,1,1-Trichloroethane

MORE ↓

ENTER Depth below grade to bottom of enclosed space floor, L_F (15 or 200 cm)	ENTER Depth below grade to top of contamination, L_t (cm)	ENTER Average soil temperature, T_S (°C)	ENTER Vadose zone SCS soil type (used to estimate soil vapor permeability)	OR	ENTER User-defined vadose zone soil vapor permeability, k_v (cm^2)
15	244	19	SL		

MORE ↓

ENTER Vandose zone SCS soil type (Lookup Soil Parameters)	ENTER Vadose zone soil dry bulk density, ρ_b^A (g/cm^3)	ENTER Vadose zone soil total porosity, n^V (unitless)	ENTER Vadose zone soil water-filled porosity, θ_w^V (cm^3/cm^3)	ENTER Vadose zone soil organic carbon fraction, f_{oc}^V (unitless)	ENTER Average vapor flow rate into bldg. (Leave blank to calculate) Q_{soil} (L/m)
SL	1.62	0.387	0.103	0.002	

MORE ↓

ENTER Averaging time for carcinogens, AT_C (yrs)	ENTER Averaging time for noncarcinogens, AT_{NC} (yrs)	ENTER Exposure duration, ED (yrs)	ENTER Exposure frequency, EF (days/yr)	ENTER Target risk for carcinogens, TR (unitless)	ENTER Target hazard quotient for noncarcinogens, THQ (unitless)
70	30	30	350	1.0E-05	1
				Used to calculate risk-based soil concentration.	

END

RESULTS SHEET

RISK-BASED SOIL CONCENTRATION CALCULATIONS:

Indoor exposure soil conc., carcinogen (µg/kg)	Indoor exposure soil conc., noncarcinogen (µg/kg)	Risk-based indoor exposure soil conc., (µg/kg)	Soil saturation conc., C_{sat} (µg/kg)	Final indoor exposure soil conc., (µg/kg)
NA	5.81E+03	5.81E+03	5.06E+05	5.81E+03

INCREMENTAL RISK CALCULATIONS:

Incremental risk from vapor intrusion to indoor air, carcinogen (unitless)	Hazard quotient from vapor intrusion to indoor air, noncarcinogen (unitless)
NA	NA

MESSAGE SUMMARY BELOW:
MESSAGE: The values of Csource and Cbuilding on the INTERCALCS worksheet are based on unity and do not represent actual values.

END

SL-SCREEN
Version 3.1; 02/04

Reset to Defaults

CALCULATE RISK-BASED SOIL CONCENTRATION (enter "X" in "YES" box)

YES [X]

OR

CALCULATE INCREMENTAL RISKS FROM ACTUAL SOIL CONCENTRATION (enter "X" in "YES" box and initial soil conc. below)

YES [ ]

ENTER Chemical CAS No. (numbers only, no dashes)	ENTER Initial soil conc., C_R (µg/kg)	Chemical
107062		1,2-Dichloroethane

MORE ↓

ENTER Depth below grade to bottom of enclosed space floor, L_F (15 or 200 cm)	ENTER Depth below grade to top of contamination, L_t (cm)	ENTER Average soil temperature, T_S (°C)	ENTER Vadose zone SCS soil type (used to estimate soil vapor permeability)	OR	ENTER User-defined vadose zone soil vapor permeability, k_v (cm^2)
15	244	19	SL		

MORE ↓

ENTER Vandose zone SCS soil type (Lookup Soil Parameters)	ENTER Vadose zone soil dry bulk density, ρ_b^A (g/cm^3)	ENTER Vadose zone soil total porosity, n^V (unitless)	ENTER Vadose zone soil water-filled porosity, θ_w^V (cm^3/cm^3)	ENTER Vadose zone soil organic carbon fraction, f_{oc}^V (unitless)	ENTER Average vapor flow rate into bldg. (Leave blank to calculate) Q_{soil} (L/m)
SL	1.62	0.387	0.103	0.002	

MORE ↓

ENTER Averaging time for carcinogens, AT_C (yrs)	ENTER Averaging time for noncarcinogens, AT_{NC} (yrs)	ENTER Exposure duration, ED (yrs)	ENTER Exposure frequency, EF (days/yr)	ENTER Target risk for carcinogens, TR (unitless)	ENTER Target hazard quotient for noncarcinogens, THQ (unitless)
70	30	30	350	1.0E-06	1
				Used to calculate risk-based soil concentration.	

END

RESULTS SHEET

RISK-BASED SOIL CONCENTRATION CALCULATIONS:

Indoor exposure soil conc., carcinogen (µg/kg)	Indoor exposure soil conc., noncarcinogen (µg/kg)	Risk-based indoor exposure soil conc., (µg/kg)	Soil saturation conc., C_{sat} (µg/kg)	Final indoor exposure soil conc., (µg/kg)
1.13E+00	NA	1.13E+00	8.84E+05	1.13E+00

INCREMENTAL RISK CALCULATIONS:

Incremental risk from vapor intrusion to indoor air, carcinogen (unitless)	Hazard quotient from vapor intrusion to indoor air, noncarcinogen (unitless)
NA	NA

MESSAGE SUMMARY BELOW:
MESSAGE: The values of Csource and Cbuilding on the INTERCALCS worksheet are based on unity and do not represent actual values.

END

SL-SCREEN
Version 3.1; 02/04

Reset to Defaults

CALCULATE RISK-BASED SOIL CONCENTRATION (enter "X" in "YES" box)

YES [X]

OR

CALCULATE INCREMENTAL RISKS FROM ACTUAL SOIL CONCENTRATION (enter "X" in "YES" box and initial soil conc. below)

YES [ ]

ENTER Chemical CAS No. (numbers only, no dashes)	ENTER Initial soil conc., C_R (µg/kg)	Chemical
107062		1,2-Dichloroethane

MORE ↓

ENTER Depth below grade to bottom of enclosed space floor, L_F (15 or 200 cm)	ENTER Depth below grade to top of contamination, L_t (cm)	ENTER Average soil temperature, T_S (°C)	ENTER Vadose zone SCS soil type (used to estimate soil vapor permeability)	OR	ENTER User-defined vadose zone soil vapor permeability, k_v (cm^2)
15	244	19	SL		

MORE ↓

ENTER Vandose zone SCS soil type (Lookup Soil Parameters)	ENTER Vadose zone soil dry bulk density, ρ_b^A (g/cm^3)	ENTER Vadose zone soil total porosity, n^V (unitless)	ENTER Vadose zone soil water-filled porosity, θ_w^V (cm^3/cm^3)	ENTER Vadose zone soil organic carbon fraction, f_{oc}^V (unitless)	ENTER Average vapor flow rate into bldg. (Leave blank to calculate) Q_{soil} (L/m)
SL	1.62	0.387	0.103	0.002	

MORE ↓

ENTER Averaging time for carcinogens, AT_C (yrs)	ENTER Averaging time for noncarcinogens, AT_{NC} (yrs)	ENTER Exposure duration, ED (yrs)	ENTER Exposure frequency, EF (days/yr)	ENTER Target risk for carcinogens, TR (unitless)	ENTER Target hazard quotient for noncarcinogens, THQ (unitless)
70	30	30	350	1.0E-05	1
				Used to calculate risk-based soil concentration.	

END

RESULTS SHEET

RISK-BASED SOIL CONCENTRATION CALCULATIONS:

Indoor exposure soil conc., carcinogen (µg/kg)	Indoor exposure soil conc., noncarcinogen (µg/kg)	Risk-based indoor exposure soil conc., (µg/kg)	Soil saturation conc., C_{sat} (µg/kg)	Final indoor exposure soil conc., (µg/kg)
1.13E+01	NA	1.13E+01	8.84E+05	1.13E+01

INCREMENTAL RISK CALCULATIONS:

Incremental risk from vapor intrusion to indoor air, carcinogen (unitless)	Hazard quotient from vapor intrusion to indoor air, noncarcinogen (unitless)
NA	NA

MESSAGE SUMMARY BELOW:
MESSAGE: The values of Csource and Cbuilding on the INTERCALCS worksheet are based on unity and do not represent actual values.

END

SL-SCREEN
Version 3.1; 02/04

Reset to Defaults

CALCULATE RISK-BASED SOIL CONCENTRATION (enter "X" in "YES" box)

YES [X]

OR

CALCULATE INCREMENTAL RISKS FROM ACTUAL SOIL CONCENTRATION (enter "X" in "YES" box and initial soil conc. below)

YES [ ]

ENTER Chemical CAS No. (numbers only, no dashes)	ENTER Initial soil conc., C_R (µg/kg)	Chemical
75354		1,1-Dichloroethylene

MORE ↓

ENTER Depth below grade to bottom of enclosed space floor, L_F (15 or 200 cm)	ENTER Depth below grade to top of contamination, L_t (cm)	ENTER Average soil temperature, T_S (°C)	ENTER Vadose zone SCS soil type (used to estimate soil vapor permeability)	OR	ENTER User-defined vadose zone soil vapor permeability, k_v (cm^2)
15	244	19	SL		

MORE ↓

ENTER Vandose zone SCS soil type (Lookup Soil Parameters)	ENTER Vadose zone soil dry bulk density, ρ_b^A (g/cm^3)	ENTER Vadose zone soil total porosity, n^V (unitless)	ENTER Vadose zone soil water-filled porosity, θ_w^V (cm^3/cm^3)	ENTER Vadose zone soil organic carbon fraction, f_{oc}^V (unitless)	ENTER Average vapor flow rate into bldg. (Leave blank to calculate) Q_{soil} (L/m)
SL	1.62	0.387	0.103	0.002	

MORE ↓

ENTER Averaging time for carcinogens, AT_C (yrs)	ENTER Averaging time for noncarcinogens, AT_{NC} (yrs)	ENTER Exposure duration, ED (yrs)	ENTER Exposure frequency, EF (days/yr)	ENTER Target risk for carcinogens, TR (unitless)	ENTER Target hazard quotient for noncarcinogens, THQ (unitless)
70	30	30	350	1.0E-06	1
				Used to calculate risk-based soil concentration.	

END

RESULTS SHEET

RISK-BASED SOIL CONCENTRATION CALCULATIONS:

Indoor exposure soil conc., carcinogen (µg/kg)	Indoor exposure soil conc., noncarcinogen (µg/kg)	Risk-based indoor exposure soil conc., (µg/kg)	Soil saturation conc., C_{sat} (µg/kg)	Final indoor exposure soil conc., (µg/kg)
NA	2.87E+02	2.87E+02	7.52E+05	2.87E+02

INCREMENTAL RISK CALCULATIONS:

Incremental risk from vapor intrusion to indoor air, carcinogen (unitless)	Hazard quotient from vapor intrusion to indoor air, noncarcinogen (unitless)
NA	NA

MESSAGE SUMMARY BELOW:
MESSAGE: The values of Csource and Cbuilding on the INTERCALCS worksheet are based on unity and do not represent actual values.

END

SL-SCREEN
Version 3.1; 02/04

Reset to Defaults

CALCULATE RISK-BASED SOIL CONCENTRATION (enter "X" in "YES" box)

YES [X]

OR

CALCULATE INCREMENTAL RISKS FROM ACTUAL SOIL CONCENTRATION (enter "X" in "YES" box and initial soil conc. below)

YES [ ]

ENTER Chemical CAS No. (numbers only, no dashes)	ENTER Initial soil conc., C_R (µg/kg)	Chemical
75354		1,1-Dichloroethylene

MORE ↓

ENTER Depth below grade to bottom of enclosed space floor, L_F (15 or 200 cm)	ENTER Depth below grade to top of contamination, L_t (cm)	ENTER Average soil temperature, T_S (°C)	ENTER Vadose zone SCS soil type (used to estimate soil vapor permeability)	OR	ENTER User-defined vadose zone soil vapor permeability, k_v (cm^2)
15	244	19	SL		

MORE ↓

ENTER Vandose zone SCS soil type (Lookup Soil Parameters)	ENTER Vadose zone soil dry bulk density, ρ_b^A (g/cm^3)	ENTER Vadose zone soil total porosity, n^V (unitless)	ENTER Vadose zone soil water-filled porosity, θ_w^V (cm^3/cm^3)	ENTER Vadose zone soil organic carbon fraction, f_{oc}^V (unitless)	ENTER Average vapor flow rate into bldg. (Leave blank to calculate) Q_{soil} (L/m)
SL	1.62	0.387	0.103	0.002	

MORE ↓

ENTER Averaging time for carcinogens, AT_C (yrs)	ENTER Averaging time for noncarcinogens, AT_{NC} (yrs)	ENTER Exposure duration, ED (yrs)	ENTER Exposure frequency, EF (days/yr)	ENTER Target risk for carcinogens, TR (unitless)	ENTER Target hazard quotient for noncarcinogens, THQ (unitless)
70	30	30	350	1.0E-05	1
				Used to calculate risk-based soil concentration.	

END

RESULTS SHEET

RISK-BASED SOIL CONCENTRATION CALCULATIONS:

Indoor exposure soil conc., carcinogen (µg/kg)	Indoor exposure soil conc., noncarcinogen (µg/kg)	Risk-based indoor exposure soil conc., (µg/kg)	Soil saturation conc., C_{sat} (µg/kg)	Final indoor exposure soil conc., (µg/kg)
NA	2.87E+02	2.87E+02	7.52E+05	2.87E+02

INCREMENTAL RISK CALCULATIONS:

Incremental risk from vapor intrusion to indoor air, carcinogen (unitless)	Hazard quotient from vapor intrusion to indoor air, noncarcinogen (unitless)
NA	NA

MESSAGE SUMMARY BELOW:
MESSAGE: The values of Csource and Cbuilding on the INTERCALCS worksheet are based on unity and do not represent actual values.

END

SL-SCREEN
Version 3.1; 02/04

Reset to Defaults

CALCULATE RISK-BASED SOIL CONCENTRATION (enter "X" in "YES" box)

YES [X]

OR

CALCULATE INCREMENTAL RISKS FROM ACTUAL SOIL CONCENTRATION (enter "X" in "YES" box and initial soil conc. below)

YES [ ]

ENTER Chemical CAS No. (numbers only, no dashes)	ENTER Initial soil conc., C_R (µg/kg)	Chemical
75343		1,1-Dichloroethane

MORE ↓

ENTER Depth below grade to bottom of enclosed space floor, L_F (15 or 200 cm)	ENTER Depth below grade to top of contamination, L_t (cm)	ENTER Average soil temperature, T_S (°C)	ENTER Vadose zone SCS soil type (used to estimate soil vapor permeability)	OR	ENTER User-defined vadose zone soil vapor permeability, k_v (cm^2)
15	244	19	SL		

MORE ↓

ENTER Vandose zone SCS soil type (Lookup Soil Parameters)	ENTER Vadose zone soil dry bulk density, ρ_b^A (g/cm^3)	ENTER Vadose zone soil total porosity, n^V (unitless)	ENTER Vadose zone soil water-filled porosity, θ_w^V (cm^3/cm^3)	ENTER Vadose zone soil organic carbon fraction, f_{oc}^V (unitless)	ENTER Average vapor flow rate into bldg. (Leave blank to calculate) Q_{soil} (L/m)
SL	1.62	0.387	0.103	0.002	

MORE ↓

ENTER Averaging time for carcinogens, AT_C (yrs)	ENTER Averaging time for noncarcinogens, AT_{NC} (yrs)	ENTER Exposure duration, ED (yrs)	ENTER Exposure frequency, EF (days/yr)	ENTER Target risk for carcinogens, TR (unitless)	ENTER Target hazard quotient for noncarcinogens, THQ (unitless)
70	30	30	350	1.0E-06	1
				Used to calculate risk-based soil concentration.	

END

RESULTS SHEET

RISK-BASED SOIL CONCENTRATION CALCULATIONS:

Indoor exposure soil conc., carcinogen (µg/kg)	Indoor exposure soil conc., noncarcinogen (µg/kg)	Risk-based indoor exposure soil conc., (µg/kg)	Soil saturation conc., C_{sat} (µg/kg)	Final indoor exposure soil conc., (µg/kg)
NA	1.68E+03	1.68E+03	8.02E+05	1.68E+03

INCREMENTAL RISK CALCULATIONS:

Incremental risk from vapor intrusion to indoor air, carcinogen (unitless)	Hazard quotient from vapor intrusion to indoor air, noncarcinogen (unitless)
NA	NA

MESSAGE SUMMARY BELOW:
MESSAGE: The values of Csource and Cbuilding on the INTERCALCS worksheet are based on unity and do not represent actual values.

END

SL-SCREEN
Version 3.1; 02/04

Reset to Defaults

CALCULATE RISK-BASED SOIL CONCENTRATION (enter "X" in "YES" box)

YES: X

OR

CALCULATE INCREMENTAL RISKS FROM ACTUAL SOIL CONCENTRATION (enter "X" in "YES" box and initial soil conc. below)

YES:

ENTER Chemical CAS No. (numbers only, no dashes)	ENTER Initial soil conc., C_R (µg/kg)	Chemical
75343		1,1-Dichloroethane

MORE ↓

ENTER Depth below grade to bottom of enclosed space floor, L_F (15 or 200 cm)	ENTER Depth below grade to top of contamination, L_t (cm)	ENTER Average soil temperature, T_S (°C)	ENTER Vadose zone SCS soil type (used to estimate soil vapor permeability)	OR	ENTER User-defined vadose zone soil vapor permeability, k_v (cm^2)
15	244	19	SL		

MORE ↓

ENTER Vandose zone SCS soil type (Lookup Soil Parameters)	ENTER Vadose zone soil dry bulk density, ρ_b^A (g/cm^3)	ENTER Vadose zone soil total porosity, n^V (unitless)	ENTER Vadose zone soil water-filled porosity, θ_w^V (cm^3/cm^3)	ENTER Vadose zone soil organic carbon fraction, f_{oc}^V (unitless)	ENTER Average vapor flow rate into bldg. (Leave blank to calculate) Q_{soil} (L/m)
SL	1.62	0.387	0.103	0.002	

MORE ↓

ENTER Averaging time for carcinogens, AT_C (yrs)	ENTER Averaging time for noncarcinogens, AT_{NC} (yrs)	ENTER Exposure duration, ED (yrs)	ENTER Exposure frequency, EF (days/yr)	ENTER Target risk for carcinogens, TR (unitless)	ENTER Target hazard quotient for noncarcinogens, THQ (unitless)
70	30	30	350	1.0E-05	1
				Used to calculate risk-based soil concentration.	

END

RESULTS SHEET

RISK-BASED SOIL CONCENTRATION CALCULATIONS:

Indoor exposure soil conc., carcinogen (µg/kg)	Indoor exposure soil conc., noncarcinogen (µg/kg)	Risk-based indoor exposure soil conc., (µg/kg)	Soil saturation conc., C_{sat} (µg/kg)	Final indoor exposure soil conc., (µg/kg)
NA	1.68E+03	1.68E+03	8.02E+05	1.68E+03

INCREMENTAL RISK CALCULATIONS:

Incremental risk from vapor intrusion to indoor air, carcinogen (unitless)	Hazard quotient from vapor intrusion to indoor air, noncarcinogen (unitless)
NA	NA

MESSAGE SUMMARY BELOW:
MESSAGE: The values of Csource and Cbuilding on the INTERCALCS worksheet are based on unity and do not represent actual values.

END

Southeast ACCUTEST LABORATORIES

12/09/10

Technical Report for

Tetra Tech, Inc

Holloman AFB; Alamogordo, NM

100-TEN-T93002-1

Accutest Job Number: F78009

Sampling Dates: 11/10/10 - 11/11/10

Report to:

Tetra Tech
800 Oak Ridge Tpk. Suite A600
Oak Ridge, TN 37830
Jeremy.Bennett@tetratech.com

ATTN: Jeremy Bennett

Total number of pages in report: **649**

ACCREDITED IN ACCORDANCE WITH nelac

Test results contained within this data package meet the requirements of the National Environmental Laboratory Accreditation Conference and/or state specific certification programs as applicable.

Harry Behzadi, Ph.D.
Laboratory Director

Client Service contact: Sue Bell 407-425-6700

Certifications: FL (DOH E83510), NC (573), NJ (FL002), MA (FL946), IA (366), LA (03051), KS (E-10327), SC, AK

This report shall not be reproduced, except in its entirety, without the written approval of Accutest Laboratories.

Test results relate only to samples analyzed.

Accutest Laboratories is the sole authority for authorizing edits or modifications to this document. Unauthorized modification of this report is strictly prohibited.

Table of Contents

-1-

Section 1: Sample Summary 5
Section 2: Case Narrative/Conformance Summary 9
Section 3: Sample Results 15
3.1: F78009-1: SS39-DPT-05A 16
3.2: F78009-2: SS39-DPT-05B 20
3.3: F78009-3: SS39-DPT-05C 24
3.4: F78009-4: SS39-DPT-06A 28
3.5: F78009-5: SS39-DPT-06B 32
3.6: F78009-6: SS39-DPT-06C 36
3.7: F78009-7: SS39-DPT-07A 40
3.8: F78009-8: SS39-DPT-07B 44
3.9: F78009-9: SS39-DPT-07C 48
3.10: F78009-10: SS39-DPT-08A 52
3.11: F78009-11: SS39-DPT-08B 56
3.12: F78009-12: SS39-DPT-08C 60
3.13: F78009-13: SS39-DPT-09A 64
3.14: F78009-14: SS39-DPT-09B 68
3.15: F78009-15: SS39-DPT-09C 72
3.16: F78009-16: SS39-DPT-10A 76
3.17: F78009-17: SS39-DPT-10B 80
3.18: F78009-18: SS39-DPT-10C 84
3.19: F78009-19: SS39-DPT-11A 88
3.20: F78009-20: SS39-DPT-11B 92
3.21: F78009-21: SS39-DPT-11C 96
3.22: F78009-22: SS39-DPT-12A 100
3.23: F78009-23: SS39-DPT-12B 104
3.24: F78009-24: SS39-DPT-12C 108
3.25: F78009-25: SS39-DPT-13A 112
3.26: F78009-26: SS39-DPT-13B 116
3.27: F78009-27: SS39-DPT-13C 120
3.28: F78009-28: SS39-DPT-14A 124
3.29: F78009-29: SS39-DPT-14B 128
3.30: F78009-30: SS39-DPT-14C 132
3.31: F78009-31: SS39-DPT-DUP01 136
3.32: F78009-32: SS39-DPT-DUP02 140
3.33: F78009-33: SS39-DPT-DUP03 144
3.34: F78009-34: SS39-TB-11112010-A 148
3.35: F78009-35: SS39-TB-11112010-B 152
3.36: F78009-36: SD27-TTMW-05 156
3.37: F78009-36F: SD27-TTMW-05 166
3.38: F78009-37: SD27-TTMW-01 167
3.39: F78009-37F: SD27-TTMW-01 177

Table of Contents

3.40: F78009-38: SD27-TB-11112010-C 178
3.41: F78009-39: SD27-TB-11112010-D 182
Section 4: Misc. Forms 186
4.1: Certification Exceptions 187
4.2: Chain of Custody 188
Section 5: GC/MS Volatiles - QC Data Summaries 190
5.1: Method Blank Summary 191
5.2: Blank Spike Summary 215
5.3: Matrix Spike/Matrix Spike Duplicate Summary 239
5.4: Instrument Performance Checks (BFB) 263
5.5: Internal Standard Area Summaries 278
5.6: Surrogate Recovery Summaries 287
5.7: Initial and Continuing Calibration Summaries 290
Section 6: GC/MS Semi-volatiles - QC Data Summaries 350
6.1: Method Blank Summary 351
6.2: Blank Spike Summary 363
6.3: Matrix Spike/Matrix Spike Duplicate Summary 369
6.4: Instrument Performance Checks (DFTPP) 372
6.5: Internal Standard Area Summaries 382
6.6: Surrogate Recovery Summaries 387
6.7: Initial and Continuing Calibration Summaries 388
Section 7: GC Volatiles - QC Data Summaries 441
7.1: Method Blank Summary 442
7.2: Blank Spike Summary 448
7.3: Matrix Spike/Matrix Spike Duplicate Summary 454
7.4: Duplicate Summary 460
7.5: Surrogate Recovery Summaries 461
7.6: GC Surrogate Retention Time Summaries 464
7.7: Initial and Continuing Calibration Summaries 479
Section 8: GC Semi-volatiles - QC Data Summaries 507
8.1: Method Blank Summary 508
8.2: Blank Spike Summary 509
8.3: Matrix Spike/Matrix Spike Duplicate Summary 510
8.4: Surrogate Recovery Summaries 511
8.5: GC Surrogate Retention Time Summaries 512
8.6: Initial and Continuing Calibration Summaries 514
Section 9: Metals Analysis - QC Data Summaries 520
9.1: Inst QC MA8520: Hg 521
9.2: Inst QC MA8526: As,Ba,Cd,Cr,Pb,Se,Ag 531
9.3: Inst QC MA8530: As,Ba,Cd,Cr,Pb,Se,Ag 555
9.4: Inst QC MA8534: As,Cd,Cr,Pb,Se 588
9.5: Prep QC MP19507: Hg 619

Table of Contents

9.6: Prep QC MP19508: Hg 624
9.7: Prep QC MP19523: As,Ba,Cd,Cr,Pb,Se,Ag 629
9.8: Prep QC MP19535: As,Ba,Cd,Cr,Pb,Se,Ag 635
Section 10: General Chemistry - QC Data Summaries 641
10.1: Method Blank and Spike Results Summary 642
10.2: Duplicate Results Summary 643
10.3: Percent Solids Raw Data Summary 644

Sample Summary

Tetra Tech, Inc

Job No: F78009

Holloman AFB; Alamogordo, NM
Project No: 100-TEN-T93002-1

Sample Number	Collected Date	Time	By	Received	Matrix Code	Type	Client Sample ID
F78009-1	11/10/10	16:55	JD	11/12/10	SO	Soil	SS39-DPT-05A
F78009-2	11/10/10	17:00	JD	11/12/10	SO	Soil	SS39-DPT-05B
F78009-3	11/10/10	17:05	JD	11/12/10	SO	Soil	SS39-DPT-05C
F78009-4	11/10/10	17:35	JD	11/12/10	SO	Soil	SS39-DPT-06A
F78009-5	11/10/10	17:40	JD	11/12/10	SO	Soil	SS39-DPT-06B
F78009-6	11/10/10	17:45	JD	11/12/10	SO	Soil	SS39-DPT-06C
F78009-7	11/11/10	07:50	JD	11/12/10	SO	Soil	SS39-DPT-07A
F78009-8	11/11/10	07:55	JD	11/12/10	SO	Soil	SS39-DPT-07B
F78009-9	11/11/10	08:00	JD	11/12/10	SO	Soil	SS39-DPT-07C
F78009-10	11/11/10	08:25	JD	11/12/10	SO	Soil	SS39-DPT-08A
F78009-11	11/11/10	08:30	JD	11/12/10	SO	Soil	SS39-DPT-08B
F78009-12	11/11/10	08:35	JD	11/12/10	SO	Soil	SS39-DPT-08C
F78009-13	11/11/10	08:50	JD	11/12/10	SO	Soil	SS39-DPT-09A

Soil samples reported on a dry weight basis unless otherwise indicated on result page.

Sample Summary
(continued)

Tetra Tech, Inc

Job No: F78009

Holloman AFB; Alamogordo, NM
Project No: 100-TEN-T93002-1

Sample Number	Collected Date	Time	By	Received	Matrix Code	Type	Client Sample ID
F78009-14	11/11/10	08:55	JD	11/12/10	SO	Soil	SS39-DPT-09B
F78009-15	11/11/10	09:00	JD	11/12/10	SO	Soil	SS39-DPT-09C
F78009-16	11/11/10	09:05	JD	11/12/10	SO	Soil	SS39-DPT-10A
F78009-17	11/11/10	09:10	JD	11/12/10	SO	Soil	SS39-DPT-10B
F78009-18	11/11/10	09:15	JD	11/12/10	SO	Soil	SS39-DPT-10C
F78009-19	11/11/10	10:00	JD	11/12/10	SO	Soil	SS39-DPT-11A
F78009-20	11/11/10	10:05	JD	11/12/10	SO	Soil	SS39-DPT-11B
F78009-21	11/11/10	10:10	JD	11/12/10	SO	Soil	SS39-DPT-11C
F78009-22	11/11/10	10:15	JD	11/12/10	SO	Soil	SS39-DPT-12A
F78009-23	11/11/10	10:20	JD	11/12/10	SO	Soil	SS39-DPT-12B
F78009-24	11/11/10	10:25	JD	11/12/10	SO	Soil	SS39-DPT-12C
F78009-24D	11/11/10	10:25	JD	11/12/10	SO	Soil Dup/MSD	SS39-DPT-12C
F78009-24S	11/11/10	10:25	JD	11/12/10	SO	Soil Matrix Spike	SS39-DPT-12C

Soil samples reported on a dry weight basis unless otherwise indicated on result page.

Accutest Laboratories

Sample Summary
(continued)

Tetra Tech, Inc

Job No: F78009

Holloman AFB; Alamogordo, NM
Project No: 100-TEN-T93002-1

Sample Number	Collected Date	Time	By	Received	Matrix Code	Type	Client Sample ID
F78009-25	11/11/10	10:40	JD	11/12/10	SO	Soil	SS39-DPT-13A
F78009-26	11/11/10	10:45	JD	11/12/10	SO	Soil	SS39-DPT-13B
F78009-27	11/11/10	10:50	JD	11/12/10	SO	Soil	SS39-DPT-13C
F78009-28	11/11/10	11:00	JD	11/12/10	SO	Soil	SS39-DPT-14A
F78009-29	11/11/10	11:05	JD	11/12/10	SO	Soil	SS39-DPT-14B
F78009-30	11/11/10	11:10	JD	11/12/10	SO	Soil	SS39-DPT-14C
F78009-31	11/11/10	08:00	JD	11/12/10	SO	Soil	SS39-DPT-DUP01
F78009-32	11/11/10	09:15	JD	11/12/10	SO	Soil	SS39-DPT-DUP02
F78009-33	11/11/10	11:00	JD	11/12/10	SO	Soil	SS39-DPT-DUP03
F78009-34	11/11/10	12:30	JD	11/12/10	SO	Trip Blank Soil	SS39-TB-11112010-A
F78009-35	11/11/10	12:30	JD	11/12/10	SO	Trip Blank Soil	SS39-TB-11112010-B
F78009-36	11/11/10	08:50	JD	11/12/10	AQ	Ground Water	SD27-TTMW-05
F78009-36F	11/11/10	08:50	JD	11/12/10	AQ	Groundwater Filtered	SD27-TTMW-05

Soil samples reported on a dry weight basis unless otherwise indicated on result page.

Accutest Laboratories

Sample Summary
(continued)

Tetra Tech, Inc

Job No: F78009

Holloman AFB; Alamogordo, NM
Project No: 100-TEN-T93002-1

Sample Number	Collected Date	Time	By	Received	Matrix Code	Type	Client Sample ID
F78009-37	11/11/10	10:05	JD	11/12/10	AQ	Ground Water	SD27-TTMW-01
F78009-37D	11/11/10	10:05	JD	11/12/10	AQ	Water Dup/MSD	SD27-TTMW-01
F78009-37DF	11/11/10	10:05	JD	11/12/10	AQ	Water Dup/MSD	SD27-TTMW-01
F78009-37F	11/11/10	10:05	JD	11/12/10	AQ	Groundwater Filtered	SD27-TTMW-01
F78009-37S	11/11/10	10:05	JD	11/12/10	AQ	Water Matrix Spike	SD27-TTMW-01
F78009-37SF	11/11/10	10:05	JD	11/12/10	AQ	Water Matrix Spike	SD27-TTMW-01
F78009-38	11/11/10	00:00	JD	11/12/10	AQ	Trip Blank Water	SD27-TB-11112010-C
F78009-39	11/11/10	00:00	JD	11/12/10	AQ	Trip Blank Water	SD27-TB-11112010-D

Soil samples reported on a dry weight basis unless otherwise indicated on result page.

SAMPLE DELIVERY GROUP CASE NARRATIVE

Client: Tetra Tech, Inc **Job** F78009

Site: Holloman AFB; Alamogordo, NM **Report Date:** 12/7/2010 4:50:40 PM

35 Samples and 4 Trip Blanks were collected on 11/10/2010 and 11/11/2010 and were received at Accutest SE on 11/12/2010 properly preserved, at 3.8 Deg. C and intact. These Samples received an Accutest job number of F78009. A listing of the Laboratory Sample ID, Client Sample ID and dates of collection are presented in the Results Summary Section of this report.

Except as noted below, all method specified calibrations and quality control performance criteria were met for this job. For more information, please refer to QC summary pages.

Volatiles by GCMS by Method SW846 8260B

Matrix: AQ **Batch ID:** VF1348

All samples were analyzed within the recommended method holding time.

Samples F78101-29MS, F78101-29MSD were used as the QC samples indicated.

All method blanks for this batch meet method specific criteria.

Samples F78009-38, F78009-39 have compound(s) reported with a “B” qualifier, indicating analyte is found in the associated method blank.

Blank Spike Recoverys for Acetone, cis-1,4-Dichloro-2-Butene, Trans-1,4-Dichloro-2-Butene are outside control limits.

Matrix Spike Recoverys for 1,2,3-Trichloropropane, Acetone, Methyl ethyl ketone, Propionitrile, cis-1,2-Dichloroethylene are outside control limits. Outside control limits due to high level in sample relative to spike amount.

Matrix Spike Duplicate Recoverys for Acetone, Acetonitrile, cis-1,4-Dichloro-2-Butene are outside control limits. Probable cause due to matrix interference.

RPDs for MSD for 1,1,1-Trichloroethane, 1,1-Dichloroethane, 1,1-Dichloroethylene, 1,2,3-Trichloropropane, 1,2-Dibromo-3-chloropropane, 1,2-Dibromoethane, 2-Hexanone, 4-Methyl-2-pentanone, Acetone, Acetonitrile, Acrylonitrile, Benzyl Chloride, Carbon disulfide, cis-1,2-Dichloroethylene, Ethyl methacrylate, Freon 113, Methyl ethyl ketone, Methyl methacrylate, Naphthalene, Propionitrile are outside control limits for sample F78101-29MSD. Probable cause due to sample non-homogeneity.

Samples F78009-24, F78009-28, F78009-26, F78009-30, F78009-31, F78009-29, F78009-32, F78009-25, F78009-27 have surrogates outside control limits. Confirmation run for surrogate recoveries.

F78009-38, F78009-39: No sample available for reanalysis.

F78009-38, F78009-39 for Methylene chloride: Suspected laboratory contaminant.

F78009-38, F78009-39 for Acetone: Associated BS and ICV recovery outside control limits.

F78009-38, F78009-39 for Vinyl chloride: ICV outside of control limits.

Matrix: AQ **Batch ID:** VF1350

All samples were analyzed within the recommended method holding time.

All method blanks for this batch meet method specific criteria.

Samples F78009-37MS, F78009-37MSD were used as the QC samples indicated.

Sample F78009-37 has compound(s) reported with a “B” qualifier, indicating analyte is found in the associated method blank.

Matrix Spike Recoverys for 2-Chloroethyl vinyl ether, 4-Methyl-2-pentanone, Acetone, n-Butylbenzene are outside control limits. Probable cause due to matrix interference.

Matrix Spike Duplicate Recoverys for 2-Chloroethyl vinyl ether, 4-Methyl-2-pentanone, Acetone are outside control limits. Probable cause due to matrix interference.

RPDs for MSD for n-Butylbenzene, Trichlorofluoromethane are outside control limits for sample F78009-37MSD. Probable cause due to sample non-homogeneity.

Samples F78009-24, F78009-28, F78009-26, F78009-30, F78009-31, F78009-29, F78009-32, F78009-25, F78009-27 have surrogates outside control limits. Confirmation run for surrogate recoveries.

Matrix: AQ **Batch ID:** VF1353

Samples F78210-7MS, F78210-7MSD were used as the QC samples indicated.

All method blanks for this batch meet method specific criteria.

Volatiles by GCMS by Method SW846 8260B

Matrix: AQ **Batch ID:** VF1353

The following samples were run outside of holding time for method SW846 8260B: F78009-36. Sample analyzed beyond hold time; reported results are considered minimum values.

Matrix Spike Recoverys for 2-Chloroethyl vinyl ether, Acetone, Acetonitrile are outside control limits. Probable cause due to matrix interference.

Matrix Spike Duplicate Recoverys for 2-Chloroethyl vinyl ether, Acetone, Carbon disulfide are outside control limits. Probable cause due to matrix interference.

RPDs for MSD for Acetonitrile, Freon 113 are outside control limits for sample F78210-7MSD. Probable cause due to sample non-homogeneity.

Samples F78009-24, F78009-28, F78009-26, F78009-30, F78009-31, F78009-29, F78009-32, F78009-25, F78009-27 have surrogates outside control limits. Confirmation run for surrogate recoveries.

F78009-36: Sample analyzed beyond hold time; reported results are considered minimum values.

Matrix: SO **Batch ID:** VG2581

All samples were analyzed within the recommended method holding time.

All method blanks for this batch meet method specific criteria.

Samples F78038-3MS, F78038-3MSD were used as the QC samples indicated.

Blank Spike Recoverys for 2-Hexanone, Acetone, Methyl bromide, Methylene chloride are outside control limits.

Matrix Spike Recoverys for 1,1,2-Trichloroethane, 1,2-Dibromo-3-chloropropane, 1,3-Dichloropropane, 1-Chlorohexane, 2-Hexanone, 4-Methyl-2-pentanone, Acetone, Acetonitrile, Benzyl Chloride, Ethyl methacrylate, Methyl bromide, Methyl ethyl ketone, Methylene chloride, Propionitrile, trans-1,3-Dichloropropene, Trans-1,4-Dichloro-2-Butene are outside control limits. Probable cause due to matrix interference.

Matrix Spike Duplicate Recoverys for 2-Hexanone, 4-Methyl-2-pentanone, Acetone, Acetonitrile, Benzyl Chloride, Chloroethane, Methyl bromide, Methyl ethyl ketone, Methylene chloride, Propionitrile, trans-1,3-Dichloropropene are outside control limits. Probable cause due to matrix interference.

Samples F78009-24, F78009-28, F78009-26, F78009-30, F78009-31, F78009-29, F78009-32, F78009-25, F78009-27 have surrogates outside control limits. Confirmation run for surrogate recoveries.

F78009-1 for Methylene chloride: BS outside of control limits; results may be biased high; suspected laboratory

Matrix: SO **Batch ID:** VG2582

All samples were analyzed within the recommended method holding time.

Samples F78104-1MS, F78104-1MSD were used as the QC samples indicated.

All method blanks for this batch meet method specific criteria.

Samples F78009-33, F78009-35 have compound(s) reported with a “B” qualifier, indicating analyte is found in the associated method blank.

Blank Spike Recoverys for 1-Chlorohexane, 2-Hexanone, Acetone, Methyl bromide, Methyl ethyl ketone, Propionitrile are outside control limits.

Matrix Spike Recoverys for 1,2,3-Trichlorobenzene, 1,2,4-Trichlorobenzene, 1-Chlorohexane, 2-Hexanone, Acetone, Benzyl Chloride, Ethyl methacrylate, Hexachlorobutadiene, Methyl ethyl ketone, Methylene chloride, Propionitrile, Trans-1,4-Dichloro-2-Butene are outside control limits. Probable cause due to matrix interference.

Matrix Spike Duplicate Recoverys for 1,1,2-Trichloroethane, 1,2,3-Trichlorobenzene, 1,2,3-Trichloropropane, 1,2,4-Trichlorobenzene, 1,2-Dibromo-3-chloropropane, 1,2-Dibromoethane, 1,3-Dichloropropane, 1-Chlorohexane, 2-Hexanone, 4-Methyl-2-pentanone, Acetone, Acrylonitrile, Benzyl Chloride, Bromoform, cis-1,4-Dichloro-2-Butene, Ethyl methacrylate, Hexachlorobutadiene, m-Dichlorobenzene, Methyl ethyl ketone, Methyl Tert Butyl Ether, n-Butylbenzene, Naphthalene, o-Dichlorobenzene, o-Xylene, p-Dichlorobenzene, Propionitrile, Styrene, trans-1,2-Dichloroethylene, trans-1,3-Dichloropropene, Trans-1,4-Dichloro-2-Butene, Vinyl Acetate are outside control limits. Probable cause due to

RPDs for MSD for 1,1-Dichloroethylene, 1,2,3-Trichlorobenzene, 1,2,4-Trichlorobenzene, 1-Chlorohexane, 2-Chloroethyl vinyl ether, Acetone, Allyl chloride, Carbon disulfide, Ethyl methacrylate, Freon 113, Hexane, Isopropylbenzene, m-Dichlorobenzene, Methyl iodide, Methyl Tert Butyl Ether, Methylene chloride, Naphthalene, o-Dichlorobenzene, o-Xylene, p-Dichlorobenzene, trans-1,2-Dichloroethylene, Vinyl Acetate are outside control limits for sample F78104-1MSD. Probable cause due to sample non-homogeneity.

Samples F78009-24, F78009-28, F78009-26, F78009-30, F78009-31, F78009-29, F78009-32, F78009-25, F78009-27 have surrogates outside control limits. Confirmation run for surrogate recoveries.

F78009-33, F78009-35 for Methylene chloride: Suspected laboratory contaminant.

Matrix: SO **Batch ID:** VH2463

All samples were analyzed within the recommended method holding time.

All method blanks for this batch meet method specific criteria.

Samples F78052-5MS, F78052-5MSD were used as the QC samples indicated.

Volatiles by GCMS by Method SW846 8260B

Matrix: SO **Batch ID:** VH2463

Blank Spike Recoverys for Dichlorodifluoromethane, Hexane, Methylene chloride are outside control limits.

Matrix Spike Recoverys for 1,1,2,2-Tetrachloroethane, 1,1,2-Trichloroethane, 1,2,3-Trichloropropane, 1,2-Dibromo-3-chloropropane, 1,2-Dibromoethane, 1,3-Dichloropropane, 1-Chlorohexane, 2-Chloroethyl vinyl ether, 2-Hexanone, 4-Methyl-2-pentanone, Acetone, Acetonitrile, Benzyl Chloride, Bromoform, cis-1,4-Dichloro-2-Butene, Dibromochloromethane, Ethyl methacrylate, Methyl ethyl ketone, Methyl methacrylate, Propionitrile, trans-1,3-Dichloropropene, Trans-1,4-Dichloro-2-Butene are outside control limits. Probable cause due to matrix

Matrix Spike Duplicate Recoverys for 1,1,2,2-Tetrachloroethane, 1,1,2-Trichloroethane, 1,2,3-Trichloropropane, 1,2-Dibromo-3-chloropropane, 1,2-Dibromoethane, 1,3-Dichloropropane, 2-Chloroethyl vinyl ether, 2-Hexanone, 4-Methyl-2-pentanone, Acetone, Acetonitrile, Benzyl Chloride, Bromoform, cis-1,4-Dichloro-2-Butene, Dibromochloromethane, Ethyl methacrylate, Methyl ethyl ketone, Methyl methacrylate, Pentachloroethane, Propionitrile, Tetrachloroethylene, trans-1,3-Dichloropropene, Trans-1,4-Dichloro-2-Butene are outside control limits. Probable cause due

RPD for MSD for Pentachloroethane is outside control limits for sample F78052-5MSD. Probable cause due to sample non-homogeneity.

Samples F78009-24, F78009-28, F78009-26, F78009-30, F78009-31, F78009-29, F78009-32, F78009-25, F78009-27 have surrogates outside control limits. Confirmation run for surrogate recoveries.

F78009-9, F78009-12 for Methylene chloride: ICV and BS outside of control limits. Suspected laboratory contaminant.

Matrix: SO **Batch ID:** VH2464

All samples were analyzed within the recommended method holding time.

Samples F78009-24MS, F78009-24MSD were used as the QC samples indicated.

All method blanks for this batch meet method specific criteria.

Blank Spike Recoverys for Dichlorodifluoromethane, Ethyl methacrylate, Methylene chloride are outside control limits.

Matrix Spike Recoverys for 1,1,2-Trichloroethane, 1,2,3-Trichloropropane, 1,2-Dibromo-3-chloropropane, 1,2-Dibromoethane, 1,3-Dichloropropane, 2-Hexanone, 4-Methyl-2-pentanone, Acetone, Acetonitrile, Benzyl Chloride, cis-1,4-Dichloro-2-Butene, Dichlorodifluoromethane, Ethyl methacrylate, Methyl ethyl ketone, Methylene chloride, Propionitrile, trans-1,3-Dichloropropene, Trans-1,4-Dichloro-2-Butene are outside control limits. Probable cause due to

Matrix Spike Duplicate Recoverys for 1,1,2-Trichloroethane, 1,2,3-Trichloropropane, 1,2-Dibromo-3-chloropropane, 1,2-Dibromoethane, 1,3-Dichloropropane, 2-Hexanone, 4-Methyl-2-pentanone, Acetone, Acetonitrile, Benzyl Chloride, cis-1,4-Dichloro-2-Butene, Dibromochloromethane, Dichlorodifluoromethane, Ethyl methacrylate, Methyl ethyl ketone, Methylene chloride, Propionitrile, trans-1,3-Dichloropropene, Trans-1,4-Dichloro-2-Butene are outside control limits. Probable cause due to matrix interference.

RPD for MSD for Acrolein is outside control limits for sample F78009-24MSD. Probable cause due to sample non-homogeneity.

Samples F78009-24, F78009-28, F78009-26, F78009-30, F78009-31, F78009-29, F78009-32, F78009-25, F78009-27 have surrogates outside control limits. Confirmation run for surrogate recoveries.

F78009-24, F78009-26, F78009-28, F78009-29, F78009-30, F78009-31, F78009-32: Confirmation run for surrogate recoveries.

F78009-25, F78009-27 for Dibromofluoromethane: Outside control limits; however, sample is ND.

F78009-13, F78009-14, F78009-15, F78009-16, F78009-17, F78009-21 for Methylene chloride: ICV and BS outside of control limits. Suspected laboratory contaminant.

Matrix: SO **Batch ID:** VH2465

All samples were analyzed within the recommended method holding time.

Samples F78145-1MS, F78145-1MSD were used as the QC samples indicated.

Samples F78009-18, F78009-19, F78009-20, F78009-22, F78009-23, F78009-24, F78009-26, F78009-28, F78009-29, F78009-30, F78009-32 have compound(s) reported with a “B” qualifier, indicating analyte is found in the associated method blank.

Blank Spike Recoverys for Dichlorodifluoromethane, Ethyl methacrylate are outside control limits.

Matrix Spike Recoverys for 1,1,2,2-Tetrachloroethane, 1,1,2-Trichloroethane, 1,2,3-Trichloropropane, 1,2-Dibromo-3-chloropropane, 1,2-Dibromoethane, 1,3-Dichloropropane, 1-Chlorohexane, 2-Chloroethyl vinyl ether, 2-Hexanone, 4-Methyl-2-pentanone, Acetone, Benzyl Chloride, Bromoform, cis-1,4-Dichloro-2-Butene, Dibromochloromethane, Ethyl methacrylate, Methyl ethyl ketone, Methyl methacrylate, o-Dichlorobenzene, trans-1,3-Dichloropropene, Trans-1,4-Dichloro-2-Butene are outside control limits. Probable cause due to matrix

Matrix Spike Duplicate Recoverys for 1,1,2,2-Tetrachloroethane, 1,1,2-Trichloroethane, 1,2,3-Trichloropropane, 1,2-Dibromo-3-chloropropane, 1,2-Dibromoethane, 1,3-Dichloropropane, 2-Chloroethyl vinyl ether, 2-Hexanone, 4-Methyl-2-pentanone, Acetone, Acetonitrile, Benzyl Chloride, Bromoform, cis-1,4-Dichloro-2-Butene, Dibromochloromethane, Dichlorodifluoromethane, Ethyl methacrylate, Methyl ethyl ketone, Propionitrile, trans-1,3-Dichloropropene, Trans-1,4-Dichloro-2-Butene are outside control limits. Probable cause due to matrix

Volatiles by GCMS by Method SW846 8260B

Matrix: SO **Batch ID:** VH2465

Samples F78009-24, F78009-28, F78009-26, F78009-30, F78009-31, F78009-29, F78009-32, F78009-25, F78009-27 have surrogates outside control limits. Confirmation run for surrogate recoveries.

F78009-18, F78009-22, F78009-23, F78009-24, F78009-26 for Methylene chloride: ICV outside of control limits. Suspected laboratory contaminant.

F78009-24 for 1,2-Dichloroethane-D4, Dibromofluoromethane: Outside control limits.

F78009-28, F78009-29, F78009-32 for 1,2-Dichloroethane-D4: Outside control limits. Confirmed by reanalysis.

F78009-28 for Dibromofluoromethane: Outside control limits.

F78009-26, F78009-29, F78009-30, F78009-31, F78009-32 for Dibromofluoromethane: Outside control limits. Confirmed by reanalysis.

F78009-19, F78009-20, F78009-28, F78009-29, F78009-30, F78009-32 for Methylene chloride: ICV outside of control limits. Suspected laboratory contaminant.

Extractables by GCMS by Method SW846 8270D

Matrix: AQ **Batch ID:** OP35095

All samples were extracted within the recommended method holding time.

All samples were analyzed within the recommended method holding time.

Samples F78054-1MS, F78054-1MSD were used as the QC samples indicated.

All method blanks for this batch meet method specific criteria.

Matrix Spike Recoverys for 4-Nitrophenol, Benzidine, Benzoic Acid, Phenol are outside control limits. Probable cause due to matrix interference.

Samples OP35095-MS, OP35095-MSD have surrogates outside control limits. Probable cause due to matrix interference.

F78009-36: Dilution required due to matrix interference.

Volatiles by GC by Method SW846 8015C

Matrix: AQ **Batch ID:** GCD4156

All samples were analyzed within the recommended method holding time.

Samples F78009-37MS, F78009-37MSD were used as the QC samples indicated.

All method blanks for this batch meet method specific criteria.

Samples F78096-14MS, F78096-14MSD have surrogates outside control limits. Probable cause due to matrix interference.

Matrix: AQ **Batch ID:** GCD4158

All samples were analyzed within the recommended method holding time.

Samples F78096-14MS, F78096-14MSD, F78096-1DUP were used as the QC samples indicated.

All method blanks for this batch meet method specific criteria.

Samples F78096-14MS, F78096-14MSD have surrogates outside control limits. Probable cause due to matrix interference.

F78096-14MS, F78096-14MSD for aaa-Trifluorotoluene: Result reported from PID.

F78096-14MS, F78096-14MSD for aaa-Trifluorotoluene: Outside control limits due to matrix interference.

Matrix: SO **Batch ID:** GQR2473

All samples were analyzed within the recommended method holding time.

All method blanks for this batch meet method specific criteria.

Samples F78002-2MS, F78002-2MSD were used as the QC samples indicated.

Samples F78096-14MS, F78096-14MSD have surrogates outside control limits. Probable cause due to matrix interference.

Matrix: SO **Batch ID:** GQR2474

All samples were analyzed within the recommended method holding time.

Samples F78009-24MS, F78009-24MSD were used as the QC samples indicated.

All method blanks for this batch meet method specific criteria.

Samples F78096-14MS, F78096-14MSD have surrogates outside control limits. Probable cause due to matrix interference.

Matrix: SO **Batch ID:** GQR2475

All samples were analyzed within the recommended method holding time.

Samples F78009-31MS, F78009-31MSD were used as the QC samples indicated.

All method blanks for this batch meet method specific criteria.

Samples F78096-14MS, F78096-14MSD have surrogates outside control limits. Probable cause due to matrix interference.

Volatiles by GC by Method SW846 8015C

Matrix: SO **Batch ID:** GQR2476

All samples were analyzed within the recommended method holding time.

Samples F78084-11MS, F78084-11MSD were used as the QC samples indicated.

All method blanks for this batch meet method specific criteria.

Samples F78096-14MS, F78096-14MSD have surrogates outside control limits. Probable cause due to matrix interference.

Extractables by GC by Method SW846 8015C

Matrix: AQ **Batch ID:** OP35097

All samples were extracted within the recommended method holding time.

All samples were analyzed within the recommended method holding time.

Samples F78009-37MS, F78009-37MSD were used as the QC samples indicated.

All method blanks for this batch meet method specific criteria.

F78009-36 for TPH (C10-C28): Petroleum hydrocarbon pattern begins before C10 and extends beyond C28.

Metals by Method SW846 6010C

Matrix: AQ **Batch ID:** MP19523

All samples were digested within the recommended method holding time.

All samples were analyzed within the recommended method holding time.

All method blanks for this batch meet method specific criteria.

Samples F78009-37DUP, F78009-37MS, F78009-37MSD, F78009-37PS, F78009-37SDL were used as the QC samples for metals.

Matrix Spike Recovery for Silver is outside control limits. Spike recovery indicates possible matrix interference.

Matrix Spike Duplicate Recoverys for Arsenic, Selenium, Silver are outside control limits. Probable cause due to matrix interference.

RPDs for Duplicate for Arsenic, Lead are outside control limits for sample MP19523-D1. RPD acceptable due to low duplicate and sample concentrations.

RPDs for Serial Dilution for Arsenic, Chromium, Lead, Selenium, Barium are outside control limits for sample MP19523-SD1. Percent difference acceptable due to low initial sample concentration (< 50 times IDL).

MP19523-SD1 for Barium: Serial dilution indicates possible matrix interference.

MP19523-PS1 for Silver: Spike recovery indicates matrix interference and/or outside control limits due to high level in sample relative to spike amount.

F78009-36 for Arsenic: Elevated reporting limit(s) due to matrix interference.

F78009-36 for Selenium: Elevated reporting limit(s) due to matrix interference.

F78009-36 for Lead: Elevated reporting limit(s) due to matrix interference.

F78009-36 for Chromium: Elevated reporting limit(s) due to matrix interference.

F78009-36 for Barium: Elevated reporting limit(s) due to matrix interference.

F78009-37 for Selenium: Elevated reporting limit(s) due to matrix interference.

F78009-37 for Lead: Elevated reporting limit(s) due to matrix interference.

F78009-37 for Chromium: Elevated reporting limit(s) due to matrix interference.

F78009-37 for Cadmium: Elevated reporting limit(s) due to matrix interference.

F78009-37 for Arsenic: Elevated reporting limit(s) due to matrix interference.

F78009-36 for Cadmium: Elevated reporting limit(s) due to matrix interference.

Matrix: AQ **Batch ID:** MP19535

All samples were digested within the recommended method holding time.

All samples were analyzed within the recommended method holding time.

All method blanks for this batch meet method specific criteria.

Samples F78009-36FDUP, F78009-36FMS, F78009-36FMSD, F78009-36FSDL, F78009-36FPS were used as the QC samples for metals.

Matrix Spike and Matrix Spike Duplicate Recoverys for Silver are outside control limits. Spike recovery indicates possible matrix interference.

RPDs for Serial Dilution for Arsenic, Barium are outside control limits for sample MP19535-SD1. Percent difference acceptable due to low initial sample concentration (< 50 times IDL).

MP19535-PS1 for Silver: Spike recovery indicates matrix interference and/or outside control limits due to high level in sample relative to spike amount.

Metals by Method SW846 6010C

Matrix: AQ **Batch ID:** MP19535

F78009-37F for Selenium: Elevated reporting limit(s) due to matrix interference.
F78009-37F for Lead: Elevated reporting limit(s) due to matrix interference.
F78009-37F for Chromium: Elevated reporting limit(s) due to matrix interference.
F78009-37F for Cadmium: Elevated reporting limit(s) due to matrix interference.
F78009-37F for Arsenic: Elevated reporting limit(s) due to matrix interference.
F78009-36F for Selenium: Elevated reporting limit(s) due to matrix interference.
F78009-36F for Lead: Elevated reporting limit(s) due to matrix interference.
F78009-36F for Chromium: Elevated reporting limit(s) due to matrix interference.

Metals by Method SW846 7470A

Matrix: AQ **Batch ID:** MP19507

All samples were digested within the recommended method holding time.
All samples were analyzed within the recommended method holding time.
All method blanks for this batch meet method specific criteria.
Samples F78009-37DUP, F78009-37MS, F78009-37MSD, F78009-37SDL were used as the QC samples for metals.

Matrix: AQ **Batch ID:** MP19508

All samples were digested within the recommended method holding time.
All samples were analyzed within the recommended method holding time.
All method blanks for this batch meet method specific criteria.
Samples F78009-37FDUP, F78009-37FMS, F78009-37FMSD, F78009-37FSDL were used as the QC samples for metals.

Wet Chemistry by Method SM19 2540C

Matrix: AQ **Batch ID:** GN42180

All samples were analyzed within the recommended method holding time.
All method blanks for this batch meet method specific criteria.
Sample F78009-37DUP was used as the QC sample for Solids, Total Dissolved.

Wet Chemistry by Method SM19 2540G

Matrix: SO **Batch ID:** GN42196

Sample F78009-1DUP was used as the QC sample for Solids, Percent.

Matrix: SO **Batch ID:** GN42197

Sample F77780-1DUP was used as the QC sample for Solids, Percent.

Accutest Laboratories Southeast (ALSE) certifies that this report meets the project requirements for analytical data produced for the samples as received at ALSE and as stated on the COC. ALSE certifies that the data meets the Data Quality Objectives for precision, accuracy and completeness as specified in the ALSE Quality Manual except as noted above. This report is to be used in its entirety. ALSE is not responsible for any assumptions of data quality if partial data packages are used.

Narrative prepared by:

_____ Date: December 7, 2010

Ellen Pampel, Inorganic QA (signature on file)

Tuesday, December 07, 2010

Southeast ACCUTEST LABORATORIES

Sample Results

Report of Analysis

Report of Analysis

Client Sample ID:	SS39-DPT-05A		
Lab Sample ID:	F78009-1	**Date Sampled:**	11/10/10
Matrix:	SO - Soil	**Date Received:**	11/12/10
Method:	SW846 8260B	**Percent Solids:**	94.2
Project:	Holloman AFB; Alamogordo, NM		

	File ID	DF	Analyzed	By	Prep Date	Prep Batch	Analytical Batch
Run #1	G0068567.D	1	11/18/10	MM	n/a	n/a	VG2581
Run #2							

	Initial Weight
Run #1	5.59 g
Run #2	

VOA Special List

CAS No.	Compound	Result	RL	MDL	Units	Q
67-64-1	Acetone	ND	47	19	ug/kg	
75-05-8	Acetonitrile	ND	47	17	ug/kg	
107-02-8	Acrolein	ND	24	10	ug/kg	
107-13-1	Acrylonitrile	ND	24	11	ug/kg	
107-05-1	Allyl chloride	ND	24	4.7	ug/kg	
71-43-2	Benzene	ND	4.7	1.4	ug/kg	
100-44-7	Benzyl Chloride	ND	4.7	1.4	ug/kg	
108-86-1	Bromobenzene	ND	4.7	1.3	ug/kg	
74-97-5	Bromochloromethane	ND	4.7	1.3	ug/kg	
75-27-4	Bromodichloromethane	ND	4.7	1.0	ug/kg	
75-25-2	Bromoform	ND	4.7	1.4	ug/kg	
104-51-8	n-Butylbenzene	ND	4.7	1.2	ug/kg	
135-98-8	sec-Butylbenzene	ND	4.7	1.5	ug/kg	
98-06-6	tert-Butylbenzene	ND	4.7	1.1	ug/kg	
108-90-7	Chlorobenzene	ND	4.7	0.95	ug/kg	
75-00-3	Chloroethane	ND	4.7	1.9	ug/kg	
67-66-3	Chloroform	ND	4.7	1.1	ug/kg	
544-10-5	1-Chlorohexane	ND	4.7	1.3	ug/kg	
95-49-8	o-Chlorotoluene	ND	4.7	1.1	ug/kg	
106-43-4	p-Chlorotoluene	ND	4.7	1.1	ug/kg	
110-75-8	2-Chloroethyl vinyl ether	ND	24	9.5	ug/kg	
75-15-0	Carbon disulfide	ND	4.7	1.9	ug/kg	
56-23-5	Carbon tetrachloride	ND	4.7	1.7	ug/kg	
75-34-3	1,1-Dichloroethane	ND	4.7	1.0	ug/kg	
75-35-4	1,1-Dichloroethylene	ND	4.7	1.3	ug/kg	
563-58-6	1,1-Dichloropropene	ND	4.7	1.2	ug/kg	
96-12-8	1,2-Dibromo-3-chloropropane	ND	4.7	2.2	ug/kg	
106-93-4	1,2-Dibromoethane	ND	4.7	0.95	ug/kg	
107-06-2	1,2-Dichloroethane	ND	4.7	0.95	ug/kg	
78-87-5	1,2-Dichloropropane	ND	4.7	1.1	ug/kg	
142-28-9	1,3-Dichloropropane	ND	4.7	0.95	ug/kg	
594-20-7	2,2-Dichloropropane	ND	4.7	1.3	ug/kg	

ND = Not detected MDL - Method Detection Limit
RL = Reporting Limit
E = Indicates value exceeds calibration range

J = Indicates an estimated value
B = Indicates analyte found in associated method blank
N = Indicates presumptive evidence of a compound

Report of Analysis

Client Sample ID:	SS39-DPT-05A		
Lab Sample ID:	F78009-1	**Date Sampled:**	11/10/10
Matrix:	SO - Soil	**Date Received:**	11/12/10
Method:	SW846 8260B	**Percent Solids:**	94.2
Project:	Holloman AFB; Alamogordo, NM		

VOA Special List

CAS No.	Compound	Result	RL	MDL	Units	Q
124-48-1	Dibromochloromethane	ND	4.7	0.95	ug/kg	
75-71-8	Dichlorodifluoromethane	ND	4.7	1.4	ug/kg	
156-59-2	cis-1,2-Dichloroethylene	ND	4.7	1.4	ug/kg	
10061-01-5	cis-1,3-Dichloropropene	ND	4.7	0.95	ug/kg	
1476-11-5	cis-1,4-Dichloro-2-Butene	ND	24	4.7	ug/kg	
541-73-1	m-Dichlorobenzene	ND	4.7	1.1	ug/kg	
95-50-1	o-Dichlorobenzene	ND	4.7	1.0	ug/kg	
106-46-7	p-Dichlorobenzene	ND	4.7	1.0	ug/kg	
156-60-5	trans-1,2-Dichloroethylene	ND	4.7	1.4	ug/kg	
10061-02-6	trans-1,3-Dichloropropene	ND	4.7	1.0	ug/kg	
100-41-4	Ethylbenzene	ND	4.7	0.95	ug/kg	
97-63-2	Ethyl methacrylate	ND	24	4.7	ug/kg	
76-13-1	Freon 113	ND	4.7	1.6	ug/kg	
591-78-6	2-Hexanone	ND	24	5.1	ug/kg	
87-68-3	Hexachlorobutadiene	ND	4.7	1.9	ug/kg	
110-54-3	Hexane	ND	4.7	1.8	ug/kg	
98-82-8	Isopropylbenzene	ND	4.7	1.0	ug/kg	
99-87-6	p-Isopropyltoluene	ND	4.7	1.1	ug/kg	
108-10-1	4-Methyl-2-pentanone	ND	24	5.2	ug/kg	
126-98-7	Methacrylonitrile	ND	24	8.7	ug/kg	
74-83-9	Methyl bromide	ND	4.7	1.9	ug/kg	
74-87-3	Methyl chloride	ND	4.7	1.9	ug/kg	
74-88-4	Methyl iodide	ND	9.5	1.0	ug/kg	
80-62-6	Methyl methacrylate	ND	4.7	1.7	ug/kg	
74-95-3	Methylene bromide	ND	4.7	1.4	ug/kg	
75-09-2	Methylene chloride [a]	5.3	9.5	4.4	ug/kg	J
78-93-3	Methyl ethyl ketone	ND	24	5.8	ug/kg	
1634-04-4	Methyl Tert Butyl Ether	ND	4.7	1.9	ug/kg	
91-20-3	Naphthalene	ND	4.7	1.9	ug/kg	
76-01-7	Pentachloroethane	ND	24	4.7	ug/kg	
107-12-0	Propionitrile	ND	47	15	ug/kg	
103-65-1	n-Propylbenzene	ND	4.7	1.3	ug/kg	
100-42-5	Styrene	ND	4.7	2.5	ug/kg	
630-20-6	1,1,1,2-Tetrachloroethane	ND	4.7	0.95	ug/kg	
71-55-6	1,1,1-Trichloroethane	ND	4.7	1.0	ug/kg	
79-34-5	1,1,2,2-Tetrachloroethane	ND	4.7	1.1	ug/kg	
79-00-5	1,1,2-Trichloroethane	ND	4.7	1.0	ug/kg	
87-61-6	1,2,3-Trichlorobenzene	ND	4.7	0.95	ug/kg	
96-18-4	1,2,3-Trichloropropane	ND	4.7	1.6	ug/kg	
120-82-1	1,2,4-Trichlorobenzene	ND	4.7	1.1	ug/kg	

ND = Not detected MDL - Method Detection Limit
RL = Reporting Limit
E = Indicates value exceeds calibration range

J = Indicates an estimated value
B = Indicates analyte found in associated method blank
N = Indicates presumptive evidence of a compound

Report of Analysis

Client Sample ID:	SS39-DPT-05A		
Lab Sample ID:	F78009-1	**Date Sampled:**	11/10/10
Matrix:	SO - Soil	**Date Received:**	11/12/10
Method:	SW846 8260B	**Percent Solids:**	94.2
Project:	Holloman AFB; Alamogordo, NM		

VOA Special List

CAS No.	Compound	Result	RL	MDL	Units	Q
95-63-6	1,2,4-Trimethylbenzene	ND	4.7	1.0	ug/kg	
108-67-8	1,3,5-Trimethylbenzene	ND	4.7	1.2	ug/kg	
127-18-4	Tetrachloroethylene	4.7	4.7	0.95	ug/kg	
108-88-3	Toluene	ND	4.7	1.1	ug/kg	
79-01-6	Trichloroethylene	ND	4.7	1.1	ug/kg	
75-69-4	Trichlorofluoromethane	ND	4.7	1.9	ug/kg	
110-57-6	Trans-1,4-Dichloro-2-Butene	ND	24	4.7	ug/kg	
75-01-4	Vinyl chloride	ND	4.7	1.4	ug/kg	
108-05-4	Vinyl Acetate	ND	24	13	ug/kg	
	m,p-Xylene	ND	9.5	2.1	ug/kg	
95-47-6	o-Xylene	ND	4.7	0.95	ug/kg	

CAS No.	Surrogate Recoveries	Run# 1	Run# 2	Limits
1868-53-7	Dibromofluoromethane	115%		80-121%
2037-26-5	Toluene-D8	92%		71-130%
460-00-4	4-Bromofluorobenzene	96%		59-148%
17060-07-0	1,2-Dichloroethane-D4	115%		77-123%

(a) BS outside of control limits; results may be biased high; suspected laboratory contaminant.

ND = Not detected MDL - Method Detection Limit
RL = Reporting Limit
E = Indicates value exceeds calibration range

J = Indicates an estimated value
B = Indicates analyte found in associated method blank
N = Indicates presumptive evidence of a compound

Report of Analysis

Client Sample ID:	SS39-DPT-05A		
Lab Sample ID:	F78009-1	**Date Sampled:**	11/10/10
Matrix:	SO - Soil	**Date Received:**	11/12/10
Method:	SW846 8015C	**Percent Solids:**	94.2
Project:	Holloman AFB; Alamogordo, NM		

	File ID	DF	Analyzed	By	Prep Date	Prep Batch	Analytical Batch
Run #1	QR056861.D	1	11/19/10	AH	n/a	n/a	GQR2473
Run #2							

	Initial Weight	Final Volume	Methanol Aliquot
Run #1	5.84 g	5.0 ml	100 ul
Run #2			

CAS No.	Compound	Result	RL	MDL	Units	Q
	TPH-GRO (C6-C10)	ND	4.9	2.4	mg/kg	

CAS No.	Surrogate Recoveries	Run# 1	Run# 2	Limits
460-00-4	4-Bromofluorobenzene	79%		56-136%
98-08-8	aaa-Trifluorotoluene	72%		61-121%

ND = Not detected MDL - Method Detection Limit
RL = Reporting Limit
E = Indicates value exceeds calibration range

J = Indicates an estimated value
B = Indicates analyte found in associated method blank
N = Indicates presumptive evidence of a compound

Report of Analysis

Client Sample ID:	SS39-DPT-05B		
Lab Sample ID:	F78009-2	**Date Sampled:**	11/10/10
Matrix:	SO - Soil	**Date Received:**	11/12/10
Method:	SW846 8260B	**Percent Solids:**	85.8
Project:	Holloman AFB; Alamogordo, NM		

	File ID	DF	Analyzed	By	Prep Date	Prep Batch	Analytical Batch
Run #1	G0068568.D	1	11/18/10	MM	n/a	n/a	VG2581
Run #2							

	Initial Weight
Run #1	5.34 g
Run #2	

VOA Special List

CAS No.	Compound	Result	RL	MDL	Units	Q
67-64-1	Acetone	ND	55	22	ug/kg	
75-05-8	Acetonitrile	ND	55	20	ug/kg	
107-02-8	Acrolein	ND	27	12	ug/kg	
107-13-1	Acrylonitrile	ND	27	12	ug/kg	
107-05-1	Allyl chloride	ND	27	5.5	ug/kg	
71-43-2	Benzene	ND	5.5	1.6	ug/kg	
100-44-7	Benzyl Chloride	ND	5.5	1.6	ug/kg	
108-86-1	Bromobenzene	ND	5.5	1.5	ug/kg	
74-97-5	Bromochloromethane	ND	5.5	1.5	ug/kg	
75-27-4	Bromodichloromethane	ND	5.5	1.2	ug/kg	
75-25-2	Bromoform	ND	5.5	1.6	ug/kg	
104-51-8	n-Butylbenzene	ND	5.5	1.4	ug/kg	
135-98-8	sec-Butylbenzene	ND	5.5	1.7	ug/kg	
98-06-6	tert-Butylbenzene	ND	5.5	1.3	ug/kg	
108-90-7	Chlorobenzene	ND	5.5	1.1	ug/kg	
75-00-3	Chloroethane	ND	5.5	2.2	ug/kg	
67-66-3	Chloroform	ND	5.5	1.3	ug/kg	
544-10-5	1-Chlorohexane	ND	5.5	1.5	ug/kg	
95-49-8	o-Chlorotoluene	ND	5.5	1.3	ug/kg	
106-43-4	p-Chlorotoluene	ND	5.5	1.3	ug/kg	
110-75-8	2-Chloroethyl vinyl ether	ND	27	11	ug/kg	
75-15-0	Carbon disulfide	ND	5.5	2.2	ug/kg	
56-23-5	Carbon tetrachloride	ND	5.5	2.0	ug/kg	
75-34-3	1,1-Dichloroethane	ND	5.5	1.2	ug/kg	
75-35-4	1,1-Dichloroethylene	ND	5.5	1.5	ug/kg	
563-58-6	1,1-Dichloropropene	ND	5.5	1.4	ug/kg	
96-12-8	1,2-Dibromo-3-chloropropane	ND	5.5	2.5	ug/kg	
106-93-4	1,2-Dibromoethane	ND	5.5	1.1	ug/kg	
107-06-2	1,2-Dichloroethane	ND	5.5	1.1	ug/kg	
78-87-5	1,2-Dichloropropane	ND	5.5	1.3	ug/kg	
142-28-9	1,3-Dichloropropane	ND	5.5	1.1	ug/kg	
594-20-7	2,2-Dichloropropane	ND	5.5	1.5	ug/kg	

ND = Not detected MDL - Method Detection Limit
RL = Reporting Limit
E = Indicates value exceeds calibration range

J = Indicates an estimated value
B = Indicates analyte found in associated method blank
N = Indicates presumptive evidence of a compound

Report of Analysis

Client Sample ID:	SS39-DPT-05B		
Lab Sample ID:	F78009-2	**Date Sampled:**	11/10/10
Matrix:	SO - Soil	**Date Received:**	11/12/10
Method:	SW846 8260B	**Percent Solids:**	85.8
Project:	Holloman AFB; Alamogordo, NM		

VOA Special List

CAS No.	Compound	Result	RL	MDL	Units	Q
124-48-1	Dibromochloromethane	ND	5.5	1.1	ug/kg	
75-71-8	Dichlorodifluoromethane	ND	5.5	1.6	ug/kg	
156-59-2	cis-1,2-Dichloroethylene	ND	5.5	1.6	ug/kg	
10061-01-5	cis-1,3-Dichloropropene	ND	5.5	1.1	ug/kg	
1476-11-5	cis-1,4-Dichloro-2-Butene	ND	27	5.5	ug/kg	
541-73-1	m-Dichlorobenzene	ND	5.5	1.3	ug/kg	
95-50-1	o-Dichlorobenzene	ND	5.5	1.2	ug/kg	
106-46-7	p-Dichlorobenzene	ND	5.5	1.2	ug/kg	
156-60-5	trans-1,2-Dichloroethylene	ND	5.5	1.6	ug/kg	
10061-02-6	trans-1,3-Dichloropropene	ND	5.5	1.2	ug/kg	
100-41-4	Ethylbenzene	ND	5.5	1.1	ug/kg	
97-63-2	Ethyl methacrylate	ND	27	5.5	ug/kg	
76-13-1	Freon 113	ND	5.5	1.9	ug/kg	
591-78-6	2-Hexanone	ND	27	5.9	ug/kg	
87-68-3	Hexachlorobutadiene	ND	5.5	2.2	ug/kg	
110-54-3	Hexane	ND	5.5	2.1	ug/kg	
98-82-8	Isopropylbenzene	ND	5.5	1.2	ug/kg	
99-87-6	p-Isopropyltoluene	ND	5.5	1.3	ug/kg	
108-10-1	4-Methyl-2-pentanone	ND	27	6.0	ug/kg	
126-98-7	Methacrylonitrile	ND	27	10	ug/kg	
74-83-9	Methyl bromide	ND	5.5	2.2	ug/kg	
74-87-3	Methyl chloride	ND	5.5	2.2	ug/kg	
74-88-4	Methyl iodide	ND	11	1.2	ug/kg	
80-62-6	Methyl methacrylate	ND	5.5	2.0	ug/kg	
74-95-3	Methylene bromide	ND	5.5	1.6	ug/kg	
75-09-2	Methylene chloride	ND	11	5.0	ug/kg	
78-93-3	Methyl ethyl ketone	ND	27	6.7	ug/kg	
1634-04-4	Methyl Tert Butyl Ether	ND	5.5	2.2	ug/kg	
91-20-3	Naphthalene	ND	5.5	2.2	ug/kg	
76-01-7	Pentachloroethane	ND	27	5.5	ug/kg	
107-12-0	Propionitrile	ND	55	17	ug/kg	
103-65-1	n-Propylbenzene	ND	5.5	1.5	ug/kg	
100-42-5	Styrene	ND	5.5	2.8	ug/kg	
630-20-6	1,1,1,2-Tetrachloroethane	ND	5.5	1.1	ug/kg	
71-55-6	1,1,1-Trichloroethane	ND	5.5	1.2	ug/kg	
79-34-5	1,1,2,2-Tetrachloroethane	ND	5.5	1.3	ug/kg	
79-00-5	1,1,2-Trichloroethane	ND	5.5	1.2	ug/kg	
87-61-6	1,2,3-Trichlorobenzene	ND	5.5	1.1	ug/kg	
96-18-4	1,2,3-Trichloropropane	ND	5.5	1.9	ug/kg	
120-82-1	1,2,4-Trichlorobenzene	ND	5.5	1.3	ug/kg	

ND = Not detected MDL - Method Detection Limit
RL = Reporting Limit
E = Indicates value exceeds calibration range

J = Indicates an estimated value
B = Indicates analyte found in associated method blank
N = Indicates presumptive evidence of a compound

Report of Analysis

Client Sample ID:	SS39-DPT-05B		
Lab Sample ID:	F78009-2	**Date Sampled:**	11/10/10
Matrix:	SO - Soil	**Date Received:**	11/12/10
Method:	SW846 8260B	**Percent Solids:**	85.8
Project:	Holloman AFB; Alamogordo, NM		

VOA Special List

CAS No.	Compound	Result	RL	MDL	Units	Q
95-63-6	1,2,4-Trimethylbenzene	ND	5.5	1.2	ug/kg	
108-67-8	1,3,5-Trimethylbenzene	ND	5.5	1.4	ug/kg	
127-18-4	Tetrachloroethylene	ND	5.5	1.1	ug/kg	
108-88-3	Toluene	ND	5.5	1.3	ug/kg	
79-01-6	Trichloroethylene	ND	5.5	1.3	ug/kg	
75-69-4	Trichlorofluoromethane	ND	5.5	2.2	ug/kg	
110-57-6	Trans-1,4-Dichloro-2-Butene	ND	27	5.5	ug/kg	
75-01-4	Vinyl chloride	ND	5.5	1.6	ug/kg	
108-05-4	Vinyl Acetate	ND	27	15	ug/kg	
	m,p-Xylene	ND	11	2.4	ug/kg	
95-47-6	o-Xylene	ND	5.5	1.1	ug/kg	

CAS No.	Surrogate Recoveries	Run# 1	Run# 2	Limits
1868-53-7	Dibromofluoromethane	112%		80-121%
2037-26-5	Toluene-D8	91%		71-130%
460-00-4	4-Bromofluorobenzene	95%		59-148%
17060-07-0	1,2-Dichloroethane-D4	116%		77-123%

ND = Not detected MDL - Method Detection Limit
RL = Reporting Limit
E = Indicates value exceeds calibration range

J = Indicates an estimated value
B = Indicates analyte found in associated method blank
N = Indicates presumptive evidence of a compound

Report of Analysis

Client Sample ID:	SS39-DPT-05B		
Lab Sample ID:	F78009-2	**Date Sampled:**	11/10/10
Matrix:	SO - Soil	**Date Received:**	11/12/10
Method:	SW846 8015C	**Percent Solids:**	85.8
Project:	Holloman AFB; Alamogordo, NM		

	File ID	DF	Analyzed	By	Prep Date	Prep Batch	Analytical Batch
Run #1	QR056862.D	1	11/19/10	AH	n/a	n/a	GQR2473
Run #2							

	Initial Weight	Final Volume	Methanol Aliquot
Run #1	6.31 g	5.0 ml	100 ul
Run #2			

CAS No.	Compound	Result	RL	MDL	Units	Q
	TPH-GRO (C6-C10)	ND	5.4	2.7	mg/kg	

CAS No.	Surrogate Recoveries	Run# 1	Run# 2	Limits
460-00-4	4-Bromofluorobenzene	81%		56-136%
98-08-8	aaa-Trifluorotoluene	72%		61-121%

ND = Not detected MDL - Method Detection Limit
RL = Reporting Limit
E = Indicates value exceeds calibration range

J = Indicates an estimated value
B = Indicates analyte found in associated method blank
N = Indicates presumptive evidence of a compound

Report of Analysis

Client Sample ID:	SS39-DPT-05C		
Lab Sample ID:	F78009-3	**Date Sampled:**	11/10/10
Matrix:	SO - Soil	**Date Received:**	11/12/10
Method:	SW846 8260B	**Percent Solids:**	87.8
Project:	Holloman AFB; Alamogordo, NM		

	File ID	DF	Analyzed	By	Prep Date	Prep Batch	Analytical Batch
Run #1	G0068569.D	1	11/18/10	MM	n/a	n/a	VG2581
Run #2							

	Initial Weight
Run #1	7.48 g
Run #2	

VOA Special List

CAS No.	Compound	Result	RL	MDL	Units	Q
67-64-1	Acetone	ND	38	15	ug/kg	
75-05-8	Acetonitrile	ND	38	14	ug/kg	
107-02-8	Acrolein	ND	19	8.4	ug/kg	
107-13-1	Acrylonitrile	ND	19	8.7	ug/kg	
107-05-1	Allyl chloride	ND	19	3.8	ug/kg	
71-43-2	Benzene	ND	3.8	1.1	ug/kg	
100-44-7	Benzyl Chloride	ND	3.8	1.1	ug/kg	
108-86-1	Bromobenzene	ND	3.8	1.1	ug/kg	
74-97-5	Bromochloromethane	ND	3.8	1.1	ug/kg	
75-27-4	Bromodichloromethane	ND	3.8	0.84	ug/kg	
75-25-2	Bromoform	ND	3.8	1.1	ug/kg	
104-51-8	n-Butylbenzene	ND	3.8	0.99	ug/kg	
135-98-8	sec-Butylbenzene	ND	3.8	1.2	ug/kg	
98-06-6	tert-Butylbenzene	ND	3.8	0.91	ug/kg	
108-90-7	Chlorobenzene	ND	3.8	0.76	ug/kg	
75-00-3	Chloroethane	ND	3.8	1.5	ug/kg	
67-66-3	Chloroform	ND	3.8	0.91	ug/kg	
544-10-5	1-Chlorohexane	ND	3.8	1.1	ug/kg	
95-49-8	o-Chlorotoluene	ND	3.8	0.91	ug/kg	
106-43-4	p-Chlorotoluene	ND	3.8	0.91	ug/kg	
110-75-8	2-Chloroethyl vinyl ether	ND	19	7.6	ug/kg	
75-15-0	Carbon disulfide	ND	3.8	1.5	ug/kg	
56-23-5	Carbon tetrachloride	ND	3.8	1.4	ug/kg	
75-34-3	1,1-Dichloroethane	ND	3.8	0.84	ug/kg	
75-35-4	1,1-Dichloroethylene	ND	3.8	1.1	ug/kg	
563-58-6	1,1-Dichloropropene	ND	3.8	0.99	ug/kg	
96-12-8	1,2-Dibromo-3-chloropropane	ND	3.8	1.8	ug/kg	
106-93-4	1,2-Dibromoethane	ND	3.8	0.76	ug/kg	
107-06-2	1,2-Dichloroethane	ND	3.8	0.76	ug/kg	
78-87-5	1,2-Dichloropropane	ND	3.8	0.91	ug/kg	
142-28-9	1,3-Dichloropropane	ND	3.8	0.76	ug/kg	
594-20-7	2,2-Dichloropropane	ND	3.8	1.1	ug/kg	

ND = Not detected MDL - Method Detection Limit
RL = Reporting Limit
E = Indicates value exceeds calibration range

J = Indicates an estimated value
B = Indicates analyte found in associated method blank
N = Indicates presumptive evidence of a compound

Report of Analysis

Client Sample ID:	SS39-DPT-05C		
Lab Sample ID:	F78009-3	**Date Sampled:**	11/10/10
Matrix:	SO - Soil	**Date Received:**	11/12/10
Method:	SW846 8260B	**Percent Solids:**	87.8
Project:	Holloman AFB; Alamogordo, NM		

VOA Special List

CAS No.	Compound	Result	RL	MDL	Units	Q
124-48-1	Dibromochloromethane	ND	3.8	0.76	ug/kg	
75-71-8	Dichlorodifluoromethane	ND	3.8	1.1	ug/kg	
156-59-2	cis-1,2-Dichloroethylene	ND	3.8	1.1	ug/kg	
10061-01-5	cis-1,3-Dichloropropene	ND	3.8	0.76	ug/kg	
1476-11-5	cis-1,4-Dichloro-2-Butene	ND	19	3.8	ug/kg	
541-73-1	m-Dichlorobenzene	ND	3.8	0.91	ug/kg	
95-50-1	o-Dichlorobenzene	ND	3.8	0.84	ug/kg	
106-46-7	p-Dichlorobenzene	ND	3.8	0.84	ug/kg	
156-60-5	trans-1,2-Dichloroethylene	ND	3.8	1.1	ug/kg	
10061-02-6	trans-1,3-Dichloropropene	ND	3.8	0.84	ug/kg	
100-41-4	Ethylbenzene	ND	3.8	0.76	ug/kg	
97-63-2	Ethyl methacrylate	ND	19	3.8	ug/kg	
76-13-1	Freon 113	ND	3.8	1.3	ug/kg	
591-78-6	2-Hexanone	ND	19	4.1	ug/kg	
87-68-3	Hexachlorobutadiene	ND	3.8	1.5	ug/kg	
110-54-3	Hexane	ND	3.8	1.4	ug/kg	
98-82-8	Isopropylbenzene	ND	3.8	0.84	ug/kg	
99-87-6	p-Isopropyltoluene	ND	3.8	0.91	ug/kg	
108-10-1	4-Methyl-2-pentanone	ND	19	4.2	ug/kg	
126-98-7	Methacrylonitrile	ND	19	7.0	ug/kg	
74-83-9	Methyl bromide	ND	3.8	1.5	ug/kg	
74-87-3	Methyl chloride	ND	3.8	1.5	ug/kg	
74-88-4	Methyl iodide	ND	7.6	0.84	ug/kg	
80-62-6	Methyl methacrylate	ND	3.8	1.4	ug/kg	
74-95-3	Methylene bromide	ND	3.8	1.1	ug/kg	
75-09-2	Methylene chloride	ND	7.6	3.5	ug/kg	
78-93-3	Methyl ethyl ketone	ND	19	4.6	ug/kg	
1634-04-4	Methyl Tert Butyl Ether	ND	3.8	1.5	ug/kg	
91-20-3	Naphthalene	ND	3.8	1.5	ug/kg	
76-01-7	Pentachloroethane	ND	19	3.8	ug/kg	
107-12-0	Propionitrile	ND	38	12	ug/kg	
103-65-1	n-Propylbenzene	ND	3.8	1.1	ug/kg	
100-42-5	Styrene	ND	3.8	2.0	ug/kg	
630-20-6	1,1,1,2-Tetrachloroethane	ND	3.8	0.76	ug/kg	
71-55-6	1,1,1-Trichloroethane	ND	3.8	0.84	ug/kg	
79-34-5	1,1,2,2-Tetrachloroethane	ND	3.8	0.91	ug/kg	
79-00-5	1,1,2-Trichloroethane	ND	3.8	0.84	ug/kg	
87-61-6	1,2,3-Trichlorobenzene	ND	3.8	0.76	ug/kg	
96-18-4	1,2,3-Trichloropropane	ND	3.8	1.3	ug/kg	
120-82-1	1,2,4-Trichlorobenzene	ND	3.8	0.91	ug/kg	

ND = Not detected MDL - Method Detection Limit
RL = Reporting Limit
E = Indicates value exceeds calibration range

J = Indicates an estimated value
B = Indicates analyte found in associated method blank
N = Indicates presumptive evidence of a compound

Report of Analysis

Client Sample ID:	SS39-DPT-05C		
Lab Sample ID:	F78009-3	**Date Sampled:**	11/10/10
Matrix:	SO - Soil	**Date Received:**	11/12/10
Method:	SW846 8260B	**Percent Solids:**	87.8
Project:	Holloman AFB; Alamogordo, NM		

VOA Special List

CAS No.	Compound	Result	RL	MDL	Units	Q
95-63-6	1,2,4-Trimethylbenzene	ND	3.8	0.84	ug/kg	
108-67-8	1,3,5-Trimethylbenzene	ND	3.8	0.99	ug/kg	
127-18-4	Tetrachloroethylene	11.0	3.8	0.76	ug/kg	
108-88-3	Toluene	ND	3.8	0.91	ug/kg	
79-01-6	Trichloroethylene	ND	3.8	0.91	ug/kg	
75-69-4	Trichlorofluoromethane	ND	3.8	1.5	ug/kg	
110-57-6	Trans-1,4-Dichloro-2-Butene	ND	19	3.8	ug/kg	
75-01-4	Vinyl chloride	ND	3.8	1.1	ug/kg	
108-05-4	Vinyl Acetate	ND	19	11	ug/kg	
	m,p-Xylene	ND	7.6	1.7	ug/kg	
95-47-6	o-Xylene	ND	3.8	0.76	ug/kg	

CAS No.	Surrogate Recoveries	Run# 1	Run# 2	Limits
1868-53-7	Dibromofluoromethane	116%		80-121%
2037-26-5	Toluene-D8	90%		71-130%
460-00-4	4-Bromofluorobenzene	94%		59-148%
17060-07-0	1,2-Dichloroethane-D4	118%		77-123%

ND = Not detected MDL - Method Detection Limit
RL = Reporting Limit
E = Indicates value exceeds calibration range

J = Indicates an estimated value
B = Indicates analyte found in associated method blank
N = Indicates presumptive evidence of a compound

Report of Analysis

Client Sample ID:	SS39-DPT-05C		
Lab Sample ID:	F78009-3	**Date Sampled:**	11/10/10
Matrix:	SO - Soil	**Date Received:**	11/12/10
Method:	SW846 8015C	**Percent Solids:**	87.8
Project:	Holloman AFB; Alamogordo, NM		

	File ID	DF	Analyzed	By	Prep Date	Prep Batch	Analytical Batch
Run #1	QR056863.D	1	11/19/10	AH	n/a	n/a	GQR2473
Run #2							

	Initial Weight	Final Volume	Methanol Aliquot
Run #1	6.62 g	5.0 ml	100 ul
Run #2			

CAS No.	Compound	Result	RL	MDL	Units	Q
	TPH-GRO (C6-C10)	ND	5.0	2.5	mg/kg	

CAS No.	Surrogate Recoveries	Run# 1	Run# 2	Limits
460-00-4	4-Bromofluorobenzene	82%		56-136%
98-08-8	aaa-Trifluorotoluene	72%		61-121%

ND = Not detected MDL - Method Detection Limit
RL = Reporting Limit
E = Indicates value exceeds calibration range

J = Indicates an estimated value
B = Indicates analyte found in associated method blank
N = Indicates presumptive evidence of a compound

Report of Analysis

Client Sample ID:	SS39-DPT-06A		
Lab Sample ID:	F78009-4	**Date Sampled:**	11/10/10
Matrix:	SO - Soil	**Date Received:**	11/12/10
Method:	SW846 8260B	**Percent Solids:**	96.0
Project:	Holloman AFB; Alamogordo, NM		

	File ID	DF	Analyzed	By	Prep Date	Prep Batch	Analytical Batch
Run #1	G0068570.D	1	11/18/10	MM	n/a	n/a	VG2581
Run #2							

	Initial Weight
Run #1	6.44 g
Run #2	

VOA Special List

CAS No.	Compound	Result	RL	MDL	Units	Q
67-64-1	Acetone	ND	40	16	ug/kg	
75-05-8	Acetonitrile	ND	40	15	ug/kg	
107-02-8	Acrolein	ND	20	8.9	ug/kg	
107-13-1	Acrylonitrile	ND	20	9.2	ug/kg	
107-05-1	Allyl chloride	ND	20	4.0	ug/kg	
71-43-2	Benzene	ND	4.0	1.2	ug/kg	
100-44-7	Benzyl Chloride	ND	4.0	1.2	ug/kg	
108-86-1	Bromobenzene	ND	4.0	1.1	ug/kg	
74-97-5	Bromochloromethane	ND	4.0	1.1	ug/kg	
75-27-4	Bromodichloromethane	ND	4.0	0.89	ug/kg	
75-25-2	Bromoform	ND	4.0	1.2	ug/kg	
104-51-8	n-Butylbenzene	ND	4.0	1.1	ug/kg	
135-98-8	sec-Butylbenzene	ND	4.0	1.3	ug/kg	
98-06-6	tert-Butylbenzene	ND	4.0	0.97	ug/kg	
108-90-7	Chlorobenzene	ND	4.0	0.81	ug/kg	
75-00-3	Chloroethane	ND	4.0	1.6	ug/kg	
67-66-3	Chloroform	ND	4.0	0.97	ug/kg	
544-10-5	1-Chlorohexane	ND	4.0	1.1	ug/kg	
95-49-8	o-Chlorotoluene	ND	4.0	0.97	ug/kg	
106-43-4	p-Chlorotoluene	ND	4.0	0.97	ug/kg	
110-75-8	2-Chloroethyl vinyl ether	ND	20	8.1	ug/kg	
75-15-0	Carbon disulfide	ND	4.0	1.6	ug/kg	
56-23-5	Carbon tetrachloride	ND	4.0	1.5	ug/kg	
75-34-3	1,1-Dichloroethane	ND	4.0	0.89	ug/kg	
75-35-4	1,1-Dichloroethylene	ND	4.0	1.1	ug/kg	
563-58-6	1,1-Dichloropropene	ND	4.0	1.1	ug/kg	
96-12-8	1,2-Dibromo-3-chloropropane	ND	4.0	1.9	ug/kg	
106-93-4	1,2-Dibromoethane	ND	4.0	0.81	ug/kg	
107-06-2	1,2-Dichloroethane	ND	4.0	0.81	ug/kg	
78-87-5	1,2-Dichloropropane	ND	4.0	0.97	ug/kg	
142-28-9	1,3-Dichloropropane	ND	4.0	0.81	ug/kg	
594-20-7	2,2-Dichloropropane	ND	4.0	1.1	ug/kg	

ND = Not detected MDL - Method Detection Limit
RL = Reporting Limit
E = Indicates value exceeds calibration range

J = Indicates an estimated value
B = Indicates analyte found in associated method blank
N = Indicates presumptive evidence of a compound

Report of Analysis

Client Sample ID:	SS39-DPT-06A		
Lab Sample ID:	F78009-4	**Date Sampled:**	11/10/10
Matrix:	SO - Soil	**Date Received:**	11/12/10
Method:	SW846 8260B	**Percent Solids:**	96.0
Project:	Holloman AFB; Alamogordo, NM		

VOA Special List

CAS No.	Compound	Result	RL	MDL	Units	Q
124-48-1	Dibromochloromethane	ND	4.0	0.81	ug/kg	
75-71-8	Dichlorodifluoromethane	ND	4.0	1.2	ug/kg	
156-59-2	cis-1,2-Dichloroethylene	ND	4.0	1.2	ug/kg	
10061-01-5	cis-1,3-Dichloropropene	ND	4.0	0.81	ug/kg	
1476-11-5	cis-1,4-Dichloro-2-Butene	ND	20	4.0	ug/kg	
541-73-1	m-Dichlorobenzene	ND	4.0	0.97	ug/kg	
95-50-1	o-Dichlorobenzene	ND	4.0	0.89	ug/kg	
106-46-7	p-Dichlorobenzene	ND	4.0	0.89	ug/kg	
156-60-5	trans-1,2-Dichloroethylene	ND	4.0	1.2	ug/kg	
10061-02-6	trans-1,3-Dichloropropene	ND	4.0	0.89	ug/kg	
100-41-4	Ethylbenzene	ND	4.0	0.81	ug/kg	
97-63-2	Ethyl methacrylate	ND	20	4.0	ug/kg	
76-13-1	Freon 113	ND	4.0	1.4	ug/kg	
591-78-6	2-Hexanone	ND	20	4.4	ug/kg	
87-68-3	Hexachlorobutadiene	ND	4.0	1.6	ug/kg	
110-54-3	Hexane	ND	4.0	1.5	ug/kg	
98-82-8	Isopropylbenzene	ND	4.0	0.89	ug/kg	
99-87-6	p-Isopropyltoluene	ND	4.0	0.97	ug/kg	
108-10-1	4-Methyl-2-pentanone	ND	20	4.4	ug/kg	
126-98-7	Methacrylonitrile	ND	20	7.4	ug/kg	
74-83-9	Methyl bromide	ND	4.0	1.6	ug/kg	
74-87-3	Methyl chloride	ND	4.0	1.6	ug/kg	
74-88-4	Methyl iodide	ND	8.1	0.89	ug/kg	
80-62-6	Methyl methacrylate	ND	4.0	1.5	ug/kg	
74-95-3	Methylene bromide	ND	4.0	1.2	ug/kg	
75-09-2	Methylene chloride	ND	8.1	3.7	ug/kg	
78-93-3	Methyl ethyl ketone	ND	20	4.9	ug/kg	
1634-04-4	Methyl Tert Butyl Ether	ND	4.0	1.6	ug/kg	
91-20-3	Naphthalene	ND	4.0	1.6	ug/kg	
76-01-7	Pentachloroethane	ND	20	4.0	ug/kg	
107-12-0	Propionitrile	ND	40	13	ug/kg	
103-65-1	n-Propylbenzene	ND	4.0	1.1	ug/kg	
100-42-5	Styrene	ND	4.0	2.1	ug/kg	
630-20-6	1,1,1,2-Tetrachloroethane	ND	4.0	0.81	ug/kg	
71-55-6	1,1,1-Trichloroethane	ND	4.0	0.89	ug/kg	
79-34-5	1,1,2,2-Tetrachloroethane	ND	4.0	0.97	ug/kg	
79-00-5	1,1,2-Trichloroethane	ND	4.0	0.89	ug/kg	
87-61-6	1,2,3-Trichlorobenzene	ND	4.0	0.81	ug/kg	
96-18-4	1,2,3-Trichloropropane	ND	4.0	1.4	ug/kg	
120-82-1	1,2,4-Trichlorobenzene	ND	4.0	0.97	ug/kg	

ND = Not detected MDL - Method Detection Limit
RL = Reporting Limit
E = Indicates value exceeds calibration range

J = Indicates an estimated value
B = Indicates analyte found in associated method blank
N = Indicates presumptive evidence of a compound

Report of Analysis

Client Sample ID:	SS39-DPT-06A		
Lab Sample ID:	F78009-4	**Date Sampled:**	11/10/10
Matrix:	SO - Soil	**Date Received:**	11/12/10
Method:	SW846 8260B	**Percent Solids:**	96.0
Project:	Holloman AFB; Alamogordo, NM		

VOA Special List

CAS No.	Compound	Result	RL	MDL	Units	Q
95-63-6	1,2,4-Trimethylbenzene	ND	4.0	0.89	ug/kg	
108-67-8	1,3,5-Trimethylbenzene	ND	4.0	1.1	ug/kg	
127-18-4	Tetrachloroethylene	53.2	4.0	0.81	ug/kg	
108-88-3	Toluene	ND	4.0	0.97	ug/kg	
79-01-6	Trichloroethylene	ND	4.0	0.97	ug/kg	
75-69-4	Trichlorofluoromethane	ND	4.0	1.6	ug/kg	
110-57-6	Trans-1,4-Dichloro-2-Butene	ND	20	4.0	ug/kg	
75-01-4	Vinyl chloride	ND	4.0	1.2	ug/kg	
108-05-4	Vinyl Acetate	ND	20	11	ug/kg	
	m,p-Xylene	ND	8.1	1.8	ug/kg	
95-47-6	o-Xylene	ND	4.0	0.81	ug/kg	

CAS No.	Surrogate Recoveries	Run# 1	Run# 2	Limits
1868-53-7	Dibromofluoromethane	113%		80-121%
2037-26-5	Toluene-D8	93%		71-130%
460-00-4	4-Bromofluorobenzene	104%		59-148%
17060-07-0	1,2-Dichloroethane-D4	111%		77-123%

ND = Not detected MDL - Method Detection Limit
RL = Reporting Limit
E = Indicates value exceeds calibration range

J = Indicates an estimated value
B = Indicates analyte found in associated method blank
N = Indicates presumptive evidence of a compound

Report of Analysis

Client Sample ID:	SS39-DPT-06A		
Lab Sample ID:	F78009-4	**Date Sampled:**	11/10/10
Matrix:	SO - Soil	**Date Received:**	11/12/10
Method:	SW846 8015C	**Percent Solids:**	96.0
Project:	Holloman AFB; Alamogordo, NM		

	File ID	DF	Analyzed	By	Prep Date	Prep Batch	Analytical Batch
Run #1	QR056864.D	1	11/19/10	AH	n/a	n/a	GQR2473
Run #2							

	Initial Weight	Final Volume	Methanol Aliquot
Run #1	6.31 g	5.0 ml	100 ul
Run #2			

CAS No.	Compound	Result	RL	MDL	Units	Q
	TPH-GRO (C6-C10)	ND	4.3	2.2	mg/kg	

CAS No.	Surrogate Recoveries	Run# 1	Run# 2	Limits
460-00-4	4-Bromofluorobenzene	81%		56-136%
98-08-8	aaa-Trifluorotoluene	74%		61-121%

ND = Not detected MDL - Method Detection Limit
RL = Reporting Limit
E = Indicates value exceeds calibration range

J = Indicates an estimated value
B = Indicates analyte found in associated method blank
N = Indicates presumptive evidence of a compound

Report of Analysis

Client Sample ID:	SS39-DPT-06B		
Lab Sample ID:	F78009-5	**Date Sampled:**	11/10/10
Matrix:	SO - Soil	**Date Received:**	11/12/10
Method:	SW846 8260B	**Percent Solids:**	85.8
Project:	Holloman AFB; Alamogordo, NM		

	File ID	DF	Analyzed	By	Prep Date	Prep Batch	Analytical Batch
Run #1	H066153.D	1	11/18/10	MM	n/a	n/a	VH2463
Run #2							

	Initial Weight
Run #1	7.54 g
Run #2	

VOA Special List

CAS No.	Compound	Result	RL	MDL	Units	Q
67-64-1	Acetone	ND	39	15	ug/kg	
75-05-8	Acetonitrile	ND	39	14	ug/kg	
107-02-8	Acrolein	ND	19	8.5	ug/kg	
107-13-1	Acrylonitrile	ND	19	8.8	ug/kg	
107-05-1	Allyl chloride	ND	19	3.9	ug/kg	
71-43-2	Benzene	ND	3.9	1.2	ug/kg	
100-44-7	Benzyl Chloride	ND	3.9	1.2	ug/kg	
108-86-1	Bromobenzene	ND	3.9	1.1	ug/kg	
74-97-5	Bromochloromethane	ND	3.9	1.1	ug/kg	
75-27-4	Bromodichloromethane	ND	3.9	0.85	ug/kg	
75-25-2	Bromoform	ND	3.9	1.2	ug/kg	
104-51-8	n-Butylbenzene	ND	3.9	1.0	ug/kg	
135-98-8	sec-Butylbenzene	ND	3.9	1.2	ug/kg	
98-06-6	tert-Butylbenzene	ND	3.9	0.93	ug/kg	
108-90-7	Chlorobenzene	ND	3.9	0.77	ug/kg	
75-00-3	Chloroethane	ND	3.9	1.5	ug/kg	
67-66-3	Chloroform	ND	3.9	0.93	ug/kg	
544-10-5	1-Chlorohexane	ND	3.9	1.1	ug/kg	
95-49-8	o-Chlorotoluene	ND	3.9	0.93	ug/kg	
106-43-4	p-Chlorotoluene	ND	3.9	0.93	ug/kg	
110-75-8	2-Chloroethyl vinyl ether	ND	19	7.7	ug/kg	
75-15-0	Carbon disulfide	ND	3.9	1.5	ug/kg	
56-23-5	Carbon tetrachloride	ND	3.9	1.4	ug/kg	
75-34-3	1,1-Dichloroethane	ND	3.9	0.85	ug/kg	
75-35-4	1,1-Dichloroethylene	ND	3.9	1.1	ug/kg	
563-58-6	1,1-Dichloropropene	ND	3.9	1.0	ug/kg	
96-12-8	1,2-Dibromo-3-chloropropane	ND	3.9	1.8	ug/kg	
106-93-4	1,2-Dibromoethane	ND	3.9	0.77	ug/kg	
107-06-2	1,2-Dichloroethane	ND	3.9	0.77	ug/kg	
78-87-5	1,2-Dichloropropane	ND	3.9	0.93	ug/kg	
142-28-9	1,3-Dichloropropane	ND	3.9	0.77	ug/kg	
594-20-7	2,2-Dichloropropane	ND	3.9	1.1	ug/kg	

ND = Not detected MDL - Method Detection Limit
RL = Reporting Limit
E = Indicates value exceeds calibration range

J = Indicates an estimated value
B = Indicates analyte found in associated method blank
N = Indicates presumptive evidence of a compound

Report of Analysis

Client Sample ID:	SS39-DPT-06B		
Lab Sample ID:	F78009-5	**Date Sampled:**	11/10/10
Matrix:	SO - Soil	**Date Received:**	11/12/10
Method:	SW846 8260B	**Percent Solids:**	85.8
Project:	Holloman AFB; Alamogordo, NM		

VOA Special List

CAS No.	Compound	Result	RL	MDL	Units	Q
124-48-1	Dibromochloromethane	ND	3.9	0.77	ug/kg	
75-71-8	Dichlorodifluoromethane	ND	3.9	1.2	ug/kg	
156-59-2	cis-1,2-Dichloroethylene	ND	3.9	1.2	ug/kg	
10061-01-5	cis-1,3-Dichloropropene	ND	3.9	0.77	ug/kg	
1476-11-5	cis-1,4-Dichloro-2-Butene	ND	19	3.9	ug/kg	
541-73-1	m-Dichlorobenzene	ND	3.9	0.93	ug/kg	
95-50-1	o-Dichlorobenzene	ND	3.9	0.85	ug/kg	
106-46-7	p-Dichlorobenzene	ND	3.9	0.85	ug/kg	
156-60-5	trans-1,2-Dichloroethylene	ND	3.9	1.2	ug/kg	
10061-02-6	trans-1,3-Dichloropropene	ND	3.9	0.85	ug/kg	
100-41-4	Ethylbenzene	ND	3.9	0.77	ug/kg	
97-63-2	Ethyl methacrylate	ND	19	3.9	ug/kg	
76-13-1	Freon 113	ND	3.9	1.3	ug/kg	
591-78-6	2-Hexanone	ND	19	4.2	ug/kg	
87-68-3	Hexachlorobutadiene	ND	3.9	1.5	ug/kg	
110-54-3	Hexane	ND	3.9	1.5	ug/kg	
98-82-8	Isopropylbenzene	ND	3.9	0.85	ug/kg	
99-87-6	p-Isopropyltoluene	ND	3.9	0.93	ug/kg	
108-10-1	4-Methyl-2-pentanone	ND	19	4.3	ug/kg	
126-98-7	Methacrylonitrile	ND	19	7.1	ug/kg	
74-83-9	Methyl bromide	ND	3.9	1.5	ug/kg	
74-87-3	Methyl chloride	ND	3.9	1.5	ug/kg	
74-88-4	Methyl iodide	ND	7.7	0.85	ug/kg	
80-62-6	Methyl methacrylate	ND	3.9	1.4	ug/kg	
74-95-3	Methylene bromide	ND	3.9	1.2	ug/kg	
75-09-2	Methylene chloride	ND	7.7	3.6	ug/kg	
78-93-3	Methyl ethyl ketone	ND	19	4.7	ug/kg	
1634-04-4	Methyl Tert Butyl Ether	ND	3.9	1.5	ug/kg	
91-20-3	Naphthalene	ND	3.9	1.5	ug/kg	
76-01-7	Pentachloroethane	ND	19	3.9	ug/kg	
107-12-0	Propionitrile	ND	39	12	ug/kg	
103-65-1	n-Propylbenzene	ND	3.9	1.1	ug/kg	
100-42-5	Styrene	ND	3.9	2.0	ug/kg	
630-20-6	1,1,1,2-Tetrachloroethane	ND	3.9	0.77	ug/kg	
71-55-6	1,1,1-Trichloroethane	ND	3.9	0.85	ug/kg	
79-34-5	1,1,2,2-Tetrachloroethane	ND	3.9	0.93	ug/kg	
79-00-5	1,1,2-Trichloroethane	ND	3.9	0.85	ug/kg	
87-61-6	1,2,3-Trichlorobenzene	ND	3.9	0.77	ug/kg	
96-18-4	1,2,3-Trichloropropane	ND	3.9	1.3	ug/kg	
120-82-1	1,2,4-Trichlorobenzene	ND	3.9	0.93	ug/kg	

ND = Not detected MDL - Method Detection Limit
RL = Reporting Limit
E = Indicates value exceeds calibration range

J = Indicates an estimated value
B = Indicates analyte found in associated method blank
N = Indicates presumptive evidence of a compound

Report of Analysis

Client Sample ID:	SS39-DPT-06B		
Lab Sample ID:	F78009-5	**Date Sampled:**	11/10/10
Matrix:	SO - Soil	**Date Received:**	11/12/10
Method:	SW846 8260B	**Percent Solids:**	85.8
Project:	Holloman AFB; Alamogordo, NM		

VOA Special List

CAS No.	Compound	Result	RL	MDL	Units	Q
95-63-6	1,2,4-Trimethylbenzene	ND	3.9	0.85	ug/kg	
108-67-8	1,3,5-Trimethylbenzene	ND	3.9	1.0	ug/kg	
127-18-4	Tetrachloroethylene	7.8	3.9	0.77	ug/kg	
108-88-3	Toluene	ND	3.9	0.93	ug/kg	
79-01-6	Trichloroethylene	ND	3.9	0.93	ug/kg	
75-69-4	Trichlorofluoromethane	ND	3.9	1.5	ug/kg	
110-57-6	Trans-1,4-Dichloro-2-Butene	ND	19	3.9	ug/kg	
75-01-4	Vinyl chloride	ND	3.9	1.2	ug/kg	
108-05-4	Vinyl Acetate	ND	19	11	ug/kg	
	m,p-Xylene	ND	7.7	1.7	ug/kg	
95-47-6	o-Xylene	ND	3.9	0.77	ug/kg	

CAS No.	Surrogate Recoveries	Run# 1	Run# 2	Limits
1868-53-7	Dibromofluoromethane	98%		80-121%
2037-26-5	Toluene-D8	80%		71-130%
460-00-4	4-Bromofluorobenzene	95%		59-148%
17060-07-0	1,2-Dichloroethane-D4	102%		77-123%

ND = Not detected MDL - Method Detection Limit
RL = Reporting Limit
E = Indicates value exceeds calibration range

J = Indicates an estimated value
B = Indicates analyte found in associated method blank
N = Indicates presumptive evidence of a compound

Report of Analysis

Client Sample ID:	SS39-DPT-06B		
Lab Sample ID:	F78009-5	**Date Sampled:**	11/10/10
Matrix:	SO - Soil	**Date Received:**	11/12/10
Method:	SW846 8015C	**Percent Solids:**	85.8
Project:	Holloman AFB; Alamogordo, NM		

	File ID	DF	Analyzed	By	Prep Date	Prep Batch	Analytical Batch
Run #1	QR056865.D	1	11/19/10	AH	n/a	n/a	GQR2473
Run #2							

	Initial Weight	Final Volume	Methanol Aliquot
Run #1	6.87 g	5.0 ml	100 ul
Run #2			

CAS No.	Compound	Result	RL	MDL	Units	Q
	TPH-GRO (C6-C10)	ND	5.1	2.5	mg/kg	

CAS No.	Surrogate Recoveries	Run# 1	Run# 2	Limits
460-00-4	4-Bromofluorobenzene	80%		56-136%
98-08-8	aaa-Trifluorotoluene	74%		61-121%

ND = Not detected MDL - Method Detection Limit
RL = Reporting Limit
E = Indicates value exceeds calibration range

J = Indicates an estimated value
B = Indicates analyte found in associated method blank
N = Indicates presumptive evidence of a compound

Report of Analysis

Client Sample ID:	SS39-DPT-06C		
Lab Sample ID:	F78009-6	**Date Sampled:**	11/10/10
Matrix:	SO - Soil	**Date Received:**	11/12/10
Method:	SW846 8260B	**Percent Solids:**	85.0
Project:	Holloman AFB; Alamogordo, NM		

	File ID	DF	Analyzed	By	Prep Date	Prep Batch	Analytical Batch
Run #1	H066154.D	1	11/18/10	MM	n/a	n/a	VH2463
Run #2							

	Initial Weight
Run #1	8.07 g
Run #2	

VOA Special List

CAS No.	Compound	Result	RL	MDL	Units	Q
67-64-1	Acetone	ND	36	15	ug/kg	
75-05-8	Acetonitrile	ND	36	13	ug/kg	
107-02-8	Acrolein	ND	18	8.0	ug/kg	
107-13-1	Acrylonitrile	ND	18	8.3	ug/kg	
107-05-1	Allyl chloride	ND	18	3.6	ug/kg	
71-43-2	Benzene	ND	3.6	1.1	ug/kg	
100-44-7	Benzyl Chloride	ND	3.6	1.1	ug/kg	
108-86-1	Bromobenzene	ND	3.6	1.0	ug/kg	
74-97-5	Bromochloromethane	ND	3.6	1.0	ug/kg	
75-27-4	Bromodichloromethane	ND	3.6	0.80	ug/kg	
75-25-2	Bromoform	ND	3.6	1.1	ug/kg	
104-51-8	n-Butylbenzene	ND	3.6	0.95	ug/kg	
135-98-8	sec-Butylbenzene	ND	3.6	1.2	ug/kg	
98-06-6	tert-Butylbenzene	ND	3.6	0.87	ug/kg	
108-90-7	Chlorobenzene	ND	3.6	0.73	ug/kg	
75-00-3	Chloroethane	ND	3.6	1.5	ug/kg	
67-66-3	Chloroform	ND	3.6	0.87	ug/kg	
544-10-5	1-Chlorohexane	ND	3.6	1.0	ug/kg	
95-49-8	o-Chlorotoluene	ND	3.6	0.87	ug/kg	
106-43-4	p-Chlorotoluene	ND	3.6	0.87	ug/kg	
110-75-8	2-Chloroethyl vinyl ether	ND	18	7.3	ug/kg	
75-15-0	Carbon disulfide	ND	3.6	1.5	ug/kg	
56-23-5	Carbon tetrachloride	ND	3.6	1.3	ug/kg	
75-34-3	1,1-Dichloroethane	ND	3.6	0.80	ug/kg	
75-35-4	1,1-Dichloroethylene	ND	3.6	1.0	ug/kg	
563-58-6	1,1-Dichloropropene	ND	3.6	0.95	ug/kg	
96-12-8	1,2-Dibromo-3-chloropropane	ND	3.6	1.7	ug/kg	
106-93-4	1,2-Dibromoethane	ND	3.6	0.73	ug/kg	
107-06-2	1,2-Dichloroethane	ND	3.6	0.73	ug/kg	
78-87-5	1,2-Dichloropropane	ND	3.6	0.87	ug/kg	
142-28-9	1,3-Dichloropropane	ND	3.6	0.73	ug/kg	
594-20-7	2,2-Dichloropropane	ND	3.6	1.0	ug/kg	

ND = Not detected MDL - Method Detection Limit
RL = Reporting Limit
E = Indicates value exceeds calibration range

J = Indicates an estimated value
B = Indicates analyte found in associated method blank
N = Indicates presumptive evidence of a compound

Report of Analysis

Client Sample ID:	SS39-DPT-06C		
Lab Sample ID:	F78009-6	**Date Sampled:**	11/10/10
Matrix:	SO - Soil	**Date Received:**	11/12/10
Method:	SW846 8260B	**Percent Solids:**	85.0
Project:	Holloman AFB; Alamogordo, NM		

VOA Special List

CAS No.	Compound	Result	RL	MDL	Units	Q
124-48-1	Dibromochloromethane	ND	3.6	0.73	ug/kg	
75-71-8	Dichlorodifluoromethane	ND	3.6	1.1	ug/kg	
156-59-2	cis-1,2-Dichloroethylene	ND	3.6	1.1	ug/kg	
10061-01-5	cis-1,3-Dichloropropene	ND	3.6	0.73	ug/kg	
1476-11-5	cis-1,4-Dichloro-2-Butene	ND	18	3.6	ug/kg	
541-73-1	m-Dichlorobenzene	ND	3.6	0.87	ug/kg	
95-50-1	o-Dichlorobenzene	ND	3.6	0.80	ug/kg	
106-46-7	p-Dichlorobenzene	ND	3.6	0.80	ug/kg	
156-60-5	trans-1,2-Dichloroethylene	ND	3.6	1.1	ug/kg	
10061-02-6	trans-1,3-Dichloropropene	ND	3.6	0.80	ug/kg	
100-41-4	Ethylbenzene	ND	3.6	0.73	ug/kg	
97-63-2	Ethyl methacrylate	ND	18	3.6	ug/kg	
76-13-1	Freon 113	ND	3.6	1.2	ug/kg	
591-78-6	2-Hexanone	ND	18	3.9	ug/kg	
87-68-3	Hexachlorobutadiene	ND	3.6	1.5	ug/kg	
110-54-3	Hexane	ND	3.6	1.4	ug/kg	
98-82-8	Isopropylbenzene	ND	3.6	0.80	ug/kg	
99-87-6	p-Isopropyltoluene	ND	3.6	0.87	ug/kg	
108-10-1	4-Methyl-2-pentanone	ND	18	4.0	ug/kg	
126-98-7	Methacrylonitrile	ND	18	6.7	ug/kg	
74-83-9	Methyl bromide	ND	3.6	1.5	ug/kg	
74-87-3	Methyl chloride	ND	3.6	1.5	ug/kg	
74-88-4	Methyl iodide	ND	7.3	0.80	ug/kg	
80-62-6	Methyl methacrylate	ND	3.6	1.3	ug/kg	
74-95-3	Methylene bromide	ND	3.6	1.1	ug/kg	
75-09-2	Methylene chloride	ND	7.3	3.4	ug/kg	
78-93-3	Methyl ethyl ketone	ND	18	4.4	ug/kg	
1634-04-4	Methyl Tert Butyl Ether	ND	3.6	1.5	ug/kg	
91-20-3	Naphthalene	ND	3.6	1.5	ug/kg	
76-01-7	Pentachloroethane	ND	18	3.6	ug/kg	
107-12-0	Propionitrile	ND	36	12	ug/kg	
103-65-1	n-Propylbenzene	ND	3.6	1.0	ug/kg	
100-42-5	Styrene	ND	3.6	1.9	ug/kg	
630-20-6	1,1,1,2-Tetrachloroethane	ND	3.6	0.73	ug/kg	
71-55-6	1,1,1-Trichloroethane	ND	3.6	0.80	ug/kg	
79-34-5	1,1,2,2-Tetrachloroethane	ND	3.6	0.87	ug/kg	
79-00-5	1,1,2-Trichloroethane	ND	3.6	0.80	ug/kg	
87-61-6	1,2,3-Trichlorobenzene	ND	3.6	0.73	ug/kg	
96-18-4	1,2,3-Trichloropropane	ND	3.6	1.2	ug/kg	
120-82-1	1,2,4-Trichlorobenzene	ND	3.6	0.87	ug/kg	

ND = Not detected MDL - Method Detection Limit
RL = Reporting Limit
E = Indicates value exceeds calibration range

J = Indicates an estimated value
B = Indicates analyte found in associated method blank
N = Indicates presumptive evidence of a compound

Report of Analysis

Client Sample ID:	SS39-DPT-06C		
Lab Sample ID:	F78009-6	**Date Sampled:**	11/10/10
Matrix:	SO - Soil	**Date Received:**	11/12/10
Method:	SW846 8260B	**Percent Solids:**	85.0
Project:	Holloman AFB; Alamogordo, NM		

VOA Special List

CAS No.	Compound	Result	RL	MDL	Units	Q
95-63-6	1,2,4-Trimethylbenzene	ND	3.6	0.80	ug/kg	
108-67-8	1,3,5-Trimethylbenzene	ND	3.6	0.95	ug/kg	
127-18-4	Tetrachloroethylene	73.7	3.6	0.73	ug/kg	
108-88-3	Toluene	ND	3.6	0.87	ug/kg	
79-01-6	Trichloroethylene	ND	3.6	0.87	ug/kg	
75-69-4	Trichlorofluoromethane	ND	3.6	1.5	ug/kg	
110-57-6	Trans-1,4-Dichloro-2-Butene	ND	18	3.6	ug/kg	
75-01-4	Vinyl chloride	ND	3.6	1.1	ug/kg	
108-05-4	Vinyl Acetate	ND	18	10	ug/kg	
	m,p-Xylene	ND	7.3	1.6	ug/kg	
95-47-6	o-Xylene	ND	3.6	0.73	ug/kg	

CAS No.	Surrogate Recoveries	Run# 1	Run# 2	Limits
1868-53-7	Dibromofluoromethane	100%		80-121%
2037-26-5	Toluene-D8	81%		71-130%
460-00-4	4-Bromofluorobenzene	93%		59-148%
17060-07-0	1,2-Dichloroethane-D4	100%		77-123%

ND = Not detected MDL - Method Detection Limit
RL = Reporting Limit
E = Indicates value exceeds calibration range

J = Indicates an estimated value
B = Indicates analyte found in associated method blank
N = Indicates presumptive evidence of a compound

Report of Analysis

Client Sample ID:	SS39-DPT-06C		
Lab Sample ID:	F78009-6	**Date Sampled:**	11/10/10
Matrix:	SO - Soil	**Date Received:**	11/12/10
Method:	SW846 8015C	**Percent Solids:**	85.0
Project:	Holloman AFB; Alamogordo, NM		

	File ID	DF	Analyzed	By	Prep Date	Prep Batch	Analytical Batch
Run #1	QR056866.D	1	11/19/10	AH	n/a	n/a	GQR2473
Run #2							

	Initial Weight	Final Volume	Methanol Aliquot
Run #1	8.04 g	5.0 ml	100 ul
Run #2			

CAS No.	Compound	Result	RL	MDL	Units	Q
	TPH-GRO (C6-C10)	ND	4.5	2.3	mg/kg	

CAS No.	Surrogate Recoveries	Run# 1	Run# 2	Limits
460-00-4	4-Bromofluorobenzene	83%		56-136%
98-08-8	aaa-Trifluorotoluene	73%		61-121%

ND = Not detected MDL - Method Detection Limit
RL = Reporting Limit
E = Indicates value exceeds calibration range

J = Indicates an estimated value
B = Indicates analyte found in associated method blank
N = Indicates presumptive evidence of a compound

Report of Analysis

Client Sample ID:	SS39-DPT-07A		
Lab Sample ID:	F78009-7	**Date Sampled:**	11/11/10
Matrix:	SO - Soil	**Date Received:**	11/12/10
Method:	SW846 8260B	**Percent Solids:**	95.2
Project:	Holloman AFB; Alamogordo, NM		

	File ID	DF	Analyzed	By	Prep Date	Prep Batch	Analytical Batch
Run #1	H066155.D	1	11/18/10	MM	n/a	n/a	VH2463
Run #2							

	Initial Weight
Run #1	6.28 g
Run #2	

VOA Special List

CAS No.	Compound	Result	RL	MDL	Units	Q
67-64-1	Acetone	ND	42	17	ug/kg	
75-05-8	Acetonitrile	ND	42	15	ug/kg	
107-02-8	Acrolein	ND	21	9.2	ug/kg	
107-13-1	Acrylonitrile	ND	21	9.5	ug/kg	
107-05-1	Allyl chloride	ND	21	4.2	ug/kg	
71-43-2	Benzene	ND	4.2	1.3	ug/kg	
100-44-7	Benzyl Chloride	ND	4.2	1.3	ug/kg	
108-86-1	Bromobenzene	ND	4.2	1.2	ug/kg	
74-97-5	Bromochloromethane	ND	4.2	1.2	ug/kg	
75-27-4	Bromodichloromethane	ND	4.2	0.92	ug/kg	
75-25-2	Bromoform	ND	4.2	1.3	ug/kg	
104-51-8	n-Butylbenzene	ND	4.2	1.1	ug/kg	
135-98-8	sec-Butylbenzene	ND	4.2	1.3	ug/kg	
98-06-6	tert-Butylbenzene	ND	4.2	1.0	ug/kg	
108-90-7	Chlorobenzene	ND	4.2	0.84	ug/kg	
75-00-3	Chloroethane	ND	4.2	1.7	ug/kg	
67-66-3	Chloroform	ND	4.2	1.0	ug/kg	
544-10-5	1-Chlorohexane	ND	4.2	1.2	ug/kg	
95-49-8	o-Chlorotoluene	ND	4.2	1.0	ug/kg	
106-43-4	p-Chlorotoluene	ND	4.2	1.0	ug/kg	
110-75-8	2-Chloroethyl vinyl ether	ND	21	8.4	ug/kg	
75-15-0	Carbon disulfide	ND	4.2	1.7	ug/kg	
56-23-5	Carbon tetrachloride	ND	4.2	1.5	ug/kg	
75-34-3	1,1-Dichloroethane	ND	4.2	0.92	ug/kg	
75-35-4	1,1-Dichloroethylene	ND	4.2	1.2	ug/kg	
563-58-6	1,1-Dichloropropene	ND	4.2	1.1	ug/kg	
96-12-8	1,2-Dibromo-3-chloropropane	ND	4.2	1.9	ug/kg	
106-93-4	1,2-Dibromoethane	ND	4.2	0.84	ug/kg	
107-06-2	1,2-Dichloroethane	ND	4.2	0.84	ug/kg	
78-87-5	1,2-Dichloropropane	ND	4.2	1.0	ug/kg	
142-28-9	1,3-Dichloropropane	ND	4.2	0.84	ug/kg	
594-20-7	2,2-Dichloropropane	ND	4.2	1.2	ug/kg	

ND = Not detected MDL - Method Detection Limit
RL = Reporting Limit
E = Indicates value exceeds calibration range

J = Indicates an estimated value
B = Indicates analyte found in associated method blank
N = Indicates presumptive evidence of a compound

Report of Analysis

Client Sample ID:	SS39-DPT-07A		
Lab Sample ID:	F78009-7	**Date Sampled:**	11/11/10
Matrix:	SO - Soil	**Date Received:**	11/12/10
Method:	SW846 8260B	**Percent Solids:**	95.2
Project:	Holloman AFB; Alamogordo, NM		

VOA Special List

CAS No.	Compound	Result	RL	MDL	Units	Q
124-48-1	Dibromochloromethane	ND	4.2	0.84	ug/kg	
75-71-8	Dichlorodifluoromethane	ND	4.2	1.3	ug/kg	
156-59-2	cis-1,2-Dichloroethylene	ND	4.2	1.3	ug/kg	
10061-01-5	cis-1,3-Dichloropropene	ND	4.2	0.84	ug/kg	
1476-11-5	cis-1,4-Dichloro-2-Butene	ND	21	4.2	ug/kg	
541-73-1	m-Dichlorobenzene	ND	4.2	1.0	ug/kg	
95-50-1	o-Dichlorobenzene	ND	4.2	0.92	ug/kg	
106-46-7	p-Dichlorobenzene	ND	4.2	0.92	ug/kg	
156-60-5	trans-1,2-Dichloroethylene	ND	4.2	1.3	ug/kg	
10061-02-6	trans-1,3-Dichloropropene	ND	4.2	0.92	ug/kg	
100-41-4	Ethylbenzene	ND	4.2	0.84	ug/kg	
97-63-2	Ethyl methacrylate	ND	21	4.2	ug/kg	
76-13-1	Freon 113	ND	4.2	1.4	ug/kg	
591-78-6	2-Hexanone	ND	21	4.5	ug/kg	
87-68-3	Hexachlorobutadiene	ND	4.2	1.7	ug/kg	
110-54-3	Hexane	ND	4.2	1.6	ug/kg	
98-82-8	Isopropylbenzene	ND	4.2	0.92	ug/kg	
99-87-6	p-Isopropyltoluene	ND	4.2	1.0	ug/kg	
108-10-1	4-Methyl-2-pentanone	ND	21	4.6	ug/kg	
126-98-7	Methacrylonitrile	ND	21	7.7	ug/kg	
74-83-9	Methyl bromide	ND	4.2	1.7	ug/kg	
74-87-3	Methyl chloride	ND	4.2	1.7	ug/kg	
74-88-4	Methyl iodide	ND	8.4	0.92	ug/kg	
80-62-6	Methyl methacrylate	ND	4.2	1.5	ug/kg	
74-95-3	Methylene bromide	ND	4.2	1.3	ug/kg	
75-09-2	Methylene chloride	ND	8.4	3.8	ug/kg	
78-93-3	Methyl ethyl ketone	ND	21	5.1	ug/kg	
1634-04-4	Methyl Tert Butyl Ether	ND	4.2	1.7	ug/kg	
91-20-3	Naphthalene	ND	4.2	1.7	ug/kg	
76-01-7	Pentachloroethane	ND	21	4.2	ug/kg	
107-12-0	Propionitrile	ND	42	13	ug/kg	
103-65-1	n-Propylbenzene	ND	4.2	1.2	ug/kg	
100-42-5	Styrene	ND	4.2	2.2	ug/kg	
630-20-6	1,1,1,2-Tetrachloroethane	ND	4.2	0.84	ug/kg	
71-55-6	1,1,1-Trichloroethane	ND	4.2	0.92	ug/kg	
79-34-5	1,1,2,2-Tetrachloroethane	ND	4.2	1.0	ug/kg	
79-00-5	1,1,2-Trichloroethane	ND	4.2	0.92	ug/kg	
87-61-6	1,2,3-Trichlorobenzene	ND	4.2	0.84	ug/kg	
96-18-4	1,2,3-Trichloropropane	ND	4.2	1.4	ug/kg	
120-82-1	1,2,4-Trichlorobenzene	ND	4.2	1.0	ug/kg	

ND = Not detected MDL - Method Detection Limit
RL = Reporting Limit
E = Indicates value exceeds calibration range

J = Indicates an estimated value
B = Indicates analyte found in associated method blank
N = Indicates presumptive evidence of a compound

Report of Analysis

Client Sample ID:	SS39-DPT-07A		
Lab Sample ID:	F78009-7	**Date Sampled:**	11/11/10
Matrix:	SO - Soil	**Date Received:**	11/12/10
Method:	SW846 8260B	**Percent Solids:**	95.2
Project:	Holloman AFB; Alamogordo, NM		

VOA Special List

CAS No.	Compound	Result	RL	MDL	Units	Q
95-63-6	1,2,4-Trimethylbenzene	ND	4.2	0.92	ug/kg	
108-67-8	1,3,5-Trimethylbenzene	ND	4.2	1.1	ug/kg	
127-18-4	Tetrachloroethylene	3.1	4.2	0.84	ug/kg	J
108-88-3	Toluene	ND	4.2	1.0	ug/kg	
79-01-6	Trichloroethylene	ND	4.2	1.0	ug/kg	
75-69-4	Trichlorofluoromethane	ND	4.2	1.7	ug/kg	
110-57-6	Trans-1,4-Dichloro-2-Butene	ND	21	4.2	ug/kg	
75-01-4	Vinyl chloride	ND	4.2	1.3	ug/kg	
108-05-4	Vinyl Acetate	ND	21	12	ug/kg	
	m,p-Xylene	ND	8.4	1.8	ug/kg	
95-47-6	o-Xylene	ND	4.2	0.84	ug/kg	

CAS No.	Surrogate Recoveries	Run# 1	Run# 2	Limits
1868-53-7	Dibromofluoromethane	100%		80-121%
2037-26-5	Toluene-D8	80%		71-130%
460-00-4	4-Bromofluorobenzene	97%		59-148%
17060-07-0	1,2-Dichloroethane-D4	102%		77-123%

ND = Not detected MDL - Method Detection Limit
RL = Reporting Limit
E = Indicates value exceeds calibration range

J = Indicates an estimated value
B = Indicates analyte found in associated method blank
N = Indicates presumptive evidence of a compound

Report of Analysis

Client Sample ID:	SS39-DPT-07A		
Lab Sample ID:	F78009-7	**Date Sampled:**	11/11/10
Matrix:	SO - Soil	**Date Received:**	11/12/10
Method:	SW846 8015C	**Percent Solids:**	95.2
Project:	Holloman AFB; Alamogordo, NM		

	File ID	DF	Analyzed	By	Prep Date	Prep Batch	Analytical Batch
Run #1	QR056867.D	1	11/19/10	AH	n/a	n/a	GQR2473
Run #2							

	Initial Weight	Final Volume	Methanol Aliquot
Run #1	5.73 g	5.0 ml	100 ul
Run #2			

CAS No.	Compound	Result	RL	MDL	Units	Q
	TPH-GRO (C6-C10)	ND	4.8	2.4	mg/kg	

CAS No.	Surrogate Recoveries	Run# 1	Run# 2	Limits
460-00-4	4-Bromofluorobenzene	84%		56-136%
98-08-8	aaa-Trifluorotoluene	76%		61-121%

ND = Not detected MDL - Method Detection Limit
RL = Reporting Limit
E = Indicates value exceeds calibration range

J = Indicates an estimated value
B = Indicates analyte found in associated method blank
N = Indicates presumptive evidence of a compound

Report of Analysis

Client Sample ID:	SS39-DPT-07B		
Lab Sample ID:	F78009-8	**Date Sampled:**	11/11/10
Matrix:	SO - Soil	**Date Received:**	11/12/10
Method:	SW846 8260B	**Percent Solids:**	96.7
Project:	Holloman AFB; Alamogordo, NM		

	File ID	DF	Analyzed	By	Prep Date	Prep Batch	Analytical Batch
Run #1	H066156.D	1	11/18/10	MM	n/a	n/a	VH2463
Run #2							

	Initial Weight
Run #1	6.58 g
Run #2	

VOA Special List

CAS No.	Compound	Result	RL	MDL	Units	Q
67-64-1	Acetone	ND	39	16	ug/kg	
75-05-8	Acetonitrile	ND	39	14	ug/kg	
107-02-8	Acrolein	ND	20	8.6	ug/kg	
107-13-1	Acrylonitrile	ND	20	9.0	ug/kg	
107-05-1	Allyl chloride	ND	20	3.9	ug/kg	
71-43-2	Benzene	ND	3.9	1.2	ug/kg	
100-44-7	Benzyl Chloride	ND	3.9	1.2	ug/kg	
108-86-1	Bromobenzene	ND	3.9	1.1	ug/kg	
74-97-5	Bromochloromethane	ND	3.9	1.1	ug/kg	
75-27-4	Bromodichloromethane	ND	3.9	0.86	ug/kg	
75-25-2	Bromoform	ND	3.9	1.2	ug/kg	
104-51-8	n-Butylbenzene	ND	3.9	1.0	ug/kg	
135-98-8	sec-Butylbenzene	ND	3.9	1.3	ug/kg	
98-06-6	tert-Butylbenzene	ND	3.9	0.94	ug/kg	
108-90-7	Chlorobenzene	ND	3.9	0.79	ug/kg	
75-00-3	Chloroethane	ND	3.9	1.6	ug/kg	
67-66-3	Chloroform	ND	3.9	0.94	ug/kg	
544-10-5	1-Chlorohexane	ND	3.9	1.1	ug/kg	
95-49-8	o-Chlorotoluene	ND	3.9	0.94	ug/kg	
106-43-4	p-Chlorotoluene	ND	3.9	0.94	ug/kg	
110-75-8	2-Chloroethyl vinyl ether	ND	20	7.9	ug/kg	
75-15-0	Carbon disulfide	ND	3.9	1.6	ug/kg	
56-23-5	Carbon tetrachloride	ND	3.9	1.4	ug/kg	
75-34-3	1,1-Dichloroethane	ND	3.9	0.86	ug/kg	
75-35-4	1,1-Dichloroethylene	ND	3.9	1.1	ug/kg	
563-58-6	1,1-Dichloropropene	ND	3.9	1.0	ug/kg	
96-12-8	1,2-Dibromo-3-chloropropane	ND	3.9	1.8	ug/kg	
106-93-4	1,2-Dibromoethane	ND	3.9	0.79	ug/kg	
107-06-2	1,2-Dichloroethane	ND	3.9	0.79	ug/kg	
78-87-5	1,2-Dichloropropane	ND	3.9	0.94	ug/kg	
142-28-9	1,3-Dichloropropane	ND	3.9	0.79	ug/kg	
594-20-7	2,2-Dichloropropane	ND	3.9	1.1	ug/kg	

ND = Not detected MDL - Method Detection Limit
RL = Reporting Limit
E = Indicates value exceeds calibration range

J = Indicates an estimated value
B = Indicates analyte found in associated method blank
N = Indicates presumptive evidence of a compound

Report of Analysis

Client Sample ID:	SS39-DPT-07B		
Lab Sample ID:	F78009-8	**Date Sampled:**	11/11/10
Matrix:	SO - Soil	**Date Received:**	11/12/10
Method:	SW846 8260B	**Percent Solids:**	96.7
Project:	Holloman AFB; Alamogordo, NM		

VOA Special List

CAS No.	Compound	Result	RL	MDL	Units	Q
124-48-1	Dibromochloromethane	ND	3.9	0.79	ug/kg	
75-71-8	Dichlorodifluoromethane	ND	3.9	1.2	ug/kg	
156-59-2	cis-1,2-Dichloroethylene	ND	3.9	1.2	ug/kg	
10061-01-5	cis-1,3-Dichloropropene	ND	3.9	0.79	ug/kg	
1476-11-5	cis-1,4-Dichloro-2-Butene	ND	20	3.9	ug/kg	
541-73-1	m-Dichlorobenzene	ND	3.9	0.94	ug/kg	
95-50-1	o-Dichlorobenzene	ND	3.9	0.86	ug/kg	
106-46-7	p-Dichlorobenzene	ND	3.9	0.86	ug/kg	
156-60-5	trans-1,2-Dichloroethylene	ND	3.9	1.2	ug/kg	
10061-02-6	trans-1,3-Dichloropropene	ND	3.9	0.86	ug/kg	
100-41-4	Ethylbenzene	ND	3.9	0.79	ug/kg	
97-63-2	Ethyl methacrylate	ND	20	3.9	ug/kg	
76-13-1	Freon 113	ND	3.9	1.3	ug/kg	
591-78-6	2-Hexanone	ND	20	4.2	ug/kg	
87-68-3	Hexachlorobutadiene	ND	3.9	1.6	ug/kg	
110-54-3	Hexane	ND	3.9	1.5	ug/kg	
98-82-8	Isopropylbenzene	ND	3.9	0.86	ug/kg	
99-87-6	p-Isopropyltoluene	ND	3.9	0.94	ug/kg	
108-10-1	4-Methyl-2-pentanone	ND	20	4.3	ug/kg	
126-98-7	Methacrylonitrile	ND	20	7.2	ug/kg	
74-83-9	Methyl bromide	ND	3.9	1.6	ug/kg	
74-87-3	Methyl chloride	ND	3.9	1.6	ug/kg	
74-88-4	Methyl iodide	ND	7.9	0.86	ug/kg	
80-62-6	Methyl methacrylate	ND	3.9	1.4	ug/kg	
74-95-3	Methylene bromide	ND	3.9	1.2	ug/kg	
75-09-2	Methylene chloride	ND	7.9	3.6	ug/kg	
78-93-3	Methyl ethyl ketone	ND	20	4.8	ug/kg	
1634-04-4	Methyl Tert Butyl Ether	ND	3.9	1.6	ug/kg	
91-20-3	Naphthalene	ND	3.9	1.6	ug/kg	
76-01-7	Pentachloroethane	ND	20	3.9	ug/kg	
107-12-0	Propionitrile	ND	39	12	ug/kg	
103-65-1	n-Propylbenzene	ND	3.9	1.1	ug/kg	
100-42-5	Styrene	ND	3.9	2.0	ug/kg	
630-20-6	1,1,1,2-Tetrachloroethane	ND	3.9	0.79	ug/kg	
71-55-6	1,1,1-Trichloroethane	ND	3.9	0.86	ug/kg	
79-34-5	1,1,2,2-Tetrachloroethane	ND	3.9	0.94	ug/kg	
79-00-5	1,1,2-Trichloroethane	ND	3.9	0.86	ug/kg	
87-61-6	1,2,3-Trichlorobenzene	ND	3.9	0.79	ug/kg	
96-18-4	1,2,3-Trichloropropane	ND	3.9	1.3	ug/kg	
120-82-1	1,2,4-Trichlorobenzene	ND	3.9	0.94	ug/kg	

ND = Not detected MDL - Method Detection Limit
RL = Reporting Limit
E = Indicates value exceeds calibration range

J = Indicates an estimated value
B = Indicates analyte found in associated method blank
N = Indicates presumptive evidence of a compound

Report of Analysis

Client Sample ID:	SS39-DPT-07B		
Lab Sample ID:	F78009-8	**Date Sampled:**	11/11/10
Matrix:	SO - Soil	**Date Received:**	11/12/10
Method:	SW846 8260B	**Percent Solids:**	96.7
Project:	Holloman AFB; Alamogordo, NM		

VOA Special List

CAS No.	Compound	Result	RL	MDL	Units	Q
95-63-6	1,2,4-Trimethylbenzene	ND	3.9	0.86	ug/kg	
108-67-8	1,3,5-Trimethylbenzene	ND	3.9	1.0	ug/kg	
127-18-4	Tetrachloroethylene	0.96	3.9	0.79	ug/kg	J
108-88-3	Toluene	ND	3.9	0.94	ug/kg	
79-01-6	Trichloroethylene	ND	3.9	0.94	ug/kg	
75-69-4	Trichlorofluoromethane	ND	3.9	1.6	ug/kg	
110-57-6	Trans-1,4-Dichloro-2-Butene	ND	20	3.9	ug/kg	
75-01-4	Vinyl chloride	ND	3.9	1.2	ug/kg	
108-05-4	Vinyl Acetate	ND	20	11	ug/kg	
	m,p-Xylene	ND	7.9	1.7	ug/kg	
95-47-6	o-Xylene	ND	3.9	0.79	ug/kg	

CAS No.	Surrogate Recoveries	Run# 1	Run# 2	Limits
1868-53-7	Dibromofluoromethane	102%		80-121%
2037-26-5	Toluene-D8	80%		71-130%
460-00-4	4-Bromofluorobenzene	93%		59-148%
17060-07-0	1,2-Dichloroethane-D4	99%		77-123%

ND = Not detected MDL - Method Detection Limit
RL = Reporting Limit
E = Indicates value exceeds calibration range

J = Indicates an estimated value
B = Indicates analyte found in associated method blank
N = Indicates presumptive evidence of a compound

Report of Analysis

Client Sample ID:	SS39-DPT-07B		
Lab Sample ID:	F78009-8	**Date Sampled:**	11/11/10
Matrix:	SO - Soil	**Date Received:**	11/12/10
Method:	SW846 8015C	**Percent Solids:**	96.7
Project:	Holloman AFB; Alamogordo, NM		

	File ID	DF	Analyzed	By	Prep Date	Prep Batch	Analytical Batch
Run #1	QR056870.D	1	11/19/10	AH	n/a	n/a	GQR2473
Run #2							

	Initial Weight	Final Volume	Methanol Aliquot
Run #1	6.29 g	5.0 ml	100 ul
Run #2			

CAS No.	Compound	Result	RL	MDL	Units	Q
	TPH-GRO (C6-C10)	ND	4.3	2.1	mg/kg	

CAS No.	Surrogate Recoveries	Run# 1	Run# 2	Limits
460-00-4	4-Bromofluorobenzene	79%		56-136%
98-08-8	aaa-Trifluorotoluene	71%		61-121%

ND = Not detected MDL - Method Detection Limit
RL = Reporting Limit
E = Indicates value exceeds calibration range

J = Indicates an estimated value
B = Indicates analyte found in associated method blank
N = Indicates presumptive evidence of a compound

Report of Analysis

Client Sample ID:	SS39-DPT-07C		
Lab Sample ID:	F78009-9	**Date Sampled:**	11/11/10
Matrix:	SO - Soil	**Date Received:**	11/12/10
Method:	SW846 8260B	**Percent Solids:**	95.1
Project:	Holloman AFB; Alamogordo, NM		

	File ID	DF	Analyzed	By	Prep Date	Prep Batch	Analytical Batch
Run #1	H066157.D	1	11/18/10	MM	n/a	n/a	VH2463
Run #2							

	Initial Weight
Run #1	6.67 g
Run #2	

VOA Special List

CAS No.	Compound	Result	RL	MDL	Units	Q
67-64-1	Acetone	ND	39	16	ug/kg	
75-05-8	Acetonitrile	ND	39	14	ug/kg	
107-02-8	Acrolein	ND	20	8.7	ug/kg	
107-13-1	Acrylonitrile	ND	20	9.0	ug/kg	
107-05-1	Allyl chloride	ND	20	3.9	ug/kg	
71-43-2	Benzene	ND	3.9	1.2	ug/kg	
100-44-7	Benzyl Chloride	ND	3.9	1.2	ug/kg	
108-86-1	Bromobenzene	ND	3.9	1.1	ug/kg	
74-97-5	Bromochloromethane	ND	3.9	1.1	ug/kg	
75-27-4	Bromodichloromethane	ND	3.9	0.87	ug/kg	
75-25-2	Bromoform	ND	3.9	1.2	ug/kg	
104-51-8	n-Butylbenzene	ND	3.9	1.0	ug/kg	
135-98-8	sec-Butylbenzene	ND	3.9	1.3	ug/kg	
98-06-6	tert-Butylbenzene	ND	3.9	0.95	ug/kg	
108-90-7	Chlorobenzene	ND	3.9	0.79	ug/kg	
75-00-3	Chloroethane	ND	3.9	1.6	ug/kg	
67-66-3	Chloroform	ND	3.9	0.95	ug/kg	
544-10-5	1-Chlorohexane	ND	3.9	1.1	ug/kg	
95-49-8	o-Chlorotoluene	ND	3.9	0.95	ug/kg	
106-43-4	p-Chlorotoluene	ND	3.9	0.95	ug/kg	
110-75-8	2-Chloroethyl vinyl ether	ND	20	7.9	ug/kg	
75-15-0	Carbon disulfide	ND	3.9	1.6	ug/kg	
56-23-5	Carbon tetrachloride	ND	3.9	1.4	ug/kg	
75-34-3	1,1-Dichloroethane	ND	3.9	0.87	ug/kg	
75-35-4	1,1-Dichloroethylene	ND	3.9	1.1	ug/kg	
563-58-6	1,1-Dichloropropene	ND	3.9	1.0	ug/kg	
96-12-8	1,2-Dibromo-3-chloropropane	ND	3.9	1.8	ug/kg	
106-93-4	1,2-Dibromoethane	ND	3.9	0.79	ug/kg	
107-06-2	1,2-Dichloroethane	ND	3.9	0.79	ug/kg	
78-87-5	1,2-Dichloropropane	ND	3.9	0.95	ug/kg	
142-28-9	1,3-Dichloropropane	ND	3.9	0.79	ug/kg	
594-20-7	2,2-Dichloropropane	ND	3.9	1.1	ug/kg	

ND = Not detected MDL - Method Detection Limit
RL = Reporting Limit
E = Indicates value exceeds calibration range

J = Indicates an estimated value
B = Indicates analyte found in associated method blank
N = Indicates presumptive evidence of a compound

Report of Analysis

Client Sample ID:	SS39-DPT-07C		
Lab Sample ID:	F78009-9	**Date Sampled:**	11/11/10
Matrix:	SO - Soil	**Date Received:**	11/12/10
Method:	SW846 8260B	**Percent Solids:**	95.1
Project:	Holloman AFB; Alamogordo, NM		

VOA Special List

CAS No.	Compound	Result	RL	MDL	Units	Q
124-48-1	Dibromochloromethane	ND	3.9	0.79	ug/kg	
75-71-8	Dichlorodifluoromethane	ND	3.9	1.2	ug/kg	
156-59-2	cis-1,2-Dichloroethylene	ND	3.9	1.2	ug/kg	
10061-01-5	cis-1,3-Dichloropropene	ND	3.9	0.79	ug/kg	
1476-11-5	cis-1,4-Dichloro-2-Butene	ND	20	3.9	ug/kg	
541-73-1	m-Dichlorobenzene	ND	3.9	0.95	ug/kg	
95-50-1	o-Dichlorobenzene	ND	3.9	0.87	ug/kg	
106-46-7	p-Dichlorobenzene	ND	3.9	0.87	ug/kg	
156-60-5	trans-1,2-Dichloroethylene	ND	3.9	1.2	ug/kg	
10061-02-6	trans-1,3-Dichloropropene	ND	3.9	0.87	ug/kg	
100-41-4	Ethylbenzene	ND	3.9	0.79	ug/kg	
97-63-2	Ethyl methacrylate	ND	20	3.9	ug/kg	
76-13-1	Freon 113	ND	3.9	1.3	ug/kg	
591-78-6	2-Hexanone	ND	20	4.3	ug/kg	
87-68-3	Hexachlorobutadiene	ND	3.9	1.6	ug/kg	
110-54-3	Hexane	ND	3.9	1.5	ug/kg	
98-82-8	Isopropylbenzene	ND	3.9	0.87	ug/kg	
99-87-6	p-Isopropyltoluene	ND	3.9	0.95	ug/kg	
108-10-1	4-Methyl-2-pentanone	ND	20	4.3	ug/kg	
126-98-7	Methacrylonitrile	ND	20	7.3	ug/kg	
74-83-9	Methyl bromide	ND	3.9	1.6	ug/kg	
74-87-3	Methyl chloride	ND	3.9	1.6	ug/kg	
74-88-4	Methyl iodide	ND	7.9	0.87	ug/kg	
80-62-6	Methyl methacrylate	ND	3.9	1.4	ug/kg	
74-95-3	Methylene bromide	ND	3.9	1.2	ug/kg	
75-09-2	Methylene chloride [a]	13.8	7.9	3.6	ug/kg	
78-93-3	Methyl ethyl ketone	ND	20	4.8	ug/kg	
1634-04-4	Methyl Tert Butyl Ether	ND	3.9	1.6	ug/kg	
91-20-3	Naphthalene	ND	3.9	1.6	ug/kg	
76-01-7	Pentachloroethane	ND	20	3.9	ug/kg	
107-12-0	Propionitrile	ND	39	13	ug/kg	
103-65-1	n-Propylbenzene	ND	3.9	1.1	ug/kg	
100-42-5	Styrene	ND	3.9	2.0	ug/kg	
630-20-6	1,1,1,2-Tetrachloroethane	ND	3.9	0.79	ug/kg	
71-55-6	1,1,1-Trichloroethane	ND	3.9	0.87	ug/kg	
79-34-5	1,1,2,2-Tetrachloroethane	ND	3.9	0.95	ug/kg	
79-00-5	1,1,2-Trichloroethane	ND	3.9	0.87	ug/kg	
87-61-6	1,2,3-Trichlorobenzene	ND	3.9	0.79	ug/kg	
96-18-4	1,2,3-Trichloropropane	ND	3.9	1.3	ug/kg	
120-82-1	1,2,4-Trichlorobenzene	ND	3.9	0.95	ug/kg	

ND = Not detected MDL - Method Detection Limit
RL = Reporting Limit
E = Indicates value exceeds calibration range

J = Indicates an estimated value
B = Indicates analyte found in associated method blank
N = Indicates presumptive evidence of a compound

Report of Analysis

Client Sample ID:	SS39-DPT-07C		
Lab Sample ID:	F78009-9	**Date Sampled:**	11/11/10
Matrix:	SO - Soil	**Date Received:**	11/12/10
Method:	SW846 8260B	**Percent Solids:**	95.1
Project:	Holloman AFB; Alamogordo, NM		

VOA Special List

CAS No.	Compound	Result	RL	MDL	Units	Q
95-63-6	1,2,4-Trimethylbenzene	ND	3.9	0.87	ug/kg	
108-67-8	1,3,5-Trimethylbenzene	ND	3.9	1.0	ug/kg	
127-18-4	Tetrachloroethylene	1.5	3.9	0.79	ug/kg	J
108-88-3	Toluene	ND	3.9	0.95	ug/kg	
79-01-6	Trichloroethylene	ND	3.9	0.95	ug/kg	
75-69-4	Trichlorofluoromethane	ND	3.9	1.6	ug/kg	
110-57-6	Trans-1,4-Dichloro-2-Butene	ND	20	3.9	ug/kg	
75-01-4	Vinyl chloride	ND	3.9	1.2	ug/kg	
108-05-4	Vinyl Acetate	ND	20	11	ug/kg	
	m,p-Xylene	ND	7.9	1.7	ug/kg	
95-47-6	o-Xylene	ND	3.9	0.79	ug/kg	

CAS No.	Surrogate Recoveries	Run# 1	Run# 2	Limits
1868-53-7	Dibromofluoromethane	101%		80-121%
2037-26-5	Toluene-D8	78%		71-130%
460-00-4	4-Bromofluorobenzene	95%		59-148%
17060-07-0	1,2-Dichloroethane-D4	98%		77-123%

(a) ICV and BS outside of control limits. Suspected laboratory contaminant.

ND = Not detected MDL - Method Detection Limit
RL = Reporting Limit
E = Indicates value exceeds calibration range

J = Indicates an estimated value
B = Indicates analyte found in associated method blank
N = Indicates presumptive evidence of a compound

Report of Analysis

Client Sample ID:	SS39-DPT-07C		
Lab Sample ID:	F78009-9	**Date Sampled:**	11/11/10
Matrix:	SO - Soil	**Date Received:**	11/12/10
Method:	SW846 8015C	**Percent Solids:**	95.1
Project:	Holloman AFB; Alamogordo, NM		

	File ID	DF	Analyzed	By	Prep Date	Prep Batch	Analytical Batch
Run #1	QR056871.D	1	11/19/10	AH	n/a	n/a	GQR2473
Run #2							

	Initial Weight	Final Volume	Methanol Aliquot
Run #1	5.89 g	5.0 ml	100 ul
Run #2			

CAS No.	Compound	Result	RL	MDL	Units	Q
	TPH-GRO (C6-C10)	ND	4.7	2.4	mg/kg	

CAS No.	Surrogate Recoveries	Run# 1	Run# 2	Limits
460-00-4	4-Bromofluorobenzene	84%		56-136%
98-08-8	aaa-Trifluorotoluene	74%		61-121%

ND = Not detected MDL - Method Detection Limit
RL = Reporting Limit
E = Indicates value exceeds calibration range

J = Indicates an estimated value
B = Indicates analyte found in associated method blank
N = Indicates presumptive evidence of a compound

Report of Analysis

Client Sample ID:	SS39-DPT-08A		
Lab Sample ID:	F78009-10	**Date Sampled:**	11/11/10
Matrix:	SO - Soil	**Date Received:**	11/12/10
Method:	SW846 8260B	**Percent Solids:**	95.8
Project:	Holloman AFB; Alamogordo, NM		

	File ID	DF	Analyzed	By	Prep Date	Prep Batch	Analytical Batch
Run #1	H066158.D	1	11/18/10	MM	n/a	n/a	VH2463
Run #2							

	Initial Weight
Run #1	4.48 g
Run #2	

VOA Special List

CAS No.	Compound	Result	RL	MDL	Units	Q
67-64-1	Acetone	ND	58	23	ug/kg	
75-05-8	Acetonitrile	ND	58	21	ug/kg	
107-02-8	Acrolein	ND	29	13	ug/kg	
107-13-1	Acrylonitrile	ND	29	13	ug/kg	
107-05-1	Allyl chloride	ND	29	5.8	ug/kg	
71-43-2	Benzene	ND	5.8	1.7	ug/kg	
100-44-7	Benzyl Chloride	ND	5.8	1.7	ug/kg	
108-86-1	Bromobenzene	ND	5.8	1.6	ug/kg	
74-97-5	Bromochloromethane	ND	5.8	1.6	ug/kg	
75-27-4	Bromodichloromethane	ND	5.8	1.3	ug/kg	
75-25-2	Bromoform	ND	5.8	1.7	ug/kg	
104-51-8	n-Butylbenzene	ND	5.8	1.5	ug/kg	
135-98-8	sec-Butylbenzene	ND	5.8	1.9	ug/kg	
98-06-6	tert-Butylbenzene	ND	5.8	1.4	ug/kg	
108-90-7	Chlorobenzene	ND	5.8	1.2	ug/kg	
75-00-3	Chloroethane	ND	5.8	2.3	ug/kg	
67-66-3	Chloroform	ND	5.8	1.4	ug/kg	
544-10-5	1-Chlorohexane	ND	5.8	1.6	ug/kg	
95-49-8	o-Chlorotoluene	ND	5.8	1.4	ug/kg	
106-43-4	p-Chlorotoluene	ND	5.8	1.4	ug/kg	
110-75-8	2-Chloroethyl vinyl ether	ND	29	12	ug/kg	
75-15-0	Carbon disulfide	ND	5.8	2.3	ug/kg	
56-23-5	Carbon tetrachloride	ND	5.8	2.1	ug/kg	
75-34-3	1,1-Dichloroethane	ND	5.8	1.3	ug/kg	
75-35-4	1,1-Dichloroethylene	ND	5.8	1.6	ug/kg	
563-58-6	1,1-Dichloropropene	ND	5.8	1.5	ug/kg	
96-12-8	1,2-Dibromo-3-chloropropane	ND	5.8	2.7	ug/kg	
106-93-4	1,2-Dibromoethane	ND	5.8	1.2	ug/kg	
107-06-2	1,2-Dichloroethane	ND	5.8	1.2	ug/kg	
78-87-5	1,2-Dichloropropane	ND	5.8	1.4	ug/kg	
142-28-9	1,3-Dichloropropane	ND	5.8	1.2	ug/kg	
594-20-7	2,2-Dichloropropane	ND	5.8	1.6	ug/kg	

ND = Not detected MDL - Method Detection Limit
RL = Reporting Limit
E = Indicates value exceeds calibration range

J = Indicates an estimated value
B = Indicates analyte found in associated method blank
N = Indicates presumptive evidence of a compound

Report of Analysis

Client Sample ID:	SS39-DPT-08A		
Lab Sample ID:	F78009-10	**Date Sampled:**	11/11/10
Matrix:	SO - Soil	**Date Received:**	11/12/10
Method:	SW846 8260B	**Percent Solids:**	95.8
Project:	Holloman AFB; Alamogordo, NM		

VOA Special List

CAS No.	Compound	Result	RL	MDL	Units	Q
124-48-1	Dibromochloromethane	ND	5.8	1.2	ug/kg	
75-71-8	Dichlorodifluoromethane	ND	5.8	1.7	ug/kg	
156-59-2	cis-1,2-Dichloroethylene	ND	5.8	1.7	ug/kg	
10061-01-5	cis-1,3-Dichloropropene	ND	5.8	1.2	ug/kg	
1476-11-5	cis-1,4-Dichloro-2-Butene	ND	29	5.8	ug/kg	
541-73-1	m-Dichlorobenzene	ND	5.8	1.4	ug/kg	
95-50-1	o-Dichlorobenzene	ND	5.8	1.3	ug/kg	
106-46-7	p-Dichlorobenzene	ND	5.8	1.3	ug/kg	
156-60-5	trans-1,2-Dichloroethylene	ND	5.8	1.7	ug/kg	
10061-02-6	trans-1,3-Dichloropropene	ND	5.8	1.3	ug/kg	
100-41-4	Ethylbenzene	ND	5.8	1.2	ug/kg	
97-63-2	Ethyl methacrylate	ND	29	5.8	ug/kg	
76-13-1	Freon 113	ND	5.8	2.0	ug/kg	
591-78-6	2-Hexanone	ND	29	6.3	ug/kg	
87-68-3	Hexachlorobutadiene	ND	5.8	2.3	ug/kg	
110-54-3	Hexane	ND	5.8	2.2	ug/kg	
98-82-8	Isopropylbenzene	ND	5.8	1.3	ug/kg	
99-87-6	p-Isopropyltoluene	ND	5.8	1.4	ug/kg	
108-10-1	4-Methyl-2-pentanone	ND	29	6.4	ug/kg	
126-98-7	Methacrylonitrile	ND	29	11	ug/kg	
74-83-9	Methyl bromide	ND	5.8	2.3	ug/kg	
74-87-3	Methyl chloride	ND	5.8	2.3	ug/kg	
74-88-4	Methyl iodide	ND	12	1.3	ug/kg	
80-62-6	Methyl methacrylate	ND	5.8	2.1	ug/kg	
74-95-3	Methylene bromide	ND	5.8	1.7	ug/kg	
75-09-2	Methylene chloride	ND	12	5.4	ug/kg	
78-93-3	Methyl ethyl ketone	ND	29	7.1	ug/kg	
1634-04-4	Methyl Tert Butyl Ether	ND	5.8	2.3	ug/kg	
91-20-3	Naphthalene	ND	5.8	2.3	ug/kg	
76-01-7	Pentachloroethane	ND	29	5.8	ug/kg	
107-12-0	Propionitrile	ND	58	19	ug/kg	
103-65-1	n-Propylbenzene	ND	5.8	1.6	ug/kg	
100-42-5	Styrene	ND	5.8	3.0	ug/kg	
630-20-6	1,1,1,2-Tetrachloroethane	ND	5.8	1.2	ug/kg	
71-55-6	1,1,1-Trichloroethane	ND	5.8	1.3	ug/kg	
79-34-5	1,1,2,2-Tetrachloroethane	ND	5.8	1.4	ug/kg	
79-00-5	1,1,2-Trichloroethane	ND	5.8	1.3	ug/kg	
87-61-6	1,2,3-Trichlorobenzene	ND	5.8	1.2	ug/kg	
96-18-4	1,2,3-Trichloropropane	ND	5.8	2.0	ug/kg	
120-82-1	1,2,4-Trichlorobenzene	ND	5.8	1.4	ug/kg	

ND = Not detected MDL - Method Detection Limit
RL = Reporting Limit
E = Indicates value exceeds calibration range

J = Indicates an estimated value
B = Indicates analyte found in associated method blank
N = Indicates presumptive evidence of a compound

Report of Analysis

Client Sample ID:	SS39-DPT-08A		
Lab Sample ID:	F78009-10	**Date Sampled:**	11/11/10
Matrix:	SO - Soil	**Date Received:**	11/12/10
Method:	SW846 8260B	**Percent Solids:**	95.8
Project:	Holloman AFB; Alamogordo, NM		

VOA Special List

CAS No.	Compound	Result	RL	MDL	Units	Q
95-63-6	1,2,4-Trimethylbenzene	ND	5.8	1.3	ug/kg	
108-67-8	1,3,5-Trimethylbenzene	ND	5.8	1.5	ug/kg	
127-18-4	Tetrachloroethylene	4.5	5.8	1.2	ug/kg	J
108-88-3	Toluene	ND	5.8	1.4	ug/kg	
79-01-6	Trichloroethylene	ND	5.8	1.4	ug/kg	
75-69-4	Trichlorofluoromethane	ND	5.8	2.3	ug/kg	
110-57-6	Trans-1,4-Dichloro-2-Butene	ND	29	5.8	ug/kg	
75-01-4	Vinyl chloride	ND	5.8	1.7	ug/kg	
108-05-4	Vinyl Acetate	ND	29	16	ug/kg	
	m,p-Xylene	ND	12	2.6	ug/kg	
95-47-6	o-Xylene	ND	5.8	1.2	ug/kg	

CAS No.	Surrogate Recoveries	Run# 1	Run# 2	Limits
1868-53-7	Dibromofluoromethane	105%		80-121%
2037-26-5	Toluene-D8	78%		71-130%
460-00-4	4-Bromofluorobenzene	93%		59-148%
17060-07-0	1,2-Dichloroethane-D4	106%		77-123%

ND = Not detected MDL - Method Detection Limit
RL = Reporting Limit
E = Indicates value exceeds calibration range

J = Indicates an estimated value
B = Indicates analyte found in associated method blank
N = Indicates presumptive evidence of a compound

Report of Analysis

Client Sample ID:	SS39-DPT-08A		
Lab Sample ID:	F78009-10	**Date Sampled:**	11/11/10
Matrix:	SO - Soil	**Date Received:**	11/12/10
Method:	SW846 8015C	**Percent Solids:**	95.8
Project:	Holloman AFB; Alamogordo, NM		

	File ID	DF	Analyzed	By	Prep Date	Prep Batch	Analytical Batch
Run #1	QR056872.D	1	11/19/10	AH	n/a	n/a	GQR2473
Run #2							

	Initial Weight	Final Volume	Methanol Aliquot
Run #1	6.18 g	5.0 ml	100 ul
Run #2			

CAS No.	Compound	Result	RL	MDL	Units	Q
	TPH-GRO (C6-C10)	ND	4.4	2.2	mg/kg	

CAS No.	Surrogate Recoveries	Run# 1	Run# 2	Limits
460-00-4	4-Bromofluorobenzene	80%		56-136%
98-08-8	aaa-Trifluorotoluene	74%		61-121%

ND = Not detected MDL - Method Detection Limit
RL = Reporting Limit
E = Indicates value exceeds calibration range

J = Indicates an estimated value
B = Indicates analyte found in associated method blank
N = Indicates presumptive evidence of a compound

Report of Analysis

Client Sample ID:	SS39-DPT-08B		
Lab Sample ID:	F78009-11	**Date Sampled:**	11/11/10
Matrix:	SO - Soil	**Date Received:**	11/12/10
Method:	SW846 8260B	**Percent Solids:**	91.7
Project:	Holloman AFB; Alamogordo, NM		

	File ID	DF	Analyzed	By	Prep Date	Prep Batch	Analytical Batch
Run #1	H066159.D	1	11/18/10	MM	n/a	n/a	VH2463
Run #2							

	Initial Weight
Run #1	5.63 g
Run #2	

VOA Special List

CAS No.	Compound	Result	RL	MDL	Units	Q
67-64-1	Acetone	ND	48	19	ug/kg	
75-05-8	Acetonitrile	ND	48	17	ug/kg	
107-02-8	Acrolein	ND	24	11	ug/kg	
107-13-1	Acrylonitrile	ND	24	11	ug/kg	
107-05-1	Allyl chloride	ND	24	4.8	ug/kg	
71-43-2	Benzene	ND	4.8	1.5	ug/kg	
100-44-7	Benzyl Chloride	ND	4.8	1.5	ug/kg	
108-86-1	Bromobenzene	ND	4.8	1.4	ug/kg	
74-97-5	Bromochloromethane	ND	4.8	1.4	ug/kg	
75-27-4	Bromodichloromethane	ND	4.8	1.1	ug/kg	
75-25-2	Bromoform	ND	4.8	1.5	ug/kg	
104-51-8	n-Butylbenzene	ND	4.8	1.3	ug/kg	
135-98-8	sec-Butylbenzene	ND	4.8	1.5	ug/kg	
98-06-6	tert-Butylbenzene	ND	4.8	1.2	ug/kg	
108-90-7	Chlorobenzene	ND	4.8	0.97	ug/kg	
75-00-3	Chloroethane	ND	4.8	1.9	ug/kg	
67-66-3	Chloroform	ND	4.8	1.2	ug/kg	
544-10-5	1-Chlorohexane	ND	4.8	1.4	ug/kg	
95-49-8	o-Chlorotoluene	ND	4.8	1.2	ug/kg	
106-43-4	p-Chlorotoluene	ND	4.8	1.2	ug/kg	
110-75-8	2-Chloroethyl vinyl ether	ND	24	9.7	ug/kg	
75-15-0	Carbon disulfide	ND	4.8	1.9	ug/kg	
56-23-5	Carbon tetrachloride	ND	4.8	1.7	ug/kg	
75-34-3	1,1-Dichloroethane	ND	4.8	1.1	ug/kg	
75-35-4	1,1-Dichloroethylene	ND	4.8	1.4	ug/kg	
563-58-6	1,1-Dichloropropene	ND	4.8	1.3	ug/kg	
96-12-8	1,2-Dibromo-3-chloropropane	ND	4.8	2.2	ug/kg	
106-93-4	1,2-Dibromoethane	ND	4.8	0.97	ug/kg	
107-06-2	1,2-Dichloroethane	ND	4.8	0.97	ug/kg	
78-87-5	1,2-Dichloropropane	ND	4.8	1.2	ug/kg	
142-28-9	1,3-Dichloropropane	ND	4.8	0.97	ug/kg	
594-20-7	2,2-Dichloropropane	ND	4.8	1.4	ug/kg	

ND = Not detected MDL - Method Detection Limit
RL = Reporting Limit
E = Indicates value exceeds calibration range

J = Indicates an estimated value
B = Indicates analyte found in associated method blank
N = Indicates presumptive evidence of a compound

Report of Analysis

Client Sample ID:	SS39-DPT-08B		
Lab Sample ID:	F78009-11	**Date Sampled:**	11/11/10
Matrix:	SO - Soil	**Date Received:**	11/12/10
Method:	SW846 8260B	**Percent Solids:**	91.7
Project:	Holloman AFB; Alamogordo, NM		

VOA Special List

CAS No.	Compound	Result	RL	MDL	Units	Q
124-48-1	Dibromochloromethane	ND	4.8	0.97	ug/kg	
75-71-8	Dichlorodifluoromethane	ND	4.8	1.5	ug/kg	
156-59-2	cis-1,2-Dichloroethylene	ND	4.8	1.5	ug/kg	
10061-01-5	cis-1,3-Dichloropropene	ND	4.8	0.97	ug/kg	
1476-11-5	cis-1,4-Dichloro-2-Butene	ND	24	4.8	ug/kg	
541-73-1	m-Dichlorobenzene	ND	4.8	1.2	ug/kg	
95-50-1	o-Dichlorobenzene	ND	4.8	1.1	ug/kg	
106-46-7	p-Dichlorobenzene	ND	4.8	1.1	ug/kg	
156-60-5	trans-1,2-Dichloroethylene	ND	4.8	1.5	ug/kg	
10061-02-6	trans-1,3-Dichloropropene	ND	4.8	1.1	ug/kg	
100-41-4	Ethylbenzene	ND	4.8	0.97	ug/kg	
97-63-2	Ethyl methacrylate	ND	24	4.8	ug/kg	
76-13-1	Freon 113	ND	4.8	1.6	ug/kg	
591-78-6	2-Hexanone	ND	24	5.2	ug/kg	
87-68-3	Hexachlorobutadiene	ND	4.8	1.9	ug/kg	
110-54-3	Hexane	ND	4.8	1.8	ug/kg	
98-82-8	Isopropylbenzene	ND	4.8	1.1	ug/kg	
99-87-6	p-Isopropyltoluene	ND	4.8	1.2	ug/kg	
108-10-1	4-Methyl-2-pentanone	ND	24	5.3	ug/kg	
126-98-7	Methacrylonitrile	ND	24	8.9	ug/kg	
74-83-9	Methyl bromide	ND	4.8	1.9	ug/kg	
74-87-3	Methyl chloride	ND	4.8	1.9	ug/kg	
74-88-4	Methyl iodide	ND	9.7	1.1	ug/kg	
80-62-6	Methyl methacrylate	ND	4.8	1.7	ug/kg	
74-95-3	Methylene bromide	ND	4.8	1.5	ug/kg	
75-09-2	Methylene chloride	ND	9.7	4.5	ug/kg	
78-93-3	Methyl ethyl ketone	ND	24	5.9	ug/kg	
1634-04-4	Methyl Tert Butyl Ether	ND	4.8	1.9	ug/kg	
91-20-3	Naphthalene	ND	4.8	1.9	ug/kg	
76-01-7	Pentachloroethane	ND	24	4.8	ug/kg	
107-12-0	Propionitrile	ND	48	15	ug/kg	
103-65-1	n-Propylbenzene	ND	4.8	1.4	ug/kg	
100-42-5	Styrene	ND	4.8	2.5	ug/kg	
630-20-6	1,1,1,2-Tetrachloroethane	ND	4.8	0.97	ug/kg	
71-55-6	1,1,1-Trichloroethane	ND	4.8	1.1	ug/kg	
79-34-5	1,1,2,2-Tetrachloroethane	ND	4.8	1.2	ug/kg	
79-00-5	1,1,2-Trichloroethane	ND	4.8	1.1	ug/kg	
87-61-6	1,2,3-Trichlorobenzene	ND	4.8	0.97	ug/kg	
96-18-4	1,2,3-Trichloropropane	ND	4.8	1.6	ug/kg	
120-82-1	1,2,4-Trichlorobenzene	ND	4.8	1.2	ug/kg	

ND = Not detected MDL - Method Detection Limit
RL = Reporting Limit
E = Indicates value exceeds calibration range

J = Indicates an estimated value
B = Indicates analyte found in associated method blank
N = Indicates presumptive evidence of a compound

Report of Analysis

Client Sample ID:	SS39-DPT-08B		
Lab Sample ID:	F78009-11	**Date Sampled:**	11/11/10
Matrix:	SO - Soil	**Date Received:**	11/12/10
Method:	SW846 8260B	**Percent Solids:**	91.7
Project:	Holloman AFB; Alamogordo, NM		

VOA Special List

CAS No.	Compound	Result	RL	MDL	Units	Q
95-63-6	1,2,4-Trimethylbenzene	ND	4.8	1.1	ug/kg	
108-67-8	1,3,5-Trimethylbenzene	ND	4.8	1.3	ug/kg	
127-18-4	Tetrachloroethylene	ND	4.8	0.97	ug/kg	
108-88-3	Toluene	ND	4.8	1.2	ug/kg	
79-01-6	Trichloroethylene	ND	4.8	1.2	ug/kg	
75-69-4	Trichlorofluoromethane	ND	4.8	1.9	ug/kg	
110-57-6	Trans-1,4-Dichloro-2-Butene	ND	24	4.8	ug/kg	
75-01-4	Vinyl chloride	ND	4.8	1.5	ug/kg	
108-05-4	Vinyl Acetate	ND	24	13	ug/kg	
	m,p-Xylene	ND	9.7	2.1	ug/kg	
95-47-6	o-Xylene	ND	4.8	0.97	ug/kg	

CAS No.	Surrogate Recoveries	Run# 1	Run# 2	Limits
1868-53-7	Dibromofluoromethane	112%		80-121%
2037-26-5	Toluene-D8	79%		71-130%
460-00-4	4-Bromofluorobenzene	94%		59-148%
17060-07-0	1,2-Dichloroethane-D4	110%		77-123%

ND = Not detected MDL - Method Detection Limit
RL = Reporting Limit
E = Indicates value exceeds calibration range

J = Indicates an estimated value
B = Indicates analyte found in associated method blank
N = Indicates presumptive evidence of a compound

Report of Analysis

Client Sample ID:	SS39-DPT-08B		
Lab Sample ID:	F78009-11	**Date Sampled:**	11/11/10
Matrix:	SO - Soil	**Date Received:**	11/12/10
Method:	SW846 8015C	**Percent Solids:**	91.7
Project:	Holloman AFB; Alamogordo, NM		

	File ID	DF	Analyzed	By	Prep Date	Prep Batch	Analytical Batch
Run #1	QR056881.D	1	11/20/10	AH	n/a	n/a	GQR2474
Run #2							

	Initial Weight	Final Volume	Methanol Aliquot
Run #1	6.32 g	5.0 ml	100 ul
Run #2			

CAS No.	Compound	Result	RL	MDL	Units	Q
	TPH-GRO (C6-C10)	ND	4.8	2.4	mg/kg	

CAS No.	Surrogate Recoveries	Run# 1	Run# 2	Limits
460-00-4	4-Bromofluorobenzene	77%		56-136%
98-08-8	aaa-Trifluorotoluene	70%		61-121%

ND = Not detected MDL - Method Detection Limit
RL = Reporting Limit
E = Indicates value exceeds calibration range

J = Indicates an estimated value
B = Indicates analyte found in associated method blank
N = Indicates presumptive evidence of a compound

Report of Analysis

Client Sample ID:	SS39-DPT-08C		
Lab Sample ID:	F78009-12	**Date Sampled:**	11/11/10
Matrix:	SO - Soil	**Date Received:**	11/12/10
Method:	SW846 8260B	**Percent Solids:**	90.4
Project:	Holloman AFB; Alamogordo, NM		

	File ID	DF	Analyzed	By	Prep Date	Prep Batch	Analytical Batch
Run #1	H066160.D	1	11/18/10	MM	n/a	n/a	VH2463
Run #2							

	Initial Weight
Run #1	7.60 g
Run #2	

VOA Special List

CAS No.	Compound	Result	RL	MDL	Units	Q
67-64-1	Acetone	ND	36	15	ug/kg	
75-05-8	Acetonitrile	ND	36	13	ug/kg	
107-02-8	Acrolein	ND	18	8.0	ug/kg	
107-13-1	Acrylonitrile	ND	18	8.3	ug/kg	
107-05-1	Allyl chloride	ND	18	3.6	ug/kg	
71-43-2	Benzene	ND	3.6	1.1	ug/kg	
100-44-7	Benzyl Chloride	ND	3.6	1.1	ug/kg	
108-86-1	Bromobenzene	ND	3.6	1.0	ug/kg	
74-97-5	Bromochloromethane	ND	3.6	1.0	ug/kg	
75-27-4	Bromodichloromethane	ND	3.6	0.80	ug/kg	
75-25-2	Bromoform	ND	3.6	1.1	ug/kg	
104-51-8	n-Butylbenzene	ND	3.6	0.95	ug/kg	
135-98-8	sec-Butylbenzene	ND	3.6	1.2	ug/kg	
98-06-6	tert-Butylbenzene	ND	3.6	0.87	ug/kg	
108-90-7	Chlorobenzene	ND	3.6	0.73	ug/kg	
75-00-3	Chloroethane	ND	3.6	1.5	ug/kg	
67-66-3	Chloroform	ND	3.6	0.87	ug/kg	
544-10-5	1-Chlorohexane	ND	3.6	1.0	ug/kg	
95-49-8	o-Chlorotoluene	ND	3.6	0.87	ug/kg	
106-43-4	p-Chlorotoluene	ND	3.6	0.87	ug/kg	
110-75-8	2-Chloroethyl vinyl ether	ND	18	7.3	ug/kg	
75-15-0	Carbon disulfide	ND	3.6	1.5	ug/kg	
56-23-5	Carbon tetrachloride	ND	3.6	1.3	ug/kg	
75-34-3	1,1-Dichloroethane	ND	3.6	0.80	ug/kg	
75-35-4	1,1-Dichloroethylene	ND	3.6	1.0	ug/kg	
563-58-6	1,1-Dichloropropene	ND	3.6	0.95	ug/kg	
96-12-8	1,2-Dibromo-3-chloropropane	ND	3.6	1.7	ug/kg	
106-93-4	1,2-Dibromoethane	ND	3.6	0.73	ug/kg	
107-06-2	1,2-Dichloroethane	ND	3.6	0.73	ug/kg	
78-87-5	1,2-Dichloropropane	ND	3.6	0.87	ug/kg	
142-28-9	1,3-Dichloropropane	ND	3.6	0.73	ug/kg	
594-20-7	2,2-Dichloropropane	ND	3.6	1.0	ug/kg	

ND = Not detected MDL - Method Detection Limit
RL = Reporting Limit
E = Indicates value exceeds calibration range

J = Indicates an estimated value
B = Indicates analyte found in associated method blank
N = Indicates presumptive evidence of a compound

Report of Analysis

Client Sample ID:	SS39-DPT-08C		
Lab Sample ID:	F78009-12	**Date Sampled:**	11/11/10
Matrix:	SO - Soil	**Date Received:**	11/12/10
Method:	SW846 8260B	**Percent Solids:**	90.4
Project:	Holloman AFB; Alamogordo, NM		

VOA Special List

CAS No.	Compound	Result	RL	MDL	Units	Q
124-48-1	Dibromochloromethane	ND	3.6	0.73	ug/kg	
75-71-8	Dichlorodifluoromethane	ND	3.6	1.1	ug/kg	
156-59-2	cis-1,2-Dichloroethylene	ND	3.6	1.1	ug/kg	
10061-01-5	cis-1,3-Dichloropropene	ND	3.6	0.73	ug/kg	
1476-11-5	cis-1,4-Dichloro-2-Butene	ND	18	3.6	ug/kg	
541-73-1	m-Dichlorobenzene	ND	3.6	0.87	ug/kg	
95-50-1	o-Dichlorobenzene	ND	3.6	0.80	ug/kg	
106-46-7	p-Dichlorobenzene	ND	3.6	0.80	ug/kg	
156-60-5	trans-1,2-Dichloroethylene	ND	3.6	1.1	ug/kg	
10061-02-6	trans-1,3-Dichloropropene	ND	3.6	0.80	ug/kg	
100-41-4	Ethylbenzene	ND	3.6	0.73	ug/kg	
97-63-2	Ethyl methacrylate	ND	18	3.6	ug/kg	
76-13-1	Freon 113	ND	3.6	1.2	ug/kg	
591-78-6	2-Hexanone	ND	18	3.9	ug/kg	
87-68-3	Hexachlorobutadiene	ND	3.6	1.5	ug/kg	
110-54-3	Hexane	ND	3.6	1.4	ug/kg	
98-82-8	Isopropylbenzene	ND	3.6	0.80	ug/kg	
99-87-6	p-Isopropyltoluene	ND	3.6	0.87	ug/kg	
108-10-1	4-Methyl-2-pentanone	ND	18	4.0	ug/kg	
126-98-7	Methacrylonitrile	ND	18	6.7	ug/kg	
74-83-9	Methyl bromide	ND	3.6	1.5	ug/kg	
74-87-3	Methyl chloride	ND	3.6	1.5	ug/kg	
74-88-4	Methyl iodide	ND	7.3	0.80	ug/kg	
80-62-6	Methyl methacrylate	ND	3.6	1.3	ug/kg	
74-95-3	Methylene bromide	ND	3.6	1.1	ug/kg	
75-09-2	Methylene chloride [a]	4.6	7.3	3.3	ug/kg	J
78-93-3	Methyl ethyl ketone	ND	18	4.4	ug/kg	
1634-04-4	Methyl Tert Butyl Ether	ND	3.6	1.5	ug/kg	
91-20-3	Naphthalene	ND	3.6	1.5	ug/kg	
76-01-7	Pentachloroethane	ND	18	3.6	ug/kg	
107-12-0	Propionitrile	ND	36	12	ug/kg	
103-65-1	n-Propylbenzene	ND	3.6	1.0	ug/kg	
100-42-5	Styrene	ND	3.6	1.9	ug/kg	
630-20-6	1,1,1,2-Tetrachloroethane	ND	3.6	0.73	ug/kg	
71-55-6	1,1,1-Trichloroethane	ND	3.6	0.80	ug/kg	
79-34-5	1,1,2,2-Tetrachloroethane	ND	3.6	0.87	ug/kg	
79-00-5	1,1,2-Trichloroethane	ND	3.6	0.80	ug/kg	
87-61-6	1,2,3-Trichlorobenzene	ND	3.6	0.73	ug/kg	
96-18-4	1,2,3-Trichloropropane	ND	3.6	1.2	ug/kg	
120-82-1	1,2,4-Trichlorobenzene	ND	3.6	0.87	ug/kg	

ND = Not detected MDL - Method Detection Limit
RL = Reporting Limit
E = Indicates value exceeds calibration range

J = Indicates an estimated value
B = Indicates analyte found in associated method blank
N = Indicates presumptive evidence of a compound

Report of Analysis

Client Sample ID:	SS39-DPT-08C		
Lab Sample ID:	F78009-12	**Date Sampled:**	11/11/10
Matrix:	SO - Soil	**Date Received:**	11/12/10
Method:	SW846 8260B	**Percent Solids:**	90.4
Project:	Holloman AFB; Alamogordo, NM		

VOA Special List

CAS No.	Compound	Result	RL	MDL	Units	Q
95-63-6	1,2,4-Trimethylbenzene	ND	3.6	0.80	ug/kg	
108-67-8	1,3,5-Trimethylbenzene	ND	3.6	0.95	ug/kg	
127-18-4	Tetrachloroethylene	59.5	3.6	0.73	ug/kg	
108-88-3	Toluene	ND	3.6	0.87	ug/kg	
79-01-6	Trichloroethylene	ND	3.6	0.87	ug/kg	
75-69-4	Trichlorofluoromethane	ND	3.6	1.5	ug/kg	
110-57-6	Trans-1,4-Dichloro-2-Butene	ND	18	3.6	ug/kg	
75-01-4	Vinyl chloride	ND	3.6	1.1	ug/kg	
108-05-4	Vinyl Acetate	ND	18	10	ug/kg	
	m,p-Xylene	ND	7.3	1.6	ug/kg	
95-47-6	o-Xylene	ND	3.6	0.73	ug/kg	

CAS No.	Surrogate Recoveries	Run# 1	Run# 2	Limits
1868-53-7	Dibromofluoromethane	102%		80-121%
2037-26-5	Toluene-D8	79%		71-130%
460-00-4	4-Bromofluorobenzene	98%		59-148%
17060-07-0	1,2-Dichloroethane-D4	106%		77-123%

(a) ICV and BS outside of control limits. Suspected laboratory contaminant.

ND = Not detected MDL - Method Detection Limit
RL = Reporting Limit
E = Indicates value exceeds calibration range

J = Indicates an estimated value
B = Indicates analyte found in associated method blank
N = Indicates presumptive evidence of a compound

Accutest Laboratories

Report of Analysis

Client Sample ID:	SS39-DPT-08C		
Lab Sample ID:	F78009-12	**Date Sampled:**	11/11/10
Matrix:	SO - Soil	**Date Received:**	11/12/10
Method:	SW846 8015C	**Percent Solids:**	90.4
Project:	Holloman AFB; Alamogordo, NM		

	File ID	DF	Analyzed	By	Prep Date	Prep Batch	Analytical Batch
Run #1	QR056882.D	1	11/20/10	AH	n/a	n/a	GQR2474
Run #2							

	Initial Weight	Final Volume	Methanol Aliquot
Run #1	6.74 g	5.0 ml	100 ul
Run #2			

CAS No.	Compound	Result	RL	MDL	Units	Q
	TPH-GRO (C6-C10)	ND	4.6	2.3	mg/kg	

CAS No.	Surrogate Recoveries	Run# 1	Run# 2	Limits
460-00-4	4-Bromofluorobenzene	80%		56-136%
98-08-8	aaa-Trifluorotoluene	81%		61-121%

ND = Not detected MDL - Method Detection Limit
RL = Reporting Limit
E = Indicates value exceeds calibration range

J = Indicates an estimated value
B = Indicates analyte found in associated method blank
N = Indicates presumptive evidence of a compound

Report of Analysis

Client Sample ID:	SS39-DPT-09A		
Lab Sample ID:	F78009-13	**Date Sampled:**	11/11/10
Matrix:	SO - Soil	**Date Received:**	11/12/10
Method:	SW846 8260B	**Percent Solids:**	94.5
Project:	Holloman AFB; Alamogordo, NM		

	File ID	DF	Analyzed	By	Prep Date	Prep Batch	Analytical Batch
Run #1	H066177.D	1	11/19/10	MM	n/a	n/a	VH2464
Run #2							

	Initial Weight
Run #1	5.18 g
Run #2	

VOA Special List

CAS No.	Compound	Result	RL	MDL	Units	Q
67-64-1	Acetone	ND	51	20	ug/kg	
75-05-8	Acetonitrile	ND	51	18	ug/kg	
107-02-8	Acrolein	ND	26	11	ug/kg	
107-13-1	Acrylonitrile	ND	26	12	ug/kg	
107-05-1	Allyl chloride	ND	26	5.1	ug/kg	
71-43-2	Benzene	ND	5.1	1.5	ug/kg	
100-44-7	Benzyl Chloride	ND	5.1	1.5	ug/kg	
108-86-1	Bromobenzene	ND	5.1	1.4	ug/kg	
74-97-5	Bromochloromethane	ND	5.1	1.4	ug/kg	
75-27-4	Bromodichloromethane	ND	5.1	1.1	ug/kg	
75-25-2	Bromoform	ND	5.1	1.5	ug/kg	
104-51-8	n-Butylbenzene	ND	5.1	1.3	ug/kg	
135-98-8	sec-Butylbenzene	ND	5.1	1.6	ug/kg	
98-06-6	tert-Butylbenzene	ND	5.1	1.2	ug/kg	
108-90-7	Chlorobenzene	ND	5.1	1.0	ug/kg	
75-00-3	Chloroethane	ND	5.1	2.0	ug/kg	
67-66-3	Chloroform	ND	5.1	1.2	ug/kg	
544-10-5	1-Chlorohexane	ND	5.1	1.4	ug/kg	
95-49-8	o-Chlorotoluene	ND	5.1	1.2	ug/kg	
106-43-4	p-Chlorotoluene	ND	5.1	1.2	ug/kg	
110-75-8	2-Chloroethyl vinyl ether	ND	26	10	ug/kg	
75-15-0	Carbon disulfide	ND	5.1	2.0	ug/kg	
56-23-5	Carbon tetrachloride	ND	5.1	1.8	ug/kg	
75-34-3	1,1-Dichloroethane	ND	5.1	1.1	ug/kg	
75-35-4	1,1-Dichloroethylene	ND	5.1	1.4	ug/kg	
563-58-6	1,1-Dichloropropene	ND	5.1	1.3	ug/kg	
96-12-8	1,2-Dibromo-3-chloropropane	ND	5.1	2.3	ug/kg	
106-93-4	1,2-Dibromoethane	ND	5.1	1.0	ug/kg	
107-06-2	1,2-Dichloroethane	ND	5.1	1.0	ug/kg	
78-87-5	1,2-Dichloropropane	ND	5.1	1.2	ug/kg	
142-28-9	1,3-Dichloropropane	ND	5.1	1.0	ug/kg	
594-20-7	2,2-Dichloropropane	ND	5.1	1.4	ug/kg	

ND = Not detected MDL - Method Detection Limit
RL = Reporting Limit
E = Indicates value exceeds calibration range

J = Indicates an estimated value
B = Indicates analyte found in associated method blank
N = Indicates presumptive evidence of a compound

Report of Analysis

Client Sample ID:	SS39-DPT-09A		
Lab Sample ID:	F78009-13	**Date Sampled:**	11/11/10
Matrix:	SO - Soil	**Date Received:**	11/12/10
Method:	SW846 8260B	**Percent Solids:**	94.5
Project:	Holloman AFB; Alamogordo, NM		

VOA Special List

CAS No.	Compound	Result	RL	MDL	Units	Q
124-48-1	Dibromochloromethane	ND	5.1	1.0	ug/kg	
75-71-8	Dichlorodifluoromethane	ND	5.1	1.5	ug/kg	
156-59-2	cis-1,2-Dichloroethylene	ND	5.1	1.5	ug/kg	
10061-01-5	cis-1,3-Dichloropropene	ND	5.1	1.0	ug/kg	
1476-11-5	cis-1,4-Dichloro-2-Butene	ND	26	5.1	ug/kg	
541-73-1	m-Dichlorobenzene	ND	5.1	1.2	ug/kg	
95-50-1	o-Dichlorobenzene	ND	5.1	1.1	ug/kg	
106-46-7	p-Dichlorobenzene	ND	5.1	1.1	ug/kg	
156-60-5	trans-1,2-Dichloroethylene	ND	5.1	1.5	ug/kg	
10061-02-6	trans-1,3-Dichloropropene	ND	5.1	1.1	ug/kg	
100-41-4	Ethylbenzene	ND	5.1	1.0	ug/kg	
97-63-2	Ethyl methacrylate	ND	26	5.1	ug/kg	
76-13-1	Freon 113	ND	5.1	1.7	ug/kg	
591-78-6	2-Hexanone	ND	26	5.5	ug/kg	
87-68-3	Hexachlorobutadiene	ND	5.1	2.0	ug/kg	
110-54-3	Hexane	ND	5.1	1.9	ug/kg	
98-82-8	Isopropylbenzene	ND	5.1	1.1	ug/kg	
99-87-6	p-Isopropyltoluene	ND	5.1	1.2	ug/kg	
108-10-1	4-Methyl-2-pentanone	ND	26	5.6	ug/kg	
126-98-7	Methacrylonitrile	ND	26	9.4	ug/kg	
74-83-9	Methyl bromide	ND	5.1	2.0	ug/kg	
74-87-3	Methyl chloride	ND	5.1	2.0	ug/kg	
74-88-4	Methyl iodide	ND	10	1.1	ug/kg	
80-62-6	Methyl methacrylate	ND	5.1	1.8	ug/kg	
74-95-3	Methylene bromide	ND	5.1	1.5	ug/kg	
75-09-2	Methylene chloride [a]	11.9	10	4.7	ug/kg	
78-93-3	Methyl ethyl ketone	ND	26	6.2	ug/kg	
1634-04-4	Methyl Tert Butyl Ether	ND	5.1	2.0	ug/kg	
91-20-3	Naphthalene	ND	5.1	2.0	ug/kg	
76-01-7	Pentachloroethane	ND	26	5.1	ug/kg	
107-12-0	Propionitrile	ND	51	16	ug/kg	
103-65-1	n-Propylbenzene	ND	5.1	1.4	ug/kg	
100-42-5	Styrene	ND	5.1	2.7	ug/kg	
630-20-6	1,1,1,2-Tetrachloroethane	ND	5.1	1.0	ug/kg	
71-55-6	1,1,1-Trichloroethane	ND	5.1	1.1	ug/kg	
79-34-5	1,1,2,2-Tetrachloroethane	ND	5.1	1.2	ug/kg	
79-00-5	1,1,2-Trichloroethane	ND	5.1	1.1	ug/kg	
87-61-6	1,2,3-Trichlorobenzene	ND	5.1	1.0	ug/kg	
96-18-4	1,2,3-Trichloropropane	ND	5.1	1.7	ug/kg	
120-82-1	1,2,4-Trichlorobenzene	ND	5.1	1.2	ug/kg	

ND = Not detected MDL - Method Detection Limit
RL = Reporting Limit
E = Indicates value exceeds calibration range

J = Indicates an estimated value
B = Indicates analyte found in associated method blank
N = Indicates presumptive evidence of a compound

Report of Analysis

Client Sample ID:	SS39-DPT-09A		
Lab Sample ID:	F78009-13	**Date Sampled:**	11/11/10
Matrix:	SO - Soil	**Date Received:**	11/12/10
Method:	SW846 8260B	**Percent Solids:**	94.5
Project:	Holloman AFB; Alamogordo, NM		

VOA Special List

CAS No.	Compound	Result	RL	MDL	Units	Q
95-63-6	1,2,4-Trimethylbenzene	ND	5.1	1.1	ug/kg	
108-67-8	1,3,5-Trimethylbenzene	ND	5.1	1.3	ug/kg	
127-18-4	Tetrachloroethylene	ND	5.1	1.0	ug/kg	
108-88-3	Toluene	ND	5.1	1.2	ug/kg	
79-01-6	Trichloroethylene	ND	5.1	1.2	ug/kg	
75-69-4	Trichlorofluoromethane	ND	5.1	2.0	ug/kg	
110-57-6	Trans-1,4-Dichloro-2-Butene	ND	26	5.1	ug/kg	
75-01-4	Vinyl chloride	ND	5.1	1.5	ug/kg	
108-05-4	Vinyl Acetate	ND	26	14	ug/kg	
	m,p-Xylene	ND	10	2.2	ug/kg	
95-47-6	o-Xylene	ND	5.1	1.0	ug/kg	

CAS No.	Surrogate Recoveries	Run# 1	Run# 2	Limits
1868-53-7	Dibromofluoromethane	106%		80-121%
2037-26-5	Toluene-D8	81%		71-130%
460-00-4	4-Bromofluorobenzene	103%		59-148%
17060-07-0	1,2-Dichloroethane-D4	104%		77-123%

(a) ICV and BS outside of control limits. Suspected laboratory contaminant.

ND = Not detected MDL - Method Detection Limit
RL = Reporting Limit
E = Indicates value exceeds calibration range

J = Indicates an estimated value
B = Indicates analyte found in associated method blank
N = Indicates presumptive evidence of a compound

Report of Analysis

Client Sample ID:	SS39-DPT-09A		
Lab Sample ID:	F78009-13	**Date Sampled:**	11/11/10
Matrix:	SO - Soil	**Date Received:**	11/12/10
Method:	SW846 8015C	**Percent Solids:**	94.5
Project:	Holloman AFB; Alamogordo, NM		

	File ID	DF	Analyzed	By	Prep Date	Prep Batch	Analytical Batch
Run #1	QR056883.D	1	11/20/10	AH	n/a	n/a	GQR2474
Run #2							

	Initial Weight	Final Volume	Methanol Aliquot
Run #1	4.94 g	5.0 ml	100 ul
Run #2			

CAS No.	Compound	Result	RL	MDL	Units	Q
	TPH-GRO (C6-C10)	ND	5.6	2.8	mg/kg	

CAS No.	Surrogate Recoveries	Run# 1	Run# 2	Limits
460-00-4	4-Bromofluorobenzene	78%		56-136%
98-08-8	aaa-Trifluorotoluene	71%		61-121%

ND = Not detected MDL - Method Detection Limit
RL = Reporting Limit
E = Indicates value exceeds calibration range

J = Indicates an estimated value
B = Indicates analyte found in associated method blank
N = Indicates presumptive evidence of a compound

Report of Analysis

Client Sample ID:	SS39-DPT-09B		
Lab Sample ID:	F78009-14	**Date Sampled:**	11/11/10
Matrix:	SO - Soil	**Date Received:**	11/12/10
Method:	SW846 8260B	**Percent Solids:**	89.2
Project:	Holloman AFB; Alamogordo, NM		

	File ID	DF	Analyzed	By	Prep Date	Prep Batch	Analytical Batch
Run #1	H066178.D	1	11/19/10	MM	n/a	n/a	VH2464
Run #2							

	Initial Weight
Run #1	7.73 g
Run #2	

VOA Special List

CAS No.	Compound	Result	RL	MDL	Units	Q
67-64-1	Acetone	ND	36	15	ug/kg	
75-05-8	Acetonitrile	ND	36	13	ug/kg	
107-02-8	Acrolein	ND	18	8.0	ug/kg	
107-13-1	Acrylonitrile	ND	18	8.3	ug/kg	
107-05-1	Allyl chloride	ND	18	3.6	ug/kg	
71-43-2	Benzene	ND	3.6	1.1	ug/kg	
100-44-7	Benzyl Chloride	ND	3.6	1.1	ug/kg	
108-86-1	Bromobenzene	ND	3.6	1.0	ug/kg	
74-97-5	Bromochloromethane	ND	3.6	1.0	ug/kg	
75-27-4	Bromodichloromethane	ND	3.6	0.80	ug/kg	
75-25-2	Bromoform	ND	3.6	1.1	ug/kg	
104-51-8	n-Butylbenzene	ND	3.6	0.94	ug/kg	
135-98-8	sec-Butylbenzene	ND	3.6	1.2	ug/kg	
98-06-6	tert-Butylbenzene	ND	3.6	0.87	ug/kg	
108-90-7	Chlorobenzene	ND	3.6	0.73	ug/kg	
75-00-3	Chloroethane	ND	3.6	1.5	ug/kg	
67-66-3	Chloroform	ND	3.6	0.87	ug/kg	
544-10-5	1-Chlorohexane	ND	3.6	1.0	ug/kg	
95-49-8	o-Chlorotoluene	ND	3.6	0.87	ug/kg	
106-43-4	p-Chlorotoluene	ND	3.6	0.87	ug/kg	
110-75-8	2-Chloroethyl vinyl ether	ND	18	7.3	ug/kg	
75-15-0	Carbon disulfide	ND	3.6	1.5	ug/kg	
56-23-5	Carbon tetrachloride	ND	3.6	1.3	ug/kg	
75-34-3	1,1-Dichloroethane	ND	3.6	0.80	ug/kg	
75-35-4	1,1-Dichloroethylene	ND	3.6	1.0	ug/kg	
563-58-6	1,1-Dichloropropene	ND	3.6	0.94	ug/kg	
96-12-8	1,2-Dibromo-3-chloropropane	ND	3.6	1.7	ug/kg	
106-93-4	1,2-Dibromoethane	ND	3.6	0.73	ug/kg	
107-06-2	1,2-Dichloroethane	ND	3.6	0.73	ug/kg	
78-87-5	1,2-Dichloropropane	ND	3.6	0.87	ug/kg	
142-28-9	1,3-Dichloropropane	ND	3.6	0.73	ug/kg	
594-20-7	2,2-Dichloropropane	ND	3.6	1.0	ug/kg	

ND = Not detected MDL - Method Detection Limit
RL = Reporting Limit
E = Indicates value exceeds calibration range

J = Indicates an estimated value
B = Indicates analyte found in associated method blank
N = Indicates presumptive evidence of a compound

Report of Analysis

Client Sample ID:	SS39-DPT-09B		
Lab Sample ID:	F78009-14	**Date Sampled:**	11/11/10
Matrix:	SO - Soil	**Date Received:**	11/12/10
Method:	SW846 8260B	**Percent Solids:**	89.2
Project:	Holloman AFB; Alamogordo, NM		

VOA Special List

CAS No.	Compound	Result	RL	MDL	Units	Q
124-48-1	Dibromochloromethane	ND	3.6	0.73	ug/kg	
75-71-8	Dichlorodifluoromethane	ND	3.6	1.1	ug/kg	
156-59-2	cis-1,2-Dichloroethylene	ND	3.6	1.1	ug/kg	
10061-01-5	cis-1,3-Dichloropropene	ND	3.6	0.73	ug/kg	
1476-11-5	cis-1,4-Dichloro-2-Butene	ND	18	3.6	ug/kg	
541-73-1	m-Dichlorobenzene	ND	3.6	0.87	ug/kg	
95-50-1	o-Dichlorobenzene	ND	3.6	0.80	ug/kg	
106-46-7	p-Dichlorobenzene	ND	3.6	0.80	ug/kg	
156-60-5	trans-1,2-Dichloroethylene	ND	3.6	1.1	ug/kg	
10061-02-6	trans-1,3-Dichloropropene	ND	3.6	0.80	ug/kg	
100-41-4	Ethylbenzene	ND	3.6	0.73	ug/kg	
97-63-2	Ethyl methacrylate	ND	18	3.6	ug/kg	
76-13-1	Freon 113	ND	3.6	1.2	ug/kg	
591-78-6	2-Hexanone	ND	18	3.9	ug/kg	
87-68-3	Hexachlorobutadiene	ND	3.6	1.5	ug/kg	
110-54-3	Hexane	ND	3.6	1.4	ug/kg	
98-82-8	Isopropylbenzene	ND	3.6	0.80	ug/kg	
99-87-6	p-Isopropyltoluene	ND	3.6	0.87	ug/kg	
108-10-1	4-Methyl-2-pentanone	ND	18	4.0	ug/kg	
126-98-7	Methacrylonitrile	ND	18	6.7	ug/kg	
74-83-9	Methyl bromide	ND	3.6	1.5	ug/kg	
74-87-3	Methyl chloride	ND	3.6	1.5	ug/kg	
74-88-4	Methyl iodide	ND	7.3	0.80	ug/kg	
80-62-6	Methyl methacrylate	ND	3.6	1.3	ug/kg	
74-95-3	Methylene bromide	ND	3.6	1.1	ug/kg	
75-09-2	Methylene chloride [a]	7.0	7.3	3.3	ug/kg	J
78-93-3	Methyl ethyl ketone	ND	18	4.4	ug/kg	
1634-04-4	Methyl Tert Butyl Ether	ND	3.6	1.5	ug/kg	
91-20-3	Naphthalene	ND	3.6	1.5	ug/kg	
76-01-7	Pentachloroethane	ND	18	3.6	ug/kg	
107-12-0	Propionitrile	ND	36	12	ug/kg	
103-65-1	n-Propylbenzene	ND	3.6	1.0	ug/kg	
100-42-5	Styrene	ND	3.6	1.9	ug/kg	
630-20-6	1,1,1,2-Tetrachloroethane	ND	3.6	0.73	ug/kg	
71-55-6	1,1,1-Trichloroethane	ND	3.6	0.80	ug/kg	
79-34-5	1,1,2,2-Tetrachloroethane	ND	3.6	0.87	ug/kg	
79-00-5	1,1,2-Trichloroethane	ND	3.6	0.80	ug/kg	
87-61-6	1,2,3-Trichlorobenzene	ND	3.6	0.73	ug/kg	
96-18-4	1,2,3-Trichloropropane	ND	3.6	1.2	ug/kg	
120-82-1	1,2,4-Trichlorobenzene	ND	3.6	0.87	ug/kg	

ND = Not detected MDL - Method Detection Limit
RL = Reporting Limit
E = Indicates value exceeds calibration range

J = Indicates an estimated value
B = Indicates analyte found in associated method blank
N = Indicates presumptive evidence of a compound

Report of Analysis

Client Sample ID:	SS39-DPT-09B		
Lab Sample ID:	F78009-14	**Date Sampled:**	11/11/10
Matrix:	SO - Soil	**Date Received:**	11/12/10
Method:	SW846 8260B	**Percent Solids:**	89.2
Project:	Holloman AFB; Alamogordo, NM		

VOA Special List

CAS No.	Compound	Result	RL	MDL	Units	Q
95-63-6	1,2,4-Trimethylbenzene	ND	3.6	0.80	ug/kg	
108-67-8	1,3,5-Trimethylbenzene	ND	3.6	0.94	ug/kg	
127-18-4	Tetrachloroethylene	4.8	3.6	0.73	ug/kg	
108-88-3	Toluene	ND	3.6	0.87	ug/kg	
79-01-6	Trichloroethylene	ND	3.6	0.87	ug/kg	
75-69-4	Trichlorofluoromethane	ND	3.6	1.5	ug/kg	
110-57-6	Trans-1,4-Dichloro-2-Butene	ND	18	3.6	ug/kg	
75-01-4	Vinyl chloride	ND	3.6	1.1	ug/kg	
108-05-4	Vinyl Acetate	ND	18	10	ug/kg	
	m,p-Xylene	ND	7.3	1.6	ug/kg	
95-47-6	o-Xylene	ND	3.6	0.73	ug/kg	

CAS No.	Surrogate Recoveries	Run# 1	Run# 2	Limits
1868-53-7	Dibromofluoromethane	113%		80-121%
2037-26-5	Toluene-D8	78%		71-130%
460-00-4	4-Bromofluorobenzene	102%		59-148%
17060-07-0	1,2-Dichloroethane-D4	116%		77-123%

(a) ICV and BS outside of control limits. Suspected laboratory contaminant.

ND = Not detected MDL - Method Detection Limit
RL = Reporting Limit
E = Indicates value exceeds calibration range

J = Indicates an estimated value
B = Indicates analyte found in associated method blank
N = Indicates presumptive evidence of a compound

Accutest Laboratories

Report of Analysis

Client Sample ID:	SS39-DPT-09B		
Lab Sample ID:	F78009-14	**Date Sampled:**	11/11/10
Matrix:	SO - Soil	**Date Received:**	11/12/10
Method:	SW846 8015C	**Percent Solids:**	89.2
Project:	Holloman AFB; Alamogordo, NM		

	File ID	DF	Analyzed	By	Prep Date	Prep Batch	Analytical Batch
Run #1	QR056884.D	1	11/20/10	AH	n/a	n/a	GQR2474
Run #2							

	Initial Weight	Final Volume	Methanol Aliquot
Run #1	6.61 g	5.0 ml	100 ul
Run #2			

CAS No.	Compound	Result	RL	MDL	Units	Q
	TPH-GRO (C6-C10)	ND	4.8	2.4	mg/kg	

CAS No.	Surrogate Recoveries	Run# 1	Run# 2	Limits
460-00-4	4-Bromofluorobenzene	83%		56-136%
98-08-8	aaa-Trifluorotoluene	73%		61-121%

ND = Not detected MDL - Method Detection Limit
RL = Reporting Limit
E = Indicates value exceeds calibration range

J = Indicates an estimated value
B = Indicates analyte found in associated method blank
N = Indicates presumptive evidence of a compound

Report of Analysis

Client Sample ID:	SS39-DPT-09C		
Lab Sample ID:	F78009-15	**Date Sampled:**	11/11/10
Matrix:	SO - Soil	**Date Received:**	11/12/10
Method:	SW846 8260B	**Percent Solids:**	93.2
Project:	Holloman AFB; Alamogordo, NM		

	File ID	DF	Analyzed	By	Prep Date	Prep Batch	Analytical Batch
Run #1	H066179.D	1	11/19/10	MM	n/a	n/a	VH2464
Run #2							

	Initial Weight
Run #1	6.49 g
Run #2	

VOA Special List

CAS No.	Compound	Result	RL	MDL	Units	Q
67-64-1	Acetone	ND	41	17	ug/kg	
75-05-8	Acetonitrile	ND	41	15	ug/kg	
107-02-8	Acrolein	ND	21	9.1	ug/kg	
107-13-1	Acrylonitrile	ND	21	9.4	ug/kg	
107-05-1	Allyl chloride	ND	21	4.1	ug/kg	
71-43-2	Benzene	ND	4.1	1.2	ug/kg	
100-44-7	Benzyl Chloride	ND	4.1	1.2	ug/kg	
108-86-1	Bromobenzene	ND	4.1	1.2	ug/kg	
74-97-5	Bromochloromethane	ND	4.1	1.2	ug/kg	
75-27-4	Bromodichloromethane	ND	4.1	0.91	ug/kg	
75-25-2	Bromoform	ND	4.1	1.2	ug/kg	
104-51-8	n-Butylbenzene	ND	4.1	1.1	ug/kg	
135-98-8	sec-Butylbenzene	ND	4.1	1.3	ug/kg	
98-06-6	tert-Butylbenzene	ND	4.1	0.99	ug/kg	
108-90-7	Chlorobenzene	ND	4.1	0.83	ug/kg	
75-00-3	Chloroethane	ND	4.1	1.7	ug/kg	
67-66-3	Chloroform	ND	4.1	0.99	ug/kg	
544-10-5	1-Chlorohexane	ND	4.1	1.2	ug/kg	
95-49-8	o-Chlorotoluene	ND	4.1	0.99	ug/kg	
106-43-4	p-Chlorotoluene	ND	4.1	0.99	ug/kg	
110-75-8	2-Chloroethyl vinyl ether	ND	21	8.3	ug/kg	
75-15-0	Carbon disulfide	ND	4.1	1.7	ug/kg	
56-23-5	Carbon tetrachloride	ND	4.1	1.5	ug/kg	
75-34-3	1,1-Dichloroethane	ND	4.1	0.91	ug/kg	
75-35-4	1,1-Dichloroethylene	ND	4.1	1.2	ug/kg	
563-58-6	1,1-Dichloropropene	ND	4.1	1.1	ug/kg	
96-12-8	1,2-Dibromo-3-chloropropane	ND	4.1	1.9	ug/kg	
106-93-4	1,2-Dibromoethane	ND	4.1	0.83	ug/kg	
107-06-2	1,2-Dichloroethane	ND	4.1	0.83	ug/kg	
78-87-5	1,2-Dichloropropane	ND	4.1	0.99	ug/kg	
142-28-9	1,3-Dichloropropane	ND	4.1	0.83	ug/kg	
594-20-7	2,2-Dichloropropane	ND	4.1	1.2	ug/kg	

ND = Not detected MDL - Method Detection Limit
RL = Reporting Limit
E = Indicates value exceeds calibration range

J = Indicates an estimated value
B = Indicates analyte found in associated method blank
N = Indicates presumptive evidence of a compound

Report of Analysis

Client Sample ID:	SS39-DPT-09C		
Lab Sample ID:	F78009-15	**Date Sampled:**	11/11/10
Matrix:	SO - Soil	**Date Received:**	11/12/10
Method:	SW846 8260B	**Percent Solids:**	93.2
Project:	Holloman AFB; Alamogordo, NM		

VOA Special List

CAS No.	Compound	Result	RL	MDL	Units	Q
124-48-1	Dibromochloromethane	ND	4.1	0.83	ug/kg	
75-71-8	Dichlorodifluoromethane	ND	4.1	1.2	ug/kg	
156-59-2	cis-1,2-Dichloroethylene	ND	4.1	1.2	ug/kg	
10061-01-5	cis-1,3-Dichloropropene	ND	4.1	0.83	ug/kg	
1476-11-5	cis-1,4-Dichloro-2-Butene	ND	21	4.1	ug/kg	
541-73-1	m-Dichlorobenzene	ND	4.1	0.99	ug/kg	
95-50-1	o-Dichlorobenzene	ND	4.1	0.91	ug/kg	
106-46-7	p-Dichlorobenzene	ND	4.1	0.91	ug/kg	
156-60-5	trans-1,2-Dichloroethylene	ND	4.1	1.2	ug/kg	
10061-02-6	trans-1,3-Dichloropropene	ND	4.1	0.91	ug/kg	
100-41-4	Ethylbenzene	ND	4.1	0.83	ug/kg	
97-63-2	Ethyl methacrylate	ND	21	4.1	ug/kg	
76-13-1	Freon 113	ND	4.1	1.4	ug/kg	
591-78-6	2-Hexanone	ND	21	4.5	ug/kg	
87-68-3	Hexachlorobutadiene	ND	4.1	1.7	ug/kg	
110-54-3	Hexane	ND	4.1	1.6	ug/kg	
98-82-8	Isopropylbenzene	ND	4.1	0.91	ug/kg	
99-87-6	p-Isopropyltoluene	ND	4.1	0.99	ug/kg	
108-10-1	4-Methyl-2-pentanone	ND	21	4.5	ug/kg	
126-98-7	Methacrylonitrile	ND	21	7.6	ug/kg	
74-83-9	Methyl bromide	ND	4.1	1.7	ug/kg	
74-87-3	Methyl chloride	ND	4.1	1.7	ug/kg	
74-88-4	Methyl iodide	ND	8.3	0.91	ug/kg	
80-62-6	Methyl methacrylate	ND	4.1	1.5	ug/kg	
74-95-3	Methylene bromide	ND	4.1	1.2	ug/kg	
75-09-2	Methylene chloride [a]	7.3	8.3	3.8	ug/kg	J
78-93-3	Methyl ethyl ketone	ND	21	5.0	ug/kg	
1634-04-4	Methyl Tert Butyl Ether	ND	4.1	1.7	ug/kg	
91-20-3	Naphthalene	ND	4.1	1.7	ug/kg	
76-01-7	Pentachloroethane	ND	21	4.1	ug/kg	
107-12-0	Propionitrile	ND	41	13	ug/kg	
103-65-1	n-Propylbenzene	ND	4.1	1.2	ug/kg	
100-42-5	Styrene	ND	4.1	2.1	ug/kg	
630-20-6	1,1,1,2-Tetrachloroethane	ND	4.1	0.83	ug/kg	
71-55-6	1,1,1-Trichloroethane	ND	4.1	0.91	ug/kg	
79-34-5	1,1,2,2-Tetrachloroethane	ND	4.1	0.99	ug/kg	
79-00-5	1,1,2-Trichloroethane	ND	4.1	0.91	ug/kg	
87-61-6	1,2,3-Trichlorobenzene	ND	4.1	0.83	ug/kg	
96-18-4	1,2,3-Trichloropropane	ND	4.1	1.4	ug/kg	
120-82-1	1,2,4-Trichlorobenzene	ND	4.1	0.99	ug/kg	

ND = Not detected MDL - Method Detection Limit
RL = Reporting Limit
E = Indicates value exceeds calibration range

J = Indicates an estimated value
B = Indicates analyte found in associated method blank
N = Indicates presumptive evidence of a compound

Report of Analysis

Client Sample ID:	SS39-DPT-09C		
Lab Sample ID:	F78009-15	**Date Sampled:**	11/11/10
Matrix:	SO - Soil	**Date Received:**	11/12/10
Method:	SW846 8260B	**Percent Solids:**	93.2
Project:	Holloman AFB; Alamogordo, NM		

VOA Special List

CAS No.	Compound	Result	RL	MDL	Units	Q
95-63-6	1,2,4-Trimethylbenzene	ND	4.1	0.91	ug/kg	
108-67-8	1,3,5-Trimethylbenzene	ND	4.1	1.1	ug/kg	
127-18-4	Tetrachloroethylene	ND	4.1	0.83	ug/kg	
108-88-3	Toluene	ND	4.1	0.99	ug/kg	
79-01-6	Trichloroethylene	ND	4.1	0.99	ug/kg	
75-69-4	Trichlorofluoromethane	ND	4.1	1.7	ug/kg	
110-57-6	Trans-1,4-Dichloro-2-Butene	ND	21	4.1	ug/kg	
75-01-4	Vinyl chloride	ND	4.1	1.2	ug/kg	
108-05-4	Vinyl Acetate	ND	21	11	ug/kg	
	m,p-Xylene	ND	8.3	1.8	ug/kg	
95-47-6	o-Xylene	ND	4.1	0.83	ug/kg	

CAS No.	Surrogate Recoveries	Run# 1	Run# 2	Limits
1868-53-7	Dibromofluoromethane	115%		80-121%
2037-26-5	Toluene-D8	76%		71-130%
460-00-4	4-Bromofluorobenzene	98%		59-148%
17060-07-0	1,2-Dichloroethane-D4	112%		77-123%

(a) ICV and BS outside of control limits. Suspected laboratory contaminant.

ND = Not detected MDL - Method Detection Limit
RL = Reporting Limit
E = Indicates value exceeds calibration range

J = Indicates an estimated value
B = Indicates analyte found in associated method blank
N = Indicates presumptive evidence of a compound

Accutest Laboratories

Report of Analysis

Client Sample ID:	SS39-DPT-09C		
Lab Sample ID:	F78009-15	**Date Sampled:**	11/11/10
Matrix:	SO - Soil	**Date Received:**	11/12/10
Method:	SW846 8015C	**Percent Solids:**	93.2
Project:	Holloman AFB; Alamogordo, NM		

	File ID	DF	Analyzed	By	Prep Date	Prep Batch	Analytical Batch
Run #1	QR056885.D	1	11/20/10	AH	n/a	n/a	GQR2474
Run #2							

	Initial Weight	Final Volume	Methanol Aliquot
Run #1	6.03 g	5.0 ml	100 ul
Run #2			

CAS No.	Compound	Result	RL	MDL	Units	Q
	TPH-GRO (C6-C10)	ND	4.8	2.4	mg/kg	

CAS No.	Surrogate Recoveries	Run# 1	Run# 2	Limits
460-00-4	4-Bromofluorobenzene	79%		56-136%
98-08-8	aaa-Trifluorotoluene	71%		61-121%

ND = Not detected MDL - Method Detection Limit
RL = Reporting Limit
E = Indicates value exceeds calibration range

J = Indicates an estimated value
B = Indicates analyte found in associated method blank
N = Indicates presumptive evidence of a compound

Report of Analysis

Client Sample ID:	SS39-DPT-10A		
Lab Sample ID:	F78009-16	**Date Sampled:**	11/11/10
Matrix:	SO - Soil	**Date Received:**	11/12/10
Method:	SW846 8260B	**Percent Solids:**	95.8
Project:	Holloman AFB; Alamogordo, NM		

	File ID	DF	Analyzed	By	Prep Date	Prep Batch	Analytical Batch
Run #1	H066180.D	1	11/19/10	MM	n/a	n/a	VH2464
Run #2							

	Initial Weight
Run #1	5.40 g
Run #2	

VOA Special List

CAS No.	Compound	Result	RL	MDL	Units	Q
67-64-1	Acetone	ND	48	19	ug/kg	
75-05-8	Acetonitrile	ND	48	17	ug/kg	
107-02-8	Acrolein	ND	24	11	ug/kg	
107-13-1	Acrylonitrile	ND	24	11	ug/kg	
107-05-1	Allyl chloride	ND	24	4.8	ug/kg	
71-43-2	Benzene	ND	4.8	1.4	ug/kg	
100-44-7	Benzyl Chloride	ND	4.8	1.4	ug/kg	
108-86-1	Bromobenzene	ND	4.8	1.4	ug/kg	
74-97-5	Bromochloromethane	ND	4.8	1.4	ug/kg	
75-27-4	Bromodichloromethane	ND	4.8	1.1	ug/kg	
75-25-2	Bromoform	ND	4.8	1.4	ug/kg	
104-51-8	n-Butylbenzene	ND	4.8	1.3	ug/kg	
135-98-8	sec-Butylbenzene	ND	4.8	1.5	ug/kg	
98-06-6	tert-Butylbenzene	ND	4.8	1.2	ug/kg	
108-90-7	Chlorobenzene	ND	4.8	0.97	ug/kg	
75-00-3	Chloroethane	ND	4.8	1.9	ug/kg	
67-66-3	Chloroform	ND	4.8	1.2	ug/kg	
544-10-5	1-Chlorohexane	ND	4.8	1.4	ug/kg	
95-49-8	o-Chlorotoluene	ND	4.8	1.2	ug/kg	
106-43-4	p-Chlorotoluene	ND	4.8	1.2	ug/kg	
110-75-8	2-Chloroethyl vinyl ether	ND	24	9.7	ug/kg	
75-15-0	Carbon disulfide	ND	4.8	1.9	ug/kg	
56-23-5	Carbon tetrachloride	ND	4.8	1.7	ug/kg	
75-34-3	1,1-Dichloroethane	ND	4.8	1.1	ug/kg	
75-35-4	1,1-Dichloroethylene	ND	4.8	1.4	ug/kg	
563-58-6	1,1-Dichloropropene	ND	4.8	1.3	ug/kg	
96-12-8	1,2-Dibromo-3-chloropropane	ND	4.8	2.2	ug/kg	
106-93-4	1,2-Dibromoethane	ND	4.8	0.97	ug/kg	
107-06-2	1,2-Dichloroethane	ND	4.8	0.97	ug/kg	
78-87-5	1,2-Dichloropropane	ND	4.8	1.2	ug/kg	
142-28-9	1,3-Dichloropropane	ND	4.8	0.97	ug/kg	
594-20-7	2,2-Dichloropropane	ND	4.8	1.4	ug/kg	

ND = Not detected MDL - Method Detection Limit
RL = Reporting Limit
E = Indicates value exceeds calibration range

J = Indicates an estimated value
B = Indicates analyte found in associated method blank
N = Indicates presumptive evidence of a compound

Report of Analysis

Client Sample ID:	SS39-DPT-10A		
Lab Sample ID:	F78009-16	**Date Sampled:**	11/11/10
Matrix:	SO - Soil	**Date Received:**	11/12/10
Method:	SW846 8260B	**Percent Solids:**	95.8
Project:	Holloman AFB; Alamogordo, NM		

VOA Special List

CAS No.	Compound	Result	RL	MDL	Units	Q
124-48-1	Dibromochloromethane	ND	4.8	0.97	ug/kg	
75-71-8	Dichlorodifluoromethane	ND	4.8	1.4	ug/kg	
156-59-2	cis-1,2-Dichloroethylene	ND	4.8	1.4	ug/kg	
10061-01-5	cis-1,3-Dichloropropene	ND	4.8	0.97	ug/kg	
1476-11-5	cis-1,4-Dichloro-2-Butene	ND	24	4.8	ug/kg	
541-73-1	m-Dichlorobenzene	ND	4.8	1.2	ug/kg	
95-50-1	o-Dichlorobenzene	ND	4.8	1.1	ug/kg	
106-46-7	p-Dichlorobenzene	ND	4.8	1.1	ug/kg	
156-60-5	trans-1,2-Dichloroethylene	ND	4.8	1.4	ug/kg	
10061-02-6	trans-1,3-Dichloropropene	ND	4.8	1.1	ug/kg	
100-41-4	Ethylbenzene	ND	4.8	0.97	ug/kg	
97-63-2	Ethyl methacrylate	ND	24	4.8	ug/kg	
76-13-1	Freon 113	ND	4.8	1.6	ug/kg	
591-78-6	2-Hexanone	ND	24	5.2	ug/kg	
87-68-3	Hexachlorobutadiene	ND	4.8	1.9	ug/kg	
110-54-3	Hexane	ND	4.8	1.8	ug/kg	
98-82-8	Isopropylbenzene	ND	4.8	1.1	ug/kg	
99-87-6	p-Isopropyltoluene	ND	4.8	1.2	ug/kg	
108-10-1	4-Methyl-2-pentanone	ND	24	5.3	ug/kg	
126-98-7	Methacrylonitrile	ND	24	8.9	ug/kg	
74-83-9	Methyl bromide	ND	4.8	1.9	ug/kg	
74-87-3	Methyl chloride	ND	4.8	1.9	ug/kg	
74-88-4	Methyl iodide	ND	9.7	1.1	ug/kg	
80-62-6	Methyl methacrylate	ND	4.8	1.7	ug/kg	
74-95-3	Methylene bromide	ND	4.8	1.4	ug/kg	
75-09-2	Methylene chloride [a]	11.3	9.7	4.4	ug/kg	
78-93-3	Methyl ethyl ketone	ND	24	5.9	ug/kg	
1634-04-4	Methyl Tert Butyl Ether	ND	4.8	1.9	ug/kg	
91-20-3	Naphthalene	ND	4.8	1.9	ug/kg	
76-01-7	Pentachloroethane	ND	24	4.8	ug/kg	
107-12-0	Propionitrile	ND	48	15	ug/kg	
103-65-1	n-Propylbenzene	ND	4.8	1.4	ug/kg	
100-42-5	Styrene	ND	4.8	2.5	ug/kg	
630-20-6	1,1,1,2-Tetrachloroethane	ND	4.8	0.97	ug/kg	
71-55-6	1,1,1-Trichloroethane	ND	4.8	1.1	ug/kg	
79-34-5	1,1,2,2-Tetrachloroethane	ND	4.8	1.2	ug/kg	
79-00-5	1,1,2-Trichloroethane	ND	4.8	1.1	ug/kg	
87-61-6	1,2,3-Trichlorobenzene	ND	4.8	0.97	ug/kg	
96-18-4	1,2,3-Trichloropropane	ND	4.8	1.6	ug/kg	
120-82-1	1,2,4-Trichlorobenzene	ND	4.8	1.2	ug/kg	

ND = Not detected MDL - Method Detection Limit
RL = Reporting Limit
E = Indicates value exceeds calibration range

J = Indicates an estimated value
B = Indicates analyte found in associated method blank
N = Indicates presumptive evidence of a compound

Report of Analysis

Client Sample ID:	SS39-DPT-10A		
Lab Sample ID:	F78009-16	**Date Sampled:**	11/11/10
Matrix:	SO - Soil	**Date Received:**	11/12/10
Method:	SW846 8260B	**Percent Solids:**	95.8
Project:	Holloman AFB; Alamogordo, NM		

VOA Special List

CAS No.	Compound	Result	RL	MDL	Units	Q
95-63-6	1,2,4-Trimethylbenzene	ND	4.8	1.1	ug/kg	
108-67-8	1,3,5-Trimethylbenzene	ND	4.8	1.3	ug/kg	
127-18-4	Tetrachloroethylene	ND	4.8	0.97	ug/kg	
108-88-3	Toluene	ND	4.8	1.2	ug/kg	
79-01-6	Trichloroethylene	ND	4.8	1.2	ug/kg	
75-69-4	Trichlorofluoromethane	ND	4.8	1.9	ug/kg	
110-57-6	Trans-1,4-Dichloro-2-Butene	ND	24	4.8	ug/kg	
75-01-4	Vinyl chloride	ND	4.8	1.4	ug/kg	
108-05-4	Vinyl Acetate	ND	24	13	ug/kg	
	m,p-Xylene	ND	9.7	2.1	ug/kg	
95-47-6	o-Xylene	ND	4.8	0.97	ug/kg	

CAS No.	Surrogate Recoveries	Run# 1	Run# 2	Limits
1868-53-7	Dibromofluoromethane	113%		80-121%
2037-26-5	Toluene-D8	80%		71-130%
460-00-4	4-Bromofluorobenzene	104%		59-148%
17060-07-0	1,2-Dichloroethane-D4	114%		77-123%

(a) ICV and BS outside of control limits. Suspected laboratory contaminant.

ND = Not detected MDL - Method Detection Limit
RL = Reporting Limit
E = Indicates value exceeds calibration range

J = Indicates an estimated value
B = Indicates analyte found in associated method blank
N = Indicates presumptive evidence of a compound

Report of Analysis

Client Sample ID:	SS39-DPT-10A		
Lab Sample ID:	F78009-16	**Date Sampled:**	11/11/10
Matrix:	SO - Soil	**Date Received:**	11/12/10
Method:	SW846 8015C	**Percent Solids:**	95.8
Project:	Holloman AFB; Alamogordo, NM		

	File ID	DF	Analyzed	By	Prep Date	Prep Batch	Analytical Batch
Run #1	QR056886.D	1	11/20/10	AH	n/a	n/a	GQR2474
Run #2							

	Initial Weight	Final Volume	Methanol Aliquot
Run #1	5.71 g	5.0 ml	100 ul
Run #2			

CAS No.	Compound	Result	RL	MDL	Units	Q
	TPH-GRO (C6-C10)	ND	4.8	2.4	mg/kg	

CAS No.	Surrogate Recoveries	Run# 1	Run# 2	Limits
460-00-4	4-Bromofluorobenzene	79%		56-136%
98-08-8	aaa-Trifluorotoluene	71%		61-121%

ND = Not detected MDL - Method Detection Limit
RL = Reporting Limit
E = Indicates value exceeds calibration range

J = Indicates an estimated value
B = Indicates analyte found in associated method blank
N = Indicates presumptive evidence of a compound

Report of Analysis

Client Sample ID:	SS39-DPT-10B		
Lab Sample ID:	F78009-17	**Date Sampled:**	11/11/10
Matrix:	SO - Soil	**Date Received:**	11/12/10
Method:	SW846 8260B	**Percent Solids:**	87.2
Project:	Holloman AFB; Alamogordo, NM		

	File ID	DF	Analyzed	By	Prep Date	Prep Batch	Analytical Batch
Run #1	H066181.D	1	11/19/10	MM	n/a	n/a	VH2464
Run #2							

	Initial Weight
Run #1	6.81 g
Run #2	

VOA Special List

CAS No.	Compound	Result	RL	MDL	Units	Q
67-64-1	Acetone	ND	42	17	ug/kg	
75-05-8	Acetonitrile	ND	42	15	ug/kg	
107-02-8	Acrolein	ND	21	9.3	ug/kg	
107-13-1	Acrylonitrile	ND	21	9.6	ug/kg	
107-05-1	Allyl chloride	ND	21	4.2	ug/kg	
71-43-2	Benzene	ND	4.2	1.3	ug/kg	
100-44-7	Benzyl Chloride	ND	4.2	1.3	ug/kg	
108-86-1	Bromobenzene	ND	4.2	1.2	ug/kg	
74-97-5	Bromochloromethane	ND	4.2	1.2	ug/kg	
75-27-4	Bromodichloromethane	ND	4.2	0.93	ug/kg	
75-25-2	Bromoform	ND	4.2	1.3	ug/kg	
104-51-8	n-Butylbenzene	ND	4.2	1.1	ug/kg	
135-98-8	sec-Butylbenzene	ND	4.2	1.3	ug/kg	
98-06-6	tert-Butylbenzene	ND	4.2	1.0	ug/kg	
108-90-7	Chlorobenzene	ND	4.2	0.84	ug/kg	
75-00-3	Chloroethane	ND	4.2	1.7	ug/kg	
67-66-3	Chloroform	ND	4.2	1.0	ug/kg	
544-10-5	1-Chlorohexane	ND	4.2	1.2	ug/kg	
95-49-8	o-Chlorotoluene	ND	4.2	1.0	ug/kg	
106-43-4	p-Chlorotoluene	ND	4.2	1.0	ug/kg	
110-75-8	2-Chloroethyl vinyl ether	ND	21	8.4	ug/kg	
75-15-0	Carbon disulfide	ND	4.2	1.7	ug/kg	
56-23-5	Carbon tetrachloride	ND	4.2	1.5	ug/kg	
75-34-3	1,1-Dichloroethane	ND	4.2	0.93	ug/kg	
75-35-4	1,1-Dichloroethylene	ND	4.2	1.2	ug/kg	
563-58-6	1,1-Dichloropropene	ND	4.2	1.1	ug/kg	
96-12-8	1,2-Dibromo-3-chloropropane	ND	4.2	1.9	ug/kg	
106-93-4	1,2-Dibromoethane	ND	4.2	0.84	ug/kg	
107-06-2	1,2-Dichloroethane	ND	4.2	0.84	ug/kg	
78-87-5	1,2-Dichloropropane	ND	4.2	1.0	ug/kg	
142-28-9	1,3-Dichloropropane	ND	4.2	0.84	ug/kg	
594-20-7	2,2-Dichloropropane	ND	4.2	1.2	ug/kg	

ND = Not detected MDL - Method Detection Limit
RL = Reporting Limit
E = Indicates value exceeds calibration range

J = Indicates an estimated value
B = Indicates analyte found in associated method blank
N = Indicates presumptive evidence of a compound

Report of Analysis

Client Sample ID:	SS39-DPT-10B		
Lab Sample ID:	F78009-17	**Date Sampled:**	11/11/10
Matrix:	SO - Soil	**Date Received:**	11/12/10
Method:	SW846 8260B	**Percent Solids:**	87.2
Project:	Holloman AFB; Alamogordo, NM		

VOA Special List

CAS No.	Compound	Result	RL	MDL	Units	Q
124-48-1	Dibromochloromethane	ND	4.2	0.84	ug/kg	
75-71-8	Dichlorodifluoromethane	ND	4.2	1.3	ug/kg	
156-59-2	cis-1,2-Dichloroethylene	ND	4.2	1.3	ug/kg	
10061-01-5	cis-1,3-Dichloropropene	ND	4.2	0.84	ug/kg	
1476-11-5	cis-1,4-Dichloro-2-Butene	ND	21	4.2	ug/kg	
541-73-1	m-Dichlorobenzene	ND	4.2	1.0	ug/kg	
95-50-1	o-Dichlorobenzene	ND	4.2	0.93	ug/kg	
106-46-7	p-Dichlorobenzene	ND	4.2	0.93	ug/kg	
156-60-5	trans-1,2-Dichloroethylene	ND	4.2	1.3	ug/kg	
10061-02-6	trans-1,3-Dichloropropene	ND	4.2	0.93	ug/kg	
100-41-4	Ethylbenzene	ND	4.2	0.84	ug/kg	
97-63-2	Ethyl methacrylate	ND	21	4.2	ug/kg	
76-13-1	Freon 113	ND	4.2	1.4	ug/kg	
591-78-6	2-Hexanone	ND	21	4.5	ug/kg	
87-68-3	Hexachlorobutadiene	ND	4.2	1.7	ug/kg	
110-54-3	Hexane	ND	4.2	1.6	ug/kg	
98-82-8	Isopropylbenzene	ND	4.2	0.93	ug/kg	
99-87-6	p-Isopropyltoluene	ND	4.2	1.0	ug/kg	
108-10-1	4-Methyl-2-pentanone	ND	21	4.6	ug/kg	
126-98-7	Methacrylonitrile	ND	21	7.7	ug/kg	
74-83-9	Methyl bromide	ND	4.2	1.7	ug/kg	
74-87-3	Methyl chloride	ND	4.2	1.7	ug/kg	
74-88-4	Methyl iodide	ND	8.4	0.93	ug/kg	
80-62-6	Methyl methacrylate	ND	4.2	1.5	ug/kg	
74-95-3	Methylene bromide	ND	4.2	1.3	ug/kg	
75-09-2	Methylene chloride [a]	9.4	8.4	3.9	ug/kg	
78-93-3	Methyl ethyl ketone	ND	21	5.1	ug/kg	
1634-04-4	Methyl Tert Butyl Ether	ND	4.2	1.7	ug/kg	
91-20-3	Naphthalene	ND	4.2	1.7	ug/kg	
76-01-7	Pentachloroethane	ND	21	4.2	ug/kg	
107-12-0	Propionitrile	ND	42	13	ug/kg	
103-65-1	n-Propylbenzene	ND	4.2	1.2	ug/kg	
100-42-5	Styrene	ND	4.2	2.2	ug/kg	
630-20-6	1,1,1,2-Tetrachloroethane	ND	4.2	0.84	ug/kg	
71-55-6	1,1,1-Trichloroethane	ND	4.2	0.93	ug/kg	
79-34-5	1,1,2,2-Tetrachloroethane	ND	4.2	1.0	ug/kg	
79-00-5	1,1,2-Trichloroethane	ND	4.2	0.93	ug/kg	
87-61-6	1,2,3-Trichlorobenzene	ND	4.2	0.84	ug/kg	
96-18-4	1,2,3-Trichloropropane	ND	4.2	1.4	ug/kg	
120-82-1	1,2,4-Trichlorobenzene	ND	4.2	1.0	ug/kg	

ND = Not detected MDL - Method Detection Limit
RL = Reporting Limit
E = Indicates value exceeds calibration range

J = Indicates an estimated value
B = Indicates analyte found in associated method blank
N = Indicates presumptive evidence of a compound

Report of Analysis

Client Sample ID:	SS39-DPT-10B		
Lab Sample ID:	F78009-17	**Date Sampled:**	11/11/10
Matrix:	SO - Soil	**Date Received:**	11/12/10
Method:	SW846 8260B	**Percent Solids:**	87.2
Project:	Holloman AFB; Alamogordo, NM		

VOA Special List

CAS No.	Compound	Result	RL	MDL	Units	Q
95-63-6	1,2,4-Trimethylbenzene	ND	4.2	0.93	ug/kg	
108-67-8	1,3,5-Trimethylbenzene	ND	4.2	1.1	ug/kg	
127-18-4	Tetrachloroethylene	8.0	4.2	0.84	ug/kg	
108-88-3	Toluene	ND	4.2	1.0	ug/kg	
79-01-6	Trichloroethylene	ND	4.2	1.0	ug/kg	
75-69-4	Trichlorofluoromethane	ND	4.2	1.7	ug/kg	
110-57-6	Trans-1,4-Dichloro-2-Butene	ND	21	4.2	ug/kg	
75-01-4	Vinyl chloride	ND	4.2	1.3	ug/kg	
108-05-4	Vinyl Acetate	ND	21	12	ug/kg	
	m,p-Xylene	ND	8.4	1.9	ug/kg	
95-47-6	o-Xylene	ND	4.2	0.84	ug/kg	

CAS No.	Surrogate Recoveries	Run# 1	Run# 2	Limits
1868-53-7	Dibromofluoromethane	118%		80-121%
2037-26-5	Toluene-D8	78%		71-130%
460-00-4	4-Bromofluorobenzene	101%		59-148%
17060-07-0	1,2-Dichloroethane-D4	122%		77-123%

(a) ICV and BS outside of control limits. Suspected laboratory contaminant.

ND = Not detected MDL - Method Detection Limit
RL = Reporting Limit
E = Indicates value exceeds calibration range

J = Indicates an estimated value
B = Indicates analyte found in associated method blank
N = Indicates presumptive evidence of a compound

Accutest Laboratories

Report of Analysis

Client Sample ID:	SS39-DPT-10B		
Lab Sample ID:	F78009-17	**Date Sampled:**	11/11/10
Matrix:	SO - Soil	**Date Received:**	11/12/10
Method:	SW846 8015C	**Percent Solids:**	87.2
Project:	Holloman AFB; Alamogordo, NM		

	File ID	DF	Analyzed	By	Prep Date	Prep Batch	Analytical Batch
Run #1	QR056887.D	1	11/20/10	AH	n/a	n/a	GQR2474
Run #2							

	Initial Weight	Final Volume	Methanol Aliquot
Run #1	6.56 g	5.0 ml	100 ul
Run #2			

CAS No.	Compound	Result	RL	MDL	Units	Q
	TPH-GRO (C6-C10)	ND	5.1	2.6	mg/kg	

CAS No.	Surrogate Recoveries	Run# 1	Run# 2	Limits
460-00-4	4-Bromofluorobenzene	79%		56-136%
98-08-8	aaa-Trifluorotoluene	71%		61-121%

ND = Not detected MDL - Method Detection Limit
RL = Reporting Limit
E = Indicates value exceeds calibration range

J = Indicates an estimated value
B = Indicates analyte found in associated method blank
N = Indicates presumptive evidence of a compound

Report of Analysis

Client Sample ID:	SS39-DPT-10C		
Lab Sample ID:	F78009-18	**Date Sampled:**	11/11/10
Matrix:	SO - Soil	**Date Received:**	11/12/10
Method:	SW846 8260B	**Percent Solids:**	89.9
Project:	Holloman AFB; Alamogordo, NM		

	File ID	DF	Analyzed	By	Prep Date	Prep Batch	Analytical Batch
Run #1	H066223.D	1	11/20/10	MM	n/a	n/a	VH2465
Run #2							

	Initial Weight
Run #1	6.22 g
Run #2	

VOA Special List

CAS No.	Compound	Result	RL	MDL	Units	Q
67-64-1	Acetone	ND	45	18	ug/kg	
75-05-8	Acetonitrile	ND	45	16	ug/kg	
107-02-8	Acrolein	ND	22	9.8	ug/kg	
107-13-1	Acrylonitrile	ND	22	10	ug/kg	
107-05-1	Allyl chloride	ND	22	4.5	ug/kg	
71-43-2	Benzene	ND	4.5	1.3	ug/kg	
100-44-7	Benzyl Chloride	ND	4.5	1.3	ug/kg	
108-86-1	Bromobenzene	ND	4.5	1.3	ug/kg	
74-97-5	Bromochloromethane	ND	4.5	1.3	ug/kg	
75-27-4	Bromodichloromethane	ND	4.5	0.98	ug/kg	
75-25-2	Bromoform	ND	4.5	1.3	ug/kg	
104-51-8	n-Butylbenzene	ND	4.5	1.2	ug/kg	
135-98-8	sec-Butylbenzene	ND	4.5	1.4	ug/kg	
98-06-6	tert-Butylbenzene	ND	4.5	1.1	ug/kg	
108-90-7	Chlorobenzene	ND	4.5	0.89	ug/kg	
75-00-3	Chloroethane	ND	4.5	1.8	ug/kg	
67-66-3	Chloroform	ND	4.5	1.1	ug/kg	
544-10-5	1-Chlorohexane	ND	4.5	1.3	ug/kg	
95-49-8	o-Chlorotoluene	ND	4.5	1.1	ug/kg	
106-43-4	p-Chlorotoluene	ND	4.5	1.1	ug/kg	
110-75-8	2-Chloroethyl vinyl ether	ND	22	8.9	ug/kg	
75-15-0	Carbon disulfide	ND	4.5	1.8	ug/kg	
56-23-5	Carbon tetrachloride	ND	4.5	1.6	ug/kg	
75-34-3	1,1-Dichloroethane	ND	4.5	0.98	ug/kg	
75-35-4	1,1-Dichloroethylene	ND	4.5	1.3	ug/kg	
563-58-6	1,1-Dichloropropene	ND	4.5	1.2	ug/kg	
96-12-8	1,2-Dibromo-3-chloropropane	ND	4.5	2.1	ug/kg	
106-93-4	1,2-Dibromoethane	ND	4.5	0.89	ug/kg	
107-06-2	1,2-Dichloroethane	ND	4.5	0.89	ug/kg	
78-87-5	1,2-Dichloropropane	ND	4.5	1.1	ug/kg	
142-28-9	1,3-Dichloropropane	ND	4.5	0.89	ug/kg	
594-20-7	2,2-Dichloropropane	ND	4.5	1.3	ug/kg	

ND = Not detected MDL - Method Detection Limit
RL = Reporting Limit
E = Indicates value exceeds calibration range

J = Indicates an estimated value
B = Indicates analyte found in associated method blank
N = Indicates presumptive evidence of a compound

Report of Analysis

Client Sample ID:	SS39-DPT-10C		
Lab Sample ID:	F78009-18	**Date Sampled:**	11/11/10
Matrix:	SO - Soil	**Date Received:**	11/12/10
Method:	SW846 8260B	**Percent Solids:**	89.9
Project:	Holloman AFB; Alamogordo, NM		

VOA Special List

CAS No.	Compound	Result	RL	MDL	Units	Q
124-48-1	Dibromochloromethane	ND	4.5	0.89	ug/kg	
75-71-8	Dichlorodifluoromethane	ND	4.5	1.3	ug/kg	
156-59-2	cis-1,2-Dichloroethylene	ND	4.5	1.3	ug/kg	
10061-01-5	cis-1,3-Dichloropropene	ND	4.5	0.89	ug/kg	
1476-11-5	cis-1,4-Dichloro-2-Butene	ND	22	4.5	ug/kg	
541-73-1	m-Dichlorobenzene	ND	4.5	1.1	ug/kg	
95-50-1	o-Dichlorobenzene	ND	4.5	0.98	ug/kg	
106-46-7	p-Dichlorobenzene	ND	4.5	0.98	ug/kg	
156-60-5	trans-1,2-Dichloroethylene	ND	4.5	1.3	ug/kg	
10061-02-6	trans-1,3-Dichloropropene	ND	4.5	0.98	ug/kg	
100-41-4	Ethylbenzene	ND	4.5	0.89	ug/kg	
97-63-2	Ethyl methacrylate	ND	22	4.5	ug/kg	
76-13-1	Freon 113	ND	4.5	1.5	ug/kg	
591-78-6	2-Hexanone	ND	22	4.8	ug/kg	
87-68-3	Hexachlorobutadiene	ND	4.5	1.8	ug/kg	
110-54-3	Hexane	ND	4.5	1.7	ug/kg	
98-82-8	Isopropylbenzene	ND	4.5	0.98	ug/kg	
99-87-6	p-Isopropyltoluene	ND	4.5	1.1	ug/kg	
108-10-1	4-Methyl-2-pentanone	ND	22	4.9	ug/kg	
126-98-7	Methacrylonitrile	ND	22	8.2	ug/kg	
74-83-9	Methyl bromide	ND	4.5	1.8	ug/kg	
74-87-3	Methyl chloride	ND	4.5	1.8	ug/kg	
74-88-4	Methyl iodide	ND	8.9	0.98	ug/kg	
80-62-6	Methyl methacrylate	ND	4.5	1.6	ug/kg	
74-95-3	Methylene bromide	ND	4.5	1.3	ug/kg	
75-09-2	Methylene chloride [a]	15.5	8.9	4.1	ug/kg	B
78-93-3	Methyl ethyl ketone	ND	22	5.5	ug/kg	
1634-04-4	Methyl Tert Butyl Ether	ND	4.5	1.8	ug/kg	
91-20-3	Naphthalene	ND	4.5	1.8	ug/kg	
76-01-7	Pentachloroethane	ND	22	4.5	ug/kg	
107-12-0	Propionitrile	ND	45	14	ug/kg	
103-65-1	n-Propylbenzene	ND	4.5	1.3	ug/kg	
100-42-5	Styrene	ND	4.5	2.3	ug/kg	
630-20-6	1,1,1,2-Tetrachloroethane	ND	4.5	0.89	ug/kg	
71-55-6	1,1,1-Trichloroethane	ND	4.5	0.98	ug/kg	
79-34-5	1,1,2,2-Tetrachloroethane	ND	4.5	1.1	ug/kg	
79-00-5	1,1,2-Trichloroethane	ND	4.5	0.98	ug/kg	
87-61-6	1,2,3-Trichlorobenzene	ND	4.5	0.89	ug/kg	
96-18-4	1,2,3-Trichloropropane	ND	4.5	1.5	ug/kg	
120-82-1	1,2,4-Trichlorobenzene	ND	4.5	1.1	ug/kg	

ND = Not detected MDL - Method Detection Limit
RL = Reporting Limit
E = Indicates value exceeds calibration range

J = Indicates an estimated value
B = Indicates analyte found in associated method blank
N = Indicates presumptive evidence of a compound

Report of Analysis

Client Sample ID:	SS39-DPT-10C		
Lab Sample ID:	F78009-18	**Date Sampled:**	11/11/10
Matrix:	SO - Soil	**Date Received:**	11/12/10
Method:	SW846 8260B	**Percent Solids:**	89.9
Project:	Holloman AFB; Alamogordo, NM		

VOA Special List

CAS No.	Compound	Result	RL	MDL	Units	Q
95-63-6	1,2,4-Trimethylbenzene	ND	4.5	0.98	ug/kg	
108-67-8	1,3,5-Trimethylbenzene	ND	4.5	1.2	ug/kg	
127-18-4	Tetrachloroethylene	1.7	4.5	0.89	ug/kg	J
108-88-3	Toluene	ND	4.5	1.1	ug/kg	
79-01-6	Trichloroethylene	ND	4.5	1.1	ug/kg	
75-69-4	Trichlorofluoromethane	ND	4.5	1.8	ug/kg	
110-57-6	Trans-1,4-Dichloro-2-Butene	ND	22	4.5	ug/kg	
75-01-4	Vinyl chloride	ND	4.5	1.3	ug/kg	
108-05-4	Vinyl Acetate	ND	22	12	ug/kg	
	m,p-Xylene	ND	8.9	2.0	ug/kg	
95-47-6	o-Xylene	ND	4.5	0.89	ug/kg	

CAS No.	Surrogate Recoveries	Run# 1	Run# 2	Limits
1868-53-7	Dibromofluoromethane	112%		80-121%
2037-26-5	Toluene-D8	80%		71-130%
460-00-4	4-Bromofluorobenzene	93%		59-148%
17060-07-0	1,2-Dichloroethane-D4	107%		77-123%

(a) ICV outside of control limits. Suspected laboratory contaminant.

ND = Not detected MDL - Method Detection Limit
RL = Reporting Limit
E = Indicates value exceeds calibration range

J = Indicates an estimated value
B = Indicates analyte found in associated method blank
N = Indicates presumptive evidence of a compound

Report of Analysis

Client Sample ID:	SS39-DPT-10C		
Lab Sample ID:	F78009-18	**Date Sampled:**	11/11/10
Matrix:	SO - Soil	**Date Received:**	11/12/10
Method:	SW846 8015C	**Percent Solids:**	89.9
Project:	Holloman AFB; Alamogordo, NM		

	File ID	DF	Analyzed	By	Prep Date	Prep Batch	Analytical Batch
Run #1	QR056888.D	1	11/20/10	AH	n/a	n/a	GQR2474
Run #2							

	Initial Weight	Final Volume	Methanol Aliquot
Run #1	7.34 g	5.0 ml	100 ul
Run #2			

CAS No.	Compound	Result	RL	MDL	Units	Q
	TPH-GRO (C6-C10)	ND	4.4	2.2	mg/kg	

CAS No.	Surrogate Recoveries	Run# 1	Run# 2	Limits
460-00-4	4-Bromofluorobenzene	81%		56-136%
98-08-8	aaa-Trifluorotoluene	73%		61-121%

ND = Not detected MDL - Method Detection Limit
RL = Reporting Limit
E = Indicates value exceeds calibration range

J = Indicates an estimated value
B = Indicates analyte found in associated method blank
N = Indicates presumptive evidence of a compound

Report of Analysis

Client Sample ID:	SS39-DPT-11A		
Lab Sample ID:	F78009-19	**Date Sampled:**	11/11/10
Matrix:	SO - Soil	**Date Received:**	11/12/10
Method:	SW846 8260B	**Percent Solids:**	93.3
Project:	Holloman AFB; Alamogordo, NM		

	File ID	DF	Analyzed	By	Prep Date	Prep Batch	Analytical Batch
Run #1	H066224.D	1	11/20/10	MM	n/a	n/a	VH2465
Run #2							

	Initial Weight
Run #1	7.33 g
Run #2	

VOA Special List

CAS No.	Compound	Result	RL	MDL	Units	Q
67-64-1	Acetone	ND	37	15	ug/kg	
75-05-8	Acetonitrile	ND	37	13	ug/kg	
107-02-8	Acrolein	ND	18	8.0	ug/kg	
107-13-1	Acrylonitrile	ND	18	8.3	ug/kg	
107-05-1	Allyl chloride	ND	18	3.7	ug/kg	
71-43-2	Benzene	ND	3.7	1.1	ug/kg	
100-44-7	Benzyl Chloride	ND	3.7	1.1	ug/kg	
108-86-1	Bromobenzene	ND	3.7	1.0	ug/kg	
74-97-5	Bromochloromethane	ND	3.7	1.0	ug/kg	
75-27-4	Bromodichloromethane	ND	3.7	0.80	ug/kg	
75-25-2	Bromoform	ND	3.7	1.1	ug/kg	
104-51-8	n-Butylbenzene	ND	3.7	0.95	ug/kg	
135-98-8	sec-Butylbenzene	ND	3.7	1.2	ug/kg	
98-06-6	tert-Butylbenzene	ND	3.7	0.88	ug/kg	
108-90-7	Chlorobenzene	ND	3.7	0.73	ug/kg	
75-00-3	Chloroethane	ND	3.7	1.5	ug/kg	
67-66-3	Chloroform	ND	3.7	0.88	ug/kg	
544-10-5	1-Chlorohexane	ND	3.7	1.0	ug/kg	
95-49-8	o-Chlorotoluene	ND	3.7	0.88	ug/kg	
106-43-4	p-Chlorotoluene	ND	3.7	0.88	ug/kg	
110-75-8	2-Chloroethyl vinyl ether	ND	18	7.3	ug/kg	
75-15-0	Carbon disulfide	ND	3.7	1.5	ug/kg	
56-23-5	Carbon tetrachloride	ND	3.7	1.3	ug/kg	
75-34-3	1,1-Dichloroethane	ND	3.7	0.80	ug/kg	
75-35-4	1,1-Dichloroethylene	ND	3.7	1.0	ug/kg	
563-58-6	1,1-Dichloropropene	ND	3.7	0.95	ug/kg	
96-12-8	1,2-Dibromo-3-chloropropane	ND	3.7	1.7	ug/kg	
106-93-4	1,2-Dibromoethane	ND	3.7	0.73	ug/kg	
107-06-2	1,2-Dichloroethane	ND	3.7	0.73	ug/kg	
78-87-5	1,2-Dichloropropane	ND	3.7	0.88	ug/kg	
142-28-9	1,3-Dichloropropane	ND	3.7	0.73	ug/kg	
594-20-7	2,2-Dichloropropane	ND	3.7	1.0	ug/kg	

ND = Not detected MDL - Method Detection Limit
RL = Reporting Limit
E = Indicates value exceeds calibration range

J = Indicates an estimated value
B = Indicates analyte found in associated method blank
N = Indicates presumptive evidence of a compound

Report of Analysis

Client Sample ID:	SS39-DPT-11A		
Lab Sample ID:	F78009-19	**Date Sampled:**	11/11/10
Matrix:	SO - Soil	**Date Received:**	11/12/10
Method:	SW846 8260B	**Percent Solids:**	93.3
Project:	Holloman AFB; Alamogordo, NM		

VOA Special List

CAS No.	Compound	Result	RL	MDL	Units	Q
124-48-1	Dibromochloromethane	ND	3.7	0.73	ug/kg	
75-71-8	Dichlorodifluoromethane	ND	3.7	1.1	ug/kg	
156-59-2	cis-1,2-Dichloroethylene	ND	3.7	1.1	ug/kg	
10061-01-5	cis-1,3-Dichloropropene	ND	3.7	0.73	ug/kg	
1476-11-5	cis-1,4-Dichloro-2-Butene	ND	18	3.7	ug/kg	
541-73-1	m-Dichlorobenzene	ND	3.7	0.88	ug/kg	
95-50-1	o-Dichlorobenzene	ND	3.7	0.80	ug/kg	
106-46-7	p-Dichlorobenzene	ND	3.7	0.80	ug/kg	
156-60-5	trans-1,2-Dichloroethylene	ND	3.7	1.1	ug/kg	
10061-02-6	trans-1,3-Dichloropropene	ND	3.7	0.80	ug/kg	
100-41-4	Ethylbenzene	ND	3.7	0.73	ug/kg	
97-63-2	Ethyl methacrylate	ND	18	3.7	ug/kg	
76-13-1	Freon 113	ND	3.7	1.2	ug/kg	
591-78-6	2-Hexanone	ND	18	3.9	ug/kg	
87-68-3	Hexachlorobutadiene	ND	3.7	1.5	ug/kg	
110-54-3	Hexane	ND	3.7	1.4	ug/kg	
98-82-8	Isopropylbenzene	ND	3.7	0.80	ug/kg	
99-87-6	p-Isopropyltoluene	ND	3.7	0.88	ug/kg	
108-10-1	4-Methyl-2-pentanone	ND	18	4.0	ug/kg	
126-98-7	Methacrylonitrile	ND	18	6.7	ug/kg	
74-83-9	Methyl bromide	ND	3.7	1.5	ug/kg	
74-87-3	Methyl chloride	ND	3.7	1.5	ug/kg	
74-88-4	Methyl iodide	ND	7.3	0.80	ug/kg	
80-62-6	Methyl methacrylate	ND	3.7	1.3	ug/kg	
74-95-3	Methylene bromide	ND	3.7	1.1	ug/kg	
75-09-2	Methylene chloride [a]	7.5	7.3	3.4	ug/kg	B
78-93-3	Methyl ethyl ketone	ND	18	4.5	ug/kg	
1634-04-4	Methyl Tert Butyl Ether	ND	3.7	1.5	ug/kg	
91-20-3	Naphthalene	ND	3.7	1.5	ug/kg	
76-01-7	Pentachloroethane	ND	18	3.7	ug/kg	
107-12-0	Propionitrile	ND	37	12	ug/kg	
103-65-1	n-Propylbenzene	ND	3.7	1.0	ug/kg	
100-42-5	Styrene	ND	3.7	1.9	ug/kg	
630-20-6	1,1,1,2-Tetrachloroethane	ND	3.7	0.73	ug/kg	
71-55-6	1,1,1-Trichloroethane	ND	3.7	0.80	ug/kg	
79-34-5	1,1,2,2-Tetrachloroethane	ND	3.7	0.88	ug/kg	
79-00-5	1,1,2-Trichloroethane	ND	3.7	0.80	ug/kg	
87-61-6	1,2,3-Trichlorobenzene	ND	3.7	0.73	ug/kg	
96-18-4	1,2,3-Trichloropropane	ND	3.7	1.2	ug/kg	
120-82-1	1,2,4-Trichlorobenzene	ND	3.7	0.88	ug/kg	

ND = Not detected MDL - Method Detection Limit
RL = Reporting Limit
E = Indicates value exceeds calibration range

J = Indicates an estimated value
B = Indicates analyte found in associated method blank
N = Indicates presumptive evidence of a compound

Report of Analysis

Client Sample ID:	SS39-DPT-11A		
Lab Sample ID:	F78009-19	**Date Sampled:**	11/11/10
Matrix:	SO - Soil	**Date Received:**	11/12/10
Method:	SW846 8260B	**Percent Solids:**	93.3
Project:	Holloman AFB; Alamogordo, NM		

VOA Special List

CAS No.	Compound	Result	RL	MDL	Units	Q
95-63-6	1,2,4-Trimethylbenzene	ND	3.7	0.80	ug/kg	
108-67-8	1,3,5-Trimethylbenzene	ND	3.7	0.95	ug/kg	
127-18-4	Tetrachloroethylene	ND	3.7	0.73	ug/kg	
108-88-3	Toluene	ND	3.7	0.88	ug/kg	
79-01-6	Trichloroethylene	ND	3.7	0.88	ug/kg	
75-69-4	Trichlorofluoromethane	ND	3.7	1.5	ug/kg	
110-57-6	Trans-1,4-Dichloro-2-Butene	ND	18	3.7	ug/kg	
75-01-4	Vinyl chloride	ND	3.7	1.1	ug/kg	
108-05-4	Vinyl Acetate	ND	18	10	ug/kg	
	m,p-Xylene	ND	7.3	1.6	ug/kg	
95-47-6	o-Xylene	ND	3.7	0.73	ug/kg	

CAS No.	Surrogate Recoveries	Run# 1	Run# 2	Limits
1868-53-7	Dibromofluoromethane	115%		80-121%
2037-26-5	Toluene-D8	76%		71-130%
460-00-4	4-Bromofluorobenzene	100%		59-148%
17060-07-0	1,2-Dichloroethane-D4	115%		77-123%

(a) ICV outside of control limits. Suspected laboratory contaminant.

ND = Not detected MDL - Method Detection Limit
RL = Reporting Limit
E = Indicates value exceeds calibration range

J = Indicates an estimated value
B = Indicates analyte found in associated method blank
N = Indicates presumptive evidence of a compound

Report of Analysis

Client Sample ID:	SS39-DPT-11A		
Lab Sample ID:	F78009-19	**Date Sampled:**	11/11/10
Matrix:	SO - Soil	**Date Received:**	11/12/10
Method:	SW846 8015C	**Percent Solids:**	93.3
Project:	Holloman AFB; Alamogordo, NM		

	File ID	DF	Analyzed	By	Prep Date	Prep Batch	Analytical Batch
Run #1	QR056891.D	1	11/20/10	AH	n/a	n/a	GQR2474
Run #2							

	Initial Weight	Final Volume	Methanol Aliquot
Run #1	7.04 g	5.0 ml	100 ul
Run #2			

CAS No.	Compound	Result	RL	MDL	Units	Q
	TPH-GRO (C6-C10)	ND	4.2	2.1	mg/kg	

CAS No.	Surrogate Recoveries	Run# 1	Run# 2	Limits
460-00-4	4-Bromofluorobenzene	82%		56-136%
98-08-8	aaa-Trifluorotoluene	75%		61-121%

ND = Not detected MDL - Method Detection Limit
RL = Reporting Limit
E = Indicates value exceeds calibration range

J = Indicates an estimated value
B = Indicates analyte found in associated method blank
N = Indicates presumptive evidence of a compound

Report of Analysis

Client Sample ID:	SS39-DPT-11B		
Lab Sample ID:	F78009-20	**Date Sampled:**	11/11/10
Matrix:	SO - Soil	**Date Received:**	11/12/10
Method:	SW846 8260B	**Percent Solids:**	92.9
Project:	Holloman AFB; Alamogordo, NM		

	File ID	DF	Analyzed	By	Prep Date	Prep Batch	Analytical Batch
Run #1	H066225.D	1	11/20/10	MM	n/a	n/a	VH2465
Run #2							

	Initial Weight
Run #1	7.11 g
Run #2	

VOA Special List

CAS No.	Compound	Result	RL	MDL	Units	Q
67-64-1	Acetone	ND	38	15	ug/kg	
75-05-8	Acetonitrile	ND	38	14	ug/kg	
107-02-8	Acrolein	ND	19	8.3	ug/kg	
107-13-1	Acrylonitrile	ND	19	8.6	ug/kg	
107-05-1	Allyl chloride	ND	19	3.8	ug/kg	
71-43-2	Benzene	ND	3.8	1.1	ug/kg	
100-44-7	Benzyl Chloride	ND	3.8	1.1	ug/kg	
108-86-1	Bromobenzene	ND	3.8	1.1	ug/kg	
74-97-5	Bromochloromethane	ND	3.8	1.1	ug/kg	
75-27-4	Bromodichloromethane	ND	3.8	0.83	ug/kg	
75-25-2	Bromoform	ND	3.8	1.1	ug/kg	
104-51-8	n-Butylbenzene	ND	3.8	0.98	ug/kg	
135-98-8	sec-Butylbenzene	ND	3.8	1.2	ug/kg	
98-06-6	tert-Butylbenzene	ND	3.8	0.91	ug/kg	
108-90-7	Chlorobenzene	ND	3.8	0.76	ug/kg	
75-00-3	Chloroethane	ND	3.8	1.5	ug/kg	
67-66-3	Chloroform	ND	3.8	0.91	ug/kg	
544-10-5	1-Chlorohexane	ND	3.8	1.1	ug/kg	
95-49-8	o-Chlorotoluene	ND	3.8	0.91	ug/kg	
106-43-4	p-Chlorotoluene	ND	3.8	0.91	ug/kg	
110-75-8	2-Chloroethyl vinyl ether	ND	19	7.6	ug/kg	
75-15-0	Carbon disulfide	ND	3.8	1.5	ug/kg	
56-23-5	Carbon tetrachloride	ND	3.8	1.4	ug/kg	
75-34-3	1,1-Dichloroethane	ND	3.8	0.83	ug/kg	
75-35-4	1,1-Dichloroethylene	ND	3.8	1.1	ug/kg	
563-58-6	1,1-Dichloropropene	ND	3.8	0.98	ug/kg	
96-12-8	1,2-Dibromo-3-chloropropane	ND	3.8	1.7	ug/kg	
106-93-4	1,2-Dibromoethane	ND	3.8	0.76	ug/kg	
107-06-2	1,2-Dichloroethane	ND	3.8	0.76	ug/kg	
78-87-5	1,2-Dichloropropane	ND	3.8	0.91	ug/kg	
142-28-9	1,3-Dichloropropane	ND	3.8	0.76	ug/kg	
594-20-7	2,2-Dichloropropane	ND	3.8	1.1	ug/kg	

ND = Not detected MDL - Method Detection Limit
RL = Reporting Limit
E = Indicates value exceeds calibration range

J = Indicates an estimated value
B = Indicates analyte found in associated method blank
N = Indicates presumptive evidence of a compound

Report of Analysis

Client Sample ID:	SS39-DPT-11B		
Lab Sample ID:	F78009-20	**Date Sampled:**	11/11/10
Matrix:	SO - Soil	**Date Received:**	11/12/10
Method:	SW846 8260B	**Percent Solids:**	92.9
Project:	Holloman AFB; Alamogordo, NM		

VOA Special List

CAS No.	Compound	Result	RL	MDL	Units	Q
124-48-1	Dibromochloromethane	ND	3.8	0.76	ug/kg	
75-71-8	Dichlorodifluoromethane	ND	3.8	1.1	ug/kg	
156-59-2	cis-1,2-Dichloroethylene	ND	3.8	1.1	ug/kg	
10061-01-5	cis-1,3-Dichloropropene	ND	3.8	0.76	ug/kg	
1476-11-5	cis-1,4-Dichloro-2-Butene	ND	19	3.8	ug/kg	
541-73-1	m-Dichlorobenzene	ND	3.8	0.91	ug/kg	
95-50-1	o-Dichlorobenzene	ND	3.8	0.83	ug/kg	
106-46-7	p-Dichlorobenzene	ND	3.8	0.83	ug/kg	
156-60-5	trans-1,2-Dichloroethylene	ND	3.8	1.1	ug/kg	
10061-02-6	trans-1,3-Dichloropropene	ND	3.8	0.83	ug/kg	
100-41-4	Ethylbenzene	ND	3.8	0.76	ug/kg	
97-63-2	Ethyl methacrylate	ND	19	3.8	ug/kg	
76-13-1	Freon 113	ND	3.8	1.3	ug/kg	
591-78-6	2-Hexanone	ND	19	4.1	ug/kg	
87-68-3	Hexachlorobutadiene	ND	3.8	1.5	ug/kg	
110-54-3	Hexane	ND	3.8	1.4	ug/kg	
98-82-8	Isopropylbenzene	ND	3.8	0.83	ug/kg	
99-87-6	p-Isopropyltoluene	ND	3.8	0.91	ug/kg	
108-10-1	4-Methyl-2-pentanone	ND	19	4.2	ug/kg	
126-98-7	Methacrylonitrile	ND	19	7.0	ug/kg	
74-83-9	Methyl bromide	ND	3.8	1.5	ug/kg	
74-87-3	Methyl chloride	ND	3.8	1.5	ug/kg	
74-88-4	Methyl iodide	ND	7.6	0.83	ug/kg	
80-62-6	Methyl methacrylate	ND	3.8	1.4	ug/kg	
74-95-3	Methylene bromide	ND	3.8	1.1	ug/kg	
75-09-2	Methylene chloride [a]	7.7	7.6	3.5	ug/kg	B
78-93-3	Methyl ethyl ketone	ND	19	4.6	ug/kg	
1634-04-4	Methyl Tert Butyl Ether	ND	3.8	1.5	ug/kg	
91-20-3	Naphthalene	ND	3.8	1.5	ug/kg	
76-01-7	Pentachloroethane	ND	19	3.8	ug/kg	
107-12-0	Propionitrile	ND	38	12	ug/kg	
103-65-1	n-Propylbenzene	ND	3.8	1.1	ug/kg	
100-42-5	Styrene	ND	3.8	2.0	ug/kg	
630-20-6	1,1,1,2-Tetrachloroethane	ND	3.8	0.76	ug/kg	
71-55-6	1,1,1-Trichloroethane	ND	3.8	0.83	ug/kg	
79-34-5	1,1,2,2-Tetrachloroethane	ND	3.8	0.91	ug/kg	
79-00-5	1,1,2-Trichloroethane	ND	3.8	0.83	ug/kg	
87-61-6	1,2,3-Trichlorobenzene	ND	3.8	0.76	ug/kg	
96-18-4	1,2,3-Trichloropropane	ND	3.8	1.3	ug/kg	
120-82-1	1,2,4-Trichlorobenzene	ND	3.8	0.91	ug/kg	

ND = Not detected MDL - Method Detection Limit
RL = Reporting Limit
E = Indicates value exceeds calibration range

J = Indicates an estimated value
B = Indicates analyte found in associated method blank
N = Indicates presumptive evidence of a compound

Report of Analysis

Client Sample ID:	SS39-DPT-11B		
Lab Sample ID:	F78009-20	**Date Sampled:**	11/11/10
Matrix:	SO - Soil	**Date Received:**	11/12/10
Method:	SW846 8260B	**Percent Solids:**	92.9
Project:	Holloman AFB; Alamogordo, NM		

VOA Special List

CAS No.	Compound	Result	RL	MDL	Units	Q
95-63-6	1,2,4-Trimethylbenzene	ND	3.8	0.83	ug/kg	
108-67-8	1,3,5-Trimethylbenzene	ND	3.8	0.98	ug/kg	
127-18-4	Tetrachloroethylene	ND	3.8	0.76	ug/kg	
108-88-3	Toluene	ND	3.8	0.91	ug/kg	
79-01-6	Trichloroethylene	ND	3.8	0.91	ug/kg	
75-69-4	Trichlorofluoromethane	ND	3.8	1.5	ug/kg	
110-57-6	Trans-1,4-Dichloro-2-Butene	ND	19	3.8	ug/kg	
75-01-4	Vinyl chloride	ND	3.8	1.1	ug/kg	
108-05-4	Vinyl Acetate	ND	19	11	ug/kg	
	m,p-Xylene	ND	7.6	1.7	ug/kg	
95-47-6	o-Xylene	ND	3.8	0.76	ug/kg	

CAS No.	Surrogate Recoveries	Run# 1	Run# 2	Limits
1868-53-7	Dibromofluoromethane	118%		80-121%
2037-26-5	Toluene-D8	75%		71-130%
460-00-4	4-Bromofluorobenzene	98%		59-148%
17060-07-0	1,2-Dichloroethane-D4	119%		77-123%

(a) ICV outside of control limits. Suspected laboratory contaminant.

ND = Not detected MDL - Method Detection Limit
RL = Reporting Limit
E = Indicates value exceeds calibration range

J = Indicates an estimated value
B = Indicates analyte found in associated method blank
N = Indicates presumptive evidence of a compound

Accutest Laboratories

Report of Analysis

Client Sample ID:	SS39-DPT-11B		
Lab Sample ID:	F78009-20	**Date Sampled:**	11/11/10
Matrix:	SO - Soil	**Date Received:**	11/12/10
Method:	SW846 8015C	**Percent Solids:**	92.9
Project:	Holloman AFB; Alamogordo, NM		

	File ID	DF	Analyzed	By	Prep Date	Prep Batch	Analytical Batch
Run #1	QR056892.D	1	11/20/10	AH	n/a	n/a	GQR2474
Run #2							

	Initial Weight	Final Volume	Methanol Aliquot
Run #1	3.95 g	5.0 ml	100 ul
Run #2			

CAS No.	Compound	Result	RL	MDL	Units	Q
	TPH-GRO (C6-C10)	ND	7.2	3.6	mg/kg	

CAS No.	Surrogate Recoveries	Run# 1	Run# 2	Limits
460-00-4	4-Bromofluorobenzene	77%		56-136%
98-08-8	aaa-Trifluorotoluene	69%		61-121%

ND = Not detected MDL - Method Detection Limit
RL = Reporting Limit
E = Indicates value exceeds calibration range

J = Indicates an estimated value
B = Indicates analyte found in associated method blank
N = Indicates presumptive evidence of a compound

Report of Analysis

Client Sample ID:	SS39-DPT-11C		
Lab Sample ID:	F78009-21	**Date Sampled:**	11/11/10
Matrix:	SO - Soil	**Date Received:**	11/12/10
Method:	SW846 8260B	**Percent Solids:**	88.8
Project:	Holloman AFB; Alamogordo, NM		

	File ID	DF	Analyzed	By	Prep Date	Prep Batch	Analytical Batch
Run #1	H066185.D	1	11/19/10	MM	n/a	n/a	VH2464
Run #2							

	Initial Weight
Run #1	6.63 g
Run #2	

VOA Special List

CAS No.	Compound	Result	RL	MDL	Units	Q
67-64-1	Acetone	ND	42	17	ug/kg	
75-05-8	Acetonitrile	ND	42	15	ug/kg	
107-02-8	Acrolein	ND	21	9.3	ug/kg	
107-13-1	Acrylonitrile	ND	21	9.7	ug/kg	
107-05-1	Allyl chloride	ND	21	4.2	ug/kg	
71-43-2	Benzene	ND	4.2	1.3	ug/kg	
100-44-7	Benzyl Chloride	ND	4.2	1.3	ug/kg	
108-86-1	Bromobenzene	ND	4.2	1.2	ug/kg	
74-97-5	Bromochloromethane	ND	4.2	1.2	ug/kg	
75-27-4	Bromodichloromethane	ND	4.2	0.93	ug/kg	
75-25-2	Bromoform	ND	4.2	1.3	ug/kg	
104-51-8	n-Butylbenzene	ND	4.2	1.1	ug/kg	
135-98-8	sec-Butylbenzene	ND	4.2	1.4	ug/kg	
98-06-6	tert-Butylbenzene	ND	4.2	1.0	ug/kg	
108-90-7	Chlorobenzene	ND	4.2	0.85	ug/kg	
75-00-3	Chloroethane	ND	4.2	1.7	ug/kg	
67-66-3	Chloroform	ND	4.2	1.0	ug/kg	
544-10-5	1-Chlorohexane	ND	4.2	1.2	ug/kg	
95-49-8	o-Chlorotoluene	ND	4.2	1.0	ug/kg	
106-43-4	p-Chlorotoluene	ND	4.2	1.0	ug/kg	
110-75-8	2-Chloroethyl vinyl ether	ND	21	8.5	ug/kg	
75-15-0	Carbon disulfide	ND	4.2	1.7	ug/kg	
56-23-5	Carbon tetrachloride	ND	4.2	1.5	ug/kg	
75-34-3	1,1-Dichloroethane	ND	4.2	0.93	ug/kg	
75-35-4	1,1-Dichloroethylene	ND	4.2	1.2	ug/kg	
563-58-6	1,1-Dichloropropene	ND	4.2	1.1	ug/kg	
96-12-8	1,2-Dibromo-3-chloropropane	ND	4.2	2.0	ug/kg	
106-93-4	1,2-Dibromoethane	ND	4.2	0.85	ug/kg	
107-06-2	1,2-Dichloroethane	ND	4.2	0.85	ug/kg	
78-87-5	1,2-Dichloropropane	ND	4.2	1.0	ug/kg	
142-28-9	1,3-Dichloropropane	ND	4.2	0.85	ug/kg	
594-20-7	2,2-Dichloropropane	ND	4.2	1.2	ug/kg	

ND = Not detected MDL - Method Detection Limit
RL = Reporting Limit
E = Indicates value exceeds calibration range

J = Indicates an estimated value
B = Indicates analyte found in associated method blank
N = Indicates presumptive evidence of a compound

Report of Analysis

Client Sample ID:	SS39-DPT-11C		
Lab Sample ID:	F78009-21	**Date Sampled:**	11/11/10
Matrix:	SO - Soil	**Date Received:**	11/12/10
Method:	SW846 8260B	**Percent Solids:**	88.8
Project:	Holloman AFB; Alamogordo, NM		

VOA Special List

CAS No.	Compound	Result	RL	MDL	Units	Q
124-48-1	Dibromochloromethane	ND	4.2	0.85	ug/kg	
75-71-8	Dichlorodifluoromethane	ND	4.2	1.3	ug/kg	
156-59-2	cis-1,2-Dichloroethylene	ND	4.2	1.3	ug/kg	
10061-01-5	cis-1,3-Dichloropropene	ND	4.2	0.85	ug/kg	
1476-11-5	cis-1,4-Dichloro-2-Butene	ND	21	4.2	ug/kg	
541-73-1	m-Dichlorobenzene	ND	4.2	1.0	ug/kg	
95-50-1	o-Dichlorobenzene	ND	4.2	0.93	ug/kg	
106-46-7	p-Dichlorobenzene	ND	4.2	0.93	ug/kg	
156-60-5	trans-1,2-Dichloroethylene	ND	4.2	1.3	ug/kg	
10061-02-6	trans-1,3-Dichloropropene	ND	4.2	0.93	ug/kg	
100-41-4	Ethylbenzene	ND	4.2	0.85	ug/kg	
97-63-2	Ethyl methacrylate	ND	21	4.2	ug/kg	
76-13-1	Freon 113	ND	4.2	1.4	ug/kg	
591-78-6	2-Hexanone	ND	21	4.6	ug/kg	
87-68-3	Hexachlorobutadiene	ND	4.2	1.7	ug/kg	
110-54-3	Hexane	ND	4.2	1.6	ug/kg	
98-82-8	Isopropylbenzene	ND	4.2	0.93	ug/kg	
99-87-6	p-Isopropyltoluene	ND	4.2	1.0	ug/kg	
108-10-1	4-Methyl-2-pentanone	ND	21	4.7	ug/kg	
126-98-7	Methacrylonitrile	ND	21	7.8	ug/kg	
74-83-9	Methyl bromide	ND	4.2	1.7	ug/kg	
74-87-3	Methyl chloride	ND	4.2	1.7	ug/kg	
74-88-4	Methyl iodide	ND	8.5	0.93	ug/kg	
80-62-6	Methyl methacrylate	ND	4.2	1.5	ug/kg	
74-95-3	Methylene bromide	ND	4.2	1.3	ug/kg	
75-09-2	Methylene chloride [a]	10.2	8.5	3.9	ug/kg	
78-93-3	Methyl ethyl ketone	ND	21	5.2	ug/kg	
1634-04-4	Methyl Tert Butyl Ether	ND	4.2	1.7	ug/kg	
91-20-3	Naphthalene	ND	4.2	1.7	ug/kg	
76-01-7	Pentachloroethane	ND	21	4.2	ug/kg	
107-12-0	Propionitrile	ND	42	14	ug/kg	
103-65-1	n-Propylbenzene	ND	4.2	1.2	ug/kg	
100-42-5	Styrene	ND	4.2	2.2	ug/kg	
630-20-6	1,1,1,2-Tetrachloroethane	ND	4.2	0.85	ug/kg	
71-55-6	1,1,1-Trichloroethane	ND	4.2	0.93	ug/kg	
79-34-5	1,1,2,2-Tetrachloroethane	ND	4.2	1.0	ug/kg	
79-00-5	1,1,2-Trichloroethane	ND	4.2	0.93	ug/kg	
87-61-6	1,2,3-Trichlorobenzene	ND	4.2	0.85	ug/kg	
96-18-4	1,2,3-Trichloropropane	ND	4.2	1.4	ug/kg	
120-82-1	1,2,4-Trichlorobenzene	ND	4.2	1.0	ug/kg	

ND = Not detected MDL - Method Detection Limit
RL = Reporting Limit
E = Indicates value exceeds calibration range

J = Indicates an estimated value
B = Indicates analyte found in associated method blank
N = Indicates presumptive evidence of a compound

Report of Analysis

Client Sample ID:	SS39-DPT-11C		
Lab Sample ID:	F78009-21	**Date Sampled:**	11/11/10
Matrix:	SO - Soil	**Date Received:**	11/12/10
Method:	SW846 8260B	**Percent Solids:**	88.8
Project:	Holloman AFB; Alamogordo, NM		

VOA Special List

CAS No.	Compound	Result	RL	MDL	Units	Q
95-63-6	1,2,4-Trimethylbenzene	ND	4.2	0.93	ug/kg	
108-67-8	1,3,5-Trimethylbenzene	ND	4.2	1.1	ug/kg	
127-18-4	Tetrachloroethylene	ND	4.2	0.85	ug/kg	
108-88-3	Toluene	ND	4.2	1.0	ug/kg	
79-01-6	Trichloroethylene	ND	4.2	1.0	ug/kg	
75-69-4	Trichlorofluoromethane	ND	4.2	1.7	ug/kg	
110-57-6	Trans-1,4-Dichloro-2-Butene	ND	21	4.2	ug/kg	
75-01-4	Vinyl chloride	ND	4.2	1.3	ug/kg	
108-05-4	Vinyl Acetate	ND	21	12	ug/kg	
	m,p-Xylene	ND	8.5	1.9	ug/kg	
95-47-6	o-Xylene	ND	4.2	0.85	ug/kg	

CAS No.	Surrogate Recoveries	Run# 1	Run# 2	Limits
1868-53-7	Dibromofluoromethane	120%		80-121%
2037-26-5	Toluene-D8	76%		71-130%
460-00-4	4-Bromofluorobenzene	108%		59-148%
17060-07-0	1,2-Dichloroethane-D4	118%		77-123%

(a) ICV and BS outside of control limits. Suspected laboratory contaminant.

ND = Not detected MDL - Method Detection Limit
RL = Reporting Limit
E = Indicates value exceeds calibration range

J = Indicates an estimated value
B = Indicates analyte found in associated method blank
N = Indicates presumptive evidence of a compound

Report of Analysis

Client Sample ID:	SS39-DPT-11C		
Lab Sample ID:	F78009-21	**Date Sampled:**	11/11/10
Matrix:	SO - Soil	**Date Received:**	11/12/10
Method:	SW846 8015C	**Percent Solids:**	88.8
Project:	Holloman AFB; Alamogordo, NM		

	File ID	DF	Analyzed	By	Prep Date	Prep Batch	Analytical Batch
Run #1	QR056893.D	1	11/20/10	AH	n/a	n/a	GQR2474
Run #2							

	Initial Weight	Final Volume	Methanol Aliquot
Run #1	7.26 g	5.0 ml	100 ul
Run #2			

CAS No.	Compound	Result	RL	MDL	Units	Q
	TPH-GRO (C6-C10)	ND	4.5	2.3	mg/kg	

CAS No.	Surrogate Recoveries	Run# 1	Run# 2	Limits
460-00-4	4-Bromofluorobenzene	78%		56-136%
98-08-8	aaa-Trifluorotoluene	71%		61-121%

ND = Not detected MDL - Method Detection Limit
RL = Reporting Limit
E = Indicates value exceeds calibration range

J = Indicates an estimated value
B = Indicates analyte found in associated method blank
N = Indicates presumptive evidence of a compound

Report of Analysis

Client Sample ID:	SS39-DPT-12A		
Lab Sample ID:	F78009-22	**Date Sampled:**	11/11/10
Matrix:	SO - Soil	**Date Received:**	11/12/10
Method:	SW846 8260B	**Percent Solids:**	92.4
Project:	Holloman AFB; Alamogordo, NM		

	File ID	DF	Analyzed	By	Prep Date	Prep Batch	Analytical Batch
Run #1	H066227.D	1	11/20/10	MM	n/a	n/a	VH2465
Run #2							

	Initial Weight
Run #1	5.66 g
Run #2	

VOA Special List

CAS No.	Compound	Result	RL	MDL	Units	Q
67-64-1	Acetone	ND	48	19	ug/kg	
75-05-8	Acetonitrile	ND	48	17	ug/kg	
107-02-8	Acrolein	ND	24	11	ug/kg	
107-13-1	Acrylonitrile	ND	24	11	ug/kg	
107-05-1	Allyl chloride	ND	24	4.8	ug/kg	
71-43-2	Benzene	ND	4.8	1.4	ug/kg	
100-44-7	Benzyl Chloride	ND	4.8	1.4	ug/kg	
108-86-1	Bromobenzene	ND	4.8	1.3	ug/kg	
74-97-5	Bromochloromethane	ND	4.8	1.3	ug/kg	
75-27-4	Bromodichloromethane	ND	4.8	1.1	ug/kg	
75-25-2	Bromoform	ND	4.8	1.4	ug/kg	
104-51-8	n-Butylbenzene	ND	4.8	1.2	ug/kg	
135-98-8	sec-Butylbenzene	ND	4.8	1.5	ug/kg	
98-06-6	tert-Butylbenzene	ND	4.8	1.1	ug/kg	
108-90-7	Chlorobenzene	ND	4.8	0.96	ug/kg	
75-00-3	Chloroethane	ND	4.8	1.9	ug/kg	
67-66-3	Chloroform	ND	4.8	1.1	ug/kg	
544-10-5	1-Chlorohexane	ND	4.8	1.3	ug/kg	
95-49-8	o-Chlorotoluene	ND	4.8	1.1	ug/kg	
106-43-4	p-Chlorotoluene	ND	4.8	1.1	ug/kg	
110-75-8	2-Chloroethyl vinyl ether	ND	24	9.6	ug/kg	
75-15-0	Carbon disulfide	ND	4.8	1.9	ug/kg	
56-23-5	Carbon tetrachloride	ND	4.8	1.7	ug/kg	
75-34-3	1,1-Dichloroethane	ND	4.8	1.1	ug/kg	
75-35-4	1,1-Dichloroethylene	ND	4.8	1.3	ug/kg	
563-58-6	1,1-Dichloropropene	ND	4.8	1.2	ug/kg	
96-12-8	1,2-Dibromo-3-chloropropane	ND	4.8	2.2	ug/kg	
106-93-4	1,2-Dibromoethane	ND	4.8	0.96	ug/kg	
107-06-2	1,2-Dichloroethane	ND	4.8	0.96	ug/kg	
78-87-5	1,2-Dichloropropane	ND	4.8	1.1	ug/kg	
142-28-9	1,3-Dichloropropane	ND	4.8	0.96	ug/kg	
594-20-7	2,2-Dichloropropane	ND	4.8	1.3	ug/kg	

ND = Not detected MDL - Method Detection Limit
RL = Reporting Limit
E = Indicates value exceeds calibration range

J = Indicates an estimated value
B = Indicates analyte found in associated method blank
N = Indicates presumptive evidence of a compound

Report of Analysis

Client Sample ID:	SS39-DPT-12A		
Lab Sample ID:	F78009-22	**Date Sampled:**	11/11/10
Matrix:	SO - Soil	**Date Received:**	11/12/10
Method:	SW846 8260B	**Percent Solids:**	92.4
Project:	Holloman AFB; Alamogordo, NM		

VOA Special List

CAS No.	Compound	Result	RL	MDL	Units	Q
124-48-1	Dibromochloromethane	ND	4.8	0.96	ug/kg	
75-71-8	Dichlorodifluoromethane	ND	4.8	1.4	ug/kg	
156-59-2	cis-1,2-Dichloroethylene	ND	4.8	1.4	ug/kg	
10061-01-5	cis-1,3-Dichloropropene	ND	4.8	0.96	ug/kg	
1476-11-5	cis-1,4-Dichloro-2-Butene	ND	24	4.8	ug/kg	
541-73-1	m-Dichlorobenzene	ND	4.8	1.1	ug/kg	
95-50-1	o-Dichlorobenzene	ND	4.8	1.1	ug/kg	
106-46-7	p-Dichlorobenzene	ND	4.8	1.1	ug/kg	
156-60-5	trans-1,2-Dichloroethylene	ND	4.8	1.4	ug/kg	
10061-02-6	trans-1,3-Dichloropropene	ND	4.8	1.1	ug/kg	
100-41-4	Ethylbenzene	ND	4.8	0.96	ug/kg	
97-63-2	Ethyl methacrylate	ND	24	4.8	ug/kg	
76-13-1	Freon 113	ND	4.8	1.6	ug/kg	
591-78-6	2-Hexanone	ND	24	5.2	ug/kg	
87-68-3	Hexachlorobutadiene	ND	4.8	1.9	ug/kg	
110-54-3	Hexane	ND	4.8	1.8	ug/kg	
98-82-8	Isopropylbenzene	ND	4.8	1.1	ug/kg	
99-87-6	p-Isopropyltoluene	ND	4.8	1.1	ug/kg	
108-10-1	4-Methyl-2-pentanone	ND	24	5.3	ug/kg	
126-98-7	Methacrylonitrile	ND	24	8.8	ug/kg	
74-83-9	Methyl bromide	ND	4.8	1.9	ug/kg	
74-87-3	Methyl chloride	ND	4.8	1.9	ug/kg	
74-88-4	Methyl iodide	ND	9.6	1.1	ug/kg	
80-62-6	Methyl methacrylate	ND	4.8	1.7	ug/kg	
74-95-3	Methylene bromide	ND	4.8	1.4	ug/kg	
75-09-2	Methylene chloride [a]	11.9	9.6	4.4	ug/kg	B
78-93-3	Methyl ethyl ketone	ND	24	5.8	ug/kg	
1634-04-4	Methyl Tert Butyl Ether	ND	4.8	1.9	ug/kg	
91-20-3	Naphthalene	ND	4.8	1.9	ug/kg	
76-01-7	Pentachloroethane	ND	24	4.8	ug/kg	
107-12-0	Propionitrile	ND	48	15	ug/kg	
103-65-1	n-Propylbenzene	ND	4.8	1.3	ug/kg	
100-42-5	Styrene	ND	4.8	2.5	ug/kg	
630-20-6	1,1,1,2-Tetrachloroethane	ND	4.8	0.96	ug/kg	
71-55-6	1,1,1-Trichloroethane	ND	4.8	1.1	ug/kg	
79-34-5	1,1,2,2-Tetrachloroethane	ND	4.8	1.1	ug/kg	
79-00-5	1,1,2-Trichloroethane	ND	4.8	1.1	ug/kg	
87-61-6	1,2,3-Trichlorobenzene	ND	4.8	0.96	ug/kg	
96-18-4	1,2,3-Trichloropropane	ND	4.8	1.6	ug/kg	
120-82-1	1,2,4-Trichlorobenzene	ND	4.8	1.1	ug/kg	

ND = Not detected MDL - Method Detection Limit
RL = Reporting Limit
E = Indicates value exceeds calibration range

J = Indicates an estimated value
B = Indicates analyte found in associated method blank
N = Indicates presumptive evidence of a compound

Report of Analysis

Client Sample ID:	SS39-DPT-12A		
Lab Sample ID:	F78009-22	**Date Sampled:**	11/11/10
Matrix:	SO - Soil	**Date Received:**	11/12/10
Method:	SW846 8260B	**Percent Solids:**	92.4
Project:	Holloman AFB; Alamogordo, NM		

VOA Special List

CAS No.	Compound	Result	RL	MDL	Units	Q
95-63-6	1,2,4-Trimethylbenzene	ND	4.8	1.1	ug/kg	
108-67-8	1,3,5-Trimethylbenzene	ND	4.8	1.2	ug/kg	
127-18-4	Tetrachloroethylene	ND	4.8	0.96	ug/kg	
108-88-3	Toluene	ND	4.8	1.1	ug/kg	
79-01-6	Trichloroethylene	ND	4.8	1.1	ug/kg	
75-69-4	Trichlorofluoromethane	ND	4.8	1.9	ug/kg	
110-57-6	Trans-1,4-Dichloro-2-Butene	ND	24	4.8	ug/kg	
75-01-4	Vinyl chloride	ND	4.8	1.4	ug/kg	
108-05-4	Vinyl Acetate	ND	24	13	ug/kg	
	m,p-Xylene	ND	9.6	2.1	ug/kg	
95-47-6	o-Xylene	ND	4.8	0.96	ug/kg	

CAS No.	Surrogate Recoveries	Run# 1	Run# 2	Limits
1868-53-7	Dibromofluoromethane	118%		80-121%
2037-26-5	Toluene-D8	75%		71-130%
460-00-4	4-Bromofluorobenzene	103%		59-148%
17060-07-0	1,2-Dichloroethane-D4	119%		77-123%

(a) ICV outside of control limits. Suspected laboratory contaminant.

ND = Not detected MDL - Method Detection Limit
RL = Reporting Limit
E = Indicates value exceeds calibration range

J = Indicates an estimated value
B = Indicates analyte found in associated method blank
N = Indicates presumptive evidence of a compound

Report of Analysis

Client Sample ID:	SS39-DPT-12A		
Lab Sample ID:	F78009-22	**Date Sampled:**	11/11/10
Matrix:	SO - Soil	**Date Received:**	11/12/10
Method:	SW846 8015C	**Percent Solids:**	92.4
Project:	Holloman AFB; Alamogordo, NM		

	File ID	DF	Analyzed	By	Prep Date	Prep Batch	Analytical Batch
Run #1	QR056894.D	1	11/20/10	AH	n/a	n/a	GQR2474
Run #2							

	Initial Weight	Final Volume	Methanol Aliquot
Run #1	6.51 g	5.0 ml	100 ul
Run #2			

CAS No.	Compound	Result	RL	MDL	Units	Q
	TPH-GRO (C6-C10)	ND	4.6	2.3	mg/kg	

CAS No.	Surrogate Recoveries	Run# 1	Run# 2	Limits
460-00-4	4-Bromofluorobenzene	84%		56-136%
98-08-8	aaa-Trifluorotoluene	77%		61-121%

ND = Not detected MDL - Method Detection Limit
RL = Reporting Limit
E = Indicates value exceeds calibration range

J = Indicates an estimated value
B = Indicates analyte found in associated method blank
N = Indicates presumptive evidence of a compound

Report of Analysis

Client Sample ID:	SS39-DPT-12B		
Lab Sample ID:	F78009-23	**Date Sampled:**	11/11/10
Matrix:	SO - Soil	**Date Received:**	11/12/10
Method:	SW846 8260B	**Percent Solids:**	93.7
Project:	Holloman AFB; Alamogordo, NM		

	File ID	DF	Analyzed	By	Prep Date	Prep Batch	Analytical Batch
Run #1	H066228.D	1	11/20/10	MM	n/a	n/a	VH2465
Run #2							

	Initial Weight
Run #1	5.05 g
Run #2	

VOA Special List

CAS No.	Compound	Result	RL	MDL	Units	Q
67-64-1	Acetone	ND	53	21	ug/kg	
75-05-8	Acetonitrile	ND	53	19	ug/kg	
107-02-8	Acrolein	ND	26	12	ug/kg	
107-13-1	Acrylonitrile	ND	26	12	ug/kg	
107-05-1	Allyl chloride	ND	26	5.3	ug/kg	
71-43-2	Benzene	ND	5.3	1.6	ug/kg	
100-44-7	Benzyl Chloride	ND	5.3	1.6	ug/kg	
108-86-1	Bromobenzene	ND	5.3	1.5	ug/kg	
74-97-5	Bromochloromethane	ND	5.3	1.5	ug/kg	
75-27-4	Bromodichloromethane	ND	5.3	1.2	ug/kg	
75-25-2	Bromoform	ND	5.3	1.6	ug/kg	
104-51-8	n-Butylbenzene	ND	5.3	1.4	ug/kg	
135-98-8	sec-Butylbenzene	ND	5.3	1.7	ug/kg	
98-06-6	tert-Butylbenzene	ND	5.3	1.3	ug/kg	
108-90-7	Chlorobenzene	ND	5.3	1.1	ug/kg	
75-00-3	Chloroethane	ND	5.3	2.1	ug/kg	
67-66-3	Chloroform	ND	5.3	1.3	ug/kg	
544-10-5	1-Chlorohexane	ND	5.3	1.5	ug/kg	
95-49-8	o-Chlorotoluene	ND	5.3	1.3	ug/kg	
106-43-4	p-Chlorotoluene	ND	5.3	1.3	ug/kg	
110-75-8	2-Chloroethyl vinyl ether	ND	26	11	ug/kg	
75-15-0	Carbon disulfide	ND	5.3	2.1	ug/kg	
56-23-5	Carbon tetrachloride	ND	5.3	1.9	ug/kg	
75-34-3	1,1-Dichloroethane	ND	5.3	1.2	ug/kg	
75-35-4	1,1-Dichloroethylene	ND	5.3	1.5	ug/kg	
563-58-6	1,1-Dichloropropene	ND	5.3	1.4	ug/kg	
96-12-8	1,2-Dibromo-3-chloropropane	ND	5.3	2.4	ug/kg	
106-93-4	1,2-Dibromoethane	ND	5.3	1.1	ug/kg	
107-06-2	1,2-Dichloroethane	ND	5.3	1.1	ug/kg	
78-87-5	1,2-Dichloropropane	ND	5.3	1.3	ug/kg	
142-28-9	1,3-Dichloropropane	ND	5.3	1.1	ug/kg	
594-20-7	2,2-Dichloropropane	ND	5.3	1.5	ug/kg	

ND = Not detected MDL - Method Detection Limit
RL = Reporting Limit
E = Indicates value exceeds calibration range

J = Indicates an estimated value
B = Indicates analyte found in associated method blank
N = Indicates presumptive evidence of a compound

Report of Analysis

Client Sample ID:	SS39-DPT-12B		
Lab Sample ID:	F78009-23	**Date Sampled:**	11/11/10
Matrix:	SO - Soil	**Date Received:**	11/12/10
Method:	SW846 8260B	**Percent Solids:**	93.7
Project:	Holloman AFB; Alamogordo, NM		

VOA Special List

CAS No.	Compound	Result	RL	MDL	Units	Q
124-48-1	Dibromochloromethane	ND	5.3	1.1	ug/kg	
75-71-8	Dichlorodifluoromethane	ND	5.3	1.6	ug/kg	
156-59-2	cis-1,2-Dichloroethylene	ND	5.3	1.6	ug/kg	
10061-01-5	cis-1,3-Dichloropropene	ND	5.3	1.1	ug/kg	
1476-11-5	cis-1,4-Dichloro-2-Butene	ND	26	5.3	ug/kg	
541-73-1	m-Dichlorobenzene	ND	5.3	1.3	ug/kg	
95-50-1	o-Dichlorobenzene	ND	5.3	1.2	ug/kg	
106-46-7	p-Dichlorobenzene	ND	5.3	1.2	ug/kg	
156-60-5	trans-1,2-Dichloroethylene	ND	5.3	1.6	ug/kg	
10061-02-6	trans-1,3-Dichloropropene	ND	5.3	1.2	ug/kg	
100-41-4	Ethylbenzene	ND	5.3	1.1	ug/kg	
97-63-2	Ethyl methacrylate	ND	26	5.3	ug/kg	
76-13-1	Freon 113	ND	5.3	1.8	ug/kg	
591-78-6	2-Hexanone	ND	26	5.7	ug/kg	
87-68-3	Hexachlorobutadiene	ND	5.3	2.1	ug/kg	
110-54-3	Hexane	ND	5.3	2.0	ug/kg	
98-82-8	Isopropylbenzene	ND	5.3	1.2	ug/kg	
99-87-6	p-Isopropyltoluene	ND	5.3	1.3	ug/kg	
108-10-1	4-Methyl-2-pentanone	ND	26	5.8	ug/kg	
126-98-7	Methacrylonitrile	ND	26	9.7	ug/kg	
74-83-9	Methyl bromide	ND	5.3	2.1	ug/kg	
74-87-3	Methyl chloride	ND	5.3	2.1	ug/kg	
74-88-4	Methyl iodide	ND	11	1.2	ug/kg	
80-62-6	Methyl methacrylate	ND	5.3	1.9	ug/kg	
74-95-3	Methylene bromide	ND	5.3	1.6	ug/kg	
75-09-2	Methylene chloride [a]	15.4	11	4.9	ug/kg	B
78-93-3	Methyl ethyl ketone	ND	26	6.4	ug/kg	
1634-04-4	Methyl Tert Butyl Ether	ND	5.3	2.1	ug/kg	
91-20-3	Naphthalene	ND	5.3	2.1	ug/kg	
76-01-7	Pentachloroethane	ND	26	5.3	ug/kg	
107-12-0	Propionitrile	ND	53	17	ug/kg	
103-65-1	n-Propylbenzene	ND	5.3	1.5	ug/kg	
100-42-5	Styrene	ND	5.3	2.7	ug/kg	
630-20-6	1,1,1,2-Tetrachloroethane	ND	5.3	1.1	ug/kg	
71-55-6	1,1,1-Trichloroethane	ND	5.3	1.2	ug/kg	
79-34-5	1,1,2,2-Tetrachloroethane	ND	5.3	1.3	ug/kg	
79-00-5	1,1,2-Trichloroethane	ND	5.3	1.2	ug/kg	
87-61-6	1,2,3-Trichlorobenzene	ND	5.3	1.1	ug/kg	
96-18-4	1,2,3-Trichloropropane	ND	5.3	1.8	ug/kg	
120-82-1	1,2,4-Trichlorobenzene	ND	5.3	1.3	ug/kg	

ND = Not detected MDL - Method Detection Limit
RL = Reporting Limit
E = Indicates value exceeds calibration range

J = Indicates an estimated value
B = Indicates analyte found in associated method blank
N = Indicates presumptive evidence of a compound

Report of Analysis

Client Sample ID:	SS39-DPT-12B		
Lab Sample ID:	F78009-23	**Date Sampled:**	11/11/10
Matrix:	SO - Soil	**Date Received:**	11/12/10
Method:	SW846 8260B	**Percent Solids:**	93.7
Project:	Holloman AFB; Alamogordo, NM		

VOA Special List

CAS No.	Compound	Result	RL	MDL	Units	Q
95-63-6	1,2,4-Trimethylbenzene	ND	5.3	1.2	ug/kg	
108-67-8	1,3,5-Trimethylbenzene	ND	5.3	1.4	ug/kg	
127-18-4	Tetrachloroethylene	ND	5.3	1.1	ug/kg	
108-88-3	Toluene	ND	5.3	1.3	ug/kg	
79-01-6	Trichloroethylene	ND	5.3	1.3	ug/kg	
75-69-4	Trichlorofluoromethane	ND	5.3	2.1	ug/kg	
110-57-6	Trans-1,4-Dichloro-2-Butene	ND	26	5.3	ug/kg	
75-01-4	Vinyl chloride	ND	5.3	1.6	ug/kg	
108-05-4	Vinyl Acetate	ND	26	15	ug/kg	
	m,p-Xylene	ND	11	2.3	ug/kg	
95-47-6	o-Xylene	ND	5.3	1.1	ug/kg	

CAS No.	Surrogate Recoveries	Run# 1	Run# 2	Limits
1868-53-7	Dibromofluoromethane	117%		80-121%
2037-26-5	Toluene-D8	77%		71-130%
460-00-4	4-Bromofluorobenzene	102%		59-148%
17060-07-0	1,2-Dichloroethane-D4	117%		77-123%

(a) ICV outside of control limits. Suspected laboratory contaminant.

ND = Not detected MDL - Method Detection Limit
RL = Reporting Limit
E = Indicates value exceeds calibration range

J = Indicates an estimated value
B = Indicates analyte found in associated method blank
N = Indicates presumptive evidence of a compound

Report of Analysis

Client Sample ID:	SS39-DPT-12B		
Lab Sample ID:	F78009-23	**Date Sampled:**	11/11/10
Matrix:	SO - Soil	**Date Received:**	11/12/10
Method:	SW846 8015C	**Percent Solids:**	93.7
Project:	Holloman AFB; Alamogordo, NM		

	File ID	DF	Analyzed	By	Prep Date	Prep Batch	Analytical Batch
Run #1	QR056895.D	1	11/20/10	AH	n/a	n/a	GQR2474
Run #2							

	Initial Weight	Final Volume	Methanol Aliquot
Run #1	5.66 g	5.0 ml	100 ul
Run #2			

CAS No.	Compound	Result	RL	MDL	Units	Q
	TPH-GRO (C6-C10)	ND	5.1	2.5	mg/kg	

CAS No.	Surrogate Recoveries	Run# 1	Run# 2	Limits
460-00-4	4-Bromofluorobenzene	81%		56-136%
98-08-8	aaa-Trifluorotoluene	71%		61-121%

ND = Not detected MDL - Method Detection Limit
RL = Reporting Limit
E = Indicates value exceeds calibration range

J = Indicates an estimated value
B = Indicates analyte found in associated method blank
N = Indicates presumptive evidence of a compound

Report of Analysis

Client Sample ID:	SS39-DPT-12C		
Lab Sample ID:	F78009-24	**Date Sampled:**	11/11/10
Matrix:	SO - Soil	**Date Received:**	11/12/10
Method:	SW846 8260B	**Percent Solids:**	89.6
Project:	Holloman AFB; Alamogordo, NM		

	File ID	DF	Analyzed	By	Prep Date	Prep Batch	Analytical Batch
Run #1	H066229.D	1	11/20/10	MM	n/a	n/a	VH2465
Run #2 [a]	H066174.D	1	11/19/10	MM	n/a	n/a	VH2464

	Initial Weight
Run #1	6.92 g
Run #2	6.32 g

VOA Special List

CAS No.	Compound	Result	RL	MDL	Units	Q
67-64-1	Acetone	ND	40	16	ug/kg	
75-05-8	Acetonitrile	ND	40	15	ug/kg	
107-02-8	Acrolein	ND	20	8.9	ug/kg	
107-13-1	Acrylonitrile	ND	20	9.2	ug/kg	
107-05-1	Allyl chloride	ND	20	4.0	ug/kg	
71-43-2	Benzene	ND	4.0	1.2	ug/kg	
100-44-7	Benzyl Chloride	ND	4.0	1.2	ug/kg	
108-86-1	Bromobenzene	ND	4.0	1.1	ug/kg	
74-97-5	Bromochloromethane	ND	4.0	1.1	ug/kg	
75-27-4	Bromodichloromethane	ND	4.0	0.89	ug/kg	
75-25-2	Bromoform	ND	4.0	1.2	ug/kg	
104-51-8	n-Butylbenzene	ND	4.0	1.0	ug/kg	
135-98-8	sec-Butylbenzene	ND	4.0	1.3	ug/kg	
98-06-6	tert-Butylbenzene	ND	4.0	0.97	ug/kg	
108-90-7	Chlorobenzene	ND	4.0	0.81	ug/kg	
75-00-3	Chloroethane	ND	4.0	1.6	ug/kg	
67-66-3	Chloroform	ND	4.0	0.97	ug/kg	
544-10-5	1-Chlorohexane	ND	4.0	1.1	ug/kg	
95-49-8	o-Chlorotoluene	ND	4.0	0.97	ug/kg	
106-43-4	p-Chlorotoluene	ND	4.0	0.97	ug/kg	
110-75-8	2-Chloroethyl vinyl ether	ND	20	8.1	ug/kg	
75-15-0	Carbon disulfide	ND	4.0	1.6	ug/kg	
56-23-5	Carbon tetrachloride	ND	4.0	1.5	ug/kg	
75-34-3	1,1-Dichloroethane	ND	4.0	0.89	ug/kg	
75-35-4	1,1-Dichloroethylene	ND	4.0	1.1	ug/kg	
563-58-6	1,1-Dichloropropene	ND	4.0	1.0	ug/kg	
96-12-8	1,2-Dibromo-3-chloropropane	ND	4.0	1.9	ug/kg	
106-93-4	1,2-Dibromoethane	ND	4.0	0.81	ug/kg	
107-06-2	1,2-Dichloroethane	ND	4.0	0.81	ug/kg	
78-87-5	1,2-Dichloropropane	ND	4.0	0.97	ug/kg	
142-28-9	1,3-Dichloropropane	ND	4.0	0.81	ug/kg	
594-20-7	2,2-Dichloropropane	ND	4.0	1.1	ug/kg	

ND = Not detected MDL - Method Detection Limit
RL = Reporting Limit
E = Indicates value exceeds calibration range

J = Indicates an estimated value
B = Indicates analyte found in associated method blank
N = Indicates presumptive evidence of a compound

Report of Analysis

Client Sample ID:	SS39-DPT-12C		
Lab Sample ID:	F78009-24	**Date Sampled:**	11/11/10
Matrix:	SO - Soil	**Date Received:**	11/12/10
Method:	SW846 8260B	**Percent Solids:**	89.6
Project:	Holloman AFB; Alamogordo, NM		

VOA Special List

CAS No.	Compound	Result	RL	MDL	Units	Q
124-48-1	Dibromochloromethane	ND	4.0	0.81	ug/kg	
75-71-8	Dichlorodifluoromethane	ND	4.0	1.2	ug/kg	
156-59-2	cis-1,2-Dichloroethylene	ND	4.0	1.2	ug/kg	
10061-01-5	cis-1,3-Dichloropropene	ND	4.0	0.81	ug/kg	
1476-11-5	cis-1,4-Dichloro-2-Butene	ND	20	4.0	ug/kg	
541-73-1	m-Dichlorobenzene	ND	4.0	0.97	ug/kg	
95-50-1	o-Dichlorobenzene	ND	4.0	0.89	ug/kg	
106-46-7	p-Dichlorobenzene	ND	4.0	0.89	ug/kg	
156-60-5	trans-1,2-Dichloroethylene	ND	4.0	1.2	ug/kg	
10061-02-6	trans-1,3-Dichloropropene	ND	4.0	0.89	ug/kg	
100-41-4	Ethylbenzene	ND	4.0	0.81	ug/kg	
97-63-2	Ethyl methacrylate	ND	20	4.0	ug/kg	
76-13-1	Freon 113	ND	4.0	1.4	ug/kg	
591-78-6	2-Hexanone	ND	20	4.4	ug/kg	
87-68-3	Hexachlorobutadiene	ND	4.0	1.6	ug/kg	
110-54-3	Hexane	ND	4.0	1.5	ug/kg	
98-82-8	Isopropylbenzene	ND	4.0	0.89	ug/kg	
99-87-6	p-Isopropyltoluene	ND	4.0	0.97	ug/kg	
108-10-1	4-Methyl-2-pentanone	ND	20	4.4	ug/kg	
126-98-7	Methacrylonitrile	ND	20	7.4	ug/kg	
74-83-9	Methyl bromide	ND	4.0	1.6	ug/kg	
74-87-3	Methyl chloride	ND	4.0	1.6	ug/kg	
74-88-4	Methyl iodide	ND	8.1	0.89	ug/kg	
80-62-6	Methyl methacrylate	ND	4.0	1.5	ug/kg	
74-95-3	Methylene bromide	ND	4.0	1.2	ug/kg	
75-09-2	Methylene chloride [b]	16.8	8.1	3.7	ug/kg	B
78-93-3	Methyl ethyl ketone	ND	20	4.9	ug/kg	
1634-04-4	Methyl Tert Butyl Ether	ND	4.0	1.6	ug/kg	
91-20-3	Naphthalene	ND	4.0	1.6	ug/kg	
76-01-7	Pentachloroethane	ND	20	4.0	ug/kg	
107-12-0	Propionitrile	ND	40	13	ug/kg	
103-65-1	n-Propylbenzene	ND	4.0	1.1	ug/kg	
100-42-5	Styrene	ND	4.0	2.1	ug/kg	
630-20-6	1,1,1,2-Tetrachloroethane	ND	4.0	0.81	ug/kg	
71-55-6	1,1,1-Trichloroethane	ND	4.0	0.89	ug/kg	
79-34-5	1,1,2,2-Tetrachloroethane	ND	4.0	0.97	ug/kg	
79-00-5	1,1,2-Trichloroethane	ND	4.0	0.89	ug/kg	
87-61-6	1,2,3-Trichlorobenzene	ND	4.0	0.81	ug/kg	
96-18-4	1,2,3-Trichloropropane	ND	4.0	1.4	ug/kg	
120-82-1	1,2,4-Trichlorobenzene	ND	4.0	0.97	ug/kg	

ND = Not detected MDL - Method Detection Limit
RL = Reporting Limit
E = Indicates value exceeds calibration range

J = Indicates an estimated value
B = Indicates analyte found in associated method blank
N = Indicates presumptive evidence of a compound

Report of Analysis

Client Sample ID:	SS39-DPT-12C		
Lab Sample ID:	F78009-24	**Date Sampled:**	11/11/10
Matrix:	SO - Soil	**Date Received:**	11/12/10
Method:	SW846 8260B	**Percent Solids:**	89.6
Project:	Holloman AFB; Alamogordo, NM		

VOA Special List

CAS No.	Compound	Result	RL	MDL	Units	Q
95-63-6	1,2,4-Trimethylbenzene	ND	4.0	0.89	ug/kg	
108-67-8	1,3,5-Trimethylbenzene	ND	4.0	1.0	ug/kg	
127-18-4	Tetrachloroethylene	ND	4.0	0.81	ug/kg	
108-88-3	Toluene	ND	4.0	0.97	ug/kg	
79-01-6	Trichloroethylene	ND	4.0	0.97	ug/kg	
75-69-4	Trichlorofluoromethane	ND	4.0	1.6	ug/kg	
110-57-6	Trans-1,4-Dichloro-2-Butene	ND	20	4.0	ug/kg	
75-01-4	Vinyl chloride	ND	4.0	1.2	ug/kg	
108-05-4	Vinyl Acetate	ND	20	11	ug/kg	
	m,p-Xylene	ND	8.1	1.8	ug/kg	
95-47-6	o-Xylene	ND	4.0	0.81	ug/kg	

CAS No.	Surrogate Recoveries	Run# 1	Run# 2	Limits
1868-53-7	Dibromofluoromethane	126% c	101%	80-121%
2037-26-5	Toluene-D8	77%	78%	71-130%
460-00-4	4-Bromofluorobenzene	95%	103%	59-148%
17060-07-0	1,2-Dichloroethane-D4	130% c	101%	77-123%

(a) Confirmation run for surrogate recoveries.
(b) ICV outside of control limits. Suspected laboratory contaminant.
(c) Outside control limits.

ND = Not detected MDL - Method Detection Limit
RL = Reporting Limit
E = Indicates value exceeds calibration range

J = Indicates an estimated value
B = Indicates analyte found in associated method blank
N = Indicates presumptive evidence of a compound

Report of Analysis

Client Sample ID:	SS39-DPT-12C		
Lab Sample ID:	F78009-24	**Date Sampled:**	11/11/10
Matrix:	SO - Soil	**Date Received:**	11/12/10
Method:	SW846 8015C	**Percent Solids:**	89.6
Project:	Holloman AFB; Alamogordo, NM		

	File ID	DF	Analyzed	By	Prep Date	Prep Batch	Analytical Batch
Run #1	QR056896.D	1	11/20/10	AH	n/a	n/a	GQR2474
Run #2							

	Initial Weight	Final Volume	Methanol Aliquot
Run #1	7.11 g	5.0 ml	100 ul
Run #2			

CAS No.	Compound	Result	RL	MDL	Units	Q
	TPH-GRO (C6-C10)	ND	4.5	2.3	mg/kg	

CAS No.	Surrogate Recoveries	Run# 1	Run# 2	Limits
460-00-4	4-Bromofluorobenzene	81%		56-136%
98-08-8	aaa-Trifluorotoluene	75%		61-121%

ND = Not detected MDL - Method Detection Limit
RL = Reporting Limit
E = Indicates value exceeds calibration range

J = Indicates an estimated value
B = Indicates analyte found in associated method blank
N = Indicates presumptive evidence of a compound

Report of Analysis

Client Sample ID:	SS39-DPT-13A		
Lab Sample ID:	F78009-25	**Date Sampled:**	11/11/10
Matrix:	SO - Soil	**Date Received:**	11/12/10
Method:	SW846 8260B	**Percent Solids:**	94.1
Project:	Holloman AFB; Alamogordo, NM		

	File ID	DF	Analyzed	By	Prep Date	Prep Batch	Analytical Batch
Run #1	H066188.D	1	11/19/10	MM	n/a	n/a	VH2464
Run #2							

	Initial Weight
Run #1	6.23 g
Run #2	

VOA Special List

CAS No.	Compound	Result	RL	MDL	Units	Q
67-64-1	Acetone	ND	43	17	ug/kg	
75-05-8	Acetonitrile	ND	43	15	ug/kg	
107-02-8	Acrolein	ND	21	9.4	ug/kg	
107-13-1	Acrylonitrile	ND	21	9.7	ug/kg	
107-05-1	Allyl chloride	ND	21	4.3	ug/kg	
71-43-2	Benzene	ND	4.3	1.3	ug/kg	
100-44-7	Benzyl Chloride	ND	4.3	1.3	ug/kg	
108-86-1	Bromobenzene	ND	4.3	1.2	ug/kg	
74-97-5	Bromochloromethane	ND	4.3	1.2	ug/kg	
75-27-4	Bromodichloromethane	ND	4.3	0.94	ug/kg	
75-25-2	Bromoform	ND	4.3	1.3	ug/kg	
104-51-8	n-Butylbenzene	ND	4.3	1.1	ug/kg	
135-98-8	sec-Butylbenzene	ND	4.3	1.4	ug/kg	
98-06-6	tert-Butylbenzene	ND	4.3	1.0	ug/kg	
108-90-7	Chlorobenzene	ND	4.3	0.85	ug/kg	
75-00-3	Chloroethane	ND	4.3	1.7	ug/kg	
67-66-3	Chloroform	ND	4.3	1.0	ug/kg	
544-10-5	1-Chlorohexane	ND	4.3	1.2	ug/kg	
95-49-8	o-Chlorotoluene	ND	4.3	1.0	ug/kg	
106-43-4	p-Chlorotoluene	ND	4.3	1.0	ug/kg	
110-75-8	2-Chloroethyl vinyl ether	ND	21	8.5	ug/kg	
75-15-0	Carbon disulfide	ND	4.3	1.7	ug/kg	
56-23-5	Carbon tetrachloride	ND	4.3	1.5	ug/kg	
75-34-3	1,1-Dichloroethane	ND	4.3	0.94	ug/kg	
75-35-4	1,1-Dichloroethylene	ND	4.3	1.2	ug/kg	
563-58-6	1,1-Dichloropropene	ND	4.3	1.1	ug/kg	
96-12-8	1,2-Dibromo-3-chloropropane	ND	4.3	2.0	ug/kg	
106-93-4	1,2-Dibromoethane	ND	4.3	0.85	ug/kg	
107-06-2	1,2-Dichloroethane	ND	4.3	0.85	ug/kg	
78-87-5	1,2-Dichloropropane	ND	4.3	1.0	ug/kg	
142-28-9	1,3-Dichloropropane	ND	4.3	0.85	ug/kg	
594-20-7	2,2-Dichloropropane	ND	4.3	1.2	ug/kg	

ND = Not detected MDL - Method Detection Limit
RL = Reporting Limit
E = Indicates value exceeds calibration range

J = Indicates an estimated value
B = Indicates analyte found in associated method blank
N = Indicates presumptive evidence of a compound

Report of Analysis

Client Sample ID:	SS39-DPT-13A		
Lab Sample ID:	F78009-25	**Date Sampled:**	11/11/10
Matrix:	SO - Soil	**Date Received:**	11/12/10
Method:	SW846 8260B	**Percent Solids:**	94.1
Project:	Holloman AFB; Alamogordo, NM		

VOA Special List

CAS No.	Compound	Result	RL	MDL	Units	Q
124-48-1	Dibromochloromethane	ND	4.3	0.85	ug/kg	
75-71-8	Dichlorodifluoromethane	ND	4.3	1.3	ug/kg	
156-59-2	cis-1,2-Dichloroethylene	ND	4.3	1.3	ug/kg	
10061-01-5	cis-1,3-Dichloropropene	ND	4.3	0.85	ug/kg	
1476-11-5	cis-1,4-Dichloro-2-Butene	ND	21	4.3	ug/kg	
541-73-1	m-Dichlorobenzene	ND	4.3	1.0	ug/kg	
95-50-1	o-Dichlorobenzene	ND	4.3	0.94	ug/kg	
106-46-7	p-Dichlorobenzene	ND	4.3	0.94	ug/kg	
156-60-5	trans-1,2-Dichloroethylene	ND	4.3	1.3	ug/kg	
10061-02-6	trans-1,3-Dichloropropene	ND	4.3	0.94	ug/kg	
100-41-4	Ethylbenzene	ND	4.3	0.85	ug/kg	
97-63-2	Ethyl methacrylate	ND	21	4.3	ug/kg	
76-13-1	Freon 113	ND	4.3	1.4	ug/kg	
591-78-6	2-Hexanone	ND	21	4.6	ug/kg	
87-68-3	Hexachlorobutadiene	ND	4.3	1.7	ug/kg	
110-54-3	Hexane	ND	4.3	1.6	ug/kg	
98-82-8	Isopropylbenzene	ND	4.3	0.94	ug/kg	
99-87-6	p-Isopropyltoluene	ND	4.3	1.0	ug/kg	
108-10-1	4-Methyl-2-pentanone	ND	21	4.7	ug/kg	
126-98-7	Methacrylonitrile	ND	21	7.8	ug/kg	
74-83-9	Methyl bromide	ND	4.3	1.7	ug/kg	
74-87-3	Methyl chloride	ND	4.3	1.7	ug/kg	
74-88-4	Methyl iodide	ND	8.5	0.94	ug/kg	
80-62-6	Methyl methacrylate	ND	4.3	1.5	ug/kg	
74-95-3	Methylene bromide	ND	4.3	1.3	ug/kg	
75-09-2	Methylene chloride	ND	8.5	3.9	ug/kg	
78-93-3	Methyl ethyl ketone	ND	21	5.2	ug/kg	
1634-04-4	Methyl Tert Butyl Ether	ND	4.3	1.7	ug/kg	
91-20-3	Naphthalene	ND	4.3	1.7	ug/kg	
76-01-7	Pentachloroethane	ND	21	4.3	ug/kg	
107-12-0	Propionitrile	ND	43	14	ug/kg	
103-65-1	n-Propylbenzene	ND	4.3	1.2	ug/kg	
100-42-5	Styrene	ND	4.3	2.2	ug/kg	
630-20-6	1,1,1,2-Tetrachloroethane	ND	4.3	0.85	ug/kg	
71-55-6	1,1,1-Trichloroethane	ND	4.3	0.94	ug/kg	
79-34-5	1,1,2,2-Tetrachloroethane	ND	4.3	1.0	ug/kg	
79-00-5	1,1,2-Trichloroethane	ND	4.3	0.94	ug/kg	
87-61-6	1,2,3-Trichlorobenzene	ND	4.3	0.85	ug/kg	
96-18-4	1,2,3-Trichloropropane	ND	4.3	1.4	ug/kg	
120-82-1	1,2,4-Trichlorobenzene	ND	4.3	1.0	ug/kg	

ND = Not detected MDL - Method Detection Limit
RL = Reporting Limit
E = Indicates value exceeds calibration range

J = Indicates an estimated value
B = Indicates analyte found in associated method blank
N = Indicates presumptive evidence of a compound

Report of Analysis

Client Sample ID:	SS39-DPT-13A		
Lab Sample ID:	F78009-25	**Date Sampled:**	11/11/10
Matrix:	SO - Soil	**Date Received:**	11/12/10
Method:	SW846 8260B	**Percent Solids:**	94.1
Project:	Holloman AFB; Alamogordo, NM		

VOA Special List

CAS No.	Compound	Result	RL	MDL	Units	Q
95-63-6	1,2,4-Trimethylbenzene	ND	4.3	0.94	ug/kg	
108-67-8	1,3,5-Trimethylbenzene	ND	4.3	1.1	ug/kg	
127-18-4	Tetrachloroethylene	ND	4.3	0.85	ug/kg	
108-88-3	Toluene	ND	4.3	1.0	ug/kg	
79-01-6	Trichloroethylene	ND	4.3	1.0	ug/kg	
75-69-4	Trichlorofluoromethane	ND	4.3	1.7	ug/kg	
110-57-6	Trans-1,4-Dichloro-2-Butene	ND	21	4.3	ug/kg	
75-01-4	Vinyl chloride	ND	4.3	1.3	ug/kg	
108-05-4	Vinyl Acetate	ND	21	12	ug/kg	
	m,p-Xylene	ND	8.5	1.9	ug/kg	
95-47-6	o-Xylene	ND	4.3	0.85	ug/kg	

CAS No.	Surrogate Recoveries	Run# 1	Run# 2	Limits
1868-53-7	Dibromofluoromethane	122% [a]		80-121%
2037-26-5	Toluene-D8	76%		71-130%
460-00-4	4-Bromofluorobenzene	104%		59-148%
17060-07-0	1,2-Dichloroethane-D4	122%		77-123%

(a) Outside control limits; however, sample is ND.

ND = Not detected MDL - Method Detection Limit
RL = Reporting Limit
E = Indicates value exceeds calibration range

J = Indicates an estimated value
B = Indicates analyte found in associated method blank
N = Indicates presumptive evidence of a compound

Accutest Laboratories

Report of Analysis

Client Sample ID:	SS39-DPT-13A		
Lab Sample ID:	F78009-25	**Date Sampled:**	11/11/10
Matrix:	SO - Soil	**Date Received:**	11/12/10
Method:	SW846 8015C	**Percent Solids:**	94.1
Project:	Holloman AFB; Alamogordo, NM		

	File ID	DF	Analyzed	By	Prep Date	Prep Batch	Analytical Batch
Run #1	QR056948.D	1	11/22/10	AH	n/a	n/a	GQR2476
Run #2							

	Initial Weight	Final Volume	Methanol Aliquot
Run #1	6.42 g	5.0 ml	100 ul
Run #2			

CAS No.	Compound	Result	RL	MDL	Units	Q
	TPH-GRO (C6-C10)	ND	4.5	2.2	mg/kg	

CAS No.	Surrogate Recoveries	Run# 1	Run# 2	Limits
460-00-4	4-Bromofluorobenzene	79%		56-136%
98-08-8	aaa-Trifluorotoluene	73%		61-121%

ND = Not detected MDL - Method Detection Limit
RL = Reporting Limit
E = Indicates value exceeds calibration range

J = Indicates an estimated value
B = Indicates analyte found in associated method blank
N = Indicates presumptive evidence of a compound

Report of Analysis

Client Sample ID:	SS39-DPT-13B		
Lab Sample ID:	F78009-26	**Date Sampled:**	11/11/10
Matrix:	SO - Soil	**Date Received:**	11/12/10
Method:	SW846 8260B	**Percent Solids:**	97.1
Project:	Holloman AFB; Alamogordo, NM		

	File ID	DF	Analyzed	By	Prep Date	Prep Batch	Analytical Batch
Run #1	H066230.D	1	11/20/10	MM	n/a	n/a	VH2465
Run #2 [a]	H066189.D	1	11/19/10	MM	n/a	n/a	VH2464

	Initial Weight
Run #1	5.84 g
Run #2	5.82 g

VOA Special List

CAS No.	Compound	Result	RL	MDL	Units	Q
67-64-1	Acetone	ND	44	18	ug/kg	
75-05-8	Acetonitrile	ND	44	16	ug/kg	
107-02-8	Acrolein	ND	22	9.7	ug/kg	
107-13-1	Acrylonitrile	ND	22	10	ug/kg	
107-05-1	Allyl chloride	ND	22	4.4	ug/kg	
71-43-2	Benzene	ND	4.4	1.3	ug/kg	
100-44-7	Benzyl Chloride	ND	4.4	1.3	ug/kg	
108-86-1	Bromobenzene	ND	4.4	1.2	ug/kg	
74-97-5	Bromochloromethane	ND	4.4	1.2	ug/kg	
75-27-4	Bromodichloromethane	ND	4.4	0.97	ug/kg	
75-25-2	Bromoform	ND	4.4	1.3	ug/kg	
104-51-8	n-Butylbenzene	ND	4.4	1.1	ug/kg	
135-98-8	sec-Butylbenzene	ND	4.4	1.4	ug/kg	
98-06-6	tert-Butylbenzene	ND	4.4	1.1	ug/kg	
108-90-7	Chlorobenzene	ND	4.4	0.88	ug/kg	
75-00-3	Chloroethane	ND	4.4	1.8	ug/kg	
67-66-3	Chloroform	ND	4.4	1.1	ug/kg	
544-10-5	1-Chlorohexane	ND	4.4	1.2	ug/kg	
95-49-8	o-Chlorotoluene	ND	4.4	1.1	ug/kg	
106-43-4	p-Chlorotoluene	ND	4.4	1.1	ug/kg	
110-75-8	2-Chloroethyl vinyl ether	ND	22	8.8	ug/kg	
75-15-0	Carbon disulfide	ND	4.4	1.8	ug/kg	
56-23-5	Carbon tetrachloride	ND	4.4	1.6	ug/kg	
75-34-3	1,1-Dichloroethane	ND	4.4	0.97	ug/kg	
75-35-4	1,1-Dichloroethylene	ND	4.4	1.2	ug/kg	
563-58-6	1,1-Dichloropropene	ND	4.4	1.1	ug/kg	
96-12-8	1,2-Dibromo-3-chloropropane	ND	4.4	2.0	ug/kg	
106-93-4	1,2-Dibromoethane	ND	4.4	0.88	ug/kg	
107-06-2	1,2-Dichloroethane	ND	4.4	0.88	ug/kg	
78-87-5	1,2-Dichloropropane	ND	4.4	1.1	ug/kg	
142-28-9	1,3-Dichloropropane	ND	4.4	0.88	ug/kg	
594-20-7	2,2-Dichloropropane	ND	4.4	1.2	ug/kg	

ND = Not detected MDL - Method Detection Limit
RL = Reporting Limit
E = Indicates value exceeds calibration range

J = Indicates an estimated value
B = Indicates analyte found in associated method blank
N = Indicates presumptive evidence of a compound

Report of Analysis

Client Sample ID:	SS39-DPT-13B		
Lab Sample ID:	F78009-26	**Date Sampled:**	11/11/10
Matrix:	SO - Soil	**Date Received:**	11/12/10
Method:	SW846 8260B	**Percent Solids:**	97.1
Project:	Holloman AFB; Alamogordo, NM		

VOA Special List

CAS No.	Compound	Result	RL	MDL	Units	Q
124-48-1	Dibromochloromethane	ND	4.4	0.88	ug/kg	
75-71-8	Dichlorodifluoromethane	ND	4.4	1.3	ug/kg	
156-59-2	cis-1,2-Dichloroethylene	ND	4.4	1.3	ug/kg	
10061-01-5	cis-1,3-Dichloropropene	ND	4.4	0.88	ug/kg	
1476-11-5	cis-1,4-Dichloro-2-Butene	ND	22	4.4	ug/kg	
541-73-1	m-Dichlorobenzene	ND	4.4	1.1	ug/kg	
95-50-1	o-Dichlorobenzene	ND	4.4	0.97	ug/kg	
106-46-7	p-Dichlorobenzene	ND	4.4	0.97	ug/kg	
156-60-5	trans-1,2-Dichloroethylene	ND	4.4	1.3	ug/kg	
10061-02-6	trans-1,3-Dichloropropene	ND	4.4	0.97	ug/kg	
100-41-4	Ethylbenzene	ND	4.4	0.88	ug/kg	
97-63-2	Ethyl methacrylate	ND	22	4.4	ug/kg	
76-13-1	Freon 113	ND	4.4	1.5	ug/kg	
591-78-6	2-Hexanone	ND	22	4.8	ug/kg	
87-68-3	Hexachlorobutadiene	ND	4.4	1.8	ug/kg	
110-54-3	Hexane	ND	4.4	1.7	ug/kg	
98-82-8	Isopropylbenzene	ND	4.4	0.97	ug/kg	
99-87-6	p-Isopropyltoluene	ND	4.4	1.1	ug/kg	
108-10-1	4-Methyl-2-pentanone	ND	22	4.8	ug/kg	
126-98-7	Methacrylonitrile	ND	22	8.1	ug/kg	
74-83-9	Methyl bromide	ND	4.4	1.8	ug/kg	
74-87-3	Methyl chloride	ND	4.4	1.8	ug/kg	
74-88-4	Methyl iodide	ND	8.8	0.97	ug/kg	
80-62-6	Methyl methacrylate	ND	4.4	1.6	ug/kg	
74-95-3	Methylene bromide	ND	4.4	1.3	ug/kg	
75-09-2	Methylene chloride [b]	6.1	8.8	4.1	ug/kg	JB
78-93-3	Methyl ethyl ketone	ND	22	5.4	ug/kg	
1634-04-4	Methyl Tert Butyl Ether	ND	4.4	1.8	ug/kg	
91-20-3	Naphthalene	ND	4.4	1.8	ug/kg	
76-01-7	Pentachloroethane	ND	22	4.4	ug/kg	
107-12-0	Propionitrile	ND	44	14	ug/kg	
103-65-1	n-Propylbenzene	ND	4.4	1.2	ug/kg	
100-42-5	Styrene	ND	4.4	2.3	ug/kg	
630-20-6	1,1,1,2-Tetrachloroethane	ND	4.4	0.88	ug/kg	
71-55-6	1,1,1-Trichloroethane	ND	4.4	0.97	ug/kg	
79-34-5	1,1,2,2-Tetrachloroethane	ND	4.4	1.1	ug/kg	
79-00-5	1,1,2-Trichloroethane	ND	4.4	0.97	ug/kg	
87-61-6	1,2,3-Trichlorobenzene	ND	4.4	0.88	ug/kg	
96-18-4	1,2,3-Trichloropropane	ND	4.4	1.5	ug/kg	
120-82-1	1,2,4-Trichlorobenzene	ND	4.4	1.1	ug/kg	

ND = Not detected MDL - Method Detection Limit
RL = Reporting Limit
E = Indicates value exceeds calibration range

J = Indicates an estimated value
B = Indicates analyte found in associated method blank
N = Indicates presumptive evidence of a compound

Report of Analysis

Client Sample ID:	SS39-DPT-13B		
Lab Sample ID:	F78009-26	**Date Sampled:**	11/11/10
Matrix:	SO - Soil	**Date Received:**	11/12/10
Method:	SW846 8260B	**Percent Solids:**	97.1
Project:	Holloman AFB; Alamogordo, NM		

VOA Special List

CAS No.	Compound	Result	RL	MDL	Units	Q
95-63-6	1,2,4-Trimethylbenzene	ND	4.4	0.97	ug/kg	
108-67-8	1,3,5-Trimethylbenzene	ND	4.4	1.1	ug/kg	
127-18-4	Tetrachloroethylene	ND	4.4	0.88	ug/kg	
108-88-3	Toluene	ND	4.4	1.1	ug/kg	
79-01-6	Trichloroethylene	ND	4.4	1.1	ug/kg	
75-69-4	Trichlorofluoromethane	ND	4.4	1.8	ug/kg	
110-57-6	Trans-1,4-Dichloro-2-Butene	ND	22	4.4	ug/kg	
75-01-4	Vinyl chloride	ND	4.4	1.3	ug/kg	
108-05-4	Vinyl Acetate	ND	22	12	ug/kg	
	m,p-Xylene	ND	8.8	1.9	ug/kg	
95-47-6	o-Xylene	ND	4.4	0.88	ug/kg	

CAS No.	Surrogate Recoveries	Run# 1	Run# 2	Limits
1868-53-7	Dibromofluoromethane	125% [c]	126% [c]	80-121%
2037-26-5	Toluene-D8	76%	73%	71-130%
460-00-4	4-Bromofluorobenzene	103%	103%	59-148%
17060-07-0	1,2-Dichloroethane-D4	121%	127% [d]	77-123%

(a) Confirmation run for surrogate recoveries.
(b) ICV outside of control limits. Suspected laboratory contaminant.
(c) Outside control limits. Confirmed by reanalysis.
(d) Outside control limits.

ND = Not detected MDL - Method Detection Limit
RL = Reporting Limit
E = Indicates value exceeds calibration range

J = Indicates an estimated value
B = Indicates analyte found in associated method blank
N = Indicates presumptive evidence of a compound

Report of Analysis

Client Sample ID:	SS39-DPT-13B		
Lab Sample ID:	F78009-26	**Date Sampled:**	11/11/10
Matrix:	SO - Soil	**Date Received:**	11/12/10
Method:	SW846 8015C	**Percent Solids:**	97.1
Project:	Holloman AFB; Alamogordo, NM		

	File ID	DF	Analyzed	By	Prep Date	Prep Batch	Analytical Batch
Run #1	QR056898.D	1	11/20/10	AH	n/a	n/a	GQR2474
Run #2							

	Initial Weight	Final Volume	Methanol Aliquot
Run #1	6.03 g	5.0 ml	100 ul
Run #2			

CAS No.	Compound	Result	RL	MDL	Units	Q
	TPH-GRO (C6-C10)	ND	4.4	2.2	mg/kg	

CAS No.	Surrogate Recoveries	Run# 1	Run# 2	Limits
460-00-4	4-Bromofluorobenzene	79%		56-136%
98-08-8	aaa-Trifluorotoluene	74%		61-121%

ND = Not detected MDL - Method Detection Limit
RL = Reporting Limit
E = Indicates value exceeds calibration range

J = Indicates an estimated value
B = Indicates analyte found in associated method blank
N = Indicates presumptive evidence of a compound

Report of Analysis

Client Sample ID:	SS39-DPT-13C		
Lab Sample ID:	F78009-27	**Date Sampled:**	11/11/10
Matrix:	SO - Soil	**Date Received:**	11/12/10
Method:	SW846 8260B	**Percent Solids:**	86.3
Project:	Holloman AFB; Alamogordo, NM		

	File ID	DF	Analyzed	By	Prep Date	Prep Batch	Analytical Batch
Run #1	H066190.D	1	11/19/10	MM	n/a	n/a	VH2464
Run #2							

	Initial Weight
Run #1	6.69 g
Run #2	

VOA Special List

CAS No.	Compound	Result	RL	MDL	Units	Q
67-64-1	Acetone	ND	43	17	ug/kg	
75-05-8	Acetonitrile	ND	43	16	ug/kg	
107-02-8	Acrolein	ND	22	9.5	ug/kg	
107-13-1	Acrylonitrile	ND	22	9.9	ug/kg	
107-05-1	Allyl chloride	ND	22	4.3	ug/kg	
71-43-2	Benzene	ND	4.3	1.3	ug/kg	
100-44-7	Benzyl Chloride	ND	4.3	1.3	ug/kg	
108-86-1	Bromobenzene	ND	4.3	1.2	ug/kg	
74-97-5	Bromochloromethane	ND	4.3	1.2	ug/kg	
75-27-4	Bromodichloromethane	ND	4.3	0.95	ug/kg	
75-25-2	Bromoform	ND	4.3	1.3	ug/kg	
104-51-8	n-Butylbenzene	ND	4.3	1.1	ug/kg	
135-98-8	sec-Butylbenzene	ND	4.3	1.4	ug/kg	
98-06-6	tert-Butylbenzene	ND	4.3	1.0	ug/kg	
108-90-7	Chlorobenzene	ND	4.3	0.87	ug/kg	
75-00-3	Chloroethane	ND	4.3	1.7	ug/kg	
67-66-3	Chloroform	ND	4.3	1.0	ug/kg	
544-10-5	1-Chlorohexane	ND	4.3	1.2	ug/kg	
95-49-8	o-Chlorotoluene	ND	4.3	1.0	ug/kg	
106-43-4	p-Chlorotoluene	ND	4.3	1.0	ug/kg	
110-75-8	2-Chloroethyl vinyl ether	ND	22	8.7	ug/kg	
75-15-0	Carbon disulfide	ND	4.3	1.7	ug/kg	
56-23-5	Carbon tetrachloride	ND	4.3	1.6	ug/kg	
75-34-3	1,1-Dichloroethane	ND	4.3	0.95	ug/kg	
75-35-4	1,1-Dichloroethylene	ND	4.3	1.2	ug/kg	
563-58-6	1,1-Dichloropropene	ND	4.3	1.1	ug/kg	
96-12-8	1,2-Dibromo-3-chloropropane	ND	4.3	2.0	ug/kg	
106-93-4	1,2-Dibromoethane	ND	4.3	0.87	ug/kg	
107-06-2	1,2-Dichloroethane	ND	4.3	0.87	ug/kg	
78-87-5	1,2-Dichloropropane	ND	4.3	1.0	ug/kg	
142-28-9	1,3-Dichloropropane	ND	4.3	0.87	ug/kg	
594-20-7	2,2-Dichloropropane	ND	4.3	1.2	ug/kg	

ND = Not detected MDL - Method Detection Limit
RL = Reporting Limit
E = Indicates value exceeds calibration range

J = Indicates an estimated value
B = Indicates analyte found in associated method blank
N = Indicates presumptive evidence of a compound

Report of Analysis

Client Sample ID:	SS39-DPT-13C		
Lab Sample ID:	F78009-27	**Date Sampled:**	11/11/10
Matrix:	SO - Soil	**Date Received:**	11/12/10
Method:	SW846 8260B	**Percent Solids:**	86.3
Project:	Holloman AFB; Alamogordo, NM		

VOA Special List

CAS No.	Compound	Result	RL	MDL	Units	Q
124-48-1	Dibromochloromethane	ND	4.3	0.87	ug/kg	
75-71-8	Dichlorodifluoromethane	ND	4.3	1.3	ug/kg	
156-59-2	cis-1,2-Dichloroethylene	ND	4.3	1.3	ug/kg	
10061-01-5	cis-1,3-Dichloropropene	ND	4.3	0.87	ug/kg	
1476-11-5	cis-1,4-Dichloro-2-Butene	ND	22	4.3	ug/kg	
541-73-1	m-Dichlorobenzene	ND	4.3	1.0	ug/kg	
95-50-1	o-Dichlorobenzene	ND	4.3	0.95	ug/kg	
106-46-7	p-Dichlorobenzene	ND	4.3	0.95	ug/kg	
156-60-5	trans-1,2-Dichloroethylene	ND	4.3	1.3	ug/kg	
10061-02-6	trans-1,3-Dichloropropene	ND	4.3	0.95	ug/kg	
100-41-4	Ethylbenzene	ND	4.3	0.87	ug/kg	
97-63-2	Ethyl methacrylate	ND	22	4.3	ug/kg	
76-13-1	Freon 113	ND	4.3	1.5	ug/kg	
591-78-6	2-Hexanone	ND	22	4.7	ug/kg	
87-68-3	Hexachlorobutadiene	ND	4.3	1.7	ug/kg	
110-54-3	Hexane	ND	4.3	1.6	ug/kg	
98-82-8	Isopropylbenzene	ND	4.3	0.95	ug/kg	
99-87-6	p-Isopropyltoluene	ND	4.3	1.0	ug/kg	
108-10-1	4-Methyl-2-pentanone	ND	22	4.8	ug/kg	
126-98-7	Methacrylonitrile	ND	22	8.0	ug/kg	
74-83-9	Methyl bromide	ND	4.3	1.7	ug/kg	
74-87-3	Methyl chloride	ND	4.3	1.7	ug/kg	
74-88-4	Methyl iodide	ND	8.7	0.95	ug/kg	
80-62-6	Methyl methacrylate	ND	4.3	1.6	ug/kg	
74-95-3	Methylene bromide	ND	4.3	1.3	ug/kg	
75-09-2	Methylene chloride	ND	8.7	4.0	ug/kg	
78-93-3	Methyl ethyl ketone	ND	22	5.3	ug/kg	
1634-04-4	Methyl Tert Butyl Ether	ND	4.3	1.7	ug/kg	
91-20-3	Naphthalene	ND	4.3	1.7	ug/kg	
76-01-7	Pentachloroethane	ND	22	4.3	ug/kg	
107-12-0	Propionitrile	ND	43	14	ug/kg	
103-65-1	n-Propylbenzene	ND	4.3	1.2	ug/kg	
100-42-5	Styrene	ND	4.3	2.3	ug/kg	
630-20-6	1,1,1,2-Tetrachloroethane	ND	4.3	0.87	ug/kg	
71-55-6	1,1,1-Trichloroethane	ND	4.3	0.95	ug/kg	
79-34-5	1,1,2,2-Tetrachloroethane	ND	4.3	1.0	ug/kg	
79-00-5	1,1,2-Trichloroethane	ND	4.3	0.95	ug/kg	
87-61-6	1,2,3-Trichlorobenzene	ND	4.3	0.87	ug/kg	
96-18-4	1,2,3-Trichloropropane	ND	4.3	1.5	ug/kg	
120-82-1	1,2,4-Trichlorobenzene	ND	4.3	1.0	ug/kg	

ND = Not detected MDL - Method Detection Limit
RL = Reporting Limit
E = Indicates value exceeds calibration range

J = Indicates an estimated value
B = Indicates analyte found in associated method blank
N = Indicates presumptive evidence of a compound

Report of Analysis

Client Sample ID:	SS39-DPT-13C		
Lab Sample ID:	F78009-27	**Date Sampled:**	11/11/10
Matrix:	SO - Soil	**Date Received:**	11/12/10
Method:	SW846 8260B	**Percent Solids:**	86.3
Project:	Holloman AFB; Alamogordo, NM		

VOA Special List

CAS No.	Compound	Result	RL	MDL	Units	Q
95-63-6	1,2,4-Trimethylbenzene	ND	4.3	0.95	ug/kg	
108-67-8	1,3,5-Trimethylbenzene	ND	4.3	1.1	ug/kg	
127-18-4	Tetrachloroethylene	ND	4.3	0.87	ug/kg	
108-88-3	Toluene	ND	4.3	1.0	ug/kg	
79-01-6	Trichloroethylene	ND	4.3	1.0	ug/kg	
75-69-4	Trichlorofluoromethane	ND	4.3	1.7	ug/kg	
110-57-6	Trans-1,4-Dichloro-2-Butene	ND	22	4.3	ug/kg	
75-01-4	Vinyl chloride	ND	4.3	1.3	ug/kg	
108-05-4	Vinyl Acetate	ND	22	12	ug/kg	
	m,p-Xylene	ND	8.7	1.9	ug/kg	
95-47-6	o-Xylene	ND	4.3	0.87	ug/kg	

CAS No.	Surrogate Recoveries	Run# 1	Run# 2	Limits
1868-53-7	Dibromofluoromethane	123% [a]		80-121%
2037-26-5	Toluene-D8	74%		71-130%
460-00-4	4-Bromofluorobenzene	107%		59-148%
17060-07-0	1,2-Dichloroethane-D4	122%		77-123%

(a) Outside control limits; however, sample is ND.

ND = Not detected MDL - Method Detection Limit
RL = Reporting Limit
E = Indicates value exceeds calibration range

J = Indicates an estimated value
B = Indicates analyte found in associated method blank
N = Indicates presumptive evidence of a compound

Report of Analysis

Client Sample ID:	SS39-DPT-13C		
Lab Sample ID:	F78009-27	**Date Sampled:**	11/11/10
Matrix:	SO - Soil	**Date Received:**	11/12/10
Method:	SW846 8015C	**Percent Solids:**	86.3
Project:	Holloman AFB; Alamogordo, NM		

	File ID	DF	Analyzed	By	Prep Date	Prep Batch	Analytical Batch
Run #1	QR056899.D	1	11/20/10	AH	n/a	n/a	GQR2474
Run #2							

	Initial Weight	Final Volume	Methanol Aliquot
Run #1	5.91 g	5.0 ml	100 ul
Run #2			

CAS No.	Compound	Result	RL	MDL	Units	Q
	TPH-GRO (C6-C10)	ND	5.7	2.8	mg/kg	

CAS No.	Surrogate Recoveries	Run# 1	Run# 2	Limits
460-00-4	4-Bromofluorobenzene	81%		56-136%
98-08-8	aaa-Trifluorotoluene	74%		61-121%

ND = Not detected MDL - Method Detection Limit
RL = Reporting Limit
E = Indicates value exceeds calibration range

J = Indicates an estimated value
B = Indicates analyte found in associated method blank
N = Indicates presumptive evidence of a compound

Report of Analysis

Client Sample ID:	SS39-DPT-14A		
Lab Sample ID:	F78009-28	**Date Sampled:**	11/11/10
Matrix:	SO - Soil	**Date Received:**	11/12/10
Method:	SW846 8260B	**Percent Solids:**	95.7
Project:	Holloman AFB; Alamogordo, NM		

	File ID	DF	Analyzed	By	Prep Date	Prep Batch	Analytical Batch
Run #1	H066231.D	1	11/20/10	MM	n/a	n/a	VH2465
Run #2 [a]	H066191.D	1	11/19/10	MM	n/a	n/a	VH2464

	Initial Weight
Run #1	6.51 g
Run #2	5.33 g

VOA Special List

CAS No.	Compound	Result	RL	MDL	Units	Q
67-64-1	Acetone	ND	40	16	ug/kg	
75-05-8	Acetonitrile	ND	40	14	ug/kg	
107-02-8	Acrolein	ND	20	8.8	ug/kg	
107-13-1	Acrylonitrile	ND	20	9.1	ug/kg	
107-05-1	Allyl chloride	ND	20	4.0	ug/kg	
71-43-2	Benzene	ND	4.0	1.2	ug/kg	
100-44-7	Benzyl Chloride	ND	4.0	1.2	ug/kg	
108-86-1	Bromobenzene	ND	4.0	1.1	ug/kg	
74-97-5	Bromochloromethane	ND	4.0	1.1	ug/kg	
75-27-4	Bromodichloromethane	ND	4.0	0.88	ug/kg	
75-25-2	Bromoform	ND	4.0	1.2	ug/kg	
104-51-8	n-Butylbenzene	ND	4.0	1.0	ug/kg	
135-98-8	sec-Butylbenzene	ND	4.0	1.3	ug/kg	
98-06-6	tert-Butylbenzene	ND	4.0	0.96	ug/kg	
108-90-7	Chlorobenzene	ND	4.0	0.80	ug/kg	
75-00-3	Chloroethane	ND	4.0	1.6	ug/kg	
67-66-3	Chloroform	ND	4.0	0.96	ug/kg	
544-10-5	1-Chlorohexane	ND	4.0	1.1	ug/kg	
95-49-8	o-Chlorotoluene	ND	4.0	0.96	ug/kg	
106-43-4	p-Chlorotoluene	ND	4.0	0.96	ug/kg	
110-75-8	2-Chloroethyl vinyl ether	ND	20	8.0	ug/kg	
75-15-0	Carbon disulfide	ND	4.0	1.6	ug/kg	
56-23-5	Carbon tetrachloride	ND	4.0	1.4	ug/kg	
75-34-3	1,1-Dichloroethane	ND	4.0	0.88	ug/kg	
75-35-4	1,1-Dichloroethylene	ND	4.0	1.1	ug/kg	
563-58-6	1,1-Dichloropropene	ND	4.0	1.0	ug/kg	
96-12-8	1,2-Dibromo-3-chloropropane	ND	4.0	1.8	ug/kg	
106-93-4	1,2-Dibromoethane	ND	4.0	0.80	ug/kg	
107-06-2	1,2-Dichloroethane	ND	4.0	0.80	ug/kg	
78-87-5	1,2-Dichloropropane	ND	4.0	0.96	ug/kg	
142-28-9	1,3-Dichloropropane	ND	4.0	0.80	ug/kg	
594-20-7	2,2-Dichloropropane	ND	4.0	1.1	ug/kg	

ND = Not detected MDL - Method Detection Limit
RL = Reporting Limit
E = Indicates value exceeds calibration range

J = Indicates an estimated value
B = Indicates analyte found in associated method blank
N = Indicates presumptive evidence of a compound

Report of Analysis

Client Sample ID:	SS39-DPT-14A		
Lab Sample ID:	F78009-28	**Date Sampled:**	11/11/10
Matrix:	SO - Soil	**Date Received:**	11/12/10
Method:	SW846 8260B	**Percent Solids:**	95.7
Project:	Holloman AFB; Alamogordo, NM		

VOA Special List

CAS No.	Compound	Result	RL	MDL	Units	Q
124-48-1	Dibromochloromethane	ND	4.0	0.80	ug/kg	
75-71-8	Dichlorodifluoromethane	ND	4.0	1.2	ug/kg	
156-59-2	cis-1,2-Dichloroethylene	ND	4.0	1.2	ug/kg	
10061-01-5	cis-1,3-Dichloropropene	ND	4.0	0.80	ug/kg	
1476-11-5	cis-1,4-Dichloro-2-Butene	ND	20	4.0	ug/kg	
541-73-1	m-Dichlorobenzene	ND	4.0	0.96	ug/kg	
95-50-1	o-Dichlorobenzene	ND	4.0	0.88	ug/kg	
106-46-7	p-Dichlorobenzene	ND	4.0	0.88	ug/kg	
156-60-5	trans-1,2-Dichloroethylene	ND	4.0	1.2	ug/kg	
10061-02-6	trans-1,3-Dichloropropene	ND	4.0	0.88	ug/kg	
100-41-4	Ethylbenzene	ND	4.0	0.80	ug/kg	
97-63-2	Ethyl methacrylate	ND	20	4.0	ug/kg	
76-13-1	Freon 113	ND	4.0	1.4	ug/kg	
591-78-6	2-Hexanone	ND	20	4.3	ug/kg	
87-68-3	Hexachlorobutadiene	ND	4.0	1.6	ug/kg	
110-54-3	Hexane	ND	4.0	1.5	ug/kg	
98-82-8	Isopropylbenzene	ND	4.0	0.88	ug/kg	
99-87-6	p-Isopropyltoluene	ND	4.0	0.96	ug/kg	
108-10-1	4-Methyl-2-pentanone	ND	20	4.4	ug/kg	
126-98-7	Methacrylonitrile	ND	20	7.4	ug/kg	
74-83-9	Methyl bromide	ND	4.0	1.6	ug/kg	
74-87-3	Methyl chloride	ND	4.0	1.6	ug/kg	
74-88-4	Methyl iodide	ND	8.0	0.88	ug/kg	
80-62-6	Methyl methacrylate	ND	4.0	1.4	ug/kg	
74-95-3	Methylene bromide	ND	4.0	1.2	ug/kg	
75-09-2	Methylene chloride [b]	7.8	8.0	3.7	ug/kg	JB
78-93-3	Methyl ethyl ketone	ND	20	4.9	ug/kg	
1634-04-4	Methyl Tert Butyl Ether	ND	4.0	1.6	ug/kg	
91-20-3	Naphthalene	ND	4.0	1.6	ug/kg	
76-01-7	Pentachloroethane	ND	20	4.0	ug/kg	
107-12-0	Propionitrile	ND	40	13	ug/kg	
103-65-1	n-Propylbenzene	ND	4.0	1.1	ug/kg	
100-42-5	Styrene	ND	4.0	2.1	ug/kg	
630-20-6	1,1,1,2-Tetrachloroethane	ND	4.0	0.80	ug/kg	
71-55-6	1,1,1-Trichloroethane	ND	4.0	0.88	ug/kg	
79-34-5	1,1,2,2-Tetrachloroethane	ND	4.0	0.96	ug/kg	
79-00-5	1,1,2-Trichloroethane	ND	4.0	0.88	ug/kg	
87-61-6	1,2,3-Trichlorobenzene	ND	4.0	0.80	ug/kg	
96-18-4	1,2,3-Trichloropropane	ND	4.0	1.4	ug/kg	
120-82-1	1,2,4-Trichlorobenzene	ND	4.0	0.96	ug/kg	

ND = Not detected MDL - Method Detection Limit
RL = Reporting Limit
E = Indicates value exceeds calibration range

J = Indicates an estimated value
B = Indicates analyte found in associated method blank
N = Indicates presumptive evidence of a compound

Report of Analysis

Client Sample ID:	SS39-DPT-14A		
Lab Sample ID:	F78009-28	**Date Sampled:**	11/11/10
Matrix:	SO - Soil	**Date Received:**	11/12/10
Method:	SW846 8260B	**Percent Solids:**	95.7
Project:	Holloman AFB; Alamogordo, NM		

VOA Special List

CAS No.	Compound	Result	RL	MDL	Units	Q
95-63-6	1,2,4-Trimethylbenzene	ND	4.0	0.88	ug/kg	
108-67-8	1,3,5-Trimethylbenzene	ND	4.0	1.0	ug/kg	
127-18-4	Tetrachloroethylene	ND	4.0	0.80	ug/kg	
108-88-3	Toluene	ND	4.0	0.96	ug/kg	
79-01-6	Trichloroethylene	ND	4.0	0.96	ug/kg	
75-69-4	Trichlorofluoromethane	ND	4.0	1.6	ug/kg	
110-57-6	Trans-1,4-Dichloro-2-Butene	ND	20	4.0	ug/kg	
75-01-4	Vinyl chloride	ND	4.0	1.2	ug/kg	
108-05-4	Vinyl Acetate	ND	20	11	ug/kg	
	m,p-Xylene	ND	8.0	1.8	ug/kg	
95-47-6	o-Xylene	ND	4.0	0.80	ug/kg	

CAS No.	Surrogate Recoveries	Run# 1	Run# 2	Limits
1868-53-7	Dibromofluoromethane	126% c	121%	80-121%
2037-26-5	Toluene-D8	74%	72%	71-130%
460-00-4	4-Bromofluorobenzene	103%	103%	59-148%
17060-07-0	1,2-Dichloroethane-D4	128% d	125% d	77-123%

(a) Confirmation run for surrogate recoveries.
(b) ICV outside of control limits. Suspected laboratory contaminant.
(c) Outside control limits.
(d) Outside control limits. Confirmed by reanalysis.

ND = Not detected MDL - Method Detection Limit
RL = Reporting Limit
E = Indicates value exceeds calibration range

J = Indicates an estimated value
B = Indicates analyte found in associated method blank
N = Indicates presumptive evidence of a compound

Accutest Laboratories

Report of Analysis

Client Sample ID:	SS39-DPT-14A		
Lab Sample ID:	F78009-28	**Date Sampled:**	11/11/10
Matrix:	SO - Soil	**Date Received:**	11/12/10
Method:	SW846 8015C	**Percent Solids:**	95.7
Project:	Holloman AFB; Alamogordo, NM		

	File ID	DF	Analyzed	By	Prep Date	Prep Batch	Analytical Batch
Run #1	QR056902.D	1	11/20/10	AH	n/a	n/a	GQR2474
Run #2							

	Initial Weight	Final Volume	Methanol Aliquot
Run #1	5.47 g	5.0 ml	100 ul
Run #2			

CAS No.	Compound	Result	RL	MDL	Units	Q
	TPH-GRO (C6-C10)	ND	5.0	2.5	mg/kg	

CAS No.	Surrogate Recoveries	Run# 1	Run# 2	Limits
460-00-4	4-Bromofluorobenzene	81%		56-136%
98-08-8	aaa-Trifluorotoluene	75%		61-121%

ND = Not detected MDL - Method Detection Limit
RL = Reporting Limit
E = Indicates value exceeds calibration range

J = Indicates an estimated value
B = Indicates analyte found in associated method blank
N = Indicates presumptive evidence of a compound

Report of Analysis

Client Sample ID:	SS39-DPT-14B		
Lab Sample ID:	F78009-29	**Date Sampled:**	11/11/10
Matrix:	SO - Soil	**Date Received:**	11/12/10
Method:	SW846 8260B	**Percent Solids:**	97.4
Project:	Holloman AFB; Alamogordo, NM		

	File ID	DF	Analyzed	By	Prep Date	Prep Batch	Analytical Batch
Run #1	H066232.D	1	11/20/10	MM	n/a	n/a	VH2465
Run #2 [a]	H066192.D	1	11/19/10	MM	n/a	n/a	VH2464

	Initial Weight
Run #1	6.12 g
Run #2	6.28 g

VOA Special List

CAS No.	Compound	Result	RL	MDL	Units	Q
67-64-1	Acetone	ND	42	17	ug/kg	
75-05-8	Acetonitrile	ND	42	15	ug/kg	
107-02-8	Acrolein	ND	21	9.2	ug/kg	
107-13-1	Acrylonitrile	ND	21	9.6	ug/kg	
107-05-1	Allyl chloride	ND	21	4.2	ug/kg	
71-43-2	Benzene	ND	4.2	1.3	ug/kg	
100-44-7	Benzyl Chloride	ND	4.2	1.3	ug/kg	
108-86-1	Bromobenzene	ND	4.2	1.2	ug/kg	
74-97-5	Bromochloromethane	ND	4.2	1.2	ug/kg	
75-27-4	Bromodichloromethane	ND	4.2	0.92	ug/kg	
75-25-2	Bromoform	ND	4.2	1.3	ug/kg	
104-51-8	n-Butylbenzene	ND	4.2	1.1	ug/kg	
135-98-8	sec-Butylbenzene	ND	4.2	1.3	ug/kg	
98-06-6	tert-Butylbenzene	ND	4.2	1.0	ug/kg	
108-90-7	Chlorobenzene	ND	4.2	0.84	ug/kg	
75-00-3	Chloroethane	ND	4.2	1.7	ug/kg	
67-66-3	Chloroform	ND	4.2	1.0	ug/kg	
544-10-5	1-Chlorohexane	ND	4.2	1.2	ug/kg	
95-49-8	o-Chlorotoluene	ND	4.2	1.0	ug/kg	
106-43-4	p-Chlorotoluene	ND	4.2	1.0	ug/kg	
110-75-8	2-Chloroethyl vinyl ether	ND	21	8.4	ug/kg	
75-15-0	Carbon disulfide	ND	4.2	1.7	ug/kg	
56-23-5	Carbon tetrachloride	ND	4.2	1.5	ug/kg	
75-34-3	1,1-Dichloroethane	ND	4.2	0.92	ug/kg	
75-35-4	1,1-Dichloroethylene	ND	4.2	1.2	ug/kg	
563-58-6	1,1-Dichloropropene	ND	4.2	1.1	ug/kg	
96-12-8	1,2-Dibromo-3-chloropropane	ND	4.2	1.9	ug/kg	
106-93-4	1,2-Dibromoethane	ND	4.2	0.84	ug/kg	
107-06-2	1,2-Dichloroethane	ND	4.2	0.84	ug/kg	
78-87-5	1,2-Dichloropropane	ND	4.2	1.0	ug/kg	
142-28-9	1,3-Dichloropropane	ND	4.2	0.84	ug/kg	
594-20-7	2,2-Dichloropropane	ND	4.2	1.2	ug/kg	

ND = Not detected MDL - Method Detection Limit
RL = Reporting Limit
E = Indicates value exceeds calibration range

J = Indicates an estimated value
B = Indicates analyte found in associated method blank
N = Indicates presumptive evidence of a compound

Report of Analysis

Client Sample ID:	SS39-DPT-14B		
Lab Sample ID:	F78009-29	**Date Sampled:**	11/11/10
Matrix:	SO - Soil	**Date Received:**	11/12/10
Method:	SW846 8260B	**Percent Solids:**	97.4
Project:	Holloman AFB; Alamogordo, NM		

VOA Special List

CAS No.	Compound	Result	RL	MDL	Units	Q
124-48-1	Dibromochloromethane	ND	4.2	0.84	ug/kg	
75-71-8	Dichlorodifluoromethane	ND	4.2	1.3	ug/kg	
156-59-2	cis-1,2-Dichloroethylene	ND	4.2	1.3	ug/kg	
10061-01-5	cis-1,3-Dichloropropene	ND	4.2	0.84	ug/kg	
1476-11-5	cis-1,4-Dichloro-2-Butene	ND	21	4.2	ug/kg	
541-73-1	m-Dichlorobenzene	ND	4.2	1.0	ug/kg	
95-50-1	o-Dichlorobenzene	ND	4.2	0.92	ug/kg	
106-46-7	p-Dichlorobenzene	ND	4.2	0.92	ug/kg	
156-60-5	trans-1,2-Dichloroethylene	ND	4.2	1.3	ug/kg	
10061-02-6	trans-1,3-Dichloropropene	ND	4.2	0.92	ug/kg	
100-41-4	Ethylbenzene	ND	4.2	0.84	ug/kg	
97-63-2	Ethyl methacrylate	ND	21	4.2	ug/kg	
76-13-1	Freon 113	ND	4.2	1.4	ug/kg	
591-78-6	2-Hexanone	ND	21	4.5	ug/kg	
87-68-3	Hexachlorobutadiene	ND	4.2	1.7	ug/kg	
110-54-3	Hexane	ND	4.2	1.6	ug/kg	
98-82-8	Isopropylbenzene	ND	4.2	0.92	ug/kg	
99-87-6	p-Isopropyltoluene	ND	4.2	1.0	ug/kg	
108-10-1	4-Methyl-2-pentanone	ND	21	4.6	ug/kg	
126-98-7	Methacrylonitrile	ND	21	7.7	ug/kg	
74-83-9	Methyl bromide	ND	4.2	1.7	ug/kg	
74-87-3	Methyl chloride	ND	4.2	1.7	ug/kg	
74-88-4	Methyl iodide	ND	8.4	0.92	ug/kg	
80-62-6	Methyl methacrylate	ND	4.2	1.5	ug/kg	
74-95-3	Methylene bromide	ND	4.2	1.3	ug/kg	
75-09-2	Methylene chloride [b]	6.2	8.4	3.9	ug/kg	JB
78-93-3	Methyl ethyl ketone	ND	21	5.1	ug/kg	
1634-04-4	Methyl Tert Butyl Ether	ND	4.2	1.7	ug/kg	
91-20-3	Naphthalene	ND	4.2	1.7	ug/kg	
76-01-7	Pentachloroethane	ND	21	4.2	ug/kg	
107-12-0	Propionitrile	ND	42	13	ug/kg	
103-65-1	n-Propylbenzene	ND	4.2	1.2	ug/kg	
100-42-5	Styrene	ND	4.2	2.2	ug/kg	
630-20-6	1,1,1,2-Tetrachloroethane	ND	4.2	0.84	ug/kg	
71-55-6	1,1,1-Trichloroethane	ND	4.2	0.92	ug/kg	
79-34-5	1,1,2,2-Tetrachloroethane	ND	4.2	1.0	ug/kg	
79-00-5	1,1,2-Trichloroethane	ND	4.2	0.92	ug/kg	
87-61-6	1,2,3-Trichlorobenzene	ND	4.2	0.84	ug/kg	
96-18-4	1,2,3-Trichloropropane	ND	4.2	1.4	ug/kg	
120-82-1	1,2,4-Trichlorobenzene	ND	4.2	1.0	ug/kg	

ND = Not detected MDL - Method Detection Limit
RL = Reporting Limit
E = Indicates value exceeds calibration range

J = Indicates an estimated value
B = Indicates analyte found in associated method blank
N = Indicates presumptive evidence of a compound

Report of Analysis

Client Sample ID:	SS39-DPT-14B		
Lab Sample ID:	F78009-29	**Date Sampled:**	11/11/10
Matrix:	SO - Soil	**Date Received:**	11/12/10
Method:	SW846 8260B	**Percent Solids:**	97.4
Project:	Holloman AFB; Alamogordo, NM		

VOA Special List

CAS No.	Compound	Result	RL	MDL	Units	Q
95-63-6	1,2,4-Trimethylbenzene	ND	4.2	0.92	ug/kg	
108-67-8	1,3,5-Trimethylbenzene	ND	4.2	1.1	ug/kg	
127-18-4	Tetrachloroethylene	ND	4.2	0.84	ug/kg	
108-88-3	Toluene	ND	4.2	1.0	ug/kg	
79-01-6	Trichloroethylene	ND	4.2	1.0	ug/kg	
75-69-4	Trichlorofluoromethane	ND	4.2	1.7	ug/kg	
110-57-6	Trans-1,4-Dichloro-2-Butene	ND	21	4.2	ug/kg	
75-01-4	Vinyl chloride	ND	4.2	1.3	ug/kg	
108-05-4	Vinyl Acetate	ND	21	12	ug/kg	
	m,p-Xylene	ND	8.4	1.8	ug/kg	
95-47-6	o-Xylene	ND	4.2	0.84	ug/kg	

CAS No.	Surrogate Recoveries	Run# 1	Run# 2	Limits
1868-53-7	Dibromofluoromethane	126% c	125% c	80-121%
2037-26-5	Toluene-D8	76%	75%	71-130%
460-00-4	4-Bromofluorobenzene	102%	97%	59-148%
17060-07-0	1,2-Dichloroethane-D4	124% c	131% c	77-123%

(a) Confirmation run for surrogate recoveries.
(b) ICV outside of control limits. Suspected laboratory contaminant.
(c) Outside control limits. Confirmed by reanalysis.

ND = Not detected MDL - Method Detection Limit
RL = Reporting Limit
E = Indicates value exceeds calibration range

J = Indicates an estimated value
B = Indicates analyte found in associated method blank
N = Indicates presumptive evidence of a compound

Report of Analysis

Client Sample ID:	SS39-DPT-14B		
Lab Sample ID:	F78009-29	**Date Sampled:**	11/11/10
Matrix:	SO - Soil	**Date Received:**	11/12/10
Method:	SW846 8015C	**Percent Solids:**	97.4
Project:	Holloman AFB; Alamogordo, NM		

	File ID	DF	Analyzed	By	Prep Date	Prep Batch	Analytical Batch
Run #1	QR056903.D	1	11/20/10	AH	n/a	n/a	GQR2474
Run #2							

	Initial Weight	Final Volume	Methanol Aliquot
Run #1	6.31 g	5.0 ml	100 ul
Run #2			

CAS No.	Compound	Result	RL	MDL	Units	Q
	TPH-GRO (C6-C10)	ND	4.2	2.1	mg/kg	

CAS No.	Surrogate Recoveries	Run# 1	Run# 2	Limits
460-00-4	4-Bromofluorobenzene	81%		56-136%
98-08-8	aaa-Trifluorotoluene	73%		61-121%

ND = Not detected MDL - Method Detection Limit
RL = Reporting Limit
E = Indicates value exceeds calibration range

J = Indicates an estimated value
B = Indicates analyte found in associated method blank
N = Indicates presumptive evidence of a compound

Report of Analysis

Client Sample ID:	SS39-DPT-14C		
Lab Sample ID:	F78009-30	**Date Sampled:**	11/11/10
Matrix:	SO - Soil	**Date Received:**	11/12/10
Method:	SW846 8260B	**Percent Solids:**	89.1
Project:	Holloman AFB; Alamogordo, NM		

	File ID	DF	Analyzed	By	Prep Date	Prep Batch	Analytical Batch
Run #1	H066233.D	1	11/20/10	MM	n/a	n/a	VH2465
Run #2 [a]	H066193.D	1	11/19/10	MM	n/a	n/a	VH2464

	Initial Weight
Run #1	6.01 g
Run #2	6.10 g

VOA Special List

CAS No.	Compound	Result	RL	MDL	Units	Q
67-64-1	Acetone	ND	47	19	ug/kg	
75-05-8	Acetonitrile	ND	47	17	ug/kg	
107-02-8	Acrolein	ND	23	10	ug/kg	
107-13-1	Acrylonitrile	ND	23	11	ug/kg	
107-05-1	Allyl chloride	ND	23	4.7	ug/kg	
71-43-2	Benzene	ND	4.7	1.4	ug/kg	
100-44-7	Benzyl Chloride	ND	4.7	1.4	ug/kg	
108-86-1	Bromobenzene	ND	4.7	1.3	ug/kg	
74-97-5	Bromochloromethane	ND	4.7	1.3	ug/kg	
75-27-4	Bromodichloromethane	ND	4.7	1.0	ug/kg	
75-25-2	Bromoform	ND	4.7	1.4	ug/kg	
104-51-8	n-Butylbenzene	ND	4.7	1.2	ug/kg	
135-98-8	sec-Butylbenzene	ND	4.7	1.5	ug/kg	
98-06-6	tert-Butylbenzene	ND	4.7	1.1	ug/kg	
108-90-7	Chlorobenzene	ND	4.7	0.93	ug/kg	
75-00-3	Chloroethane	ND	4.7	1.9	ug/kg	
67-66-3	Chloroform	ND	4.7	1.1	ug/kg	
544-10-5	1-Chlorohexane	ND	4.7	1.3	ug/kg	
95-49-8	o-Chlorotoluene	ND	4.7	1.1	ug/kg	
106-43-4	p-Chlorotoluene	ND	4.7	1.1	ug/kg	
110-75-8	2-Chloroethyl vinyl ether	ND	23	9.3	ug/kg	
75-15-0	Carbon disulfide	ND	4.7	1.9	ug/kg	
56-23-5	Carbon tetrachloride	ND	4.7	1.7	ug/kg	
75-34-3	1,1-Dichloroethane	ND	4.7	1.0	ug/kg	
75-35-4	1,1-Dichloroethylene	ND	4.7	1.3	ug/kg	
563-58-6	1,1-Dichloropropene	ND	4.7	1.2	ug/kg	
96-12-8	1,2-Dibromo-3-chloropropane	ND	4.7	2.1	ug/kg	
106-93-4	1,2-Dibromoethane	ND	4.7	0.93	ug/kg	
107-06-2	1,2-Dichloroethane	ND	4.7	0.93	ug/kg	
78-87-5	1,2-Dichloropropane	ND	4.7	1.1	ug/kg	
142-28-9	1,3-Dichloropropane	ND	4.7	0.93	ug/kg	
594-20-7	2,2-Dichloropropane	ND	4.7	1.3	ug/kg	

ND = Not detected MDL - Method Detection Limit
RL = Reporting Limit
E = Indicates value exceeds calibration range

J = Indicates an estimated value
B = Indicates analyte found in associated method blank
N = Indicates presumptive evidence of a compound

Report of Analysis

Client Sample ID:	SS39-DPT-14C		
Lab Sample ID:	F78009-30	**Date Sampled:**	11/11/10
Matrix:	SO - Soil	**Date Received:**	11/12/10
Method:	SW846 8260B	**Percent Solids:**	89.1
Project:	Holloman AFB; Alamogordo, NM		

VOA Special List

CAS No.	Compound	Result	RL	MDL	Units	Q
124-48-1	Dibromochloromethane	ND	4.7	0.93	ug/kg	
75-71-8	Dichlorodifluoromethane	ND	4.7	1.4	ug/kg	
156-59-2	cis-1,2-Dichloroethylene	ND	4.7	1.4	ug/kg	
10061-01-5	cis-1,3-Dichloropropene	ND	4.7	0.93	ug/kg	
1476-11-5	cis-1,4-Dichloro-2-Butene	ND	23	4.7	ug/kg	
541-73-1	m-Dichlorobenzene	ND	4.7	1.1	ug/kg	
95-50-1	o-Dichlorobenzene	ND	4.7	1.0	ug/kg	
106-46-7	p-Dichlorobenzene	ND	4.7	1.0	ug/kg	
156-60-5	trans-1,2-Dichloroethylene	ND	4.7	1.4	ug/kg	
10061-02-6	trans-1,3-Dichloropropene	ND	4.7	1.0	ug/kg	
100-41-4	Ethylbenzene	ND	4.7	0.93	ug/kg	
97-63-2	Ethyl methacrylate	ND	23	4.7	ug/kg	
76-13-1	Freon 113	ND	4.7	1.6	ug/kg	
591-78-6	2-Hexanone	ND	23	5.0	ug/kg	
87-68-3	Hexachlorobutadiene	ND	4.7	1.9	ug/kg	
110-54-3	Hexane	ND	4.7	1.8	ug/kg	
98-82-8	Isopropylbenzene	ND	4.7	1.0	ug/kg	
99-87-6	p-Isopropyltoluene	ND	4.7	1.1	ug/kg	
108-10-1	4-Methyl-2-pentanone	ND	23	5.1	ug/kg	
126-98-7	Methacrylonitrile	ND	23	8.6	ug/kg	
74-83-9	Methyl bromide	ND	4.7	1.9	ug/kg	
74-87-3	Methyl chloride	ND	4.7	1.9	ug/kg	
74-88-4	Methyl iodide	ND	9.3	1.0	ug/kg	
80-62-6	Methyl methacrylate	ND	4.7	1.7	ug/kg	
74-95-3	Methylene bromide	ND	4.7	1.4	ug/kg	
75-09-2	Methylene chloride [b]	12.5	9.3	4.3	ug/kg	B
78-93-3	Methyl ethyl ketone	ND	23	5.7	ug/kg	
1634-04-4	Methyl Tert Butyl Ether	ND	4.7	1.9	ug/kg	
91-20-3	Naphthalene	ND	4.7	1.9	ug/kg	
76-01-7	Pentachloroethane	ND	23	4.7	ug/kg	
107-12-0	Propionitrile	ND	47	15	ug/kg	
103-65-1	n-Propylbenzene	ND	4.7	1.3	ug/kg	
100-42-5	Styrene	ND	4.7	2.4	ug/kg	
630-20-6	1,1,1,2-Tetrachloroethane	ND	4.7	0.93	ug/kg	
71-55-6	1,1,1-Trichloroethane	ND	4.7	1.0	ug/kg	
79-34-5	1,1,2,2-Tetrachloroethane	ND	4.7	1.1	ug/kg	
79-00-5	1,1,2-Trichloroethane	ND	4.7	1.0	ug/kg	
87-61-6	1,2,3-Trichlorobenzene	ND	4.7	0.93	ug/kg	
96-18-4	1,2,3-Trichloropropane	ND	4.7	1.6	ug/kg	
120-82-1	1,2,4-Trichlorobenzene	ND	4.7	1.1	ug/kg	

ND = Not detected MDL - Method Detection Limit
RL = Reporting Limit
E = Indicates value exceeds calibration range

J = Indicates an estimated value
B = Indicates analyte found in associated method blank
N = Indicates presumptive evidence of a compound

Report of Analysis

Client Sample ID:	SS39-DPT-14C		
Lab Sample ID:	F78009-30	**Date Sampled:**	11/11/10
Matrix:	SO - Soil	**Date Received:**	11/12/10
Method:	SW846 8260B	**Percent Solids:**	89.1
Project:	Holloman AFB; Alamogordo, NM		

VOA Special List

CAS No.	Compound	Result	RL	MDL	Units	Q
95-63-6	1,2,4-Trimethylbenzene	ND	4.7	1.0	ug/kg	
108-67-8	1,3,5-Trimethylbenzene	ND	4.7	1.2	ug/kg	
127-18-4	Tetrachloroethylene	ND	4.7	0.93	ug/kg	
108-88-3	Toluene	ND	4.7	1.1	ug/kg	
79-01-6	Trichloroethylene	ND	4.7	1.1	ug/kg	
75-69-4	Trichlorofluoromethane	ND	4.7	1.9	ug/kg	
110-57-6	Trans-1,4-Dichloro-2-Butene	ND	23	4.7	ug/kg	
75-01-4	Vinyl chloride	ND	4.7	1.4	ug/kg	
108-05-4	Vinyl Acetate	ND	23	13	ug/kg	
	m,p-Xylene	ND	9.3	2.1	ug/kg	
95-47-6	o-Xylene	ND	4.7	0.93	ug/kg	

CAS No.	Surrogate Recoveries	Run# 1	Run# 2	Limits
1868-53-7	Dibromofluoromethane	124% [c]	126% [c]	80-121%
2037-26-5	Toluene-D8	78%	72%	71-130%
460-00-4	4-Bromofluorobenzene	97%	100%	59-148%
17060-07-0	1,2-Dichloroethane-D4	120%	125% [d]	77-123%

(a) Confirmation run for surrogate recoveries.
(b) ICV outside of control limits. Suspected laboratory contaminant.
(c) Outside control limits. Confirmed by reanalysis.
(d) Outside control limits.

ND = Not detected MDL - Method Detection Limit
RL = Reporting Limit
E = Indicates value exceeds calibration range

J = Indicates an estimated value
B = Indicates analyte found in associated method blank
N = Indicates presumptive evidence of a compound

Report of Analysis

Client Sample ID:	SS39-DPT-14C		
Lab Sample ID:	F78009-30	**Date Sampled:**	11/11/10
Matrix:	SO - Soil	**Date Received:**	11/12/10
Method:	SW846 8015C	**Percent Solids:**	89.1
Project:	Holloman AFB; Alamogordo, NM		

	File ID	DF	Analyzed	By	Prep Date	Prep Batch	Analytical Batch
Run #1	QR056904.D	1	11/20/10	AH	n/a	n/a	GQR2474
Run #2							

	Initial Weight	Final Volume	Methanol Aliquot
Run #1	6.62 g	5.0 ml	100 ul
Run #2			

CAS No.	Compound	Result	RL	MDL	Units	Q
	TPH-GRO (C6-C10)	ND	4.9	2.4	mg/kg	

CAS No.	Surrogate Recoveries	Run# 1	Run# 2	Limits
460-00-4	4-Bromofluorobenzene	81%		56-136%
98-08-8	aaa-Trifluorotoluene	75%		61-121%

ND = Not detected MDL - Method Detection Limit
RL = Reporting Limit
E = Indicates value exceeds calibration range

J = Indicates an estimated value
B = Indicates analyte found in associated method blank
N = Indicates presumptive evidence of a compound

Report of Analysis

Client Sample ID:	SS39-DPT-DUP01		
Lab Sample ID:	F78009-31	**Date Sampled:**	11/11/10
Matrix:	SO - Soil	**Date Received:**	11/12/10
Method:	SW846 8260B	**Percent Solids:**	92.2
Project:	Holloman AFB; Alamogordo, NM		

	File ID	DF	Analyzed	By	Prep Date	Prep Batch	Analytical Batch
Run #1	H066234.D	1	11/20/10	MM	n/a	n/a	VH2465
Run #2 [a]	H066194.D	1	11/19/10	MM	n/a	n/a	VH2464

	Initial Weight
Run #1	4.99 g
Run #2	6.77 g

VOA Special List

CAS No.	Compound	Result	RL	MDL	Units	Q
67-64-1	Acetone	ND	54	22	ug/kg	
75-05-8	Acetonitrile	ND	54	20	ug/kg	
107-02-8	Acrolein	ND	27	12	ug/kg	
107-13-1	Acrylonitrile	ND	27	12	ug/kg	
107-05-1	Allyl chloride	ND	27	5.4	ug/kg	
71-43-2	Benzene	ND	5.4	1.6	ug/kg	
100-44-7	Benzyl Chloride	ND	5.4	1.6	ug/kg	
108-86-1	Bromobenzene	ND	5.4	1.5	ug/kg	
74-97-5	Bromochloromethane	ND	5.4	1.5	ug/kg	
75-27-4	Bromodichloromethane	ND	5.4	1.2	ug/kg	
75-25-2	Bromoform	ND	5.4	1.6	ug/kg	
104-51-8	n-Butylbenzene	ND	5.4	1.4	ug/kg	
135-98-8	sec-Butylbenzene	ND	5.4	1.7	ug/kg	
98-06-6	tert-Butylbenzene	ND	5.4	1.3	ug/kg	
108-90-7	Chlorobenzene	ND	5.4	1.1	ug/kg	
75-00-3	Chloroethane	ND	5.4	2.2	ug/kg	
67-66-3	Chloroform	ND	5.4	1.3	ug/kg	
544-10-5	1-Chlorohexane	ND	5.4	1.5	ug/kg	
95-49-8	o-Chlorotoluene	ND	5.4	1.3	ug/kg	
106-43-4	p-Chlorotoluene	ND	5.4	1.3	ug/kg	
110-75-8	2-Chloroethyl vinyl ether	ND	27	11	ug/kg	
75-15-0	Carbon disulfide	ND	5.4	2.2	ug/kg	
56-23-5	Carbon tetrachloride	ND	5.4	2.0	ug/kg	
75-34-3	1,1-Dichloroethane	ND	5.4	1.2	ug/kg	
75-35-4	1,1-Dichloroethylene	ND	5.4	1.5	ug/kg	
563-58-6	1,1-Dichloropropene	ND	5.4	1.4	ug/kg	
96-12-8	1,2-Dibromo-3-chloropropane	ND	5.4	2.5	ug/kg	
106-93-4	1,2-Dibromoethane	ND	5.4	1.1	ug/kg	
107-06-2	1,2-Dichloroethane	ND	5.4	1.1	ug/kg	
78-87-5	1,2-Dichloropropane	ND	5.4	1.3	ug/kg	
142-28-9	1,3-Dichloropropane	ND	5.4	1.1	ug/kg	
594-20-7	2,2-Dichloropropane	ND	5.4	1.5	ug/kg	

ND = Not detected MDL - Method Detection Limit
RL = Reporting Limit
E = Indicates value exceeds calibration range

J = Indicates an estimated value
B = Indicates analyte found in associated method blank
N = Indicates presumptive evidence of a compound

Report of Analysis

Client Sample ID:	SS39-DPT-DUP01		
Lab Sample ID:	F78009-31	**Date Sampled:**	11/11/10
Matrix:	SO - Soil	**Date Received:**	11/12/10
Method:	SW846 8260B	**Percent Solids:**	92.2
Project:	Holloman AFB; Alamogordo, NM		

VOA Special List

CAS No.	Compound	Result	RL	MDL	Units	Q
124-48-1	Dibromochloromethane	ND	5.4	1.1	ug/kg	
75-71-8	Dichlorodifluoromethane	ND	5.4	1.6	ug/kg	
156-59-2	cis-1,2-Dichloroethylene	ND	5.4	1.6	ug/kg	
10061-01-5	cis-1,3-Dichloropropene	ND	5.4	1.1	ug/kg	
1476-11-5	cis-1,4-Dichloro-2-Butene	ND	27	5.4	ug/kg	
541-73-1	m-Dichlorobenzene	ND	5.4	1.3	ug/kg	
95-50-1	o-Dichlorobenzene	ND	5.4	1.2	ug/kg	
106-46-7	p-Dichlorobenzene	ND	5.4	1.2	ug/kg	
156-60-5	trans-1,2-Dichloroethylene	ND	5.4	1.6	ug/kg	
10061-02-6	trans-1,3-Dichloropropene	ND	5.4	1.2	ug/kg	
100-41-4	Ethylbenzene	ND	5.4	1.1	ug/kg	
97-63-2	Ethyl methacrylate	ND	27	5.4	ug/kg	
76-13-1	Freon 113	ND	5.4	1.8	ug/kg	
591-78-6	2-Hexanone	ND	27	5.9	ug/kg	
87-68-3	Hexachlorobutadiene	ND	5.4	2.2	ug/kg	
110-54-3	Hexane	ND	5.4	2.1	ug/kg	
98-82-8	Isopropylbenzene	ND	5.4	1.2	ug/kg	
99-87-6	p-Isopropyltoluene	ND	5.4	1.3	ug/kg	
108-10-1	4-Methyl-2-pentanone	ND	27	6.0	ug/kg	
126-98-7	Methacrylonitrile	ND	27	10	ug/kg	
74-83-9	Methyl bromide	ND	5.4	2.2	ug/kg	
74-87-3	Methyl chloride	ND	5.4	2.2	ug/kg	
74-88-4	Methyl iodide	ND	11	1.2	ug/kg	
80-62-6	Methyl methacrylate	ND	5.4	2.0	ug/kg	
74-95-3	Methylene bromide	ND	5.4	1.6	ug/kg	
75-09-2	Methylene chloride	ND	11	5.0	ug/kg	
78-93-3	Methyl ethyl ketone	ND	27	6.6	ug/kg	
1634-04-4	Methyl Tert Butyl Ether	ND	5.4	2.2	ug/kg	
91-20-3	Naphthalene	ND	5.4	2.2	ug/kg	
76-01-7	Pentachloroethane	ND	27	5.4	ug/kg	
107-12-0	Propionitrile	ND	54	17	ug/kg	
103-65-1	n-Propylbenzene	ND	5.4	1.5	ug/kg	
100-42-5	Styrene	ND	5.4	2.8	ug/kg	
630-20-6	1,1,1,2-Tetrachloroethane	ND	5.4	1.1	ug/kg	
71-55-6	1,1,1-Trichloroethane	ND	5.4	1.2	ug/kg	
79-34-5	1,1,2,2-Tetrachloroethane	ND	5.4	1.3	ug/kg	
79-00-5	1,1,2-Trichloroethane	ND	5.4	1.2	ug/kg	
87-61-6	1,2,3-Trichlorobenzene	ND	5.4	1.1	ug/kg	
96-18-4	1,2,3-Trichloropropane	ND	5.4	1.8	ug/kg	
120-82-1	1,2,4-Trichlorobenzene	ND	5.4	1.3	ug/kg	

ND = Not detected MDL - Method Detection Limit
RL = Reporting Limit
E = Indicates value exceeds calibration range

J = Indicates an estimated value
B = Indicates analyte found in associated method blank
N = Indicates presumptive evidence of a compound

Report of Analysis

Client Sample ID:	SS39-DPT-DUP01		
Lab Sample ID:	F78009-31	**Date Sampled:**	11/11/10
Matrix:	SO - Soil	**Date Received:**	11/12/10
Method:	SW846 8260B	**Percent Solids:**	92.2
Project:	Holloman AFB; Alamogordo, NM		

VOA Special List

CAS No.	Compound	Result	RL	MDL	Units	Q
95-63-6	1,2,4-Trimethylbenzene	ND	5.4	1.2	ug/kg	
108-67-8	1,3,5-Trimethylbenzene	ND	5.4	1.4	ug/kg	
127-18-4	Tetrachloroethylene	ND	5.4	1.1	ug/kg	
108-88-3	Toluene	ND	5.4	1.3	ug/kg	
79-01-6	Trichloroethylene	ND	5.4	1.3	ug/kg	
75-69-4	Trichlorofluoromethane	ND	5.4	2.2	ug/kg	
110-57-6	Trans-1,4-Dichloro-2-Butene	ND	27	5.4	ug/kg	
75-01-4	Vinyl chloride	ND	5.4	1.6	ug/kg	
108-05-4	Vinyl Acetate	ND	27	15	ug/kg	
	m,p-Xylene	ND	11	2.4	ug/kg	
95-47-6	o-Xylene	ND	5.4	1.1	ug/kg	

CAS No.	Surrogate Recoveries	Run# 1	Run# 2	Limits
1868-53-7	Dibromofluoromethane	131% [b]	127% [b]	80-121%
2037-26-5	Toluene-D8	76%	72%	71-130%
460-00-4	4-Bromofluorobenzene	101%	100%	59-148%
17060-07-0	1,2-Dichloroethane-D4	122%	129% [c]	77-123%

(a) Confirmation run for surrogate recoveries.
(b) Outside control limits. Confirmed by reanalysis.
(c) Outside control limits.

ND = Not detected MDL - Method Detection Limit
RL = Reporting Limit
E = Indicates value exceeds calibration range

J = Indicates an estimated value
B = Indicates analyte found in associated method blank
N = Indicates presumptive evidence of a compound

Report of Analysis

Client Sample ID:	SS39-DPT-DUP01		
Lab Sample ID:	F78009-31	**Date Sampled:**	11/11/10
Matrix:	SO - Soil	**Date Received:**	11/12/10
Method:	SW846 8015C	**Percent Solids:**	92.2
Project:	Holloman AFB; Alamogordo, NM		

	File ID	DF	Analyzed	By	Prep Date	Prep Batch	Analytical Batch
Run #1	QR056913.D	1	11/20/10	AH	n/a	n/a	GQR2475
Run #2							

	Initial Weight	Final Volume	Methanol Aliquot
Run #1	6.56 g	5.0 ml	100 ul
Run #2			

CAS No.	Compound	Result	RL	MDL	Units	Q
	TPH-GRO (C6-C10)	ND	4.6	2.3	mg/kg	

CAS No.	Surrogate Recoveries	Run# 1	Run# 2	Limits
460-00-4	4-Bromofluorobenzene	81%		56-136%
98-08-8	aaa-Trifluorotoluene	73%		61-121%

ND = Not detected MDL - Method Detection Limit
RL = Reporting Limit
E = Indicates value exceeds calibration range

J = Indicates an estimated value
B = Indicates analyte found in associated method blank
N = Indicates presumptive evidence of a compound

Report of Analysis

Client Sample ID:	SS39-DPT-DUP02		
Lab Sample ID:	F78009-32	**Date Sampled:**	11/11/10
Matrix:	SO - Soil	**Date Received:**	11/12/10
Method:	SW846 8260B	**Percent Solids:**	90.3
Project:	Holloman AFB; Alamogordo, NM		

	File ID	DF	Analyzed	By	Prep Date	Prep Batch	Analytical Batch
Run #1	H066235.D	1	11/20/10	MM	n/a	n/a	VH2465
Run #2 [a]	H066195.D	1	11/19/10	MM	n/a	n/a	VH2464

	Initial Weight
Run #1	6.15 g
Run #2	6.72 g

VOA Special List

CAS No.	Compound	Result	RL	MDL	Units	Q
67-64-1	Acetone	ND	45	18	ug/kg	
75-05-8	Acetonitrile	ND	45	16	ug/kg	
107-02-8	Acrolein	ND	23	9.9	ug/kg	
107-13-1	Acrylonitrile	ND	23	10	ug/kg	
107-05-1	Allyl chloride	ND	23	4.5	ug/kg	
71-43-2	Benzene	ND	4.5	1.4	ug/kg	
100-44-7	Benzyl Chloride	ND	4.5	1.4	ug/kg	
108-86-1	Bromobenzene	ND	4.5	1.3	ug/kg	
74-97-5	Bromochloromethane	ND	4.5	1.3	ug/kg	
75-27-4	Bromodichloromethane	ND	4.5	0.99	ug/kg	
75-25-2	Bromoform	ND	4.5	1.4	ug/kg	
104-51-8	n-Butylbenzene	ND	4.5	1.2	ug/kg	
135-98-8	sec-Butylbenzene	ND	4.5	1.4	ug/kg	
98-06-6	tert-Butylbenzene	ND	4.5	1.1	ug/kg	
108-90-7	Chlorobenzene	ND	4.5	0.90	ug/kg	
75-00-3	Chloroethane	ND	4.5	1.8	ug/kg	
67-66-3	Chloroform	ND	4.5	1.1	ug/kg	
544-10-5	1-Chlorohexane	ND	4.5	1.3	ug/kg	
95-49-8	o-Chlorotoluene	ND	4.5	1.1	ug/kg	
106-43-4	p-Chlorotoluene	ND	4.5	1.1	ug/kg	
110-75-8	2-Chloroethyl vinyl ether	ND	23	9.0	ug/kg	
75-15-0	Carbon disulfide	ND	4.5	1.8	ug/kg	
56-23-5	Carbon tetrachloride	ND	4.5	1.6	ug/kg	
75-34-3	1,1-Dichloroethane	ND	4.5	0.99	ug/kg	
75-35-4	1,1-Dichloroethylene	ND	4.5	1.3	ug/kg	
563-58-6	1,1-Dichloropropene	ND	4.5	1.2	ug/kg	
96-12-8	1,2-Dibromo-3-chloropropane	ND	4.5	2.1	ug/kg	
106-93-4	1,2-Dibromoethane	ND	4.5	0.90	ug/kg	
107-06-2	1,2-Dichloroethane	ND	4.5	0.90	ug/kg	
78-87-5	1,2-Dichloropropane	ND	4.5	1.1	ug/kg	
142-28-9	1,3-Dichloropropane	ND	4.5	0.90	ug/kg	
594-20-7	2,2-Dichloropropane	ND	4.5	1.3	ug/kg	

ND = Not detected MDL - Method Detection Limit
RL = Reporting Limit
E = Indicates value exceeds calibration range

J = Indicates an estimated value
B = Indicates analyte found in associated method blank
N = Indicates presumptive evidence of a compound

Report of Analysis

Client Sample ID:	SS39-DPT-DUP02		
Lab Sample ID:	F78009-32	**Date Sampled:**	11/11/10
Matrix:	SO - Soil	**Date Received:**	11/12/10
Method:	SW846 8260B	**Percent Solids:**	90.3
Project:	Holloman AFB; Alamogordo, NM		

VOA Special List

CAS No.	Compound	Result	RL	MDL	Units	Q
124-48-1	Dibromochloromethane	ND	4.5	0.90	ug/kg	
75-71-8	Dichlorodifluoromethane	ND	4.5	1.4	ug/kg	
156-59-2	cis-1,2-Dichloroethylene	ND	4.5	1.4	ug/kg	
10061-01-5	cis-1,3-Dichloropropene	ND	4.5	0.90	ug/kg	
1476-11-5	cis-1,4-Dichloro-2-Butene	ND	23	4.5	ug/kg	
541-73-1	m-Dichlorobenzene	ND	4.5	1.1	ug/kg	
95-50-1	o-Dichlorobenzene	ND	4.5	0.99	ug/kg	
106-46-7	p-Dichlorobenzene	ND	4.5	0.99	ug/kg	
156-60-5	trans-1,2-Dichloroethylene	ND	4.5	1.4	ug/kg	
10061-02-6	trans-1,3-Dichloropropene	ND	4.5	0.99	ug/kg	
100-41-4	Ethylbenzene	ND	4.5	0.90	ug/kg	
97-63-2	Ethyl methacrylate	ND	23	4.5	ug/kg	
76-13-1	Freon 113	ND	4.5	1.5	ug/kg	
591-78-6	2-Hexanone	ND	23	4.9	ug/kg	
87-68-3	Hexachlorobutadiene	ND	4.5	1.8	ug/kg	
110-54-3	Hexane	ND	4.5	1.7	ug/kg	
98-82-8	Isopropylbenzene	ND	4.5	0.99	ug/kg	
99-87-6	p-Isopropyltoluene	ND	4.5	1.1	ug/kg	
108-10-1	4-Methyl-2-pentanone	ND	23	5.0	ug/kg	
126-98-7	Methacrylonitrile	ND	23	8.3	ug/kg	
74-83-9	Methyl bromide	ND	4.5	1.8	ug/kg	
74-87-3	Methyl chloride	ND	4.5	1.8	ug/kg	
74-88-4	Methyl iodide	ND	9.0	0.99	ug/kg	
80-62-6	Methyl methacrylate	ND	4.5	1.6	ug/kg	
74-95-3	Methylene bromide	ND	4.5	1.4	ug/kg	
75-09-2	Methylene chloride [b]	8.4	9.0	4.1	ug/kg	JB
78-93-3	Methyl ethyl ketone	ND	23	5.5	ug/kg	
1634-04-4	Methyl Tert Butyl Ether	ND	4.5	1.8	ug/kg	
91-20-3	Naphthalene	ND	4.5	1.8	ug/kg	
76-01-7	Pentachloroethane	ND	23	4.5	ug/kg	
107-12-0	Propionitrile	ND	45	14	ug/kg	
103-65-1	n-Propylbenzene	ND	4.5	1.3	ug/kg	
100-42-5	Styrene	ND	4.5	2.3	ug/kg	
630-20-6	1,1,1,2-Tetrachloroethane	ND	4.5	0.90	ug/kg	
71-55-6	1,1,1-Trichloroethane	ND	4.5	0.99	ug/kg	
79-34-5	1,1,2,2-Tetrachloroethane	ND	4.5	1.1	ug/kg	
79-00-5	1,1,2-Trichloroethane	ND	4.5	0.99	ug/kg	
87-61-6	1,2,3-Trichlorobenzene	ND	4.5	0.90	ug/kg	
96-18-4	1,2,3-Trichloropropane	ND	4.5	1.5	ug/kg	
120-82-1	1,2,4-Trichlorobenzene	ND	4.5	1.1	ug/kg	

ND = Not detected MDL - Method Detection Limit
RL = Reporting Limit
E = Indicates value exceeds calibration range

J = Indicates an estimated value
B = Indicates analyte found in associated method blank
N = Indicates presumptive evidence of a compound

Report of Analysis

Client Sample ID:	SS39-DPT-DUP02		
Lab Sample ID:	F78009-32	**Date Sampled:**	11/11/10
Matrix:	SO - Soil	**Date Received:**	11/12/10
Method:	SW846 8260B	**Percent Solids:**	90.3
Project:	Holloman AFB; Alamogordo, NM		

VOA Special List

CAS No.	Compound	Result	RL	MDL	Units	Q
95-63-6	1,2,4-Trimethylbenzene	ND	4.5	0.99	ug/kg	
108-67-8	1,3,5-Trimethylbenzene	ND	4.5	1.2	ug/kg	
127-18-4	Tetrachloroethylene	1.4	4.5	0.90	ug/kg	J
108-88-3	Toluene	ND	4.5	1.1	ug/kg	
79-01-6	Trichloroethylene	ND	4.5	1.1	ug/kg	
75-69-4	Trichlorofluoromethane	ND	4.5	1.8	ug/kg	
110-57-6	Trans-1,4-Dichloro-2-Butene	ND	23	4.5	ug/kg	
75-01-4	Vinyl chloride	ND	4.5	1.4	ug/kg	
108-05-4	Vinyl Acetate	ND	23	13	ug/kg	
	m,p-Xylene	ND	9.0	2.0	ug/kg	
95-47-6	o-Xylene	ND	4.5	0.90	ug/kg	

CAS No.	Surrogate Recoveries	Run# 1	Run# 2	Limits
1868-53-7	Dibromofluoromethane	126% c	125% c	80-121%
2037-26-5	Toluene-D8	75%	71%	71-130%
460-00-4	4-Bromofluorobenzene	102%	103%	59-148%
17060-07-0	1,2-Dichloroethane-D4	132% c	130% c	77-123%

(a) Confirmation run for surrogate recoveries.
(b) ICV outside of control limits. Suspected laboratory contaminant.
(c) Outside control limits. Confirmed by reanalysis.

ND = Not detected MDL - Method Detection Limit
RL = Reporting Limit
E = Indicates value exceeds calibration range

J = Indicates an estimated value
B = Indicates analyte found in associated method blank
N = Indicates presumptive evidence of a compound

Report of Analysis

Client Sample ID:	SS39-DPT-DUP02		
Lab Sample ID:	F78009-32	**Date Sampled:**	11/11/10
Matrix:	SO - Soil	**Date Received:**	11/12/10
Method:	SW846 8015C	**Percent Solids:**	90.3
Project:	Holloman AFB; Alamogordo, NM		

	File ID	DF	Analyzed	By	Prep Date	Prep Batch	Analytical Batch
Run #1	QR056914.D	1	11/20/10	AH	n/a	n/a	GQR2475
Run #2							

	Initial Weight	Final Volume	Methanol Aliquot
Run #1	6.05 g	5.0 ml	100 ul
Run #2			

CAS No.	Compound	Result	RL	MDL	Units	Q
	TPH-GRO (C6-C10)	ND	5.1	2.6	mg/kg	

CAS No.	Surrogate Recoveries	Run# 1	Run# 2	Limits
460-00-4	4-Bromofluorobenzene	81%		56-136%
98-08-8	aaa-Trifluorotoluene	72%		61-121%

ND = Not detected MDL - Method Detection Limit
RL = Reporting Limit
E = Indicates value exceeds calibration range

J = Indicates an estimated value
B = Indicates analyte found in associated method blank
N = Indicates presumptive evidence of a compound

Report of Analysis

Client Sample ID:	SS39-DPT-DUP03		
Lab Sample ID:	F78009-33	**Date Sampled:**	11/11/10
Matrix:	SO - Soil	**Date Received:**	11/12/10
Method:	SW846 8260B	**Percent Solids:**	95.3
Project:	Holloman AFB; Alamogordo, NM		

	File ID	DF	Analyzed	By	Prep Date	Prep Batch	Analytical Batch
Run #1	G0068602.D	1	11/19/10	MM	n/a	n/a	VG2582
Run #2							

	Initial Weight
Run #1	6.63 g
Run #2	

VOA Special List

CAS No.	Compound	Result	RL	MDL	Units	Q
67-64-1	Acetone	ND	40	16	ug/kg	
75-05-8	Acetonitrile	ND	40	14	ug/kg	
107-02-8	Acrolein	ND	20	8.7	ug/kg	
107-13-1	Acrylonitrile	ND	20	9.0	ug/kg	
107-05-1	Allyl chloride	ND	20	4.0	ug/kg	
71-43-2	Benzene	ND	4.0	1.2	ug/kg	
100-44-7	Benzyl Chloride	ND	4.0	1.2	ug/kg	
108-86-1	Bromobenzene	ND	4.0	1.1	ug/kg	
74-97-5	Bromochloromethane	ND	4.0	1.1	ug/kg	
75-27-4	Bromodichloromethane	ND	4.0	0.87	ug/kg	
75-25-2	Bromoform	ND	4.0	1.2	ug/kg	
104-51-8	n-Butylbenzene	ND	4.0	1.0	ug/kg	
135-98-8	sec-Butylbenzene	ND	4.0	1.3	ug/kg	
98-06-6	tert-Butylbenzene	ND	4.0	0.95	ug/kg	
108-90-7	Chlorobenzene	ND	4.0	0.79	ug/kg	
75-00-3	Chloroethane	ND	4.0	1.6	ug/kg	
67-66-3	Chloroform	ND	4.0	0.95	ug/kg	
544-10-5	1-Chlorohexane	ND	4.0	1.1	ug/kg	
95-49-8	o-Chlorotoluene	ND	4.0	0.95	ug/kg	
106-43-4	p-Chlorotoluene	ND	4.0	0.95	ug/kg	
110-75-8	2-Chloroethyl vinyl ether	ND	20	7.9	ug/kg	
75-15-0	Carbon disulfide	ND	4.0	1.6	ug/kg	
56-23-5	Carbon tetrachloride	ND	4.0	1.4	ug/kg	
75-34-3	1,1-Dichloroethane	ND	4.0	0.87	ug/kg	
75-35-4	1,1-Dichloroethylene	ND	4.0	1.1	ug/kg	
563-58-6	1,1-Dichloropropene	ND	4.0	1.0	ug/kg	
96-12-8	1,2-Dibromo-3-chloropropane	ND	4.0	1.8	ug/kg	
106-93-4	1,2-Dibromoethane	ND	4.0	0.79	ug/kg	
107-06-2	1,2-Dichloroethane	ND	4.0	0.79	ug/kg	
78-87-5	1,2-Dichloropropane	ND	4.0	0.95	ug/kg	
142-28-9	1,3-Dichloropropane	ND	4.0	0.79	ug/kg	
594-20-7	2,2-Dichloropropane	ND	4.0	1.1	ug/kg	

ND = Not detected MDL - Method Detection Limit
RL = Reporting Limit
E = Indicates value exceeds calibration range

J = Indicates an estimated value
B = Indicates analyte found in associated method blank
N = Indicates presumptive evidence of a compound

Report of Analysis

Client Sample ID:	SS39-DPT-DUP03		
Lab Sample ID:	F78009-33	**Date Sampled:**	11/11/10
Matrix:	SO - Soil	**Date Received:**	11/12/10
Method:	SW846 8260B	**Percent Solids:**	95.3
Project:	Holloman AFB; Alamogordo, NM		

VOA Special List

CAS No.	Compound	Result	RL	MDL	Units	Q
124-48-1	Dibromochloromethane	ND	4.0	0.79	ug/kg	
75-71-8	Dichlorodifluoromethane	ND	4.0	1.2	ug/kg	
156-59-2	cis-1,2-Dichloroethylene	ND	4.0	1.2	ug/kg	
10061-01-5	cis-1,3-Dichloropropene	ND	4.0	0.79	ug/kg	
1476-11-5	cis-1,4-Dichloro-2-Butene	ND	20	4.0	ug/kg	
541-73-1	m-Dichlorobenzene	ND	4.0	0.95	ug/kg	
95-50-1	o-Dichlorobenzene	ND	4.0	0.87	ug/kg	
106-46-7	p-Dichlorobenzene	ND	4.0	0.87	ug/kg	
156-60-5	trans-1,2-Dichloroethylene	ND	4.0	1.2	ug/kg	
10061-02-6	trans-1,3-Dichloropropene	ND	4.0	0.87	ug/kg	
100-41-4	Ethylbenzene	ND	4.0	0.79	ug/kg	
97-63-2	Ethyl methacrylate	ND	20	4.0	ug/kg	
76-13-1	Freon 113	ND	4.0	1.3	ug/kg	
591-78-6	2-Hexanone	ND	20	4.3	ug/kg	
87-68-3	Hexachlorobutadiene	ND	4.0	1.6	ug/kg	
110-54-3	Hexane	ND	4.0	1.5	ug/kg	
98-82-8	Isopropylbenzene	ND	4.0	0.87	ug/kg	
99-87-6	p-Isopropyltoluene	ND	4.0	0.95	ug/kg	
108-10-1	4-Methyl-2-pentanone	ND	20	4.4	ug/kg	
126-98-7	Methacrylonitrile	ND	20	7.3	ug/kg	
74-83-9	Methyl bromide	ND	4.0	1.6	ug/kg	
74-87-3	Methyl chloride	ND	4.0	1.6	ug/kg	
74-88-4	Methyl iodide	ND	7.9	0.87	ug/kg	
80-62-6	Methyl methacrylate	ND	4.0	1.4	ug/kg	
74-95-3	Methylene bromide	ND	4.0	1.2	ug/kg	
75-09-2	Methylene chloride [a]	13.2	7.9	3.6	ug/kg	B
78-93-3	Methyl ethyl ketone	ND	20	4.8	ug/kg	
1634-04-4	Methyl Tert Butyl Ether	ND	4.0	1.6	ug/kg	
91-20-3	Naphthalene	ND	4.0	1.6	ug/kg	
76-01-7	Pentachloroethane	ND	20	4.0	ug/kg	
107-12-0	Propionitrile	ND	40	13	ug/kg	
103-65-1	n-Propylbenzene	ND	4.0	1.1	ug/kg	
100-42-5	Styrene	ND	4.0	2.1	ug/kg	
630-20-6	1,1,1,2-Tetrachloroethane	ND	4.0	0.79	ug/kg	
71-55-6	1,1,1-Trichloroethane	ND	4.0	0.87	ug/kg	
79-34-5	1,1,2,2-Tetrachloroethane	ND	4.0	0.95	ug/kg	
79-00-5	1,1,2-Trichloroethane	ND	4.0	0.87	ug/kg	
87-61-6	1,2,3-Trichlorobenzene	ND	4.0	0.79	ug/kg	
96-18-4	1,2,3-Trichloropropane	ND	4.0	1.3	ug/kg	
120-82-1	1,2,4-Trichlorobenzene	ND	4.0	0.95	ug/kg	

ND = Not detected MDL - Method Detection Limit
RL = Reporting Limit
E = Indicates value exceeds calibration range

J = Indicates an estimated value
B = Indicates analyte found in associated method blank
N = Indicates presumptive evidence of a compound

Report of Analysis

Client Sample ID:	SS39-DPT-DUP03		
Lab Sample ID:	F78009-33	**Date Sampled:**	11/11/10
Matrix:	SO - Soil	**Date Received:**	11/12/10
Method:	SW846 8260B	**Percent Solids:**	95.3
Project:	Holloman AFB; Alamogordo, NM		

VOA Special List

CAS No.	Compound	Result	RL	MDL	Units	Q
95-63-6	1,2,4-Trimethylbenzene	ND	4.0	0.87	ug/kg	
108-67-8	1,3,5-Trimethylbenzene	ND	4.0	1.0	ug/kg	
127-18-4	Tetrachloroethylene	ND	4.0	0.79	ug/kg	
108-88-3	Toluene	ND	4.0	0.95	ug/kg	
79-01-6	Trichloroethylene	ND	4.0	0.95	ug/kg	
75-69-4	Trichlorofluoromethane	ND	4.0	1.6	ug/kg	
110-57-6	Trans-1,4-Dichloro-2-Butene	ND	20	4.0	ug/kg	
75-01-4	Vinyl chloride	ND	4.0	1.2	ug/kg	
108-05-4	Vinyl Acetate	ND	20	11	ug/kg	
	m,p-Xylene	ND	7.9	1.7	ug/kg	
95-47-6	o-Xylene	ND	4.0	0.79	ug/kg	

CAS No.	Surrogate Recoveries	Run# 1	Run# 2	Limits
1868-53-7	Dibromofluoromethane	113%		80-121%
2037-26-5	Toluene-D8	90%		71-130%
460-00-4	4-Bromofluorobenzene	91%		59-148%
17060-07-0	1,2-Dichloroethane-D4	117%		77-123%

(a) Suspected laboratory contaminant.

ND = Not detected MDL - Method Detection Limit
RL = Reporting Limit
E = Indicates value exceeds calibration range

J = Indicates an estimated value
B = Indicates analyte found in associated method blank
N = Indicates presumptive evidence of a compound

Report of Analysis

Client Sample ID:	SS39-DPT-DUP03		
Lab Sample ID:	F78009-33	**Date Sampled:**	11/11/10
Matrix:	SO - Soil	**Date Received:**	11/12/10
Method:	SW846 8015C	**Percent Solids:**	95.3
Project:	Holloman AFB; Alamogordo, NM		

	File ID	DF	Analyzed	By	Prep Date	Prep Batch	Analytical Batch
Run #1	QR056915.D	1	11/20/10	AH	n/a	n/a	GQR2475
Run #2							

	Initial Weight	Final Volume	Methanol Aliquot
Run #1	5.69 g	5.0 ml	100 ul
Run #2			

CAS No.	Compound	Result	RL	MDL	Units	Q
	TPH-GRO (C6-C10)	ND	4.9	2.4	mg/kg	

CAS No.	Surrogate Recoveries	Run# 1	Run# 2	Limits
460-00-4	4-Bromofluorobenzene	80%		56-136%
98-08-8	aaa-Trifluorotoluene	72%		61-121%

ND = Not detected MDL - Method Detection Limit
RL = Reporting Limit
E = Indicates value exceeds calibration range

J = Indicates an estimated value
B = Indicates analyte found in associated method blank
N = Indicates presumptive evidence of a compound

Report of Analysis

Client Sample ID:	SS39-TB-11112010-A		
Lab Sample ID:	F78009-34	**Date Sampled:**	11/11/10
Matrix:	SO - Trip Blank Soil	**Date Received:**	11/12/10
Method:	SW846 8260B	**Percent Solids:**	n/a
Project:	Holloman AFB; Alamogordo, NM		

	File ID	DF	Analyzed	By	Prep Date	Prep Batch	Analytical Batch
Run #1	G0068603.D	1	11/19/10	MM	n/a	n/a	VG2582
Run #2							

	Initial Weight
Run #1	5.00 g
Run #2	

VOA Special List

CAS No.	Compound	Result	RL	MDL	Units	Q
67-64-1	Acetone	ND	50	20	ug/kg	
75-05-8	Acetonitrile	ND	50	18	ug/kg	
107-02-8	Acrolein	ND	25	11	ug/kg	
107-13-1	Acrylonitrile	ND	25	11	ug/kg	
107-05-1	Allyl chloride	ND	25	5.0	ug/kg	
71-43-2	Benzene	ND	5.0	1.5	ug/kg	
100-44-7	Benzyl Chloride	ND	5.0	1.5	ug/kg	
108-86-1	Bromobenzene	ND	5.0	1.4	ug/kg	
74-97-5	Bromochloromethane	ND	5.0	1.4	ug/kg	
75-27-4	Bromodichloromethane	ND	5.0	1.1	ug/kg	
75-25-2	Bromoform	ND	5.0	1.5	ug/kg	
104-51-8	n-Butylbenzene	ND	5.0	1.3	ug/kg	
135-98-8	sec-Butylbenzene	ND	5.0	1.6	ug/kg	
98-06-6	tert-Butylbenzene	ND	5.0	1.2	ug/kg	
108-90-7	Chlorobenzene	ND	5.0	1.0	ug/kg	
75-00-3	Chloroethane	ND	5.0	2.0	ug/kg	
67-66-3	Chloroform	ND	5.0	1.2	ug/kg	
544-10-5	1-Chlorohexane	ND	5.0	1.4	ug/kg	
95-49-8	o-Chlorotoluene	ND	5.0	1.2	ug/kg	
106-43-4	p-Chlorotoluene	ND	5.0	1.2	ug/kg	
110-75-8	2-Chloroethyl vinyl ether	ND	25	10	ug/kg	
75-15-0	Carbon disulfide	ND	5.0	2.0	ug/kg	
56-23-5	Carbon tetrachloride	ND	5.0	1.8	ug/kg	
75-34-3	1,1-Dichloroethane	ND	5.0	1.1	ug/kg	
75-35-4	1,1-Dichloroethylene	ND	5.0	1.4	ug/kg	
563-58-6	1,1-Dichloropropene	ND	5.0	1.3	ug/kg	
96-12-8	1,2-Dibromo-3-chloropropane	ND	5.0	2.3	ug/kg	
106-93-4	1,2-Dibromoethane	ND	5.0	1.0	ug/kg	
107-06-2	1,2-Dichloroethane	ND	5.0	1.0	ug/kg	
78-87-5	1,2-Dichloropropane	ND	5.0	1.2	ug/kg	
142-28-9	1,3-Dichloropropane	ND	5.0	1.0	ug/kg	
594-20-7	2,2-Dichloropropane	ND	5.0	1.4	ug/kg	

ND = Not detected MDL - Method Detection Limit
RL = Reporting Limit
E = Indicates value exceeds calibration range

J = Indicates an estimated value
B = Indicates analyte found in associated method blank
N = Indicates presumptive evidence of a compound

Report of Analysis

Client Sample ID:	SS39-TB-11112010-A		
Lab Sample ID:	F78009-34	**Date Sampled:**	11/11/10
Matrix:	SO - Trip Blank Soil	**Date Received:**	11/12/10
Method:	SW846 8260B	**Percent Solids:**	n/a
Project:	Holloman AFB; Alamogordo, NM		

VOA Special List

CAS No.	Compound	Result	RL	MDL	Units	Q
124-48-1	Dibromochloromethane	ND	5.0	1.0	ug/kg	
75-71-8	Dichlorodifluoromethane	ND	5.0	1.5	ug/kg	
156-59-2	cis-1,2-Dichloroethylene	ND	5.0	1.5	ug/kg	
10061-01-5	cis-1,3-Dichloropropene	ND	5.0	1.0	ug/kg	
1476-11-5	cis-1,4-Dichloro-2-Butene	ND	25	5.0	ug/kg	
541-73-1	m-Dichlorobenzene	ND	5.0	1.2	ug/kg	
95-50-1	o-Dichlorobenzene	ND	5.0	1.1	ug/kg	
106-46-7	p-Dichlorobenzene	ND	5.0	1.1	ug/kg	
156-60-5	trans-1,2-Dichloroethylene	ND	5.0	1.5	ug/kg	
10061-02-6	trans-1,3-Dichloropropene	ND	5.0	1.1	ug/kg	
100-41-4	Ethylbenzene	ND	5.0	1.0	ug/kg	
97-63-2	Ethyl methacrylate	ND	25	5.0	ug/kg	
76-13-1	Freon 113	ND	5.0	1.7	ug/kg	
591-78-6	2-Hexanone	ND	25	5.4	ug/kg	
87-68-3	Hexachlorobutadiene	ND	5.0	2.0	ug/kg	
110-54-3	Hexane	ND	5.0	1.9	ug/kg	
98-82-8	Isopropylbenzene	ND	5.0	1.1	ug/kg	
99-87-6	p-Isopropyltoluene	ND	5.0	1.2	ug/kg	
108-10-1	4-Methyl-2-pentanone	ND	25	5.5	ug/kg	
126-98-7	Methacrylonitrile	ND	25	9.2	ug/kg	
74-83-9	Methyl bromide	ND	5.0	2.0	ug/kg	
74-87-3	Methyl chloride	ND	5.0	2.0	ug/kg	
74-88-4	Methyl iodide	ND	10	1.1	ug/kg	
80-62-6	Methyl methacrylate	ND	5.0	1.8	ug/kg	
74-95-3	Methylene bromide	ND	5.0	1.5	ug/kg	
75-09-2	Methylene chloride	ND	10	4.6	ug/kg	
78-93-3	Methyl ethyl ketone	ND	25	6.1	ug/kg	
1634-04-4	Methyl Tert Butyl Ether	ND	5.0	2.0	ug/kg	
91-20-3	Naphthalene	ND	5.0	2.0	ug/kg	
76-01-7	Pentachloroethane	ND	25	5.0	ug/kg	
107-12-0	Propionitrile	ND	50	16	ug/kg	
103-65-1	n-Propylbenzene	ND	5.0	1.4	ug/kg	
100-42-5	Styrene	ND	5.0	2.6	ug/kg	
630-20-6	1,1,1,2-Tetrachloroethane	ND	5.0	1.0	ug/kg	
71-55-6	1,1,1-Trichloroethane	ND	5.0	1.1	ug/kg	
79-34-5	1,1,2,2-Tetrachloroethane	ND	5.0	1.2	ug/kg	
79-00-5	1,1,2-Trichloroethane	ND	5.0	1.1	ug/kg	
87-61-6	1,2,3-Trichlorobenzene	ND	5.0	1.0	ug/kg	
96-18-4	1,2,3-Trichloropropane	ND	5.0	1.7	ug/kg	
120-82-1	1,2,4-Trichlorobenzene	ND	5.0	1.2	ug/kg	

ND = Not detected MDL - Method Detection Limit
RL = Reporting Limit
E = Indicates value exceeds calibration range

J = Indicates an estimated value
B = Indicates analyte found in associated method blank
N = Indicates presumptive evidence of a compound

Report of Analysis

Client Sample ID:	SS39-TB-11112010-A		
Lab Sample ID:	F78009-34	**Date Sampled:**	11/11/10
Matrix:	SO - Trip Blank Soil	**Date Received:**	11/12/10
Method:	SW846 8260B	**Percent Solids:**	n/a
Project:	Holloman AFB; Alamogordo, NM		

VOA Special List

CAS No.	Compound	Result	RL	MDL	Units	Q
95-63-6	1,2,4-Trimethylbenzene	ND	5.0	1.1	ug/kg	
108-67-8	1,3,5-Trimethylbenzene	ND	5.0	1.3	ug/kg	
127-18-4	Tetrachloroethylene	ND	5.0	1.0	ug/kg	
108-88-3	Toluene	ND	5.0	1.2	ug/kg	
79-01-6	Trichloroethylene	ND	5.0	1.2	ug/kg	
75-69-4	Trichlorofluoromethane	ND	5.0	2.0	ug/kg	
110-57-6	Trans-1,4-Dichloro-2-Butene	ND	25	5.0	ug/kg	
75-01-4	Vinyl chloride	ND	5.0	1.5	ug/kg	
108-05-4	Vinyl Acetate	ND	25	14	ug/kg	
	m,p-Xylene	ND	10	2.2	ug/kg	
95-47-6	o-Xylene	ND	5.0	1.0	ug/kg	

CAS No.	Surrogate Recoveries	Run# 1	Run# 2	Limits
1868-53-7	Dibromofluoromethane	106%		80-121%
2037-26-5	Toluene-D8	91%		71-130%
460-00-4	4-Bromofluorobenzene	96%		59-148%
17060-07-0	1,2-Dichloroethane-D4	111%		77-123%

ND = Not detected MDL - Method Detection Limit
RL = Reporting Limit
E = Indicates value exceeds calibration range

J = Indicates an estimated value
B = Indicates analyte found in associated method blank
N = Indicates presumptive evidence of a compound

Report of Analysis

Client Sample ID:	SS39-TB-11112010-A		
Lab Sample ID:	F78009-34	**Date Sampled:**	11/11/10
Matrix:	SO - Trip Blank Soil	**Date Received:**	11/12/10
Method:	SW846 8015C	**Percent Solids:**	n/a
Project:	Holloman AFB; Alamogordo, NM		

	File ID	DF	Analyzed	By	Prep Date	Prep Batch	Analytical Batch
Run #1	QR056916.D	1	11/20/10	AH	n/a	n/a	GQR2475
Run #2							

	Initial Weight	Final Volume	Methanol Aliquot
Run #1	5.00 g	5.0 ml	100 ul
Run #2			

CAS No.	Compound	Result	RL	MDL	Units	Q
	TPH-GRO (C6-C10)	ND	5.0	2.5	mg/kg	

CAS No.	Surrogate Recoveries	Run# 1	Run# 2	Limits
460-00-4	4-Bromofluorobenzene	81%		56-136%
98-08-8	aaa-Trifluorotoluene	71%		61-121%

ND = Not detected MDL - Method Detection Limit
RL = Reporting Limit
E = Indicates value exceeds calibration range

J = Indicates an estimated value
B = Indicates analyte found in associated method blank
N = Indicates presumptive evidence of a compound

Report of Analysis

Client Sample ID:	SS39-TB-11112010-B		
Lab Sample ID:	F78009-35	**Date Sampled:**	11/11/10
Matrix:	SO - Trip Blank Soil	**Date Received:**	11/12/10
Method:	SW846 8260B	**Percent Solids:**	n/a
Project:	Holloman AFB; Alamogordo, NM		

	File ID	DF	Analyzed	By	Prep Date	Prep Batch	Analytical Batch
Run #1	G0068604.D	1	11/19/10	MM	n/a	n/a	VG2582
Run #2							

	Initial Weight
Run #1	5.00 g
Run #2	

VOA Special List

CAS No.	Compound	Result	RL	MDL	Units	Q
67-64-1	Acetone	ND	50	20	ug/kg	
75-05-8	Acetonitrile	ND	50	18	ug/kg	
107-02-8	Acrolein	ND	25	11	ug/kg	
107-13-1	Acrylonitrile	ND	25	11	ug/kg	
107-05-1	Allyl chloride	ND	25	5.0	ug/kg	
71-43-2	Benzene	ND	5.0	1.5	ug/kg	
100-44-7	Benzyl Chloride	ND	5.0	1.5	ug/kg	
108-86-1	Bromobenzene	ND	5.0	1.4	ug/kg	
74-97-5	Bromochloromethane	ND	5.0	1.4	ug/kg	
75-27-4	Bromodichloromethane	ND	5.0	1.1	ug/kg	
75-25-2	Bromoform	ND	5.0	1.5	ug/kg	
104-51-8	n-Butylbenzene	ND	5.0	1.3	ug/kg	
135-98-8	sec-Butylbenzene	ND	5.0	1.6	ug/kg	
98-06-6	tert-Butylbenzene	ND	5.0	1.2	ug/kg	
108-90-7	Chlorobenzene	ND	5.0	1.0	ug/kg	
75-00-3	Chloroethane	ND	5.0	2.0	ug/kg	
67-66-3	Chloroform	ND	5.0	1.2	ug/kg	
544-10-5	1-Chlorohexane	ND	5.0	1.4	ug/kg	
95-49-8	o-Chlorotoluene	ND	5.0	1.2	ug/kg	
106-43-4	p-Chlorotoluene	ND	5.0	1.2	ug/kg	
110-75-8	2-Chloroethyl vinyl ether	ND	25	10	ug/kg	
75-15-0	Carbon disulfide	ND	5.0	2.0	ug/kg	
56-23-5	Carbon tetrachloride	ND	5.0	1.8	ug/kg	
75-34-3	1,1-Dichloroethane	ND	5.0	1.1	ug/kg	
75-35-4	1,1-Dichloroethylene	ND	5.0	1.4	ug/kg	
563-58-6	1,1-Dichloropropene	ND	5.0	1.3	ug/kg	
96-12-8	1,2-Dibromo-3-chloropropane	ND	5.0	2.3	ug/kg	
106-93-4	1,2-Dibromoethane	ND	5.0	1.0	ug/kg	
107-06-2	1,2-Dichloroethane	ND	5.0	1.0	ug/kg	
78-87-5	1,2-Dichloropropane	ND	5.0	1.2	ug/kg	
142-28-9	1,3-Dichloropropane	ND	5.0	1.0	ug/kg	
594-20-7	2,2-Dichloropropane	ND	5.0	1.4	ug/kg	

ND = Not detected MDL - Method Detection Limit
RL = Reporting Limit
E = Indicates value exceeds calibration range

J = Indicates an estimated value
B = Indicates analyte found in associated method blank
N = Indicates presumptive evidence of a compound

Report of Analysis

Client Sample ID:	SS39-TB-11112010-B		
Lab Sample ID:	F78009-35	**Date Sampled:**	11/11/10
Matrix:	SO - Trip Blank Soil	**Date Received:**	11/12/10
Method:	SW846 8260B	**Percent Solids:**	n/a
Project:	Holloman AFB; Alamogordo, NM		

VOA Special List

CAS No.	Compound	Result	RL	MDL	Units	Q
124-48-1	Dibromochloromethane	ND	5.0	1.0	ug/kg	
75-71-8	Dichlorodifluoromethane	ND	5.0	1.5	ug/kg	
156-59-2	cis-1,2-Dichloroethylene	ND	5.0	1.5	ug/kg	
10061-01-5	cis-1,3-Dichloropropene	ND	5.0	1.0	ug/kg	
1476-11-5	cis-1,4-Dichloro-2-Butene	ND	25	5.0	ug/kg	
541-73-1	m-Dichlorobenzene	ND	5.0	1.2	ug/kg	
95-50-1	o-Dichlorobenzene	ND	5.0	1.1	ug/kg	
106-46-7	p-Dichlorobenzene	ND	5.0	1.1	ug/kg	
156-60-5	trans-1,2-Dichloroethylene	ND	5.0	1.5	ug/kg	
10061-02-6	trans-1,3-Dichloropropene	ND	5.0	1.1	ug/kg	
100-41-4	Ethylbenzene	ND	5.0	1.0	ug/kg	
97-63-2	Ethyl methacrylate	ND	25	5.0	ug/kg	
76-13-1	Freon 113	ND	5.0	1.7	ug/kg	
591-78-6	2-Hexanone	ND	25	5.4	ug/kg	
87-68-3	Hexachlorobutadiene	ND	5.0	2.0	ug/kg	
110-54-3	Hexane	ND	5.0	1.9	ug/kg	
98-82-8	Isopropylbenzene	ND	5.0	1.1	ug/kg	
99-87-6	p-Isopropyltoluene	ND	5.0	1.2	ug/kg	
108-10-1	4-Methyl-2-pentanone	ND	25	5.5	ug/kg	
126-98-7	Methacrylonitrile	ND	25	9.2	ug/kg	
74-83-9	Methyl bromide	ND	5.0	2.0	ug/kg	
74-87-3	Methyl chloride	ND	5.0	2.0	ug/kg	
74-88-4	Methyl iodide	ND	10	1.1	ug/kg	
80-62-6	Methyl methacrylate	ND	5.0	1.8	ug/kg	
74-95-3	Methylene bromide	ND	5.0	1.5	ug/kg	
75-09-2	Methylene chloride [a]	10.9	10	4.6	ug/kg	B
78-93-3	Methyl ethyl ketone	ND	25	6.1	ug/kg	
1634-04-4	Methyl Tert Butyl Ether	ND	5.0	2.0	ug/kg	
91-20-3	Naphthalene	ND	5.0	2.0	ug/kg	
76-01-7	Pentachloroethane	ND	25	5.0	ug/kg	
107-12-0	Propionitrile	ND	50	16	ug/kg	
103-65-1	n-Propylbenzene	ND	5.0	1.4	ug/kg	
100-42-5	Styrene	ND	5.0	2.6	ug/kg	
630-20-6	1,1,1,2-Tetrachloroethane	ND	5.0	1.0	ug/kg	
71-55-6	1,1,1-Trichloroethane	ND	5.0	1.1	ug/kg	
79-34-5	1,1,2,2-Tetrachloroethane	ND	5.0	1.2	ug/kg	
79-00-5	1,1,2-Trichloroethane	ND	5.0	1.1	ug/kg	
87-61-6	1,2,3-Trichlorobenzene	ND	5.0	1.0	ug/kg	
96-18-4	1,2,3-Trichloropropane	ND	5.0	1.7	ug/kg	
120-82-1	1,2,4-Trichlorobenzene	ND	5.0	1.2	ug/kg	

ND = Not detected MDL - Method Detection Limit
RL = Reporting Limit
E = Indicates value exceeds calibration range

J = Indicates an estimated value
B = Indicates analyte found in associated method blank
N = Indicates presumptive evidence of a compound

Report of Analysis

Client Sample ID:	SS39-TB-11112010-B		
Lab Sample ID:	F78009-35	**Date Sampled:**	11/11/10
Matrix:	SO - Trip Blank Soil	**Date Received:**	11/12/10
Method:	SW846 8260B	**Percent Solids:**	n/a
Project:	Holloman AFB; Alamogordo, NM		

VOA Special List

CAS No.	Compound	Result	RL	MDL	Units	Q
95-63-6	1,2,4-Trimethylbenzene	ND	5.0	1.1	ug/kg	
108-67-8	1,3,5-Trimethylbenzene	ND	5.0	1.3	ug/kg	
127-18-4	Tetrachloroethylene	ND	5.0	1.0	ug/kg	
108-88-3	Toluene	ND	5.0	1.2	ug/kg	
79-01-6	Trichloroethylene	ND	5.0	1.2	ug/kg	
75-69-4	Trichlorofluoromethane	ND	5.0	2.0	ug/kg	
110-57-6	Trans-1,4-Dichloro-2-Butene	ND	25	5.0	ug/kg	
75-01-4	Vinyl chloride	ND	5.0	1.5	ug/kg	
108-05-4	Vinyl Acetate	ND	25	14	ug/kg	
	m,p-Xylene	ND	10	2.2	ug/kg	
95-47-6	o-Xylene	ND	5.0	1.0	ug/kg	

CAS No.	Surrogate Recoveries	Run# 1	Run# 2	Limits
1868-53-7	Dibromofluoromethane	115%		80-121%
2037-26-5	Toluene-D8	95%		71-130%
460-00-4	4-Bromofluorobenzene	89%		59-148%
17060-07-0	1,2-Dichloroethane-D4	110%		77-123%

(a) Suspected laboratory contaminant.

ND = Not detected MDL - Method Detection Limit
RL = Reporting Limit
E = Indicates value exceeds calibration range

J = Indicates an estimated value
B = Indicates analyte found in associated method blank
N = Indicates presumptive evidence of a compound

Report of Analysis

Client Sample ID:	SS39-TB-11112010-B		
Lab Sample ID:	F78009-35	**Date Sampled:**	11/11/10
Matrix:	SO - Trip Blank Soil	**Date Received:**	11/12/10
Method:	SW846 8015C	**Percent Solids:**	n/a
Project:	Holloman AFB; Alamogordo, NM		

	File ID	DF	Analyzed	By	Prep Date	Prep Batch	Analytical Batch
Run #1	QR056917.D	1	11/20/10	AH	n/a	n/a	GQR2475
Run #2							

	Initial Weight	Final Volume	Methanol Aliquot
Run #1	5.00 g	5.0 ml	100 ul
Run #2			

CAS No.	Compound	Result	RL	MDL	Units	Q
	TPH-GRO (C6-C10)	ND	5.0	2.5	mg/kg	

CAS No.	Surrogate Recoveries	Run# 1	Run# 2	Limits
460-00-4	4-Bromofluorobenzene	79%		56-136%
98-08-8	aaa-Trifluorotoluene	72%		61-121%

ND = Not detected MDL - Method Detection Limit
RL = Reporting Limit
E = Indicates value exceeds calibration range

J = Indicates an estimated value
B = Indicates analyte found in associated method blank
N = Indicates presumptive evidence of a compound

Report of Analysis

Client Sample ID:	SD27-TTMW-05		
Lab Sample ID:	F78009-36	**Date Sampled:**	11/11/10
Matrix:	AQ - Ground Water	**Date Received:**	11/12/10
Method:	SW846 8260B	**Percent Solids:**	n/a
Project:	Holloman AFB; Alamogordo, NM		

	File ID	DF	Analyzed	By	Prep Date	Prep Batch	Analytical Batch
Run #1 [a]	F046134.D	10	11/30/10	LD	n/a	n/a	VF1353
Run #2							

	Purge Volume
Run #1	5.0 ml
Run #2	

VOA Special List

CAS No.	Compound	Result	RL	MDL	Units	Q
67-64-1	Acetone	ND	250	100	ug/l	
75-05-8	Acetonitrile	ND	200	50	ug/l	
107-02-8	Acrolein	ND	200	50	ug/l	
107-13-1	Acrylonitrile	ND	100	30	ug/l	
107-05-1	Allyl chloride	ND	20	3.0	ug/l	
71-43-2	Benzene	371	10	2.0	ug/l	
100-44-7	Benzyl Chloride	ND	20	5.0	ug/l	
108-86-1	Bromobenzene	ND	10	2.5	ug/l	
74-97-5	Bromochloromethane	ND	10	2.2	ug/l	
75-27-4	Bromodichloromethane	ND	10	2.0	ug/l	
75-25-2	Bromoform	ND	10	2.0	ug/l	
104-51-8	n-Butylbenzene	ND	10	2.6	ug/l	
135-98-8	sec-Butylbenzene	7.8	10	2.2	ug/l	J
98-06-6	tert-Butylbenzene	ND	10	2.7	ug/l	
108-90-7	Chlorobenzene	ND	10	2.0	ug/l	
75-00-3	Chloroethane	ND	20	5.0	ug/l	
67-66-3	Chloroform	ND	10	2.2	ug/l	
544-10-5	1-Chlorohexane	ND	20	2.5	ug/l	
95-49-8	o-Chlorotoluene	ND	10	2.2	ug/l	
106-43-4	p-Chlorotoluene	ND	10	2.0	ug/l	
110-75-8	2-Chloroethyl vinyl ether	ND	50	12	ug/l	
75-15-0	Carbon disulfide	ND	20	5.0	ug/l	
56-23-5	Carbon tetrachloride	ND	10	2.5	ug/l	
75-34-3	1,1-Dichloroethane	ND	10	2.5	ug/l	
75-35-4	1,1-Dichloroethylene	ND	10	2.3	ug/l	
563-58-6	1,1-Dichloropropene	ND	10	2.8	ug/l	
96-12-8	1,2-Dibromo-3-chloropropane	ND	20	5.0	ug/l	
106-93-4	1,2-Dibromoethane	ND	10	3.7	ug/l	
107-06-2	1,2-Dichloroethane	ND	10	2.0	ug/l	
78-87-5	1,2-Dichloropropane	ND	10	2.5	ug/l	
142-28-9	1,3-Dichloropropane	ND	10	2.0	ug/l	
594-20-7	2,2-Dichloropropane	ND	10	4.4	ug/l	

ND = Not detected MDL - Method Detection Limit
RL = Reporting Limit
E = Indicates value exceeds calibration range

J = Indicates an estimated value
B = Indicates analyte found in associated method blank
N = Indicates presumptive evidence of a compound

Report of Analysis

Client Sample ID:	SD27-TTMW-05		
Lab Sample ID:	F78009-36	**Date Sampled:**	11/11/10
Matrix:	AQ - Ground Water	**Date Received:**	11/12/10
Method:	SW846 8260B	**Percent Solids:**	n/a
Project:	Holloman AFB; Alamogordo, NM		

VOA Special List

CAS No.	Compound	Result	RL	MDL	Units	Q
124-48-1	Dibromochloromethane	ND	10	2.0	ug/l	
75-71-8	Dichlorodifluoromethane	ND	20	5.0	ug/l	
156-59-2	cis-1,2-Dichloroethylene	ND	10	2.6	ug/l	
10061-01-5	cis-1,3-Dichloropropene	ND	10	2.0	ug/l	
1476-11-5	cis-1,4-Dichloro-2-Butene	ND	100	10	ug/l	
541-73-1	m-Dichlorobenzene	ND	10	2.0	ug/l	
95-50-1	o-Dichlorobenzene	ND	10	2.5	ug/l	
106-46-7	p-Dichlorobenzene	ND	10	2.3	ug/l	
156-60-5	trans-1,2-Dichloroethylene	ND	10	3.5	ug/l	
10061-02-6	trans-1,3-Dichloropropene	ND	10	2.0	ug/l	
100-41-4	Ethylbenzene	504	10	2.0	ug/l	
97-63-2	Ethyl methacrylate	ND	50	10	ug/l	
76-13-1	Freon 113	ND	10	4.7	ug/l	
591-78-6	2-Hexanone	ND	100	40	ug/l	
87-68-3	Hexachlorobutadiene	ND	20	8.0	ug/l	
110-54-3	Hexane	ND	20	5.9	ug/l	
98-82-8	Isopropylbenzene	51.8	10	2.0	ug/l	
99-87-6	p-Isopropyltoluene	6.4	10	2.1	ug/l	J
108-10-1	4-Methyl-2-pentanone	ND	50	20	ug/l	
126-98-7	Methacrylonitrile	ND	200	50	ug/l	
74-83-9	Methyl bromide	ND	20	5.0	ug/l	
74-87-3	Methyl chloride	ND	20	5.0	ug/l	
74-88-4	Methyl iodide	ND	10	2.0	ug/l	
80-62-6	Methyl methacrylate	ND	50	10	ug/l	
74-95-3	Methylene bromide	ND	20	2.5	ug/l	
75-09-2	Methylene chloride	ND	50	20	ug/l	
78-93-3	Methyl ethyl ketone	ND	50	20	ug/l	
1634-04-4	Methyl Tert Butyl Ether	ND	10	3.4	ug/l	
91-20-3	Naphthalene	57.4	50	10	ug/l	
76-01-7	Pentachloroethane	ND	100	20	ug/l	
107-12-0	Propionitrile	ND	200	50	ug/l	
103-65-1	n-Propylbenzene	50.1	10	2.0	ug/l	
100-42-5	Styrene	ND	10	2.0	ug/l	
630-20-6	1,1,1,2-Tetrachloroethane	ND	10	2.0	ug/l	
71-55-6	1,1,1-Trichloroethane	ND	10	2.0	ug/l	
79-34-5	1,1,2,2-Tetrachloroethane	ND	10	2.3	ug/l	
79-00-5	1,1,2-Trichloroethane	ND	10	2.2	ug/l	
87-61-6	1,2,3-Trichlorobenzene	ND	10	5.0	ug/l	
96-18-4	1,2,3-Trichloropropane	ND	20	3.0	ug/l	
120-82-1	1,2,4-Trichlorobenzene	ND	10	5.0	ug/l	

ND = Not detected MDL - Method Detection Limit
RL = Reporting Limit
E = Indicates value exceeds calibration range

J = Indicates an estimated value
B = Indicates analyte found in associated method blank
N = Indicates presumptive evidence of a compound

Report of Analysis

Client Sample ID:	SD27-TTMW-05		
Lab Sample ID:	F78009-36	**Date Sampled:**	11/11/10
Matrix:	AQ - Ground Water	**Date Received:**	11/12/10
Method:	SW846 8260B	**Percent Solids:**	n/a
Project:	Holloman AFB; Alamogordo, NM		

VOA Special List

CAS No.	Compound	Result	RL	MDL	Units	Q
95-63-6	1,2,4-Trimethylbenzene	223	20	2.7	ug/l	
108-67-8	1,3,5-Trimethylbenzene	53.5	20	2.1	ug/l	
127-18-4	Tetrachloroethylene	ND	10	2.5	ug/l	
108-88-3	Toluene	279	10	2.0	ug/l	
79-01-6	Trichloroethylene	ND	10	2.6	ug/l	
75-69-4	Trichlorofluoromethane	ND	20	5.0	ug/l	
110-57-6	Trans-1,4-Dichloro-2-Butene	ND	100	20	ug/l	
75-01-4	Vinyl chloride	ND	10	2.2	ug/l	
108-05-4	Vinyl Acetate	ND	100	20	ug/l	
	m,p-Xylene	145	20	3.2	ug/l	
95-47-6	o-Xylene	332	10	2.0	ug/l	

CAS No.	Surrogate Recoveries	Run# 1	Run# 2	Limits
1868-53-7	Dibromofluoromethane	106%		87-116%
17060-07-0	1,2-Dichloroethane-D4	96%		76-127%
2037-26-5	Toluene-D8	94%		86-112%
460-00-4	4-Bromofluorobenzene	93%		84-120%

(a) Sample analyzed beyond hold time; reported results are considered minimum values.

ND = Not detected MDL - Method Detection Limit
RL = Reporting Limit
E = Indicates value exceeds calibration range

J = Indicates an estimated value
B = Indicates analyte found in associated method blank
N = Indicates presumptive evidence of a compound

Report of Analysis

Client Sample ID:	SD27-TTMW-05		
Lab Sample ID:	F78009-36	**Date Sampled:**	11/11/10
Matrix:	AQ - Ground Water	**Date Received:**	11/12/10
Method:	SW846 8270D SW846 3510C	**Percent Solids:**	n/a
Project:	Holloman AFB; Alamogordo, NM		

	File ID	DF	Analyzed	By	Prep Date	Prep Batch	Analytical Batch
Run #1 [a]	U022584.D	4	11/29/10	NAF	11/18/10	OP35095	SU1077
Run #2							

	Initial Volume	Final Volume
Run #1	1000 ml	1.0 ml
Run #2		

ABN Full List

CAS No.	Compound	Result	RL	MDL	Units	Q
65-85-0	Benzoic Acid	ND	200	40	ug/l	
95-57-8	2-Chlorophenol	ND	20	2.0	ug/l	
59-50-7	4-Chloro-3-methyl phenol	ND	20	2.0	ug/l	
120-83-2	2,4-Dichlorophenol	ND	20	2.0	ug/l	
105-67-9	2,4-Dimethylphenol	4.5	20	4.4	ug/l	J
51-28-5	2,4-Dinitrophenol	ND	100	40	ug/l	
534-52-1	4,6-Dinitro-o-cresol	ND	40	8.0	ug/l	
95-48-7	2-Methylphenol	5.5	20	2.2	ug/l	J
	3&4-Methylphenol	ND	20	4.4	ug/l	
88-75-5	2-Nitrophenol	ND	20	2.2	ug/l	
100-02-7	4-Nitrophenol	ND	100	20	ug/l	
87-86-5	Pentachlorophenol	ND	100	22	ug/l	
108-95-2	Phenol	ND	20	2.0	ug/l	
95-95-4	2,4,5-Trichlorophenol	ND	20	2.0	ug/l	
88-06-2	2,4,6-Trichlorophenol	ND	20	2.0	ug/l	
83-32-9	Acenaphthene	ND	20	2.0	ug/l	
208-96-8	Acenaphthylene	ND	20	2.0	ug/l	
62-53-3	Aniline	ND	20	2.1	ug/l	
120-12-7	Anthracene	ND	20	2.0	ug/l	
92-87-5	Benzidine	ND	100	19	ug/l	
56-55-3	Benzo(a)anthracene	ND	20	2.0	ug/l	
50-32-8	Benzo(a)pyrene	ND	20	2.0	ug/l	
205-99-2	Benzo(b)fluoranthene	ND	20	2.0	ug/l	
191-24-2	Benzo(g,h,i)perylene	ND	20	2.0	ug/l	
207-08-9	Benzo(k)fluoranthene	ND	20	2.0	ug/l	
101-55-3	4-Bromophenyl phenyl ether	ND	20	2.0	ug/l	
85-68-7	Butyl benzyl phthalate	ND	20	4.4	ug/l	
100-51-6	Benzyl Alcohol	ND	20	4.0	ug/l	
91-58-7	2-Chloronaphthalene	ND	20	2.0	ug/l	
106-47-8	4-Chloroaniline	ND	20	2.0	ug/l	
86-74-8	Carbazole	ND	20	2.0	ug/l	
218-01-9	Chrysene	ND	20	2.0	ug/l	

ND = Not detected MDL - Method Detection Limit
RL = Reporting Limit
E = Indicates value exceeds calibration range

J = Indicates an estimated value
B = Indicates analyte found in associated method blank
N = Indicates presumptive evidence of a compound

Report of Analysis

Client Sample ID:	SD27-TTMW-05		
Lab Sample ID:	F78009-36	**Date Sampled:**	11/11/10
Matrix:	AQ - Ground Water	**Date Received:**	11/12/10
Method:	SW846 8270D SW846 3510C	**Percent Solids:**	n/a
Project:	Holloman AFB; Alamogordo, NM		

ABN Full List

CAS No.	Compound	Result	RL	MDL	Units	Q
111-91-1	bis(2-Chloroethoxy)methane	ND	20	2.0	ug/l	
111-44-4	bis(2-Chloroethyl)ether	ND	20	2.2	ug/l	
108-60-1	bis(2-Chloroisopropyl)ether	ND	20	2.2	ug/l	
7005-72-3	4-Chlorophenyl phenyl ether	ND	20	2.0	ug/l	
95-50-1	1,2-Dichlorobenzene	ND	20	4.0	ug/l	
122-66-7	1,2-Diphenylhydrazine	ND	20	2.0	ug/l	
541-73-1	1,3-Dichlorobenzene	ND	20	4.0	ug/l	
106-46-7	1,4-Dichlorobenzene	ND	20	4.0	ug/l	
121-14-2	2,4-Dinitrotoluene	ND	20	2.0	ug/l	
606-20-2	2,6-Dinitrotoluene	ND	20	2.0	ug/l	
91-94-1	3,3'-Dichlorobenzidine	ND	40	4.0	ug/l	
53-70-3	Dibenzo(a,h)anthracene	ND	20	2.1	ug/l	
132-64-9	Dibenzofuran	ND	20	2.0	ug/l	
84-74-2	Di-n-butyl phthalate	ND	20	3.5	ug/l	
117-84-0	Di-n-octyl phthalate	ND	20	4.4	ug/l	
84-66-2	Diethyl phthalate	ND	20	4.4	ug/l	
131-11-3	Dimethyl phthalate	ND	20	4.0	ug/l	
117-81-7	bis(2-Ethylhexyl)phthalate	ND	20	4.4	ug/l	
206-44-0	Fluoranthene	ND	20	2.0	ug/l	
86-73-7	Fluorene	ND	20	2.0	ug/l	
118-74-1	Hexachlorobenzene	ND	20	2.2	ug/l	
87-68-3	Hexachlorobutadiene	ND	20	4.0	ug/l	
77-47-4	Hexachlorocyclopentadiene	ND	40	7.6	ug/l	
67-72-1	Hexachloroethane	ND	20	4.0	ug/l	
193-39-5	Indeno(1,2,3-cd)pyrene	ND	20	2.0	ug/l	
78-59-1	Isophorone	ND	20	2.0	ug/l	
90-12-0	1-Methylnaphthalene	24.7	20	2.0	ug/l	
91-57-6	2-Methylnaphthalene	26.7	20	2.3	ug/l	
88-74-4	2-Nitroaniline	ND	20	2.0	ug/l	
99-09-2	3-Nitroaniline	ND	20	2.0	ug/l	
100-01-6	4-Nitroaniline	ND	20	2.0	ug/l	
91-20-3	Naphthalene	60.0	20	3.2	ug/l	
98-95-3	Nitrobenzene	ND	20	2.4	ug/l	
62-75-9	N-Nitrosodimethylamine	ND	20	9.6	ug/l	
621-64-7	N-Nitroso-di-n-propylamine	ND	20	2.0	ug/l	
86-30-6	N-Nitrosodiphenylamine	ND	20	4.0	ug/l	
85-01-8	Phenanthrene	ND	20	2.0	ug/l	
129-00-0	Pyrene	ND	20	2.0	ug/l	
110-86-1	Pyridine	ND	40	6.4	ug/l	
120-82-1	1,2,4-Trichlorobenzene	ND	20	2.0	ug/l	

ND = Not detected MDL - Method Detection Limit
RL = Reporting Limit
E = Indicates value exceeds calibration range

J = Indicates an estimated value
B = Indicates analyte found in associated method blank
N = Indicates presumptive evidence of a compound

Report of Analysis

Client Sample ID:	SD27-TTMW-05		
Lab Sample ID:	F78009-36	**Date Sampled:**	11/11/10
Matrix:	AQ - Ground Water	**Date Received:**	11/12/10
Method:	SW846 8270D SW846 3510C	**Percent Solids:**	n/a
Project:	Holloman AFB; Alamogordo, NM		

ABN Full List

CAS No.	Surrogate Recoveries	Run# 1	Run# 2	Limits
367-12-4	2-Fluorophenol	47%		14-62%
4165-62-2	Phenol-d5	37%		10-40%
118-79-6	2,4,6-Tribromophenol	89%		33-118%
4165-60-0	Nitrobenzene-d5	90%		42-108%
321-60-8	2-Fluorobiphenyl	80%		40-106%
1718-51-0	Terphenyl-d14	81%		39-121%

(a) Dilution required due to matrix interference.

ND = Not detected MDL - Method Detection Limit
RL = Reporting Limit
E = Indicates value exceeds calibration range

J = Indicates an estimated value
B = Indicates analyte found in associated method blank
N = Indicates presumptive evidence of a compound

Accutest Laboratories

Report of Analysis

Client Sample ID:	SD27-TTMW-05		
Lab Sample ID:	F78009-36	**Date Sampled:**	11/11/10
Matrix:	AQ - Ground Water	**Date Received:**	11/12/10
Method:	SW846 8015C	**Percent Solids:**	n/a
Project:	Holloman AFB; Alamogordo, NM		

	File ID	DF	Analyzed	By	Prep Date	Prep Batch	Analytical Batch
Run #1	CD100614.D	10	11/18/10	WV	n/a	n/a	GCD4156
Run #2							

	Purge Volume
Run #1	5.0 ml
Run #2	

CAS No.	Compound	Result	RL	MDL	Units	Q
	TPH-GRO (C6-C10)	6.10	1.0	0.50	mg/l	

CAS No.	Surrogate Recoveries	Run# 1	Run# 2	Limits
460-00-4	4-Bromofluorobenzene	107%		57-129%
98-08-8	aaa-Trifluorotoluene	97%		58-120%

ND = Not detected MDL - Method Detection Limit
RL = Reporting Limit
E = Indicates value exceeds calibration range

J = Indicates an estimated value
B = Indicates analyte found in associated method blank
N = Indicates presumptive evidence of a compound

Report of Analysis

Client Sample ID:	SD27-TTMW-05		
Lab Sample ID:	F78009-36	**Date Sampled:**	11/11/10
Matrix:	AQ - Ground Water	**Date Received:**	11/12/10
Method:	SW846 8015C SW846 3510C	**Percent Solids:**	n/a
Project:	Holloman AFB; Alamogordo, NM		

	File ID	DF	Analyzed	By	Prep Date	Prep Batch	Analytical Batch
Run #1	ZF37717.D	1	11/18/10	FEA	11/18/10	OP35097	GZF1576
Run #2							

	Initial Volume	Final Volume
Run #1	850 ml	1.0 ml
Run #2		

CAS No.	Compound	Result	RL	MDL	Units	Q
	TPH (C10-C28) [a]	1.32	0.29	0.12	mg/l	

CAS No.	Surrogate Recoveries	Run# 1	Run# 2	Limits
84-15-1	o-Terphenyl	77%		42-114%

(a) Petroleum hydrocarbon pattern begins before C10 and extends beyond C28.

ND = Not detected MDL - Method Detection Limit
RL = Reporting Limit
E = Indicates value exceeds calibration range

J = Indicates an estimated value
B = Indicates analyte found in associated method blank
N = Indicates presumptive evidence of a compound

Report of Analysis

Client Sample ID:	SD27-TTMW-05		
Lab Sample ID:	F78009-36	**Date Sampled:**	11/11/10
Matrix:	AQ - Ground Water	**Date Received:**	11/12/10
		Percent Solids:	n/a
Project:	Holloman AFB; Alamogordo, NM		

Total Metals Analysis

Analyte	Result	RL	MDL	Units	DF	Prep	Analyzed	By	Method	Prep Method
Arsenic [a]	10 U	50	10	ug/l	5	11/22/10	11/23/10	RS	SW846 6010C [3]	SW846 3010A [5]
Barium [a]	69.4 B	1000	25	ug/l	5	11/22/10	11/23/10	RS	SW846 6010C [3]	SW846 3010A [5]
Cadmium [a]	5.0 U	25	5.0	ug/l	5	11/22/10	11/23/10	RS	SW846 6010C [3]	SW846 3010A [5]
Chromium [a]	5.0 U	50	5.0	ug/l	5	11/22/10	11/23/10	RS	SW846 6010C [3]	SW846 3010A [5]
Lead [a]	5.0 U	25	5.0	ug/l	5	11/22/10	11/23/10	RS	SW846 6010C [3]	SW846 3010A [5]
Mercury	0.050 U	1.0	0.050	ug/l	1	11/19/10	11/19/10	LM	SW846 7470A [1]	SW846 7470A [4]
Selenium [a]	10 U	50	10	ug/l	5	11/22/10	11/23/10	RS	SW846 6010C [3]	SW846 3010A [5]
Silver	1.0 U	10	1.0	ug/l	1	11/22/10	11/22/10	RS	SW846 6010C [2]	SW846 3010A [5]

(1) Instrument QC Batch: MA8520
(2) Instrument QC Batch: MA8526
(3) Instrument QC Batch: MA8530
(4) Prep QC Batch: MP19507
(5) Prep QC Batch: MP19523

(a) Elevated reporting limit(s) due to matrix interference.

RL = Reporting Limit
MDL = Method Detection Limit

U = Indicates a result < MDL
B = Indicates a result > = MDL but < RL

Report of Analysis

Client Sample ID:	SD27-TTMW-05		
Lab Sample ID:	F78009-36	**Date Sampled:**	11/11/10
Matrix:	AQ - Ground Water	**Date Received:**	11/12/10
		Percent Solids:	n/a
Project:	Holloman AFB; Alamogordo, NM		

General Chemistry

Analyte	Result	RL	MDL	Units	DF	Analyzed	By	Method
Solids, Total Dissolved	15300	10000	1000	mg/l	100	11/12/10 08:15	LE	SM19 2540C

RL = Reporting Limit
MDL = Method Detection Limit

U = Indicates a result < MDL
B = Indicates a result > = MDL but < RL

Report of Analysis

Client Sample ID:	SD27-TTMW-05		
Lab Sample ID:	F78009-36F	**Date Sampled:**	11/11/10
Matrix:	AQ - Groundwater Filtered	**Date Received:**	11/12/10
		Percent Solids:	n/a
Project:	Holloman AFB; Alamogordo, NM		

Dissolved Metals Analysis

Analyte	Result	RL	MDL	Units	DF	Prep	Analyzed	By	Method	Prep Method
Arsenic	6.4 B	10	2.0	ug/l	1	11/23/10	11/24/10	RS	SW846 6010C [2]	SW846 3010A [5]
Barium	48.6 B	200	5.0	ug/l	1	11/23/10	11/24/10	RS	SW846 6010C [2]	SW846 3010A [5]
Cadmium	1.0 U	5.0	1.0	ug/l	1	11/23/10	11/24/10	RS	SW846 6010C [2]	SW846 3010A [5]
Chromium [a]	4.0 U	40	4.0	ug/l	4	11/23/10	11/24/10	RS	SW846 6010C [3]	SW846 3010A [5]
Lead [a]	4.0 U	20	4.0	ug/l	4	11/23/10	11/24/10	RS	SW846 6010C [3]	SW846 3010A [5]
Mercury	0.050 U	1.0	0.050	ug/l	1	11/19/10	11/19/10	LM	SW846 7470A [1]	SW846 7470A [4]
Selenium [a]	8.0 U	40	8.0	ug/l	4	11/23/10	11/24/10	RS	SW846 6010C [3]	SW846 3010A [5]
Silver	1.0 U	10	1.0	ug/l	1	11/23/10	11/24/10	RS	SW846 6010C [2]	SW846 3010A [5]

(1) Instrument QC Batch: MA8520
(2) Instrument QC Batch: MA8530
(3) Instrument QC Batch: MA8534
(4) Prep QC Batch: MP19507
(5) Prep QC Batch: MP19535

(a) Elevated reporting limit(s) due to matrix interference.

RL = Reporting Limit
MDL = Method Detection Limit

U = Indicates a result < MDL
B = Indicates a result > = MDL but < RL

Report of Analysis

Client Sample ID:	SD27-TTMW-01		
Lab Sample ID:	F78009-37	**Date Sampled:**	11/11/10
Matrix:	AQ - Ground Water	**Date Received:**	11/12/10
Method:	SW846 8260B	**Percent Solids:**	n/a
Project:	Holloman AFB; Alamogordo, NM		

	File ID	DF	Analyzed	By	Prep Date	Prep Batch	Analytical Batch
Run #1	F046053.D	1	11/24/10	SH	n/a	n/a	VF1350
Run #2							

	Purge Volume
Run #1	5.0 ml
Run #2	

VOA Special List

CAS No.	Compound	Result	RL	MDL	Units	Q
67-64-1	Acetone	ND	25	10	ug/l	
75-05-8	Acetonitrile	ND	20	5.0	ug/l	
107-02-8	Acrolein	ND	20	5.0	ug/l	
107-13-1	Acrylonitrile	ND	10	3.0	ug/l	
107-05-1	Allyl chloride	ND	2.0	0.30	ug/l	
71-43-2	Benzene	ND	1.0	0.20	ug/l	
100-44-7	Benzyl Chloride	ND	2.0	0.50	ug/l	
108-86-1	Bromobenzene	ND	1.0	0.25	ug/l	
74-97-5	Bromochloromethane	ND	1.0	0.22	ug/l	
75-27-4	Bromodichloromethane	ND	1.0	0.20	ug/l	
75-25-2	Bromoform	ND	1.0	0.20	ug/l	
104-51-8	n-Butylbenzene	ND	1.0	0.26	ug/l	
135-98-8	sec-Butylbenzene	ND	1.0	0.22	ug/l	
98-06-6	tert-Butylbenzene	ND	1.0	0.27	ug/l	
108-90-7	Chlorobenzene	ND	1.0	0.20	ug/l	
75-00-3	Chloroethane	ND	2.0	0.50	ug/l	
67-66-3	Chloroform	ND	1.0	0.22	ug/l	
544-10-5	1-Chlorohexane	ND	2.0	0.25	ug/l	
95-49-8	o-Chlorotoluene	ND	1.0	0.22	ug/l	
106-43-4	p-Chlorotoluene	ND	1.0	0.20	ug/l	
110-75-8	2-Chloroethyl vinyl ether	ND	5.0	1.2	ug/l	
75-15-0	Carbon disulfide	ND	2.0	0.50	ug/l	
56-23-5	Carbon tetrachloride	ND	1.0	0.25	ug/l	
75-34-3	1,1-Dichloroethane	ND	1.0	0.25	ug/l	
75-35-4	1,1-Dichloroethylene	ND	1.0	0.23	ug/l	
563-58-6	1,1-Dichloropropene	ND	1.0	0.28	ug/l	
96-12-8	1,2-Dibromo-3-chloropropane	ND	2.0	0.50	ug/l	
106-93-4	1,2-Dibromoethane	ND	1.0	0.37	ug/l	
107-06-2	1,2-Dichloroethane	ND	1.0	0.20	ug/l	
78-87-5	1,2-Dichloropropane	ND	1.0	0.25	ug/l	
142-28-9	1,3-Dichloropropane	ND	1.0	0.20	ug/l	
594-20-7	2,2-Dichloropropane	ND	1.0	0.44	ug/l	

ND = Not detected MDL - Method Detection Limit
RL = Reporting Limit
E = Indicates value exceeds calibration range

J = Indicates an estimated value
B = Indicates analyte found in associated method blank
N = Indicates presumptive evidence of a compound

Report of Analysis

Client Sample ID:	SD27-TTMW-01		
Lab Sample ID:	F78009-37	**Date Sampled:**	11/11/10
Matrix:	AQ - Ground Water	**Date Received:**	11/12/10
Method:	SW846 8260B	**Percent Solids:**	n/a
Project:	Holloman AFB; Alamogordo, NM		

VOA Special List

CAS No.	Compound	Result	RL	MDL	Units	Q
124-48-1	Dibromochloromethane	ND	1.0	0.20	ug/l	
75-71-8	Dichlorodifluoromethane	ND	2.0	0.50	ug/l	
156-59-2	cis-1,2-Dichloroethylene	ND	1.0	0.26	ug/l	
10061-01-5	cis-1,3-Dichloropropene	ND	1.0	0.20	ug/l	
1476-11-5	cis-1,4-Dichloro-2-Butene	ND	10	1.0	ug/l	
541-73-1	m-Dichlorobenzene	ND	1.0	0.20	ug/l	
95-50-1	o-Dichlorobenzene	ND	1.0	0.25	ug/l	
106-46-7	p-Dichlorobenzene	ND	1.0	0.23	ug/l	
156-60-5	trans-1,2-Dichloroethylene	ND	1.0	0.35	ug/l	
10061-02-6	trans-1,3-Dichloropropene	ND	1.0	0.20	ug/l	
100-41-4	Ethylbenzene	ND	1.0	0.20	ug/l	
97-63-2	Ethyl methacrylate	ND	5.0	1.0	ug/l	
76-13-1	Freon 113	ND	1.0	0.47	ug/l	
591-78-6	2-Hexanone	ND	10	4.0	ug/l	
87-68-3	Hexachlorobutadiene	ND	2.0	0.80	ug/l	
110-54-3	Hexane	ND	2.0	0.59	ug/l	
98-82-8	Isopropylbenzene	ND	1.0	0.20	ug/l	
99-87-6	p-Isopropyltoluene	ND	1.0	0.21	ug/l	
108-10-1	4-Methyl-2-pentanone	ND	5.0	2.0	ug/l	
126-98-7	Methacrylonitrile	ND	20	5.0	ug/l	
74-83-9	Methyl bromide	ND	2.0	0.50	ug/l	
74-87-3	Methyl chloride	ND	2.0	0.50	ug/l	
74-88-4	Methyl iodide	ND	1.0	0.20	ug/l	
80-62-6	Methyl methacrylate	ND	5.0	1.0	ug/l	
74-95-3	Methylene bromide	ND	2.0	0.25	ug/l	
75-09-2	Methylene chloride	4.3	5.0	2.0	ug/l	JB
78-93-3	Methyl ethyl ketone	ND	5.0	2.0	ug/l	
1634-04-4	Methyl Tert Butyl Ether	ND	1.0	0.34	ug/l	
91-20-3	Naphthalene	ND	5.0	1.0	ug/l	
76-01-7	Pentachloroethane	ND	10	2.0	ug/l	
107-12-0	Propionitrile	ND	20	5.0	ug/l	
103-65-1	n-Propylbenzene	ND	1.0	0.20	ug/l	
100-42-5	Styrene	ND	1.0	0.20	ug/l	
630-20-6	1,1,1,2-Tetrachloroethane	ND	1.0	0.20	ug/l	
71-55-6	1,1,1-Trichloroethane	ND	1.0	0.20	ug/l	
79-34-5	1,1,2,2-Tetrachloroethane	ND	1.0	0.23	ug/l	
79-00-5	1,1,2-Trichloroethane	ND	1.0	0.22	ug/l	
87-61-6	1,2,3-Trichlorobenzene	ND	1.0	0.50	ug/l	
96-18-4	1,2,3-Trichloropropane	ND	2.0	0.30	ug/l	
120-82-1	1,2,4-Trichlorobenzene	ND	1.0	0.50	ug/l	

ND = Not detected MDL - Method Detection Limit
RL = Reporting Limit
E = Indicates value exceeds calibration range

J = Indicates an estimated value
B = Indicates analyte found in associated method blank
N = Indicates presumptive evidence of a compound

Report of Analysis

Client Sample ID:	SD27-TTMW-01		
Lab Sample ID:	F78009-37	**Date Sampled:**	11/11/10
Matrix:	AQ - Ground Water	**Date Received:**	11/12/10
Method:	SW846 8260B	**Percent Solids:**	n/a
Project:	Holloman AFB; Alamogordo, NM		

VOA Special List

CAS No.	Compound	Result	RL	MDL	Units	Q
95-63-6	1,2,4-Trimethylbenzene	ND	2.0	0.27	ug/l	
108-67-8	1,3,5-Trimethylbenzene	ND	2.0	0.21	ug/l	
127-18-4	Tetrachloroethylene	ND	1.0	0.25	ug/l	
108-88-3	Toluene	ND	1.0	0.20	ug/l	
79-01-6	Trichloroethylene	ND	1.0	0.26	ug/l	
75-69-4	Trichlorofluoromethane	ND	2.0	0.50	ug/l	
110-57-6	Trans-1,4-Dichloro-2-Butene	ND	10	2.0	ug/l	
75-01-4	Vinyl chloride	ND	1.0	0.22	ug/l	
108-05-4	Vinyl Acetate	ND	10	2.0	ug/l	
	m,p-Xylene	ND	2.0	0.32	ug/l	
95-47-6	o-Xylene	ND	1.0	0.20	ug/l	

CAS No.	Surrogate Recoveries	Run# 1	Run# 2	Limits
1868-53-7	Dibromofluoromethane	101%		87-116%
17060-07-0	1,2-Dichloroethane-D4	96%		76-127%
2037-26-5	Toluene-D8	105%		86-112%
460-00-4	4-Bromofluorobenzene	100%		84-120%

ND = Not detected MDL - Method Detection Limit
RL = Reporting Limit
E = Indicates value exceeds calibration range

J = Indicates an estimated value
B = Indicates analyte found in associated method blank
N = Indicates presumptive evidence of a compound

Report of Analysis

Client Sample ID:	SD27-TTMW-01		
Lab Sample ID:	F78009-37	**Date Sampled:**	11/11/10
Matrix:	AQ - Ground Water	**Date Received:**	11/12/10
Method:	SW846 8270D SW846 3510C	**Percent Solids:**	n/a
Project:	Holloman AFB; Alamogordo, NM		

	File ID	DF	Analyzed	By	Prep Date	Prep Batch	Analytical Batch
Run #1	U022585.D	1	11/29/10	NAF	11/18/10	OP35095	SU1077
Run #2							

	Initial Volume	Final Volume
Run #1	1050 ml	1.0 ml
Run #2		

ABN Full List

CAS No.	Compound	Result	RL	MDL	Units	Q
65-85-0	Benzoic Acid	ND	48	9.5	ug/l	
95-57-8	2-Chlorophenol	ND	4.8	0.48	ug/l	
59-50-7	4-Chloro-3-methyl phenol	ND	4.8	0.48	ug/l	
120-83-2	2,4-Dichlorophenol	ND	4.8	0.48	ug/l	
105-67-9	2,4-Dimethylphenol	ND	4.8	1.0	ug/l	
51-28-5	2,4-Dinitrophenol	ND	24	9.5	ug/l	
534-52-1	4,6-Dinitro-o-cresol	ND	9.5	1.9	ug/l	
95-48-7	2-Methylphenol	ND	4.8	0.51	ug/l	
	3&4-Methylphenol	ND	4.8	1.0	ug/l	
88-75-5	2-Nitrophenol	ND	4.8	0.51	ug/l	
100-02-7	4-Nitrophenol	ND	24	4.8	ug/l	
87-86-5	Pentachlorophenol	ND	24	5.1	ug/l	
108-95-2	Phenol	ND	4.8	0.48	ug/l	
95-95-4	2,4,5-Trichlorophenol	ND	4.8	0.48	ug/l	
88-06-2	2,4,6-Trichlorophenol	ND	4.8	0.48	ug/l	
83-32-9	Acenaphthene	ND	4.8	0.48	ug/l	
208-96-8	Acenaphthylene	ND	4.8	0.48	ug/l	
62-53-3	Aniline	ND	4.8	0.50	ug/l	
120-12-7	Anthracene	ND	4.8	0.48	ug/l	
92-87-5	Benzidine	ND	24	4.5	ug/l	
56-55-3	Benzo(a)anthracene	ND	4.8	0.48	ug/l	
50-32-8	Benzo(a)pyrene	ND	4.8	0.48	ug/l	
205-99-2	Benzo(b)fluoranthene	ND	4.8	0.48	ug/l	
191-24-2	Benzo(g,h,i)perylene	ND	4.8	0.48	ug/l	
207-08-9	Benzo(k)fluoranthene	ND	4.8	0.48	ug/l	
101-55-3	4-Bromophenyl phenyl ether	ND	4.8	0.48	ug/l	
85-68-7	Butyl benzyl phthalate	ND	4.8	1.0	ug/l	
100-51-6	Benzyl Alcohol	ND	4.8	0.95	ug/l	
91-58-7	2-Chloronaphthalene	ND	4.8	0.48	ug/l	
106-47-8	4-Chloroaniline	ND	4.8	0.48	ug/l	
86-74-8	Carbazole	ND	4.8	0.48	ug/l	
218-01-9	Chrysene	ND	4.8	0.48	ug/l	

ND = Not detected MDL - Method Detection Limit
RL = Reporting Limit
E = Indicates value exceeds calibration range

J = Indicates an estimated value
B = Indicates analyte found in associated method blank
N = Indicates presumptive evidence of a compound

Report of Analysis

Client Sample ID:	SD27-TTMW-01		
Lab Sample ID:	F78009-37	**Date Sampled:**	11/11/10
Matrix:	AQ - Ground Water	**Date Received:**	11/12/10
Method:	SW846 8270D SW846 3510C	**Percent Solids:**	n/a
Project:	Holloman AFB; Alamogordo, NM		

ABN Full List

CAS No.	Compound	Result	RL	MDL	Units	Q
111-91-1	bis(2-Chloroethoxy)methane	ND	4.8	0.48	ug/l	
111-44-4	bis(2-Chloroethyl)ether	ND	4.8	0.51	ug/l	
108-60-1	bis(2-Chloroisopropyl)ether	ND	4.8	0.51	ug/l	
7005-72-3	4-Chlorophenyl phenyl ether	ND	4.8	0.48	ug/l	
95-50-1	1,2-Dichlorobenzene	ND	4.8	0.95	ug/l	
122-66-7	1,2-Diphenylhydrazine	ND	4.8	0.48	ug/l	
541-73-1	1,3-Dichlorobenzene	ND	4.8	0.95	ug/l	
106-46-7	1,4-Dichlorobenzene	ND	4.8	0.95	ug/l	
121-14-2	2,4-Dinitrotoluene	ND	4.8	0.48	ug/l	
606-20-2	2,6-Dinitrotoluene	ND	4.8	0.48	ug/l	
91-94-1	3,3'-Dichlorobenzidine	ND	9.5	0.95	ug/l	
53-70-3	Dibenzo(a,h)anthracene	ND	4.8	0.50	ug/l	
132-64-9	Dibenzofuran	ND	4.8	0.48	ug/l	
84-74-2	Di-n-butyl phthalate	1.9	4.8	0.83	ug/l	J
117-84-0	Di-n-octyl phthalate	ND	4.8	1.0	ug/l	
84-66-2	Diethyl phthalate	ND	4.8	1.0	ug/l	
131-11-3	Dimethyl phthalate	ND	4.8	0.94	ug/l	
117-81-7	bis(2-Ethylhexyl)phthalate	ND	4.8	1.0	ug/l	
206-44-0	Fluoranthene	ND	4.8	0.48	ug/l	
86-73-7	Fluorene	ND	4.8	0.48	ug/l	
118-74-1	Hexachlorobenzene	ND	4.8	0.53	ug/l	
87-68-3	Hexachlorobutadiene	ND	4.8	0.95	ug/l	
77-47-4	Hexachlorocyclopentadiene	ND	9.5	1.8	ug/l	
67-72-1	Hexachloroethane	ND	4.8	0.95	ug/l	
193-39-5	Indeno(1,2,3-cd)pyrene	ND	4.8	0.48	ug/l	
78-59-1	Isophorone	ND	4.8	0.48	ug/l	
90-12-0	1-Methylnaphthalene	ND	4.8	0.48	ug/l	
91-57-6	2-Methylnaphthalene	ND	4.8	0.54	ug/l	
88-74-4	2-Nitroaniline	ND	4.8	0.48	ug/l	
99-09-2	3-Nitroaniline	ND	4.8	0.48	ug/l	
100-01-6	4-Nitroaniline	ND	4.8	0.48	ug/l	
91-20-3	Naphthalene	ND	4.8	0.76	ug/l	
98-95-3	Nitrobenzene	ND	4.8	0.56	ug/l	
62-75-9	N-Nitrosodimethylamine	ND	4.8	2.3	ug/l	
621-64-7	N-Nitroso-di-n-propylamine	ND	4.8	0.48	ug/l	
86-30-6	N-Nitrosodiphenylamine	ND	4.8	0.95	ug/l	
85-01-8	Phenanthrene	ND	4.8	0.48	ug/l	
129-00-0	Pyrene	ND	4.8	0.48	ug/l	
110-86-1	Pyridine	ND	9.5	1.5	ug/l	
120-82-1	1,2,4-Trichlorobenzene	ND	4.8	0.48	ug/l	

ND = Not detected MDL - Method Detection Limit
RL = Reporting Limit
E = Indicates value exceeds calibration range

J = Indicates an estimated value
B = Indicates analyte found in associated method blank
N = Indicates presumptive evidence of a compound

Report of Analysis

Client Sample ID:	SD27-TTMW-01		
Lab Sample ID:	F78009-37	**Date Sampled:**	11/11/10
Matrix:	AQ - Ground Water	**Date Received:**	11/12/10
Method:	SW846 8270D SW846 3510C	**Percent Solids:**	n/a
Project:	Holloman AFB; Alamogordo, NM		

ABN Full List

CAS No.	Surrogate Recoveries	Run# 1	Run# 2	Limits
367-12-4	2-Fluorophenol	44%		14-62%
4165-62-2	Phenol-d5	34%		10-40%
118-79-6	2,4,6-Tribromophenol	84%		33-118%
4165-60-0	Nitrobenzene-d5	81%		42-108%
321-60-8	2-Fluorobiphenyl	74%		40-106%
1718-51-0	Terphenyl-d14	69%		39-121%

ND = Not detected MDL - Method Detection Limit
RL = Reporting Limit
E = Indicates value exceeds calibration range

J = Indicates an estimated value
B = Indicates analyte found in associated method blank
N = Indicates presumptive evidence of a compound

Report of Analysis

Client Sample ID:	SD27-TTMW-01		
Lab Sample ID:	F78009-37	**Date Sampled:**	11/11/10
Matrix:	AQ - Ground Water	**Date Received:**	11/12/10
Method:	SW846 8015C	**Percent Solids:**	n/a
Project:	Holloman AFB; Alamogordo, NM		

	File ID	DF	Analyzed	By	Prep Date	Prep Batch	Analytical Batch
Run #1	CD100593.D	1	11/18/10	WV	n/a	n/a	GCD4156
Run #2							

	Purge Volume
Run #1	5.0 ml
Run #2	

CAS No.	Compound	Result	RL	MDL	Units	Q
	TPH-GRO (C6-C10)	ND	0.10	0.050	mg/l	

CAS No.	Surrogate Recoveries	Run# 1	Run# 2	Limits
460-00-4	4-Bromofluorobenzene	88%		57-129%
98-08-8	aaa-Trifluorotoluene	78%		58-120%

ND = Not detected MDL - Method Detection Limit
RL = Reporting Limit
E = Indicates value exceeds calibration range

J = Indicates an estimated value
B = Indicates analyte found in associated method blank
N = Indicates presumptive evidence of a compound

Report of Analysis

Client Sample ID:	SD27-TTMW-01		
Lab Sample ID:	F78009-37	**Date Sampled:**	11/11/10
Matrix:	AQ - Ground Water	**Date Received:**	11/12/10
Method:	SW846 8015C SW846 3510C	**Percent Solids:**	n/a
Project:	Holloman AFB; Alamogordo, NM		

	File ID	DF	Analyzed	By	Prep Date	Prep Batch	Analytical Batch
Run #1	ZF37714.D	1	11/18/10	FEA	11/18/10	OP35097	GZF1576
Run #2							

	Initial Volume	Final Volume
Run #1	1030 ml	1.0 ml
Run #2		

CAS No.	Compound	Result	RL	MDL	Units	Q
	TPH (C10-C28)	0.129	0.24	0.097	mg/l	J

CAS No.	Surrogate Recoveries	Run# 1	Run# 2	Limits
84-15-1	o-Terphenyl	83%		42-114%

ND = Not detected MDL - Method Detection Limit
RL = Reporting Limit
E = Indicates value exceeds calibration range

J = Indicates an estimated value
B = Indicates analyte found in associated method blank
N = Indicates presumptive evidence of a compound

Report of Analysis

Client Sample ID:	SD27-TTMW-01		
Lab Sample ID:	F78009-37	**Date Sampled:**	11/11/10
Matrix:	AQ - Ground Water	**Date Received:**	11/12/10
		Percent Solids:	n/a
Project:	Holloman AFB; Alamogordo, NM		

Total Metals Analysis

Analyte	Result	RL	MDL	Units	DF	Prep	Analyzed	By	Method	Prep Method
Arsenic [a]	16.8 B	50	10	ug/l	5	11/22/10	11/23/10	RS	SW846 6010C [3]	SW846 3010A [5]
Barium	290	200	5.0	ug/l	1	11/22/10	11/22/10	RS	SW846 6010C [2]	SW846 3010A [5]
Cadmium [a]	5.0 U	25	5.0	ug/l	5	11/22/10	11/23/10	RS	SW846 6010C [3]	SW846 3010A [5]
Chromium [a]	23.2 B	50	5.0	ug/l	5	11/22/10	11/23/10	RS	SW846 6010C [3]	SW846 3010A [5]
Lead [a]	11.9 B	25	5.0	ug/l	5	11/22/10	11/23/10	RS	SW846 6010C [3]	SW846 3010A [5]
Mercury	0.050 U	1.0	0.050	ug/l	1	11/19/10	11/19/10	LM	SW846 7470A [1]	SW846 7470A [4]
Selenium [a]	16.8 B	50	10	ug/l	5	11/22/10	11/23/10	RS	SW846 6010C [3]	SW846 3010A [5]
Silver	1.0 U	10	1.0	ug/l	1	11/22/10	11/22/10	RS	SW846 6010C [2]	SW846 3010A [5]

(1) Instrument QC Batch: MA8520
(2) Instrument QC Batch: MA8526
(3) Instrument QC Batch: MA8530
(4) Prep QC Batch: MP19507
(5) Prep QC Batch: MP19523

(a) Elevated reporting limit(s) due to matrix interference.

RL = Reporting Limit
MDL = Method Detection Limit

U = Indicates a result < MDL
B = Indicates a result > = MDL but < RL

Report of Analysis

Client Sample ID:	SD27-TTMW-01		
Lab Sample ID:	F78009-37	**Date Sampled:**	11/11/10
Matrix:	AQ - Ground Water	**Date Received:**	11/12/10
		Percent Solids:	n/a
Project:	Holloman AFB; Alamogordo, NM		

General Chemistry

Analyte	Result	RL	MDL	Units	DF	Analyzed	By	Method
Solids, Total Dissolved	21700	10000	1000	mg/l	100	11/12/10 08:15	LE	SM19 2540C

RL = Reporting Limit
MDL = Method Detection Limit

U = Indicates a result < MDL
B = Indicates a result > = MDL but < RL

Report of Analysis

Client Sample ID:	SD27-TTMW-01		
Lab Sample ID:	F78009-37F	**Date Sampled:**	11/11/10
Matrix:	AQ - Groundwater Filtered	**Date Received:**	11/12/10
		Percent Solids:	n/a
Project:	Holloman AFB; Alamogordo, NM		

Dissolved Metals Analysis

Analyte	Result	RL	MDL	Units	DF	Prep	Analyzed	By	Method	Prep Method
Arsenic [a]	8.0 U	40	8.0	ug/l	4	11/23/10	11/24/10	RS	SW846 6010C [3]	SW846 3010A [5]
Barium	48.9 B	200	5.0	ug/l	1	11/23/10	11/24/10	RS	SW846 6010C [2]	SW846 3010A [5]
Cadmium [a]	4.0 U	20	4.0	ug/l	4	11/23/10	11/24/10	RS	SW846 6010C [3]	SW846 3010A [5]
Chromium [a]	4.0 U	40	4.0	ug/l	4	11/23/10	11/24/10	RS	SW846 6010C [3]	SW846 3010A [5]
Lead [a]	4.0 U	20	4.0	ug/l	4	11/23/10	11/24/10	RS	SW846 6010C [3]	SW846 3010A [5]
Mercury	0.050 U	1.0	0.050	ug/l	1	11/19/10	11/19/10	LM	SW846 7470A [1]	SW846 7470A [4]
Selenium [a]	8.0 U	40	8.0	ug/l	4	11/23/10	11/24/10	RS	SW846 6010C [3]	SW846 3010A [5]
Silver	1.0 U	10	1.0	ug/l	1	11/23/10	11/24/10	RS	SW846 6010C [2]	SW846 3010A [5]

(1) Instrument QC Batch: MA8520
(2) Instrument QC Batch: MA8530
(3) Instrument QC Batch: MA8534
(4) Prep QC Batch: MP19508
(5) Prep QC Batch: MP19535

(a) Elevated reporting limit(s) due to matrix interference.

RL = Reporting Limit
MDL = Method Detection Limit

U = Indicates a result < MDL
B = Indicates a result > = MDL but < RL

Report of Analysis

Client Sample ID:	SD27-TB-11112010-C		
Lab Sample ID:	F78009-38	**Date Sampled:**	11/11/10
Matrix:	AQ - Trip Blank Water	**Date Received:**	11/12/10
Method:	SW846 8260B	**Percent Solids:**	n/a
Project:	Holloman AFB; Alamogordo, NM		

	File ID	DF	Analyzed	By	Prep Date	Prep Batch	Analytical Batch
Run #1 [a]	F046029.D	1	11/23/10	SH	n/a	n/a	VF1348
Run #2							

	Purge Volume
Run #1	5.0 ml
Run #2	

VOA Special List

CAS No.	Compound	Result	RL	MDL	Units	Q
67-64-1	Acetone [b]	ND	25	10	ug/l	
75-05-8	Acetonitrile	ND	20	5.0	ug/l	
107-02-8	Acrolein	ND	20	5.0	ug/l	
107-13-1	Acrylonitrile	ND	10	3.0	ug/l	
107-05-1	Allyl chloride	ND	2.0	0.30	ug/l	
71-43-2	Benzene	ND	1.0	0.20	ug/l	
100-44-7	Benzyl Chloride	ND	2.0	0.50	ug/l	
108-86-1	Bromobenzene	ND	1.0	0.25	ug/l	
74-97-5	Bromochloromethane	ND	1.0	0.22	ug/l	
75-27-4	Bromodichloromethane	ND	1.0	0.20	ug/l	
75-25-2	Bromoform	ND	1.0	0.20	ug/l	
104-51-8	n-Butylbenzene	ND	1.0	0.26	ug/l	
135-98-8	sec-Butylbenzene	ND	1.0	0.22	ug/l	
98-06-6	tert-Butylbenzene	ND	1.0	0.27	ug/l	
108-90-7	Chlorobenzene	ND	1.0	0.20	ug/l	
75-00-3	Chloroethane	ND	2.0	0.50	ug/l	
67-66-3	Chloroform	ND	1.0	0.22	ug/l	
544-10-5	1-Chlorohexane	ND	2.0	0.25	ug/l	
95-49-8	o-Chlorotoluene	ND	1.0	0.22	ug/l	
106-43-4	p-Chlorotoluene	ND	1.0	0.20	ug/l	
110-75-8	2-Chloroethyl vinyl ether	ND	5.0	1.2	ug/l	
75-15-0	Carbon disulfide	ND	2.0	0.50	ug/l	
56-23-5	Carbon tetrachloride	ND	1.0	0.25	ug/l	
75-34-3	1,1-Dichloroethane	ND	1.0	0.25	ug/l	
75-35-4	1,1-Dichloroethylene	ND	1.0	0.23	ug/l	
563-58-6	1,1-Dichloropropene	ND	1.0	0.28	ug/l	
96-12-8	1,2-Dibromo-3-chloropropane	ND	2.0	0.50	ug/l	
106-93-4	1,2-Dibromoethane	ND	1.0	0.37	ug/l	
107-06-2	1,2-Dichloroethane	ND	1.0	0.20	ug/l	
78-87-5	1,2-Dichloropropane	ND	1.0	0.25	ug/l	
142-28-9	1,3-Dichloropropane	ND	1.0	0.20	ug/l	
594-20-7	2,2-Dichloropropane	ND	1.0	0.44	ug/l	

ND = Not detected MDL - Method Detection Limit
RL = Reporting Limit
E = Indicates value exceeds calibration range

J = Indicates an estimated value
B = Indicates analyte found in associated method blank
N = Indicates presumptive evidence of a compound

Report of Analysis

Client Sample ID:	SD27-TB-11112010-C		
Lab Sample ID:	F78009-38	**Date Sampled:**	11/11/10
Matrix:	AQ - Trip Blank Water	**Date Received:**	11/12/10
Method:	SW846 8260B	**Percent Solids:**	n/a
Project:	Holloman AFB; Alamogordo, NM		

VOA Special List

CAS No.	Compound	Result	RL	MDL	Units	Q
124-48-1	Dibromochloromethane	ND	1.0	0.20	ug/l	
75-71-8	Dichlorodifluoromethane	ND	2.0	0.50	ug/l	
156-59-2	cis-1,2-Dichloroethylene	ND	1.0	0.26	ug/l	
10061-01-5	cis-1,3-Dichloropropene	ND	1.0	0.20	ug/l	
1476-11-5	cis-1,4-Dichloro-2-Butene	ND	10	1.0	ug/l	
541-73-1	m-Dichlorobenzene	ND	1.0	0.20	ug/l	
95-50-1	o-Dichlorobenzene	ND	1.0	0.25	ug/l	
106-46-7	p-Dichlorobenzene	ND	1.0	0.23	ug/l	
156-60-5	trans-1,2-Dichloroethylene	ND	1.0	0.35	ug/l	
10061-02-6	trans-1,3-Dichloropropene	ND	1.0	0.20	ug/l	
100-41-4	Ethylbenzene	ND	1.0	0.20	ug/l	
97-63-2	Ethyl methacrylate	ND	5.0	1.0	ug/l	
76-13-1	Freon 113	ND	1.0	0.47	ug/l	
591-78-6	2-Hexanone	ND	10	4.0	ug/l	
87-68-3	Hexachlorobutadiene	ND	2.0	0.80	ug/l	
110-54-3	Hexane	ND	2.0	0.59	ug/l	
98-82-8	Isopropylbenzene	ND	1.0	0.20	ug/l	
99-87-6	p-Isopropyltoluene	ND	1.0	0.21	ug/l	
108-10-1	4-Methyl-2-pentanone	ND	5.0	2.0	ug/l	
126-98-7	Methacrylonitrile	ND	20	5.0	ug/l	
74-83-9	Methyl bromide	ND	2.0	0.50	ug/l	
74-87-3	Methyl chloride	ND	2.0	0.50	ug/l	
74-88-4	Methyl iodide	ND	1.0	0.20	ug/l	
80-62-6	Methyl methacrylate	ND	5.0	1.0	ug/l	
74-95-3	Methylene bromide	ND	2.0	0.25	ug/l	
75-09-2	Methylene chloride [c]	4.5	5.0	2.0	ug/l	JB
78-93-3	Methyl ethyl ketone	ND	5.0	2.0	ug/l	
1634-04-4	Methyl Tert Butyl Ether	ND	1.0	0.34	ug/l	
91-20-3	Naphthalene	ND	5.0	1.0	ug/l	
76-01-7	Pentachloroethane	ND	10	2.0	ug/l	
107-12-0	Propionitrile	ND	20	5.0	ug/l	
103-65-1	n-Propylbenzene	ND	1.0	0.20	ug/l	
100-42-5	Styrene	ND	1.0	0.20	ug/l	
630-20-6	1,1,1,2-Tetrachloroethane	ND	1.0	0.20	ug/l	
71-55-6	1,1,1-Trichloroethane	ND	1.0	0.20	ug/l	
79-34-5	1,1,2,2-Tetrachloroethane	ND	1.0	0.23	ug/l	
79-00-5	1,1,2-Trichloroethane	ND	1.0	0.22	ug/l	
87-61-6	1,2,3-Trichlorobenzene	ND	1.0	0.50	ug/l	
96-18-4	1,2,3-Trichloropropane	ND	2.0	0.30	ug/l	
120-82-1	1,2,4-Trichlorobenzene	ND	1.0	0.50	ug/l	

ND = Not detected MDL - Method Detection Limit
RL = Reporting Limit
E = Indicates value exceeds calibration range

J = Indicates an estimated value
B = Indicates analyte found in associated method blank
N = Indicates presumptive evidence of a compound

Report of Analysis

Client Sample ID:	SD27-TB-11112010-C		
Lab Sample ID:	F78009-38	**Date Sampled:**	11/11/10
Matrix:	AQ - Trip Blank Water	**Date Received:**	11/12/10
Method:	SW846 8260B	**Percent Solids:**	n/a
Project:	Holloman AFB; Alamogordo, NM		

VOA Special List

CAS No.	Compound	Result	RL	MDL	Units	Q
95-63-6	1,2,4-Trimethylbenzene	ND	2.0	0.27	ug/l	
108-67-8	1,3,5-Trimethylbenzene	ND	2.0	0.21	ug/l	
127-18-4	Tetrachloroethylene	ND	1.0	0.25	ug/l	
108-88-3	Toluene	ND	1.0	0.20	ug/l	
79-01-6	Trichloroethylene	ND	1.0	0.26	ug/l	
75-69-4	Trichlorofluoromethane	ND	2.0	0.50	ug/l	
110-57-6	Trans-1,4-Dichloro-2-Butene	ND	10	2.0	ug/l	
75-01-4	Vinyl chloride [d]	ND	1.0	0.22	ug/l	
108-05-4	Vinyl Acetate	ND	10	2.0	ug/l	
	m,p-Xylene	ND	2.0	0.32	ug/l	
95-47-6	o-Xylene	ND	1.0	0.20	ug/l	

CAS No.	Surrogate Recoveries	Run# 1	Run# 2	Limits
1868-53-7	Dibromofluoromethane	106%		87-116%
17060-07-0	1,2-Dichloroethane-D4	93%		76-127%
2037-26-5	Toluene-D8	100%		86-112%
460-00-4	4-Bromofluorobenzene	91%		84-120%

(a) No sample available for reanalysis.
(b) Associated BS and ICV recovery outside control limits.
(c) Suspected laboratory contaminant.
(d) ICV outside of control limits.

ND = Not detected MDL - Method Detection Limit
RL = Reporting Limit
E = Indicates value exceeds calibration range

J = Indicates an estimated value
B = Indicates analyte found in associated method blank
N = Indicates presumptive evidence of a compound

Report of Analysis

Client Sample ID:	SD27-TB-11112010-C		
Lab Sample ID:	F78009-38	**Date Sampled:**	11/11/10
Matrix:	AQ - Trip Blank Water	**Date Received:**	11/12/10
Method:	SW846 8015C	**Percent Solids:**	n/a
Project:	Holloman AFB; Alamogordo, NM		

	File ID	DF	Analyzed	By	Prep Date	Prep Batch	Analytical Batch
Run #1	CD100633.D	1	11/19/10	WV	n/a	n/a	GCD4158
Run #2							

	Purge Volume
Run #1	5.0 ml
Run #2	

CAS No.	Compound	Result	RL	MDL	Units	Q
	TPH-GRO (C6-C10)	ND	0.10	0.050	mg/l	

CAS No.	Surrogate Recoveries	Run# 1	Run# 2	Limits
460-00-4	4-Bromofluorobenzene	97%		57-129%
98-08-8	aaa-Trifluorotoluene	86%		58-120%

ND = Not detected MDL - Method Detection Limit
RL = Reporting Limit
E = Indicates value exceeds calibration range

J = Indicates an estimated value
B = Indicates analyte found in associated method blank
N = Indicates presumptive evidence of a compound

Report of Analysis

Client Sample ID:	SD27-TB-11112010-D		
Lab Sample ID:	F78009-39	**Date Sampled:**	11/11/10
Matrix:	AQ - Trip Blank Water	**Date Received:**	11/12/10
Method:	SW846 8260B	**Percent Solids:**	n/a
Project:	Holloman AFB; Alamogordo, NM		

	File ID	DF	Analyzed	By	Prep Date	Prep Batch	Analytical Batch
Run #1 [a]	F046030.D	1	11/23/10	SH	n/a	n/a	VF1348
Run #2							

	Purge Volume
Run #1	5.0 ml
Run #2	

VOA Special List

CAS No.	Compound	Result	RL	MDL	Units	Q
67-64-1	Acetone [b]	ND	25	10	ug/l	
75-05-8	Acetonitrile	ND	20	5.0	ug/l	
107-02-8	Acrolein	ND	20	5.0	ug/l	
107-13-1	Acrylonitrile	ND	10	3.0	ug/l	
107-05-1	Allyl chloride	ND	2.0	0.30	ug/l	
71-43-2	Benzene	ND	1.0	0.20	ug/l	
100-44-7	Benzyl Chloride	ND	2.0	0.50	ug/l	
108-86-1	Bromobenzene	ND	1.0	0.25	ug/l	
74-97-5	Bromochloromethane	ND	1.0	0.22	ug/l	
75-27-4	Bromodichloromethane	ND	1.0	0.20	ug/l	
75-25-2	Bromoform	ND	1.0	0.20	ug/l	
104-51-8	n-Butylbenzene	ND	1.0	0.26	ug/l	
135-98-8	sec-Butylbenzene	ND	1.0	0.22	ug/l	
98-06-6	tert-Butylbenzene	ND	1.0	0.27	ug/l	
108-90-7	Chlorobenzene	ND	1.0	0.20	ug/l	
75-00-3	Chloroethane	ND	2.0	0.50	ug/l	
67-66-3	Chloroform	ND	1.0	0.22	ug/l	
544-10-5	1-Chlorohexane	ND	2.0	0.25	ug/l	
95-49-8	o-Chlorotoluene	ND	1.0	0.22	ug/l	
106-43-4	p-Chlorotoluene	ND	1.0	0.20	ug/l	
110-75-8	2-Chloroethyl vinyl ether	ND	5.0	1.2	ug/l	
75-15-0	Carbon disulfide	ND	2.0	0.50	ug/l	
56-23-5	Carbon tetrachloride	ND	1.0	0.25	ug/l	
75-34-3	1,1-Dichloroethane	ND	1.0	0.25	ug/l	
75-35-4	1,1-Dichloroethylene	ND	1.0	0.23	ug/l	
563-58-6	1,1-Dichloropropene	ND	1.0	0.28	ug/l	
96-12-8	1,2-Dibromo-3-chloropropane	ND	2.0	0.50	ug/l	
106-93-4	1,2-Dibromoethane	ND	1.0	0.37	ug/l	
107-06-2	1,2-Dichloroethane	ND	1.0	0.20	ug/l	
78-87-5	1,2-Dichloropropane	ND	1.0	0.25	ug/l	
142-28-9	1,3-Dichloropropane	ND	1.0	0.20	ug/l	
594-20-7	2,2-Dichloropropane	ND	1.0	0.44	ug/l	

ND = Not detected MDL - Method Detection Limit
RL = Reporting Limit
E = Indicates value exceeds calibration range

J = Indicates an estimated value
B = Indicates analyte found in associated method blank
N = Indicates presumptive evidence of a compound

Report of Analysis

Client Sample ID:	SD27-TB-11112010-D		
Lab Sample ID:	F78009-39	**Date Sampled:**	11/11/10
Matrix:	AQ - Trip Blank Water	**Date Received:**	11/12/10
Method:	SW846 8260B	**Percent Solids:**	n/a
Project:	Holloman AFB; Alamogordo, NM		

VOA Special List

CAS No.	Compound	Result	RL	MDL	Units	Q
124-48-1	Dibromochloromethane	ND	1.0	0.20	ug/l	
75-71-8	Dichlorodifluoromethane	ND	2.0	0.50	ug/l	
156-59-2	cis-1,2-Dichloroethylene	ND	1.0	0.26	ug/l	
10061-01-5	cis-1,3-Dichloropropene	ND	1.0	0.20	ug/l	
1476-11-5	cis-1,4-Dichloro-2-Butene	ND	10	1.0	ug/l	
541-73-1	m-Dichlorobenzene	ND	1.0	0.20	ug/l	
95-50-1	o-Dichlorobenzene	ND	1.0	0.25	ug/l	
106-46-7	p-Dichlorobenzene	ND	1.0	0.23	ug/l	
156-60-5	trans-1,2-Dichloroethylene	ND	1.0	0.35	ug/l	
10061-02-6	trans-1,3-Dichloropropene	ND	1.0	0.20	ug/l	
100-41-4	Ethylbenzene	ND	1.0	0.20	ug/l	
97-63-2	Ethyl methacrylate	ND	5.0	1.0	ug/l	
76-13-1	Freon 113	ND	1.0	0.47	ug/l	
591-78-6	2-Hexanone	ND	10	4.0	ug/l	
87-68-3	Hexachlorobutadiene	ND	2.0	0.80	ug/l	
110-54-3	Hexane	ND	2.0	0.59	ug/l	
98-82-8	Isopropylbenzene	ND	1.0	0.20	ug/l	
99-87-6	p-Isopropyltoluene	ND	1.0	0.21	ug/l	
108-10-1	4-Methyl-2-pentanone	ND	5.0	2.0	ug/l	
126-98-7	Methacrylonitrile	ND	20	5.0	ug/l	
74-83-9	Methyl bromide	ND	2.0	0.50	ug/l	
74-87-3	Methyl chloride	ND	2.0	0.50	ug/l	
74-88-4	Methyl iodide	ND	1.0	0.20	ug/l	
80-62-6	Methyl methacrylate	ND	5.0	1.0	ug/l	
74-95-3	Methylene bromide	ND	2.0	0.25	ug/l	
75-09-2	Methylene chloride [c]	4.6	5.0	2.0	ug/l	JB
78-93-3	Methyl ethyl ketone	ND	5.0	2.0	ug/l	
1634-04-4	Methyl Tert Butyl Ether	ND	1.0	0.34	ug/l	
91-20-3	Naphthalene	ND	5.0	1.0	ug/l	
76-01-7	Pentachloroethane	ND	10	2.0	ug/l	
107-12-0	Propionitrile	ND	20	5.0	ug/l	
103-65-1	n-Propylbenzene	ND	1.0	0.20	ug/l	
100-42-5	Styrene	ND	1.0	0.20	ug/l	
630-20-6	1,1,1,2-Tetrachloroethane	ND	1.0	0.20	ug/l	
71-55-6	1,1,1-Trichloroethane	ND	1.0	0.20	ug/l	
79-34-5	1,1,2,2-Tetrachloroethane	ND	1.0	0.23	ug/l	
79-00-5	1,1,2-Trichloroethane	ND	1.0	0.22	ug/l	
87-61-6	1,2,3-Trichlorobenzene	ND	1.0	0.50	ug/l	
96-18-4	1,2,3-Trichloropropane	ND	2.0	0.30	ug/l	
120-82-1	1,2,4-Trichlorobenzene	ND	1.0	0.50	ug/l	

ND = Not detected MDL - Method Detection Limit
RL = Reporting Limit
E = Indicates value exceeds calibration range

J = Indicates an estimated value
B = Indicates analyte found in associated method blank
N = Indicates presumptive evidence of a compound

Report of Analysis

Client Sample ID:	SD27-TB-11112010-D		
Lab Sample ID:	F78009-39	**Date Sampled:**	11/11/10
Matrix:	AQ - Trip Blank Water	**Date Received:**	11/12/10
Method:	SW846 8260B	**Percent Solids:**	n/a
Project:	Holloman AFB; Alamogordo, NM		

VOA Special List

CAS No.	Compound	Result	RL	MDL	Units	Q
95-63-6	1,2,4-Trimethylbenzene	ND	2.0	0.27	ug/l	
108-67-8	1,3,5-Trimethylbenzene	ND	2.0	0.21	ug/l	
127-18-4	Tetrachloroethylene	ND	1.0	0.25	ug/l	
108-88-3	Toluene	ND	1.0	0.20	ug/l	
79-01-6	Trichloroethylene	ND	1.0	0.26	ug/l	
75-69-4	Trichlorofluoromethane	ND	2.0	0.50	ug/l	
110-57-6	Trans-1,4-Dichloro-2-Butene	ND	10	2.0	ug/l	
75-01-4	Vinyl chloride [d]	ND	1.0	0.22	ug/l	
108-05-4	Vinyl Acetate	ND	10	2.0	ug/l	
	m,p-Xylene	ND	2.0	0.32	ug/l	
95-47-6	o-Xylene	ND	1.0	0.20	ug/l	

CAS No.	Surrogate Recoveries	Run# 1	Run# 2	Limits
1868-53-7	Dibromofluoromethane	107%		87-116%
17060-07-0	1,2-Dichloroethane-D4	93%		76-127%
2037-26-5	Toluene-D8	101%		86-112%
460-00-4	4-Bromofluorobenzene	90%		84-120%

(a) No sample available for reanalysis.
(b) Associated BS and ICV recovery outside control limits.
(c) Suspected laboratory contaminant.
(d) ICV outside of control limits.

ND = Not detected MDL - Method Detection Limit
RL = Reporting Limit
E = Indicates value exceeds calibration range

J = Indicates an estimated value
B = Indicates analyte found in associated method blank
N = Indicates presumptive evidence of a compound

Report of Analysis

Client Sample ID:	SD27-TB-11112010-D		
Lab Sample ID:	F78009-39	**Date Sampled:**	11/11/10
Matrix:	AQ - Trip Blank Water	**Date Received:**	11/12/10
Method:	SW846 8015C	**Percent Solids:**	n/a
Project:	Holloman AFB; Alamogordo, NM		

	File ID	DF	Analyzed	By	Prep Date	Prep Batch	Analytical Batch
Run #1	CD100634.D	1	11/19/10	WV	n/a	n/a	GCD4158
Run #2							

	Purge Volume
Run #1	5.0 ml
Run #2	

CAS No.	Compound	Result	RL	MDL	Units	Q
	TPH-GRO (C6-C10)	ND	0.10	0.050	mg/l	

CAS No.	Surrogate Recoveries	Run# 1	Run# 2	Limits
460-00-4	4-Bromofluorobenzene	91%		57-129%
98-08-8	aaa-Trifluorotoluene	83%		58-120%

ND = Not detected MDL - Method Detection Limit
RL = Reporting Limit
E = Indicates value exceeds calibration range

J = Indicates an estimated value
B = Indicates analyte found in associated method blank
N = Indicates presumptive evidence of a compound

Southeast ACCUTEST LABORATORIES

Misc. Forms

Custody Documents and Other Forms

Includes the following where applicable:

- Certification Exceptions
- Chain of Custody

Parameter Certification Exceptions

Job Number: F78009
Account: TETTNOAK Tetra Tech, Inc
Project: Holloman AFB; Alamogordo, NM

The following parameters included in this report are exceptions to NELAC certification.
The certification status of each is indicated below.

Parameter	CAS#	Method	Mat	Certification Status
Freon 113	76-13-1	**SW846 8260B**	AQ	Certified by SOP MS005

F78009

Tetra Tech, Inc.
800 Oak Ridge Turnpike, Ste A-500
Oak Ridge, TN 37830
865/283-9900

CHAIN-OF-CUSTODY

Laboratory Name: **Accutest Laboratories** Address: **4405 Vineland Rd. Suite C-15 Orlando, FL 32811** Contact: **Sue Bell (813/741-3338)**

Project Name: Holloman AFB, SD27 | Project Location: **Holloman AFB, New Mexico**
Project No.: 100-TEN-T93002-1 | Project Contact: **Maureen McMyler** | Site Telephone No.: **865/621-8754**
Report to: Maureen McMyler 800 Oak Ridge Turnpike 865/635-2038
Bill to: Sheila Hall, 800 Oak Ridge Turnpike 865/283-9900
Project Manager/Supervisor: **Mike Higgins**

Analysis and Method Desired

Item No.	Sample Number	Date	Time	Comp	Grab	Matrix	Sample Description, Location	Number of Containers	VOCs by SW8260B	TPH-GRO by SW8015B	Dry Weight Calculation	TPH-DRO by 8015B/Modified	RCRA Metals by SW6010B/ SW7471A	VOCs by SW8260B	SVOCs by SW8270C	TPH-DRO by 8015B/Modified	TPH-GRO by SW8015B	RCRA Metals by SW6010B/ SW7471A, Total	RCRA Metals by SW6010B/ SW7471A, Dissolved	TDS by 2540C	Remarks: Notes
1	SS39-DPT-05A	11/10/2010	1655		X	SO	SS39-DPT-05 Depth:4	5	X	X	X										
2	SS39-DPT-05B	11/10/2010	1700		X	SO	SS39-DPT-05 Depth:8	5	X	X	X										
3	SS39-DPT-05C	11/10/2010	1705		X	SO	SS39-DPT-05 Depth:11	5	X	X	X										
4	SS39-DPT-06A	11/10/2010	1735		X	SO	SS39-DPT-06 Depth:4	5	X	X	X										
5	SS39-DPT-06B	11/10/2010	1740		X	SO	SS39-DPT-06 Depth:8	5	X	X	X										
6	SS39-DPT-06C	11/10/2010	1745		X	SO	SS39-DPT-06 Depth:11	5	X	X	X										
7	SS39-DPT-07A	11/11/2010	750		X	SO	SS39-DPT-07 Depth:4	5	X	X	X										
8	SS39-DPT-07B	11/11/2010	755		X	SO	SS39-DPT-07 Depth:8	5	X	X	X										
9	SS39-DPT-07C	11/11/2010	800		X	SO	SS39-DPT-07 Depth:11	5	X	X	X										
10	SS39-DPT-08A	11/11/2010	825		X	SO	SS39-DPT-08 Depth:4	5	X	X	X										
11	SS39-DPT-08B	11/11/2010	830		X	SO	SS39-DPT-08 Depth:8	5	X	X	X										
12	SS39-DPT-08C	11/11/2010	835		X	SO	SS39-DPT-08 Depth:11	5	X	X	X										
13	SS39-DPT-09A	11/11/2010	850		X	SO	SS39-DPT-09 Depth:4	5	X	X	X										
14	SS39-DPT-09B	11/11/2010	855		X	SO	SS39-DPT-09 Depth:8	5	X	X	X										
15	SS39-DPT-09C	11/11/2010	900		X	SO	SS39-DPT-09 Depth:11	5	X	X	X										
16	SS39-DPT-10A	11/11/2010	905		X	SO	SD27-DPT-10 Depth:4	5	X	X	X										
17	SS39-DPT-10B	11/11/2010	910		X	SO	SS39-DPT-10 Depth:8	5	X	X	X										
18	SS39-DPT-10C	11/11/2010	915		X	SO	SS39-DPT-10 Depth:11	5	X	X	X										
19	SS39-DPT-11A	11/11/2010	1000		X	SO	SD27-DPT-11 Depth:4	5	X	X	X										
20	SS39-DPT-11B	11/11/2010	1005		X	SO	SS39-DPT-11 Depth:8	5	X	X	X										
21	SS39-DPT-11C	11/11/2010	1010		X	SO	SS39-DPT-11 Depth:11	5	X	X	X										
22	SS39-DPT-12A	11/11/2010	1015		X	SO	SD27-DPT-12 Depth:4	5	X	X	X										
23	SS39-DPT-12B	11/11/2010	1020		X	SO	SS39-DPT-12 Depth:8	5	X	X	X										
24	SS39-DPT-12C	11/11/2010	1025		X	SO	SS39-DPT-12 Depth:11	5	X	X	X										
25	SS39-DPT-13A	11/11/2010	1040		X	SO	SD27-DPT-13 Depth:4	5	X	X	X										
26	SS39-DPT-13B	11/11/2010	1045		X	SO	SS39-DPT-13 Depth:8	5	X	X	X										
27	SS39-DPT-13C	11/11/2010	1050		X	SO	SS39-DPT-13 Depth:11	5	X	X	X										
28	SS39-DPT-14A	11/11/2010	1100		X	SO	SD27-DPT-14 Depth:4	5	X	X	X										
29	SS39-DPT-14B	11/11/2010	1105		X	SO	SS39-DPT-14 Depth:8	5	X	X	X										
30	SS39-DPT-14C	11/11/2010	1110		X	SO	SS39-DPT-14 Depth:11	5	X	X	X										
31	SS39-DPT-DUP01	11/11/2010	800		X	SO	SS39-DPT-07 Depth:11	5	X	X	X										
32	SS39-DPT-DUP02	11/11/2010	915		X	SO	SS39-DPT-10 Depth:11	5	X	X	X										
33	SS39-DPT-DUP03	11/11/2010	1100		X	SO	SS39-DPT-14 Depth:4	5	X	X	X										
34	SS39-DPT-MS-12C	11/11/2010	1025		X	SO	SS39-DPT-MS-12 Depth:11	5	X	X	X										Matrix Spike
35	SS39-DPT-MSD-12C	11/11/2010	1025		X	SO	SS39-DPT-MSD-12 Depth:11	5	X	X	X										Matrix Spike Duplicate
36	SS39-TB-11112010-A	11/11/2010	1230		X	WQ	SS39-TB-11112010-A	4	X	X											
37	SS39-TB-11112010-B	11/11/2010	1230		X	WQ	SS39-TB-11112010-B	4	X	X											
38	SD27-TTMW-05	11/11/2010	850		X	GW	SD27-TTMW-05	13						X	X	X	X	X	X	X	
39	SD27-TTMW-01	11/11/2010	1005		X	GW	SD27-TTMW-01	13						X	X	X	X	X	X	X	
40	SD27-TTMW-MS-01	11/11/2010	1005		X	GW	SD27-TTMW-MS-01	13						X	X	X	X	X	X	X	Matrix Spike
41	SD27-TTMW-MSD-01	11/11/2010	1005		X	GW	SD27-TB-MSD-01	13						X	X	X	X	X	X	X	Matrix Spike Duplicate
42	SD27-TB-11112010-C	11/11/2010			X	WQ	027-TB-11112010-D	2	X	X											
43	SD27-TB-11102010-D	11/11/2010			X	WQ	SD27-TB-11112010-E	2	X	X											

Transfers Relinquished By (Signature)	Date/Time	Transfers Accepted By (Signature)	Date/Time	Special Instructions:
	11/11/10 1500			
				FedEx Airbill No.:
		Laboratory		Sampler's Signature

TAT: X Standard ____ Rush Due: _____ Seals intact? ____Y ____N Received Good Condition ____Y ____N ____Cold

2.8 3b, 1 6 2.6

4.2 4

F78009: Chain of Custody
Page 1 of 2

ACCUTEST LABORATORIES SAMPLE RECEIPT CONFIRMATION

ACCUTEST'S JOB NUMBER: F78009 CLIENT: Tetra Tech PROJECT: Holloman AFB

DATE/TIME RECEIVED: 11.12.10 09:00 {MM/DD/YY 24:00} NUMBER OF COOLERS RECEIVED: 4

METHOD OF DELIVERY: (FEDEX) UPS ACCUTEST COURIER GREYHOUND DELIVERY OTHER

AIRBILL NUMBERS:

COOLER INFORMATION

- [ ] CUSTODY SEAL NOT PRESENT OR NOT INTACT
- [ ] CHAIN OF CUSTODY NOT RECEIVED (COC)
- [ ] ANALYSIS REQUESTED IS UNCLEAR OR MISSING
- [ ] SAMPLE DATES OR TIMES UNCLEAR OR MISSING
- [ ] TEMPERATURE CRITERIA NOT MET
- [ ] WET ICE PRESENT

TRIP BLANK INFORMATION

- [X] TRIP BLANK PROVIDED
- [ ] TRIP BLANK NOT PROVIDED
- [ ] TRIP BLANK NOT ON COC
- [X] TRIP BLANK INTACT
- [ ] TRIP BLANK NOT INTACT
- [X] RECEIVED WATER TRIP BLANK
- [X] RECEIVED SOIL TRIP BLANK

MISC. INFORMATION

NUMBER OF ENCORES ? Ø

NUMBER OF 5035 FIELD KITS ? 35 + 2TB

NUMBER OR LAB FILTERED METALS ? 4

TEMPERATURE INFORMATION

- [ ] IR THERM ID 1 CORR. FACTOR -.2
- [ ] OBSERVED TEMPS: 2.8 3.8 4.0 2.8
- [ ] CORRECTED TEMPS: 2.6 2.6 3.6 2.8

SAMPLE INFORMATION

- [ ] SAMPLE LABELS PRESENT ON ALL BOTTLES
- [ ] INCORRECT NUMBER OF CONTAINERS USED
- [ ] SAMPLE RECEIVED IMPROPERLY PRESERVED
- [ ] INSUFFICIENT VOLUME FOR ANALYSIS
- [ ] DATES/TIMES ON COC DO NOT MATCH SAMPLE LABEL
- [ ] ID'S ON COC DO NOT MATCH LABEL
- [ ] VOC VIALS HAVE HEADSPACE (MACRO BUBBLES)
- [ ] BOTTLES RECEIVED BUT ANALYSIS NOT REQUESTED
- [ ] NO BOTTLES RECEIVED FOR ANALYSIS REQUESTED
- [ ] UNCLEAR FILTERING OR COMPOSITING INSTRUCTIONS
- [ ] SAMPLE CONTAINER(S) RECEIVED BROKEN
- [ ] % SOLIDS JAR NOT RECEIVED
- [ ] 5035 FIELD KIT FROZEN WITHIN 48 HOUR'S
- [ ] RESIDUAL CHLORINE PRESENT

{APPICABLE TO EPA 600 SERIES OR NORTH CAROLINA ORGANICS}

SUMMARY OF COMMENTS:

TECHNICIAN SIGNATURE/DATE ET 11.12.10 REVIEWER SIGNATURE/DATE JC 11-12-10

NF 10/09 RECEIPT CONFIRMATION 100609 (2).xls

4.2

4

F78009: Chain of Custody

Page 2 of 2

Southeast ACCUTEST LABORATORIES

GC/MS Volatiles

QC Data Summaries

Includes the following where applicable:

- Method Blank Summaries
- Blank Spike Summaries
- Matrix Spike and Duplicate Summaries
- Instrument Performance Checks (BFB)
- Internal Standard Area Summaries
- Surrogate Recovery Summaries
- Initial and Continuing Calibration Summaries

Method Blank Summary

Job Number: F78009
Account: TETTNOAK Tetra Tech, Inc
Project: Holloman AFB; Alamogordo, NM

Sample	File ID	DF	Analyzed	By	Prep Date	Prep Batch	Analytical Batch
VH2463-MB	H066138.D	1	11/18/10	MM	n/a	n/a	VH2463

The QC reported here applies to the following samples: **Method:** SW846 8260B

F78009-5, F78009-6, F78009-7, F78009-8, F78009-9, F78009-10, F78009-11, F78009-12

CAS No.	Compound	Result	RL	MDL	Units	Q
67-64-1	Acetone	ND	50	20	ug/kg	
75-05-8	Acetonitrile	ND	50	18	ug/kg	
107-02-8	Acrolein	ND	25	11	ug/kg	
107-13-1	Acrylonitrile	ND	25	11	ug/kg	
107-05-1	Allyl chloride	ND	25	5.0	ug/kg	
71-43-2	Benzene	ND	5.0	1.5	ug/kg	
100-44-7	Benzyl Chloride	ND	5.0	1.5	ug/kg	
108-86-1	Bromobenzene	ND	5.0	1.4	ug/kg	
74-97-5	Bromochloromethane	ND	5.0	1.4	ug/kg	
75-27-4	Bromodichloromethane	ND	5.0	1.1	ug/kg	
75-25-2	Bromoform	ND	5.0	1.5	ug/kg	
104-51-8	n-Butylbenzene	ND	5.0	1.3	ug/kg	
135-98-8	sec-Butylbenzene	ND	5.0	1.6	ug/kg	
98-06-6	tert-Butylbenzene	ND	5.0	1.2	ug/kg	
108-90-7	Chlorobenzene	ND	5.0	1.0	ug/kg	
75-00-3	Chloroethane	ND	5.0	2.0	ug/kg	
67-66-3	Chloroform	ND	5.0	1.2	ug/kg	
544-10-5	1-Chlorohexane	ND	5.0	1.4	ug/kg	
95-49-8	o-Chlorotoluene	ND	5.0	1.2	ug/kg	
106-43-4	p-Chlorotoluene	ND	5.0	1.2	ug/kg	
110-75-8	2-Chloroethyl vinyl ether	ND	25	10	ug/kg	
75-15-0	Carbon disulfide	ND	5.0	2.0	ug/kg	
56-23-5	Carbon tetrachloride	ND	5.0	1.8	ug/kg	
75-34-3	1,1-Dichloroethane	ND	5.0	1.1	ug/kg	
75-35-4	1,1-Dichloroethylene	ND	5.0	1.4	ug/kg	
563-58-6	1,1-Dichloropropene	ND	5.0	1.3	ug/kg	
96-12-8	1,2-Dibromo-3-chloropropane	ND	5.0	2.3	ug/kg	
106-93-4	1,2-Dibromoethane	ND	5.0	1.0	ug/kg	
107-06-2	1,2-Dichloroethane	ND	5.0	1.0	ug/kg	
78-87-5	1,2-Dichloropropane	ND	5.0	1.2	ug/kg	
142-28-9	1,3-Dichloropropane	ND	5.0	1.0	ug/kg	
594-20-7	2,2-Dichloropropane	ND	5.0	1.4	ug/kg	
124-48-1	Dibromochloromethane	ND	5.0	1.0	ug/kg	
75-71-8	Dichlorodifluoromethane	ND	5.0	1.5	ug/kg	
156-59-2	cis-1,2-Dichloroethylene	ND	5.0	1.5	ug/kg	
10061-01-5	cis-1,3-Dichloropropene	ND	5.0	1.0	ug/kg	

Method Blank Summary

Job Number: F78009
Account: TETTNOAK Tetra Tech, Inc
Project: Holloman AFB; Alamogordo, NM

Sample	File ID	DF	Analyzed	By	Prep Date	Prep Batch	Analytical Batch
VH2463-MB	H066138.D	1	11/18/10	MM	n/a	n/a	VH2463

The QC reported here applies to the following samples: **Method:** SW846 8260B

F78009-5, F78009-6, F78009-7, F78009-8, F78009-9, F78009-10, F78009-11, F78009-12

CAS No.	Compound	Result	RL	MDL	Units	Q
1476-11-5	cis-1,4-Dichloro-2-Butene	ND	25	5.0	ug/kg	
541-73-1	m-Dichlorobenzene	ND	5.0	1.2	ug/kg	
95-50-1	o-Dichlorobenzene	ND	5.0	1.1	ug/kg	
106-46-7	p-Dichlorobenzene	ND	5.0	1.1	ug/kg	
156-60-5	trans-1,2-Dichloroethylene	ND	5.0	1.5	ug/kg	
10061-02-6	trans-1,3-Dichloropropene	ND	5.0	1.1	ug/kg	
100-41-4	Ethylbenzene	ND	5.0	1.0	ug/kg	
97-63-2	Ethyl methacrylate	ND	25	5.0	ug/kg	
76-13-1	Freon 113	ND	5.0	1.7	ug/kg	
591-78-6	2-Hexanone	ND	25	5.4	ug/kg	
87-68-3	Hexachlorobutadiene	ND	5.0	2.0	ug/kg	
110-54-3	Hexane	ND	5.0	1.9	ug/kg	
98-82-8	Isopropylbenzene	ND	5.0	1.1	ug/kg	
99-87-6	p-Isopropyltoluene	ND	5.0	1.2	ug/kg	
108-10-1	4-Methyl-2-pentanone	ND	25	5.5	ug/kg	
126-98-7	Methacrylonitrile	ND	25	9.2	ug/kg	
74-83-9	Methyl bromide	ND	5.0	2.0	ug/kg	
74-87-3	Methyl chloride	ND	5.0	2.0	ug/kg	
74-88-4	Methyl iodide	ND	10	1.1	ug/kg	
80-62-6	Methyl methacrylate	ND	5.0	1.8	ug/kg	
74-95-3	Methylene bromide	ND	5.0	1.5	ug/kg	
75-09-2	Methylene chloride	ND	10	4.6	ug/kg	
78-93-3	Methyl ethyl ketone	ND	25	6.1	ug/kg	
1634-04-4	Methyl Tert Butyl Ether	ND	5.0	2.0	ug/kg	
91-20-3	Naphthalene	ND	5.0	2.0	ug/kg	
76-01-7	Pentachloroethane	ND	25	5.0	ug/kg	
107-12-0	Propionitrile	ND	50	16	ug/kg	
103-65-1	n-Propylbenzene	ND	5.0	1.4	ug/kg	
100-42-5	Styrene	ND	5.0	2.6	ug/kg	
630-20-6	1,1,1,2-Tetrachloroethane	ND	5.0	1.0	ug/kg	
71-55-6	1,1,1-Trichloroethane	ND	5.0	1.1	ug/kg	
79-34-5	1,1,2,2-Tetrachloroethane	ND	5.0	1.2	ug/kg	
79-00-5	1,1,2-Trichloroethane	ND	5.0	1.1	ug/kg	
87-61-6	1,2,3-Trichlorobenzene	ND	5.0	1.0	ug/kg	
96-18-4	1,2,3-Trichloropropane	ND	5.0	1.7	ug/kg	
120-82-1	1,2,4-Trichlorobenzene	ND	5.0	1.2	ug/kg	

Method Blank Summary

Job Number: F78009
Account: TETTNOAK Tetra Tech, Inc
Project: Holloman AFB; Alamogordo, NM

Sample	File ID	DF	Analyzed	By	Prep Date	Prep Batch	Analytical Batch
VH2463-MB	H066138.D	1	11/18/10	MM	n/a	n/a	VH2463

The QC reported here applies to the following samples: **Method:** SW846 8260B

F78009-5, F78009-6, F78009-7, F78009-8, F78009-9, F78009-10, F78009-11, F78009-12

CAS No.	Compound	Result	RL	MDL	Units	Q
95-63-6	1,2,4-Trimethylbenzene	ND	5.0	1.1	ug/kg	
108-67-8	1,3,5-Trimethylbenzene	ND	5.0	1.3	ug/kg	
127-18-4	Tetrachloroethylene	ND	5.0	1.0	ug/kg	
108-88-3	Toluene	ND	5.0	1.2	ug/kg	
79-01-6	Trichloroethylene	ND	5.0	1.2	ug/kg	
75-69-4	Trichlorofluoromethane	ND	5.0	2.0	ug/kg	
110-57-6	Trans-1,4-Dichloro-2-Butene	ND	25	5.0	ug/kg	
75-01-4	Vinyl chloride	ND	5.0	1.5	ug/kg	
108-05-4	Vinyl Acetate	ND	25	14	ug/kg	
	m,p-Xylene	ND	10	2.2	ug/kg	
95-47-6	o-Xylene	ND	5.0	1.0	ug/kg	

CAS No.	Surrogate Recoveries		Limits
1868-53-7	Dibromofluoromethane	98%	80-121%
2037-26-5	Toluene-D8	81%	71-130%
460-00-4	4-Bromofluorobenzene	97%	59-148%
17060-07-0	1,2-Dichloroethane-D4	99%	77-123%

Method Blank Summary

Job Number: F78009
Account: TETTNOAK Tetra Tech, Inc
Project: Holloman AFB; Alamogordo, NM

Sample	File ID	DF	Analyzed	By	Prep Date	Prep Batch	Analytical Batch
VG2581-MB	G0068558.D	1	11/18/10	MM	n/a	n/a	VG2581

The QC reported here applies to the following samples: **Method:** SW846 8260B

F78009-1, F78009-2, F78009-3, F78009-4

CAS No.	Compound	Result	RL	MDL	Units	Q
67-64-1	Acetone	ND	50	20	ug/kg	
75-05-8	Acetonitrile	ND	50	18	ug/kg	
107-02-8	Acrolein	ND	25	11	ug/kg	
107-13-1	Acrylonitrile	ND	25	11	ug/kg	
107-05-1	Allyl chloride	ND	25	5.0	ug/kg	
71-43-2	Benzene	ND	5.0	1.5	ug/kg	
100-44-7	Benzyl Chloride	ND	5.0	1.5	ug/kg	
108-86-1	Bromobenzene	ND	5.0	1.4	ug/kg	
74-97-5	Bromochloromethane	ND	5.0	1.4	ug/kg	
75-27-4	Bromodichloromethane	ND	5.0	1.1	ug/kg	
75-25-2	Bromoform	ND	5.0	1.5	ug/kg	
104-51-8	n-Butylbenzene	ND	5.0	1.3	ug/kg	
135-98-8	sec-Butylbenzene	ND	5.0	1.6	ug/kg	
98-06-6	tert-Butylbenzene	ND	5.0	1.2	ug/kg	
108-90-7	Chlorobenzene	ND	5.0	1.0	ug/kg	
75-00-3	Chloroethane	ND	5.0	2.0	ug/kg	
67-66-3	Chloroform	ND	5.0	1.2	ug/kg	
544-10-5	1-Chlorohexane	ND	5.0	1.4	ug/kg	
95-49-8	o-Chlorotoluene	ND	5.0	1.2	ug/kg	
106-43-4	p-Chlorotoluene	ND	5.0	1.2	ug/kg	
110-75-8	2-Chloroethyl vinyl ether	ND	25	10	ug/kg	
75-15-0	Carbon disulfide	ND	5.0	2.0	ug/kg	
56-23-5	Carbon tetrachloride	ND	5.0	1.8	ug/kg	
75-34-3	1,1-Dichloroethane	ND	5.0	1.1	ug/kg	
75-35-4	1,1-Dichloroethylene	ND	5.0	1.4	ug/kg	
563-58-6	1,1-Dichloropropene	ND	5.0	1.3	ug/kg	
96-12-8	1,2-Dibromo-3-chloropropane	ND	5.0	2.3	ug/kg	
106-93-4	1,2-Dibromoethane	ND	5.0	1.0	ug/kg	
107-06-2	1,2-Dichloroethane	ND	5.0	1.0	ug/kg	
78-87-5	1,2-Dichloropropane	ND	5.0	1.2	ug/kg	
142-28-9	1,3-Dichloropropane	ND	5.0	1.0	ug/kg	
594-20-7	2,2-Dichloropropane	ND	5.0	1.4	ug/kg	
124-48-1	Dibromochloromethane	ND	5.0	1.0	ug/kg	
75-71-8	Dichlorodifluoromethane	ND	5.0	1.5	ug/kg	
156-59-2	cis-1,2-Dichloroethylene	ND	5.0	1.5	ug/kg	
10061-01-5	cis-1,3-Dichloropropene	ND	5.0	1.0	ug/kg	

Method Blank Summary

Job Number: F78009
Account: TETTNOAK Tetra Tech, Inc
Project: Holloman AFB; Alamogordo, NM

Sample	File ID	DF	Analyzed	By	Prep Date	Prep Batch	Analytical Batch
VG2581-MB	G0068558.D	1	11/18/10	MM	n/a	n/a	VG2581

The QC reported here applies to the following samples: **Method:** SW846 8260B

F78009-1, F78009-2, F78009-3, F78009-4

CAS No.	Compound	Result	RL	MDL	Units	Q
1476-11-5	cis-1,4-Dichloro-2-Butene	ND	25	5.0	ug/kg	
541-73-1	m-Dichlorobenzene	ND	5.0	1.2	ug/kg	
95-50-1	o-Dichlorobenzene	ND	5.0	1.1	ug/kg	
106-46-7	p-Dichlorobenzene	ND	5.0	1.1	ug/kg	
156-60-5	trans-1,2-Dichloroethylene	ND	5.0	1.5	ug/kg	
10061-02-6	trans-1,3-Dichloropropene	ND	5.0	1.1	ug/kg	
100-41-4	Ethylbenzene	ND	5.0	1.0	ug/kg	
97-63-2	Ethyl methacrylate	ND	25	5.0	ug/kg	
76-13-1	Freon 113	ND	5.0	1.7	ug/kg	
591-78-6	2-Hexanone	ND	25	5.4	ug/kg	
87-68-3	Hexachlorobutadiene	ND	5.0	2.0	ug/kg	
110-54-3	Hexane	ND	5.0	1.9	ug/kg	
98-82-8	Isopropylbenzene	ND	5.0	1.1	ug/kg	
99-87-6	p-Isopropyltoluene	ND	5.0	1.2	ug/kg	
108-10-1	4-Methyl-2-pentanone	ND	25	5.5	ug/kg	
126-98-7	Methacrylonitrile	ND	25	9.2	ug/kg	
74-83-9	Methyl bromide	ND	5.0	2.0	ug/kg	
74-87-3	Methyl chloride	ND	5.0	2.0	ug/kg	
74-88-4	Methyl iodide	ND	10	1.1	ug/kg	
80-62-6	Methyl methacrylate	ND	5.0	1.8	ug/kg	
74-95-3	Methylene bromide	ND	5.0	1.5	ug/kg	
75-09-2	Methylene chloride	ND	10	4.6	ug/kg	
78-93-3	Methyl ethyl ketone	ND	25	6.1	ug/kg	
1634-04-4	Methyl Tert Butyl Ether	ND	5.0	2.0	ug/kg	
91-20-3	Naphthalene	ND	5.0	2.0	ug/kg	
76-01-7	Pentachloroethane	ND	25	5.0	ug/kg	
107-12-0	Propionitrile	ND	50	16	ug/kg	
103-65-1	n-Propylbenzene	ND	5.0	1.4	ug/kg	
100-42-5	Styrene	ND	5.0	2.6	ug/kg	
630-20-6	1,1,1,2-Tetrachloroethane	ND	5.0	1.0	ug/kg	
71-55-6	1,1,1-Trichloroethane	ND	5.0	1.1	ug/kg	
79-34-5	1,1,2,2-Tetrachloroethane	ND	5.0	1.2	ug/kg	
79-00-5	1,1,2-Trichloroethane	ND	5.0	1.1	ug/kg	
87-61-6	1,2,3-Trichlorobenzene	ND	5.0	1.0	ug/kg	
96-18-4	1,2,3-Trichloropropane	ND	5.0	1.7	ug/kg	
120-82-1	1,2,4-Trichlorobenzene	ND	5.0	1.2	ug/kg	

Method Blank Summary

Job Number: F78009
Account: TETTNOAK Tetra Tech, Inc
Project: Holloman AFB; Alamogordo, NM

Sample	File ID	DF	Analyzed	By	Prep Date	Prep Batch	Analytical Batch
VG2581-MB	G0068558.D	1	11/18/10	MM	n/a	n/a	VG2581

The QC reported here applies to the following samples: **Method:** SW846 8260B

F78009-1, F78009-2, F78009-3, F78009-4

CAS No.	Compound	Result	RL	MDL	Units	Q
95-63-6	1,2,4-Trimethylbenzene	ND	5.0	1.1	ug/kg	
108-67-8	1,3,5-Trimethylbenzene	ND	5.0	1.3	ug/kg	
127-18-4	Tetrachloroethylene	ND	5.0	1.0	ug/kg	
108-88-3	Toluene	ND	5.0	1.2	ug/kg	
79-01-6	Trichloroethylene	ND	5.0	1.2	ug/kg	
75-69-4	Trichlorofluoromethane	ND	5.0	2.0	ug/kg	
110-57-6	Trans-1,4-Dichloro-2-Butene	ND	25	5.0	ug/kg	
75-01-4	Vinyl chloride	ND	5.0	1.5	ug/kg	
108-05-4	Vinyl Acetate	ND	25	14	ug/kg	
	m,p-Xylene	ND	10	2.2	ug/kg	
95-47-6	o-Xylene	ND	5.0	1.0	ug/kg	

CAS No.	Surrogate Recoveries		Limits
1868-53-7	Dibromofluoromethane	106%	80-121%
2037-26-5	Toluene-D8	97%	71-130%
460-00-4	4-Bromofluorobenzene	100%	59-148%
17060-07-0	1,2-Dichloroethane-D4	104%	77-123%

Method Blank Summary

Job Number: F78009
Account: TETTNOAK Tetra Tech, Inc
Project: Holloman AFB; Alamogordo, NM

Sample	File ID	DF	Analyzed	By	Prep Date	Prep Batch	Analytical Batch
VG2582-MB	G0068588.D	1	11/19/10	MM	n/a	n/a	VG2582

The QC reported here applies to the following samples: **Method:** SW846 8260B

F78009-33, F78009-34, F78009-35

CAS No.	Compound	Result	RL	MDL	Units	Q
67-64-1	Acetone	ND	50	20	ug/kg	
75-05-8	Acetonitrile	ND	50	18	ug/kg	
107-02-8	Acrolein	ND	25	11	ug/kg	
107-13-1	Acrylonitrile	ND	25	11	ug/kg	
107-05-1	Allyl chloride	ND	25	5.0	ug/kg	
71-43-2	Benzene	ND	5.0	1.5	ug/kg	
100-44-7	Benzyl Chloride	ND	5.0	1.5	ug/kg	
108-86-1	Bromobenzene	ND	5.0	1.4	ug/kg	
74-97-5	Bromochloromethane	ND	5.0	1.4	ug/kg	
75-27-4	Bromodichloromethane	ND	5.0	1.1	ug/kg	
75-25-2	Bromoform	ND	5.0	1.5	ug/kg	
104-51-8	n-Butylbenzene	ND	5.0	1.3	ug/kg	
135-98-8	sec-Butylbenzene	ND	5.0	1.6	ug/kg	
98-06-6	tert-Butylbenzene	ND	5.0	1.2	ug/kg	
108-90-7	Chlorobenzene	ND	5.0	1.0	ug/kg	
75-00-3	Chloroethane	ND	5.0	2.0	ug/kg	
67-66-3	Chloroform	ND	5.0	1.2	ug/kg	
544-10-5	1-Chlorohexane	ND	5.0	1.4	ug/kg	
95-49-8	o-Chlorotoluene	ND	5.0	1.2	ug/kg	
106-43-4	p-Chlorotoluene	ND	5.0	1.2	ug/kg	
110-75-8	2-Chloroethyl vinyl ether	ND	25	10	ug/kg	
75-15-0	Carbon disulfide	ND	5.0	2.0	ug/kg	
56-23-5	Carbon tetrachloride	ND	5.0	1.8	ug/kg	
75-34-3	1,1-Dichloroethane	ND	5.0	1.1	ug/kg	
75-35-4	1,1-Dichloroethylene	ND	5.0	1.4	ug/kg	
563-58-6	1,1-Dichloropropene	ND	5.0	1.3	ug/kg	
96-12-8	1,2-Dibromo-3-chloropropane	ND	5.0	2.3	ug/kg	
106-93-4	1,2-Dibromoethane	ND	5.0	1.0	ug/kg	
107-06-2	1,2-Dichloroethane	ND	5.0	1.0	ug/kg	
78-87-5	1,2-Dichloropropane	ND	5.0	1.2	ug/kg	
142-28-9	1,3-Dichloropropane	ND	5.0	1.0	ug/kg	
594-20-7	2,2-Dichloropropane	ND	5.0	1.4	ug/kg	
124-48-1	Dibromochloromethane	ND	5.0	1.0	ug/kg	
75-71-8	Dichlorodifluoromethane	ND	5.0	1.5	ug/kg	
156-59-2	cis-1,2-Dichloroethylene	ND	5.0	1.5	ug/kg	
10061-01-5	cis-1,3-Dichloropropene	ND	5.0	1.0	ug/kg	

Method Blank Summary

Job Number: F78009
Account: TETTNOAK Tetra Tech, Inc
Project: Holloman AFB; Alamogordo, NM

Sample	File ID	DF	Analyzed	By	Prep Date	Prep Batch	Analytical Batch
VG2582-MB	G0068588.D	1	11/19/10	MM	n/a	n/a	VG2582

The QC reported here applies to the following samples: **Method:** SW846 8260B

F78009-33, F78009-34, F78009-35

CAS No.	Compound	Result	RL	MDL	Units	Q
1476-11-5	cis-1,4-Dichloro-2-Butene	ND	25	5.0	ug/kg	
541-73-1	m-Dichlorobenzene	ND	5.0	1.2	ug/kg	
95-50-1	o-Dichlorobenzene	ND	5.0	1.1	ug/kg	
106-46-7	p-Dichlorobenzene	ND	5.0	1.1	ug/kg	
156-60-5	trans-1,2-Dichloroethylene	ND	5.0	1.5	ug/kg	
10061-02-6	trans-1,3-Dichloropropene	ND	5.0	1.1	ug/kg	
100-41-4	Ethylbenzene	ND	5.0	1.0	ug/kg	
97-63-2	Ethyl methacrylate	ND	25	5.0	ug/kg	
76-13-1	Freon 113	ND	5.0	1.7	ug/kg	
591-78-6	2-Hexanone	ND	25	5.4	ug/kg	
87-68-3	Hexachlorobutadiene	ND	5.0	2.0	ug/kg	
110-54-3	Hexane	ND	5.0	1.9	ug/kg	
98-82-8	Isopropylbenzene	ND	5.0	1.1	ug/kg	
99-87-6	p-Isopropyltoluene	ND	5.0	1.2	ug/kg	
108-10-1	4-Methyl-2-pentanone	ND	25	5.5	ug/kg	
126-98-7	Methacrylonitrile	ND	25	9.2	ug/kg	
74-83-9	Methyl bromide	ND	5.0	2.0	ug/kg	
74-87-3	Methyl chloride	ND	5.0	2.0	ug/kg	
74-88-4	Methyl iodide	ND	10	1.1	ug/kg	
80-62-6	Methyl methacrylate	ND	5.0	1.8	ug/kg	
74-95-3	Methylene bromide	ND	5.0	1.5	ug/kg	
75-09-2	Methylene chloride	7.9	10	4.6	ug/kg	J
78-93-3	Methyl ethyl ketone	ND	25	6.1	ug/kg	
1634-04-4	Methyl Tert Butyl Ether	ND	5.0	2.0	ug/kg	
91-20-3	Naphthalene	ND	5.0	2.0	ug/kg	
76-01-7	Pentachloroethane	ND	25	5.0	ug/kg	
107-12-0	Propionitrile	ND	50	16	ug/kg	
103-65-1	n-Propylbenzene	ND	5.0	1.4	ug/kg	
100-42-5	Styrene	ND	5.0	2.6	ug/kg	
630-20-6	1,1,1,2-Tetrachloroethane	ND	5.0	1.0	ug/kg	
71-55-6	1,1,1-Trichloroethane	ND	5.0	1.1	ug/kg	
79-34-5	1,1,2,2-Tetrachloroethane	ND	5.0	1.2	ug/kg	
79-00-5	1,1,2-Trichloroethane	ND	5.0	1.1	ug/kg	
87-61-6	1,2,3-Trichlorobenzene	ND	5.0	1.0	ug/kg	
96-18-4	1,2,3-Trichloropropane	ND	5.0	1.7	ug/kg	
120-82-1	1,2,4-Trichlorobenzene	ND	5.0	1.2	ug/kg	

Method Blank Summary

Job Number: F78009
Account: TETTNOAK Tetra Tech, Inc
Project: Holloman AFB; Alamogordo, NM

Sample	File ID	DF	Analyzed	By	Prep Date	Prep Batch	Analytical Batch
VG2582-MB	G0068588.D	1	11/19/10	MM	n/a	n/a	VG2582

The QC reported here applies to the following samples: **Method:** SW846 8260B

F78009-33, F78009-34, F78009-35

CAS No.	Compound	Result	RL	MDL	Units	Q
95-63-6	1,2,4-Trimethylbenzene	ND	5.0	1.1	ug/kg	
108-67-8	1,3,5-Trimethylbenzene	ND	5.0	1.3	ug/kg	
127-18-4	Tetrachloroethylene	ND	5.0	1.0	ug/kg	
108-88-3	Toluene	ND	5.0	1.2	ug/kg	
79-01-6	Trichloroethylene	ND	5.0	1.2	ug/kg	
75-69-4	Trichlorofluoromethane	ND	5.0	2.0	ug/kg	
110-57-6	Trans-1,4-Dichloro-2-Butene	ND	25	5.0	ug/kg	
75-01-4	Vinyl chloride	ND	5.0	1.5	ug/kg	
108-05-4	Vinyl Acetate	ND	25	14	ug/kg	
	m,p-Xylene	ND	10	2.2	ug/kg	
95-47-6	o-Xylene	ND	5.0	1.0	ug/kg	

CAS No.	Surrogate Recoveries		Limits
1868-53-7	Dibromofluoromethane	104%	80-121%
2037-26-5	Toluene-D8	100%	71-130%
460-00-4	4-Bromofluorobenzene	100%	59-148%
17060-07-0	1,2-Dichloroethane-D4	101%	77-123%

Method Blank Summary

Job Number: F78009
Account: TETTNOAK Tetra Tech, Inc
Project: Holloman AFB; Alamogordo, NM

Sample	File ID	DF	Analyzed	By	Prep Date	Prep Batch	Analytical Batch
VH2464-MB	H066173.D	1	11/19/10	MM	n/a	n/a	VH2464

The QC reported here applies to the following samples: **Method:** SW846 8260B

F78009-13, F78009-14, F78009-15, F78009-16, F78009-17, F78009-21, F78009-25, F78009-27

CAS No.	Compound	Result	RL	MDL	Units	Q
67-64-1	Acetone	ND	50	20	ug/kg	
75-05-8	Acetonitrile	ND	50	18	ug/kg	
107-02-8	Acrolein	ND	25	11	ug/kg	
107-13-1	Acrylonitrile	ND	25	11	ug/kg	
107-05-1	Allyl chloride	ND	25	5.0	ug/kg	
71-43-2	Benzene	ND	5.0	1.5	ug/kg	
100-44-7	Benzyl Chloride	ND	5.0	1.5	ug/kg	
108-86-1	Bromobenzene	ND	5.0	1.4	ug/kg	
74-97-5	Bromochloromethane	ND	5.0	1.4	ug/kg	
75-27-4	Bromodichloromethane	ND	5.0	1.1	ug/kg	
75-25-2	Bromoform	ND	5.0	1.5	ug/kg	
104-51-8	n-Butylbenzene	ND	5.0	1.3	ug/kg	
135-98-8	sec-Butylbenzene	ND	5.0	1.6	ug/kg	
98-06-6	tert-Butylbenzene	ND	5.0	1.2	ug/kg	
108-90-7	Chlorobenzene	ND	5.0	1.0	ug/kg	
75-00-3	Chloroethane	ND	5.0	2.0	ug/kg	
67-66-3	Chloroform	ND	5.0	1.2	ug/kg	
544-10-5	1-Chlorohexane	ND	5.0	1.4	ug/kg	
95-49-8	o-Chlorotoluene	ND	5.0	1.2	ug/kg	
106-43-4	p-Chlorotoluene	ND	5.0	1.2	ug/kg	
110-75-8	2-Chloroethyl vinyl ether	ND	25	10	ug/kg	
75-15-0	Carbon disulfide	ND	5.0	2.0	ug/kg	
56-23-5	Carbon tetrachloride	ND	5.0	1.8	ug/kg	
75-34-3	1,1-Dichloroethane	ND	5.0	1.1	ug/kg	
75-35-4	1,1-Dichloroethylene	ND	5.0	1.4	ug/kg	
563-58-6	1,1-Dichloropropene	ND	5.0	1.3	ug/kg	
96-12-8	1,2-Dibromo-3-chloropropane	ND	5.0	2.3	ug/kg	
106-93-4	1,2-Dibromoethane	ND	5.0	1.0	ug/kg	
107-06-2	1,2-Dichloroethane	ND	5.0	1.0	ug/kg	
78-87-5	1,2-Dichloropropane	ND	5.0	1.2	ug/kg	
142-28-9	1,3-Dichloropropane	ND	5.0	1.0	ug/kg	
594-20-7	2,2-Dichloropropane	ND	5.0	1.4	ug/kg	
124-48-1	Dibromochloromethane	ND	5.0	1.0	ug/kg	
75-71-8	Dichlorodifluoromethane	ND	5.0	1.5	ug/kg	
156-59-2	cis-1,2-Dichloroethylene	ND	5.0	1.5	ug/kg	
10061-01-5	cis-1,3-Dichloropropene	ND	5.0	1.0	ug/kg	

Method Blank Summary

Job Number: F78009
Account: TETTNOAK Tetra Tech, Inc
Project: Holloman AFB; Alamogordo, NM

Sample	File ID	DF	Analyzed	By	Prep Date	Prep Batch	Analytical Batch
VH2464-MB	H066173.D	1	11/19/10	MM	n/a	n/a	VH2464

The QC reported here applies to the following samples: **Method:** SW846 8260B

F78009-13, F78009-14, F78009-15, F78009-16, F78009-17, F78009-21, F78009-25, F78009-27

CAS No.	Compound	Result	RL	MDL	Units	Q
1476-11-5	cis-1,4-Dichloro-2-Butene	ND	25	5.0	ug/kg	
541-73-1	m-Dichlorobenzene	ND	5.0	1.2	ug/kg	
95-50-1	o-Dichlorobenzene	ND	5.0	1.1	ug/kg	
106-46-7	p-Dichlorobenzene	ND	5.0	1.1	ug/kg	
156-60-5	trans-1,2-Dichloroethylene	ND	5.0	1.5	ug/kg	
10061-02-6	trans-1,3-Dichloropropene	ND	5.0	1.1	ug/kg	
100-41-4	Ethylbenzene	ND	5.0	1.0	ug/kg	
97-63-2	Ethyl methacrylate	ND	25	5.0	ug/kg	
76-13-1	Freon 113	ND	5.0	1.7	ug/kg	
591-78-6	2-Hexanone	ND	25	5.4	ug/kg	
87-68-3	Hexachlorobutadiene	ND	5.0	2.0	ug/kg	
110-54-3	Hexane	ND	5.0	1.9	ug/kg	
98-82-8	Isopropylbenzene	ND	5.0	1.1	ug/kg	
99-87-6	p-Isopropyltoluene	ND	5.0	1.2	ug/kg	
108-10-1	4-Methyl-2-pentanone	ND	25	5.5	ug/kg	
126-98-7	Methacrylonitrile	ND	25	9.2	ug/kg	
74-83-9	Methyl bromide	ND	5.0	2.0	ug/kg	
74-87-3	Methyl chloride	ND	5.0	2.0	ug/kg	
74-88-4	Methyl iodide	ND	10	1.1	ug/kg	
80-62-6	Methyl methacrylate	ND	5.0	1.8	ug/kg	
74-95-3	Methylene bromide	ND	5.0	1.5	ug/kg	
75-09-2	Methylene chloride	ND	10	4.6	ug/kg	
78-93-3	Methyl ethyl ketone	ND	25	6.1	ug/kg	
1634-04-4	Methyl Tert Butyl Ether	ND	5.0	2.0	ug/kg	
91-20-3	Naphthalene	ND	5.0	2.0	ug/kg	
76-01-7	Pentachloroethane	ND	25	5.0	ug/kg	
107-12-0	Propionitrile	ND	50	16	ug/kg	
103-65-1	n-Propylbenzene	ND	5.0	1.4	ug/kg	
100-42-5	Styrene	ND	5.0	2.6	ug/kg	
630-20-6	1,1,1,2-Tetrachloroethane	ND	5.0	1.0	ug/kg	
71-55-6	1,1,1-Trichloroethane	ND	5.0	1.1	ug/kg	
79-34-5	1,1,2,2-Tetrachloroethane	ND	5.0	1.2	ug/kg	
79-00-5	1,1,2-Trichloroethane	ND	5.0	1.1	ug/kg	
87-61-6	1,2,3-Trichlorobenzene	ND	5.0	1.0	ug/kg	
96-18-4	1,2,3-Trichloropropane	ND	5.0	1.7	ug/kg	
120-82-1	1,2,4-Trichlorobenzene	ND	5.0	1.2	ug/kg	

Method Blank Summary

Job Number: F78009
Account: TETTNOAK Tetra Tech, Inc
Project: Holloman AFB; Alamogordo, NM

Sample	File ID	DF	Analyzed	By	Prep Date	Prep Batch	Analytical Batch
VH2464-MB	H066173.D	1	11/19/10	MM	n/a	n/a	VH2464

The QC reported here applies to the following samples: **Method:** SW846 8260B

F78009-13, F78009-14, F78009-15, F78009-16, F78009-17, F78009-21, F78009-25, F78009-27

CAS No.	Compound	Result	RL	MDL	Units	Q
95-63-6	1,2,4-Trimethylbenzene	ND	5.0	1.1	ug/kg	
108-67-8	1,3,5-Trimethylbenzene	ND	5.0	1.3	ug/kg	
127-18-4	Tetrachloroethylene	ND	5.0	1.0	ug/kg	
108-88-3	Toluene	ND	5.0	1.2	ug/kg	
79-01-6	Trichloroethylene	ND	5.0	1.2	ug/kg	
75-69-4	Trichlorofluoromethane	ND	5.0	2.0	ug/kg	
110-57-6	Trans-1,4-Dichloro-2-Butene	ND	25	5.0	ug/kg	
75-01-4	Vinyl chloride	ND	5.0	1.5	ug/kg	
108-05-4	Vinyl Acetate	ND	25	14	ug/kg	
	m,p-Xylene	ND	10	2.2	ug/kg	
95-47-6	o-Xylene	ND	5.0	1.0	ug/kg	

CAS No.	Surrogate Recoveries		Limits
1868-53-7	Dibromofluoromethane	106%	80-121%
2037-26-5	Toluene-D8	79%	71-130%
460-00-4	4-Bromofluorobenzene	97%	59-148%
17060-07-0	1,2-Dichloroethane-D4	102%	77-123%

Method Blank Summary

Job Number: F78009
Account: TETTNOAK Tetra Tech, Inc
Project: Holloman AFB; Alamogordo, NM

Sample	File ID	DF	Analyzed	By	Prep Date	Prep Batch	Analytical Batch
VH2465-MB	H066217.D	1	11/20/10	MM	n/a	n/a	VH2465

The QC reported here applies to the following samples: **Method:** SW846 8260B

F78009-18, F78009-19, F78009-20, F78009-22, F78009-23, F78009-24, F78009-26, F78009-28, F78009-29, F78009-30, F78009-31, F78009-32

CAS No.	Compound	Result	RL	MDL	Units	Q
67-64-1	Acetone	ND	50	20	ug/kg	
75-05-8	Acetonitrile	ND	50	18	ug/kg	
107-02-8	Acrolein	ND	25	11	ug/kg	
107-13-1	Acrylonitrile	ND	25	11	ug/kg	
107-05-1	Allyl chloride	ND	25	5.0	ug/kg	
71-43-2	Benzene	ND	5.0	1.5	ug/kg	
100-44-7	Benzyl Chloride	ND	5.0	1.5	ug/kg	
108-86-1	Bromobenzene	ND	5.0	1.4	ug/kg	
74-97-5	Bromochloromethane	ND	5.0	1.4	ug/kg	
75-27-4	Bromodichloromethane	ND	5.0	1.1	ug/kg	
75-25-2	Bromoform	ND	5.0	1.5	ug/kg	
104-51-8	n-Butylbenzene	ND	5.0	1.3	ug/kg	
135-98-8	sec-Butylbenzene	ND	5.0	1.6	ug/kg	
98-06-6	tert-Butylbenzene	ND	5.0	1.2	ug/kg	
108-90-7	Chlorobenzene	ND	5.0	1.0	ug/kg	
75-00-3	Chloroethane	ND	5.0	2.0	ug/kg	
67-66-3	Chloroform	ND	5.0	1.2	ug/kg	
544-10-5	1-Chlorohexane	ND	5.0	1.4	ug/kg	
95-49-8	o-Chlorotoluene	ND	5.0	1.2	ug/kg	
106-43-4	p-Chlorotoluene	ND	5.0	1.2	ug/kg	
110-75-8	2-Chloroethyl vinyl ether	ND	25	10	ug/kg	
75-15-0	Carbon disulfide	ND	5.0	2.0	ug/kg	
56-23-5	Carbon tetrachloride	ND	5.0	1.8	ug/kg	
75-34-3	1,1-Dichloroethane	ND	5.0	1.1	ug/kg	
75-35-4	1,1-Dichloroethylene	ND	5.0	1.4	ug/kg	
563-58-6	1,1-Dichloropropene	ND	5.0	1.3	ug/kg	
96-12-8	1,2-Dibromo-3-chloropropane	ND	5.0	2.3	ug/kg	
106-93-4	1,2-Dibromoethane	ND	5.0	1.0	ug/kg	
107-06-2	1,2-Dichloroethane	ND	5.0	1.0	ug/kg	
78-87-5	1,2-Dichloropropane	ND	5.0	1.2	ug/kg	
142-28-9	1,3-Dichloropropane	ND	5.0	1.0	ug/kg	
594-20-7	2,2-Dichloropropane	ND	5.0	1.4	ug/kg	
124-48-1	Dibromochloromethane	ND	5.0	1.0	ug/kg	
75-71-8	Dichlorodifluoromethane	ND	5.0	1.5	ug/kg	
156-59-2	cis-1,2-Dichloroethylene	ND	5.0	1.5	ug/kg	
10061-01-5	cis-1,3-Dichloropropene	ND	5.0	1.0	ug/kg	

Method Blank Summary

Job Number: F78009
Account: TETTNOAK Tetra Tech, Inc
Project: Holloman AFB; Alamogordo, NM

Sample	File ID	DF	Analyzed	By	Prep Date	Prep Batch	Analytical Batch
VH2465-MB	H066217.D	1	11/20/10	MM	n/a	n/a	VH2465

The QC reported here applies to the following samples: **Method:** SW846 8260B

F78009-18, F78009-19, F78009-20, F78009-22, F78009-23, F78009-24, F78009-26, F78009-28, F78009-29, F78009-30, F78009-31, F78009-32

CAS No.	Compound	Result	RL	MDL	Units	Q
1476-11-5	cis-1,4-Dichloro-2-Butene	ND	25	5.0	ug/kg	
541-73-1	m-Dichlorobenzene	ND	5.0	1.2	ug/kg	
95-50-1	o-Dichlorobenzene	ND	5.0	1.1	ug/kg	
106-46-7	p-Dichlorobenzene	ND	5.0	1.1	ug/kg	
156-60-5	trans-1,2-Dichloroethylene	ND	5.0	1.5	ug/kg	
10061-02-6	trans-1,3-Dichloropropene	ND	5.0	1.1	ug/kg	
100-41-4	Ethylbenzene	ND	5.0	1.0	ug/kg	
97-63-2	Ethyl methacrylate	ND	25	5.0	ug/kg	
76-13-1	Freon 113	ND	5.0	1.7	ug/kg	
591-78-6	2-Hexanone	ND	25	5.4	ug/kg	
87-68-3	Hexachlorobutadiene	ND	5.0	2.0	ug/kg	
110-54-3	Hexane	ND	5.0	1.9	ug/kg	
98-82-8	Isopropylbenzene	ND	5.0	1.1	ug/kg	
99-87-6	p-Isopropyltoluene	ND	5.0	1.2	ug/kg	
108-10-1	4-Methyl-2-pentanone	ND	25	5.5	ug/kg	
126-98-7	Methacrylonitrile	ND	25	9.2	ug/kg	
74-83-9	Methyl bromide	ND	5.0	2.0	ug/kg	
74-87-3	Methyl chloride	ND	5.0	2.0	ug/kg	
74-88-4	Methyl iodide	ND	10	1.1	ug/kg	
80-62-6	Methyl methacrylate	ND	5.0	1.8	ug/kg	
74-95-3	Methylene bromide	ND	5.0	1.5	ug/kg	
75-09-2	Methylene chloride	11.3	10	4.6	ug/kg	
78-93-3	Methyl ethyl ketone	ND	25	6.1	ug/kg	
1634-04-4	Methyl Tert Butyl Ether	ND	5.0	2.0	ug/kg	
91-20-3	Naphthalene	ND	5.0	2.0	ug/kg	
76-01-7	Pentachloroethane	ND	25	5.0	ug/kg	
107-12-0	Propionitrile	ND	50	16	ug/kg	
103-65-1	n-Propylbenzene	ND	5.0	1.4	ug/kg	
100-42-5	Styrene	ND	5.0	2.6	ug/kg	
630-20-6	1,1,1,2-Tetrachloroethane	ND	5.0	1.0	ug/kg	
71-55-6	1,1,1-Trichloroethane	ND	5.0	1.1	ug/kg	
79-34-5	1,1,2,2-Tetrachloroethane	ND	5.0	1.2	ug/kg	
79-00-5	1,1,2-Trichloroethane	ND	5.0	1.1	ug/kg	
87-61-6	1,2,3-Trichlorobenzene	ND	5.0	1.0	ug/kg	
96-18-4	1,2,3-Trichloropropane	ND	5.0	1.7	ug/kg	
120-82-1	1,2,4-Trichlorobenzene	ND	5.0	1.2	ug/kg	

Method Blank Summary

Job Number: F78009
Account: TETTNOAK Tetra Tech, Inc
Project: Holloman AFB; Alamogordo, NM

Sample	File ID	DF	Analyzed	By	Prep Date	Prep Batch	Analytical Batch
VH2465-MB	H066217.D	1	11/20/10	MM	n/a	n/a	VH2465

The QC reported here applies to the following samples: **Method:** SW846 8260B

F78009-18, F78009-19, F78009-20, F78009-22, F78009-23, F78009-24, F78009-26, F78009-28, F78009-29, F78009-30, F78009-31, F78009-32

CAS No.	Compound	Result	RL	MDL	Units	Q
95-63-6	1,2,4-Trimethylbenzene	ND	5.0	1.1	ug/kg	
108-67-8	1,3,5-Trimethylbenzene	ND	5.0	1.3	ug/kg	
127-18-4	Tetrachloroethylene	ND	5.0	1.0	ug/kg	
108-88-3	Toluene	ND	5.0	1.2	ug/kg	
79-01-6	Trichloroethylene	ND	5.0	1.2	ug/kg	
75-69-4	Trichlorofluoromethane	ND	5.0	2.0	ug/kg	
110-57-6	Trans-1,4-Dichloro-2-Butene	ND	25	5.0	ug/kg	
75-01-4	Vinyl chloride	ND	5.0	1.5	ug/kg	
108-05-4	Vinyl Acetate	ND	25	14	ug/kg	
	m,p-Xylene	ND	10	2.2	ug/kg	
95-47-6	o-Xylene	ND	5.0	1.0	ug/kg	

CAS No.	Surrogate Recoveries		Limits
1868-53-7	Dibromofluoromethane	102%	80-121%
2037-26-5	Toluene-D8	82%	71-130%
460-00-4	4-Bromofluorobenzene	95%	59-148%
17060-07-0	1,2-Dichloroethane-D4	100%	77-123%

Method Blank Summary

Job Number: F78009
Account: TETTNOAK Tetra Tech, Inc
Project: Holloman AFB; Alamogordo, NM

Sample	File ID	DF	Analyzed	By	Prep Date	Prep Batch	Analytical Batch
VF1348-MB	F046025.D	1	11/23/10	SH	n/a	n/a	VF1348

The QC reported here applies to the following samples: **Method:** SW846 8260B

F78009-38, F78009-39

CAS No.	Compound	Result	RL	MDL	Units	Q
67-64-1	Acetone	ND	25	10	ug/l	
75-05-8	Acetonitrile	ND	20	5.0	ug/l	
107-02-8	Acrolein	ND	20	5.0	ug/l	
107-13-1	Acrylonitrile	ND	10	3.0	ug/l	
107-05-1	Allyl chloride	ND	2.0	0.30	ug/l	
71-43-2	Benzene	ND	1.0	0.20	ug/l	
100-44-7	Benzyl Chloride	ND	2.0	0.50	ug/l	
108-86-1	Bromobenzene	ND	1.0	0.25	ug/l	
74-97-5	Bromochloromethane	ND	1.0	0.22	ug/l	
75-27-4	Bromodichloromethane	ND	1.0	0.20	ug/l	
75-25-2	Bromoform	ND	1.0	0.20	ug/l	
104-51-8	n-Butylbenzene	ND	1.0	0.26	ug/l	
135-98-8	sec-Butylbenzene	ND	1.0	0.22	ug/l	
98-06-6	tert-Butylbenzene	ND	1.0	0.27	ug/l	
108-90-7	Chlorobenzene	ND	1.0	0.20	ug/l	
75-00-3	Chloroethane	ND	2.0	0.50	ug/l	
67-66-3	Chloroform	ND	1.0	0.22	ug/l	
544-10-5	1-Chlorohexane	ND	2.0	0.25	ug/l	
95-49-8	o-Chlorotoluene	ND	1.0	0.22	ug/l	
106-43-4	p-Chlorotoluene	ND	1.0	0.20	ug/l	
110-75-8	2-Chloroethyl vinyl ether	ND	5.0	1.2	ug/l	
75-15-0	Carbon disulfide	ND	2.0	0.50	ug/l	
56-23-5	Carbon tetrachloride	ND	1.0	0.25	ug/l	
75-34-3	1,1-Dichloroethane	ND	1.0	0.25	ug/l	
75-35-4	1,1-Dichloroethylene	ND	1.0	0.23	ug/l	
563-58-6	1,1-Dichloropropene	ND	1.0	0.28	ug/l	
96-12-8	1,2-Dibromo-3-chloropropane	ND	2.0	0.50	ug/l	
106-93-4	1,2-Dibromoethane	ND	1.0	0.37	ug/l	
107-06-2	1,2-Dichloroethane	ND	1.0	0.20	ug/l	
78-87-5	1,2-Dichloropropane	ND	1.0	0.25	ug/l	
142-28-9	1,3-Dichloropropane	ND	1.0	0.20	ug/l	
594-20-7	2,2-Dichloropropane	ND	1.0	0.44	ug/l	
124-48-1	Dibromochloromethane	ND	1.0	0.20	ug/l	
75-71-8	Dichlorodifluoromethane	ND	2.0	0.50	ug/l	
156-59-2	cis-1,2-Dichloroethylene	ND	1.0	0.26	ug/l	
10061-01-5	cis-1,3-Dichloropropene	ND	1.0	0.20	ug/l	

Method Blank Summary

Job Number: F78009
Account: TETTNOAK Tetra Tech, Inc
Project: Holloman AFB; Alamogordo, NM

Sample	File ID	DF	Analyzed	By	Prep Date	Prep Batch	Analytical Batch
VF1348-MB	F046025.D	1	11/23/10	SH	n/a	n/a	VF1348

The QC reported here applies to the following samples: **Method:** SW846 8260B

F78009-38, F78009-39

CAS No.	Compound	Result	RL	MDL	Units	Q
1476-11-5	cis-1,4-Dichloro-2-Butene	ND	10	1.0	ug/l	
541-73-1	m-Dichlorobenzene	ND	1.0	0.20	ug/l	
95-50-1	o-Dichlorobenzene	ND	1.0	0.25	ug/l	
106-46-7	p-Dichlorobenzene	ND	1.0	0.23	ug/l	
156-60-5	trans-1,2-Dichloroethylene	ND	1.0	0.35	ug/l	
10061-02-6	trans-1,3-Dichloropropene	ND	1.0	0.20	ug/l	
100-41-4	Ethylbenzene	ND	1.0	0.20	ug/l	
97-63-2	Ethyl methacrylate	ND	5.0	1.0	ug/l	
76-13-1	Freon 113	ND	1.0	0.47	ug/l	
591-78-6	2-Hexanone	ND	10	4.0	ug/l	
87-68-3	Hexachlorobutadiene	ND	2.0	0.80	ug/l	
110-54-3	Hexane	ND	2.0	0.59	ug/l	
98-82-8	Isopropylbenzene	ND	1.0	0.20	ug/l	
99-87-6	p-Isopropyltoluene	ND	1.0	0.21	ug/l	
108-10-1	4-Methyl-2-pentanone	ND	5.0	2.0	ug/l	
126-98-7	Methacrylonitrile	ND	20	5.0	ug/l	
74-83-9	Methyl bromide	ND	2.0	0.50	ug/l	
74-87-3	Methyl chloride	ND	2.0	0.50	ug/l	
74-88-4	Methyl iodide	ND	1.0	0.20	ug/l	
80-62-6	Methyl methacrylate	ND	5.0	1.0	ug/l	
74-95-3	Methylene bromide	ND	2.0	0.25	ug/l	
75-09-2	Methylene chloride	4.9	5.0	2.0	ug/l	J
78-93-3	Methyl ethyl ketone	ND	5.0	2.0	ug/l	
1634-04-4	Methyl Tert Butyl Ether	ND	1.0	0.34	ug/l	
91-20-3	Naphthalene	ND	5.0	1.0	ug/l	
76-01-7	Pentachloroethane	ND	10	2.0	ug/l	
107-12-0	Propionitrile	ND	20	5.0	ug/l	
103-65-1	n-Propylbenzene	ND	1.0	0.20	ug/l	
100-42-5	Styrene	ND	1.0	0.20	ug/l	
630-20-6	1,1,1,2-Tetrachloroethane	ND	1.0	0.20	ug/l	
71-55-6	1,1,1-Trichloroethane	ND	1.0	0.20	ug/l	
79-34-5	1,1,2,2-Tetrachloroethane	ND	1.0	0.23	ug/l	
79-00-5	1,1,2-Trichloroethane	ND	1.0	0.22	ug/l	
87-61-6	1,2,3-Trichlorobenzene	0.61	1.0	0.50	ug/l	J
96-18-4	1,2,3-Trichloropropane	ND	2.0	0.30	ug/l	
120-82-1	1,2,4-Trichlorobenzene	ND	1.0	0.50	ug/l	

Method Blank Summary

Job Number: F78009
Account: TETTNOAK Tetra Tech, Inc
Project: Holloman AFB; Alamogordo, NM

Sample	File ID	DF	Analyzed	By	Prep Date	Prep Batch	Analytical Batch
VF1348-MB	F046025.D	1	11/23/10	SH	n/a	n/a	VF1348

The QC reported here applies to the following samples: **Method:** SW846 8260B

F78009-38, F78009-39

CAS No.	Compound	Result	RL	MDL	Units	Q
95-63-6	1,2,4-Trimethylbenzene	ND	2.0	0.27	ug/l	
108-67-8	1,3,5-Trimethylbenzene	ND	2.0	0.21	ug/l	
127-18-4	Tetrachloroethylene	ND	1.0	0.25	ug/l	
108-88-3	Toluene	ND	1.0	0.20	ug/l	
79-01-6	Trichloroethylene	ND	1.0	0.26	ug/l	
75-69-4	Trichlorofluoromethane	ND	2.0	0.50	ug/l	
110-57-6	Trans-1,4-Dichloro-2-Butene	ND	10	2.0	ug/l	
75-01-4	Vinyl chloride	ND	1.0	0.22	ug/l	
108-05-4	Vinyl Acetate	ND	10	2.0	ug/l	
	m,p-Xylene	ND	2.0	0.32	ug/l	
95-47-6	o-Xylene	ND	1.0	0.20	ug/l	

CAS No.	Surrogate Recoveries		Limits
1868-53-7	Dibromofluoromethane	106%	87-116%
17060-07-0	1,2-Dichloroethane-D4	96%	76-127%
2037-26-5	Toluene-D8	100%	86-112%
460-00-4	4-Bromofluorobenzene	93%	84-120%

Method Blank Summary

Job Number: F78009
Account: TETTNOAK Tetra Tech, Inc
Project: Holloman AFB; Alamogordo, NM

Sample	File ID	DF	Analyzed	By	Prep Date	Prep Batch	Analytical Batch
VF1350-MB	F046055.D	1	11/24/10	SH	n/a	n/a	VF1350

The QC reported here applies to the following samples: **Method:** SW846 8260B

F78009-37

CAS No.	Compound	Result	RL	MDL	Units	Q
67-64-1	Acetone	ND	25	10	ug/l	
75-05-8	Acetonitrile	ND	20	5.0	ug/l	
107-02-8	Acrolein	ND	20	5.0	ug/l	
107-13-1	Acrylonitrile	ND	10	3.0	ug/l	
107-05-1	Allyl chloride	ND	2.0	0.30	ug/l	
71-43-2	Benzene	ND	1.0	0.20	ug/l	
100-44-7	Benzyl Chloride	ND	2.0	0.50	ug/l	
108-86-1	Bromobenzene	ND	1.0	0.25	ug/l	
74-97-5	Bromochloromethane	ND	1.0	0.22	ug/l	
75-27-4	Bromodichloromethane	ND	1.0	0.20	ug/l	
75-25-2	Bromoform	ND	1.0	0.20	ug/l	
104-51-8	n-Butylbenzene	ND	1.0	0.26	ug/l	
135-98-8	sec-Butylbenzene	ND	1.0	0.22	ug/l	
98-06-6	tert-Butylbenzene	ND	1.0	0.27	ug/l	
108-90-7	Chlorobenzene	ND	1.0	0.20	ug/l	
75-00-3	Chloroethane	ND	2.0	0.50	ug/l	
67-66-3	Chloroform	ND	1.0	0.22	ug/l	
544-10-5	1-Chlorohexane	ND	2.0	0.25	ug/l	
95-49-8	o-Chlorotoluene	ND	1.0	0.22	ug/l	
106-43-4	p-Chlorotoluene	ND	1.0	0.20	ug/l	
110-75-8	2-Chloroethyl vinyl ether	ND	5.0	1.2	ug/l	
75-15-0	Carbon disulfide	ND	2.0	0.50	ug/l	
56-23-5	Carbon tetrachloride	ND	1.0	0.25	ug/l	
75-34-3	1,1-Dichloroethane	ND	1.0	0.25	ug/l	
75-35-4	1,1-Dichloroethylene	ND	1.0	0.23	ug/l	
563-58-6	1,1-Dichloropropene	ND	1.0	0.28	ug/l	
96-12-8	1,2-Dibromo-3-chloropropane	ND	2.0	0.50	ug/l	
106-93-4	1,2-Dibromoethane	ND	1.0	0.37	ug/l	
107-06-2	1,2-Dichloroethane	ND	1.0	0.20	ug/l	
78-87-5	1,2-Dichloropropane	ND	1.0	0.25	ug/l	
142-28-9	1,3-Dichloropropane	ND	1.0	0.20	ug/l	
594-20-7	2,2-Dichloropropane	ND	1.0	0.44	ug/l	
124-48-1	Dibromochloromethane	ND	1.0	0.20	ug/l	
75-71-8	Dichlorodifluoromethane	ND	2.0	0.50	ug/l	
156-59-2	cis-1,2-Dichloroethylene	ND	1.0	0.26	ug/l	
10061-01-5	cis-1,3-Dichloropropene	ND	1.0	0.20	ug/l	

Method Blank Summary

Job Number: F78009
Account: TETTNOAK Tetra Tech, Inc
Project: Holloman AFB; Alamogordo, NM

Sample	File ID	DF	Analyzed	By	Prep Date	Prep Batch	Analytical Batch
VF1350-MB	F046055.D	1	11/24/10	SH	n/a	n/a	VF1350

The QC reported here applies to the following samples: **Method:** SW846 8260B

F78009-37

CAS No.	Compound	Result	RL	MDL	Units	Q
1476-11-5	cis-1,4-Dichloro-2-Butene	ND	10	1.0	ug/l	
541-73-1	m-Dichlorobenzene	ND	1.0	0.20	ug/l	
95-50-1	o-Dichlorobenzene	ND	1.0	0.25	ug/l	
106-46-7	p-Dichlorobenzene	ND	1.0	0.23	ug/l	
156-60-5	trans-1,2-Dichloroethylene	ND	1.0	0.35	ug/l	
10061-02-6	trans-1,3-Dichloropropene	ND	1.0	0.20	ug/l	
100-41-4	Ethylbenzene	ND	1.0	0.20	ug/l	
97-63-2	Ethyl methacrylate	ND	5.0	1.0	ug/l	
76-13-1	Freon 113	ND	1.0	0.47	ug/l	
591-78-6	2-Hexanone	ND	10	4.0	ug/l	
87-68-3	Hexachlorobutadiene	ND	2.0	0.80	ug/l	
110-54-3	Hexane	ND	2.0	0.59	ug/l	
98-82-8	Isopropylbenzene	ND	1.0	0.20	ug/l	
99-87-6	p-Isopropyltoluene	ND	1.0	0.21	ug/l	
108-10-1	4-Methyl-2-pentanone	ND	5.0	2.0	ug/l	
126-98-7	Methacrylonitrile	ND	20	5.0	ug/l	
74-83-9	Methyl bromide	ND	2.0	0.50	ug/l	
74-87-3	Methyl chloride	ND	2.0	0.50	ug/l	
74-88-4	Methyl iodide	ND	1.0	0.20	ug/l	
80-62-6	Methyl methacrylate	ND	5.0	1.0	ug/l	
74-95-3	Methylene bromide	ND	2.0	0.25	ug/l	
75-09-2	Methylene chloride	5.0	5.0	2.0	ug/l	
78-93-3	Methyl ethyl ketone	ND	5.0	2.0	ug/l	
1634-04-4	Methyl Tert Butyl Ether	ND	1.0	0.34	ug/l	
91-20-3	Naphthalene	ND	5.0	1.0	ug/l	
76-01-7	Pentachloroethane	ND	10	2.0	ug/l	
107-12-0	Propionitrile	ND	20	5.0	ug/l	
103-65-1	n-Propylbenzene	ND	1.0	0.20	ug/l	
100-42-5	Styrene	ND	1.0	0.20	ug/l	
630-20-6	1,1,1,2-Tetrachloroethane	ND	1.0	0.20	ug/l	
71-55-6	1,1,1-Trichloroethane	ND	1.0	0.20	ug/l	
79-34-5	1,1,2,2-Tetrachloroethane	ND	1.0	0.23	ug/l	
79-00-5	1,1,2-Trichloroethane	ND	1.0	0.22	ug/l	
87-61-6	1,2,3-Trichlorobenzene	ND	1.0	0.50	ug/l	
96-18-4	1,2,3-Trichloropropane	ND	2.0	0.30	ug/l	
120-82-1	1,2,4-Trichlorobenzene	ND	1.0	0.50	ug/l	

Method Blank Summary

Job Number: F78009
Account: TETTNOAK Tetra Tech, Inc
Project: Holloman AFB; Alamogordo, NM

Sample	File ID	DF	Analyzed	By	Prep Date	Prep Batch	Analytical Batch
VF1350-MB	F046055.D	1	11/24/10	SH	n/a	n/a	VF1350

The QC reported here applies to the following samples: **Method:** SW846 8260B

F78009-37

CAS No.	Compound	Result	RL	MDL	Units	Q
95-63-6	1,2,4-Trimethylbenzene	ND	2.0	0.27	ug/l	
108-67-8	1,3,5-Trimethylbenzene	ND	2.0	0.21	ug/l	
127-18-4	Tetrachloroethylene	ND	1.0	0.25	ug/l	
108-88-3	Toluene	ND	1.0	0.20	ug/l	
79-01-6	Trichloroethylene	ND	1.0	0.26	ug/l	
75-69-4	Trichlorofluoromethane	ND	2.0	0.50	ug/l	
110-57-6	Trans-1,4-Dichloro-2-Butene	ND	10	2.0	ug/l	
75-01-4	Vinyl chloride	ND	1.0	0.22	ug/l	
108-05-4	Vinyl Acetate	ND	10	2.0	ug/l	
	m,p-Xylene	ND	2.0	0.32	ug/l	
95-47-6	o-Xylene	ND	1.0	0.20	ug/l	

CAS No.	Surrogate Recoveries		Limits
1868-53-7	Dibromofluoromethane	104%	87-116%
17060-07-0	1,2-Dichloroethane-D4	96%	76-127%
2037-26-5	Toluene-D8	101%	86-112%
460-00-4	4-Bromofluorobenzene	101%	84-120%

Method Blank Summary

Job Number: F78009
Account: TETTNOAK Tetra Tech, Inc
Project: Holloman AFB; Alamogordo, NM

Sample	File ID	DF	Analyzed	By	Prep Date	Prep Batch	Analytical Batch
VF1353-MB	F046112.D	1	11/30/10	LD	n/a	n/a	VF1353

The QC reported here applies to the following samples: **Method:** SW846 8260B

F78009-36

CAS No.	Compound	Result	RL	MDL	Units	Q
67-64-1	Acetone	ND	25	10	ug/l	
75-05-8	Acetonitrile	ND	20	5.0	ug/l	
107-02-8	Acrolein	ND	20	5.0	ug/l	
107-13-1	Acrylonitrile	ND	10	3.0	ug/l	
107-05-1	Allyl chloride	ND	2.0	0.30	ug/l	
71-43-2	Benzene	ND	1.0	0.20	ug/l	
100-44-7	Benzyl Chloride	ND	2.0	0.50	ug/l	
108-86-1	Bromobenzene	ND	1.0	0.25	ug/l	
74-97-5	Bromochloromethane	ND	1.0	0.22	ug/l	
75-27-4	Bromodichloromethane	ND	1.0	0.20	ug/l	
75-25-2	Bromoform	ND	1.0	0.20	ug/l	
104-51-8	n-Butylbenzene	ND	1.0	0.26	ug/l	
135-98-8	sec-Butylbenzene	ND	1.0	0.22	ug/l	
98-06-6	tert-Butylbenzene	ND	1.0	0.27	ug/l	
108-90-7	Chlorobenzene	ND	1.0	0.20	ug/l	
75-00-3	Chloroethane	ND	2.0	0.50	ug/l	
67-66-3	Chloroform	ND	1.0	0.22	ug/l	
544-10-5	1-Chlorohexane	ND	2.0	0.25	ug/l	
95-49-8	o-Chlorotoluene	ND	1.0	0.22	ug/l	
106-43-4	p-Chlorotoluene	ND	1.0	0.20	ug/l	
110-75-8	2-Chloroethyl vinyl ether	ND	5.0	1.2	ug/l	
75-15-0	Carbon disulfide	ND	2.0	0.50	ug/l	
56-23-5	Carbon tetrachloride	ND	1.0	0.25	ug/l	
75-34-3	1,1-Dichloroethane	ND	1.0	0.25	ug/l	
75-35-4	1,1-Dichloroethylene	ND	1.0	0.23	ug/l	
563-58-6	1,1-Dichloropropene	ND	1.0	0.28	ug/l	
96-12-8	1,2-Dibromo-3-chloropropane	ND	2.0	0.50	ug/l	
106-93-4	1,2-Dibromoethane	ND	1.0	0.37	ug/l	
107-06-2	1,2-Dichloroethane	ND	1.0	0.20	ug/l	
78-87-5	1,2-Dichloropropane	ND	1.0	0.25	ug/l	
142-28-9	1,3-Dichloropropane	ND	1.0	0.20	ug/l	
594-20-7	2,2-Dichloropropane	ND	1.0	0.44	ug/l	
124-48-1	Dibromochloromethane	ND	1.0	0.20	ug/l	
75-71-8	Dichlorodifluoromethane	ND	2.0	0.50	ug/l	
156-59-2	cis-1,2-Dichloroethylene	ND	1.0	0.26	ug/l	
10061-01-5	cis-1,3-Dichloropropene	ND	1.0	0.20	ug/l	

Method Blank Summary

Job Number: F78009
Account: TETTNOAK Tetra Tech, Inc
Project: Holloman AFB; Alamogordo, NM

Sample	File ID	DF	Analyzed	By	Prep Date	Prep Batch	Analytical Batch
VF1353-MB	F046112.D	1	11/30/10	LD	n/a	n/a	VF1353

The QC reported here applies to the following samples: **Method:** SW846 8260B

F78009-36

CAS No.	Compound	Result	RL	MDL	Units	Q
1476-11-5	cis-1,4-Dichloro-2-Butene	ND	10	1.0	ug/l	
541-73-1	m-Dichlorobenzene	ND	1.0	0.20	ug/l	
95-50-1	o-Dichlorobenzene	ND	1.0	0.25	ug/l	
106-46-7	p-Dichlorobenzene	ND	1.0	0.23	ug/l	
156-60-5	trans-1,2-Dichloroethylene	ND	1.0	0.35	ug/l	
10061-02-6	trans-1,3-Dichloropropene	ND	1.0	0.20	ug/l	
100-41-4	Ethylbenzene	ND	1.0	0.20	ug/l	
97-63-2	Ethyl methacrylate	ND	5.0	1.0	ug/l	
76-13-1	Freon 113	ND	1.0	0.47	ug/l	
591-78-6	2-Hexanone	ND	10	4.0	ug/l	
87-68-3	Hexachlorobutadiene	ND	2.0	0.80	ug/l	
110-54-3	Hexane	ND	2.0	0.59	ug/l	
98-82-8	Isopropylbenzene	ND	1.0	0.20	ug/l	
99-87-6	p-Isopropyltoluene	ND	1.0	0.21	ug/l	
108-10-1	4-Methyl-2-pentanone	ND	5.0	2.0	ug/l	
126-98-7	Methacrylonitrile	ND	20	5.0	ug/l	
74-83-9	Methyl bromide	ND	2.0	0.50	ug/l	
74-87-3	Methyl chloride	ND	2.0	0.50	ug/l	
74-88-4	Methyl iodide	ND	1.0	0.20	ug/l	
80-62-6	Methyl methacrylate	ND	5.0	1.0	ug/l	
74-95-3	Methylene bromide	ND	2.0	0.25	ug/l	
75-09-2	Methylene chloride	ND	5.0	2.0	ug/l	
78-93-3	Methyl ethyl ketone	ND	5.0	2.0	ug/l	
1634-04-4	Methyl Tert Butyl Ether	ND	1.0	0.34	ug/l	
91-20-3	Naphthalene	ND	5.0	1.0	ug/l	
76-01-7	Pentachloroethane	ND	10	2.0	ug/l	
107-12-0	Propionitrile	ND	20	5.0	ug/l	
103-65-1	n-Propylbenzene	ND	1.0	0.20	ug/l	
100-42-5	Styrene	ND	1.0	0.20	ug/l	
630-20-6	1,1,1,2-Tetrachloroethane	ND	1.0	0.20	ug/l	
71-55-6	1,1,1-Trichloroethane	ND	1.0	0.20	ug/l	
79-34-5	1,1,2,2-Tetrachloroethane	ND	1.0	0.23	ug/l	
79-00-5	1,1,2-Trichloroethane	ND	1.0	0.22	ug/l	
87-61-6	1,2,3-Trichlorobenzene	ND	1.0	0.50	ug/l	
96-18-4	1,2,3-Trichloropropane	ND	2.0	0.30	ug/l	
120-82-1	1,2,4-Trichlorobenzene	ND	1.0	0.50	ug/l	

Method Blank Summary

Job Number: F78009
Account: TETTNOAK Tetra Tech, Inc
Project: Holloman AFB; Alamogordo, NM

Sample	File ID	DF	Analyzed	By	Prep Date	Prep Batch	Analytical Batch
VF1353-MB	F046112.D	1	11/30/10	LD	n/a	n/a	VF1353

The QC reported here applies to the following samples: **Method:** SW846 8260B

F78009-36

CAS No.	Compound	Result	RL	MDL	Units	Q
95-63-6	1,2,4-Trimethylbenzene	ND	2.0	0.27	ug/l	
108-67-8	1,3,5-Trimethylbenzene	ND	2.0	0.21	ug/l	
127-18-4	Tetrachloroethylene	ND	1.0	0.25	ug/l	
108-88-3	Toluene	ND	1.0	0.20	ug/l	
79-01-6	Trichloroethylene	ND	1.0	0.26	ug/l	
75-69-4	Trichlorofluoromethane	ND	2.0	0.50	ug/l	
110-57-6	Trans-1,4-Dichloro-2-Butene	ND	10	2.0	ug/l	
75-01-4	Vinyl chloride	ND	1.0	0.22	ug/l	
108-05-4	Vinyl Acetate	ND	10	2.0	ug/l	
	m,p-Xylene	ND	2.0	0.32	ug/l	
95-47-6	o-Xylene	ND	1.0	0.20	ug/l	

CAS No.	Surrogate Recoveries		Limits
1868-53-7	Dibromofluoromethane	105%	87-116%
17060-07-0	1,2-Dichloroethane-D4	96%	76-127%
2037-26-5	Toluene-D8	102%	86-112%
460-00-4	4-Bromofluorobenzene	96%	84-120%

Blank Spike Summary

Job Number: F78009
Account: TETTNOAK Tetra Tech, Inc
Project: Holloman AFB; Alamogordo, NM

Sample	File ID	DF	Analyzed	By	Prep Date	Prep Batch	Analytical Batch
VH2463-BS	H066137.D	1	11/18/10	MM	n/a	n/a	VH2463

The QC reported here applies to the following samples: **Method:** SW846 8260B

F78009-5, F78009-6, F78009-7, F78009-8, F78009-9, F78009-10, F78009-11, F78009-12

CAS No.	Compound	Spike ug/kg	BSP ug/kg	BSP %	Limits
67-64-1	Acetone	250	173	69	61-144
75-05-8	Acetonitrile	500	629	126	59-139
107-02-8	Acrolein	250	243	97	27-156
107-13-1	Acrylonitrile	250	324	130	55-144
107-05-1	Allyl chloride	50	65.4	131	41-152
71-43-2	Benzene	50	53.5	107	78-130
100-44-7	Benzyl Chloride	50	50.4	101	74-130
108-86-1	Bromobenzene	50	55.7	111	78-123
74-97-5	Bromochloromethane	50	51.2	102	72-122
75-27-4	Bromodichloromethane	50	53.3	107	73-122
75-25-2	Bromoform	50	46.0	92	70-139
104-51-8	n-Butylbenzene	50	58.1	116	80-138
135-98-8	sec-Butylbenzene	50	56.3	113	82-132
98-06-6	tert-Butylbenzene	50	56.0	112	79-130
108-90-7	Chlorobenzene	50	54.0	108	83-122
75-00-3	Chloroethane	50	66.0	132	61-153
67-66-3	Chloroform	50	53.9	108	79-129
544-10-5	1-Chlorohexane	50	56.0	112	85-137
95-49-8	o-Chlorotoluene	50	54.4	109	77-123
106-43-4	p-Chlorotoluene	50	55.8	112	78-129
110-75-8	2-Chloroethyl vinyl ether	250	235	94	52-142
75-15-0	Carbon disulfide	50	56.8	114	61-142
56-23-5	Carbon tetrachloride	50	54.2	108	79-135
75-34-3	1,1-Dichloroethane	50	63.1	126	77-132
75-35-4	1,1-Dichloroethylene	50	59.0	118	66-132
563-58-6	1,1-Dichloropropene	50	54.9	110	81-133
96-12-8	1,2-Dibromo-3-chloropropane	50	43.3	87	67-129
106-93-4	1,2-Dibromoethane	50	42.7	85	77-126
107-06-2	1,2-Dichloroethane	50	52.8	106	78-129
78-87-5	1,2-Dichloropropane	50	52.4	105	74-127
142-28-9	1,3-Dichloropropane	50	43.3	87	78-118
594-20-7	2,2-Dichloropropane	50	54.2	108	80-137
124-48-1	Dibromochloromethane	50	44.7	89	78-117
75-71-8	Dichlorodifluoromethane	50	126	252*	35-162
156-59-2	cis-1,2-Dichloroethylene	50	58.4	117	74-123
10061-01-5	cis-1,3-Dichloropropene	50	55.3	111	79-130

Blank Spike Summary

Job Number: F78009
Account: TETTNOAK Tetra Tech, Inc
Project: Holloman AFB; Alamogordo, NM

Sample	File ID	DF	Analyzed	By	Prep Date	Prep Batch	Analytical Batch
VH2463-BS	H066137.D	1	11/18/10	MM	n/a	n/a	VH2463

The QC reported here applies to the following samples: **Method:** SW846 8260B

F78009-5, F78009-6, F78009-7, F78009-8, F78009-9, F78009-10, F78009-11, F78009-12

CAS No.	Compound	Spike ug/kg	BSP ug/kg	BSP %	Limits
1476-11-5	cis-1,4-Dichloro-2-Butene	50	45.8	92	71-126
541-73-1	m-Dichlorobenzene	50	56.1	112	82-126
95-50-1	o-Dichlorobenzene	50	54.0	108	83-123
106-46-7	p-Dichlorobenzene	50	54.4	109	84-124
156-60-5	trans-1,2-Dichloroethylene	50	63.6	127	77-129
10061-02-6	trans-1,3-Dichloropropene	50	48.5	97	87-131
100-41-4	Ethylbenzene	50	52.8	106	82-124
97-63-2	Ethyl methacrylate	50	40.6	81	78-118
76-13-1	Freon 113	50	66.6	133	62-147
591-78-6	2-Hexanone	250	187	75	67-130
87-68-3	Hexachlorobutadiene	50	64.2	128	77-150
110-54-3	Hexane	50	75.4	151*	65-147
98-82-8	Isopropylbenzene	50	60.2	120	82-133
99-87-6	p-Isopropyltoluene	50	59.2	118	82-132
108-10-1	4-Methyl-2-pentanone	250	231	92	69-125
126-98-7	Methacrylonitrile	500	598	120	70-138
74-83-9	Methyl bromide	50	72.2	144	60-146
74-87-3	Methyl chloride	50	80.4	161	58-163
74-88-4	Methyl iodide	50	63.4	127	66-128
80-62-6	Methyl methacrylate	50	51.9	104	73-125
74-95-3	Methylene bromide	50	53.9	108	75-128
75-09-2	Methylene chloride	50	102	204*	62-140
78-93-3	Methyl ethyl ketone	250	182	73	66-134
1634-04-4	Methyl Tert Butyl Ether	50	63.3	127	70-131
91-20-3	Naphthalene	50	49.7	99	59-143
76-01-7	Pentachloroethane	50	56.7	113	64-156
107-12-0	Propionitrile	500	553	111	73-133
103-65-1	n-Propylbenzene	50	56.5	113	78-129
100-42-5	Styrene	50	52.9	106	79-123
630-20-6	1,1,1,2-Tetrachloroethane	50	53.3	107	81-121
71-55-6	1,1,1-Trichloroethane	50	52.9	106	80-133
79-34-5	1,1,2,2-Tetrachloroethane	50	50.0	100	70-128
79-00-5	1,1,2-Trichloroethane	50	43.8	88	76-118
87-61-6	1,2,3-Trichlorobenzene	50	55.2	110	78-136
96-18-4	1,2,3-Trichloropropane	50	47.2	94	74-125
120-82-1	1,2,4-Trichlorobenzene	50	58.9	118	82-137

Blank Spike Summary

Job Number: F78009
Account: TETTNOAK Tetra Tech, Inc
Project: Holloman AFB; Alamogordo, NM

Sample	File ID	DF	Analyzed	By	Prep Date	Prep Batch	Analytical Batch
VH2463-BS	H066137.D	1	11/18/10	MM	n/a	n/a	VH2463

The QC reported here applies to the following samples: **Method:** SW846 8260B

F78009-5, F78009-6, F78009-7, F78009-8, F78009-9, F78009-10, F78009-11, F78009-12

CAS No.	Compound	Spike ug/kg	BSP ug/kg	BSP %	Limits
95-63-6	1,2,4-Trimethylbenzene	50	56.3	113	77-129
108-67-8	1,3,5-Trimethylbenzene	50	56.3	113	79-129
127-18-4	Tetrachloroethylene	50	56.0	112	79-132
108-88-3	Toluene	50	51.0	102	80-123
79-01-6	Trichloroethylene	50	54.7	109	78-132
75-69-4	Trichlorofluoromethane	50	73.1	146	67-149
110-57-6	Trans-1,4-Dichloro-2-Butene	50	49.3	99	74-138
75-01-4	Vinyl chloride	50	65.1	130	60-145
108-05-4	Vinyl Acetate	250	319	128	25-164
	m,p-Xylene	100	109	109	82-128
95-47-6	o-Xylene	50	53.1	106	82-126

CAS No.	Surrogate Recoveries	BSP	Limits
1868-53-7	Dibromofluoromethane	101%	80-121%
2037-26-5	Toluene-D8	89%	71-130%
460-00-4	4-Bromofluorobenzene	101%	59-148%
17060-07-0	1,2-Dichloroethane-D4	110%	77-123%

Blank Spike Summary

Job Number: F78009
Account: TETTNOAK Tetra Tech, Inc
Project: Holloman AFB; Alamogordo, NM

Sample	File ID	DF	Analyzed	By	Prep Date	Prep Batch	Analytical Batch
VG2581-BS	G0068549.D	1	11/18/10	MM	n/a	n/a	VG2581

The QC reported here applies to the following samples: **Method:** SW846 8260B

F78009-1, F78009-2, F78009-3, F78009-4

CAS No.	Compound	Spike ug/kg	BSP ug/kg	BSP %	Limits
67-64-1	Acetone	250	126	50*	61-144
75-05-8	Acetonitrile	500	423	85	59-139
107-02-8	Acrolein	250	225	90	27-156
107-13-1	Acrylonitrile	250	196	78	55-144
107-05-1	Allyl chloride	50	54.3	109	41-152
71-43-2	Benzene	50	52.0	104	78-130
100-44-7	Benzyl Chloride	50	48.7	97	74-130
108-86-1	Bromobenzene	50	52.6	105	78-123
74-97-5	Bromochloromethane	50	47.0	94	72-122
75-27-4	Bromodichloromethane	50	50.2	100	73-122
75-25-2	Bromoform	50	47.0	94	70-139
104-51-8	n-Butylbenzene	50	50.6	101	80-138
135-98-8	sec-Butylbenzene	50	59.2	118	82-132
98-06-6	tert-Butylbenzene	50	56.0	112	79-130
108-90-7	Chlorobenzene	50	52.2	104	83-122
75-00-3	Chloroethane	50	72.1	144	61-153
67-66-3	Chloroform	50	52.9	106	79-129
544-10-5	1-Chlorohexane	50	46.9	94	85-137
95-49-8	o-Chlorotoluene	50	54.7	109	77-123
106-43-4	p-Chlorotoluene	50	54.4	109	78-129
110-75-8	2-Chloroethyl vinyl ether	250	257	103	52-142
75-15-0	Carbon disulfide	50	49.9	100	61-142
56-23-5	Carbon tetrachloride	50	60.1	120	79-135
75-34-3	1,1-Dichloroethane	50	49.5	99	77-132
75-35-4	1,1-Dichloroethylene	50	49.8	100	66-132
563-58-6	1,1-Dichloropropene	50	55.7	111	81-133
96-12-8	1,2-Dibromo-3-chloropropane	50	44.8	90	67-129
106-93-4	1,2-Dibromoethane	50	45.7	91	77-126
107-06-2	1,2-Dichloroethane	50	51.8	104	78-129
78-87-5	1,2-Dichloropropane	50	47.7	95	74-127
142-28-9	1,3-Dichloropropane	50	43.8	88	78-118
594-20-7	2,2-Dichloropropane	50	55.3	111	80-137
124-48-1	Dibromochloromethane	50	48.6	97	78-117
75-71-8	Dichlorodifluoromethane	50	79.2	158	35-162
156-59-2	cis-1,2-Dichloroethylene	50	51.5	103	74-123
10061-01-5	cis-1,3-Dichloropropene	50	51.6	103	79-130

Blank Spike Summary

Job Number: F78009
Account: TETTNOAK Tetra Tech, Inc
Project: Holloman AFB; Alamogordo, NM

Sample	File ID	DF	Analyzed	By	Prep Date	Prep Batch	Analytical Batch
VG2581-BS	G0068549.D	1	11/18/10	MM	n/a	n/a	VG2581

The QC reported here applies to the following samples: **Method:** SW846 8260B

F78009-1, F78009-2, F78009-3, F78009-4

CAS No.	Compound	Spike ug/kg	BSP ug/kg	BSP %	Limits
1476-11-5	cis-1,4-Dichloro-2-Butene	50	43.2	86	71-126
541-73-1	m-Dichlorobenzene	50	53.8	108	82-126
95-50-1	o-Dichlorobenzene	50	52.8	106	83-123
106-46-7	p-Dichlorobenzene	50	53.3	107	84-124
156-60-5	trans-1,2-Dichloroethylene	50	50.2	100	77-129
10061-02-6	trans-1,3-Dichloropropene	50	45.9	92	87-131
100-41-4	Ethylbenzene	50	52.4	105	82-124
97-63-2	Ethyl methacrylate	50	46.1	92	78-118
76-13-1	Freon 113	50	61.5	123	62-147
591-78-6	2-Hexanone	250	162	65*	67-130
87-68-3	Hexachlorobutadiene	50	52.0	104	77-150
110-54-3	Hexane	50	64.3	129	65-147
98-82-8	Isopropylbenzene	50	62.0	124	82-133
99-87-6	p-Isopropyltoluene	50	59.8	120	82-132
108-10-1	4-Methyl-2-pentanone	250	209	84	69-125
126-98-7	Methacrylonitrile	500	488	98	70-138
74-83-9	Methyl bromide	50	83.2	166*	60-146
74-87-3	Methyl chloride	50	60.4	121	58-163
74-88-4	Methyl iodide	50	54.4	109	66-128
80-62-6	Methyl methacrylate	50	46.6	93	73-125
74-95-3	Methylene bromide	50	49.1	98	75-128
75-09-2	Methylene chloride	50	82.6	165*	62-140
78-93-3	Methyl ethyl ketone	250	169	68	66-134
1634-04-4	Methyl Tert Butyl Ether	50	46.5	93	70-131
91-20-3	Naphthalene	50	42.1	84	59-143
76-01-7	Pentachloroethane	50	59.3	119	64-156
107-12-0	Propionitrile	500	457	91	73-133
103-65-1	n-Propylbenzene	50	55.5	111	78-129
100-42-5	Styrene	50	46.3	93	79-123
630-20-6	1,1,1,2-Tetrachloroethane	50	52.1	104	81-121
71-55-6	1,1,1-Trichloroethane	50	56.1	112	80-133
79-34-5	1,1,2,2-Tetrachloroethane	50	47.4	95	70-128
79-00-5	1,1,2-Trichloroethane	50	43.8	88	76-118
87-61-6	1,2,3-Trichlorobenzene	50	49.6	99	78-136
96-18-4	1,2,3-Trichloropropane	50	46.1	92	74-125
120-82-1	1,2,4-Trichlorobenzene	50	47.2	94	82-137

Blank Spike Summary

Job Number: F78009
Account: TETTNOAK Tetra Tech, Inc
Project: Holloman AFB; Alamogordo, NM

Sample	File ID	DF	Analyzed	By	Prep Date	Prep Batch	Analytical Batch
VG2581-BS	G0068549.D	1	11/18/10	MM	n/a	n/a	VG2581

The QC reported here applies to the following samples: **Method:** SW846 8260B

F78009-1, F78009-2, F78009-3, F78009-4

CAS No.	Compound	Spike ug/kg	BSP ug/kg	BSP %	Limits
95-63-6	1,2,4-Trimethylbenzene	50	58.1	116	77-129
108-67-8	1,3,5-Trimethylbenzene	50	56.9	114	79-129
127-18-4	Tetrachloroethylene	50	56.9	114	79-132
108-88-3	Toluene	50	49.7	99	80-123
79-01-6	Trichloroethylene	50	56.3	113	78-132
75-69-4	Trichlorofluoromethane	50	71.2	142	67-149
110-57-6	Trans-1,4-Dichloro-2-Butene	50	50.0	100	74-138
75-01-4	Vinyl chloride	50	58.1	116	60-145
108-05-4	Vinyl Acetate	250	185	74	25-164
	m,p-Xylene	100	112	112	82-128
95-47-6	o-Xylene	50	51.6	103	82-126

CAS No.	Surrogate Recoveries	BSP	Limits
1868-53-7	Dibromofluoromethane	103%	80-121%
2037-26-5	Toluene-D8	93%	71-130%
460-00-4	4-Bromofluorobenzene	98%	59-148%
17060-07-0	1,2-Dichloroethane-D4	110%	77-123%

Blank Spike Summary

Job Number: F78009
Account: TETTNOAK Tetra Tech, Inc
Project: Holloman AFB; Alamogordo, NM

Sample	File ID	DF	Analyzed	By	Prep Date	Prep Batch	Analytical Batch
VH2464-BS	H066172.D	1	11/19/10	MM	n/a	n/a	VH2464

The QC reported here applies to the following samples: **Method:** SW846 8260B

F78009-13, F78009-14, F78009-15, F78009-16, F78009-17, F78009-21, F78009-25, F78009-27

CAS No.	Compound	Spike ug/kg	BSP ug/kg	BSP %	Limits
67-64-1	Acetone	250	161	64	61-144
75-05-8	Acetonitrile	500	547	109	59-139
107-02-8	Acrolein	250	226	90	27-156
107-13-1	Acrylonitrile	250	283	113	55-144
107-05-1	Allyl chloride	50	60.9	122	41-152
71-43-2	Benzene	50	51.6	103	78-130
100-44-7	Benzyl Chloride	50	46.3	93	74-130
108-86-1	Bromobenzene	50	50.8	102	78-123
74-97-5	Bromochloromethane	50	50.9	102	72-122
75-27-4	Bromodichloromethane	50	51.0	102	73-122
75-25-2	Bromoform	50	43.9	88	70-139
104-51-8	n-Butylbenzene	50	51.7	103	80-138
135-98-8	sec-Butylbenzene	50	51.0	102	82-132
98-06-6	tert-Butylbenzene	50	51.3	103	79-130
108-90-7	Chlorobenzene	50	50.6	101	83-122
75-00-3	Chloroethane	50	60.5	121	61-153
67-66-3	Chloroform	50	52.3	105	79-129
544-10-5	1-Chlorohexane	50	51.6	103	85-137
95-49-8	o-Chlorotoluene	50	50.4	101	77-123
106-43-4	p-Chlorotoluene	50	50.8	102	78-129
110-75-8	2-Chloroethyl vinyl ether	250	216	86	52-142
75-15-0	Carbon disulfide	50	53.1	106	61-142
56-23-5	Carbon tetrachloride	50	53.0	106	79-135
75-34-3	1,1-Dichloroethane	50	60.2	120	77-132
75-35-4	1,1-Dichloroethylene	50	57.5	115	66-132
563-58-6	1,1-Dichloropropene	50	51.5	103	81-133
96-12-8	1,2-Dibromo-3-chloropropane	50	37.2	74	67-129
106-93-4	1,2-Dibromoethane	50	40.7	81	77-126
107-06-2	1,2-Dichloroethane	50	50.1	100	78-129
78-87-5	1,2-Dichloropropane	50	48.9	98	74-127
142-28-9	1,3-Dichloropropane	50	39.9	80	78-118
594-20-7	2,2-Dichloropropane	50	54.1	108	80-137
124-48-1	Dibromochloromethane	50	42.1	84	78-117
75-71-8	Dichlorodifluoromethane	50	115	230*	35-162
156-59-2	cis-1,2-Dichloroethylene	50	53.0	106	74-123
10061-01-5	cis-1,3-Dichloropropene	50	51.8	104	79-130

Blank Spike Summary

Job Number: F78009
Account: TETTNOAK Tetra Tech, Inc
Project: Holloman AFB; Alamogordo, NM

Sample	File ID	DF	Analyzed	By	Prep Date	Prep Batch	Analytical Batch
VH2464-BS	H066172.D	1	11/19/10	MM	n/a	n/a	VH2464

The QC reported here applies to the following samples: **Method:** SW846 8260B

F78009-13, F78009-14, F78009-15, F78009-16, F78009-17, F78009-21, F78009-25, F78009-27

CAS No.	Compound	Spike ug/kg	BSP ug/kg	BSP %	Limits
1476-11-5	cis-1,4-Dichloro-2-Butene	50	42.3	85	71-126
541-73-1	m-Dichlorobenzene	50	52.0	104	82-126
95-50-1	o-Dichlorobenzene	50	49.7	99	83-123
106-46-7	p-Dichlorobenzene	50	49.9	100	84-124
156-60-5	trans-1,2-Dichloroethylene	50	60.4	121	77-129
10061-02-6	trans-1,3-Dichloropropene	50	44.9	90	87-131
100-41-4	Ethylbenzene	50	50.8	102	82-124
97-63-2	Ethyl methacrylate	50	35.4	71*	78-118
76-13-1	Freon 113	50	60.7	121	62-147
591-78-6	2-Hexanone	250	171	68	67-130
87-68-3	Hexachlorobutadiene	50	60.3	121	77-150
110-54-3	Hexane	50	70.5	141	65-147
98-82-8	Isopropylbenzene	50	57.9	116	82-133
99-87-6	p-Isopropyltoluene	50	53.1	106	82-132
108-10-1	4-Methyl-2-pentanone	250	208	83	69-125
126-98-7	Methacrylonitrile	500	542	108	70-138
74-83-9	Methyl bromide	50	68.3	137	60-146
74-87-3	Methyl chloride	50	75.5	151	58-163
74-88-4	Methyl iodide	50	63.3	127	66-128
80-62-6	Methyl methacrylate	50	45.8	92	73-125
74-95-3	Methylene bromide	50	50.6	101	75-128
75-09-2	Methylene chloride	50	75.4	151*	62-140
78-93-3	Methyl ethyl ketone	250	168	67	66-134
1634-04-4	Methyl Tert Butyl Ether	50	60.0	120	70-131
91-20-3	Naphthalene	50	43.3	87	59-143
76-01-7	Pentachloroethane	50	52.9	106	64-156
107-12-0	Propionitrile	500	499	100	73-133
103-65-1	n-Propylbenzene	50	51.1	102	78-129
100-42-5	Styrene	50	49.1	98	79-123
630-20-6	1,1,1,2-Tetrachloroethane	50	49.9	100	81-121
71-55-6	1,1,1-Trichloroethane	50	52.4	105	80-133
79-34-5	1,1,2,2-Tetrachloroethane	50	46.1	92	70-128
79-00-5	1,1,2-Trichloroethane	50	39.9	80	76-118
87-61-6	1,2,3-Trichlorobenzene	50	52.9	106	78-136
96-18-4	1,2,3-Trichloropropane	50	44.5	89	74-125
120-82-1	1,2,4-Trichlorobenzene	50	53.6	107	82-137

Blank Spike Summary

Job Number: F78009
Account: TETTNOAK Tetra Tech, Inc
Project: Holloman AFB; Alamogordo, NM

Sample	File ID	DF	Analyzed	By	Prep Date	Prep Batch	Analytical Batch
VH2464-BS	H066172.D	1	11/19/10	MM	n/a	n/a	VH2464

The QC reported here applies to the following samples: **Method:** SW846 8260B

F78009-13, F78009-14, F78009-15, F78009-16, F78009-17, F78009-21, F78009-25, F78009-27

CAS No.	Compound	Spike ug/kg	BSP ug/kg	BSP %	Limits
95-63-6	1,2,4-Trimethylbenzene	50	51.2	102	77-129
108-67-8	1,3,5-Trimethylbenzene	50	51.8	104	79-129
127-18-4	Tetrachloroethylene	50	52.7	105	79-132
108-88-3	Toluene	50	47.0	94	80-123
79-01-6	Trichloroethylene	50	53.3	107	78-132
75-69-4	Trichlorofluoromethane	50	68.9	138	67-149
110-57-6	Trans-1,4-Dichloro-2-Butene	50	45.7	91	74-138
75-01-4	Vinyl chloride	50	60.9	122	60-145
108-05-4	Vinyl Acetate	250	227	91	25-164
	m,p-Xylene	100	103	103	82-128
95-47-6	o-Xylene	50	49.9	100	82-126

CAS No.	Surrogate Recoveries	BSP	Limits
1868-53-7	Dibromofluoromethane	105%	80-121%
2037-26-5	Toluene-D8	86%	71-130%
460-00-4	4-Bromofluorobenzene	100%	59-148%
17060-07-0	1,2-Dichloroethane-D4	108%	77-123%

Blank Spike Summary

Job Number: F78009
Account: TETTNOAK Tetra Tech, Inc
Project: Holloman AFB; Alamogordo, NM

Sample	File ID	DF	Analyzed	By	Prep Date	Prep Batch	Analytical Batch
VG2582-BS	G0068591.D	1	11/19/10	MM	n/a	n/a	VG2582

The QC reported here applies to the following samples: **Method:** SW846 8260B

F78009-33, F78009-34, F78009-35

CAS No.	Compound	Spike ug/kg	BSP ug/kg	BSP %	Limits
67-64-1	Acetone	250	104	42*	61-144
75-05-8	Acetonitrile	500	386	77	59-139
107-02-8	Acrolein	250	234	94	27-156
107-13-1	Acrylonitrile	250	173	69	55-144
107-05-1	Allyl chloride	50	56.1	112	41-152
71-43-2	Benzene	50	51.1	102	78-130
100-44-7	Benzyl Chloride	50	42.3	85	74-130
108-86-1	Bromobenzene	50	52.0	104	78-123
74-97-5	Bromochloromethane	50	47.0	94	72-122
75-27-4	Bromodichloromethane	50	52.8	106	73-122
75-25-2	Bromoform	50	43.7	87	70-139
104-51-8	n-Butylbenzene	50	47.5	95	80-138
135-98-8	sec-Butylbenzene	50	55.6	111	82-132
98-06-6	tert-Butylbenzene	50	56.1	112	79-130
108-90-7	Chlorobenzene	50	53.3	107	83-122
75-00-3	Chloroethane	50	67.1	134	61-153
67-66-3	Chloroform	50	55.3	111	79-129
544-10-5	1-Chlorohexane	50	40.7	81*	85-137
95-49-8	o-Chlorotoluene	50	55.4	111	77-123
106-43-4	p-Chlorotoluene	50	54.6	109	78-129
110-75-8	2-Chloroethyl vinyl ether	250	220	88	52-142
75-15-0	Carbon disulfide	50	45.3	91	61-142
56-23-5	Carbon tetrachloride	50	55.6	111	79-135
75-34-3	1,1-Dichloroethane	50	49.6	99	77-132
75-35-4	1,1-Dichloroethylene	50	46.1	92	66-132
563-58-6	1,1-Dichloropropene	50	50.9	102	81-133
96-12-8	1,2-Dibromo-3-chloropropane	50	36.0	72	67-129
106-93-4	1,2-Dibromoethane	50	42.1	84	77-126
107-06-2	1,2-Dichloroethane	50	52.2	104	78-129
78-87-5	1,2-Dichloropropane	50	49.1	98	74-127
142-28-9	1,3-Dichloropropane	50	41.6	83	78-118
594-20-7	2,2-Dichloropropane	50	51.6	103	80-137
124-48-1	Dibromochloromethane	50	47.6	95	78-117
75-71-8	Dichlorodifluoromethane	50	62.8	126	35-162
156-59-2	cis-1,2-Dichloroethylene	50	53.7	107	74-123
10061-01-5	cis-1,3-Dichloropropene	50	51.9	104	79-130

Blank Spike Summary

Job Number: F78009
Account: TETTNOAK Tetra Tech, Inc
Project: Holloman AFB; Alamogordo, NM

Sample	File ID	DF	Analyzed	By	Prep Date	Prep Batch	Analytical Batch
VG2582-BS	G0068591.D	1	11/19/10	MM	n/a	n/a	VG2582

The QC reported here applies to the following samples: **Method:** SW846 8260B

F78009-33, F78009-34, F78009-35

CAS No.	Compound	Spike ug/kg	BSP ug/kg	BSP %	Limits
1476-11-5	cis-1,4-Dichloro-2-Butene	50	41.2	82	71-126
541-73-1	m-Dichlorobenzene	50	54.1	108	82-126
95-50-1	o-Dichlorobenzene	50	50.6	101	83-123
106-46-7	p-Dichlorobenzene	50	55.1	110	84-124
156-60-5	trans-1,2-Dichloroethylene	50	48.6	97	77-129
10061-02-6	trans-1,3-Dichloropropene	50	43.5	87	87-131
100-41-4	Ethylbenzene	50	53.1	106	82-124
97-63-2	Ethyl methacrylate	50	40.6	81	78-118
76-13-1	Freon 113	50	52.0	104	62-147
591-78-6	2-Hexanone	250	136	54*	67-130
87-68-3	Hexachlorobutadiene	50	46.9	94	77-150
110-54-3	Hexane	50	48.7	97	65-147
98-82-8	Isopropylbenzene	50	60.4	121	82-133
99-87-6	p-Isopropyltoluene	50	57.2	114	82-132
108-10-1	4-Methyl-2-pentanone	250	176	70	69-125
126-98-7	Methacrylonitrile	500	437	87	70-138
74-83-9	Methyl bromide	50	81.1	162*	60-146
74-87-3	Methyl chloride	50	56.1	112	58-163
74-88-4	Methyl iodide	50	52.9	106	66-128
80-62-6	Methyl methacrylate	50	43.0	86	73-125
74-95-3	Methylene bromide	50	47.4	95	75-128
75-09-2	Methylene chloride	50	62.1	124	62-140
78-93-3	Methyl ethyl ketone	250	135	54*	66-134
1634-04-4	Methyl Tert Butyl Ether	50	42.9	86	70-131
91-20-3	Naphthalene	50	34.2	68	59-143
76-01-7	Pentachloroethane	50	62.5	125	64-156
107-12-0	Propionitrile	500	351	70*	73-133
103-65-1	n-Propylbenzene	50	54.0	108	78-129
100-42-5	Styrene	50	46.0	92	79-123
630-20-6	1,1,1,2-Tetrachloroethane	50	52.1	104	81-121
71-55-6	1,1,1-Trichloroethane	50	53.9	108	80-133
79-34-5	1,1,2,2-Tetrachloroethane	50	40.7	81	70-128
79-00-5	1,1,2-Trichloroethane	50	43.3	87	76-118
87-61-6	1,2,3-Trichlorobenzene	50	40.8	82	78-136
96-18-4	1,2,3-Trichloropropane	50	39.6	79	74-125
120-82-1	1,2,4-Trichlorobenzene	50	42.4	85	82-137

Blank Spike Summary

Job Number: F78009
Account: TETTNOAK Tetra Tech, Inc
Project: Holloman AFB; Alamogordo, NM

Sample	File ID	DF	Analyzed	By	Prep Date	Prep Batch	Analytical Batch
VG2582-BS	G0068591.D	1	11/19/10	MM	n/a	n/a	VG2582

The QC reported here applies to the following samples: **Method:** SW846 8260B

F78009-33, F78009-34, F78009-35

CAS No.	Compound	Spike ug/kg	BSP ug/kg	BSP %	Limits
95-63-6	1,2,4-Trimethylbenzene	50	56.6	113	77-129
108-67-8	1,3,5-Trimethylbenzene	50	56.9	114	79-129
127-18-4	Tetrachloroethylene	50	51.1	102	79-132
108-88-3	Toluene	50	47.6	95	80-123
79-01-6	Trichloroethylene	50	56.9	114	78-132
75-69-4	Trichlorofluoromethane	50	60.3	121	67-149
110-57-6	Trans-1,4-Dichloro-2-Butene	50	43.8	88	74-138
75-01-4	Vinyl chloride	50	51.9	104	60-145
108-05-4	Vinyl Acetate	250	177	71	25-164
	m,p-Xylene	100	111	111	82-128
95-47-6	o-Xylene	50	50.8	102	82-126

CAS No.	Surrogate Recoveries	BSP	Limits
1868-53-7	Dibromofluoromethane	104%	80-121%
2037-26-5	Toluene-D8	94%	71-130%
460-00-4	4-Bromofluorobenzene	99%	59-148%
17060-07-0	1,2-Dichloroethane-D4	107%	77-123%

Blank Spike Summary

Job Number: F78009
Account: TETTNOAK Tetra Tech, Inc
Project: Holloman AFB; Alamogordo, NM

Sample	File ID	DF	Analyzed	By	Prep Date	Prep Batch	Analytical Batch
VH2465-BS	H066216.D	1	11/20/10	MM	n/a	n/a	VH2465

The QC reported here applies to the following samples: **Method:** SW846 8260B

F78009-18, F78009-19, F78009-20, F78009-22, F78009-23, F78009-24, F78009-26, F78009-28, F78009-29, F78009-30, F78009-31, F78009-32

CAS No.	Compound	Spike ug/kg	BSP ug/kg	BSP %	Limits
67-64-1	Acetone	250	168	67	61-144
75-05-8	Acetonitrile	500	459	92	59-139
107-02-8	Acrolein	250	254	102	27-156
107-13-1	Acrylonitrile	250	262	105	55-144
107-05-1	Allyl chloride	50	61.1	122	41-152
71-43-2	Benzene	50	54.4	109	78-130
100-44-7	Benzyl Chloride	50	46.9	94	74-130
108-86-1	Bromobenzene	50	49.6	99	78-123
74-97-5	Bromochloromethane	50	50.4	101	72-122
75-27-4	Bromodichloromethane	50	54.5	109	73-122
75-25-2	Bromoform	50	44.3	89	70-139
104-51-8	n-Butylbenzene	50	55.2	110	80-138
135-98-8	sec-Butylbenzene	50	53.9	108	82-132
98-06-6	tert-Butylbenzene	50	54.2	108	79-130
108-90-7	Chlorobenzene	50	54.2	108	83-122
75-00-3	Chloroethane	50	63.2	126	61-153
67-66-3	Chloroform	50	54.5	109	79-129
544-10-5	1-Chlorohexane	50	53.1	106	85-137
95-49-8	o-Chlorotoluene	50	51.4	103	77-123
106-43-4	p-Chlorotoluene	50	52.1	104	78-129
110-75-8	2-Chloroethyl vinyl ether	250	176	70	52-142
75-15-0	Carbon disulfide	50	55.1	110	61-142
56-23-5	Carbon tetrachloride	50	55.2	110	79-135
75-34-3	1,1-Dichloroethane	50	51.8	104	77-132
75-35-4	1,1-Dichloroethylene	50	60.0	120	66-132
563-58-6	1,1-Dichloropropene	50	54.1	108	81-133
96-12-8	1,2-Dibromo-3-chloropropane	50	43.1	86	67-129
106-93-4	1,2-Dibromoethane	50	41.4	83	77-126
107-06-2	1,2-Dichloroethane	50	54.0	108	78-129
78-87-5	1,2-Dichloropropane	50	51.0	102	74-127
142-28-9	1,3-Dichloropropane	50	42.5	85	78-118
594-20-7	2,2-Dichloropropane	50	55.5	111	80-137
124-48-1	Dibromochloromethane	50	43.6	87	78-117
75-71-8	Dichlorodifluoromethane	50	108	216*	35-162
156-59-2	cis-1,2-Dichloroethylene	50	55.5	111	74-123
10061-01-5	cis-1,3-Dichloropropene	50	55.5	111	79-130

Blank Spike Summary

Job Number: F78009
Account: TETTNOAK Tetra Tech, Inc
Project: Holloman AFB; Alamogordo, NM

Sample	File ID	DF	Analyzed	By	Prep Date	Prep Batch	Analytical Batch
VH2465-BS	H066216.D	1	11/20/10	MM	n/a	n/a	VH2465

The QC reported here applies to the following samples: **Method:** SW846 8260B

F78009-18, F78009-19, F78009-20, F78009-22, F78009-23, F78009-24, F78009-26, F78009-28, F78009-29, F78009-30, F78009-31, F78009-32

CAS No.	Compound	Spike ug/kg	BSP ug/kg	BSP %	Limits
1476-11-5	cis-1,4-Dichloro-2-Butene	50	42.0	84	71-126
541-73-1	m-Dichlorobenzene	50	54.9	110	82-126
95-50-1	o-Dichlorobenzene	50	51.3	103	83-123
106-46-7	p-Dichlorobenzene	50	54.1	108	84-124
156-60-5	trans-1,2-Dichloroethylene	50	61.3	123	77-129
10061-02-6	trans-1,3-Dichloropropene	50	47.7	95	87-131
100-41-4	Ethylbenzene	50	52.3	105	82-124
97-63-2	Ethyl methacrylate	50	37.6	75*	78-118
76-13-1	Freon 113	50	64.0	128	62-147
591-78-6	2-Hexanone	250	194	78	67-130
87-68-3	Hexachlorobutadiene	50	62.8	126	77-150
110-54-3	Hexane	50	70.2	140	65-147
98-82-8	Isopropylbenzene	50	60.5	121	82-133
99-87-6	p-Isopropyltoluene	50	56.6	113	82-132
108-10-1	4-Methyl-2-pentanone	250	237	95	69-125
126-98-7	Methacrylonitrile	500	584	117	70-138
74-83-9	Methyl bromide	50	64.0	128	60-146
74-87-3	Methyl chloride	50	76.9	154	58-163
74-88-4	Methyl iodide	50	62.1	124	66-128
80-62-6	Methyl methacrylate	50	54.0	108	73-125
74-95-3	Methylene bromide	50	54.1	108	75-128
75-09-2	Methylene chloride	50	61.2	122	62-140
78-93-3	Methyl ethyl ketone	250	185	74	66-134
1634-04-4	Methyl Tert Butyl Ether	50	58.5	117	70-131
91-20-3	Naphthalene	50	48.5	97	59-143
76-01-7	Pentachloroethane	50	53.6	107	64-156
107-12-0	Propionitrile	500	530	106	73-133
103-65-1	n-Propylbenzene	50	53.2	106	78-129
100-42-5	Styrene	50	52.0	104	79-123
630-20-6	1,1,1,2-Tetrachloroethane	50	51.5	103	81-121
71-55-6	1,1,1-Trichloroethane	50	54.2	108	80-133
79-34-5	1,1,2,2-Tetrachloroethane	50	48.8	98	70-128
79-00-5	1,1,2-Trichloroethane	50	42.0	84	76-118
87-61-6	1,2,3-Trichlorobenzene	50	53.7	107	78-136
96-18-4	1,2,3-Trichloropropane	50	48.1	96	74-125
120-82-1	1,2,4-Trichlorobenzene	50	56.7	113	82-137

Blank Spike Summary

Job Number: F78009
Account: TETTNOAK Tetra Tech, Inc
Project: Holloman AFB; Alamogordo, NM

Sample	File ID	DF	Analyzed	By	Prep Date	Prep Batch	Analytical Batch
VH2465-BS	H066216.D	1	11/20/10	MM	n/a	n/a	VH2465

The QC reported here applies to the following samples: **Method:** SW846 8260B

F78009-18, F78009-19, F78009-20, F78009-22, F78009-23, F78009-24, F78009-26, F78009-28, F78009-29, F78009-30, F78009-31, F78009-32

CAS No.	Compound	Spike ug/kg	BSP ug/kg	BSP %	Limits
95-63-6	1,2,4-Trimethylbenzene	50	53.8	108	77-129
108-67-8	1,3,5-Trimethylbenzene	50	52.6	105	79-129
127-18-4	Tetrachloroethylene	50	54.8	110	79-132
108-88-3	Toluene	50	49.0	98	80-123
79-01-6	Trichloroethylene	50	55.0	110	78-132
75-69-4	Trichlorofluoromethane	50	67.6	135	67-149
110-57-6	Trans-1,4-Dichloro-2-Butene	50	46.3	93	74-138
75-01-4	Vinyl chloride	50	58.3	117	60-145
108-05-4	Vinyl Acetate	250	241	96	25-164
	m,p-Xylene	100	108	108	82-128
95-47-6	o-Xylene	50	52.7	105	82-126

CAS No.	Surrogate Recoveries	BSP	Limits
1868-53-7	Dibromofluoromethane	101%	80-121%
2037-26-5	Toluene-D8	89%	71-130%
460-00-4	4-Bromofluorobenzene	93%	59-148%
17060-07-0	1,2-Dichloroethane-D4	110%	77-123%

Blank Spike Summary

Job Number: F78009
Account: TETTNOAK Tetra Tech, Inc
Project: Holloman AFB; Alamogordo, NM

Sample	File ID	DF	Analyzed	By	Prep Date	Prep Batch	Analytical Batch
VF1348-BS	F046024.D	1	11/23/10	SH	n/a	n/a	VF1348

The QC reported here applies to the following samples: **Method:** SW846 8260B

F78009-38, F78009-39

CAS No.	Compound	Spike ug/l	BSP ug/l	BSP %	Limits
67-64-1	Acetone	125	66.0	53*	59-134
75-05-8	Acetonitrile	250	221	88	57-123
107-02-8	Acrolein	125	80.0	64	33-157
107-13-1	Acrylonitrile	125	110	88	62-124
107-05-1	Allyl chloride	25	23.0	92	48-136
71-43-2	Benzene	25	25.1	100	83-124
100-44-7	Benzyl Chloride	25	23.3	93	61-118
108-86-1	Bromobenzene	25	23.0	92	83-115
74-97-5	Bromochloromethane	25	24.1	96	78-112
75-27-4	Bromodichloromethane	25	23.3	93	76-116
75-25-2	Bromoform	25	24.6	98	68-128
104-51-8	n-Butylbenzene	25	22.8	91	84-124
135-98-8	sec-Butylbenzene	25	24.4	98	86-127
98-06-6	tert-Butylbenzene	25	24.9	100	83-126
108-90-7	Chlorobenzene	25	25.0	100	87-115
75-00-3	Chloroethane	25	26.3	105	54-166
67-66-3	Chloroform	25	24.9	100	85-123
544-10-5	1-Chlorohexane	25	25.2	101	87-128
95-49-8	o-Chlorotoluene	25	24.4	98	84-121
106-43-4	p-Chlorotoluene	25	24.5	98	84-120
110-75-8	2-Chloroethyl vinyl ether	125	111	89	63-125
75-15-0	Carbon disulfide	25	23.5	94	67-147
56-23-5	Carbon tetrachloride	25	26.5	106	74-139
75-34-3	1,1-Dichloroethane	25	23.9	96	82-127
75-35-4	1,1-Dichloroethylene	25	25.7	103	75-133
563-58-6	1,1-Dichloropropene	25	25.1	100	87-127
96-12-8	1,2-Dibromo-3-chloropropane	25	22.6	90	61-118
106-93-4	1,2-Dibromoethane	25	23.8	95	80-115
107-06-2	1,2-Dichloroethane	25	23.8	95	76-122
78-87-5	1,2-Dichloropropane	25	24.3	97	81-120
142-28-9	1,3-Dichloropropane	25	23.3	93	81-113
594-20-7	2,2-Dichloropropane	25	25.0	100	77-138
124-48-1	Dibromochloromethane	25	24.8	99	74-116
75-71-8	Dichlorodifluoromethane	25	14.7	59	34-158
156-59-2	cis-1,2-Dichloroethylene	25	25.2	101	81-114
10061-01-5	cis-1,3-Dichloropropene	25	24.0	96	83-119

Blank Spike Summary

Job Number: F78009
Account: TETTNOAK Tetra Tech, Inc
Project: Holloman AFB; Alamogordo, NM

Sample	File ID	DF	Analyzed	By	Prep Date	Prep Batch	Analytical Batch
VF1348-BS	F046024.D	1	11/23/10	SH	n/a	n/a	VF1348

The QC reported here applies to the following samples: **Method:** SW846 8260B

F78009-38, F78009-39

CAS No.	Compound	Spike ug/l	BSP ug/l	BSP %	Limits
1476-11-5	cis-1,4-Dichloro-2-Butene	25	38.1	152*	41-130
541-73-1	m-Dichlorobenzene	25	24.1	96	86-115
95-50-1	o-Dichlorobenzene	25	24.3	97	85-115
106-46-7	p-Dichlorobenzene	25	24.0	96	87-113
156-60-5	trans-1,2-Dichloroethylene	25	23.8	95	82-126
10061-02-6	trans-1,3-Dichloropropene	25	26.1	104	87-123
100-41-4	Ethylbenzene	25	25.1	100	87-118
97-63-2	Ethyl methacrylate	25	21.4	86	68-110
76-13-1	Freon 113	25	26.4	106	74-139
591-78-6	2-Hexanone	125	94.3	75	58-125
87-68-3	Hexachlorobutadiene	25	29.9	120	71-133
110-54-3	Hexane	25	28.0	112	71-134
98-82-8	Isopropylbenzene	25	29.4	118	87-131
99-87-6	p-Isopropyltoluene	25	24.9	100	83-125
108-10-1	4-Methyl-2-pentanone	125	119	95	62-125
126-98-7	Methacrylonitrile	250	228	91	62-133
74-83-9	Methyl bromide	25	27.3	109	55-151
74-87-3	Methyl chloride	25	22.5	90	55-173
74-88-4	Methyl iodide	25	25.8	103	72-125
80-62-6	Methyl methacrylate	25	20.9	84	63-115
74-95-3	Methylene bromide	25	23.9	96	81-116
75-09-2	Methylene chloride	25	27.8	111	69-125
78-93-3	Methyl ethyl ketone	125	87.1	70	61-127
1634-04-4	Methyl Tert Butyl Ether	25	23.5	94	75-116
91-20-3	Naphthalene	25	22.9	92	59-125
76-01-7	Pentachloroethane	25	24.6	98	82-111
107-12-0	Propionitrile	250	208	83	69-119
103-65-1	n-Propylbenzene	25	24.8	99	86-125
100-42-5	Styrene	25	25.3	101	78-118
630-20-6	1,1,1,2-Tetrachloroethane	25	24.9	100	81-119
71-55-6	1,1,1-Trichloroethane	25	25.6	102	79-133
79-34-5	1,1,2,2-Tetrachloroethane	25	22.9	92	71-120
79-00-5	1,1,2-Trichloroethane	25	23.6	94	80-114
87-61-6	1,2,3-Trichlorobenzene	25	25.9	104	64-126
96-18-4	1,2,3-Trichloropropane	25	21.4	86	77-115
120-82-1	1,2,4-Trichlorobenzene	25	26.0	104	68-123

Blank Spike Summary

Job Number: F78009
Account: TETTNOAK Tetra Tech, Inc
Project: Holloman AFB; Alamogordo, NM

Sample	File ID	DF	Analyzed	By	Prep Date	Prep Batch	Analytical Batch
VF1348-BS	F046024.D	1	11/23/10	SH	n/a	n/a	VF1348

The QC reported here applies to the following samples: **Method:** SW846 8260B

F78009-38, F78009-39

CAS No.	Compound	Spike ug/l	BSP ug/l	BSP %	Limits
95-63-6	1,2,4-Trimethylbenzene	25	25.5	102	82-120
108-67-8	1,3,5-Trimethylbenzene	25	24.8	99	83-123
127-18-4	Tetrachloroethylene	25	25.4	102	80-131
108-88-3	Toluene	25	25.1	100	86-116
79-01-6	Trichloroethylene	25	24.8	99	85-124
75-69-4	Trichlorofluoromethane	25	31.5	126	66-156
110-57-6	Trans-1,4-Dichloro-2-Butene	25	36.2	145*	51-137
75-01-4	Vinyl chloride	25	24.9	100	57-153
108-05-4	Vinyl Acetate	125	115	92	38-159
	m,p-Xylene	50	51.2	102	86-121
95-47-6	o-Xylene	25	25.1	100	83-121

CAS No.	Surrogate Recoveries	BSP	Limits
1868-53-7	Dibromofluoromethane	99%	87-116%
17060-07-0	1,2-Dichloroethane-D4	103%	76-127%
2037-26-5	Toluene-D8	99%	86-112%
460-00-4	4-Bromofluorobenzene	92%	84-120%

Blank Spike Summary

Job Number: F78009
Account: TETTNOAK Tetra Tech, Inc
Project: Holloman AFB; Alamogordo, NM

Sample	File ID	DF	Analyzed	By	Prep Date	Prep Batch	Analytical Batch
VF1350-BS	F046051.D	1	11/24/10	SH	n/a	n/a	VF1350

The QC reported here applies to the following samples: **Method:** SW846 8260B

F78009-37

CAS No.	Compound	Spike ug/l	BSP ug/l	BSP %	Limits
67-64-1	Acetone	125	73.5	59	59-134
75-05-8	Acetonitrile	250	234	94	57-123
107-02-8	Acrolein	125	78.7	63	33-157
107-13-1	Acrylonitrile	125	113	90	62-124
107-05-1	Allyl chloride	25	24.5	98	48-136
71-43-2	Benzene	25	24.8	99	83-124
100-44-7	Benzyl Chloride	25	27.8	111	61-118
108-86-1	Bromobenzene	25	24.7	99	83-115
74-97-5	Bromochloromethane	25	24.4	98	78-112
75-27-4	Bromodichloromethane	25	24.2	97	76-116
75-25-2	Bromoform	25	24.2	97	68-128
104-51-8	n-Butylbenzene	25	24.9	100	84-124
135-98-8	sec-Butylbenzene	25	28.2	113	86-127
98-06-6	tert-Butylbenzene	25	27.4	110	83-126
108-90-7	Chlorobenzene	25	24.9	100	87-115
75-00-3	Chloroethane	25	24.9	100	54-166
67-66-3	Chloroform	25	25.3	101	85-123
544-10-5	1-Chlorohexane	25	28.5	114	87-128
95-49-8	o-Chlorotoluene	25	27.0	108	84-121
106-43-4	p-Chlorotoluene	25	27.9	112	84-120
110-75-8	2-Chloroethyl vinyl ether	125	104	83	63-125
75-15-0	Carbon disulfide	25	18.9	76	67-147
56-23-5	Carbon tetrachloride	25	25.2	101	74-139
75-34-3	1,1-Dichloroethane	25	24.7	99	82-127
75-35-4	1,1-Dichloroethylene	25	21.3	85	75-133
563-58-6	1,1-Dichloropropene	25	26.0	104	87-127
96-12-8	1,2-Dibromo-3-chloropropane	25	23.6	94	61-118
106-93-4	1,2-Dibromoethane	25	25.2	101	80-115
107-06-2	1,2-Dichloroethane	25	24.6	98	76-122
78-87-5	1,2-Dichloropropane	25	25.3	101	81-120
142-28-9	1,3-Dichloropropane	25	24.9	100	81-113
594-20-7	2,2-Dichloropropane	25	26.3	105	77-138
124-48-1	Dibromochloromethane	25	24.9	100	74-116
75-71-8	Dichlorodifluoromethane	25	33.3	133	34-158
156-59-2	cis-1,2-Dichloroethylene	25	26.0	104	81-114
10061-01-5	cis-1,3-Dichloropropene	25	25.7	103	83-119

Blank Spike Summary

Job Number: F78009
Account: TETTNOAK Tetra Tech, Inc
Project: Holloman AFB; Alamogordo, NM

Sample	File ID	DF	Analyzed	By	Prep Date	Prep Batch	Analytical Batch
VF1350-BS	F046051.D	1	11/24/10	SH	n/a	n/a	VF1350

The QC reported here applies to the following samples: **Method:** SW846 8260B

F78009-37

CAS No.	Compound	Spike ug/l	BSP ug/l	BSP %	Limits
1476-11-5	cis-1,4-Dichloro-2-Butene	25	21.6	86	41-130
541-73-1	m-Dichlorobenzene	25	25.3	101	86-115
95-50-1	o-Dichlorobenzene	25	24.9	100	85-115
106-46-7	p-Dichlorobenzene	25	24.9	100	87-113
156-60-5	trans-1,2-Dichloroethylene	25	24.3	97	82-126
10061-02-6	trans-1,3-Dichloropropene	25	28.3	113	87-123
100-41-4	Ethylbenzene	25	26.6	106	87-118
97-63-2	Ethyl methacrylate	25	21.1	84	68-110
76-13-1	Freon 113	25	22.4	90	74-139
591-78-6	2-Hexanone	125	104	83	58-125
87-68-3	Hexachlorobutadiene	25	29.2	117	71-133
110-54-3	Hexane	25	25.3	101	71-134
98-82-8	Isopropylbenzene	25	29.4	118	87-131
99-87-6	p-Isopropyltoluene	25	28.6	114	83-125
108-10-1	4-Methyl-2-pentanone	125	130	104	62-125
126-98-7	Methacrylonitrile	250	244	98	62-133
74-83-9	Methyl bromide	25	23.7	95	55-151
74-87-3	Methyl chloride	25	32.3	129	55-173
74-88-4	Methyl iodide	25	22.3	89	72-125
80-62-6	Methyl methacrylate	25	20.8	83	63-115
74-95-3	Methylene bromide	25	24.5	98	81-116
75-09-2	Methylene chloride	25	26.3	105	69-125
78-93-3	Methyl ethyl ketone	125	96.2	77	61-127
1634-04-4	Methyl Tert Butyl Ether	25	24.4	98	75-116
91-20-3	Naphthalene	25	23.7	95	59-125
76-01-7	Pentachloroethane	25	24.7	99	82-111
107-12-0	Propionitrile	250	237	95	69-119
103-65-1	n-Propylbenzene	25	27.2	109	86-125
100-42-5	Styrene	25	23.9	96	78-118
630-20-6	1,1,1,2-Tetrachloroethane	25	25.2	101	81-119
71-55-6	1,1,1-Trichloroethane	25	25.4	102	79-133
79-34-5	1,1,2,2-Tetrachloroethane	25	25.7	103	71-120
79-00-5	1,1,2-Trichloroethane	25	24.7	99	80-114
87-61-6	1,2,3-Trichlorobenzene	25	25.7	103	64-126
96-18-4	1,2,3-Trichloropropane	25	22.8	91	77-115
120-82-1	1,2,4-Trichlorobenzene	25	25.9	104	68-123

Blank Spike Summary

Job Number: F78009
Account: TETTNOAK Tetra Tech, Inc
Project: Holloman AFB; Alamogordo, NM

Sample	File ID	DF	Analyzed	By	Prep Date	Prep Batch	Analytical Batch
VF1350-BS	F046051.D	1	11/24/10	SH	n/a	n/a	VF1350

The QC reported here applies to the following samples: **Method:** SW846 8260B

F78009-37

CAS No.	Compound	Spike ug/l	BSP ug/l	BSP %	Limits
95-63-6	1,2,4-Trimethylbenzene	25	26.5	106	82-120
108-67-8	1,3,5-Trimethylbenzene	25	25.1	100	83-123
127-18-4	Tetrachloroethylene	25	25.7	103	80-131
108-88-3	Toluene	25	25.7	103	86-116
79-01-6	Trichloroethylene	25	25.6	102	85-124
75-69-4	Trichlorofluoromethane	25	27.3	109	66-156
110-57-6	Trans-1,4-Dichloro-2-Butene	25	22.2	89	51-137
75-01-4	Vinyl chloride	25	24.5	98	57-153
108-05-4	Vinyl Acetate	125	115	92	38-159
	m,p-Xylene	50	55.7	111	86-121
95-47-6	o-Xylene	25	24.7	99	83-121

CAS No.	Surrogate Recoveries	BSP	Limits
1868-53-7	Dibromofluoromethane	100%	87-116%
17060-07-0	1,2-Dichloroethane-D4	103%	76-127%
2037-26-5	Toluene-D8	103%	86-112%
460-00-4	4-Bromofluorobenzene	104%	84-120%

Blank Spike Summary

Job Number: F78009
Account: TETTNOAK Tetra Tech, Inc
Project: Holloman AFB; Alamogordo, NM

Sample	File ID	DF	Analyzed	By	Prep Date	Prep Batch	Analytical Batch
VF1353-BS	F046111.D	1	11/30/10	LD	n/a	n/a	VF1353

The QC reported here applies to the following samples: **Method:** SW846 8260B

F78009-36

CAS No.	Compound	Spike ug/l	BSP ug/l	BSP %	Limits
67-64-1	Acetone	125	75.1	60	59-134
75-05-8	Acetonitrile	250	224	90	57-123
107-02-8	Acrolein	125	115	92	33-157
107-13-1	Acrylonitrile	125	122	98	62-124
107-05-1	Allyl chloride	25	23.9	96	48-136
71-43-2	Benzene	25	24.6	98	83-124
100-44-7	Benzyl Chloride	25	26.7	107	61-118
108-86-1	Bromobenzene	25	25.7	103	83-115
74-97-5	Bromochloromethane	25	25.5	102	78-112
75-27-4	Bromodichloromethane	25	25.3	101	76-116
75-25-2	Bromoform	25	24.9	100	68-128
104-51-8	n-Butylbenzene	25	23.0	92	84-124
135-98-8	sec-Butylbenzene	25	28.8	115	86-127
98-06-6	tert-Butylbenzene	25	28.3	113	83-126
108-90-7	Chlorobenzene	25	26.0	104	87-115
75-00-3	Chloroethane	25	26.0	104	54-166
67-66-3	Chloroform	25	26.0	104	85-123
544-10-5	1-Chlorohexane	25	28.6	114	87-128
95-49-8	o-Chlorotoluene	25	27.2	109	84-121
106-43-4	p-Chlorotoluene	25	27.5	110	84-120
110-75-8	2-Chloroethyl vinyl ether	125	115	92	63-125
75-15-0	Carbon disulfide	25	17.9	72	67-147
56-23-5	Carbon tetrachloride	25	26.3	105	74-139
75-34-3	1,1-Dichloroethane	25	24.2	97	82-127
75-35-4	1,1-Dichloroethylene	25	21.6	86	75-133
563-58-6	1,1-Dichloropropene	25	27.1	108	87-127
96-12-8	1,2-Dibromo-3-chloropropane	25	24.3	97	61-118
106-93-4	1,2-Dibromoethane	25	26.2	105	80-115
107-06-2	1,2-Dichloroethane	25	25.0	100	76-122
78-87-5	1,2-Dichloropropane	25	25.6	102	81-120
142-28-9	1,3-Dichloropropane	25	25.1	100	81-113
594-20-7	2,2-Dichloropropane	25	26.2	105	77-138
124-48-1	Dibromochloromethane	25	25.8	103	74-116
75-71-8	Dichlorodifluoromethane	25	26.7	107	34-158
156-59-2	cis-1,2-Dichloroethylene	25	26.4	106	81-114
10061-01-5	cis-1,3-Dichloropropene	25	26.6	106	83-119

Blank Spike Summary

Job Number: F78009
Account: TETTNOAK Tetra Tech, Inc
Project: Holloman AFB; Alamogordo, NM

Sample	File ID	DF	Analyzed	By	Prep Date	Prep Batch	Analytical Batch
VF1353-BS	F046111.D	1	11/30/10	LD	n/a	n/a	VF1353

The QC reported here applies to the following samples: **Method:** SW846 8260B

F78009-36

CAS No.	Compound	Spike ug/l	BSP ug/l	BSP %	Limits
1476-11-5	cis-1,4-Dichloro-2-Butene	25	17.5	70	41-130
541-73-1	m-Dichlorobenzene	25	26.4	106	86-115
95-50-1	o-Dichlorobenzene	25	25.4	102	85-115
106-46-7	p-Dichlorobenzene	25	25.1	100	87-113
156-60-5	trans-1,2-Dichloroethylene	25	23.9	96	82-126
10061-02-6	trans-1,3-Dichloropropene	25	27.7	111	87-123
100-41-4	Ethylbenzene	25	26.8	107	87-118
97-63-2	Ethyl methacrylate	25	20.3	81	68-110
76-13-1	Freon 113	25	24.8	99	74-139
591-78-6	2-Hexanone	125	103	82	58-125
87-68-3	Hexachlorobutadiene	25	31.3	125	71-133
110-54-3	Hexane	25	25.3	101	71-134
98-82-8	Isopropylbenzene	25	29.7	119	87-131
99-87-6	p-Isopropyltoluene	25	29.4	118	83-125
108-10-1	4-Methyl-2-pentanone	125	127	102	62-125
126-98-7	Methacrylonitrile	250	239	96	62-133
74-83-9	Methyl bromide	25	24.6	98	55-151
74-87-3	Methyl chloride	25	28.1	112	55-173
74-88-4	Methyl iodide	25	22.2	89	72-125
80-62-6	Methyl methacrylate	25	19.1	76	63-115
74-95-3	Methylene bromide	25	25.6	102	81-116
75-09-2	Methylene chloride	25	22.1	88	69-125
78-93-3	Methyl ethyl ketone	125	94.9	76	61-127
1634-04-4	Methyl Tert Butyl Ether	25	24.3	97	75-116
91-20-3	Naphthalene	25	24.8	99	59-125
76-01-7	Pentachloroethane	25	23.8	95	82-111
107-12-0	Propionitrile	250	233	93	69-119
103-65-1	n-Propylbenzene	25	27.1	108	86-125
100-42-5	Styrene	25	24.4	98	78-118
630-20-6	1,1,1,2-Tetrachloroethane	25	26.0	104	81-119
71-55-6	1,1,1-Trichloroethane	25	26.4	106	79-133
79-34-5	1,1,2,2-Tetrachloroethane	25	25.7	103	71-120
79-00-5	1,1,2-Trichloroethane	25	24.3	97	80-114
87-61-6	1,2,3-Trichlorobenzene	25	27.3	109	64-126
96-18-4	1,2,3-Trichloropropane	25	23.6	94	77-115
120-82-1	1,2,4-Trichlorobenzene	25	27.8	111	68-123

Blank Spike Summary

Job Number: F78009
Account: TETTNOAK Tetra Tech, Inc
Project: Holloman AFB; Alamogordo, NM

Sample	File ID	DF	Analyzed	By	Prep Date	Prep Batch	Analytical Batch
VF1353-BS	F046111.D	1	11/30/10	LD	n/a	n/a	VF1353

The QC reported here applies to the following samples: **Method:** SW846 8260B

F78009-36

CAS No.	Compound	Spike ug/l	BSP ug/l	BSP %	Limits
95-63-6	1,2,4-Trimethylbenzene	25	26.1	104	82-120
108-67-8	1,3,5-Trimethylbenzene	25	25.4	102	83-123
127-18-4	Tetrachloroethylene	25	27.1	108	80-131
108-88-3	Toluene	25	25.6	102	86-116
79-01-6	Trichloroethylene	25	26.4	106	85-124
75-69-4	Trichlorofluoromethane	25	29.2	117	66-156
110-57-6	Trans-1,4-Dichloro-2-Butene	25	19.5	78	51-137
75-01-4	Vinyl chloride	25	24.5	98	57-153
108-05-4	Vinyl Acetate	125	124	99	38-159
	m,p-Xylene	50	56.0	112	86-121
95-47-6	o-Xylene	25	24.7	99	83-121

CAS No.	Surrogate Recoveries	BSP	Limits
1868-53-7	Dibromofluoromethane	103%	87-116%
17060-07-0	1,2-Dichloroethane-D4	98%	76-127%
2037-26-5	Toluene-D8	100%	86-112%
460-00-4	4-Bromofluorobenzene	101%	84-120%

Matrix Spike/Matrix Spike Duplicate Summary

Job Number: F78009
Account: TETTNOAK Tetra Tech, Inc
Project: Holloman AFB; Alamogordo, NM

Sample	File ID	DF	Analyzed	By	Prep Date	Prep Batch	Analytical Batch
F78052-5MS	H066144.D	1	11/18/10	MM	n/a	n/a	VH2463
F78052-5MSD	H066145.D	1	11/18/10	MM	n/a	n/a	VH2463
F78052-5	H066143.D	1	11/18/10	MM	n/a	n/a	VH2463

The QC reported here applies to the following samples: **Method:** SW846 8260B

F78009-5, F78009-6, F78009-7, F78009-8, F78009-9, F78009-10, F78009-11, F78009-12

CAS No.	Compound	F78052-5 ug/kg	Q	Spike ug/kg	MS ug/kg	MS %	MSD ug/kg	MSD %	RPD	Limits Rec/RPD
67-64-1	Acetone	45 U		301	106	35*	107	36*	1	61-144/29
75-05-8	Acetonitrile	45 U		602	299	50*	323	55*	8	59-139/30
107-02-8	Acrolein	22 U		301	242	80	284	97	16	27-156/39
107-13-1	Acrylonitrile	22 U		301	186	62	189	64	2	55-144/24
107-05-1	Allyl chloride	22 U		60.2	45.1	75	50.1	85	11	41-152/24
71-43-2	Benzene	4.5 U		60.2	53.1	88	52.9	90	0	78-130/25
100-44-7	Benzyl Chloride	4.5 U		60.2	35.2	58*	32.7	56*	7	74-130/28
108-86-1	Bromobenzene	4.5 U		60.2	53.5	89	54.9	93	3	78-123/30
74-97-5	Bromochloromethane	4.5 U		60.2	52.0	86	48.3	82	7	72-122/23
75-27-4	Bromodichloromethane	4.5 U		60.2	52.8	88	52.1	89	1	73-122/25
75-25-2	Bromoform	4.5 U		60.2	41.5	69*	39.9	68*	4	70-139/26
104-51-8	n-Butylbenzene	4.5 U		60.2	52.0	86	54.2	92	4	80-138/31
135-98-8	sec-Butylbenzene	4.5 U		60.2	54.1	90	54.3	92	0	82-132/29
98-06-6	tert-Butylbenzene	4.5 U		60.2	54.4	90	55.4	94	2	79-130/29
108-90-7	Chlorobenzene	4.5 U		60.2	52.8	88	53.9	92	2	83-122/23
75-00-3	Chloroethane	4.5 U		60.2	48.2	80	50.2	85	4	61-153/31
67-66-3	Chloroform	4.5 U		60.2	54.7	91	54.6	93	0	79-129/27
544-10-5	1-Chlorohexane	4.5 U		60.2	49.3	82*	52.1	89	6	85-137/29
95-49-8	o-Chlorotoluene	4.5 U		60.2	52.6	87	53.8	91	2	77-123/31
106-43-4	p-Chlorotoluene	4.5 U		60.2	51.8	86	53.8	91	4	78-129/29
110-75-8	2-Chloroethyl vinyl ether	22 U		301	151	50*	138	47*	9	52-142/25
75-15-0	Carbon disulfide	4.5 U		60.2	41.8	69	44.0	75	5	61-142/27
56-23-5	Carbon tetrachloride	4.5 U		60.2	55.5	92	55.5	94	0	79-135/29
75-34-3	1,1-Dichloroethane	4.5 U		60.2	50.4	84	51.7	88	3	77-132/26
75-35-4	1,1-Dichloroethylene	4.5 U		60.2	45.9	76	48.6	83	6	66-132/27
563-58-6	1,1-Dichloropropene	4.5 U		60.2	52.2	87	53.2	90	2	81-133/26
96-12-8	1,2-Dibromo-3-chloropropane	4.5 U		60.2	31.3	52*	31.2	53*	0	67-129/29
106-93-4	1,2-Dibromoethane	4.5 U		60.2	35.4	59*	35.9	61*	1	77-126/24
107-06-2	1,2-Dichloroethane	4.5 U		60.2	49.3	82	48.5	82	2	78-129/24
78-87-5	1,2-Dichloropropane	4.5 U		60.2	47.9	80	49.0	83	2	74-127/27
142-28-9	1,3-Dichloropropane	4.5 U		60.2	37.0	61*	38.1	65*	3	78-118/26
594-20-7	2,2-Dichloropropane	4.5 U		60.2	53.5	89	52.1	89	3	80-137/28
124-48-1	Dibromochloromethane	4.5 U		60.2	40.6	67*	40.8	69*	0	78-117/27
75-71-8	Dichlorodifluoromethane	4.5 U		60.2	95.0	158	88.9	151	7	35-162/30
156-59-2	cis-1,2-Dichloroethylene	4.5 U		60.2	54.3	90	54.3	92	0	74-123/26
10061-01-5	cis-1,3-Dichloropropene	4.5 U		60.2	49.6	82	50.5	86	2	79-130/23

Matrix Spike/Matrix Spike Duplicate Summary

Job Number: F78009
Account: TETTNOAK Tetra Tech, Inc
Project: Holloman AFB; Alamogordo, NM

Sample	File ID	DF	Analyzed	By	Prep Date	Prep Batch	Analytical Batch
F78052-5MS	H066144.D	1	11/18/10	MM	n/a	n/a	VH2463
F78052-5MSD	H066145.D	1	11/18/10	MM	n/a	n/a	VH2463
F78052-5	H066143.D	1	11/18/10	MM	n/a	n/a	VH2463

The QC reported here applies to the following samples: **Method:** SW846 8260B

F78009-5, F78009-6, F78009-7, F78009-8, F78009-9, F78009-10, F78009-11, F78009-12

CAS No.	Compound	F78052-5 ug/kg	Q	Spike ug/kg	MS ug/kg	MS %	MSD ug/kg	MSD %	RPD	Limits Rec/RPD
1476-11-5	cis-1,4-Dichloro-2-Butene	22 U		60.2	33.3	55*	32.2	55*	3	71-126/28
541-73-1	m-Dichlorobenzene	4.5 U		60.2	54.5	90	55.2	94	1	82-126/29
95-50-1	o-Dichlorobenzene	4.5 U		60.2	50.7	84	51.9	88	2	83-123/28
106-46-7	p-Dichlorobenzene	4.5 U		60.2	54.2	90	55.1	94	2	84-124/28
156-60-5	trans-1,2-Dichloroethylene	4.5 U		60.2	51.3	85	51.2	87	0	77-129/27
10061-02-6	trans-1,3-Dichloropropene	4.5 U		60.2	41.7	69*	41.3	70*	1	87-131/27
100-41-4	Ethylbenzene	4.5 U		60.2	51.6	86	53.0	90	3	82-124/25
97-63-2	Ethyl methacrylate	22 U		60.2	30.0	50*	31.0	53*	3	78-118/30
76-13-1	Freon 113	4.5 U		60.2	52.0	86	53.7	91	3	62-147/29
591-78-6	2-Hexanone	22 U		301	126	42*	131	45*	4	67-130/29
87-68-3	Hexachlorobutadiene	4.5 U		60.2	65.7	109	66.2	113	1	77-150/36
110-54-3	Hexane	4.5 U		60.2	54.7	91	56.3	96	3	65-147/27
98-82-8	Isopropylbenzene	4.5 U		60.2	58.3	97	60.9	104	4	82-133/27
99-87-6	p-Isopropyltoluene	4.5 U		60.2	56.1	93	57.5	98	2	82-132/29
108-10-1	4-Methyl-2-pentanone	22 U		301	162	54*	169	57*	4	69-125/24
126-98-7	Methacrylonitrile	22 U		602	451	75	442	75	2	70-138/22
74-83-9	Methyl bromide	4.5 U		60.2	63.3	105	63.0	107	0	60-146/31
74-87-3	Methyl chloride	4.5 U		60.2	58.6	97	61.7	105	5	58-163/26
74-88-4	Methyl iodide	9.0 U		60.2	56.3	93	54.3	92	4	66-128/27
80-62-6	Methyl methacrylate	4.5 U		60.2	38.4	64*	39.2	67*	2	73-125/24
74-95-3	Methylene bromide	4.5 U		60.2	48.1	80	46.3	79	4	75-128/26
75-09-2	Methylene chloride	9.1		60.2	71.8	104	72.7	108	1	62-140/25
78-93-3	Methyl ethyl ketone	22 U		301	120	40*	124	42*	3	66-134/23
1634-04-4	Methyl Tert Butyl Ether	4.5 U		60.2	44.0	73	42.4	72	4	70-131/25
91-20-3	Naphthalene	4.5 U		60.2	36.6	61	36.9	63	1	59-143/31
76-01-7	Pentachloroethane	22 U		60.2	53.8	89	33.2	56*	47*	64-156/37
107-12-0	Propionitrile	45 U		602	389	65*	367	62*	6	73-133/23
103-65-1	n-Propylbenzene	4.5 U		60.2	52.4	87	54.8	93	4	78-129/29
100-42-5	Styrene	4.5 U		60.2	50.6	84	51.7	88	2	79-123/28
630-20-6	1,1,1,2-Tetrachloroethane	4.5 U		60.2	52.9	88	53.4	91	1	81-121/25
71-55-6	1,1,1-Trichloroethane	4.5 U		60.2	54.6	91	54.0	92	1	80-133/27
79-34-5	1,1,2,2-Tetrachloroethane	4.5 U		60.2	40.7	68*	39.2	67*	4	70-128/30
79-00-5	1,1,2-Trichloroethane	4.5 U		60.2	36.5	61*	36.5	62*	0	76-118/28
87-61-6	1,2,3-Trichlorobenzene	4.5 U		60.2	50.6	84	51.5	88	2	78-136/34
96-18-4	1,2,3-Trichloropropane	4.5 U		60.2	37.4	62*	37.5	64*	0	74-125/30
120-82-1	1,2,4-Trichlorobenzene	4.5 U		60.2	55.8	93	57.7	98	3	82-137/32

Matrix Spike/Matrix Spike Duplicate Summary

Job Number: F78009
Account: TETTNOAK Tetra Tech, Inc
Project: Holloman AFB; Alamogordo, NM

Sample	File ID	DF	Analyzed	By	Prep Date	Prep Batch	Analytical Batch
F78052-5MS	H066144.D	1	11/18/10	MM	n/a	n/a	VH2463
F78052-5MSD	H066145.D	1	11/18/10	MM	n/a	n/a	VH2463
F78052-5	H066143.D	1	11/18/10	MM	n/a	n/a	VH2463

The QC reported here applies to the following samples: **Method:** SW846 8260B

F78009-5, F78009-6, F78009-7, F78009-8, F78009-9, F78009-10, F78009-11, F78009-12

CAS No.	Compound	F78052-5 ug/kg	Q	Spike ug/kg	MS ug/kg	MS %	MSD ug/kg	MSD %	RPD	Limits Rec/RPD
95-63-6	1,2,4-Trimethylbenzene	4.5 U		60.2	56.2	93	58.2	99	3	77-129/29
108-67-8	1,3,5-Trimethylbenzene	4.5 U		60.2	55.2	92	56.0	95	1	79-129/31
127-18-4	Tetrachloroethylene	4.5 U		60.2	63.1	105	78.7	134*	22	79-132/27
108-88-3	Toluene	4.5 U		60.2	48.4	80	50.0	85	3	80-123/26
79-01-6	Trichloroethylene	4.5 U		60.2	56.5	94	55.9	95	1	78-132/28
75-69-4	Trichlorofluoromethane	4.5 U		60.2	59.5	99	58.8	100	1	67-149/29
110-57-6	Trans-1,4-Dichloro-2-Butene	22 U		60.2	35.6	59*	35.7	61*	0	74-138/30
75-01-4	Vinyl chloride	4.5 U		60.2	48.7	81	49.9	85	2	60-145/29
108-05-4	Vinyl Acetate	22 U		301	191	63	176	60	8	25-164/35
	m,p-Xylene	9.0 U		120	108	90	112	95	4	82-128/25
95-47-6	o-Xylene	4.5 U		60.2	52.4	87	52.6	89	0	82-126/25

CAS No.	Surrogate Recoveries	MS	MSD	F78052-5	Limits
1868-53-7	Dibromofluoromethane	104%	104%	110%	80-121%
2037-26-5	Toluene-D8	90%	90%	77%	71-130%
460-00-4	4-Bromofluorobenzene	107%	103%	99%	59-148%
17060-07-0	1,2-Dichloroethane-D4	101%	94%	110%	77-123%

Matrix Spike/Matrix Spike Duplicate Summary

Job Number: F78009
Account: TETTNOAK Tetra Tech, Inc
Project: Holloman AFB; Alamogordo, NM

Sample	File ID	DF	Analyzed	By	Prep Date	Prep Batch	Analytical Batch
F78038-3MS	G0068556.D	1	11/18/10	MM	n/a	n/a	VG2581
F78038-3MSD	G0068557.D	1	11/18/10	MM	n/a	n/a	VG2581
F78038-3	G0068555.D	1	11/18/10	MM	n/a	n/a	VG2581

The QC reported here applies to the following samples: **Method:** SW846 8260B

F78009-1, F78009-2, F78009-3, F78009-4

CAS No.	Compound	F78038-3 ug/kg	Q	Spike ug/kg	MS ug/kg	MS %	MSD ug/kg	MSD %	RPD	Limits Rec/RPD
67-64-1	Acetone	67 U		314	91.9	29*	95.8	31*	4	61-144/29
75-05-8	Acetonitrile	67 U		629	355	56*	339	55*	5	59-139/30
107-02-8	Acrolein	33 U		314	288	92	292	95	1	27-156/39
107-13-1	Acrylonitrile	33 U		314	180	57	171	55	5	55-144/24
107-05-1	Allyl chloride	33 U		62.9	66.7	106	69.7	113	4	41-152/24
71-43-2	Benzene	6.7 U		62.9	61.8	98	64.6	105	4	78-130/25
100-44-7	Benzyl Chloride	6.7 U		62.9	44.7	71*	42.8	69*	4	74-130/28
108-86-1	Bromobenzene	6.7 U		62.9	65.3	104	62.2	101	5	78-123/30
74-97-5	Bromochloromethane	6.7 U		62.9	56.8	90	57.8	94	2	72-122/23
75-27-4	Bromodichloromethane	6.7 U		62.9	60.4	96	60.8	98	1	73-122/25
75-25-2	Bromoform	6.7 U		62.9	49.0	78	49.8	81	2	70-139/26
104-51-8	n-Butylbenzene	6.7 U		62.9	59.5	95	61.1	99	3	80-138/31
135-98-8	sec-Butylbenzene	6.7 U		62.9	71.7	114	73.8	119	3	82-132/29
98-06-6	tert-Butylbenzene	6.7 U		62.9	69.6	111	71.6	116	3	79-130/29
108-90-7	Chlorobenzene	6.7 U		62.9	62.8	100	65.0	105	3	83-122/23
75-00-3	Chloroethane	6.7 U		62.9	86.0	137	97.6	158*	13	61-153/31
67-66-3	Chloroform	6.7 U		62.9	65.9	105	67.3	109	2	79-129/27
544-10-5	1-Chlorohexane	6.7 U		62.9	53.0	84*	54.9	89	4	85-137/29
95-49-8	o-Chlorotoluene	6.7 U		62.9	67.9	108	67.6	109	0	77-123/31
106-43-4	p-Chlorotoluene	6.7 U		62.9	67.5	107	67.4	109	0	78-129/29
110-75-8	2-Chloroethyl vinyl ether	33 U		314	239	76	253	82	6	52-142/25
75-15-0	Carbon disulfide	6.7 U		62.9	56.7	90	63.8	103	12	61-142/27
56-23-5	Carbon tetrachloride	6.7 U		62.9	70.9	113	73.8	119	4	79-135/29
75-34-3	1,1-Dichloroethane	6.7 U		62.9	62.3	99	64.6	105	4	77-132/26
75-35-4	1,1-Dichloroethylene	6.7 U		62.9	59.2	94	64.0	104	8	66-132/27
563-58-6	1,1-Dichloropropene	6.7 U		62.9	64.7	103	68.9	112	6	81-133/26
96-12-8	1,2-Dibromo-3-chloropropane	6.7 U		62.9	38.9	62*	43.9	71	12	67-129/29
106-93-4	1,2-Dibromoethane	6.7 U		62.9	48.1	77	49.1	79	2	77-126/24
107-06-2	1,2-Dichloroethane	6.7 U		62.9	58.7	93	58.7	95	0	78-129/24
78-87-5	1,2-Dichloropropane	6.7 U		62.9	57.0	91	60.5	98	6	74-127/27
142-28-9	1,3-Dichloropropane	6.7 U		62.9	48.1	77*	51.3	83	6	78-118/26
594-20-7	2,2-Dichloropropane	6.7 U		62.9	64.5	103	70.8	115	9	80-137/28
124-48-1	Dibromochloromethane	6.7 U		62.9	53.4	85	56.5	91	6	78-117/27
75-71-8	Dichlorodifluoromethane	6.7 U		62.9	87.6	139	92.8	150	6	35-162/30
156-59-2	cis-1,2-Dichloroethylene	6.7 U		62.9	61.3	98	64.9	105	6	74-123/26
10061-01-5	cis-1,3-Dichloropropene	6.7 U		62.9	59.3	94	60.7	98	2	79-130/23

Matrix Spike/Matrix Spike Duplicate Summary

Job Number: F78009
Account: TETTNOAK Tetra Tech, Inc
Project: Holloman AFB; Alamogordo, NM

Sample	File ID	DF	Analyzed	By	Prep Date	Prep Batch	Analytical Batch
F78038-3MS	G0068556.D	1	11/18/10	MM	n/a	n/a	VG2581
F78038-3MSD	G0068557.D	1	11/18/10	MM	n/a	n/a	VG2581
F78038-3	G0068555.D	1	11/18/10	MM	n/a	n/a	VG2581

The QC reported here applies to the following samples: **Method:** SW846 8260B

F78009-1, F78009-2, F78009-3, F78009-4

CAS No.	Compound	F78038-3 ug/kg	Q	Spike ug/kg	MS ug/kg	MS %	MSD ug/kg	MSD %	RPD	Limits Rec/RPD
1476-11-5	cis-1,4-Dichloro-2-Butene	33 U		62.9	49.1	78	43.9	71	11	71-126/28
541-73-1	m-Dichlorobenzene	6.7 U		62.9	64.7	103	66.8	108	3	82-126/29
95-50-1	o-Dichlorobenzene	6.7 U		62.9	62.3	99	61.4	99	1	83-123/28
106-46-7	p-Dichlorobenzene	6.7 U		62.9	66.1	105	65.6	106	1	84-124/28
156-60-5	trans-1,2-Dichloroethylene	6.7 U		62.9	60.9	97	65.4	106	7	77-129/27
10061-02-6	trans-1,3-Dichloropropene	6.7 U		62.9	49.5	79*	52.9	86*	7	87-131/27
100-41-4	Ethylbenzene	6.7 U		62.9	63.8	101	66.7	108	4	82-124/25
97-63-2	Ethyl methacrylate	33 U		62.9	46.3	74*	48.0	78	4	78-118/30
76-13-1	Freon 113	6.7 U		62.9	71.2	113	74.4	120	4	62-147/29
591-78-6	2-Hexanone	33 U		314	137	44*	145	47*	6	67-130/29
87-68-3	Hexachlorobutadiene	6.7 U		62.9	62.0	99	62.7	102	1	77-150/36
110-54-3	Hexane	6.7 U		62.9	72.8	116	77.9	126	7	65-147/27
98-82-8	Isopropylbenzene	6.7 U		62.9	72.8	116	77.4	125	6	82-133/27
99-87-6	p-Isopropyltoluene	6.7 U		62.9	73.6	117	75.6	122	3	82-132/29
108-10-1	4-Methyl-2-pentanone	33 U		314	199	63*	206	67*	3	69-125/24
126-98-7	Methacrylonitrile	33 U		629	468	74	469	76	0	70-138/22
74-83-9	Methyl bromide	6.7 U		62.9	110	175*	123	199*	11	60-146/31
74-87-3	Methyl chloride	6.7 U		62.9	72.0	115	77.2	125	7	58-163/26
74-88-4	Methyl iodide	13 U		62.9	65.0	103	69.2	112	6	66-128/27
80-62-6	Methyl methacrylate	6.7 U		62.9	47.8	76	46.2	75	3	73-125/24
74-95-3	Methylene bromide	6.7 U		62.9	53.1	84	53.7	87	1	75-128/26
75-09-2	Methylene chloride	13.7		62.9	116	163*	104	146*	11	62-140/25
78-93-3	Methyl ethyl ketone	33 U		314	144	46*	132	43*	9	66-134/23
1634-04-4	Methyl Tert Butyl Ether	6.7 U		62.9	50.8	81	51.8	84	2	70-131/25
91-20-3	Naphthalene	6.7 U		62.9	46.0	73	43.9	71	5	59-143/31
76-01-7	Pentachloroethane	33 U		62.9	78.8	125	79.3	128	1	64-156/37
107-12-0	Propionitrile	67 U		629	389	62*	388	63*	0	73-133/23
103-65-1	n-Propylbenzene	6.7 U		62.9	69.0	110	69.6	113	1	78-129/29
100-42-5	Styrene	6.7 U		62.9	53.4	85	55.1	89	3	79-123/28
630-20-6	1,1,1,2-Tetrachloroethane	6.7 U		62.9	62.0	99	65.5	106	5	81-121/25
71-55-6	1,1,1-Trichloroethane	6.7 U		62.9	68.1	108	73.1	118	7	80-133/27
79-34-5	1,1,2,2-Tetrachloroethane	6.7 U		62.9	50.6	80	49.7	80	2	70-128/30
79-00-5	1,1,2-Trichloroethane	6.7 U		62.9	46.6	74*	51.7	84	10	76-118/28
87-61-6	1,2,3-Trichlorobenzene	6.7 U		62.9	58.1	92	54.7	89	6	78-136/34
96-18-4	1,2,3-Trichloropropane	6.7 U		62.9	47.9	76	49.1	79	2	74-125/30
120-82-1	1,2,4-Trichlorobenzene	6.7 U		62.9	54.5	87	54.7	89	0	82-137/32

Matrix Spike/Matrix Spike Duplicate Summary

Job Number: F78009
Account: TETTNOAK Tetra Tech, Inc
Project: Holloman AFB; Alamogordo, NM

Sample	File ID	DF	Analyzed	By	Prep Date	Prep Batch	Analytical Batch
F78038-3MS	G0068556.D	1	11/18/10	MM	n/a	n/a	VG2581
F78038-3MSD	G0068557.D	1	11/18/10	MM	n/a	n/a	VG2581
F78038-3	G0068555.D	1	11/18/10	MM	n/a	n/a	VG2581

The QC reported here applies to the following samples: **Method:** SW846 8260B

F78009-1, F78009-2, F78009-3, F78009-4

CAS No.	Compound	F78038-3 ug/kg	Q	Spike ug/kg	MS ug/kg	MS %	MSD ug/kg	MSD %	RPD	Limits Rec/RPD
95-63-6	1,2,4-Trimethylbenzene	2.3	I	62.9	72.4	112	73.1	115	1	77-129/29
108-67-8	1,3,5-Trimethylbenzene	6.7 U		62.9	69.2	110	70.9	115	2	79-129/31
127-18-4	Tetrachloroethylene	6.7 U		62.9	64.0	102	68.1	110	6	79-132/27
108-88-3	Toluene	6.7 U		62.9	59.8	95	62.6	101	5	80-123/26
79-01-6	Trichloroethylene	6.7 U		62.9	68.1	108	70.4	114	3	78-132/28
75-69-4	Trichlorofluoromethane	6.7 U		62.9	82.2	131	89.6	145	9	67-149/29
110-57-6	Trans-1,4-Dichloro-2-Butene	33 U		62.9	45.8	73*	47.0	76	3	74-138/30
75-01-4	Vinyl chloride	6.7 U		62.9	66.7	106	72.8	118	9	60-145/29
108-05-4	Vinyl Acetate	33 U		314	170	54	161	52	5	25-164/35
	m,p-Xylene	13 U		126	133	106	139	113	4	82-128/25
95-47-6	o-Xylene	6.7 U		62.9	60.9	97	64.7	105	6	82-126/25

CAS No.	Surrogate Recoveries	MS	MSD	F78038-3	Limits
1868-53-7	Dibromofluoromethane	104%	103%	108%	80-121%
2037-26-5	Toluene-D8	97%	96%	93%	71-130%
460-00-4	4-Bromofluorobenzene	99%	98%	87%	59-148%
17060-07-0	1,2-Dichloroethane-D4	96%	102%	104%	77-123%

Matrix Spike/Matrix Spike Duplicate Summary

Job Number: F78009
Account: TETTNOAK Tetra Tech, Inc
Project: Holloman AFB; Alamogordo, NM

Sample	File ID	DF	Analyzed	By	Prep Date	Prep Batch	Analytical Batch
F78009-24MS	H066175.D	1	11/19/10	MM	n/a	n/a	VH2464
F78009-24MSD	H066176.D	1	11/19/10	MM	n/a	n/a	VH2464
F78009-24 [a]	H066174.D	1	11/19/10	MM	n/a	n/a	VH2464

The QC reported here applies to the following samples: **Method:** SW846 8260B

F78009-13, F78009-14, F78009-15, F78009-16, F78009-17, F78009-21, F78009-25, F78009-27

CAS No.	Compound	F78009-24 ug/kg	Q	Spike ug/kg	MS ug/kg	MS %	MSD ug/kg	MSD %	RPD	Limits Rec/RPD
67-64-1	Acetone	ND		310	109	35*	115	38*	5	61-144/29
75-05-8	Acetonitrile	ND		620	294	47*	338	55*	14	59-139/30
107-02-8	Acrolein	ND		310	263	85	429	140	48*	27-156/39
107-13-1	Acrylonitrile	ND		310	203	65	215	70	6	55-144/24
107-05-1	Allyl chloride	ND		62	56.9	92	51.9	85	9	41-152/24
71-43-2	Benzene	ND		62	62.9	101	58.5	96	7	78-130/25
100-44-7	Benzyl Chloride	ND		62	43.0	69*	42.7	70*	1	74-130/28
108-86-1	Bromobenzene	ND		62	66.3	107	59.5	97	11	78-123/30
74-97-5	Bromochloromethane	ND		62	57.2	92	55.3	90	3	72-122/23
75-27-4	Bromodichloromethane	ND		62	61.0	98	57.6	94	6	73-122/25
75-25-2	Bromoform	ND		62	50.7	82	46.2	76	9	70-139/26
104-51-8	n-Butylbenzene	ND		62	64.8	105	59.9	98	8	80-138/31
135-98-8	sec-Butylbenzene	ND		62	66.6	107	61.1	100	9	82-132/29
98-06-6	tert-Butylbenzene	ND		62	67.3	109	59.4	97	12	79-130/29
108-90-7	Chlorobenzene	ND		62	63.5	102	59.8	98	6	83-122/23
75-00-3	Chloroethane	ND		62	60.9	98	55.9	91	9	61-153/31
67-66-3	Chloroform	ND		62	64.9	105	61.2	100	6	79-129/27
544-10-5	1-Chlorohexane	ND		62	62.3	100	58.4	95	6	85-137/29
95-49-8	o-Chlorotoluene	ND		62	65.3	105	59.6	97	9	77-123/31
106-43-4	p-Chlorotoluene	ND		62	65.0	105	59.0	96	10	78-129/29
110-75-8	2-Chloroethyl vinyl ether	ND		310	202	65	209	68	3	52-142/25
75-15-0	Carbon disulfide	ND		62	51.9	84	46.6	76	11	61-142/27
56-23-5	Carbon tetrachloride	ND		62	68.4	110	61.2	100	11	79-135/29
75-34-3	1,1-Dichloroethane	ND		62	58.8	95	57.7	94	2	77-132/26
75-35-4	1,1-Dichloroethylene	ND		62	57.7	93	51.9	85	11	66-132/27
563-58-6	1,1-Dichloropropene	ND		62	63.6	103	58.2	95	9	81-133/26
96-12-8	1,2-Dibromo-3-chloropropane	ND		62	35.0	56*	35.0	57*	0	67-129/29
106-93-4	1,2-Dibromoethane	ND		62	44.0	71*	43.0	70*	2	77-126/24
107-06-2	1,2-Dichloroethane	ND		62	57.1	92	54.1	88	5	78-129/24
78-87-5	1,2-Dichloropropane	ND		62	54.9	89	55.3	90	1	74-127/27
142-28-9	1,3-Dichloropropane	ND		62	43.6	70*	42.5	69*	3	78-118/26
594-20-7	2,2-Dichloropropane	ND		62	66.2	107	59.0	96	12	80-137/28
124-48-1	Dibromochloromethane	ND		62	48.9	79	46.8	76*	4	78-117/27
75-71-8	Dichlorodifluoromethane	ND		62	113	182*	101	165*	11	35-162/30
156-59-2	cis-1,2-Dichloroethylene	ND		62	64.2	104	61.7	101	4	74-123/26
10061-01-5	cis-1,3-Dichloropropene	ND		62	59.3	96	58.6	96	1	79-130/23

Matrix Spike/Matrix Spike Duplicate Summary

Job Number: F78009
Account: TETTNOAK Tetra Tech, Inc
Project: Holloman AFB; Alamogordo, NM

Sample	File ID	DF	Analyzed	By	Prep Date	Prep Batch	Analytical Batch
F78009-24MS	H066175.D	1	11/19/10	MM	n/a	n/a	VH2464
F78009-24MSD	H066176.D	1	11/19/10	MM	n/a	n/a	VH2464
F78009-24 [a]	H066174.D	1	11/19/10	MM	n/a	n/a	VH2464

The QC reported here applies to the following samples: **Method:** SW846 8260B

F78009-13, F78009-14, F78009-15, F78009-16, F78009-17, F78009-21, F78009-25, F78009-27

CAS No.	Compound	F78009-24 ug/kg	Q	Spike ug/kg	MS ug/kg	MS %	MSD ug/kg	MSD %	RPD	Limits Rec/RPD
1476-11-5	cis-1,4-Dichloro-2-Butene	ND		62	39.6	64*	38.2	62*	4	71-126/28
541-73-1	m-Dichlorobenzene	ND		62	64.7	104	60.6	99	7	82-126/29
95-50-1	o-Dichlorobenzene	ND		62	60.7	98	58.7	96	3	83-123/28
106-46-7	p-Dichlorobenzene	ND		62	64.3	104	60.7	99	6	84-124/28
156-60-5	trans-1,2-Dichloroethylene	ND		62	60.8	98	54.1	88	12	77-129/27
10061-02-6	trans-1,3-Dichloropropene	ND		62	49.5	80*	50.8	83*	3	87-131/27
100-41-4	Ethylbenzene	ND		62	64.3	104	58.9	96	9	82-124/25
97-63-2	Ethyl methacrylate	ND		62	32.4	52*	35.1	57*	8	78-118/30
76-13-1	Freon 113	ND		62	62.5	101	56.4	92	10	62-147/29
591-78-6	2-Hexanone	ND		310	144	46*	154	50*	7	67-130/29
87-68-3	Hexachlorobutadiene	ND		62	78.8	127	71.1	116	10	77-150/36
110-54-3	Hexane	ND		62	62.9	101	59.5	97	6	65-147/27
98-82-8	Isopropylbenzene	ND		62	73.1	118	67.9	111	7	82-133/27
99-87-6	p-Isopropyltoluene	ND		62	69.3	112	62.3	102	11	82-132/29
108-10-1	4-Methyl-2-pentanone	ND		310	189	61*	197	64*	4	69-125/24
126-98-7	Methacrylonitrile	ND		620	496	80	505	83	2	70-138/22
74-83-9	Methyl bromide	ND		62	81.6	132	69.0	113	17	60-146/31
74-87-3	Methyl chloride	ND		62	71.0	115	67.4	110	5	58-163/26
74-88-4	Methyl iodide	ND		62	66.3	107	58.7	96	12	66-128/27
80-62-6	Methyl methacrylate	ND		62	46.6	75	46.2	76	1	73-125/24
74-95-3	Methylene bromide	ND		62	53.5	86	53.2	87	1	75-128/26
75-09-2	Methylene chloride	8.5	J	62	146	222*	115	174*	24	62-140/25
78-93-3	Methyl ethyl ketone	ND		310	132	43*	142	46*	7	66-134/23
1634-04-4	Methyl Tert Butyl Ether	ND		62	50.0	81	50.5	83	1	70-131/25
91-20-3	Naphthalene	ND		62	42.0	68	42.8	70	2	59-143/31
76-01-7	Pentachloroethane	ND		62	69.3	112	60.9	100	13	64-156/37
107-12-0	Propionitrile	ND		620	393	63*	434	71*	10	73-133/23
103-65-1	n-Propylbenzene	ND		62	65.2	105	59.5	97	9	78-129/29
100-42-5	Styrene	ND		62	60.4	97	58.1	95	4	79-123/28
630-20-6	1,1,1,2-Tetrachloroethane	ND		62	62.3	100	60.3	99	3	81-121/25
71-55-6	1,1,1-Trichloroethane	ND		62	67.7	109	60.2	98	12	80-133/27
79-34-5	1,1,2,2-Tetrachloroethane	ND		62	46.0	74	45.2	74	2	70-128/30
79-00-5	1,1,2-Trichloroethane	ND		62	41.4	67*	43.4	71*	5	76-118/28
87-61-6	1,2,3-Trichlorobenzene	ND		62	58.3	94	58.1	95	0	78-136/34
96-18-4	1,2,3-Trichloropropane	ND		62	44.9	72*	44.5	73*	1	74-125/30
120-82-1	1,2,4-Trichlorobenzene	ND		62	65.1	105	60.3	99	8	82-137/32

Matrix Spike/Matrix Spike Duplicate Summary

Job Number: F78009
Account: TETTNOAK Tetra Tech, Inc
Project: Holloman AFB; Alamogordo, NM

Sample	File ID	DF	Analyzed	By	Prep Date	Prep Batch	Analytical Batch
F78009-24MS	H066175.D	1	11/19/10	MM	n/a	n/a	VH2464
F78009-24MSD	H066176.D	1	11/19/10	MM	n/a	n/a	VH2464
F78009-24 [a]	H066174.D	1	11/19/10	MM	n/a	n/a	VH2464

The QC reported here applies to the following samples: **Method:** SW846 8260B

F78009-13, F78009-14, F78009-15, F78009-16, F78009-17, F78009-21, F78009-25, F78009-27

CAS No.	Compound	F78009-24 ug/kg	Q	Spike ug/kg	MS ug/kg	MS %	MSD ug/kg	MSD %	RPD	Limits Rec/RPD
95-63-6	1,2,4-Trimethylbenzene	ND		62	65.6	106	58.6	96	11	77-129/29
108-67-8	1,3,5-Trimethylbenzene	ND		62	67.6	109	61.2	100	10	79-129/31
127-18-4	Tetrachloroethylene	ND		62	72.6	117	66.0	108	10	79-132/27
108-88-3	Toluene	ND		62	59.3	96	56.3	92	5	80-123/26
79-01-6	Trichloroethylene	ND		62	65.3	105	59.0	96	10	78-132/28
75-69-4	Trichlorofluoromethane	ND		62	74.8	121	64.6	106	15	67-149/29
110-57-6	Trans-1,4-Dichloro-2-Butene	ND		62	43.7	70*	39.6	65*	10	74-138/30
75-01-4	Vinyl chloride	ND		62	60.9	98	53.8	88	12	60-145/29
108-05-4	Vinyl Acetate	ND		310	178	57	202	66	13	25-164/35
	m,p-Xylene	ND		124	127	102	120	98	6	82-128/25
95-47-6	o-Xylene	ND		62	64.1	103	59.5	97	7	82-126/25

CAS No.	Surrogate Recoveries	MS	MSD	F78009-24	Limits
1868-53-7	Dibromofluoromethane	103%	104%	101%	80-121%
2037-26-5	Toluene-D8	89%	90%	78%	71-130%
460-00-4	4-Bromofluorobenzene	106%	101%	103%	59-148%
17060-07-0	1,2-Dichloroethane-D4	96%	96%	101%	77-123%

(a) Confirmation run for surrogate recoveries.

Matrix Spike/Matrix Spike Duplicate Summary

Job Number: F78009
Account: TETTNOAK Tetra Tech, Inc
Project: Holloman AFB; Alamogordo, NM

Sample	File ID	DF	Analyzed	By	Prep Date	Prep Batch	Analytical Batch
F78104-1MS	G0068596.D	1	11/19/10	MM	n/a	n/a	VG2582
F78104-1MSD	G0068597.D	1	11/19/10	MM	n/a	n/a	VG2582
F78104-1	G0068595.D	1	11/19/10	MM	n/a	n/a	VG2582

The QC reported here applies to the following samples: **Method:** SW846 8260B

F78009-33, F78009-34, F78009-35

CAS No.	Compound	F78104-1 ug/kg	Q	Spike ug/kg	MS ug/kg	MS %	MSD ug/kg	MSD %	RPD	Limits Rec/RPD
67-64-1	Acetone	50 U		273	82.2	30*	55.6	21*	39*	61-144/29
75-05-8	Acetonitrile	50 U		547	343	63	324	62	6	59-139/30
107-02-8	Acrolein	25 U		273	226	83	162	62	33	27-156/39
107-13-1	Acrylonitrile	25 U		273	154	56	133	51*	15	55-144/24
107-05-1	Allyl chloride	25 U		54.7	53.6	98	40.5	77	28*	41-152/24
71-43-2	Benzene	5.0 U		54.7	57.2	105	49.9	95	14	78-130/25
100-44-7	Benzyl Chloride	5.0 U		54.7	39.4	72*	31.2	59*	23	74-130/28
108-86-1	Bromobenzene	5.0 U		54.7	54.6	100	44.7	85	20	78-123/30
74-97-5	Bromochloromethane	5.0 U		54.7	53.1	97	46.3	88	14	72-122/23
75-27-4	Bromodichloromethane	5.0 U		54.7	55.4	101	49.0	93	12	73-122/25
75-25-2	Bromoform	5.0 U		54.7	45.0	82	34.7	66*	26	70-139/26
104-51-8	n-Butylbenzene	5.0 U		54.7	44.1	81	33.8	64*	26	80-138/31
135-98-8	sec-Butylbenzene	5.0 U		54.7	56.9	104	44.0	84	26	82-132/29
98-06-6	tert-Butylbenzene	5.0 U		54.7	58.0	106	46.7	89	22	79-130/29
108-90-7	Chlorobenzene	5.0 U		54.7	56.4	103	45.2	86	22	83-122/23
75-00-3	Chloroethane	5.0 U		54.7	53.0	97	50.7	97	4	61-153/31
67-66-3	Chloroform	5.0 U		54.7	58.6	107	52.9	101	10	79-129/27
544-10-5	1-Chlorohexane	5.0 U		54.7	45.3	83*	33.5	64*	30*	85-137/29
95-49-8	o-Chlorotoluene	5.0 U		54.7	56.9	104	46.4	88	20	77-123/31
106-43-4	p-Chlorotoluene	5.0 U		54.7	57.6	105	45.1	86	24	78-129/29
110-75-8	2-Chloroethyl vinyl ether	25 U		273	240	88	178	68	30*	52-142/25
75-15-0	Carbon disulfide	5.0 U		54.7	50.9	93	34.5	66	38*	61-142/27
56-23-5	Carbon tetrachloride	5.0 U		54.7	64.8	118	54.1	103	18	79-135/29
75-34-3	1,1-Dichloroethane	5.0 U		54.7	54.5	100	48.9	93	11	77-132/26
75-35-4	1,1-Dichloroethylene	5.0 U		54.7	51.5	94	34.5	66	40*	66-132/27
563-58-6	1,1-Dichloropropene	5.0 U		54.7	59.4	109	52.4	100	13	81-133/26
96-12-8	1,2-Dibromo-3-chloropropane	5.0 U		54.7	37.2	68	32.8	62*	13	67-129/29
106-93-4	1,2-Dibromoethane	5.0 U		54.7	44.1	81	38.4	73*	14	77-126/24
107-06-2	1,2-Dichloroethane	5.0 U		54.7	53.7	98	48.4	92	10	78-129/24
78-87-5	1,2-Dichloropropane	5.0 U		54.7	52.5	96	46.5	89	12	74-127/27
142-28-9	1,3-Dichloropropane	5.0 U		54.7	45.2	83	38.0	72*	17	78-118/26
594-20-7	2,2-Dichloropropane	5.0 U		54.7	57.9	106	50.0	95	15	80-137/28
124-48-1	Dibromochloromethane	5.0 U		54.7	49.8	91	42.1	80	17	78-117/27
75-71-8	Dichlorodifluoromethane	5.0 U		54.7	56.4	103	53.6	102	5	35-162/30
156-59-2	cis-1,2-Dichloroethylene	5.0 U		54.7	57.9	106	50.5	96	14	74-123/26
10061-01-5	cis-1,3-Dichloropropene	5.0 U		54.7	52.9	97	44.5	85	17	79-130/23

Matrix Spike/Matrix Spike Duplicate Summary

Job Number: F78009
Account: TETTNOAK Tetra Tech, Inc
Project: Holloman AFB; Alamogordo, NM

Sample	File ID	DF	Analyzed	By	Prep Date	Prep Batch	Analytical Batch
F78104-1MS	G0068596.D	1	11/19/10	MM	n/a	n/a	VG2582
F78104-1MSD	G0068597.D	1	11/19/10	MM	n/a	n/a	VG2582
F78104-1	G0068595.D	1	11/19/10	MM	n/a	n/a	VG2582

The QC reported here applies to the following samples: **Method:** SW846 8260B

F78009-33, F78009-34, F78009-35

CAS No.	Compound	F78104-1 ug/kg	Q	Spike ug/kg	MS ug/kg	MS %	MSD ug/kg	MSD %	RPD	Limits Rec/RPD
1476-11-5	cis-1,4-Dichloro-2-Butene	25 U		54.7	40.4	74	35.3	67*	13	71-126/28
541-73-1	m-Dichlorobenzene	5.0 U		54.7	55.3	101	40.2	77*	32*	82-126/29
95-50-1	o-Dichlorobenzene	5.0 U		54.7	52.1	95	38.9	74*	29*	83-123/28
106-46-7	p-Dichlorobenzene	5.0 U		54.7	55.2	101	41.1	78*	29*	84-124/28
156-60-5	trans-1,2-Dichloroethylene	5.0 U		54.7	55.0	101	36.4	69*	41*	77-129/27
10061-02-6	trans-1,3-Dichloropropene	5.0 U		54.7	47.5	87	40.4	77*	16	87-131/27
100-41-4	Ethylbenzene	5.0 U		54.7	57.5	105	45.3	86	24	82-124/25
97-63-2	Ethyl methacrylate	25 U		54.7	39.8	73*	27.4	52*	37*	78-118/30
76-13-1	Freon 113	5.0 U		54.7	58.6	107	41.3	79	35*	62-147/29
591-78-6	2-Hexanone	25 U		273	135	49*	119	45*	13	67-130/29
87-68-3	Hexachlorobutadiene	5.0 U		54.7	36.5	67*	26.3	50*	32	77-150/36
110-54-3	Hexane	5.0 U		54.7	57.4	105	36.5	70	45*	65-147/27
98-82-8	Isopropylbenzene	5.0 U		54.7	64.9	119	47.2	90	32*	82-133/27
99-87-6	p-Isopropyltoluene	5.0 U		54.7	59.2	108	45.8	87	26	82-132/29
108-10-1	4-Methyl-2-pentanone	25 U		273	193	71	169	64*	13	69-125/24
126-98-7	Methacrylonitrile	25 U		547	436	80	387	74	12	70-138/22
74-83-9	Methyl bromide	5.0 U		54.7	68.1	125	64.5	123	5	60-146/31
74-87-3	Methyl chloride	5.0 U		54.7	46.5	85	44.3	84	5	58-163/26
74-88-4	Methyl iodide	10 U		54.7	57.3	105	37.7	72	41*	66-128/27
80-62-6	Methyl methacrylate	5.0 U		54.7	43.2	79	39.0	74	10	73-125/24
74-95-3	Methylene bromide	5.0 U		54.7	49.9	91	42.9	82	15	75-128/26
75-09-2	Methylene chloride	16.1	B	54.7	108	168*	64.4	92	51*	62-140/25
78-93-3	Methyl ethyl ketone	25 U		273	131	48*	117	45*	11	66-134/23
1634-04-4	Methyl Tert Butyl Ether	5.0 U		54.7	45.7	84	31.3	60*	37*	70-131/25
91-20-3	Naphthalene	5.0 U		54.7	32.4	59	21.6	41*	40*	59-143/31
76-01-7	Pentachloroethane	25 U		54.7	65.8	120	54.4	104	19	64-156/37
107-12-0	Propionitrile	50 U		547	396	72*	330	63*	18	73-133/23
103-65-1	n-Propylbenzene	5.0 U		54.7	56.9	104	46.0	88	21	78-129/29
100-42-5	Styrene	5.0 U		54.7	46.9	86	36.5	70*	25	79-123/28
630-20-6	1,1,1,2-Tetrachloroethane	5.0 U		54.7	56.3	103	45.2	86	22	81-121/25
71-55-6	1,1,1-Trichloroethane	5.0 U		54.7	63.0	115	53.9	103	16	80-133/27
79-34-5	1,1,2,2-Tetrachloroethane	5.0 U		54.7	44.2	81	38.9	74	13	70-128/30
79-00-5	1,1,2-Trichloroethane	5.0 U		54.7	46.6	85	38.0	72*	20	76-118/28
87-61-6	1,2,3-Trichlorobenzene	5.0 U		54.7	36.4	67*	22.2	42*	48*	78-136/34
96-18-4	1,2,3-Trichloropropane	5.0 U		54.7	43.4	79	37.5	71*	15	74-125/30
120-82-1	1,2,4-Trichlorobenzene	5.0 U		54.7	37.1	68*	23.5	45*	45*	82-137/32

Matrix Spike/Matrix Spike Duplicate Summary

Job Number: F78009
Account: TETTNOAK Tetra Tech, Inc
Project: Holloman AFB; Alamogordo, NM

Sample	File ID	DF	Analyzed	By	Prep Date	Prep Batch	Analytical Batch
F78104-1MS	G0068596.D	1	11/19/10	MM	n/a	n/a	VG2582
F78104-1MSD	G0068597.D	1	11/19/10	MM	n/a	n/a	VG2582
F78104-1	G0068595.D	1	11/19/10	MM	n/a	n/a	VG2582

The QC reported here applies to the following samples: **Method:** SW846 8260B

F78009-33, F78009-34, F78009-35

CAS No.	Compound	F78104-1 ug/kg	Q	Spike ug/kg	MS ug/kg	MS %	MSD ug/kg	MSD %	RPD	Limits Rec/RPD
95-63-6	1,2,4-Trimethylbenzene	5.0 U		54.7	59.1	108	47.9	91	21	77-129/29
108-67-8	1,3,5-Trimethylbenzene	5.0 U		54.7	56.9	104	46.3	88	21	79-129/31
127-18-4	Tetrachloroethylene	5.0 U		54.7	58.6	107	46.7	89	23	79-132/27
108-88-3	Toluene	5.0 U		54.7	55.0	101	46.2	88	17	80-123/26
79-01-6	Trichloroethylene	5.0 U		54.7	61.7	113	54.0	103	13	78-132/28
75-69-4	Trichlorofluoromethane	5.0 U		54.7	50.9	93	46.6	89	9	67-149/29
110-57-6	Trans-1,4-Dichloro-2-Butene	25 U		54.7	38.7	71*	35.8	68*	8	74-138/30
75-01-4	Vinyl chloride	5.0 U		54.7	42.6	78	41.0	78	4	60-145/29
108-05-4	Vinyl Acetate	25 U		273	93.4	34	40.0	15*	80*	25-164/35
	m,p-Xylene	10 U		109	120	110	94.4	90	24	82-128/25
95-47-6	o-Xylene	5.0 U		54.7	54.8	100	42.4	81*	26*	82-126/25

CAS No.	Surrogate Recoveries	MS	MSD	F78104-1	Limits
1868-53-7	Dibromofluoromethane	102%	105%	110%	80-121%
2037-26-5	Toluene-D8	97%	97%	95%	71-130%
460-00-4	4-Bromofluorobenzene	94%	105%	106%	59-148%
17060-07-0	1,2-Dichloroethane-D4	91%	100%	108%	77-123%

Matrix Spike/Matrix Spike Duplicate Summary

Job Number: F78009
Account: TETTNOAK Tetra Tech, Inc
Project: Holloman AFB; Alamogordo, NM

Sample	File ID	DF	Analyzed	By	Prep Date	Prep Batch	Analytical Batch
F78145-1MS	H066219.D	1	11/20/10	MM	n/a	n/a	VH2465
F78145-1MSD	H066220.D	1	11/20/10	MM	n/a	n/a	VH2465
F78145-1	H066218.D	1	11/20/10	MM	n/a	n/a	VH2465

The QC reported here applies to the following samples: **Method:** SW846 8260B

F78009-18, F78009-19, F78009-20, F78009-22, F78009-23, F78009-24, F78009-26, F78009-28, F78009-29, F78009-30, F78009-31, F78009-32

CAS No.	Compound	F78145-1 ug/kg	Q	Spike ug/kg	MS ug/kg	MS %	MSD ug/kg	MSD %	RPD	Limits Rec/RPD
67-64-1	Acetone	56 U		299	108	36*	106	35*	2	61-144/29
75-05-8	Acetonitrile	56 U		598	371	62	335	55*	10	59-139/30
107-02-8	Acrolein	28 U		299	276	92	379	125	31	27-156/39
107-13-1	Acrylonitrile	28 U		299	204	68	198	65	3	55-144/24
107-05-1	Allyl chloride	28 U		59.8	48.3	81	56.3	93	15	41-152/24
71-43-2	Benzene	5.6 U		59.8	52.9	89	59.7	98	12	78-130/25
100-44-7	Benzyl Chloride	5.6 U		59.8	35.8	60*	35.6	59*	1	74-130/28
108-86-1	Bromobenzene	5.6 U		59.8	50.3	84	57.0	94	12	78-123/30
74-97-5	Bromochloromethane	5.6 U		59.8	47.2	79	53.2	88	12	72-122/23
75-27-4	Bromodichloromethane	5.6 U		59.8	50.9	85	54.5	90	7	73-122/25
75-25-2	Bromoform	5.6 U		59.8	40.1	67*	38.9	64*	3	70-139/26
104-51-8	n-Butylbenzene	5.6 U		59.8	50.1	84	58.6	97	16	80-138/31
135-98-8	sec-Butylbenzene	5.6 U		59.8	51.2	86	60.9	100	17	82-132/29
98-06-6	tert-Butylbenzene	5.6 U		59.8	50.9	85	61.9	102	20	79-130/29
108-90-7	Chlorobenzene	5.6 U		59.8	52.5	88	57.3	94	9	83-122/23
75-00-3	Chloroethane	5.6 U		59.8	54.3	91	64.9	107	18	61-153/31
67-66-3	Chloroform	5.6 U		59.8	53.1	89	59.5	98	11	79-129/27
544-10-5	1-Chlorohexane	5.6 U		59.8	50.5	84*	57.8	95	13	85-137/29
95-49-8	o-Chlorotoluene	5.6 U		59.8	49.6	83	59.6	98	18	77-123/31
106-43-4	p-Chlorotoluene	5.6 U		59.8	50.4	84	59.0	97	16	78-129/29
110-75-8	2-Chloroethyl vinyl ether	28 U		299	148	50*	141	46*	5	52-142/25
75-15-0	Carbon disulfide	5.6 U		59.8	41.5	69	48.6	80	16	61-142/27
56-23-5	Carbon tetrachloride	5.6 U		59.8	54.1	91	61.9	102	13	79-135/29
75-34-3	1,1-Dichloroethane	5.6 U		59.8	50.3	84	57.0	94	12	77-132/26
75-35-4	1,1-Dichloroethylene	5.6 U		59.8	44.8	75	52.5	87	16	66-132/27
563-58-6	1,1-Dichloropropene	5.6 U		59.8	52.4	88	59.7	98	13	81-133/26
96-12-8	1,2-Dibromo-3-chloropropane	5.6 U		59.8	29.7	50*	33.9	56*	13	67-129/29
106-93-4	1,2-Dibromoethane	5.6 U		59.8	36.8	62*	38.1	63*	3	77-126/24
107-06-2	1,2-Dichloroethane	5.6 U		59.8	47.3	79	49.9	82	5	78-129/24
78-87-5	1,2-Dichloropropane	5.6 U		59.8	49.7	83	53.1	88	7	74-127/27
142-28-9	1,3-Dichloropropane	5.6 U		59.8	37.9	63*	38.1	63*	1	78-118/26
594-20-7	2,2-Dichloropropane	5.6 U		59.8	51.8	87	58.9	97	13	80-137/28
124-48-1	Dibromochloromethane	5.6 U		59.8	40.9	68*	42.0	69*	3	78-117/27
75-71-8	Dichlorodifluoromethane	5.6 U		59.8	97.1	162	110	181*	12	35-162/30
156-59-2	cis-1,2-Dichloroethylene	5.6 U		59.8	53.2	89	59.5	98	11	74-123/26
10061-01-5	cis-1,3-Dichloropropene	5.6 U		59.8	49.7	83	53.8	89	8	79-130/23

Matrix Spike/Matrix Spike Duplicate Summary

Job Number: F78009
Account: TETTNOAK Tetra Tech, Inc
Project: Holloman AFB; Alamogordo, NM

Sample	File ID	DF	Analyzed	By	Prep Date	Prep Batch	Analytical Batch
F78145-1MS	H066219.D	1	11/20/10	MM	n/a	n/a	VH2465
F78145-1MSD	H066220.D	1	11/20/10	MM	n/a	n/a	VH2465
F78145-1	H066218.D	1	11/20/10	MM	n/a	n/a	VH2465

The QC reported here applies to the following samples: **Method:** SW846 8260B

F78009-18, F78009-19, F78009-20, F78009-22, F78009-23, F78009-24, F78009-26, F78009-28, F78009-29, F78009-30, F78009-31, F78009-32

CAS No.	Compound	F78145-1 ug/kg	Q	Spike ug/kg	MS ug/kg	MS %	MSD ug/kg	MSD %	RPD	Limits Rec/RPD
1476-11-5	cis-1,4-Dichloro-2-Butene	28 U		59.8	35.6	60*	38.2	63*	7	71-126/28
541-73-1	m-Dichlorobenzene	5.6 U		59.8	52.4	88	58.9	97	12	82-126/29
95-50-1	o-Dichlorobenzene	5.6 U		59.8	48.9	82*	55.5	91	13	83-123/28
106-46-7	p-Dichlorobenzene	5.6 U		59.8	50.2	84	59.3	98	17	84-124/28
156-60-5	trans-1,2-Dichloroethylene	5.6 U		59.8	48.9	82	55.9	92	13	77-129/27
10061-02-6	trans-1,3-Dichloropropene	5.6 U		59.8	43.4	73*	44.3	73*	2	87-131/27
100-41-4	Ethylbenzene	5.6 U		59.8	52.4	88	57.3	94	9	82-124/25
97-63-2	Ethyl methacrylate	28 U		59.8	32.8	55*	31.5	52*	4	78-118/30
76-13-1	Freon 113	5.6 U		59.8	50.1	84	55.5	91	10	62-147/29
591-78-6	2-Hexanone	28 U		299	139	47*	128	42*	8	67-130/29
87-68-3	Hexachlorobutadiene	5.6 U		59.8	58.5	98	68.4	113	16	77-150/36
110-54-3	Hexane	5.6 U		59.8	54.0	90	58.2	96	7	65-147/27
98-82-8	Isopropylbenzene	5.6 U		59.8	58.7	98	65.1	107	10	82-133/27
99-87-6	p-Isopropyltoluene	5.6 U		59.8	53.2	89	61.6	102	15	82-132/29
108-10-1	4-Methyl-2-pentanone	28 U		299	179	60*	173	57*	3	69-125/24
126-98-7	Methacrylonitrile	28 U		598	501	84	485	80	3	70-138/22
74-83-9	Methyl bromide	5.6 U		59.8	66.9	112	84.6	139	23	60-146/31
74-87-3	Methyl chloride	5.6 U		59.8	66.7	112	77.4	128	15	58-163/26
74-88-4	Methyl iodide	11 U		59.8	50.4	84	56.5	93	11	66-128/27
80-62-6	Methyl methacrylate	5.6 U		59.8	42.9	72*	44.0	73	3	73-125/24
74-95-3	Methylene bromide	5.6 U		59.8	44.9	75	49.2	81	9	75-128/26
75-09-2	Methylene chloride	11 U		59.8	48.1	80	60.7	100	23	62-140/25
78-93-3	Methyl ethyl ketone	28 U		299	134	45*	122	40*	9	66-134/23
1634-04-4	Methyl Tert Butyl Ether	5.6 U		59.8	44.1	74	45.1	74	2	70-131/25
91-20-3	Naphthalene	5.6 U		59.8	36.0	60	38.5	63	7	59-143/31
76-01-7	Pentachloroethane	28 U		59.8	53.9	90	62.3	103	14	64-156/37
107-12-0	Propionitrile	56 U		598	445	74	412	68*	8	73-133/23
103-65-1	n-Propylbenzene	5.6 U		59.8	50.0	84	60.7	100	19	78-129/29
100-42-5	Styrene	5.6 U		59.8	49.7	83	53.6	88	8	79-123/28
630-20-6	1,1,1,2-Tetrachloroethane	5.6 U		59.8	50.4	84	55.0	91	9	81-121/25
71-55-6	1,1,1-Trichloroethane	5.6 U		59.8	52.4	88	60.4	100	14	80-133/27
79-34-5	1,1,2,2-Tetrachloroethane	5.6 U		59.8	40.6	68*	42.0	69*	3	70-128/30
79-00-5	1,1,2-Trichloroethane	5.6 U		59.8	37.6	63*	37.6	62*	0	76-118/28
87-61-6	1,2,3-Trichlorobenzene	5.6 U		59.8	47.5	79	50.7	84	7	78-136/34
96-18-4	1,2,3-Trichloropropane	5.6 U		59.8	37.0	62*	38.9	64*	5	74-125/30
120-82-1	1,2,4-Trichlorobenzene	5.6 U		59.8	52.0	87	55.7	92	7	82-137/32

Matrix Spike/Matrix Spike Duplicate Summary

Job Number: F78009
Account: TETTNOAK Tetra Tech, Inc
Project: Holloman AFB; Alamogordo, NM

Sample	File ID	DF	Analyzed	By	Prep Date	Prep Batch	Analytical Batch
F78145-1MS	H066219.D	1	11/20/10	MM	n/a	n/a	VH2465
F78145-1MSD	H066220.D	1	11/20/10	MM	n/a	n/a	VH2465
F78145-1	H066218.D	1	11/20/10	MM	n/a	n/a	VH2465

The QC reported here applies to the following samples: **Method:** SW846 8260B

F78009-18, F78009-19, F78009-20, F78009-22, F78009-23, F78009-24, F78009-26, F78009-28, F78009-29, F78009-30, F78009-31, F78009-32

CAS No.	Compound	F78145-1 ug/kg	Q	Spike ug/kg	MS ug/kg	MS %	MSD ug/kg	MSD %	RPD	Limits Rec/RPD
95-63-6	1,2,4-Trimethylbenzene	5.6	U	59.8	52.1	87	62.2	103	18	77-129/29
108-67-8	1,3,5-Trimethylbenzene	5.6	U	59.8	52.0	87	61.1	101	16	79-129/31
127-18-4	Tetrachloroethylene	5.6	U	59.8	56.4	94	63.2	104	11	79-132/27
108-88-3	Toluene	5.6	U	59.8	49.1	82	53.7	89	9	80-123/26
79-01-6	Trichloroethylene	5.6	U	59.8	53.0	89	61.0	101	14	78-132/28
75-69-4	Trichlorofluoromethane	5.6	U	59.8	63.3	106	75.3	124	17	67-149/29
110-57-6	Trans-1,4-Dichloro-2-Butene	28	U	59.8	32.3	54*	39.0	64*	19	74-138/30
75-01-4	Vinyl chloride	5.6	U	59.8	53.6	90	62.8	104	16	60-145/29
108-05-4	Vinyl Acetate	28	U	299	197	66	173	57	13	25-164/35
	m,p-Xylene	11	U	120	106	89	119	98	12	82-128/25
95-47-6	o-Xylene	5.6	U	59.8	51.3	86	56.3	93	9	82-126/25

CAS No.	Surrogate Recoveries	MS	MSD	F78145-1	Limits
1868-53-7	Dibromofluoromethane	104%	103%	101%	80-121%
2037-26-5	Toluene-D8	89%	89%	80%	71-130%
460-00-4	4-Bromofluorobenzene	95%	100%	105%	59-148%
17060-07-0	1,2-Dichloroethane-D4	99%	95%	99%	77-123%

Matrix Spike/Matrix Spike Duplicate Summary

Job Number: F78009
Account: TETTNOAK Tetra Tech, Inc
Project: Holloman AFB; Alamogordo, NM

Sample	File ID	DF	Analyzed	By	Prep Date	Prep Batch	Analytical Batch
F78101-29MS	F046034.D	100	11/23/10	SH	n/a	n/a	VF1348
F78101-29MSD	F046035.D	100	11/23/10	SH	n/a	n/a	VF1348
F78101-29 [a]	F046026.D	100	11/23/10	SH	n/a	n/a	VF1348

The QC reported here applies to the following samples: **Method:** SW846 8260B

F78009-38, F78009-39

CAS No.	Compound	F78101-29 ug/l	Q	Spike ug/l	MS ug/l	MS %	MSD ug/l	MSD %	RPD	Limits Rec/RPD
67-64-1	Acetone	ND		12500	5000	40*	5990	48*	18*	59-134/14
75-05-8	Acetonitrile	ND		25000	17000	68	31500	126*	60*	57-123/15
107-02-8	Acrolein	ND		12500	8720	70	7200	58	19	33-157/21
107-13-1	Acrylonitrile	ND		12500	8980	72	11000	88	20*	62-124/13
107-05-1	Allyl chloride	ND		2500	2200	88	2000	80	10	48-136/13
71-43-2	Benzene	49.4		2500	2530	99	2310	90	9	83-124/11
100-44-7	Benzyl Chloride	ND		2500	2070	83	2350	94	13*	61-118/12
108-86-1	Bromobenzene	ND		2500	2350	94	2280	91	3	83-115/10
74-97-5	Bromochloromethane	ND		2500	2440	98	2420	97	1	78-112/10
75-27-4	Bromodichloromethane	ND		2500	2300	92	2240	90	3	76-116/10
75-25-2	Bromoform	ND		2500	2210	88	2440	98	10	68-128/11
104-51-8	n-Butylbenzene	ND		2500	2450	98	2430	97	1	84-124/10
135-98-8	sec-Butylbenzene	ND		2500	2370	95	2260	90	5	86-127/10
98-06-6	tert-Butylbenzene	ND		2500	2340	94	2260	90	3	83-126/10
108-90-7	Chlorobenzene	ND		2500	2500	100	2300	92	8	87-115/9
75-00-3	Chloroethane	ND		2500	2610	104	2420	97	8	54-166/20
67-66-3	Chloroform	ND		2500	2460	98	2300	92	7	85-123/10
544-10-5	1-Chlorohexane	ND		2500	2430	97	2350	94	3	87-128/10
95-49-8	o-Chlorotoluene	ND		2500	2350	94	2280	91	3	84-121/10
106-43-4	p-Chlorotoluene	ND		2500	2380	95	2340	94	2	84-120/10
110-75-8	2-Chloroethyl vinyl ether	ND		12500	9440	76	10400	83	10	63-125/24
75-15-0	Carbon disulfide	ND		2500	2450	98	2160	86	13*	67-147/12
56-23-5	Carbon tetrachloride	ND		2500	2670	107	2490	100	7	74-139/13
75-34-3	1,1-Dichloroethane	846		2500	3550	108	2900	82	20*	82-127/10
75-35-4	1,1-Dichloroethylene	1740		2500	4530	112	3830	84	17*	75-133/13
563-58-6	1,1-Dichloropropene	ND		2500	2470	99	2280	91	8	87-127/10
96-12-8	1,2-Dibromo-3-chloropropane	ND		2500	1850	74	2220	89	18*	61-118/15
106-93-4	1,2-Dibromoethane	ND		2500	2110	84	2370	95	12*	80-115/10
107-06-2	1,2-Dichloroethane	ND		2500	2220	89	2170	87	2	76-122/11
78-87-5	1,2-Dichloropropane	ND		2500	2380	95	2230	89	7	81-120/11
142-28-9	1,3-Dichloropropane	ND		2500	2120	85	2260	90	6	81-113/11
594-20-7	2,2-Dichloropropane	ND		2500	2390	96	2170	87	10	77-138/12
124-48-1	Dibromochloromethane	ND		2500	2390	96	2460	98	3	74-116/11
75-71-8	Dichlorodifluoromethane	ND		2500	1200	48	1290	52	7	34-158/22
156-59-2	cis-1,2-Dichloroethylene	5340		2500	10200	194* [b]	7070	69* [b]	36*	81-114/10
10061-01-5	cis-1,3-Dichloropropene	ND		2500	2320	93	2210	88	5	83-119/10

Matrix Spike/Matrix Spike Duplicate Summary

Job Number: F78009
Account: TETTNOAK Tetra Tech, Inc
Project: Holloman AFB; Alamogordo, NM

Sample	File ID	DF	Analyzed	By	Prep Date	Prep Batch	Analytical Batch
F78101-29MS	F046034.D	100	11/23/10	SH	n/a	n/a	VF1348
F78101-29MSD	F046035.D	100	11/23/10	SH	n/a	n/a	VF1348
F78101-29 [a]	F046026.D	100	11/23/10	SH	n/a	n/a	VF1348

The QC reported here applies to the following samples: **Method:** SW846 8260B

F78009-38, F78009-39

CAS No.	Compound	F78101-29 ug/l	Q	Spike ug/l	MS ug/l	MS %	MSD ug/l	MSD %	RPD	Limits Rec/RPD
1476-11-5	cis-1,4-Dichloro-2-Butene	ND		2500	2720	109	3310	132*	20	41-130/33
541-73-1	m-Dichlorobenzene	ND		2500	2410	96	2300	92	5	86-115/9
95-50-1	o-Dichlorobenzene	ND		2500	2370	95	2300	92	3	85-115/9
106-46-7	p-Dichlorobenzene	ND		2500	2330	93	2250	90	3	87-113/10
156-60-5	trans-1,2-Dichloroethylene	ND		2500	2220	89	2070	83	7	82-126/10
10061-02-6	trans-1,3-Dichloropropene	ND		2500	2360	94	2460	98	4	87-123/10
100-41-4	Ethylbenzene	ND		2500	2410	96	2330	93	3	87-118/10
97-63-2	Ethyl methacrylate	ND		2500	1840	74	2110	84	14*	68-110/11
76-13-1	Freon 113	115		2500	3320	128	2710	104	20*	74-139/13
591-78-6	2-Hexanone	ND		12500	7710	62	9440	76	20*	58-125/14
87-68-3	Hexachlorobutadiene	ND		2500	2600	104	2610	104	0	71-133/12
110-54-3	Hexane	ND		2500	2630	105	2670	107	2	71-134/11
98-82-8	Isopropylbenzene	ND		2500	2890	116	2740	110	5	87-131/10
99-87-6	p-Isopropyltoluene	ND		2500	2440	98	2270	91	7	83-125/9
108-10-1	4-Methyl-2-pentanone	ND		12500	9720	78	11900	95	20*	62-125/13
126-98-7	Methacrylonitrile	ND		25000	19800	79	23300	93	16	62-133/17
74-83-9	Methyl bromide	ND		2500	3200	128	2630	105	20	55-151/21
74-87-3	Methyl chloride	ND		2500	1770	71	1860	74	5	55-173/22
74-88-4	Methyl iodide	ND		2500	2580	103	2320	93	11	72-125/11
80-62-6	Methyl methacrylate	ND		2500	1790	72	2080	83	15*	63-115/10
74-95-3	Methylene bromide	ND		2500	2290	92	2360	94	3	81-116/10
75-09-2	Methylene chloride	658	B	2500	2980	93	3160	100	6	69-125/11
78-93-3	Methyl ethyl ketone	ND		12500	6720	54*	8410	67	22*	61-127/13
1634-04-4	Methyl Tert Butyl Ether	ND		2500	2130	85	2210	88	4	75-116/10
91-20-3	Naphthalene	ND		2500	1980	79	2350	94	17*	59-125/15
76-01-7	Pentachloroethane	ND		2500	2430	97	2360	94	3	82-111/8
107-12-0	Propionitrile	ND		25000	16300	65*	20700	83	24*	69-119/12
103-65-1	n-Propylbenzene	ND		2500	2440	98	2350	94	4	86-125/10
100-42-5	Styrene	ND		2500	2540	102	2370	95	7	78-118/11
630-20-6	1,1,1,2-Tetrachloroethane	ND		2500	2500	100	2270	91	10	81-119/10
71-55-6	1,1,1-Trichloroethane	ND		2500	2610	104	2320	93	12*	79-133/11
79-34-5	1,1,2,2-Tetrachloroethane	ND		2500	2070	83	2300	92	11	71-120/11
79-00-5	1,1,2-Trichloroethane	ND		2500	2240	90	2400	96	7	80-114/11
87-61-6	1,2,3-Trichlorobenzene	ND		2500	2420	97	2490	100	3	64-126/16
96-18-4	1,2,3-Trichloropropane	ND		2500	1880	75*	2160	86	14*	77-115/12
120-82-1	1,2,4-Trichlorobenzene	ND		2500	2570	103	2440	98	5	68-123/11

Matrix Spike/Matrix Spike Duplicate Summary

Job Number: F78009
Account: TETTNOAK Tetra Tech, Inc
Project: Holloman AFB; Alamogordo, NM

Sample	File ID	DF	Analyzed	By	Prep Date	Prep Batch	Analytical Batch
F78101-29MS	F046034.D	100	11/23/10	SH	n/a	n/a	VF1348
F78101-29MSD	F046035.D	100	11/23/10	SH	n/a	n/a	VF1348
F78101-29 [a]	F046026.D	100	11/23/10	SH	n/a	n/a	VF1348

The QC reported here applies to the following samples: **Method:** SW846 8260B

F78009-38, F78009-39

CAS No.	Compound	F78101-29 ug/l	Q	Spike ug/l	MS ug/l	MS %	MSD ug/l	MSD %	RPD	Limits Rec/RPD
95-63-6	1,2,4-Trimethylbenzene	ND		2500	2420	97	2350	94	3	82-120/10
108-67-8	1,3,5-Trimethylbenzene	ND		2500	2340	94	2290	92	2	83-123/10
127-18-4	Tetrachloroethylene	792		2500	3570	111	3160	95	12	80-131/12
108-88-3	Toluene	ND		2500	2430	97	2310	92	5	86-116/10
79-01-6	Trichloroethylene	644		2500	3130	99	2930	91	7	85-124/10
75-69-4	Trichlorofluoromethane	ND		2500	3020	121	2970	119	2	66-156/15
110-57-6	Trans-1,4-Dichloro-2-Butene	ND		2500	2590	104	3190	128	21	51-137/24
75-01-4	Vinyl chloride	154		2500	2430	91	2350	88	3	57-153/22
108-05-4	Vinyl Acetate	ND		12500	9920	79	10900	87	9	38-159/11
	m,p-Xylene	ND		5000	5020	100	4730	95	6	86-121/10
95-47-6	o-Xylene	ND		2500	2440	98	2320	93	5	83-121/10

CAS No.	Surrogate Recoveries	MS	MSD	F78101-29	Limits
1868-53-7	Dibromofluoromethane	105%	102%	104%	87-116%
17060-07-0	1,2-Dichloroethane-D4	92%	98%	93%	76-127%
2037-26-5	Toluene-D8	95%	98%	99%	86-112%
460-00-4	4-Bromofluorobenzene	90%	95%	94%	84-120%

(a) Sample vial(s) contained significant headspace; reported results are considered minimum values.
(b) Outside control limits due to high level in sample relative to spike amount.

Matrix Spike/Matrix Spike Duplicate Summary

Job Number: F78009
Account: TETTNOAK Tetra Tech, Inc
Project: Holloman AFB; Alamogordo, NM

Sample	File ID	DF	Analyzed	By	Prep Date	Prep Batch	Analytical Batch
F78009-37MS	F046062.D	1	11/24/10	SH	n/a	n/a	VF1350
F78009-37MSD	F046063.D	1	11/24/10	SH	n/a	n/a	VF1350
F78009-37	F046053.D	1	11/24/10	SH	n/a	n/a	VF1350

The QC reported here applies to the following samples: **Method:** SW846 8260B

F78009-37

CAS No.	Compound	F78009-37 ug/l	Q	Spike ug/l	MS ug/l	MS %	MSD ug/l	MSD %	RPD	Limits Rec/RPD
67-64-1	Acetone	ND		125	64.5	52*	67.0	54*	4	59-134/14
75-05-8	Acetonitrile	ND		250	241	96	247	99	2	57-123/15
107-02-8	Acrolein	ND		125	63.7	51	60.9	49	4	33-157/21
107-13-1	Acrylonitrile	ND		125	127	102	133	106	5	62-124/13
107-05-1	Allyl chloride	ND		25	20.9	84	22.7	91	8	48-136/13
71-43-2	Benzene	ND		25	24.1	96	24.7	99	2	83-124/11
100-44-7	Benzyl Chloride	ND		25	27.4	110	26.7	107	3	61-118/12
108-86-1	Bromobenzene	ND		25	25.3	101	25.9	104	2	83-115/10
74-97-5	Bromochloromethane	ND		25	24.1	96	25.6	102	6	78-112/10
75-27-4	Bromodichloromethane	ND		25	24.0	96	25.0	100	4	76-116/10
75-25-2	Bromoform	ND		25	26.3	105	26.8	107	2	68-128/11
104-51-8	n-Butylbenzene	ND		25	20.1	80*	23.0	92	13*	84-124/10
135-98-8	sec-Butylbenzene	ND		25	25.6	102	26.2	105	2	86-127/10
98-06-6	tert-Butylbenzene	ND		25	25.7	103	26.2	105	2	83-126/10
108-90-7	Chlorobenzene	ND		25	24.4	98	25.1	100	3	87-115/9
75-00-3	Chloroethane	ND		25	24.6	98	25.6	102	4	54-166/20
67-66-3	Chloroform	ND		25	24.5	98	25.3	101	3	85-123/10
544-10-5	1-Chlorohexane	ND		25	26.0	104	26.2	105	1	87-128/10
95-49-8	o-Chlorotoluene	ND		25	26.0	104	26.9	108	3	84-121/10
106-43-4	p-Chlorotoluene	ND		25	26.6	106	27.1	108	2	84-120/10
110-75-8	2-Chloroethyl vinyl ether	ND		125	ND	0*	ND	0*	nc	63-125/24
75-15-0	Carbon disulfide	ND		25	20.1	80	19.3	77	4	67-147/12
56-23-5	Carbon tetrachloride	ND		25	24.6	98	25.3	101	3	74-139/13
75-34-3	1,1-Dichloroethane	ND		25	22.9	92	24.5	98	7	82-127/10
75-35-4	1,1-Dichloroethylene	ND		25	21.9	88	22.1	88	1	75-133/13
563-58-6	1,1-Dichloropropene	ND		25	25.0	100	25.7	103	3	87-127/10
96-12-8	1,2-Dibromo-3-chloropropane	ND		25	28.5	114	29.3	117	3	61-118/15
106-93-4	1,2-Dibromoethane	ND		25	25.4	102	26.4	106	4	80-115/10
107-06-2	1,2-Dichloroethane	ND		25	23.9	96	24.3	97	2	76-122/11
78-87-5	1,2-Dichloropropane	ND		25	24.2	97	25.0	100	3	81-120/11
142-28-9	1,3-Dichloropropane	ND		25	24.6	98	25.1	100	2	81-113/11
594-20-7	2,2-Dichloropropane	ND		25	22.8	91	23.9	96	5	77-138/12
124-48-1	Dibromochloromethane	ND		25	25.2	101	25.7	103	2	74-116/11
75-71-8	Dichlorodifluoromethane	ND		25	27.8	111	31.8	127	13	34-158/22
156-59-2	cis-1,2-Dichloroethylene	ND		25	25.6	102	26.4	106	3	81-114/10
10061-01-5	cis-1,3-Dichloropropene	ND		25	23.6	94	24.8	99	5	83-119/10

Matrix Spike/Matrix Spike Duplicate Summary

Job Number: F78009
Account: TETTNOAK Tetra Tech, Inc
Project: Holloman AFB; Alamogordo, NM

Sample	File ID	DF	Analyzed	By	Prep Date	Prep Batch	Analytical Batch
F78009-37MS	F046062.D	1	11/24/10	SH	n/a	n/a	VF1350
F78009-37MSD	F046063.D	1	11/24/10	SH	n/a	n/a	VF1350
F78009-37	F046053.D	1	11/24/10	SH	n/a	n/a	VF1350

The QC reported here applies to the following samples: **Method:** SW846 8260B

F78009-37

CAS No.	Compound	F78009-37 ug/l	Q	Spike ug/l	MS ug/l	MS %	MSD ug/l	MSD %	RPD	Limits Rec/RPD
1476-11-5	cis-1,4-Dichloro-2-Butene	ND		25	21.8	87	21.1	84	3	41-130/33
541-73-1	m-Dichlorobenzene	ND		25	25.5	102	26.0	104	2	86-115/9
95-50-1	o-Dichlorobenzene	ND		25	25.4	102	25.7	103	1	85-115/9
106-46-7	p-Dichlorobenzene	ND		25	24.3	97	24.6	98	1	87-113/10
156-60-5	trans-1,2-Dichloroethylene	ND		25	22.9	92	23.5	94	3	82-126/10
10061-02-6	trans-1,3-Dichloropropene	ND		25	26.9	108	27.5	110	2	87-123/10
100-41-4	Ethylbenzene	ND		25	25.4	102	25.4	102	0	87-118/10
97-63-2	Ethyl methacrylate	ND		25	22.0	88	23.2	93	5	68-110/11
76-13-1	Freon 113	ND		25	24.8	99	23.5	94	5	74-139/13
591-78-6	2-Hexanone	ND		125	129	103	132	106	2	58-125/14
87-68-3	Hexachlorobutadiene	ND		25	27.0	108	28.0	112	4	71-133/12
110-54-3	Hexane	ND		25	22.7	91	23.9	96	5	71-134/11
98-82-8	Isopropylbenzene	ND		25	27.8	111	27.3	109	2	87-131/10
99-87-6	p-Isopropyltoluene	ND		25	26.5	106	26.7	107	1	83-125/9
108-10-1	4-Methyl-2-pentanone	ND		125	160	128*	164	131*	2	62-125/13
126-98-7	Methacrylonitrile	ND		250	261	104	269	108	3	62-133/17
74-83-9	Methyl bromide	ND		25	22.9	92	23.7	95	3	55-151/21
74-87-3	Methyl chloride	ND		25	25.9	104	30.2	121	15	55-173/22
74-88-4	Methyl iodide	ND		25	22.1	88	23.1	92	4	72-125/11
80-62-6	Methyl methacrylate	ND		25	21.9	88	23.1	92	5	63-115/10
74-95-3	Methylene bromide	ND		25	25.5	102	25.2	101	1	81-116/10
75-09-2	Methylene chloride	4.3	JB	25	24.7	82	25.7	86	4	69-125/11
78-93-3	Methyl ethyl ketone	ND		125	93.4	75	98.3	79	5	61-127/13
1634-04-4	Methyl Tert Butyl Ether	ND		25	23.8	95	25.5	102	7	75-116/10
91-20-3	Naphthalene	ND		25	27.1	108	28.2	113	4	59-125/15
76-01-7	Pentachloroethane	ND		25	24.9	100	25.1	100	1	82-111/8
107-12-0	Propionitrile	ND		250	253	101	259	104	2	69-119/12
103-65-1	n-Propylbenzene	ND		25	25.3	101	26.2	105	3	86-125/10
100-42-5	Styrene	ND		25	21.6	86	21.5	86	0	78-118/11
630-20-6	1,1,1,2-Tetrachloroethane	ND		25	26.2	105	25.9	104	1	81-119/10
71-55-6	1,1,1-Trichloroethane	ND		25	24.7	99	25.0	100	1	79-133/11
79-34-5	1,1,2,2-Tetrachloroethane	ND		25	27.6	110	28.6	114	4	71-120/11
79-00-5	1,1,2-Trichloroethane	ND		25	24.9	100	25.9	104	4	80-114/11
87-61-6	1,2,3-Trichlorobenzene	ND		25	26.5	106	27.3	109	3	64-126/16
96-18-4	1,2,3-Trichloropropane	ND		25	25.3	101	26.8	107	6	77-115/12
120-82-1	1,2,4-Trichlorobenzene	ND		25	25.7	103	26.4	106	3	68-123/11

Matrix Spike/Matrix Spike Duplicate Summary

Job Number: F78009
Account: TETTNOAK Tetra Tech, Inc
Project: Holloman AFB; Alamogordo, NM

Sample	File ID	DF	Analyzed	By	Prep Date	Prep Batch	Analytical Batch
F78009-37MS	F046062.D	1	11/24/10	SH	n/a	n/a	VF1350
F78009-37MSD	F046063.D	1	11/24/10	SH	n/a	n/a	VF1350
F78009-37	F046053.D	1	11/24/10	SH	n/a	n/a	VF1350

The QC reported here applies to the following samples: **Method:** SW846 8260B

F78009-37

CAS No.	Compound	F78009-37 ug/l	Q	Spike ug/l	MS ug/l	MS %	MSD ug/l	MSD %	RPD	Limits Rec/RPD
95-63-6	1,2,4-Trimethylbenzene	ND		25	25.4	102	26.1	104	3	82-120/10
108-67-8	1,3,5-Trimethylbenzene	ND		25	23.6	94	23.9	96	1	83-123/10
127-18-4	Tetrachloroethylene	ND		25	26.0	104	25.4	102	2	80-131/12
108-88-3	Toluene	ND		25	25.0	100	25.5	102	2	86-116/10
79-01-6	Trichloroethylene	ND		25	24.9	100	25.2	101	1	85-124/10
75-69-4	Trichlorofluoromethane	ND		25	27.6	110	17.3	69	46*	66-156/15
110-57-6	Trans-1,4-Dichloro-2-Butene	ND		25	22.1	88	24.0	96	8	51-137/24
75-01-4	Vinyl chloride	ND		25	22.9	92	26.4	106	14	57-153/22
108-05-4	Vinyl Acetate	ND		125	120	96	127	102	6	38-159/11
	m,p-Xylene	ND		50	52.4	105	52.9	106	1	86-121/10
95-47-6	o-Xylene	ND		25	23.5	94	23.9	96	2	83-121/10

CAS No.	Surrogate Recoveries	MS	MSD	F78009-37	Limits
1868-53-7	Dibromofluoromethane	98%	103%	101%	87-116%
17060-07-0	1,2-Dichloroethane-D4	100%	100%	96%	76-127%
2037-26-5	Toluene-D8	99%	99%	105%	86-112%
460-00-4	4-Bromofluorobenzene	98%	102%	100%	84-120%

Matrix Spike/Matrix Spike Duplicate Summary

Job Number: F78009
Account: TETTNOAK Tetra Tech, Inc
Project: Holloman AFB; Alamogordo, NM

Sample	File ID	DF	Analyzed	By	Prep Date	Prep Batch	Analytical Batch
F78210-7MS	F046122.D	1	11/30/10	LD	n/a	n/a	VF1353
F78210-7MSD	F046123.D	1	11/30/10	LD	n/a	n/a	VF1353
F78210-7	F046118.D	1	11/30/10	LD	n/a	n/a	VF1353

The QC reported here applies to the following samples: **Method:** SW846 8260B

F78009-36

CAS No.	Compound	F78210-7 ug/l	Q	Spike ug/l	MS ug/l	MS %	MSD ug/l	MSD %	RPD	Limits Rec/RPD
67-64-1	Acetone	ND		125	57.2	46*	57.4	46*	0	59-134/14
75-05-8	Acetonitrile	ND		250	368	147*	220	88	50*	57-123/15
107-02-8	Acrolein	ND		125	111	89	96.3	77	14	33-157/21
107-13-1	Acrylonitrile	ND		125	117	94	113	90	3	62-124/13
107-05-1	Allyl chloride	ND		25	22.4	90	21.3	85	5	48-136/13
71-43-2	Benzene	ND		25	23.3	93	22.1	88	5	83-124/11
100-44-7	Benzyl Chloride	ND		25	23.7	95	24.1	96	2	61-118/12
108-86-1	Bromobenzene	ND		25	22.3	89	21.8	87	2	83-115/10
74-97-5	Bromochloromethane	ND		25	24.3	97	23.8	95	2	78-112/10
75-27-4	Bromodichloromethane	ND		25	23.0	92	22.6	90	2	76-116/10
75-25-2	Bromoform	ND		25	21.7	87	22.3	89	3	68-128/11
104-51-8	n-Butylbenzene	ND		25	22.1	88	21.7	87	2	84-124/10
135-98-8	sec-Butylbenzene	ND		25	25.0	100	24.9	100	0	86-127/10
98-06-6	tert-Butylbenzene	ND		25	23.8	95	24.1	96	1	83-126/10
108-90-7	Chlorobenzene	ND		25	23.5	94	22.5	90	4	87-115/9
75-00-3	Chloroethane	ND		25	25.7	103	24.7	99	4	54-166/20
67-66-3	Chloroform	ND		25	24.5	98	22.8	91	7	85-123/10
544-10-5	1-Chlorohexane	ND		25	26.0	104	24.9	100	4	87-128/10
95-49-8	o-Chlorotoluene	ND		25	22.9	92	22.8	91	0	84-121/10
106-43-4	p-Chlorotoluene	ND		25	23.3	93	23.7	95	2	84-120/10
110-75-8	2-Chloroethyl vinyl ether	ND		125	ND	0*	ND	0*	nc	63-125/24
75-15-0	Carbon disulfide	ND		25	17.5	70	15.8	63*	10	67-147/12
56-23-5	Carbon tetrachloride	ND		25	24.1	96	22.9	92	5	74-139/13
75-34-3	1,1-Dichloroethane	0.60	J	25	22.8	89	22.0	86	4	82-127/10
75-35-4	1,1-Dichloroethylene	ND		25	20.7	83	19.0	76	9	75-133/13
563-58-6	1,1-Dichloropropene	ND		25	24.4	98	24.2	97	1	87-127/10
96-12-8	1,2-Dibromo-3-chloropropane	ND		25	22.0	88	21.6	86	2	61-118/15
106-93-4	1,2-Dibromoethane	ND		25	22.7	91	22.4	90	1	80-115/10
107-06-2	1,2-Dichloroethane	ND		25	22.8	91	22.1	88	3	76-122/11
78-87-5	1,2-Dichloropropane	ND		25	23.7	95	22.7	91	4	81-120/11
142-28-9	1,3-Dichloropropane	ND		25	22.3	89	22.2	89	0	81-113/11
594-20-7	2,2-Dichloropropane	ND		25	24.0	96	22.7	91	6	77-138/12
124-48-1	Dibromochloromethane	ND		25	22.8	91	22.2	89	3	74-116/11
75-71-8	Dichlorodifluoromethane	ND		25	26.7	107	27.8	111	4	34-158/22
156-59-2	cis-1,2-Dichloroethylene	0.57	J	25	25.6	100	24.1	94	6	81-114/10
10061-01-5	cis-1,3-Dichloropropene	ND		25	23.2	93	22.3	89	4	83-119/10

Matrix Spike/Matrix Spike Duplicate Summary

Job Number: F78009
Account: TETTNOAK Tetra Tech, Inc
Project: Holloman AFB; Alamogordo, NM

Sample	File ID	DF	Analyzed	By	Prep Date	Prep Batch	Analytical Batch
F78210-7MS	F046122.D	1	11/30/10	LD	n/a	n/a	VF1353
F78210-7MSD	F046123.D	1	11/30/10	LD	n/a	n/a	VF1353
F78210-7	F046118.D	1	11/30/10	LD	n/a	n/a	VF1353

The QC reported here applies to the following samples: **Method:** SW846 8260B

F78009-36

CAS No.	Compound	F78210-7 ug/l	Q	Spike ug/l	MS ug/l	MS %	MSD ug/l	MSD %	RPD	Limits Rec/RPD
1476-11-5	cis-1,4-Dichloro-2-Butene	ND		25	14.3	57	13.3	53	7	41-130/33
541-73-1	m-Dichlorobenzene	ND		25	23.2	93	22.4	90	4	86-115/9
95-50-1	o-Dichlorobenzene	ND		25	23.0	92	22.4	90	3	85-115/9
106-46-7	p-Dichlorobenzene	ND		25	22.0	88	21.8	87	1	87-113/10
156-60-5	trans-1,2-Dichloroethylene	ND		25	22.1	88	21.1	84	5	82-126/10
10061-02-6	trans-1,3-Dichloropropene	ND		25	23.9	96	24.8	99	4	87-123/10
100-41-4	Ethylbenzene	ND		25	23.1	92	23.0	92	0	87-118/10
97-63-2	Ethyl methacrylate	ND		25	18.8	75	19.1	76	2	68-110/11
76-13-1	Freon 113	ND		25	26.8	107	23.3	93	14*	74-139/13
591-78-6	2-Hexanone	ND		125	89.0	71	91.4	73	3	58-125/14
87-68-3	Hexachlorobutadiene	ND		25	25.1	100	26.1	104	4	71-133/12
110-54-3	Hexane	ND		25	24.9	100	23.0	92	8	71-134/11
98-82-8	Isopropylbenzene	ND		25	26.5	106	25.8	103	3	87-131/10
99-87-6	p-Isopropyltoluene	ND		25	25.8	103	24.7	99	4	83-125/9
108-10-1	4-Methyl-2-pentanone	ND		125	114	91	118	94	3	62-125/13
126-98-7	Methacrylonitrile	ND		250	240	96	235	94	2	62-133/17
74-83-9	Methyl bromide	ND		25	27.0	108	24.5	98	10	55-151/21
74-87-3	Methyl chloride	ND		25	25.2	101	26.1	104	4	55-173/22
74-88-4	Methyl iodide	ND		25	21.8	87	19.9	80	9	72-125/11
80-62-6	Methyl methacrylate	ND		25	19.2	77	19.3	77	1	63-115/10
74-95-3	Methylene bromide	ND		25	24.3	97	23.1	92	5	81-116/10
75-09-2	Methylene chloride	ND		25	20.4	82	19.6	78	4	69-125/11
78-93-3	Methyl ethyl ketone	ND		125	82.3	66	81.8	65	1	61-127/13
1634-04-4	Methyl Tert Butyl Ether	ND		25	22.6	90	21.7	87	4	75-116/10
91-20-3	Naphthalene	ND		25	23.0	92	23.7	95	3	59-125/15
76-01-7	Pentachloroethane	ND		25	21.4	86	21.6	86	1	82-111/8
107-12-0	Propionitrile	ND		250	242	97	236	94	3	69-119/12
103-65-1	n-Propylbenzene	ND		25	23.7	95	23.3	93	2	86-125/10
100-42-5	Styrene	ND		25	21.1	84	21.2	85	0	78-118/11
630-20-6	1,1,1,2-Tetrachloroethane	ND		25	23.3	93	22.8	91	2	81-119/10
71-55-6	1,1,1-Trichloroethane	ND		25	24.8	99	23.1	92	7	79-133/11
79-34-5	1,1,2,2-Tetrachloroethane	ND		25	22.6	90	22.7	91	0	71-120/11
79-00-5	1,1,2-Trichloroethane	ND		25	22.0	88	22.1	88	0	80-114/11
87-61-6	1,2,3-Trichlorobenzene	ND		25	25.5	102	25.6	102	0	64-126/16
96-18-4	1,2,3-Trichloropropane	ND		25	20.5	82	20.8	83	1	77-115/12
120-82-1	1,2,4-Trichlorobenzene	ND		25	25.8	103	25.6	102	1	68-123/11

Matrix Spike/Matrix Spike Duplicate Summary

Job Number: F78009
Account: TETTNOAK Tetra Tech, Inc
Project: Holloman AFB; Alamogordo, NM

Sample	File ID	DF	Analyzed	By	Prep Date	Prep Batch	Analytical Batch
F78210-7MS	F046122.D	1	11/30/10	LD	n/a	n/a	VF1353
F78210-7MSD	F046123.D	1	11/30/10	LD	n/a	n/a	VF1353
F78210-7	F046118.D	1	11/30/10	LD	n/a	n/a	VF1353

The QC reported here applies to the following samples: **Method:** SW846 8260B

F78009-36

CAS No.	Compound	F78210-7 ug/l	Q	Spike ug/l	MS ug/l	MS %	MSD ug/l	MSD %	RPD	Limits Rec/RPD
95-63-6	1,2,4-Trimethylbenzene	ND		25	22.8	91	22.4	90	2	82-120/10
108-67-8	1,3,5-Trimethylbenzene	ND		25	21.5	86	21.4	86	0	83-123/10
127-18-4	Tetrachloroethylene	ND		25	24.5	98	24.2	97	1	80-131/12
108-88-3	Toluene	ND		25	22.1	88	22.5	90	2	86-116/10
79-01-6	Trichloroethylene	ND		25	24.4	98	23.9	96	2	85-124/10
75-69-4	Trichlorofluoromethane	ND		25	31.9	128	29.9	120	6	66-156/15
110-57-6	Trans-1,4-Dichloro-2-Butene	ND		25	15.9	64	15.0	60	6	51-137/24
75-01-4	Vinyl chloride	ND		25	26.1	104	24.5	98	6	57-153/22
108-05-4	Vinyl Acetate	ND		125	111	89	111	89	0	38-159/11
	m,p-Xylene	ND		50	48.3	97	48.0	96	1	86-121/10
95-47-6	o-Xylene	ND		25	21.4	86	21.1	84	1	83-121/10

CAS No.	Surrogate Recoveries	MS	MSD	F78210-7	Limits
1868-53-7	Dibromofluoromethane	107%	106%	103%	87-116%
17060-07-0	1,2-Dichloroethane-D4	103%	103%	99%	76-127%
2037-26-5	Toluene-D8	97%	98%	103%	86-112%
460-00-4	4-Bromofluorobenzene	95%	98%	95%	84-120%

Instrument Performance Check (BFB)

Job Number: F78009
Account: TETTNOAK Tetra Tech, Inc
Project: Holloman AFB; Alamogordo, NM

Sample: VF1347-BFB
Lab File ID: F045992.D
Instrument ID: GCMSF
Injection Date: 11/22/10
Injection Time: 12:44

m/e	Ion Abundance Criteria	Raw Abundance	% Relative Abundance		Pass/Fail
50	15.0 - 40.0% of mass 95	15718	27.3		Pass
75	30.0 - 60.0% of mass 95	27421	47.6		Pass
95	Base peak, 100% relative abundance	57578	100.0		Pass
96	5.0 - 9.0% of mass 95	4241	7.37		Pass
173	Less than 2.0% of mass 174	0	0.00	(0.00) [a]	Pass
174	50.0 - 100.0% of mass 95	42280	73.4		Pass
175	5.0 - 9.0% of mass 174	2750	4.78	(6.50) [a]	Pass
176	95.0 - 101.0% of mass 174	41402	71.9	(97.9) [a]	Pass
177	5.0 - 9.0% of mass 176	2772	4.81	(6.70) [b]	Pass

(a) Value is % of mass 174
(b) Value is % of mass 176

This check applies to the following Samples, MS, MSD, Blanks, and Standards:

Lab Sample ID	Lab File ID	Date Analyzed	Time Analyzed	Hours Lapsed	Client Sample ID
VF1347-IC1347	F045993.D	11/22/10	13:13	00:29	Initial cal 1
VF1347-IC1347	F045994.D	11/22/10	13:38	00:54	Initial cal 2
VF1347-IC1347	F045995.D	11/22/10	14:03	01:19	Initial cal 3
VF1347-ICC1347	F045996.D	11/22/10	14:28	01:44	Initial cal 4
VF1347-IC1347	F045997.D	11/22/10	14:53	02:09	Initial cal 5
VF1347-IC1347	F045998.D	11/22/10	15:18	02:34	Initial cal 6
VF1347-ICV1347	F045999.D	11/22/10	15:44	03:00	Initial cal verification 3
VF1347-BS	F046000.D	11/22/10	16:09	03:25	Blank Spike
VF1347-MB	F046001.D	11/22/10	16:34	03:50	Method Blank
ZZZZZZ	F046002.D	11/22/10	16:59	04:15	(unrelated sample)
ZZZZZZ	F046003.D	11/22/10	17:25	04:41	(unrelated sample)
ZZZZZZ	F046004.D	11/22/10	17:50	05:06	(unrelated sample)
ZZZZZZ	F046005.D	11/22/10	18:15	05:31	(unrelated sample)
ZZZZZZ	F046006.D	11/22/10	18:40	05:56	(unrelated sample)
ZZZZZZ	F046007.D	11/22/10	19:05	06:21	(unrelated sample)
F78101-29	F046008.D	11/22/10	19:30	06:46	(used for QC only; not part of job F78009)
ZZZZZZ	F046009.D	11/22/10	19:55	07:11	(unrelated sample)
ZZZZZZ	F046010.D	11/22/10	20:20	07:36	(unrelated sample)
ZZZZZZ	F046011.D	11/22/10	20:46	08:02	(unrelated sample)
ZZZZZZ	F046012.D	11/22/10	21:11	08:27	(unrelated sample)
ZZZZZZ	F046013.D	11/22/10	21:36	08:52	(unrelated sample)
ZZZZZZ	F046014.D	11/22/10	22:01	09:17	(unrelated sample)
ZZZZZZ	F046015.D	11/22/10	22:26	09:42	(unrelated sample)
ZZZZZZ	F046017.D	11/22/10	23:16	10:32	(unrelated sample)

Instrument Performance Check (BFB)

Job Number: F78009
Account: TETTNOAK Tetra Tech, Inc
Project: Holloman AFB; Alamogordo, NM

Sample: VF1347-BFB
Lab File ID: F045992.D
Instrument ID: GCMSF
Injection Date: 11/22/10
Injection Time: 12:44

Lab Sample ID	Lab File ID	Date Analyzed	Time Analyzed	Hours Lapsed	Client Sample ID
F78101-29MS	F046018.D	11/22/10	23:41	10:57	Matrix Spike
F78101-29MSD	F046019.D	11/23/10	00:06	11:22	Matrix Spike Duplicate

Instrument Performance Check (BFB)

Job Number: F78009
Account: TETTNOAK Tetra Tech, Inc
Project: Holloman AFB; Alamogordo, NM

Sample: VF1348-BFB
Lab File ID: F046022.D
Instrument ID: GCMSF
Injection Date: 11/23/10
Injection Time: 09:16

m/e	Ion Abundance Criteria	Raw Abundance	% Relative Abundance		Pass/Fail
50	15.0 - 40.0% of mass 95	8549	21.4		Pass
75	30.0 - 60.0% of mass 95	18133	45.4		Pass
95	Base peak, 100% relative abundance	39952	100.0		Pass
96	5.0 - 9.0% of mass 95	2604	6.52		Pass
173	Less than 2.0% of mass 174	146	0.37	(0.46) [a]	Pass
174	50.0 - 100.0% of mass 95	31621	79.1		Pass
175	5.0 - 9.0% of mass 174	2385	5.97	(7.54) [a]	Pass
176	95.0 - 101.0% of mass 174	30061	75.2	(95.1) [a]	Pass
177	5.0 - 9.0% of mass 176	1931	4.83	(6.42) [b]	Pass

(a) Value is % of mass 174
(b) Value is % of mass 176

This check applies to the following Samples, MS, MSD, Blanks, and Standards:

Lab Sample ID	Lab File ID	Date Analyzed	Time Analyzed	Hours Lapsed	Client Sample ID
VF1348-CC1347	F046023.D	11/23/10	09:55	00:39	Continuing cal 4
VF1348-BS	F046024.D	11/23/10	10:32	01:16	Blank Spike
VF1348-MB	F046025.D	11/23/10	10:57	01:41	Method Blank
F78101-29	F046026.D	11/23/10	11:22	02:06	(used for QC only; not part of job F78009)
ZZZZZZ	F046028.D	11/23/10	12:13	02:57	(unrelated sample)
F78009-38	F046029.D	11/23/10	12:38	03:22	SD27-TB-11112010-C
F78009-39	F046030.D	11/23/10	13:04	03:48	SD27-TB-11112010-D
ZZZZZZ	F046031.D	11/23/10	13:29	04:13	(unrelated sample)
ZZZZZZ	F046032.D	11/23/10	13:55	04:39	(unrelated sample)
ZZZZZZ	F046033.D	11/23/10	14:21	05:05	(unrelated sample)
F78101-29MS	F046034.D	11/23/10	14:46	05:30	Matrix Spike
F78101-29MSD	F046035.D	11/23/10	15:11	05:55	Matrix Spike Duplicate

Instrument Performance Check (BFB)

Job Number: F78009
Account: TETTNOAK Tetra Tech, Inc
Project: Holloman AFB; Alamogordo, NM

Sample: VF1349-BFB
Lab File ID: F046036.D
Instrument ID: GCMSF
Injection Date: 11/23/10
Injection Time: 16:09

m/e	Ion Abundance Criteria	Raw Abundance	% Relative Abundance		Pass/Fail
50	15.0 - 40.0% of mass 95	10751	22.8		Pass
75	30.0 - 60.0% of mass 95	21938	46.4		Pass
95	Base peak, 100% relative abundance	47242	100.0		Pass
96	5.0 - 9.0% of mass 95	3860	8.17		Pass
173	Less than 2.0% of mass 174	218	0.46	(0.60) [a]	Pass
174	50.0 - 100.0% of mass 95	36554	77.4		Pass
175	5.0 - 9.0% of mass 174	2564	5.43	(7.01) [a]	Pass
176	95.0 - 101.0% of mass 174	36616	77.5	(100.2) [a]	Pass
177	5.0 - 9.0% of mass 176	2505	5.30	(6.84) [b]	Pass

(a) Value is % of mass 174
(b) Value is % of mass 176

This check applies to the following Samples, MS, MSD, Blanks, and Standards:

Lab Sample ID	Lab File ID	Date Analyzed	Time Analyzed	Hours Lapsed	Client Sample ID
VF1349-IC1349	F046037.D	11/23/10	16:48	00:39	Initial cal 1
VF1349-IC1349	F046038.D	11/23/10	17:13	01:04	Initial cal 2
VF1349-IC1349	F046039.D	11/23/10	17:38	01:29	Initial cal 3
VF1349-ICC1349	F046040.D	11/23/10	18:03	01:54	Initial cal 4
VF1349-IC1349	F046041.D	11/23/10	18:29	02:20	Initial cal 5
VF1349-IC1349	F046042.D	11/23/10	18:54	02:45	Initial cal 6
VF1349-ICV1349	F046043.D	11/23/10	19:19	03:10	Initial cal verification 4

Instrument Performance Check (BFB)

Job Number: F78009
Account: TETTNOAK Tetra Tech, Inc
Project: Holloman AFB; Alamogordo, NM

Sample: VF1350-BFB
Lab File ID: F046049.D
Instrument ID: GCMSF
Injection Date: 11/24/10
Injection Time: 09:26

m/e	Ion Abundance Criteria	Raw Abundance	% Relative Abundance		Pass/Fail
50	15.0 - 40.0% of mass 95	11892	24.6		Pass
75	30.0 - 60.0% of mass 95	23933	49.5		Pass
95	Base peak, 100% relative abundance	48394	100.0		Pass
96	5.0 - 9.0% of mass 95	3264	6.74		Pass
173	Less than 2.0% of mass 174	93	0.19	(0.24) [a]	Pass
174	50.0 - 100.0% of mass 95	39378	81.4		Pass
175	5.0 - 9.0% of mass 174	3033	6.27	(7.70) [a]	Pass
176	95.0 - 101.0% of mass 174	38864	80.3	(98.7) [a]	Pass
177	5.0 - 9.0% of mass 176	2399	4.96	(6.17) [b]	Pass

(a) Value is % of mass 174
(b) Value is % of mass 176

This check applies to the following Samples, MS, MSD, Blanks, and Standards:

Lab Sample ID	Lab File ID	Date Analyzed	Time Analyzed	Hours Lapsed	Client Sample ID
VF1350-CC1349	F046050.D	11/24/10	09:52	00:26	Continuing cal 4
VF1350-BS	F046051.D	11/24/10	10:21	00:55	Blank Spike
VF1351-BS	F046051.D	11/24/10	10:21	00:55	Blank Spike
F78009-37	F046053.D	11/24/10	11:11	01:45	SD27-TTMW-01
ZZZZZZ	F046054.D	11/24/10	11:36	02:10	(unrelated sample)
VF1350-MB	F046055.D	11/24/10	12:01	02:35	Method Blank
VF1351-MB	F046055.D	11/24/10	12:01	02:35	Method Blank
ZZZZZZ	F046059.D	11/24/10	13:42	04:16	(unrelated sample)
ZZZZZZ	F046060.D	11/24/10	14:08	04:42	(unrelated sample)
ZZZZZZ	F046061.D	11/24/10	14:33	05:07	(unrelated sample)
F78009-37MS	F046062.D	11/24/10	14:58	05:32	Matrix Spike
F78009-37MSD	F046063.D	11/24/10	15:23	05:57	Matrix Spike Duplicate
F78078-5	F046064.D	11/24/10	15:49	06:23	(used for QC only; not part of job F78009)
F78078-5MS	F046065.D	11/24/10	16:14	06:48	Matrix Spike

Instrument Performance Check (BFB)

Job Number: F78009
Account: TETTNOAK Tetra Tech, Inc
Project: Holloman AFB; Alamogordo, NM

Sample: VF1353-BFB
Lab File ID: F046109.D
Instrument ID: GCMSF
Injection Date: 11/30/10
Injection Time: 09:58

m/e	Ion Abundance Criteria	Raw Abundance	% Relative Abundance		Pass/Fail
50	15.0 - 40.0% of mass 95	8354	23.7		Pass
75	30.0 - 60.0% of mass 95	16058	45.6		Pass
95	Base peak, 100% relative abundance	35194	100.0		Pass
96	5.0 - 9.0% of mass 95	2598	7.38		Pass
173	Less than 2.0% of mass 174	144	0.41	(0.48) [a]	Pass
174	50.0 - 100.0% of mass 95	29810	84.7		Pass
175	5.0 - 9.0% of mass 174	1770	5.03	(5.94) [a]	Pass
176	95.0 - 101.0% of mass 174	28832	81.9	(96.7) [a]	Pass
177	5.0 - 9.0% of mass 176	2169	6.16	(7.52) [b]	Pass

(a) Value is % of mass 174
(b) Value is % of mass 176

This check applies to the following Samples, MS, MSD, Blanks, and Standards:

Lab Sample ID	Lab File ID	Date Analyzed	Time Analyzed	Hours Lapsed	Client Sample ID
VF1353-CC1349	F046110.D	11/30/10	10:25	00:27	Continuing cal 4
VF1353-BS	F046111.D	11/30/10	10:57	00:59	Blank Spike
VF1353-MB	F046112.D	11/30/10	11:23	01:25	Method Blank
ZZZZZZ	F046113.D	11/30/10	11:48	01:50	(unrelated sample)
ZZZZZZ	F046115.D	11/30/10	13:15	03:17	(unrelated sample)
ZZZZZZ	F046116.D	11/30/10	13:44	03:46	(unrelated sample)
F78210-7	F046118.D	11/30/10	14:37	04:39	(used for QC only; not part of job F78009)
ZZZZZZ	F046120.D	11/30/10	15:27	05:29	(unrelated sample)
F78210-7MS	F046122.D	11/30/10	16:17	06:19	Matrix Spike
F78210-7MSD	F046123.D	11/30/10	16:43	06:45	Matrix Spike Duplicate
ZZZZZZ	F046124.D	11/30/10	17:08	07:10	(unrelated sample)
ZZZZZZ	F046125.D	11/30/10	17:33	07:35	(unrelated sample)
ZZZZZZ	F046126.D	11/30/10	17:58	08:00	(unrelated sample)
ZZZZZZ	F046127.D	11/30/10	18:24	08:26	(unrelated sample)
ZZZZZZ	F046128.D	11/30/10	18:49	08:51	(unrelated sample)
ZZZZZZ	F046129.D	11/30/10	19:14	09:16	(unrelated sample)
ZZZZZZ	F046130.D	11/30/10	19:40	09:42	(unrelated sample)
ZZZZZZ	F046131.D	11/30/10	20:05	10:07	(unrelated sample)
ZZZZZZ	F046132.D	11/30/10	20:30	10:32	(unrelated sample)
ZZZZZZ	F046133.D	11/30/10	20:55	10:57	(unrelated sample)
F78009-36	F046134.D	11/30/10	21:20	11:22	SD27-TTMW-05

Instrument Performance Check (BFB)

Job Number: F78009
Account: TETTNOAK Tetra Tech, Inc
Project: Holloman AFB; Alamogordo, NM

Sample: VG2573-BFB
Lab File ID: G0068158.D
Instrument ID: GCMSG
Injection Date: 11/09/10
Injection Time: 09:40

m/e	Ion Abundance Criteria	Raw Abundance	% Relative Abundance		Pass/Fail
50	15.0 - 40.0% of mass 95	39822	26.0		Pass
75	30.0 - 60.0% of mass 95	86831	56.8		Pass
95	Base peak, 100% relative abundance	152911	100.0		Pass
96	5.0 - 9.0% of mass 95	10443	6.83		Pass
173	Less than 2.0% of mass 174	0	0.00	(0.00) [a]	Pass
174	50.0 - 100.0% of mass 95	127490	83.4		Pass
175	5.0 - 9.0% of mass 174	9191	6.01	(7.21) [a]	Pass
176	95.0 - 101.0% of mass 174	124881	81.7	(98.0) [a]	Pass
177	5.0 - 9.0% of mass 176	8526	5.58	(6.83) [b]	Pass

(a) Value is % of mass 174
(b) Value is % of mass 176

This check applies to the following Samples, MS, MSD, Blanks, and Standards:

Lab Sample ID	Lab File ID	Date Analyzed	Time Analyzed	Hours Lapsed	Client Sample ID
VG2573-IC2573	G0068159.D	11/09/10	09:57	00:17	Initial cal 1
VG2573-IC2573	G0068160.D	11/09/10	10:33	00:53	Initial cal 2
VG2573-IC2573	G0068161.D	11/09/10	11:06	01:26	Initial cal 3
VG2573-ICC2573	G0068162.D	11/09/10	11:32	01:52	Initial cal 4
VG2573-IC2573	G0068163.D	11/09/10	11:59	02:19	Initial cal 5
VG2573-IC2573	G0068164.D	11/09/10	12:25	02:45	Initial cal 6
VG2573-ICV2573	G0068165.D	11/09/10	12:52	03:12	Initial cal verification 3
VG2573-BS	G0068166.D	11/09/10	13:19	03:39	Blank Spike
VG2573-MB	G0068167.D	11/09/10	13:46	04:06	Method Blank
F77723-5	G0068168.D	11/09/10	14:12	04:32	(used for QC only; not part of job F78009)
F77723-5MS	G0068169.D	11/09/10	14:39	04:59	Matrix Spike
F77723-5MSD	G0068170.D	11/09/10	15:06	05:26	Matrix Spike Duplicate
ZZZZZZ	G0068171.D	11/09/10	15:32	05:52	(unrelated sample)
ZZZZZZ	G0068172.D	11/09/10	15:59	06:19	(unrelated sample)
ZZZZZZ	G0068173.D	11/09/10	16:26	06:46	(unrelated sample)
ZZZZZZ	G0068174.D	11/09/10	16:53	07:13	(unrelated sample)
ZZZZZZ	G0068175.D	11/09/10	17:19	07:39	(unrelated sample)
ZZZZZZ	G0068176.D	11/09/10	17:46	08:06	(unrelated sample)
ZZZZZZ	G0068177.D	11/09/10	18:13	08:33	(unrelated sample)
ZZZZZZ	G0068178.D	11/09/10	18:40	09:00	(unrelated sample)
ZZZZZZ	G0068179.D	11/09/10	19:07	09:27	(unrelated sample)
ZZZZZZ	G0068180.D	11/09/10	19:33	09:53	(unrelated sample)
ZZZZZZ	G0068181.D	11/09/10	20:00	10:20	(unrelated sample)
ZZZZZZ	G0068182.D	11/09/10	20:27	10:47	(unrelated sample)

Instrument Performance Check (BFB)

Job Number: F78009
Account: TETTNOAK Tetra Tech, Inc
Project: Holloman AFB; Alamogordo, NM

Sample: VG2573-BFB
Lab File ID: G0068158.D
Instrument ID: GCMSG
Injection Date: 11/09/10
Injection Time: 09:40

Lab Sample ID	Lab File ID	Date Analyzed	Time Analyzed	Hours Lapsed	Client Sample ID
ZZZZZZ	G0068183.D	11/09/10	20:53	11:13	(unrelated sample)
ZZZZZZ	G0068184.D	11/09/10	21:20	11:40	(unrelated sample)
ZZZZZZ	G0068185.D	11/09/10	21:47	12:07	(unrelated sample)

Instrument Performance Check (BFB)

Job Number: F78009
Account: TETTNOAK Tetra Tech, Inc
Project: Holloman AFB; Alamogordo, NM

Sample: VG2581-BFB
Lab File ID: G0068547.D
Instrument ID: GCMSG
Injection Date: 11/18/10
Injection Time: 09:26

m/e	Ion Abundance Criteria	Raw Abundance	% Relative Abundance		Pass/Fail
50	15.0 - 40.0% of mass 95	29474	26.6		Pass
75	30.0 - 60.0% of mass 95	66411	59.9		Pass
95	Base peak, 100% relative abundance	110827	100.0		Pass
96	5.0 - 9.0% of mass 95	7868	7.10		Pass
173	Less than 2.0% of mass 174	0	0.00	(0.00) [a]	Pass
174	50.0 - 100.0% of mass 95	92501	83.5		Pass
175	5.0 - 9.0% of mass 174	6173	5.57	(6.67) [a]	Pass
176	95.0 - 101.0% of mass 174	92153	83.2	(99.6) [a]	Pass
177	5.0 - 9.0% of mass 176	5963	5.38	(6.47) [b]	Pass

(a) Value is % of mass 174
(b) Value is % of mass 176

This check applies to the following Samples, MS, MSD, Blanks, and Standards:

Lab Sample ID	Lab File ID	Date Analyzed	Time Analyzed	Hours Lapsed	Client Sample ID
VG2581-CC2573	G0068548.D	11/18/10	09:43	00:17	Continuing cal 4
VG2581-BS	G0068549.D	11/18/10	10:40	01:14	Blank Spike
ZZZZZZ	G0068551.D	11/18/10	11:33	02:07	(unrelated sample)
ZZZZZZ	G0068552.D	11/18/10	11:59	02:33	(unrelated sample)
ZZZZZZ	G0068553.D	11/18/10	12:26	03:00	(unrelated sample)
ZZZZZZ	G0068554.D	11/18/10	12:53	03:27	(unrelated sample)
F78038-3	G0068555.D	11/18/10	13:19	03:53	(used for QC only; not part of job F78009)
F78038-3MS	G0068556.D	11/18/10	13:46	04:20	Matrix Spike
F78038-3MSD	G0068557.D	11/18/10	14:13	04:47	Matrix Spike Duplicate
VG2581-MB	G0068558.D	11/18/10	14:39	05:13	Method Blank
ZZZZZZ	G0068559.D	11/18/10	15:06	05:40	(unrelated sample)
ZZZZZZ	G0068560.D	11/18/10	15:33	06:07	(unrelated sample)
ZZZZZZ	G0068561.D	11/18/10	15:59	06:33	(unrelated sample)
ZZZZZZ	G0068562.D	11/18/10	16:26	07:00	(unrelated sample)
ZZZZZZ	G0068563.D	11/18/10	16:53	07:27	(unrelated sample)
ZZZZZZ	G0068564.D	11/18/10	17:19	07:53	(unrelated sample)
ZZZZZZ	G0068565.D	11/18/10	17:46	08:20	(unrelated sample)
ZZZZZZ	G0068566.D	11/18/10	18:13	08:47	(unrelated sample)
F78009-1	G0068567.D	11/18/10	18:40	09:14	SS39-DPT-05A
F78009-2	G0068568.D	11/18/10	19:06	09:40	SS39-DPT-05B
F78009-3	G0068569.D	11/18/10	19:33	10:07	SS39-DPT-05C
F78009-4	G0068570.D	11/18/10	19:59	10:33	SS39-DPT-06A
ZZZZZZ	G0068571.D	11/18/10	20:26	11:00	(unrelated sample)
ZZZZZZ	G0068572.D	11/18/10	20:53	11:27	(unrelated sample)

Instrument Performance Check (BFB)

Job Number: F78009
Account: TETTNOAK Tetra Tech, Inc
Project: Holloman AFB; Alamogordo, NM

Sample:	VG2581-BFB	**Injection Date:**	11/18/10
Lab File ID:	G0068547.D	**Injection Time:**	09:26
Instrument ID:	GCMSG		

Lab Sample ID	Lab File ID	Date Analyzed	Time Analyzed	Hours Lapsed	Client Sample ID
ZZZZZZ	G0068573.D	11/18/10	21:19	11:53	(unrelated sample)

Instrument Performance Check (BFB)

Job Number: F78009
Account: TETTNOAK Tetra Tech, Inc
Project: Holloman AFB; Alamogordo, NM

Sample: VG2582-BFB
Lab File ID: G0068585.D
Instrument ID: GCMSG
Injection Date: 11/19/10
Injection Time: 09:15

m/e	Ion Abundance Criteria	Raw Abundance	% Relative Abundance		Pass/Fail
50	15.0 - 40.0% of mass 95	31065	27.6		Pass
75	30.0 - 60.0% of mass 95	67449	59.9		Pass
95	Base peak, 100% relative abundance	112525	100.0		Pass
96	5.0 - 9.0% of mass 95	7949	7.06		Pass
173	Less than 2.0% of mass 174	0	0.00	(0.00) [a]	Pass
174	50.0 - 100.0% of mass 95	97224	86.4		Pass
175	5.0 - 9.0% of mass 174	8041	7.15	(8.27) [a]	Pass
176	95.0 - 101.0% of mass 174	94447	83.9	(97.1) [a]	Pass
177	5.0 - 9.0% of mass 176	6021	5.35	(6.38) [b]	Pass

(a) Value is % of mass 174
(b) Value is % of mass 176

This check applies to the following Samples, MS, MSD, Blanks, and Standards:

Lab Sample ID	Lab File ID	Date Analyzed	Time Analyzed	Hours Lapsed	Client Sample ID
VG2582-CC2573	G0068586.D	11/19/10	09:33	00:18	Continuing cal 4
VG2582-MB	G0068588.D	11/19/10	10:52	01:37	Method Blank
ZZZZZZ	G0068589.D	11/19/10	11:19	02:04	(unrelated sample)
ZZZZZZ	G0068590.D	11/19/10	11:47	02:32	(unrelated sample)
VG2582-BS	G0068591.D	11/19/10	12:13	02:58	Blank Spike
ZZZZZZ	G0068592.D	11/19/10	12:39	03:24	(unrelated sample)
ZZZZZZ	G0068593.D	11/19/10	13:06	03:51	(unrelated sample)
ZZZZZZ	G0068594.D	11/19/10	13:33	04:18	(unrelated sample)
F78104-1	G0068595.D	11/19/10	14:00	04:45	(used for QC only; not part of job F78009)
F78104-1MS	G0068596.D	11/19/10	14:27	05:12	Matrix Spike
F78104-1MSD	G0068597.D	11/19/10	14:53	05:38	Matrix Spike Duplicate
ZZZZZZ	G0068599.D	11/19/10	15:47	06:32	(unrelated sample)
ZZZZZZ	G0068600.D	11/19/10	16:14	06:59	(unrelated sample)
ZZZZZZ	G0068601.D	11/19/10	16:40	07:25	(unrelated sample)
F78009-33	G0068602.D	11/19/10	17:07	07:52	SS39-DPT-DUP03
F78009-34	G0068603.D	11/19/10	17:34	08:19	SS39-TB-11112010-A
F78009-35	G0068604.D	11/19/10	18:00	08:45	SS39-TB-11112010-B
ZZZZZZ	G0068606.D	11/19/10	18:54	09:39	(unrelated sample)
ZZZZZZ	G0068607.D	11/19/10	19:20	10:05	(unrelated sample)
ZZZZZZ	G0068608.D	11/19/10	19:47	10:32	(unrelated sample)
ZZZZZZ	G0068609.D	11/19/10	20:14	10:59	(unrelated sample)
ZZZZZZ	G0068610.D	11/19/10	20:40	11:25	(unrelated sample)
ZZZZZZ	G0068611.D	11/19/10	21:07	11:52	(unrelated sample)

Instrument Performance Check (BFB)

Job Number: F78009
Account: TETTNOAK Tetra Tech, Inc
Project: Holloman AFB; Alamogordo, NM

Sample: VH2460-BFB
Lab File ID: H066000.D
Instrument ID: GCMSH
Injection Date: 11/15/10
Injection Time: 11:21

m/e	Ion Abundance Criteria	Raw Abundance	% Relative Abundance		Pass/Fail
50	15.0 - 40.0% of mass 95	12095	22.5		Pass
75	30.0 - 60.0% of mass 95	26383	49.1		Pass
95	Base peak, 100% relative abundance	53739	100.0		Pass
96	5.0 - 9.0% of mass 95	3439	6.40		Pass
173	Less than 2.0% of mass 174	0	0.00	(0.00) [a]	Pass
174	50.0 - 100.0% of mass 95	37014	68.9		Pass
175	5.0 - 9.0% of mass 174	2552	4.75	(6.89) [a]	Pass
176	95.0 - 101.0% of mass 174	36051	67.1	(97.4) [a]	Pass
177	5.0 - 9.0% of mass 176	2336	4.35	(6.48) [b]	Pass

(a) Value is % of mass 174
(b) Value is % of mass 176

This check applies to the following Samples, MS, MSD, Blanks, and Standards:

Lab Sample ID	Lab File ID	Date Analyzed	Time Analyzed	Hours Lapsed	Client Sample ID
VH2460-IC2460	H066001.D	11/15/10	11:39	00:18	Initial cal 1
VH2460-IC2460	H066002.D	11/15/10	12:05	00:44	Initial cal 2
VH2460-IC2460	H066003.D	11/15/10	12:32	01:11	Initial cal 3
VH2460-ICC2460	H066004.D	11/15/10	12:58	01:37	Initial cal 4
VH2460-IC2460	H066005.D	11/15/10	13:25	02:04	Initial cal 5
VH2460-IC2460	H066006.D	11/15/10	13:52	02:31	Initial cal 6
VH2460-ICV2460	H066007.D	11/15/10	14:19	02:58	Initial cal verification 3
VH2460-BS	H066008.D	11/15/10	14:45	03:24	Blank Spike
VH2460-MB	H066009.D	11/15/10	15:12	03:51	Method Blank
F77991-3	H066010.D	11/15/10	15:39	04:18	(used for QC only; not part of job F78009)
F77991-3MS	H066011.D	11/15/10	16:06	04:45	Matrix Spike
F77991-3MSD	H066012.D	11/15/10	16:33	05:12	Matrix Spike Duplicate
ZZZZZZ	H066017.D	11/15/10	18:46	07:25	(unrelated sample)
ZZZZZZ	H066018.D	11/15/10	19:13	07:52	(unrelated sample)
ZZZZZZ	H066019.D	11/15/10	19:40	08:19	(unrelated sample)
ZZZZZZ	H066022.D	11/15/10	21:00	09:39	(unrelated sample)
ZZZZZZ	H066023.D	11/15/10	21:26	10:05	(unrelated sample)
ZZZZZZ	H066024.D	11/15/10	21:53	10:32	(unrelated sample)
ZZZZZZ	H066025.D	11/15/10	22:20	10:59	(unrelated sample)

Instrument Performance Check (BFB)

Job Number: F78009
Account: TETTNOAK Tetra Tech, Inc
Project: Holloman AFB; Alamogordo, NM

Sample: VH2463-BFB
Lab File ID: H066135.D
Instrument ID: GCMSH
Injection Date: 11/18/10
Injection Time: 09:26

m/e	Ion Abundance Criteria	Raw Abundance	% Relative Abundance		Pass/Fail
50	15.0 - 40.0% of mass 95	15387	22.8		Pass
75	30.0 - 60.0% of mass 95	32780	48.5		Pass
95	Base peak, 100% relative abundance	67566	100.0		Pass
96	5.0 - 9.0% of mass 95	4691	6.94		Pass
173	Less than 2.0% of mass 174	89	0.13	(0.18) [a]	Pass
174	50.0 - 100.0% of mass 95	49392	73.1		Pass
175	5.0 - 9.0% of mass 174	3418	5.06	(6.92) [a]	Pass
176	95.0 - 101.0% of mass 174	48151	71.3	(97.5) [a]	Pass
177	5.0 - 9.0% of mass 176	3091	4.57	(6.42) [b]	Pass

(a) Value is % of mass 174
(b) Value is % of mass 176

This check applies to the following Samples, MS, MSD, Blanks, and Standards:

Lab Sample ID	Lab File ID	Date Analyzed	Time Analyzed	Hours Lapsed	Client Sample ID
VH2463-CC2460	H066136.D	11/18/10	09:43	00:17	Continuing cal 4
VH2463-BS	H066137.D	11/18/10	10:38	01:12	Blank Spike
VH2463-MB	H066138.D	11/18/10	11:05	01:39	Method Blank
ZZZZZZ	H066139.D	11/18/10	11:31	02:05	(unrelated sample)
ZZZZZZ	H066140.D	11/18/10	11:58	02:32	(unrelated sample)
ZZZZZZ	H066141.D	11/18/10	12:25	02:59	(unrelated sample)
ZZZZZZ	H066142.D	11/18/10	12:51	03:25	(unrelated sample)
F78052-5	H066143.D	11/18/10	13:18	03:52	(used for QC only; not part of job F78009)
F78052-5MS	H066144.D	11/18/10	13:45	04:19	Matrix Spike
F78052-5MSD	H066145.D	11/18/10	14:12	04:46	Matrix Spike Duplicate
ZZZZZZ	H066146.D	11/18/10	14:38	05:12	(unrelated sample)
ZZZZZZ	H066147.D	11/18/10	15:05	05:39	(unrelated sample)
ZZZZZZ	H066149.D	11/18/10	15:58	06:32	(unrelated sample)
ZZZZZZ	H066150.D	11/18/10	16:25	06:59	(unrelated sample)
ZZZZZZ	H066151.D	11/18/10	16:51	07:25	(unrelated sample)
ZZZZZZ	H066152.D	11/18/10	17:18	07:52	(unrelated sample)
F78009-5	H066153.D	11/18/10	17:45	08:19	SS39-DPT-06B
F78009-6	H066154.D	11/18/10	18:12	08:46	SS39-DPT-06C
F78009-7	H066155.D	11/18/10	18:38	09:12	SS39-DPT-07A
F78009-8	H066156.D	11/18/10	19:05	09:39	SS39-DPT-07B
F78009-9	H066157.D	11/18/10	19:32	10:06	SS39-DPT-07C
F78009-10	H066158.D	11/18/10	19:58	10:32	SS39-DPT-08A
F78009-11	H066159.D	11/18/10	20:25	10:59	SS39-DPT-08B
F78009-12	H066160.D	11/18/10	20:51	11:25	SS39-DPT-08C

Instrument Performance Check (BFB)

Job Number: F78009
Account: TETTNOAK Tetra Tech, Inc
Project: Holloman AFB; Alamogordo, NM

Sample: VH2464-BFB
Lab File ID: H066170.D
Instrument ID: GCMSH
Injection Date: 11/19/10
Injection Time: 09:14

m/e	Ion Abundance Criteria	Raw Abundance	% Relative Abundance		Pass/Fail
50	15.0 - 40.0% of mass 95	11641	22.3		Pass
75	30.0 - 60.0% of mass 95	25668	49.1		Pass
95	Base peak, 100% relative abundance	52228	100.0		Pass
96	5.0 - 9.0% of mass 95	3582	6.86		Pass
173	Less than 2.0% of mass 174	42	0.08	(0.10) [a]	Pass
174	50.0 - 100.0% of mass 95	40061	76.7		Pass
175	5.0 - 9.0% of mass 174	2642	5.06	(6.59) [a]	Pass
176	95.0 - 101.0% of mass 174	38540	73.8	(96.2) [a]	Pass
177	5.0 - 9.0% of mass 176	2558	4.90	(6.64) [b]	Pass

(a) Value is % of mass 174
(b) Value is % of mass 176

This check applies to the following Samples, MS, MSD, Blanks, and Standards:

Lab Sample ID	Lab File ID	Date Analyzed	Time Analyzed	Hours Lapsed	Client Sample ID
VH2464-CC2460	H066171.D	11/19/10	09:32	00:18	Continuing cal 4
VH2464-BS	H066172.D	11/19/10	10:25	01:11	Blank Spike
VH2464-MB	H066173.D	11/19/10	10:52	01:38	Method Blank
F78009-24	H066174.D	11/19/10	11:18	02:04	SS39-DPT-12C
F78009-24MS	H066175.D	11/19/10	11:45	02:31	Matrix Spike
F78009-24MSD	H066176.D	11/19/10	12:12	02:58	Matrix Spike Duplicate
F78009-13	H066177.D	11/19/10	12:39	03:25	SS39-DPT-09A
F78009-14	H066178.D	11/19/10	13:05	03:51	SS39-DPT-09B
F78009-15	H066179.D	11/19/10	13:32	04:18	SS39-DPT-09C
F78009-16	H066180.D	11/19/10	13:59	04:45	SS39-DPT-10A
F78009-17	H066181.D	11/19/10	14:25	05:11	SS39-DPT-10B
F78009-21	H066185.D	11/19/10	16:12	06:58	SS39-DPT-11C
F78009-25	H066188.D	11/19/10	17:32	08:18	SS39-DPT-13A
F78009-26	H066189.D	11/19/10	17:58	08:44	SS39-DPT-13B
F78009-27	H066190.D	11/19/10	18:25	09:11	SS39-DPT-13C
F78009-28	H066191.D	11/19/10	18:52	09:38	SS39-DPT-14A
F78009-29	H066192.D	11/19/10	19:18	10:04	SS39-DPT-14B
F78009-30	H066193.D	11/19/10	19:45	10:31	SS39-DPT-14C
F78009-31	H066194.D	11/19/10	20:12	10:58	SS39-DPT-DUP01
F78009-32	H066195.D	11/19/10	20:39	11:25	SS39-DPT-DUP02

Instrument Performance Check (BFB)

Job Number: F78009
Account: TETTNOAK Tetra Tech, Inc
Project: Holloman AFB; Alamogordo, NM

Sample: VH2465-BFB
Lab File ID: H066214.D
Instrument ID: GCMSH
Injection Date: 11/20/10
Injection Time: 06:26

m/e	Ion Abundance Criteria	Raw Abundance	% Relative Abundance		Pass/Fail
50	15.0 - 40.0% of mass 95	12229	22.8		Pass
75	30.0 - 60.0% of mass 95	25594	47.8		Pass
95	Base peak, 100% relative abundance	53564	100.0		Pass
96	5.0 - 9.0% of mass 95	3723	6.95		Pass
173	Less than 2.0% of mass 174	0	0.00	(0.00) [a]	Pass
174	50.0 - 100.0% of mass 95	38588	72.0		Pass
175	5.0 - 9.0% of mass 174	2731	5.10	(7.08) [a]	Pass
176	95.0 - 101.0% of mass 174	37856	70.7	(98.1) [a]	Pass
177	5.0 - 9.0% of mass 176	2527	4.72	(6.68) [b]	Pass

(a) Value is % of mass 174
(b) Value is % of mass 176

This check applies to the following Samples, MS, MSD, Blanks, and Standards:

Lab Sample ID	Lab File ID	Date Analyzed	Time Analyzed	Hours Lapsed	Client Sample ID
VH2465-CC2460	H066215.D	11/20/10	06:44	00:18	Continuing cal 4
VH2465-BS	H066216.D	11/20/10	07:39	01:13	Blank Spike
VH2465-MB	H066217.D	11/20/10	08:06	01:40	Method Blank
F78145-1	H066218.D	11/20/10	08:32	02:06	(used for QC only; not part of job F78009)
F78145-1MS	H066219.D	11/20/10	08:59	02:33	Matrix Spike
F78145-1MSD	H066220.D	11/20/10	09:26	03:00	Matrix Spike Duplicate
ZZZZZZ	H066221.D	11/20/10	09:52	03:26	(unrelated sample)
F78009-18	H066223.D	11/20/10	10:46	04:20	SS39-DPT-10C
F78009-19	H066224.D	11/20/10	11:12	04:46	SS39-DPT-11A
F78009-20	H066225.D	11/20/10	11:39	05:13	SS39-DPT-11B
F78009-22	H066227.D	11/20/10	12:32	06:06	SS39-DPT-12A
F78009-23	H066228.D	11/20/10	12:59	06:33	SS39-DPT-12B
F78009-24	H066229.D	11/20/10	13:26	07:00	SS39-DPT-12C
F78009-26	H066230.D	11/20/10	13:52	07:26	SS39-DPT-13B
F78009-28	H066231.D	11/20/10	14:19	07:53	SS39-DPT-14A
F78009-29	H066232.D	11/20/10	14:46	08:20	SS39-DPT-14B
F78009-30	H066233.D	11/20/10	15:12	08:46	SS39-DPT-14C
F78009-31	H066234.D	11/20/10	15:39	09:13	SS39-DPT-DUP01
F78009-32	H066235.D	11/20/10	16:06	09:40	SS39-DPT-DUP02
ZZZZZZ	H066238.D	11/20/10	17:26	11:00	(unrelated sample)
ZZZZZZ	H066239.D	11/20/10	17:52	11:26	(unrelated sample)

Volatile Internal Standard Area Summary

Job Number: F78009
Account: TETTNOAK Tetra Tech, Inc
Project: Holloman AFB; Alamogordo, NM

Check Std:	VF1348-CC1347	**Injection Date:**	11/23/10
Lab File ID:	F046023.D	**Injection Time:**	09:55
Instrument ID:	GCMSF	**Method:**	SW846 8260B

	IS 1 AREA	RT	IS 2 AREA	RT	IS 3 AREA	RT	IS 4 AREA	RT
Initial Cal [a]	516749	10.31	448628	13.70	262080	16.20	62200	7.53
Check Std [b]	437057	10.31	377487	13.70	227171	16.21	46923	7.52
Upper Limit [c]	874114	10.81	754974	14.20	454342	16.71	93846	8.02
Lower Limit [d]	218529	9.81	188744	13.20	113586	15.71	23462	7.02

Lab Sample ID	IS 1 AREA	RT	IS 2 AREA	RT	IS 3 AREA	RT	IS 4 AREA	RT
VF1348-BS	447083	10.31	372885	13.71	222098	16.21	50949	7.52
VF1348-MB	419969	10.30	349350	13.70	196495	16.20	49157	7.52
F78101-29	408515	10.30	340112	13.70	188493	16.20	46328	7.52
ZZZZZZ	389451	10.30	320445	13.70	180253	16.20	43244	7.52
F78009-38 [e]	374094	10.30	313979	13.70	175282	16.20	42167	7.53
F78009-39 [e]	372826	10.30	310954	13.70	171476	16.20	44356	7.52
ZZZZZZ	366777	10.31	305239	13.70	173917	16.20	44068	7.53
ZZZZZZ	295591	10.31	248831	13.70	105905*	16.21	176258*	7.52
ZZZZZZ	357053	10.31	306001	13.70	169786	16.20	38661	7.52
F78101-29MS	381168	10.30	333197	13.70	198814	16.20	36327	7.52
F78101-29MSD	401979	10.31	338557	13.70	196710	16.20	46975	7.52

IS 1 = Fluorobenzene
IS 2 = Chlorobenzene-D5
IS 3 = 1,4-Dichlorobenzene-d4
IS 4 = Tert Butyl Alcohol-D10

(a) Initial Cal is: VF1347-ICC1347 F045996.D 11/22/10 14:28
(b) Check Std Limit = -50 to + 100% of initial cal area.
(c) Upper Limit = + 100% of check standard area; Retention time + 0.5 minutes.
(d) Lower Limit = -50% of check standard area; Retention time -0.5 minutes.
(e) No sample available for reanalysis.

Volatile Internal Standard Area Summary

Job Number: F78009
Account: TETTNOAK Tetra Tech, Inc
Project: Holloman AFB; Alamogordo, NM

Check Std:	VF1350-CC1349	**Injection Date:**	11/24/10
Lab File ID:	F046050.D	**Injection Time:**	09:52
Instrument ID:	GCMSF	**Method:**	SW846 8260B

	IS 1 AREA	RT	IS 2 AREA	RT	IS 3 AREA	RT	IS 4 AREA	RT
Initial Cal [a]	419667	10.30	370575	13.70	217364	16.20	49941	7.51
Check Std [b]	488797	10.31	418919	13.70	249619	16.20	53259	7.53
Upper Limit [c]	977594	10.81	837838	14.20	499238	16.70	106518	8.03
Lower Limit [d]	244399	9.81	209460	13.20	124810	15.70	26630	7.03

Lab Sample ID	IS 1 AREA	RT	IS 2 AREA	RT	IS 3 AREA	RT	IS 4 AREA	RT
VF1350-BS	482820	10.31	413816	13.70	241409	16.20	54693	7.52
VF1351-BS	482820	10.31	413816	13.70	241409	16.20	54693	7.52
F78009-37	432714	10.30	362322	13.70	202409	16.20	65614	7.53
ZZZZZZ	417582	10.30	348693	13.70	189804	16.20	47418	7.51
VF1350-MB	381995	10.30	332499	13.70	183347	16.20	42734	7.52
VF1351-MB	381995	10.30	332499	13.70	183347	16.20	42734	7.52
ZZZZZZ	381268	10.30	338660	13.70	185681	16.20	43845	7.52
ZZZZZZ	371907	10.30	312266	13.70	174811	16.20	44045	7.52
ZZZZZZ	350155	10.31	306208	13.70	170211	16.20	41917	7.53
F78009-37MS	395099	10.30	342335	13.70	195946	16.20	58774	7.52
F78009-37MSD	389931	10.30	340774	13.70	190716	16.21	64114	7.52
F78078-5	372763	10.31	316236	13.70	176271	16.20	45820	7.53
F78078-5MS [e]	384826	10.30	331801	13.70	194526	16.20	45142	7.52

IS 1 = Fluorobenzene
IS 2 = Chlorobenzene-D5
IS 3 = 1,4-Dichlorobenzene-d4
IS 4 = Tert Butyl Alcohol-D10

(a) Initial Cal is: VF1349-ICC1349 F046040.D 11/23/10 18:03
(b) Check Std Limit = -50 to + 100% of initial cal area.
(c) Upper Limit = + 100% of check standard area; Retention time + 0.5 minutes.
(d) Lower Limit = -50% of check standard area; Retention time -0.5 minutes.
(e) No MSD available for this run.

Volatile Internal Standard Area Summary

Job Number: F78009
Account: TETTNOAK Tetra Tech, Inc
Project: Holloman AFB; Alamogordo, NM

Check Std:	VF1353-CC1349	**Injection Date:**	11/30/10
Lab File ID:	F046110.D	**Injection Time:**	10:25
Instrument ID:	GCMSF	**Method:**	SW846 8260B

	IS 1 AREA	RT	IS 2 AREA	RT	IS 3 AREA	RT	IS 4 AREA	RT
Initial Cal [a]	419667	10.30	370575	13.70	217364	16.20	49941	7.51
Check Std [b]	423655	10.31	375432	13.71	223828	16.20	51208	7.53
Upper Limit [c]	847310	10.81	750864	14.21	447656	16.70	102416	8.03
Lower Limit [d]	211828	9.81	187716	13.21	111914	15.70	25604	7.03

Lab Sample ID	IS 1 AREA	RT	IS 2 AREA	RT	IS 3 AREA	RT	IS 4 AREA	RT
VF1353-BS	411438	10.31	360128	13.70	213687	16.21	48854	7.52
VF1353-MB	378867	10.31	333522	13.70	192010	16.20	49327	7.53
ZZZZZZ	377592	10.30	359082	13.70	214122	16.20	46625	7.52
ZZZZZZ	402825	10.31	346758	13.71	222308	16.21	49781	7.53
ZZZZZZ	437152	10.30	376636	13.70	209311	16.20	58867	7.52
F78210-7	380100	10.31	322250	13.70	184932	16.20	48324	7.53
ZZZZZZ	355799	10.30	310711	13.70	180052	16.20	42840	7.53
F78210-7MS	345343	10.30	322065	13.70	196086	16.20	44695	7.52
F78210-7MSD	367333	10.31	330742	13.70	198176	16.20	47516	7.52
ZZZZZZ	339871	10.31	303887	13.70	167325	16.20	41925	7.53
ZZZZZZ	328761	10.31	290634	13.70	161855	16.20	37504	7.52
ZZZZZZ	316259	10.31	271653	13.70	157691	16.20	37810	7.53
ZZZZZZ	319897	10.30	287756	13.70	156866	16.20	36016	7.52
ZZZZZZ	303452	10.30	272885	13.70	150357	16.20	35227	7.52
ZZZZZZ	306798	10.30	268530	13.70	148661	16.20	34110	7.53
ZZZZZZ	290760	10.30	262621	13.70	145724	16.20	31350	7.52
ZZZZZZ	300250	10.30	271564	13.70	151144	16.20	34256	7.52
ZZZZZZ	289960	10.30	259699	13.70	144744	16.21	33177	7.52
ZZZZZZ	280904	10.30	254144	13.70	144226	16.21	33934	7.52
F78009-36 [e]	293658	10.30	275963	13.70	165782	16.20	33054	7.51

IS 1 = Fluorobenzene
IS 2 = Chlorobenzene-D5
IS 3 = 1,4-Dichlorobenzene-d4
IS 4 = Tert Butyl Alcohol-D10

(a) Initial Cal is: VF1349-ICC1349 F046040.D 11/23/10 18:03
(b) Check Std Limit = -50 to + 100% of initial cal area.
(c) Upper Limit = + 100% of check standard area; Retention time + 0.5 minutes.
(d) Lower Limit = -50% of check standard area; Retention time -0.5 minutes.
(e) Sample analyzed beyond hold time; reported results are considered minimum values.

Volatile Internal Standard Area Summary

Job Number: F78009
Account: TETTNOAK Tetra Tech, Inc
Project: Holloman AFB; Alamogordo, NM

Check Std:	VG2581-CC2573	**Injection Date:**	11/18/10
Lab File ID:	G0068548.D	**Injection Time:**	09:43
Instrument ID:	GCMSG	**Method:**	SW846 8260B

	IS 1 AREA	RT	IS 2 AREA	RT	IS 3 AREA	RT	IS 4 AREA	RT
Initial Cal [a]	871781	11.08	651780	14.64	351601	16.92	106812	7.98
Check Std [b]	641136	11.07	505984	14.65	268019	16.93	85186	7.97
Upper Limit [c]	1282272	11.57	1011968	15.15	536038	17.43	170372	8.47
Lower Limit [d]	320568	10.57	252992	14.15	134010	16.43	42593	7.47

Lab Sample ID	IS 1 AREA	RT	IS 2 AREA	RT	IS 3 AREA	RT	IS 4 AREA	RT
VG2581-BS	639359	11.06	513839	14.64	265129	16.91	74656	7.97
ZZZZZZ	584684	11.07	446105	14.63	199305	16.92	75367	7.99
ZZZZZZ	624125	11.06	484506	14.63	215415	16.92	72042	7.99
ZZZZZZ	608136	11.06	479214	14.63	209527	16.92	70243	7.98
ZZZZZZ	614015	11.07	469476	14.64	228215	16.91	73351	7.98
F78038-3	529318	11.07	404553	14.64	200750	16.92	61223	8.00
F78038-3MS	600848	11.07	480752	14.63	237065	16.92	50521	7.98
F78038-3MSD	563879	11.07	449942	14.63	227337	16.92	50455	7.97
VG2581-MB	566028	11.07	418021	14.63	180346	16.92	73035	7.99
ZZZZZZ	543392	11.07	398424	14.63	177435	16.92	26419*	7.99
ZZZZZZ	579872	11.07	447219	14.64	201715	16.92	81815	7.99
ZZZZZZ	550842	11.07	429136	14.63	161960	16.92	85233	7.99
ZZZZZZ	550372	11.07	400715	14.63	153991	16.92	73287	7.99
ZZZZZZ	548653	11.07	405702	14.63	168894	16.91	70299	7.99
ZZZZZZ	476218	11.07	306282	14.64	68955*	16.91	81881	7.98
ZZZZZZ	521585	11.07	404998	14.63	140103	16.92	72484	7.98
ZZZZZZ	798326	11.07	636697	14.63	296665	16.91	122239	7.99
F78009-1	743899	11.06	610446	14.63	288369	16.91	91624	7.99
F78009-2	749258	11.06	635140	14.63	290871	16.92	74535	7.99
F78009-3	735268	11.06	599505	14.63	274039	16.92	93766	7.97
F78009-4	742256	11.06	578578	14.63	222653	16.91	101347	7.98
ZZZZZZ	379197	11.07	124408*	14.63	16388*	16.93	80521	7.98
ZZZZZZ	353788	11.06	117583*	14.63	18246*	16.92	73100	7.99
ZZZZZZ	719524	11.06	580241	14.63	270084	16.91	88885	7.99

IS 1 = Fluorobenzene
IS 2 = Chlorobenzene-D5
IS 3 = 1,4-Dichlorobenzene-d4
IS 4 = Tert Butyl Alcohol-D10

(a) Initial Cal is: VG2573-ICC2573 G0068162.D 11/09/10 11:32
(b) Check Std Limit = -50 to + 100% of initial cal area.
(c) Upper Limit = + 100% of check standard area; Retention time + 0.5 minutes.

Volatile Internal Standard Area Summary

Job Number: F78009
Account: TETTNOAK Tetra Tech, Inc
Project: Holloman AFB; Alamogordo, NM

Check Std:	VG2581-CC2573	**Injection Date:**	11/18/10
Lab File ID:	G0068548.D	**Injection Time:**	09:43
Instrument ID:	GCMSG	**Method:**	SW846 8260B

Lab	IS 1		IS 2		IS 3		IS 4	
Sample ID	**AREA**	**RT**	**AREA**	**RT**	**AREA**	**RT**	**AREA**	**RT**

(d) Lower Limit = -50% of check standard area; Retention time -0.5 minutes.

Volatile Internal Standard Area Summary

Job Number: F78009
Account: TETTNOAK Tetra Tech, Inc
Project: Holloman AFB; Alamogordo, NM

Check Std:	VG2582-CC2573	**Injection Date:**	11/19/10
Lab File ID:	G0068586.D	**Injection Time:**	09:33
Instrument ID:	GCMSG	**Method:**	SW846 8260B

	IS 1 AREA	RT	IS 2 AREA	RT	IS 3 AREA	RT	IS 4 AREA	RT
Initial Cal [a]	871781	11.08	651780	14.64	351601	16.92	106812	7.98
Check Std [b]	614873	11.06	494210	14.62	268603	16.91	85117	7.97
Upper Limit [c]	1229746	11.56	988420	15.12	537206	17.41	170234	8.47
Lower Limit [d]	307437	10.56	247105	14.12	134302	16.41	42559	7.47

Lab Sample ID	IS 1 AREA	RT	IS 2 AREA	RT	IS 3 AREA	RT	IS 4 AREA	RT
VG2582-MB	598586	11.06	429361	14.63	188300	16.91	60915	7.98
ZZZZZZ	321602	11.06	99295*	14.63	14044*	16.93	41953*	7.98
ZZZZZZ	313943	11.06	102226*	14.63	12785*	16.93	48854	7.98
VG2582-BS	590849	11.06	488364	14.62	251030	16.91	59780	7.97
ZZZZZZ	597025	11.06	509842	14.63	265091	16.91	79751	7.97
ZZZZZZ	644276	11.06	525907	14.64	272075	16.91	82329	8.02
ZZZZZZ	582465	11.06	399852	14.63	115829*	16.92	82465	7.97
F78104-1	783089	11.06	573946	14.63	227149	16.92	91959	7.99
F78104-1MS	764073	11.06	599171	14.63	302548	16.91	62245	7.97
F78104-1MSD	811951	11.06	652167	14.63	299419	16.91	48415	7.99
ZZZZZZ	738938	11.07	536985	14.63	224469	16.91	78051	8.00
ZZZZZZ	745900	11.06	548835	14.63	245060	16.91	84210	8.00
ZZZZZZ	737953	11.06	549748	14.64	212652	16.91	52536	7.99
F78009-33	707747	11.06	572370	14.63	264399	16.92	105102	7.98
F78009-34	735059	11.06	585188	14.63	257458	16.91	63806	7.98
F78009-35	714141	11.06	569858	14.63	264733	16.91	65604	8.00
ZZZZZZ	537142	11.06	569403	14.64	239320	16.91	66870	7.98
ZZZZZZ	705374	11.06	555074	14.63	232513	16.91	85536	7.99
ZZZZZZ	544888	11.06	404363	14.62	171787	16.91	61679	7.97
ZZZZZZ	512298	11.06	429779	14.63	204802	16.91	56540	7.98
ZZZZZZ	511640	11.06	430777	14.63	179260	16.91	80235	7.98
ZZZZZZ	497450	11.06	391485	14.63	167432	16.91	67871	7.97

IS 1 = Fluorobenzene
IS 2 = Chlorobenzene-D5
IS 3 = 1,4-Dichlorobenzene-d4
IS 4 = Tert Butyl Alcohol-D10

(a) Initial Cal is: VG2573-ICC2573 G0068162.D 11/09/10 11:32
(b) Check Std Limit = -50 to + 100% of initial cal area.
(c) Upper Limit = + 100% of check standard area; Retention time + 0.5 minutes.
(d) Lower Limit = -50% of check standard area; Retention time -0.5 minutes.

Volatile Internal Standard Area Summary

Job Number: F78009
Account: TETTNOAK Tetra Tech, Inc
Project: Holloman AFB; Alamogordo, NM

Check Std:	VH2463-CC2460	**Injection Date:**	11/18/10
Lab File ID:	H066136.D	**Injection Time:**	09:43
Instrument ID:	GCMSH	**Method:**	SW846 8260B

	IS 1 AREA	RT	IS 2 AREA	RT	IS 3 AREA	RT	IS 4 AREA	RT
Initial Cal [a]	516319	11.24	321853	14.76	196145	17.23	44961	8.04
Check Std [b]	475615	11.23	305427	14.74	182878	17.22	44233	8.02
Upper Limit [c]	951230	11.73	610854	15.24	365756	17.72	88466	8.52
Lower Limit [d]	237808	10.73	152714	14.24	91439	16.72	22117	7.52

Lab Sample ID	IS 1 AREA	RT	IS 2 AREA	RT	IS 3 AREA	RT	IS 4 AREA	RT
VH2463-BS	432100	11.22	307497	14.74	178028	17.21	50083	8.00
VH2463-MB	460493	11.22	347177	14.75	186232	17.22	33072	8.06
ZZZZZZ	453585	11.22	357156	14.75	193579	17.22	34582	8.06
ZZZZZZ	444025	11.23	365499	14.75	203782	17.22	39370	8.05
ZZZZZZ	469792	11.23	389364	14.75	218257	17.22	34739	8.05
ZZZZZZ	467234	11.22	394731	14.75	212191	17.22	37395	8.04
F78052-5	435076	11.23	343987	14.76	204048	17.23	31699	8.03
F78052-5MS	459560	11.22	329719	14.75	192651	17.22	26008	8.03
F78052-5MSD	459692	11.22	323643	14.75	188267	17.22	24608	8.01
ZZZZZZ	461905	11.23	355610	14.75	199997	17.22	38172	8.03
ZZZZZZ	497189	11.23	383491	14.75	217012	17.23	50916	8.04
ZZZZZZ	516326	11.22	388171	14.76	210189	17.23	41587	8.03
ZZZZZZ	500240	11.23	298099	14.76	184021	17.23	48722	8.02
ZZZZZZ	366718	11.23	268170	14.76	145510	17.23	33542	8.05
ZZZZZZ	517547	11.23	399334	14.75	223332	17.22	64671	8.03
F78009-5	519419	11.22	397607	14.75	207483	17.22	58138	8.02
F78009-6	453983	11.22	343509	14.75	183101	17.22	50330	8.07
F78009-7	490884	11.22	382514	14.75	198781	17.22	52439	8.05
F78009-8	483534	11.22	372350	14.75	202093	17.22	43594	8.05
F78009-9	480770	11.22	372225	14.75	200132	17.23	48958	8.03
F78009-10	472962	11.22	380984	14.75	211387	17.22	49939	8.05
F78009-11	441092	11.23	354259	14.75	201587	17.22	48566	8.06
F78009-12	483242	11.23	367593	14.75	208602	17.22	51808	8.07

IS 1 = Fluorobenzene
IS 2 = Chlorobenzene-D5
IS 3 = 1,4-Dichlorobenzene-d4
IS 4 = Tert Butyl Alcohol-D10

(a) Initial Cal is: VH2460-ICC2460 H066004.D 11/15/10 12:58
(b) Check Std Limit = -50 to + 100% of initial cal area.
(c) Upper Limit = + 100% of check standard area; Retention time + 0.5 minutes.
(d) Lower Limit = -50% of check standard area; Retention time -0.5 minutes.

Volatile Internal Standard Area Summary

Job Number: F78009
Account: TETTNOAK Tetra Tech, Inc
Project: Holloman AFB; Alamogordo, NM

Check Std:	VH2464-CC2460	**Injection Date:**	11/19/10
Lab File ID:	H066171.D	**Injection Time:**	09:32
Instrument ID:	GCMSH	**Method:**	SW846 8260B

	IS 1 AREA	RT	IS 2 AREA	RT	IS 3 AREA	RT	IS 4 AREA	RT
Initial Cal [a]	516319	11.24	321853	14.76	196145	17.23	44961	8.04
Check Std [b]	476199	11.22	303197	14.74	183112	17.21	39509	8.01
Upper Limit [c]	952398	11.72	606394	15.24	366224	17.71	79018	8.51
Lower Limit [d]	238100	10.72	151599	14.24	91556	16.71	19755	7.51

Lab Sample ID	IS 1 AREA	RT	IS 2 AREA	RT	IS 3 AREA	RT	IS 4 AREA	RT
VH2464-BS	451265	11.21	324692	14.74	192450	17.21	50423	8.01
VH2464-MB	453403	11.22	365163	14.74	200507	17.22	34256	8.03
F78009-24 [e]	452100	11.23	347261	14.75	192072	17.22	33911	8.02
F78009-24MS	451201	11.23	318407	14.74	183847	17.21	21724	8.00
F78009-24MSD	473497	11.22	333921	14.74	198119	17.21	17121*	8.02
F78009-13	465696	11.23	363005	14.75	199228	17.22	40535	8.03
F78009-14	463707	11.23	371653	14.75	218458	17.22	46908	8.03
F78009-15	494596	11.23	399078	14.75	237336	17.22	40969	8.04
F78009-16	455333	11.23	361062	14.75	220258	17.22	38890	8.05
F78009-17	441980	11.22	362791	14.75	227144	17.22	39902	8.05
F78009-21	405724	11.22	327285	14.75	198924	17.22	27897	8.04
F78009-25	423492	11.23	349917	14.75	225896	17.22	35202	8.05
F78009-26 [e]	408282	11.23	361785	14.75	232777	17.21	40866	8.04
F78009-27	431268	11.22	363201	14.75	237413	17.22	43344	8.04
F78009-28 [e]	430802	11.22	368779	14.75	241748	17.22	41563	8.05
F78009-29 [e]	398763	11.22	337582	14.75	234781	17.21	36015	8.07
F78009-30 [e]	423305	11.22	366459	14.75	241186	17.22	38681	8.07
F78009-31 [e]	409964	11.22	362507	14.75	247603	17.22	38772	8.06
F78009-32 [e]	416441	11.23	367480	14.74	238884	17.21	48946	8.04

IS 1 = Fluorobenzene
IS 2 = Chlorobenzene-D5
IS 3 = 1,4-Dichlorobenzene-d4
IS 4 = Tert Butyl Alcohol-D10

(a) Initial Cal is: VH2460-ICC2460 H066004.D 11/15/10 12:58
(b) Check Std Limit = -50 to + 100% of initial cal area.
(c) Upper Limit = + 100% of check standard area; Retention time + 0.5 minutes.
(d) Lower Limit = -50% of check standard area; Retention time -0.5 minutes.
(e) Confirmation run for surrogate recoveries.

Volatile Internal Standard Area Summary

Job Number: F78009
Account: TETTNOAK Tetra Tech, Inc
Project: Holloman AFB; Alamogordo, NM

Check Std:	VH2465-CC2460	**Injection Date:**	11/20/10
Lab File ID:	H066215.D	**Injection Time:**	06:44
Instrument ID:	GCMSH	**Method:**	SW846 8260B

	IS 1 AREA	RT	IS 2 AREA	RT	IS 3 AREA	RT	IS 4 AREA	RT
Initial Cal [a]	516319	11.24	321853	14.76	196145	17.23	44961	8.04
Check Std [b]	475562	11.21	313571	14.74	185675	17.21	38312	8.01
Upper Limit [c]	951124	11.71	627142	15.24	371350	17.71	76624	8.51
Lower Limit [d]	237781	10.71	156786	14.24	92838	16.71	19156	7.51

Lab Sample ID	IS 1 AREA	RT	IS 2 AREA	RT	IS 3 AREA	RT	IS 4 AREA	RT
VH2465-BS	432552	11.22	312097	14.74	186722	17.21	48313	8.02
VH2465-MB	471035	11.22	367254	14.74	201078	17.21	37248	8.03
F78145-1	465882	11.21	358507	14.74	180820	17.21	32281	8.04
F78145-1MS	517566	11.21	361551	14.74	220318	17.21	29310	7.99
F78145-1MSD	461228	11.22	328436	14.74	182737	17.21	13477*	8.02
ZZZZZZ	467100	11.22	343738	14.74	186087	17.21	33068	8.00
F78009-18	509548	11.22	398135	14.74	238424	17.21	48162	8.03
F78009-19	523912	11.22	420613	14.74	239284	17.22	60626	8.03
F78009-20	493851	11.23	412699	14.74	250328	17.21	54072	8.06
F78009-22	463838	11.22	382974	14.75	226731	17.22	35391	8.05
F78009-23	477237	11.23	381237	14.74	237409	17.21	47441	8.06
F78009-24	421583	11.22	351933	14.75	237946	17.22	54865	8.09
F78009-26	453603	11.22	380630	14.75	241725	17.22	44853	8.08
F78009-28	397753	11.23	338400	14.75	213014	17.22	44098	8.06
F78009-29	446202	11.23	382770	14.75	238065	17.22	36009	8.05
F78009-30	448064	11.23	360097	14.75	239641	17.22	38889	8.08
F78009-31	453839	11.23	382496	14.75	258171	17.22	42282	8.08
F78009-32	439039	11.22	373901	14.75	247628	17.22	49910	8.05
ZZZZZZ	484425	11.21	411875	14.75	260093	17.22	26377	8.07
ZZZZZZ	455934	11.23	365781	14.75	228265	17.22	40798	8.05

IS 1 = Fluorobenzene
IS 2 = Chlorobenzene-D5
IS 3 = 1,4-Dichlorobenzene-d4
IS 4 = Tert Butyl Alcohol-D10

(a) Initial Cal is: VH2460-ICC2460 H066004.D 11/15/10 12:58
(b) Check Std Limit = -50 to + 100% of initial cal area.
(c) Upper Limit = + 100% of check standard area; Retention time + 0.5 minutes.
(d) Lower Limit = -50% of check standard area; Retention time -0.5 minutes.

Volatile Surrogate Recovery Summary

Job Number: F78009
Account: TETTNOAK Tetra Tech, Inc
Project: Holloman AFB; Alamogordo, NM

Method: SW846 8260B **Matrix:** AQ

Samples and QC shown here apply to the above method

Lab Sample ID	Lab File ID	S1	S2	S3	S4
F78009-36	F046134.D	106.0	96.0	94.0	93.0
F78009-37	F046053.D	101.0	96.0	105.0	100.0
F78009-38	F046029.D	106.0	93.0	100.0	91.0
F78009-39	F046030.D	107.0	93.0	101.0	90.0
F78009-37MS	F046062.D	98.0	100.0	99.0	98.0
F78009-37MSD	F046063.D	103.0	100.0	99.0	102.0
F78101-29MS	F046034.D	105.0	92.0	95.0	90.0
F78101-29MSD	F046035.D	102.0	98.0	98.0	95.0
F78210-7MS	F046122.D	107.0	103.0	97.0	95.0
F78210-7MSD	F046123.D	106.0	103.0	98.0	98.0
VF1348-BS	F046024.D	99.0	103.0	99.0	92.0
VF1348-MB	F046025.D	106.0	96.0	100.0	93.0
VF1350-BS	F046051.D	100.0	103.0	103.0	104.0
VF1350-MB	F046055.D	104.0	96.0	101.0	101.0
VF1353-BS	F046111.D	103.0	98.0	100.0	101.0
VF1353-MB	F046112.D	105.0	96.0	102.0	96.0

Surrogate Compounds	Recovery Limits
S1 = Dibromofluoromethane	87-116%
S2 = 1,2-Dichloroethane-D4	76-127%
S3 = Toluene-D8	86-112%
S4 = 4-Bromofluorobenzene	84-120%

Volatile Surrogate Recovery Summary

Job Number: F78009
Account: TETTNOAK Tetra Tech, Inc
Project: Holloman AFB; Alamogordo, NM

Method: SW846 8260B **Matrix:** SO

Samples and QC shown here apply to the above method

Lab Sample ID	Lab File ID	S1	S2	S3	S4
F78009-1	G0068567.D	115.0	92.0	96.0	115.0
F78009-2	G0068568.D	112.0	91.0	95.0	116.0
F78009-3	G0068569.D	116.0	90.0	94.0	118.0
F78009-4	G0068570.D	113.0	93.0	104.0	111.0
F78009-5	H066153.D	98.0	80.0	95.0	102.0
F78009-6	H066154.D	100.0	81.0	93.0	100.0
F78009-7	H066155.D	100.0	80.0	97.0	102.0
F78009-8	H066156.D	102.0	80.0	93.0	99.0
F78009-9	H066157.D	101.0	78.0	95.0	98.0
F78009-10	H066158.D	105.0	78.0	93.0	106.0
F78009-11	H066159.D	112.0	79.0	94.0	110.0
F78009-12	H066160.D	102.0	79.0	98.0	106.0
F78009-13	H066177.D	106.0	81.0	103.0	104.0
F78009-14	H066178.D	113.0	78.0	102.0	116.0
F78009-15	H066179.D	115.0	76.0	98.0	112.0
F78009-16	H066180.D	113.0	80.0	104.0	114.0
F78009-17	H066181.D	118.0	78.0	101.0	122.0
F78009-18	H066223.D	112.0	80.0	93.0	107.0
F78009-19	H066224.D	115.0	76.0	100.0	115.0
F78009-20	H066225.D	118.0	75.0	98.0	119.0
F78009-21	H066185.D	120.0	76.0	108.0	118.0
F78009-22	H066227.D	118.0	75.0	103.0	119.0
F78009-23	H066228.D	117.0	77.0	102.0	117.0
F78009-24	H066229.D	126.0* [a]	77.0	95.0	130.0* [a]
F78009-24	H066174.D	101.0	78.0	103.0	101.0
F78009-25	H066188.D	122.0* [b]	76.0	104.0	122.0
F78009-26	H066230.D	125.0* [c]	76.0	103.0	121.0
F78009-26	H066189.D	126.0* [c]	73.0	103.0	127.0* [a]
F78009-27	H066190.D	123.0* [b]	74.0	107.0	122.0
F78009-28	H066231.D	126.0* [a]	74.0	103.0	128.0* [c]
F78009-28	H066191.D	121.0	72.0	103.0	125.0* [c]
F78009-29	H066232.D	126.0* [c]	76.0	102.0	124.0* [c]
F78009-29	H066192.D	125.0* [c]	75.0	97.0	131.0* [c]
F78009-30	H066233.D	124.0* [c]	78.0	97.0	120.0
F78009-30	H066193.D	126.0* [c]	72.0	100.0	125.0* [a]
F78009-31	H066234.D	131.0* [c]	76.0	101.0	122.0
F78009-31	H066194.D	127.0* [c]	72.0	100.0	129.0* [a]
F78009-32	H066235.D	126.0* [c]	75.0	102.0	132.0* [c]
F78009-32	H066195.D	125.0* [c]	71.0	103.0	130.0* [c]
F78009-33	G0068602.D	113.0	90.0	91.0	117.0

Volatile Surrogate Recovery Summary

Job Number: F78009
Account: TETTNOAK Tetra Tech, Inc
Project: Holloman AFB; Alamogordo, NM

Method: SW846 8260B **Matrix:** SO

Samples and QC shown here apply to the above method

Lab Sample ID	Lab File ID	S1	S2	S3	S4
F78009-34	G0068603.D	106.0	91.0	96.0	111.0
F78009-35	G0068604.D	115.0	95.0	89.0	110.0
F78009-24MS	H066175.D	103.0	89.0	106.0	96.0
F78009-24MSD	H066176.D	104.0	90.0	101.0	96.0
F78038-3MS	G0068556.D	104.0	97.0	99.0	96.0
F78038-3MSD	G0068557.D	103.0	96.0	98.0	102.0
F78052-5MS	H066144.D	104.0	90.0	107.0	101.0
F78052-5MSD	H066145.D	104.0	90.0	103.0	94.0
F78104-1MS	G0068596.D	102.0	97.0	94.0	91.0
F78104-1MSD	G0068597.D	105.0	97.0	105.0	100.0
F78145-1MS	H066219.D	104.0	89.0	95.0	99.0
F78145-1MSD	H066220.D	103.0	89.0	100.0	95.0
VG2581-BS	G0068549.D	103.0	93.0	98.0	110.0
VG2581-MB	G0068558.D	106.0	97.0	100.0	104.0
VG2582-BS	G0068591.D	104.0	94.0	99.0	107.0
VG2582-MB	G0068588.D	104.0	100.0	100.0	101.0
VH2463-BS	H066137.D	101.0	89.0	101.0	110.0
VH2463-MB	H066138.D	98.0	81.0	97.0	99.0
VH2464-BS	H066172.D	105.0	86.0	100.0	108.0
VH2464-MB	H066173.D	106.0	79.0	97.0	102.0
VH2465-BS	H066216.D	101.0	89.0	93.0	110.0
VH2465-MB	H066217.D	102.0	82.0	95.0	100.0

Surrogate Compounds	Recovery Limits
S1 = Dibromofluoromethane	80-121%
S2 = Toluene-D8	71-130%
S3 = 4-Bromofluorobenzene	59-148%
S4 = 1,2-Dichloroethane-D4	77-123%

(a) Outside control limits.
(b) Outside control limits; however, sample is ND.
(c) Outside control limits. Confirmed by reanalysis.

Initial Calibration Summary

Job Number: F78009
Account: TETTNOAK Tetra Tech, Inc
Project: Holloman AFB; Alamogordo, NM

Sample: VF1347-ICC1347
Lab FileID: F045996.D

Response Factor Report MSVOA9

```
Method       : C:\MSDCHEM\1\METHODS\8260FW.M (RTE Integrator)
Title        : SW-846 Method 5035A/8260B
Last Update  : Tue Nov 23 08:44:36 2010
Response via : Initial Calibration

Calibration Files
1   =F045993.D   2   =F045994.D   3   =F045995.D   4   =F045996.D
5      =F045997.D    6      =F045998.D

      Compound              1     2     3     4     5     6     Avg    %RSD
--------------------------------------------------------------------------------

1) I   Fluorobenzene         ----------------ISTD---------------------
2)     Dichlorodifluoromet 0.565 0.530 0.477 0.498 0.501 0.445 0.503   8.27
3) P   Chloromethane       0.953 0.948 0.853 0.859 0.855 0.747 0.869   8.71
4) C   Vinyl Chloride      0.608 0.686 0.612 0.604 0.583 0.511 0.601   9.38
5)     Bromomethane        0.499 0.356 0.287 0.241 0.214 0.171 0.295  40.16
           ---- Quadratic regr., Force(0,0) ----  Coefficient =  0.9989
             Response Ratio = 0.00000 + 0.30379 *A + -0.06616 *A^2

6)     Chloroethane        0.264 0.322 0.278 0.262 0.220 0.187 0.255  18.43
           ---- Quadratic regr., Force(0,0) ----  Coefficient =  0.9998
             Response Ratio = 0.00000 + 0.30546 *A + -0.05971 *A^2

7)     Trichlorofluorometh 0.706 0.723 0.683 0.656 0.629 0.539 0.656  10.17
8)     Ethyl Ether         0.328 0.351 0.325 0.307 0.295 0.252 0.310  10.97
9)     1,2-Dichlorotrifluo 0.548 0.499 0.414 0.394 0.381 0.325 0.427  19.25
           ---- Quadratic regr., Force(0,0) ----  Coefficient =  0.9983
             Response Ratio = 0.00000 + 0.46098 *A + -0.06642 *A^2

10) C  1,1-Dichloroethene  0.666 0.753 0.688 0.648 0.618 0.545 0.653  10.69
11)    Freon 113           0.419 0.378 0.344 0.335 0.309 0.271 0.343  15.12
           ---- Quadratic regr., Force(0,0) ----  Coefficient =  0.9996
             Response Ratio = 0.00000 + 0.38015 *A + -0.05390 *A^2

12)    Carbon Disulfide    1.280 1.308 1.206 1.144 1.088 0.904 1.155  12.81
13)    Iodomethane         0.661 0.731 0.666 0.646 0.630 0.538 0.645   9.76
14)    Allyl chloride      0.827 0.937 0.839 0.832 0.880 0.835 0.858   5.02
15)    Methylene Chloride  4.454 1.435 0.852 0.779 0.812 0.769 1.517  96.32
           ---- Linear regr., Force(0,0) ----  Coefficient =  0.9983
             Response Ratio = 0.00000 + 0.78563 *A

16)    Acetone             0.378 0.332 0.305 0.292 0.293 0.262 0.310  12.90
17)    Methyl acetate      0.360 0.372 0.350 0.350 0.358 0.331 0.353   3.84
18)    trans-1,2-Dichloroe 0.668 0.694 0.633 0.614 0.640 0.619 0.645   4.76
19)    Hexane              0.446 0.340 0.296 0.288 0.291 0.274 0.322  19.99
           ---- Linear regr., Force(0,0) ----  Coefficient =  0.9986
             Response Ratio = 0.00000 + 0.28108 *A

20)    Methyl Tert Butyl E 1.013 1.157 1.055 1.067 1.101 1.059 1.075   4.54
21)    Acetonitrile        0.083 0.066 0.062 0.061 0.065 0.057 0.066  14.08
22)    Di-isopropyl ether  1.677 1.746 1.706 1.696 1.759 1.615 1.700   3.04
23)    Chloroprene         0.592 0.713 0.678 0.683 0.735 0.699 0.683   7.24
24) P  1,1-Dichloroethane  0.741 0.783 0.730 0.730 0.757 0.724 0.744   2.99
25)    Acrylonitrile       0.188 0.178 0.180 0.183 0.189 0.174 0.182   3.07
26)    ETBE                1.310 1.452 1.443 1.472 1.497 1.374 1.425   4.88
27)    Vinyl acetate       0.875 1.005 1.026 0.986 0.954 0.832 0.946   8.13
28)    cis-1,2-Dichloroeth 0.399 0.401 0.379 0.374 0.384 0.373 0.385   3.17
```

Initial Calibration Summary

Job Number: F78009
Account: TETTNOAK Tetra Tech, Inc
Project: Holloman AFB; Alamogordo, NM

Sample: VF1347-ICC1347
Lab FileID: F045996.D

29)		2,2-Dichloropropane	0.565	0.598	0.539	0.545	0.561	0.537	0.557	4.10
30)		Bromochloromethane	0.209	0.226	0.216	0.210	0.215	0.200	0.213	4.11
31)		Cyclohexane	0.632	0.680	0.665	0.676	0.704	0.669	0.671	3.49
32)	C	Chloroform	0.673	0.737	0.677	0.678	0.697	0.662	0.687	3.90
33)		Ethyl acetate	0.626	0.625	0.627	0.625	0.636	0.567	0.618	4.10
34)		Tetrahydrofuran	0.148	0.167	0.147	0.148	0.156	0.144	0.152	5.53
35)	S	Dibromofluoromethan	0.295	0.289	0.287	0.284	0.283	0.277	0.286	2.09
36)		Carbon Tetrachlorid	0.518	0.637	0.594	0.584	0.606	0.575	0.586	6.79
37)		1,1,1-Trichloroetha	0.560	0.652	0.584	0.580	0.603	0.575	0.592	5.46
38)		2-Butanone	0.347	0.346	0.351	0.338	0.340	0.305	0.338	4.99
39)		1,1-Dichloropropene	0.447	0.500	0.476	0.473	0.498	0.479	0.479	4.03
40)		Propionitrile	0.073	0.074	0.071	0.071	0.071	0.065	0.071	4.72
41)		Methacrylonitrile	0.399	0.428	0.410	0.381	0.373	0.327	0.386	9.07
42)		Benzene	1.366	1.539	1.470	1.487	1.481	1.279	1.437	6.68
43)		TAME	1.056	1.173	1.177	1.190	1.222	1.115	1.155	5.18
44)	S	1,2-Dichloroethane-	0.358	0.345	0.350	0.355	0.346	0.338	0.349	2.08
45)		1,2-Dichloroethane	0.624	0.661	0.637	0.626	0.654	0.601	0.634	3.45
46)		Trichloroethene	0.388	0.419	0.387	0.377	0.393	0.381	0.391	3.78
47)		Methylcyclohexane	0.423	0.454	0.429	0.435	0.447	0.431	0.437	2.69
48)		Dibromomethane	0.253	0.264	0.245	0.240	0.260	0.251	0.252	3.57
49)	C	1,2-Dichloropropane	0.322	0.436	0.396	0.394	0.413	0.402	0.394	9.75
50)		Bromodichloromethan	0.515	0.515	0.482	0.489	0.519	0.498	0.503	3.11
51)		Methyl methacrylate	0.354	0.441	0.444	0.442	0.474	0.448	0.434	9.51
52)		2-Chloroethyl vinyl	0.117	0.181	0.211	0.229	0.252	0.238	0.205	24.31
		---- Linear regr., Force(0,0) ---- Coefficient = 0.9977								
		Response Ratio = 0.00000 + 0.24060 *A								
53)		cis-1,3-Dichloropro	0.610	0.615	0.616	0.594	0.632	0.616	0.614	2.00
54)	I	Chlorobenzene-d5	----------ISTD----------							
55)	S	Toluene-d8	1.173	1.159	1.145	1.098	1.107	1.179	1.144	2.96
56)	C	Toluene	1.725	1.971	1.814	1.756	1.826	1.821	1.819	4.67
57)		2-Nitropropane	0.121	0.132	0.136	0.142	0.151	0.150	0.139	8.36
58)		4-Methyl-2-pentanon	0.630	0.689	0.677	0.650	0.636	0.595	0.646	5.22
59)		trans-1,3-Dichlorop	0.622	0.668	0.642	0.650	0.674	0.692	0.658	3.80
60)		Tetrachloroethene	0.423	0.498	0.434	0.408	0.426	0.427	0.436	7.27
61)		Ethyl methacrylate	0.513	0.555	0.589	0.604	0.657	0.655	0.596	9.49
62)		1,1,2-Trichloroetha	0.334	0.373	0.353	0.331	0.354	0.355	0.350	4.40
63)		Dibromochloromethan	0.407	0.478	0.450	0.449	0.476	0.489	0.458	6.53
64)		1,3-Dichloropropane	0.713	0.740	0.667	0.661	0.704	0.710	0.699	4.29
65)		1,2-Dibromoethane	0.395	0.442	0.410	0.411	0.425	0.439	0.420	4.36
66)		2-hexanone	0.480	0.611	0.607	0.595	0.577	0.539	0.568	8.91
67)		1-Chlorohexane	0.495	0.546	0.537	0.518	0.565	0.588	0.542	6.11
68)	C	Ethylbenzene	2.112	2.293	2.148	2.128	2.194	2.113	2.164	3.22
69)	P	Chlorobenzene	1.267	1.423	1.278	1.264	1.302	1.274	1.302	4.68
70)		1,1,1,2-Tetrachloro	0.513	0.506	0.485	0.483	0.521	0.512	0.503	3.15
71)		m,p-Xylene	1.526	1.730	1.670	1.660	1.691	1.592	1.645	4.47
72)		o-Xylene	1.519	1.781	1.723	1.751	1.839	1.787	1.733	6.46
73)		Styrene	0.960	1.192	1.255	1.306	1.375	1.356	1.241	12.32
74)	P	Bromoform	0.254	0.279	0.305	0.317	0.339	0.345	0.306	11.53
75)		Isopropylbenzene	1.390	1.613	1.631	1.632	1.722	1.654	1.607	7.03
76)	I	1,4-Dichlorobenzene-d	----------ISTD----------							
77)	S	4-Bromofluorobenzen	0.914	0.904	0.887	0.897	0.920	0.972	0.916	3.29
78)		cis-1,4-Dichloro-2-	0.223	0.065	0.145	0.201	0.255	0.285	0.196	40.85
		---- Quadratic regr., Force(0,0) ---- Coefficient = 0.9984								
		Response Ratio = 0.00000 + 0.14739 *A + 0.07014 *A^2								
79)		n-Propylbenzene	3.895	4.248	4.149	4.070	4.305	4.150	4.136	3.49
80)		Bromobenzene	1.084	1.107	1.047	0.995	1.040	0.991	1.044	4.45

Initial Calibration Summary

Job Number: F78009
Account: TETTNOAK Tetra Tech, Inc
Project: Holloman AFB; Alamogordo, NM

Sample: VF1347-ICC1347
Lab FileID: F045996.D

```
 81) P   1,1,2,2-Tetrachloro 1.060 1.103 1.050 1.026 1.078 1.029 1.058   2.81
 82)     1,3,5-Trimethylbenz 2.542 2.861 2.830 2.799 2.961 2.840 2.806   4.99
 83)     2-Chlorotoluene     2.750 2.947 2.799 2.814 2.908 2.836 2.842   2.57
 84)     trans-1,4-Dichloro- 0.174 0.033 0.166 0.221 0.282 0.295 0.195  48.94
             ---- Quadratic regr., Force(0,0) ----  Coefficient =  0.9966
               Response Ratio = 0.00000 + 0.18215 *A + 0.05909 *A^2

 85)     1,2,3-Trichloroprop 0.293 0.309 0.286 0.281 0.302 0.294 0.294   3.50
 86)     Cyclohexanone       0.063 0.036 0.035 0.035 0.038 0.037 0.041  26.76
             ---- Linear regr., Force(0,0) ----  Coefficient =  0.9987
               Response Ratio = 0.00000 + 0.03713 *A

 87)     4-Chlorotoluene     2.590 2.769 2.789 2.767 2.975 2.872 2.794   4.58
 88)     tert-Butylbenzene   1.616 1.683 1.658 1.662 1.759 1.688 1.678   2.83
 89)     1,2,4-Trimethylbenz 2.538 3.162 2.998 3.001 3.122 2.931 2.959   7.54
 90)     Pentachloroethane   0.509 0.588 0.581 0.564 0.588 0.555 0.564   5.36
 91)     sec-Butylbenzene    3.419 3.450 3.190 3.144 3.299 3.151 3.276   4.13
 92)     4-Isopropyltoluene  2.600 2.753 2.681 2.665 2.831 2.701 2.705   2.93
 93)     1,3-Dichlorobenzene 1.839 2.004 1.885 1.859 1.950 1.878 1.903   3.28
 94)     1,4-Dichlorobenzene 2.350 2.159 1.961 1.931 2.013 1.907 2.053   8.31
 95)     n-Butylbenzene      1.337 1.316 1.538 1.599 1.712 1.658 1.527  10.86
 96)     Benzyl Chloride     0.420 0.431 0.430 0.443 0.483 0.475 0.447   5.78
 97)     1,2-Dichlorobenzene 1.987 2.076 1.906 1.914 1.979 1.886 1.958   3.61
 98)     1,2-Dibromo-3-Chlor 0.161 0.199 0.186 0.202 0.218 0.222 0.198  11.20
 99)     Hexachlorobutadiene 0.834 0.344 0.321 0.293 0.310 0.298 0.400  53.35
             ---- Linear regr., Force(0,0) ----  Coefficient =  0.9989
               Response Ratio = 0.00000 + 0.30140 *A

100)     1,2,4-Trichlorobenz 1.754 1.076 0.984 0.961 1.020 0.948 1.124  27.78
             ---- Linear regr., Force(0,0) ----  Coefficient =  0.9977
               Response Ratio = 0.00000 + 0.97122 *A

101)     Naphthalene         5.292 2.958 2.901 2.994 3.226 3.038 3.401  27.42
             ---- Linear regr., Force(0,0) ----  Coefficient =  0.9979
               Response Ratio = 0.00000 + 3.08470 *A

102)     1,2,3-Trichlorobenz 1.955 1.028 0.922 0.901 0.950 0.901 1.110  37.57
             ---- Linear regr., Force(0,0) ----  Coefficient =  0.9987
               Response Ratio = 0.00000 + 0.91595 *A


103) I   Tert Butyl Alcohol-d1 ----------------ISTD---------------------
104)     Ethanol             0.989 0.454 0.266 0.256 0.249 0.193 0.401  75.10
             ---- Quadratic regr., Force(0,0) ----  Coefficient =  0.9909
               Response Ratio = 0.00000 + 0.32257 *A + -0.01571 *A^2

105)     Acrolein            4.308 2.803 2.336 2.384 2.224 2.299 2.726  29.40
             ---- Linear regr., Force(0,0) ----  Coefficient =  0.9992
               Response Ratio = 0.00000 + 2.28704 *A

106)     Tert butyl alcohol  2.261 1.852 1.632 1.711 1.674 1.647 1.796  13.43
107)     Isobutyl alcohol    0.867 0.775 0.722 0.679 0.926 0.642 0.769  14.36
108)     Tert Amyl Alcohol   1.649 1.420 1.336 1.403 1.453 1.404 1.444   7.44
109)     1,4-Dioxane         0.234 0.137 0.126 0.160 0.139 0.147 0.157  25.04
             ---- Linear regr., Force(0,0) ----  Coefficient =  0.9956
               Response Ratio = 0.00000 + 0.14519 *A

 ---------------------------------------------------------------------------
 (#) = Out of Range
```

Initial Calibration Summary

Job Number: F78009
Account: TETTNOAK Tetra Tech, Inc
Project: Holloman AFB; Alamogordo, NM

Sample: VF1347-ICC1347
Lab FileID: F045996.D

8260FW.M Tue Nov 23 09:52:31 2010

Initial Calibration Verification

Job Number: F78009
Account: TETTNOAK Tetra Tech, Inc
Project: Holloman AFB; Alamogordo, NM

Sample: VF1347-ICV1347
Lab FileID: F045999.D

Evaluate Continuing Calibration Report

Data File : C:\MSDCHEM\1\DATA\112210\F045999.D Vial: 7
Acq On : 22 Nov 2010 3:44 pm Operator: StevenH
Sample : icv1347-3 Inst : MSVOA9
Misc : ms15845,vf1347,,,,, Multiplr: 1.00
MS Integration Params: rteint.p

Method : C:\MSDCHEM\1\METHODS\8260FW.M (RTE Integrator)
Title : SW-846 Method 5035A/8260B
Last Update : Tue Nov 23 08:44:36 2010
Response via : Multiple Level Calibration

Min. RRF : 0.001 Min. Rel. Area : 50% Max. R.T. Dev 0.50min
Max. RRF Dev : 20% Max. Rel. Area : 200%

	Compound	AvgRF	CCRF	%Dev	Area%	Dev(min)	R.T.
1 I	Fluorobenzene	1.000	1.000	0.0	123	0.00	10.30
2	Dichlorodifluoromethane	0.503	0.223	55.7#	55	0.00	4.27
3 P	Chloromethane	0.869	0.622	28.4#	89	0.00	4.59
4 C	Vinyl Chloride	0.601	0.388	35.4#	79	0.00	4.78
	----------	Amount	Calc.	%Drift		----------	
5	Bromomethane	40.000	26.591	33.5#	91	0.00	5.33
6	Chloroethane	40.000	26.762	33.1#	86	0.00	5.53
	----------	AvgRF	CCRF	%Dev		----------	
7	Trichlorofluoromethane	0.656	0.555	15.4	104	0.00	5.81
8	Ethyl Ether	0.310	0.259	16.5	104	0.00	6.15
	----------	Amount	Calc.	%Drift		----------	
9	1,2-Dichlorotrifluoroetha	40.000	37.403	6.5	120	-0.01	6.41
	----------	AvgRF	CCRF	%Dev		----------	
10 C	1,1-Dichloroethene	0.653	0.502	23.1#	95	0.00	6.50
	----------	Amount	Calc.	%Drift		----------	
11	Freon 113	40.000	31.368	21.6#	100	0.00	6.56
	----------	AvgRF	CCRF	%Dev		----------	
12	Carbon Disulfide	1.155	0.794	31.3#	85	0.00	6.62
13	Iodomethane	0.645	0.528	18.1	101	0.00	6.74
14	Allyl chloride	0.858	0.781	9.0	116	0.00	7.11
	----------	Amount	Calc.	%Drift		----------	
15	Methylene Chloride	40.000	39.409	1.5	122	0.00	7.26
	----------	AvgRF	CCRF	%Dev		----------	
16	Acetone	0.310	0.170	45.2#	72	0.00	7.30
17	Methyl acetate	0.353	0.349	1.1	123	0.00	7.42
18	trans-1,2-Dichloroethene	0.645	0.606	6.0	122	0.00	7.47
	----------	Amount	Calc.	%Drift		----------	
19	Hexane	40.000	41.047	-2.6	124	0.00	7.52
	----------	AvgRF	CCRF	%Dev		----------	
20	Methyl Tert Butyl Ether	1.075	1.111	-3.3	128	0.00	7.57
21	Acetonitrile	0.066	0.056	15.2	113	0.00	7.90
22	Di-isopropyl ether	1.700	1.720	-1.2	125	0.00	7.99

Initial Calibration Verification

Job Number: F78009
Account: TETTNOAK Tetra Tech, Inc
Project: Holloman AFB; Alamogordo, NM

Sample: VF1347-ICV1347
Lab FileID: F045999.D

23		Chloroprene	0.683	0.689	-0.9	124	0.00	8.20
24	P	1,1-Dichloroethane	0.744	0.713	4.2	120	0.00	8.23
25		Acrylonitrile	0.182	0.169	7.1	114	0.00	8.27
26		ETBE	1.425	1.402	1.6	117	0.00	8.44
27		Vinyl acetate	0.946	0.812	14.2	101	0.00	8.45
28		cis-1,2-Dichloroethene	0.385	0.393	-2.1	130	0.00	8.88
29		2,2-Dichloropropane	0.557	0.549	1.4	124	0.00	9.02
30		Bromochloromethane	0.213	0.202	5.2	119	0.00	9.11
31		Cyclohexane	0.671	0.659	1.8	120	0.00	9.17
32	C	Chloroform	0.687	0.690	-0.4	125	0.00	9.16
33		Ethyl acetate	0.618	0.347	43.9#	68	0.00	9.22
34		Tetrahydrofuran	0.152	0.147	3.3	122	0.00	9.38
35	S	Dibromofluoromethane	0.286	0.283	1.0	123	0.00	9.38
36		Carbon Tetrachloride	0.586	0.596	-1.7	126	0.00	9.39
37		1,1,1-Trichloroethane	0.592	0.589	0.5	125	0.00	9.46
38		2-Butanone	0.338	0.247	26.9#	90	0.00	9.49
39		1,1-Dichloropropene	0.479	0.488	-1.9	127	0.00	9.58
40		Propionitrile	0.071	0.063	11.3	110	0.00	9.85
41		Methacrylonitrile	0.386	0.339	12.2	110	0.00	9.87
42		Benzene	1.437	1.389	3.3	115	0.00	9.87
43		TAME	1.155	1.152	0.3	119	0.00	9.92
44	S	1,2-Dichloroethane-d4	0.349	0.339	2.9	118	0.00	10.01
45		1,2-Dichloroethane	0.634	0.604	4.7	119	0.00	10.08
46		Trichloroethene	0.391	0.393	-0.5	129	0.00	10.50
47		Methylcyclohexane	0.437	0.461	-5.5	131	0.00	10.52
48		Dibromomethane	0.252	0.253	-0.4	130	0.00	10.98
49	C	1,2-Dichloropropane	0.394	0.401	-1.8	125	0.00	11.08
50		Bromodichloromethane	0.503	0.492	2.2	124	0.00	11.12
51		Methyl methacrylate	0.434	0.417	3.9	116	0.00	11.20
		----------	Amount	Calc.	%Drift		----------	
52		2-Chloroethyl vinyl ether	200.000	184.419	7.8	119	0.00	11.66
		----------	AvgRF	CCRF	%Dev		----------	
53		cis-1,3-Dichloropropene	0.614	0.629	-2.4	130	0.00	11.79
54	I	Chlorobenzene-d5	1.000	1.000	0.0	115	0.00	13.70
55	S	Toluene-d8	1.144	1.175	-2.7	123	0.00	12.00
56	C	Toluene	1.819	1.899	-4.4	124	0.00	12.06
57		2-Nitropropane	0.139	0.145	-4.3	117	0.00	12.30
58		4-Methyl-2-pentanone	0.646	0.623	3.6	110	0.00	12.40
59		trans-1,3-Dichloropropene	0.658	0.753	-14.4	133	0.00	12.47
60		Tetrachloroethene	0.436	0.452	-3.7	127	0.00	12.51
61		Ethyl methacrylate	0.596	0.605	-1.5	115	0.00	12.55
62		1,1,2-Trichloroethane	0.350	0.363	-3.7	126	0.00	12.66
63		Dibromochloromethane	0.458	0.493	-7.6	126	0.00	12.88
64		1,3-Dichloropropane	0.699	0.726	-3.9	126	0.00	12.98
65		1,2-Dibromoethane	0.420	0.440	-4.8	123	0.00	13.19
66		2-hexanone	0.568	0.456	19.7	88	0.00	13.28
67		1-Chlorohexane	0.542	0.588	-8.5	130	0.00	13.62
68	C	Ethylbenzene	2.164	2.207	-2.0	119	0.00	13.70
69	P	Chlorobenzene	1.302	1.332	-2.3	121	0.00	13.72
70		1,1,1,2-Tetrachloroethane	0.503	0.524	-4.2	125	0.00	13.76
71		m,p-Xylene	1.645	1.723	-4.7	119	0.00	13.84
72		o-Xylene	1.733	1.856	-7.1	122	0.00	14.32
73		Styrene	1.241	1.359	-9.5	120	0.00	14.37
74	P	Bromoform	0.306	0.330	-7.8	119	0.00	14.46
75		Isopropylbenzene	1.607	1.974	-22.8#	139	0.00	14.64
76	I	1,4-Dichlorobenzene-d4	1.000	1.000	0.0	110	0.00	16.20

Initial Calibration Verification

Job Number: F78009
Account: TETTNOAK Tetra Tech, Inc
Project: Holloman AFB; Alamogordo, NM

Sample: VF1347-ICV1347
Lab FileID: F045999.D

77	S	4-Bromofluorobenzene	0.916	0.945	-3.2	116	0.00	14.99
		----------	Amount	Calc.	%Drift			----------
78		cis-1,4-Dichloro-2-butene	40.000	43.437	-8.6	124	0.00	15.01
		----------	AvgRF	CCRF	%Dev			----------
79		n-Propylbenzene	4.136	4.406	-6.5	119	0.00	15.08
80		Bromobenzene	1.044	1.053	-0.9	117	0.00	15.13
81	P	1,1,2,2-Tetrachloroethane	1.058	1.105	-4.4	119	0.00	15.14
82		1,3,5-Trimethylbenzene	2.806	2.988	-6.5	118	0.00	15.26
83		2-Chlorotoluene	2.842	2.997	-5.5	118	0.00	15.30
		----------	Amount	Calc.	%Drift			----------
84		trans-1,4-Dichloro-2-Bute	40.000	42.837	-7.1	125	0.00	15.34
		----------	AvgRF	CCRF	%Dev			----------
85		1,2,3-Trichloropropane	0.294	0.279	5.1	110	0.00	15.33
		----------	Amount	Calc.	%Drift			----------
86		Cyclohexanone	200.000	195.598	2.2	115	0.00	15.43
		----------	AvgRF	CCRF	%Dev			----------
87		4-Chlorotoluene	2.794	2.991	-7.1	119	0.00	15.48
88		tert-Butylbenzene	1.678	1.806	-7.6	120	0.00	15.63
89		1,2,4-Trimethylbenzene	2.959	3.230	-9.2	119	0.00	15.70
90		Pentachloroethane	0.564	0.573	-1.6	112	0.00	15.70
91		sec-Butylbenzene	3.276	3.403	-3.9	119	0.00	15.82
92		4-Isopropyltoluene	2.705	2.933	-8.4	121	0.00	15.95
93		1,3-Dichlorobenzene	1.903	1.970	-3.5	117	0.00	16.13
94		1,4-Dichlorobenzene	2.053	2.044	0.4	117	0.00	16.22
95		n-Butylbenzene	1.527	1.719	-12.6	119	0.00	16.42
96		Benzyl Chloride	0.447	0.484	-8.3	121	0.00	16.46
97		1,2-Dichlorobenzene	1.958	1.983	-1.3	114	0.00	16.69
98		1,2-Dibromo-3-Chloropropa	0.198	0.224	-13.1	122	0.00	17.52
		----------	Amount	Calc.	%Drift			----------
99		Hexachlorobutadiene	40.000	45.741	-14.4	130	0.00	18.18
100		1,2,4-Trichlorobenzene	40.000	43.295	-8.2	121	0.00	18.26
101		Naphthalene	40.000	43.116	-7.8	123	0.00	18.64
102		1,2,3-Trichlorobenzene	40.000	43.577	-8.9	122	0.00	18.87
		----------	AvgRF	CCRF	%Dev			----------
103	I	Tert Butyl Alcohol-d10	1.000	1.000	0.0	133	0.00	7.52
		----------	Amount	Calc.	%Drift			----------
104		Ethanol	800.000	545.478	31.8#	103	0.00	6.32
105		Acrolein	200.000	106.350	46.8#	68	0.00	6.93
		----------	AvgRF	CCRF	%Dev			----------
106		Tert butyl alcohol	1.796	1.612	10.2	126	0.00	7.61
107		Isobutyl alcohol	0.769	0.584	24.1#	115	0.00	9.92
108		Tert Amyl Alcohol	1.444	1.339	7.3	127	0.00	10.06
		----------	Amount	Calc.	%Drift			----------
109		1,4-Dioxane	800.000	784.597	1.9	119	0.00	11.31

(#) = Out of Range SPCC's out = 0 CCC's out = 2

Initial Calibration Verification

Job Number: F78009
Account: TETTNOAK Tetra Tech, Inc
Project: Holloman AFB; Alamogordo, NM

Sample: VF1347-ICV1347
Lab FileID: F045999.D

F045996.D 8260FW.M Tue Nov 23 09:52:01 2010

Continuing Calibration Summary

Job Number: F78009
Account: TETTNOAK Tetra Tech, Inc
Project: Holloman AFB; Alamogordo, NM

Sample: VF1348-CC1347
Lab FileID: F046023.D

Evaluate Continuing Calibration Report

Data File : C:\MSDCHEM\1\DATA\112310\F046023.D Vial: 4
Acq On : 23 Nov 2010 9:55 am Operator: StevenH
Sample : cc1347-4 Inst : MSVOA9
Misc : ms15845,vf1348,,,,, Multiplr: 1.00
MS Integration Params: rteint.p

Method : C:\MSDCHEM\1\METHODS\8260FW.M (RTE Integrator)
Title : SW-846 Method 5035A/8260B
Last Update : Wed Nov 24 08:20:57 2010
Response via : Multiple Level Calibration

Min. RRF : 0.001 Min. Rel. Area : 50% Max. R.T. Dev 0.50min
Max. RRF Dev : 20% Max. Rel. Area : 200%

	Compound	AvgRF	CCRF	%Dev	Area%	Dev(min)	R.T.
1 I	Fluorobenzene	1.000	1.000	0.0	104	0.00	10.31
2	Dichlorodifluoromethane	0.465	0.452	2.8	97	0.00	4.26
3 P	Chloromethane	0.855	0.760	11.1	93	0.00	4.59
4 C	Vinyl Chloride	0.693	0.646	6.8	98	0.00	4.78
		Amount	Calc.	%Drift			
5	Bromomethane	40.000	46.709	-16.8	93	0.00	5.34
		AvgRF	CCRF	%Dev			
6	Chloroethane	0.310	0.290	6.5	98	0.00	5.53
7	Trichlorofluoromethane	0.729	0.725	0.5	103	0.00	5.80
8	Ethyl Ether	0.346	0.327	5.5	98	0.00	6.15
9	1,2-Dichlorotrifluoroetha	0.483	0.452	6.4	106	0.00	6.41
10 C	1,1-Dichloroethene	0.733	0.694	5.3	101	0.00	6.50
11	Freon 113	0.362	0.371	-2.5	104	0.01	6.56
12	Carbon Disulfide	1.315	1.270	3.4	103	0.00	6.60
13	Iodomethane	0.704	0.682	3.1	102	0.00	6.74
14	Allyl chloride	0.841	0.808	3.9	107	0.00	7.12
		Amount	Calc.	%Drift			
15	Methylene Chloride	40.000	45.549	-13.9	111	0.00	7.26
		AvgRF	CCRF	%Dev			
16	Acetone	0.289	0.275	4.8	106	0.00	7.29
17	Methyl acetate	0.346	0.312	9.8	97	0.00	7.42
18	trans-1,2-Dichloroethene	0.615	0.601	2.3	103	0.00	7.47
		Amount	Calc.	%Drift			
19	Hexane	40.000	40.130	-0.3	101	0.00	7.53
		AvgRF	CCRF	%Dev			
20	Methyl Tert Butyl Ether	1.049	0.978	6.8	97	0.00	7.57
		Amount	Calc.	%Drift			
21	Acetonitrile	400.000	342.210	14.4	63	0.00	7.91
		AvgRF	CCRF	%Dev			
22	Di-isopropyl ether	1.589	1.600	-0.7	102	0.00	7.99
23	Chloroprene	0.653	0.660	-1.1	105	0.00	8.20
24 P	1,1-Dichloroethane	0.731	0.704	3.7	103	0.00	8.24
25	Acrylonitrile	0.177	0.171	3.4	102	0.00	8.28
26	ETBE	1.362	1.375	-1.0	101	0.00	8.44

Continuing Calibration Summary

Job Number: F78009
Account: TETTNOAK Tetra Tech, Inc
Project: Holloman AFB; Alamogordo, NM

Sample: VF1348-CC1347
Lab FileID: F046023.D

27		Vinyl acetate	0.935	0.963	-3.0	101	0.00	8.45
28		cis-1,2-Dichloroethene	0.383	0.372	2.9	103	0.00	8.88
29		2,2-Dichloropropane	0.531	0.518	2.4	103	0.01	9.04
30		Bromochloromethane	0.215	0.212	1.4	100	0.00	9.12
		----------	Amount	Calc.	%Drift	----------		
31		Cyclohexane	40.000	38.399	4.0	101	0.00	9.17
		----------	AvgRF	CCRF	%Dev	----------		
32	C	Chloroform	0.690	0.659	4.5	101	0.00	9.16
33		Ethyl acetate	0.580	0.566	2.4	98	0.00	9.22
		----------	Amount	Calc.	%Drift	----------		
34		Tetrahydrofuran	40.000	32.259	19.4	99	0.00	9.39
		----------	AvgRF	CCRF	%Dev	----------		
35	S	Dibromofluoromethane	0.294	0.289	1.7	103	0.00	9.38
36		Carbon Tetrachloride	0.606	0.590	2.6	103	0.00	9.39
37		1,1,1-Trichloroethane	0.582	0.570	2.1	102	0.00	9.46
38		2-Butanone	0.315	0.308	2.2	101	0.00	9.49
39		1,1-Dichloropropene	0.457	0.456	0.2	100	0.00	9.59
40		Propionitrile	0.065	0.064	1.5	102	0.00	9.85
41		Methacrylonitrile	0.382	0.376	1.6	99	0.00	9.88
42		Benzene	1.465	1.416	3.3	101	0.00	9.87
43		TAME	1.114	1.096	1.6	100	0.00	9.92
44	S	1,2-Dichloroethane-d4	0.346	0.343	0.9	103	0.00	10.01
45		1,2-Dichloroethane	0.624	0.602	3.5	102	0.00	10.08
46		Trichloroethene	0.383	0.370	3.4	103	0.00	10.50
47		Methylcyclohexane	0.404	0.418	-3.5	103	0.00	10.53
48		Dibromomethane	0.254	0.239	5.9	101	0.00	10.99
49	C	1,2-Dichloropropane	0.383	0.383	0.0	101	0.00	11.08
50		Bromodichloromethane	0.491	0.475	3.3	102	0.00	11.12
		----------	Amount	Calc.	%Drift	----------		
51		Methyl methacrylate	40.000	36.402	9.0	93	0.00	11.20
52		2-Chloroethyl vinyl ether	200.000	185.499	7.3	98	0.00	11.66
		----------	AvgRF	CCRF	%Dev	----------		
53		cis-1,3-Dichloropropene	0.589	0.564	4.2	97	0.00	11.80
54	I	Chlorobenzene-d5	1.000	1.000	0.0	102	0.00	13.70
55	S	Toluene-d8	1.103	1.101	0.2	102	0.00	12.00
56	C	Toluene	1.762	1.710	3.0	99	0.00	12.07
57		2-Nitropropane	0.135	0.130	3.7	92	0.00	12.30
58		4-Methyl-2-pentanone	0.598	0.607	-1.5	98	0.00	12.41
59		trans-1,3-Dichloropropene	0.615	0.621	-1.0	100	0.00	12.47
60		Tetrachloroethene	0.443	0.413	6.8	98	0.00	12.51
		----------	Amount	Calc.	%Drift	----------		
61		Ethyl methacrylate	40.000	38.161	4.6	99	0.00	12.56
		----------	AvgRF	CCRF	%Dev	----------		
62		1,1,2-Trichloroethane	0.337	0.323	4.2	99	0.00	12.67
63		Dibromochloromethane	0.465	0.440	5.4	96	0.00	12.89
64		1,3-Dichloropropane	0.659	0.624	5.3	97	0.00	12.98
65		1,2-Dibromoethane	0.404	0.390	3.5	97	0.00	13.19
66		2-hexanone	0.522	0.565	-8.2	102	0.00	13.29
67		1-Chlorohexane	0.488	0.508	-4.1	97	0.00	13.62
68	C	Ethylbenzene	2.067	2.054	0.6	100	0.00	13.70
69	P	Chlorobenzene	1.299	1.225	5.7	98	0.00	13.72

Continuing Calibration Summary

Job Number: F78009
Account: TETTNOAK Tetra Tech, Inc
Project: Holloman AFB; Alamogordo, NM

Sample: VF1348-CC1347
Lab FileID: F046023.D

70		1,1,1,2-Tetrachloroethane	0.491	0.493	-0.4	103	0.00	13.77
71		m,p-Xylene	1.547	1.600	-3.4	99	0.00	13.84
		----------	Amount	Calc.	%Drift		----------	
72		o-Xylene	40.000	38.004	5.0	98	0.00	14.32
73		Styrene	40.000	41.298	-3.2	103	0.00	14.37
		----------	AvgRF	CCRF	%Dev		----------	
74	P	Bromoform	0.310	0.300	3.2	94	0.00	14.46
		----------	Amount	Calc.	%Drift		----------	
75		Isopropylbenzene	40.000	39.012	2.5	100	0.00	14.64
		----------	AvgRF	CCRF	%Dev		----------	
76	I	1,4-Dichlorobenzene-d4	1.000	1.000	0.0	105	0.00	16.21
77	S	4-Bromofluorobenzene	0.856	0.847	1.1	104	0.00	14.99
		----------	Amount	Calc.	%Drift		----------	
78		cis-1,4-Dichloro-2-butene	40.000	60.536	-51.3#	125	0.00	15.01
		----------	AvgRF	CCRF	%Dev		----------	
79		n-Propylbenzene	3.873	3.865	0.2	103	0.00	15.08
80		Bromobenzene	1.012	0.958	5.3	101	0.00	15.14
81	P	1,1,2,2-Tetrachloroethane	0.990	0.938	5.3	98	0.00	15.15
		----------	Amount	Calc.	%Drift		----------	
82		1,3,5-Trimethylbenzene	40.000	36.949	7.6	100	0.00	15.26
		----------	AvgRF	CCRF	%Dev		----------	
83		2-Chlorotoluene	2.617	2.576	1.6	100	0.00	15.30
		----------	Amount	Calc.	%Drift		----------	
84		trans-1,4-Dichloro-2-Bute	40.000	55.608	-39.0#	116	0.00	15.34
		----------	AvgRF	CCRF	%Dev		----------	
85		1,2,3-Trichloropropane	0.271	0.257	5.2	95	0.00	15.34
		----------	Amount	Calc.	%Drift		----------	
86		Cyclohexanone	200.000	160.973	19.5	114	0.00	15.42
		----------	AvgRF	CCRF	%Dev		----------	
87		4-Chlorotoluene	2.547	2.646	-3.9	102	0.00	15.48
88		tert-Butylbenzene	1.496	1.524	-1.9	98	0.00	15.63
89		1,2,4-Trimethylbenzene	2.856	2.793	2.2	103	0.00	15.70
90		Pentachloroethane	0.574	0.575	-0.2	108	0.00	15.70
91		sec-Butylbenzene	2.866	2.907	-1.4	99	0.00	15.83
92		4-Isopropyltoluene	2.398	2.520	-5.1	102	0.00	15.95
93		1,3-Dichlorobenzene	1.839	1.759	4.4	101	0.00	16.13
94		1,4-Dichlorobenzene	2.026	1.841	9.1	101	0.00	16.22
		----------	Amount	Calc.	%Drift		----------	
95		n-Butylbenzene	40.000	39.713	0.7	103	0.00	16.42
		----------	AvgRF	CCRF	%Dev		----------	
96		Benzyl Chloride	0.409	0.420	-2.7	102	0.00	16.46
97		1,2-Dichlorobenzene	1.897	1.791	5.6	100	0.00	16.70
98		1,2-Dibromo-3-Chloropropa	0.189	0.164	13.2	94	0.00	17.52
		----------	Amount	Calc.	%Drift		----------	

Continuing Calibration Summary

Job Number: F78009
Account: TETTNOAK Tetra Tech, Inc
Project: Holloman AFB; Alamogordo, NM

Sample: VF1348-CC1347
Lab FileID: F046023.D

99	Hexachlorobutadiene	40.000	40.042	-0.1	106	0.00	18.18
100	1,2,4-Trichlorobenzene	40.000	38.414	4.0	102	0.00	18.26
	----------	AvgRF	CCRF	%Dev	----------		
101	Naphthalene	2.944	2.589	12.1	95	0.00	18.64
	----------	Amount	Calc.	%Drift	----------		
102	1,2,3-Trichlorobenzene	40.000	36.175	9.6	99	0.00	18.87
	----------	AvgRF	CCRF	%Dev	----------		
103 I	Tert Butyl Alcohol-d10	1.000	1.000	0.0	94	0.01	7.52
	----------	Amount	Calc.	%Drift	----------		
104	Ethanol	800.000	842.097	-5.3	119	0.00	6.32
105	Acrolein	200.000	225.633	-12.8	108	0.00	6.93
	----------	AvgRF	CCRF	%Dev	----------		
106	Tert butyl alcohol	1.723	1.561	9.4	95	0.00	7.61
	----------	Amount	Calc.	%Drift	----------		
107	Isobutyl alcohol	800.000	759.655	5.0	65	0.00	9.92
	----------	AvgRF	CCRF	%Dev	----------		
108	Tert Amyl Alcohol	1.388	1.295	6.7	93	0.00	10.07
	----------	Amount	Calc.	%Drift	----------		
109	1,4-Dioxane	800.000	749.861	6.3	123	0.00	11.31

(#) = Out of Range SPCC's out = 0 CCC's out = 0
F046040.D 8260FW.M Wed Nov 24 09:14:43 2010

Initial Calibration Summary

Job Number: F78009
Account: TETTNOAK Tetra Tech, Inc
Project: Holloman AFB; Alamogordo, NM

Sample: VF1349-ICC1349
Lab FileID: F046040.D

Response Factor Report MSVOA9

Method : C:\MSDCHEM\1\METHODS\8260FW.M (RTE Integrator)
Title : SW-846 Method 5035A/8260B
Last Update : Wed Nov 24 08:20:57 2010
Response via : Initial Calibration

Calibration Files
1 =F046037.D 2 =F046038.D 3 =F046039.D 4 =F046040.D
5 =F046041.D 6 =F046042.D

		Compound	1	2	3	4	5	6	Avg	%RSD
1)	I	Fluorobenzene	----------ISTD----------							
2)		Dichlorodifluoromet	0.449	0.455	0.439	0.485	0.496	0.469	0.465	4.73
3)	P	Chloromethane	0.889	0.874	0.801	0.851	0.871	0.846	0.855	3.61
4)	C	Vinyl Chloride	0.766	0.742	0.661	0.690	0.679	0.618	0.693	7.79
5)		Bromomethane	0.542	0.435	0.359	0.316	0.267	0.235	0.359	31.73
		---- Quadratic regr., Force(0,0) ---- Coefficient = 0.9992								
		Response Ratio = 0.00000 + 0.36751 *A + -0.06719 *A^2								
6)		Chloroethane	0.351	0.355	0.310	0.308	0.283	0.255	0.310	12.54
7)		Trichlorofluorometh	0.746	0.801	0.709	0.730	0.724	0.664	0.729	6.17
8)		Ethyl Ether	0.329	0.376	0.350	0.348	0.341	0.329	0.346	4.99
9)		1,2-Dichlorotrifluo	0.602	0.522	0.453	0.446	0.451	0.424	0.483	13.86
10)	C	1,1-Dichloroethene	0.736	0.807	0.715	0.714	0.732	0.694	0.733	5.37
11)		Freon 113	0.337	0.400	0.359	0.372	0.363	0.339	0.362	6.42
12)		Carbon Disulfide	1.457	1.428	1.291	1.287	1.255	1.173	1.315	8.19
13)		Iodomethane	0.678	0.775	0.699	0.697	0.697	0.677	0.704	5.17
14)		Allyl chloride	0.869	0.828	0.807	0.788	0.852	0.905	0.841	5.07
15)		Methylene Chloride	4.359	1.567	0.947	0.843	0.827	0.832	1.562	89.56
		---- Linear regr., Force(0,0) ---- Coefficient = 0.9993								
		Response Ratio = 0.00000 + 0.83574 *A								
16)		Acetone	0.329	0.301	0.277	0.270	0.276	0.280	0.289	7.64
17)		Methyl acetate	0.348	0.353	0.330	0.336	0.347	0.363	0.346	3.43
18)		trans-1,2-Dichloroe	0.560	0.640	0.595	0.606	0.633	0.658	0.615	5.76
19)		Hexane	0.425	0.267	0.275	0.290	0.290	0.288	0.306	19.33
		---- Linear regr., Force(0,0) ---- Coefficient = 0.9998								
		Response Ratio = 0.00000 + 0.28830 *A								
20)		Methyl Tert Butyl E	0.960	1.054	1.012	1.050	1.097	1.122	1.049	5.57
21)		Acetonitrile	0.081	0.059	0.091	0.093	0.097	0.099	0.087	17.25
		---- Linear regr., Force(0,0) ---- Coefficient = 0.9994								
		Response Ratio = 0.00000 + 0.09752 *A								
22)		Di-isopropyl ether	1.339	1.494	1.527	1.640	1.738	1.797	1.589	10.66
23)		Chloroprene	0.527	0.589	0.639	0.655	0.728	0.780	0.653	14.01
24)	P	1,1-Dichloroethane	0.664	0.749	0.714	0.715	0.762	0.781	0.731	5.73
25)		Acrylonitrile	0.161	0.178	0.175	0.175	0.181	0.190	0.177	5.41
26)		ETBE	1.089	1.268	1.303	1.419	1.548	1.546	1.362	13.09
27)		Vinyl acetate	0.750	0.902	0.986	0.996	1.010	0.963	0.935	10.48
28)		cis-1,2-Dichloroeth	0.369	0.385	0.379	0.375	0.390	0.398	0.383	2.74
29)		2,2-Dichloropropane	0.519	0.532	0.503	0.524	0.551	0.555	0.531	3.73
30)		Bromochloromethane	0.188	0.235	0.219	0.221	0.217	0.213	0.215	7.10
31)		Cyclohexane	0.368	0.622	0.621	0.665	0.696	0.710	0.614	20.53
		---- Linear regr., Force(0,0) ---- Coefficient = 0.9993								
		Response Ratio = 0.00000 + 0.69942 *A								

Initial Calibration Summary

Job Number: F78009 **Sample:** VF1349-ICC1349
Account: TETTNOAK Tetra Tech, Inc **Lab FileID:** F046040.D
Project: Holloman AFB; Alamogordo, NM

32)	C	Chloroform	0.662	0.698	0.675	0.678	0.700	0.726	0.690	3.31
33)		Ethyl acetate	0.473	0.546	0.593	0.605	0.626	0.635	0.580	10.54
34)		Tetrahydrofuran	0.207	0.075	0.137	0.129	0.144	0.153	0.141	30.22

---- Linear regr., Force(0,0) ---- Coefficient = 0.9959
Response Ratio = 0.00000 + 0.14800 *A

35)	S	Dibromofluoromethan	0.294	0.298	0.298	0.292	0.291	0.292	0.294	1.05
36)		Carbon Tetrachlorid	0.570	0.652	0.589	0.599	0.606	0.621	0.606	4.70
37)		1,1,1-Trichloroetha	0.526	0.590	0.572	0.582	0.614	0.607	0.582	5.43
38)		2-Butanone	0.294	0.317	0.314	0.317	0.322	0.327	0.315	3.56
39)		1,1-Dichloropropene	0.382	0.438	0.446	0.476	0.491	0.507	0.457	9.84
40)		Propionitrile	0.057	0.064	0.067	0.066	0.069	0.070	0.065	7.14
41)		Methacrylonitrile	0.348	0.381	0.401	0.396	0.387	0.378	0.382	4.87
42)		Benzene	1.341	1.506	1.470	1.457	1.534	1.482	1.465	4.54
43)		TAME	0.948	1.020	1.086	1.137	1.245	1.248	1.114	10.82
44)	S	1,2-Dichloroethane-	0.330	0.332	0.340	0.347	0.364	0.365	0.346	4.44
45)		1,2-Dichloroethane	0.579	0.606	0.602	0.617	0.662	0.676	0.624	6.00
46)		Trichloroethene	0.370	0.383	0.375	0.376	0.394	0.399	0.383	3.05
47)		Methylcyclohexane	0.351	0.383	0.393	0.422	0.441	0.435	0.404	8.52
48)		Dibromomethane	0.234	0.269	0.254	0.246	0.257	0.263	0.254	5.01
49)	C	1,2-Dichloropropane	0.320	0.365	0.384	0.393	0.409	0.427	0.383	9.73
50)		Bromodichloromethan	0.456	0.488	0.486	0.486	0.505	0.526	0.491	4.75
51)		Methyl methacrylate	0.313	0.356	0.415	0.443	0.474	0.484	0.414	16.37

---- Linear regr., Force(0,0) ---- Coefficient = 0.9989
Response Ratio = 0.00000 + 0.47543 *A

52)		2-Chloroethyl vinyl	0.127	0.182	0.214	0.238	0.260	0.265	0.214	24.49

---- Linear regr., Force(0,0) ---- Coefficient = 0.9983
Response Ratio = 0.00000 + 0.25962 *A

53)		cis-1,3-Dichloropro	0.481	0.569	0.588	0.609	0.640	0.647	0.589	10.30
54)	I	Chlorobenzene-d5	----------ISTD----------							
55)	S	Toluene-d8	1.126	1.108	1.101	1.098	1.101	1.084	1.103	1.25
56)	C	Toluene	1.737	1.763	1.744	1.759	1.800	1.769	1.762	1.25
57)		2-Nitropropane	0.108	0.119	0.134	0.144	0.153	0.154	0.135	13.99
58)		4-Methyl-2-pentanon	0.485	0.610	0.622	0.632	0.637	0.600	0.598	9.48
59)		trans-1,3-Dichlorop	0.511	0.589	0.598	0.635	0.679	0.677	0.615	10.30
60)		Tetrachloroethene	0.486	0.454	0.449	0.428	0.428	0.410	0.443	6.01
61)		Ethyl methacrylate	0.439	0.463	0.545	0.584	0.628	0.635	0.549	15.08

---- Linear regr., Force(0,0) ---- Coefficient = 0.9990
Response Ratio = 0.00000 + 0.62600 *A

62)		1,1,2-Trichloroetha	0.322	0.350	0.334	0.333	0.343	0.340	0.337	2.90
63)		Dibromochloromethan	0.450	0.462	0.463	0.469	0.473	0.474	0.465	1.94
64)		1,3-Dichloropropane	0.637	0.659	0.651	0.653	0.677	0.678	0.659	2.41
65)		1,2-Dibromoethane	0.377	0.410	0.399	0.411	0.415	0.412	0.404	3.57
66)		2-hexanone	0.395	0.508	0.554	0.566	0.572	0.537	0.522	12.73
67)		1-Chlorohexane	0.371	0.453	0.486	0.532	0.547	0.540	0.488	13.93
68)	C	Ethylbenzene	1.872	2.056	2.038	2.096	2.185	2.154	2.067	5.36
69)	P	Chlorobenzene	1.373	1.313	1.253	1.279	1.295	1.280	1.299	3.18
70)		1,1,1,2-Tetrachloro	0.496	0.482	0.485	0.487	0.497	0.501	0.491	1.63
71)		m,p-Xylene	1.201	1.546	1.569	1.643	1.691	1.629	1.547	11.47
72)		o-Xylene	1.009	1.500	1.647	1.708	1.799	1.784	1.574	18.90

---- Linear regr., Force(0,0) ---- Coefficient = 0.9996
Response Ratio = 0.00000 + 1.77737 *A

73)		Styrene	0.796	1.120	1.224	1.264	1.338	1.351	1.182	17.49

---- Linear regr., Force(0,0) ---- Coefficient = 0.9995
Response Ratio = 0.00000 + 1.33560 *A

Initial Calibration Summary

Job Number: F78009
Account: TETTNOAK Tetra Tech, Inc
Project: Holloman AFB; Alamogordo, NM

Sample: VF1349-ICC1349
Lab FileID: F046040.D

```
 74) P   Bromoform           0.256 0.290 0.314 0.324 0.340 0.336 0.310  10.32
 75)     Isopropylbenzene    1.031 1.407 1.522 1.595 1.659 1.637 1.475  16.01
             ---- Linear regr., Force(0,0) ----  Coefficient =  0.9997
               Response Ratio = 0.00000 + 1.63638 *A


 76) I   1,4-Dichlorobenzene-d ----------------ISTD--------------------
 77) S   4-Bromofluorobenzen 0.826 0.807 0.847 0.849 0.890 0.919 0.856   4.84
 78)     cis-1,4-Dichloro-2- 0.373 0.206 0.252 0.293 0.334 0.361 0.303  21.56
             ---- Linear regr., Force(0,0) ----  Coefficient =  0.9932
               Response Ratio = 0.00000 + 0.34389 *A

 79)     n-Propylbenzene     3.541 3.728 3.851 3.933 4.108 4.080 3.873   5.58
 80)     Bromobenzene        1.004 1.032 1.010 0.992 1.020 1.015 1.012   1.35
 81) P   1,1,2,2-Tetrachloro 0.890 0.967 0.980 0.998 1.051 1.050 0.990   6.06
 82)     1,3,5-Trimethylbenz 1.750 2.387 2.620 2.698 2.836 2.809 2.517  16.24
             ---- Linear regr., Force(0,0) ----  Coefficient =  0.9997
               Response Ratio = 0.00000 + 2.80129 *A

 83)     2-Chlorotoluene     2.375 2.373 2.594 2.696 2.832 2.830 2.617   7.95
 84)     trans-1,4-Dichloro- 0.282 0.189 0.264 0.310 0.355 0.365 0.294  22.02
             ---- Linear regr., Force(0,0) ----  Coefficient =  0.9962
               Response Ratio = 0.00000 + 0.35391 *A

 85)     1,2,3-Trichloroprop 0.236 0.263 0.263 0.282 0.289 0.293 0.271   7.84
 86)     Cyclohexanone       0.034 0.009 0.023 0.027 0.030 0.032 0.026  35.11
             ---- Linear regr., Force(0,0) ----  Coefficient =  0.9958
               Response Ratio = 0.00000 + 0.03084 *A

 87)     4-Chlorotoluene     1.926 2.375 2.582 2.710 2.835 2.851 2.547  13.81
 88)     tert-Butylbenzene   1.156 1.379 1.485 1.622 1.662 1.670 1.496  13.48
 89)     1,2,4-Trimethylbenz       2.623 2.781 2.829 3.061 2.987 2.856   6.06
 90)     Pentachloroethane   0.571 0.576 0.575 0.556 0.582 0.583 0.574   1.73
 91)     sec-Butylbenzene    2.406 2.622 2.917 3.064 3.146 3.042 2.866  10.13
 92)     4-Isopropyltoluene  1.902 2.189 2.441 2.589 2.658 2.608 2.398  12.36
 93)     1,3-Dichlorobenzene 1.783 1.832 1.829 1.827 1.903 1.860 1.839   2.17
 94)     1,4-Dichlorobenzene 2.321 2.058 1.980 1.899 1.970 1.928 2.026   7.61
 95)     n-Butylbenzene      1.130 1.051 1.431 1.539 1.604 1.602 1.393  17.49
             ---- Linear regr., Force(0,0) ----  Coefficient =  0.9996
               Response Ratio = 0.00000 + 1.59159 *A

 96)     Benzyl Chloride     0.358 0.368 0.396 0.428 0.452 0.452 0.409  10.07
 97)     1,2-Dichlorobenzene 1.875 1.893 1.916 1.876 1.928 1.892 1.897   1.13
 98)     1,2-Dibromo-3-Chlor 0.192 0.170 0.180 0.183 0.201 0.207 0.189   7.42
 99)     Hexachlorobutadiene 0.543 0.284 0.298 0.298 0.297 0.283 0.334  30.73
             ---- Linear regr., Force(0,0) ----  Coefficient =  0.9988
               Response Ratio = 0.00000 + 0.28885 *A

100)     1,2,4-Trichlorobenz 1.346 0.870 0.947 0.960 0.957 0.927 1.001  17.21
             ---- Linear regr., Force(0,0) ----  Coefficient =  0.9995
               Response Ratio = 0.00000 + 0.93945 *A

101)     Naphthalene         3.576 2.580 2.767 2.839 2.953 2.950 2.944  11.51
102)     1,2,3-Trichlorobenz 1.402 0.851 0.916 0.873 0.882 0.873 0.966  22.23
             ---- Linear regr., Force(0,0) ----  Coefficient =  0.9999
               Response Ratio = 0.00000 + 0.87634 *A


103) I   Tert Butyl Alcohol-d1 ----------------ISTD--------------------
```

Initial Calibration Summary

Job Number: F78009
Account: TETTNOAK Tetra Tech, Inc
Project: Holloman AFB; Alamogordo, NM

Sample: VF1349-ICC1349
Lab FileID: F046040.D

```
104)     Ethanol             1.253 0.455 0.259 0.224 0.234 0.224 0.442  92.22
             ---- Linear regr., Force(0,0) ----  Coefficient =  0.9984
               Response Ratio = 0.00000 + 0.22846 *A

105)     Acrolein            3.917 3.132 2.778 2.250 2.453 2.330 2.810  22.52
             ---- Linear regr., Force(0,0) ----  Coefficient =  0.9972
               Response Ratio = 0.00000 + 2.36955 *A

106)     Tert butyl alcohol  2.052 1.704 1.627 1.539 1.707 1.708 1.723  10.13
107)     Isobutyl alcohol    1.453 0.901 1.185 1.058 1.058 0.992 1.108  17.41
             ---- Linear regr., Force(0,0) ----  Coefficient =  0.9971
               Response Ratio = 0.00000 + 1.02192 *A

108)     Tert Amyl Alcohol   1.511 1.235 1.298 1.305 1.515 1.467 1.388   8.86
109)     1,4-Dioxane         0.229 0.107 0.089 0.104 0.121 0.118 0.128  39.75
             ---- Linear regr., Force(0,0) ----  Coefficient =  0.9950
               Response Ratio = 0.00000 + 0.11662 *A

 ---------------------------------------------------------------------------
 (#) = Out of Range

           8260FW.M          Wed Nov 24 09:15:37 2010
```

Initial Calibration Verification

Job Number: F78009
Account: TETTNOAK Tetra Tech, Inc
Project: Holloman AFB; Alamogordo, NM

Sample: VF1349-ICV1349
Lab FileID: F046043.D

Evaluate Continuing Calibration Report

```
Data File : C:\MSDCHEM\1\DATA\112310\F046043.D          Vial: 7
Acq On    : 23 Nov 2010   7:19 pm                   Operator: StevenH
Sample    : icv1349-4                               Inst    : MSVOA9
Misc      : ms15845,vf1349,,,,,                     Multiplr: 1.00
MS Integration Params: rteint.p

Method       : C:\MSDCHEM\1\METHODS\8260FW.M (RTE Integrator)
Title        : SW-846 Method 5035A/8260B
Last Update  : Wed Nov 24 08:20:57 2010
Response via : Multiple Level Calibration

Min. RRF     :   0.001  Min. Rel. Area :  50%  Max. R.T. Dev  0.50min
Max. RRF Dev :  20%     Max. Rel. Area : 200%
```

		Compound	AvgRF	CCRF	%Dev	Area%	Dev(min)	R.T.
1	I	Fluorobenzene	1.000	1.000	0.0	119	0.00	10.30
2		Dichlorodifluoromethane	0.465	0.573	-23.2#	140	0.00	4.26
3	P	Chloromethane	0.855	1.013	-18.5	142	0.00	4.59
4	C	Vinyl Chloride	0.693	0.607	12.4	105	0.00	4.78
		----------	Amount	Calc.	%Drift		----------	
5		Bromomethane	40.000	32.531	18.7	99	0.00	5.33
		----------	AvgRF	CCRF	%Dev		----------	
6		Chloroethane	0.310	0.268	13.5	104	0.00	5.53
7		Trichlorofluoromethane	0.729	0.725	0.5	118	0.00	5.80
8		Ethyl Ether	0.346	0.316	8.7	108	0.00	6.15
9		1,2-Dichlorotrifluoroetha	0.483	0.483	0.0	129	0.01	6.43
10	C	1,1-Dichloroethene	0.733	0.602	17.9	100	0.00	6.50
11		Freon 113	0.362	0.304	16.0	97	0.02	6.56
12		Carbon Disulfide	1.315	0.949	27.8#	88	0.00	6.60
13		Iodomethane	0.704	0.619	12.1	106	0.00	6.74
14		Allyl chloride	0.841	0.828	1.5	125	0.00	7.11
		----------	Amount	Calc.	%Drift		----------	
15		Methylene Chloride	40.000	41.052	-2.6	121	0.00	7.26
		----------	AvgRF	CCRF	%Dev		----------	
16		Acetone	0.289	0.179	38.1#	79	0.00	7.29
17		Methyl acetate	0.346	0.376	-8.7	133	0.00	7.42
18		trans-1,2-Dichloroethene	0.615	0.630	-2.4	124	0.00	7.47
		----------	Amount	Calc.	%Drift		----------	
19		Hexane	40.000	39.840	0.4	118	0.00	7.53
		----------	AvgRF	CCRF	%Dev		----------	
20		Methyl Tert Butyl Ether	1.049	1.127	-7.4	128	0.00	7.57
		----------	Amount	Calc.	%Drift		----------	
21		Acetonitrile	400.000	404.235	-1.1	127	0.00	7.90
		----------	AvgRF	CCRF	%Dev		----------	
22		Di-isopropyl ether	1.589	1.869	-17.6	136	0.00	7.99
23		Chloroprene	0.653	0.725	-11.0	132	0.00	8.20
24	P	1,1-Dichloroethane	0.731	0.746	-2.1	124	0.00	8.23
25		Acrylonitrile	0.177	0.177	0.0	120	0.00	8.27
26		ETBE	1.362	1.520	-11.6	128	0.00	8.44

Initial Calibration Verification

Job Number: F78009
Account: TETTNOAK Tetra Tech, Inc
Project: Holloman AFB; Alamogordo, NM

Sample: VF1349-ICV1349
Lab FileID: F046043.D

27		Vinyl acetate	0.935	0.894	4.4	107	0.00	8.45
28		cis-1,2-Dichloroethene	0.383	0.398	-3.9	126	0.00	8.87
29		2,2-Dichloropropane	0.531	0.550	-3.6	125	0.00	9.02
30		Bromochloromethane	0.215	0.213	0.9	115	0.00	9.12
		----------	Amount	Calc.	%Drift	----------		
31		Cyclohexane	40.000	38.177	4.6	119	0.00	9.17
		----------	AvgRF	CCRF	%Dev	----------		
32	C	Chloroform	0.690	0.725	-5.1	127	0.00	9.16
33		Ethyl acetate	0.580	0.381	34.3#	75	0.00	9.22
		----------	Amount	Calc.	%Drift	----------		
34		Tetrahydrofuran	40.000	42.690	-6.7	145	0.00	9.38
		----------	AvgRF	CCRF	%Dev	----------		
35	S	Dibromofluoromethane	0.294	0.288	2.0	117	0.00	9.37
36		Carbon Tetrachloride	0.606	0.628	-3.6	125	0.00	9.39
37		1,1,1-Trichloroethane	0.582	0.600	-3.1	123	0.00	9.46
38		2-Butanone	0.315	0.259	17.8	97	0.00	9.49
39		1,1-Dichloropropene	0.457	0.494	-8.1	123	0.00	9.58
40		Propionitrile	0.065	0.066	-1.5	118	0.00	9.85
41		Methacrylonitrile	0.382	0.371	2.9	112	0.00	9.87
42		Benzene	1.465	1.524	-4.0	124	0.00	9.87
43		TAME	1.114	1.260	-13.1	132	0.00	9.92
44	S	1,2-Dichloroethane-d4	0.346	0.361	-4.3	124	0.00	10.00
45		1,2-Dichloroethane	0.624	0.664	-6.4	128	0.00	10.08
46		Trichloroethene	0.383	0.400	-4.4	127	0.00	10.50
47		Methylcyclohexane	0.404	0.450	-11.4	127	0.00	10.53
48		Dibromomethane	0.254	0.265	-4.3	128	0.00	10.98
49	C	1,2-Dichloropropane	0.383	0.415	-8.4	126	0.00	11.08
50		Bromodichloromethane	0.491	0.523	-6.5	128	0.00	11.11
		----------	Amount	Calc.	%Drift	----------		
51		Methyl methacrylate	40.000	36.246	9.4	116	0.00	11.19
52		2-Chloroethyl vinyl ether	200.000	192.783	3.6	125	0.00	11.66
		----------	AvgRF	CCRF	%Dev	----------		
53		cis-1,3-Dichloropropene	0.589	0.660	-12.1	129	0.00	11.79
54	I	Chlorobenzene-d5	1.000	1.000	0.0	116	0.00	13.70
55	S	Toluene-d8	1.103	1.119	-1.5	118	0.00	12.00
56	C	Toluene	1.762	1.869	-6.1	123	0.00	12.06
57		2-Nitropropane	0.135	0.153	-13.3	123	0.00	12.30
58		4-Methyl-2-pentanone	0.598	0.648	-8.4	119	0.00	12.40
59		trans-1,3-Dichloropropene	0.615	0.762	-23.9#	139	0.00	12.47
60		Tetrachloroethene	0.443	0.452	-2.0	122	0.00	12.51
		----------	Amount	Calc.	%Drift	----------		
61		Ethyl methacrylate	40.000	37.659	5.9	117	0.00	12.55
		----------	AvgRF	CCRF	%Dev	----------		
62		1,1,2-Trichloroethane	0.337	0.359	-6.5	125	0.00	12.66
63		Dibromochloromethane	0.465	0.489	-5.2	121	0.00	12.88
64		1,3-Dichloropropane	0.659	0.704	-6.8	125	0.00	12.98
65		1,2-Dibromoethane	0.404	0.431	-6.7	121	0.00	13.19
66		2-hexanone	0.522	0.468	10.3	96	0.00	13.29
67		1-Chlorohexane	0.488	0.549	-12.5	119	0.00	13.62
68	C	Ethylbenzene	2.067	2.244	-8.6	124	0.00	13.70
69	P	Chlorobenzene	1.299	1.358	-4.5	123	0.00	13.72

Initial Calibration Verification

Job Number: F78009
Account: TETTNOAK Tetra Tech, Inc
Project: Holloman AFB; Alamogordo, NM

Sample: VF1349-ICV1349
Lab FileID: F046043.D

70		1,1,1,2-Tetrachloroethane	0.491	0.528	-7.5	126	0.00	13.76
71		m,p-Xylene	1.547	1.748	-13.0	123	0.00	13.84
		----------	Amount	Calc.	%Drift	----------		
72		o-Xylene	40.000	41.553	-3.9	125	0.00	14.32
73		Styrene	40.000	41.195	-3.0	126	0.00	14.37
		----------	AvgRF	CCRF	%Dev	----------		
74	P	Bromoform	0.310	0.333	-7.4	119	0.00	14.46
		----------	Amount	Calc.	%Drift	----------		
75		Isopropylbenzene	40.000	47.933	-19.8	142	0.00	14.64
		----------	AvgRF	CCRF	%Dev	----------		
76	I	1,4-Dichlorobenzene-d4	1.000	1.000	0.0	112	0.00	16.20
77	S	4-Bromofluorobenzene	0.856	0.910	-6.3	120	0.00	14.99
		----------	Amount	Calc.	%Drift	----------		
78		cis-1,4-Dichloro-2-butene	40.000	37.003	7.5	121	0.00	15.01
		----------	AvgRF	CCRF	%Dev	----------		
79		n-Propylbenzene	3.873	4.373	-12.9	124	0.00	15.08
80		Bromobenzene	1.012	1.052	-4.0	118	0.00	15.13
81	P	1,1,2,2-Tetrachloroethane	0.990	1.126	-13.7	126	0.00	15.14
		----------	Amount	Calc.	%Drift	----------		
82		1,3,5-Trimethylbenzene	40.000	42.542	-6.4	123	0.00	15.26
		----------	AvgRF	CCRF	%Dev	----------		
83		2-Chlorotoluene	2.617	3.025	-15.6	125	0.00	15.30
		----------	Amount	Calc.	%Drift	----------		
84		trans-1,4-Dichloro-2-Bute	40.000	40.588	-1.5	129	0.00	15.34
		----------	AvgRF	CCRF	%Dev	----------		
85		1,2,3-Trichloropropane	0.271	0.281	-3.7	111	0.00	15.33
		----------	Amount	Calc.	%Drift	----------		
86		Cyclohexanone	200.000	221.624	-10.8	139	0.00	15.43
		----------	AvgRF	CCRF	%Dev	----------		
87		4-Chlorotoluene	2.547	3.012	-18.3	124	0.00	15.48
88		tert-Butylbenzene	1.496	1.781	-19.1	123	0.00	15.63
89		1,2,4-Trimethylbenzene	2.856	3.228	-13.0	127	0.00	15.70
90		Pentachloroethane	0.574	0.571	0.5	115	0.00	15.70
91		sec-Butylbenzene	2.866	3.300	-15.1	120	0.00	15.82
92		4-Isopropyltoluene	2.398	2.796	-16.6	120	0.00	15.95
93		1,3-Dichlorobenzene	1.839	1.936	-5.3	118	0.00	16.13
94		1,4-Dichlorobenzene	2.026	2.054	-1.4	121	0.00	16.22
		----------	Amount	Calc.	%Drift	----------		
95		n-Butylbenzene	40.000	41.104	-2.8	119	0.00	16.42
		----------	AvgRF	CCRF	%Dev	----------		
96		Benzyl Chloride	0.409	0.445	-8.8	116	0.00	16.46
97		1,2-Dichlorobenzene	1.897	2.013	-6.1	120	0.00	16.69
98		1,2-Dibromo-3-Chloropropa	0.189	0.214	-13.2	131	0.00	17.52
		----------	Amount	Calc.	%Drift	----------		

Initial Calibration Verification

Job Number: F78009
Account: TETTNOAK Tetra Tech, Inc
Project: Holloman AFB; Alamogordo, NM

Sample: VF1349-ICV1349
Lab FileID: F046043.D

99	Hexachlorobutadiene	40.000	46.263	-15.7	125	0.00	18.18
100	1,2,4-Trichlorobenzene	40.000	42.223	-5.6	115	0.00	18.26
	----------	AvgRF	CCRF	%Dev	----------		
101	Naphthalene	2.944	3.133	-6.4	123	0.00	18.64
	----------	Amount	Calc.	%Drift	----------		
102	1,2,3-Trichlorobenzene	40.000	42.574	-6.4	119	0.00	18.87
	----------	AvgRF	CCRF	%Dev	----------		
103 I	Tert Butyl Alcohol-d10	1.000	1.000	0.0	125	0.00	7.51
	----------	Amount	Calc.	%Drift	----------		
104	Ethanol	800.000	793.559	0.8	126	0.00	6.32
105	Acrolein	200.000	120.743	39.6#	79	0.00	6.93
	----------	AvgRF	CCRF	%Dev	----------		
106	Tert butyl alcohol	1.723	1.740	-1.0	141	0.00	7.61
	----------	Amount	Calc.	%Drift	----------		
107	Isobutyl alcohol	800.000	768.504	3.9	116	0.00	9.92
	----------	AvgRF	CCRF	%Dev	----------		
108	Tert Amyl Alcohol	1.388	1.465	-5.5	140	0.00	10.06
	----------	Amount	Calc.	%Drift	----------		
109	1,4-Dioxane	800.000	983.995	-23.0#	172	0.00	11.31

(#) = Out of Range SPCC's out = 0 CCC's out = 0
F046040.D 8260FW.M Wed Nov 24 09:15:01 2010

Continuing Calibration Summary

Job Number: F78009
Account: TETTNOAK Tetra Tech, Inc
Project: Holloman AFB; Alamogordo, NM

Sample: VF1350-CC1349
Lab FileID: F046050.D

Evaluate Continuing Calibration Report

Data File : C:\MSDCHEM\1\DATA\112410\F046050.D Vial: 1
Acq On : 24 Nov 2010 9:52 am Operator: StevenH
Sample : cc1349-4 Inst : MSVOA9
Misc : ms15845,vf1350,,,,, Multiplr: 1.00
MS Integration Params: rteint.p

Method : C:\MSDCHEM\1\METHODS\8260FW.M (RTE Integrator)
Title : SW-846 Method 5035A/8260B
Last Update : Wed Nov 24 09:35:49 2010
Response via : Multiple Level Calibration

Min. RRF : 0.001 Min. Rel. Area : 50% Max. R.T. Dev 0.50min
Max. RRF Dev : 20% Max. Rel. Area : 200%

		Compound	AvgRF	CCRF	%Dev	Area%	Dev(min)	R.T.
1	I	Fluorobenzene	1.000	1.000	0.0	116	0.00	10.31
2		Dichlorodifluoromethane	0.465	0.463	0.4	111	0.00	4.26
3	P	Chloromethane	0.855	0.780	8.8	107	0.01	4.60
4	C	Vinyl Chloride	0.693	0.612	11.7	103	0.00	4.79
			Amount	Calc.	%Drift			
5		Bromomethane	40.000	34.243	14.4	102	0.00	5.34
			AvgRF	CCRF	%Dev			
6		Chloroethane	0.310	0.285	8.1	108	0.00	5.53
7		Trichlorofluoromethane	0.729	0.692	5.1	110	0.00	5.81
8		Ethyl Ether	0.346	0.316	8.7	106	0.00	6.15
9		1,2-Dichlorotrifluoroetha	0.483	0.435	9.9	114	0.00	6.42
10	C	1,1-Dichloroethene	0.733	0.687	6.3	112	0.00	6.50
11		Freon 113	0.362	0.356	1.7	111	0.00	6.55
12		Carbon Disulfide	1.315	1.193	9.3	108	0.00	6.60
13		Iodomethane	0.704	0.662	6.0	111	0.00	6.73
14		Allyl chloride	0.841	0.835	0.7	123	0.00	7.11
			Amount	Calc.	%Drift			
15		Methylene Chloride	40.000	40.246	-0.6	116	0.00	7.26
			AvgRF	CCRF	%Dev			
16		Acetone	0.289	0.271	6.2	117	0.00	7.30
17		Methyl acetate	0.346	0.314	9.2	109	0.00	7.43
18		trans-1,2-Dichloroethene	0.615	0.615	0.0	118	0.00	7.47
			Amount	Calc.	%Drift			
19		Hexane	40.000	40.356	-0.9	117	0.00	7.53
			AvgRF	CCRF	%Dev			
20		Methyl Tert Butyl Ether	1.049	1.032	1.6	114	0.00	7.57
			Amount	Calc.	%Drift			
21		Acetonitrile	400.000	387.877	3.0	118	0.00	7.91
			AvgRF	CCRF	%Dev			
22		Di-isopropyl ether	1.589	1.679	-5.7	119	0.00	7.99
23		Chloroprene	0.653	0.702	-7.5	125	0.00	8.20
24	P	1,1-Dichloroethane	0.731	0.707	3.3	115	0.00	8.23
25		Acrylonitrile	0.177	0.170	4.0	113	0.00	8.28
26		ETBE	1.362	1.425	-4.6	117	0.00	8.44

Continuing Calibration Summary

Job Number: F78009
Account: TETTNOAK Tetra Tech, Inc
Project: Holloman AFB; Alamogordo, NM

Sample: VF1350-CC1349
Lab FileID: F046050.D

27		Vinyl acetate	0.935	0.952	-1.8	111	0.00	8.45
28		cis-1,2-Dichloroethene	0.383	0.373	2.6	116	0.00	8.88
29		2,2-Dichloropropane	0.531	0.533	-0.4	118	0.00	9.03
30		Bromochloromethane	0.215	0.210	2.3	111	0.00	9.12
		----------	Amount	Calc.	%Drift	----------		
31		Cyclohexane	40.000	39.471	1.3	121	0.00	9.17
		----------	AvgRF	CCRF	%Dev	----------		
32	C	Chloroform	0.690	0.663	3.9	114	0.00	9.16
33		Ethyl acetate	0.580	0.564	2.8	109	0.00	9.22
		----------	Amount	Calc.	%Drift	----------		
34		Tetrahydrofuran	40.000	34.580	13.6	115	0.00	9.38
		----------	AvgRF	CCRF	%Dev	----------		
35	S	Dibromofluoromethane	0.294	0.294	0.0	117	0.00	9.38
36		Carbon Tetrachloride	0.606	0.594	2.0	116	0.00	9.40
37		1,1,1-Trichloroethane	0.582	0.596	-2.4	119	0.00	9.47
38		2-Butanone	0.315	0.298	5.4	110	0.00	9.49
39		1,1-Dichloropropene	0.457	0.462	-1.1	113	0.00	9.58
40		Propionitrile	0.065	0.064	1.5	113	0.00	9.85
41		Methacrylonitrile	0.382	0.373	2.4	110	0.00	9.88
42		Benzene	1.465	1.434	2.1	115	0.00	9.87
43		TAME	1.114	1.126	-1.1	115	0.00	9.92
44	S	1,2-Dichloroethane-d4	0.346	0.349	-0.9	117	0.00	10.01
45		1,2-Dichloroethane	0.624	0.611	2.1	115	0.00	10.08
46		Trichloroethene	0.383	0.365	4.7	113	0.00	10.50
47		Methylcyclohexane	0.404	0.436	-7.9	121	0.00	10.53
48		Dibromomethane	0.254	0.241	5.1	114	0.00	10.98
49	C	1,2-Dichloropropane	0.383	0.383	0.0	113	0.00	11.08
50		Bromodichloromethane	0.491	0.477	2.9	114	0.00	11.11
		----------	Amount	Calc.	%Drift	----------		
51		Methyl methacrylate	40.000	34.879	12.8	109	0.00	11.19
52		2-Chloroethyl vinyl ether	200.000	178.776	10.6	114	0.00	11.66
		----------	AvgRF	CCRF	%Dev	----------		
53		cis-1,3-Dichloropropene	0.589	0.585	0.7	112	0.00	11.80
54	I	Chlorobenzene-d5	1.000	1.000	0.0	113	0.00	13.70
55	S	Toluene-d8	1.103	1.114	-1.0	115	0.00	12.01
56	C	Toluene	1.762	1.733	1.6	111	0.00	12.06
57		2-Nitropropane	0.135	0.134	0.7	105	0.00	12.30
58		4-Methyl-2-pentanone	0.598	0.605	-1.2	108	0.00	12.40
59		trans-1,3-Dichloropropene	0.615	0.639	-3.9	114	0.00	12.47
60		Tetrachloroethene	0.443	0.415	6.3	109	0.00	12.51
		----------	Amount	Calc.	%Drift	----------		
61		Ethyl methacrylate	40.000	36.972	7.6	112	0.00	12.56
		----------	AvgRF	CCRF	%Dev	----------		
62		1,1,2-Trichloroethane	0.337	0.323	4.2	109	0.00	12.66
63		Dibromochloromethane	0.465	0.443	4.7	107	0.00	12.89
64		1,3-Dichloropropane	0.659	0.648	1.7	112	0.00	12.98
65		1,2-Dibromoethane	0.404	0.395	2.2	109	0.00	13.19
66		2-hexanone	0.522	0.547	-4.8	109	0.00	13.29
67		1-Chlorohexane	0.488	0.531	-8.8	113	0.00	13.61
68	C	Ethylbenzene	2.067	2.086	-0.9	113	0.00	13.70
69	P	Chlorobenzene	1.299	1.239	4.6	110	0.00	13.72

Continuing Calibration Summary

Job Number: F78009
Account: TETTNOAK Tetra Tech, Inc
Project: Holloman AFB; Alamogordo, NM

Sample: VF1350-CC1349
Lab FileID: F046050.D

70		1,1,1,2-Tetrachloroethane	0.491	0.496	-1.0	115	0.00	13.77
71		m,p-Xylene	1.547	1.618	-4.6	111	0.00	13.84
		----------	Amount	Calc.	%Drift		----------	
72		o-Xylene	40.000	38.773	3.1	114	0.00	14.32
73		Styrene	40.000	38.379	4.1	115	0.00	14.37
		----------	AvgRF	CCRF	%Dev		----------	
74	P	Bromoform	0.310	0.303	2.3	106	0.00	14.46
		----------	Amount	Calc.	%Drift		----------	
75		Isopropylbenzene	40.000	39.505	1.2	115	0.00	14.64
		----------	AvgRF	CCRF	%Dev		----------	
76	I	1,4-Dichlorobenzene-d4	1.000	1.000	0.0	115	0.00	16.20
77	S	4-Bromofluorobenzene	0.856	0.882	-3.0	119	0.00	14.99
		----------	Amount	Calc.	%Drift		----------	
78		cis-1,4-Dichloro-2-butene	40.000	42.244	-5.6	142	0.00	15.01
		----------	AvgRF	CCRF	%Dev		----------	
79		n-Propylbenzene	3.873	3.914	-1.1	114	0.00	15.08
80		Bromobenzene	1.012	0.963	4.8	111	0.00	15.14
81	P	1,1,2,2-Tetrachloroethane	0.990	0.946	4.4	109	0.00	15.15
		----------	Amount	Calc.	%Drift		----------	
82		1,3,5-Trimethylbenzene	40.000	38.092	4.8	114	0.00	15.26
		----------	AvgRF	CCRF	%Dev		----------	
83		2-Chlorotoluene	2.617	2.680	-2.4	114	0.00	15.31
		----------	Amount	Calc.	%Drift		----------	
84		trans-1,4-Dichloro-2-Bute	40.000	40.575	-1.4	133	0.00	15.34
		----------	AvgRF	CCRF	%Dev		----------	
85		1,2,3-Trichloropropane	0.271	0.263	3.0	107	0.00	15.33
		----------	Amount	Calc.	%Drift		----------	
86		Cyclohexanone	200.000	173.684	13.2	112	0.00	15.42
		----------	AvgRF	CCRF	%Dev		----------	
87		4-Chlorotoluene	2.547	2.661	-4.5	113	0.00	15.48
88		tert-Butylbenzene	1.496	1.557	-4.1	110	0.00	15.63
89		1,2,4-Trimethylbenzene	2.856	2.857	-0.0	116	0.00	15.70
90		Pentachloroethane	0.574	0.563	1.9	116	0.00	15.71
91		sec-Butylbenzene	2.866	2.972	-3.7	111	0.00	15.82
92		4-Isopropyltoluene	2.398	2.503	-4.4	111	0.00	15.95
93		1,3-Dichlorobenzene	1.839	1.744	5.2	110	0.00	16.13
94		1,4-Dichlorobenzene	2.026	1.847	8.8	112	0.00	16.22
		----------	Amount	Calc.	%Drift		----------	
95		n-Butylbenzene	40.000	37.308	6.7	111	0.00	16.41
		----------	AvgRF	CCRF	%Dev		----------	
96		Benzyl Chloride	0.409	0.392	4.2	105	0.00	16.46
97		1,2-Dichlorobenzene	1.897	1.782	6.1	109	0.00	16.69
98		1,2-Dibromo-3-Chloropropa	0.189	0.167	11.6	105	0.00	17.52
		----------	Amount	Calc.	%Drift		----------	

Continuing Calibration Summary

Job Number: F78009
Account: TETTNOAK Tetra Tech, Inc
Project: Holloman AFB; Alamogordo, NM

Sample: VF1350-CC1349
Lab FileID: F046050.D

99	Hexachlorobutadiene	40.000	40.227	-0.6	112	0.00	18.18
100	1,2,4-Trichlorobenzene	40.000	37.465	6.3	105	0.00	18.26
	----------	AvgRF	CCRF	%Dev	----------		
101	Naphthalene	2.944	2.538	13.8	103	0.00	18.64
	----------	Amount	Calc.	%Drift	----------		
102	1,2,3-Trichlorobenzene	40.000	36.087	9.8	104	0.00	18.87
	----------	AvgRF	CCRF	%Dev	----------		
103 I	Tert Butyl Alcohol-d10	1.000	1.000	0.0	107	0.02	7.53
	----------	Amount	Calc.	%Drift	----------		
104	Ethanol	800.000	886.807	-10.9	121	0.00	6.32
105	Acrolein	200.000	198.679	0.7	112	0.00	6.92
	----------	AvgRF	CCRF	%Dev	----------		
106	Tert butyl alcohol	1.723	1.563	9.3	108	0.00	7.61
	----------	Amount	Calc.	%Drift	----------		
107	Isobutyl alcohol	800.000	879.124	-9.9	113	0.00	9.92
	----------	AvgRF	CCRF	%Dev	----------		
108	Tert Amyl Alcohol	1.388	1.335	3.8	109	0.00	10.06
	----------	Amount	Calc.	%Drift	----------		
109	1,4-Dioxane	800.000	879.847	-10.0	132	0.00	11.31

(#) = Out of Range SPCC's out = 0 CCC's out = 0
F046040.D 8260FW.M Mon Nov 29 12:35:38 2010

Continuing Calibration Summary

Job Number: F78009
Account: TETTNOAK Tetra Tech, Inc
Project: Holloman AFB; Alamogordo, NM

Sample: VF1353-CC1349
Lab FileID: F046110.D

Evaluate Continuing Calibration Report

Data File : C:\MSDCHEM\1\DATA\113010\F046110.D Vial: 1
Acq On : 30 Nov 2010 10:25 am Operator: logand
Sample : cc1349-4 Inst : MSVOA9
Misc : ms15845,vf1353,,,,, Multiplr: 1.00
MS Integration Params: rteint.p

Method : C:\MSDCHEM\1\METHODS\8260FW.M (RTE Integrator)
Title : SW-846 Method 5035A/8260B
Last Update : Wed Nov 24 09:35:49 2010
Response via : Multiple Level Calibration

Min. RRF : 0.001 Min. Rel. Area : 50% Max. R.T. Dev 0.50min
Max. RRF Dev : 20% Max. Rel. Area : 200%

		Compound	AvgRF	CCRF	%Dev	Area%	Dev(min)	R.T.
1	I	Fluorobenzene	1.000	1.000	0.0	101	0.00	10.31
2		Dichlorodifluoromethane	0.465	0.379	18.5	79	0.00	4.26
3	P	Chloromethane	0.855	0.734	14.2	87	0.02	4.60
4	C	Vinyl Chloride	0.693	0.626	9.7	92	0.00	4.79
			Amount	Calc.	%Drift			
5		Bromomethane	40.000	40.326	-0.8	101	0.00	5.34
			AvgRF	CCRF	%Dev			
6		Chloroethane	0.310	0.305	1.6	100	0.00	5.53
7		Trichlorofluoromethane	0.729	0.702	3.7	97	0.01	5.81
8		Ethyl Ether	0.346	0.347	-0.3	101	0.00	6.15
9		1,2-Dichlorotrifluoroetha	0.483	0.448	7.2	102	0.01	6.43
10	C	1,1-Dichloroethene	0.733	0.697	4.9	99	0.00	6.50
11		Freon 113	0.362	0.341	5.8	93	0.02	6.56
12		Carbon Disulfide	1.315	1.261	4.1	99	0.00	6.60
13		Iodomethane	0.704	0.692	1.7	100	0.00	6.74
14		Allyl chloride	0.841	0.809	3.8	104	0.00	7.12
			Amount	Calc.	%Drift			
15		Methylene Chloride	40.000	35.788	10.5	90	0.00	7.26
			AvgRF	CCRF	%Dev			
16		Acetone	0.289	0.277	4.2	104	0.00	7.30
17		Methyl acetate	0.346	0.313	9.5	94	0.00	7.42
18		trans-1,2-Dichloroethene	0.615	0.586	4.7	98	0.00	7.47
			Amount	Calc.	%Drift			
19		Hexane	40.000	38.182	4.5	96	0.00	7.53
			AvgRF	CCRF	%Dev			
20		Methyl Tert Butyl Ether	1.049	1.018	3.0	98	0.00	7.57
			Amount	Calc.	%Drift			
21		Acetonitrile	400.000	373.757	6.6	99	0.00	7.91
			AvgRF	CCRF	%Dev			
22		Di-isopropyl ether	1.589	1.584	0.3	98	0.00	7.99
23		Chloroprene	0.653	0.648	0.8	100	0.00	8.20
24	P	1,1-Dichloroethane	0.731	0.687	6.0	97	0.00	8.23
25		Acrylonitrile	0.177	0.171	3.4	99	0.00	8.28
26		ETBE	1.362	1.356	0.4	96	0.00	8.44

Continuing Calibration Summary

Job Number: F78009
Account: TETTNOAK Tetra Tech, Inc
Project: Holloman AFB; Alamogordo, NM

Sample: VF1353-CC1349
Lab FileID: F046110.D

27		Vinyl acetate	0.935	0.991	-6.0	100	0.00	8.45
28		cis-1,2-Dichloroethene	0.383	0.386	-0.8	104	0.00	8.88
29		2,2-Dichloropropane	0.531	0.517	2.6	100	0.00	9.03
30		Bromochloromethane	0.215	0.223	-3.7	102	0.00	9.12
		----------	Amount	Calc.	%Drift	----------		
31		Cyclohexane	40.000	34.123	14.7	91	0.00	9.17
		----------	AvgRF	CCRF	%Dev	----------		
32	C	Chloroform	0.690	0.671	2.8	100	0.00	9.16
33		Ethyl acetate	0.580	0.519	10.5	87	0.00	9.22
		----------	Amount	Calc.	%Drift	----------		
34		Tetrahydrofuran	40.000	31.513	21.2#	91	0.00	9.38
		----------	AvgRF	CCRF	%Dev	----------		
35	S	Dibromofluoromethane	0.294	0.300	-2.0	104	0.00	9.38
36		Carbon Tetrachloride	0.606	0.579	4.5	98	0.00	9.39
37		1,1,1-Trichloroethane	0.582	0.578	0.7	100	0.00	9.46
38		2-Butanone	0.315	0.302	4.1	96	0.00	9.49
39		1,1-Dichloropropene	0.457	0.456	0.2	97	0.00	9.58
40		Propionitrile	0.065	0.064	1.5	98	0.00	9.85
41		Methacrylonitrile	0.382	0.381	0.3	97	0.00	9.88
42		Benzene	1.465	1.423	2.9	99	0.00	9.87
43		TAME	1.114	1.105	0.8	98	0.00	9.92
44	S	1,2-Dichloroethane-d4	0.346	0.334	3.5	97	0.00	10.01
45		1,2-Dichloroethane	0.624	0.607	2.7	99	0.00	10.08
46		Trichloroethene	0.383	0.377	1.6	101	0.00	10.50
47		Methylcyclohexane	0.404	0.393	2.7	94	0.00	10.53
48		Dibromomethane	0.254	0.247	2.8	102	0.00	10.98
49	C	1,2-Dichloropropane	0.383	0.372	2.9	95	0.00	11.08
50		Bromodichloromethane	0.491	0.476	3.1	99	0.00	11.12
		----------	Amount	Calc.	%Drift	----------		
51		Methyl methacrylate	40.000	33.199	17.0	90	0.00	11.19
52		2-Chloroethyl vinyl ether	200.000	186.894	6.6	103	0.00	11.66
		----------	AvgRF	CCRF	%Dev	----------		
53		cis-1,3-Dichloropropene	0.589	0.580	1.5	96	0.00	11.79
54	I	Chlorobenzene-d5	1.000	1.000	0.0	101	0.00	13.71
55	S	Toluene-d8	1.103	1.091	1.1	101	0.00	12.00
56	C	Toluene	1.762	1.684	4.4	97	0.00	12.06
57		2-Nitropropane	0.135	0.120	11.1	84	0.00	12.30
58		4-Methyl-2-pentanone	0.598	0.600	-0.3	96	0.00	12.40
59		trans-1,3-Dichloropropene	0.615	0.607	1.3	97	0.00	12.47
60		Tetrachloroethene	0.443	0.410	7.4	97	0.00	12.51
		----------	Amount	Calc.	%Drift	----------		
61		Ethyl methacrylate	40.000	34.670	13.3	94	0.00	12.55
		----------	AvgRF	CCRF	%Dev	----------		
62		1,1,2-Trichloroethane	0.337	0.324	3.9	99	0.00	12.66
63		Dibromochloromethane	0.465	0.459	1.3	99	0.00	12.88
64		1,3-Dichloropropane	0.659	0.636	3.5	99	0.00	12.98
65		1,2-Dibromoethane	0.404	0.390	3.5	96	0.00	13.19
66		2-hexanone	0.522	0.557	-6.7	100	0.00	13.29
67		1-Chlorohexane	0.488	0.496	-1.6	94	0.00	13.62
68	C	Ethylbenzene	2.067	2.021	2.2	98	0.00	13.70
69	P	Chlorobenzene	1.299	1.211	6.8	96	0.00	13.72

Continuing Calibration Summary

Job Number: F78009
Account: TETTNOAK Tetra Tech, Inc
Project: Holloman AFB; Alamogordo, NM

Sample: VF1353-CC1349
Lab FileID: F046110.D

70		1,1,1,2-Tetrachloroethane	0.491	0.479	2.4	100	0.00	13.77
71		m,p-Xylene	1.547	1.581	-2.2	98	0.00	13.84
		----------	Amount	Calc.	%Drift		----------	
72		o-Xylene	40.000	36.902	7.7	97	0.00	14.32
73		Styrene	40.000	37.447	6.4	100	0.00	14.37
		----------	AvgRF	CCRF	%Dev		----------	
74	P	Bromoform	0.310	0.299	3.5	94	0.00	14.46
		----------	Amount	Calc.	%Drift		----------	
75		Isopropylbenzene	40.000	37.144	7.1	97	0.00	14.64
		----------	AvgRF	CCRF	%Dev		----------	
76	I	1,4-Dichlorobenzene-d4	1.000	1.000	0.0	103	0.00	16.20
77	S	4-Bromofluorobenzene	0.856	0.853	0.4	103	0.00	14.99
		----------	Amount	Calc.	%Drift		----------	
78		cis-1,4-Dichloro-2-butene	40.000	40.679	-1.7	123	0.00	15.01
		----------	AvgRF	CCRF	%Dev		----------	
79		n-Propylbenzene	3.873	3.789	2.2	99	0.00	15.08
80		Bromobenzene	1.012	0.955	5.6	99	0.00	15.14
81	P	1,1,2,2-Tetrachloroethane	0.990	0.937	5.4	97	0.00	15.14
		----------	Amount	Calc.	%Drift		----------	
82		1,3,5-Trimethylbenzene	40.000	36.886	7.8	99	0.00	15.26
		----------	AvgRF	CCRF	%Dev		----------	
83		2-Chlorotoluene	2.617	2.600	0.6	99	0.00	15.30
		----------	Amount	Calc.	%Drift		----------	
84		trans-1,4-Dichloro-2-Bute	40.000	41.314	-3.3	121	0.00	15.34
		----------	AvgRF	CCRF	%Dev		----------	
85		1,2,3-Trichloropropane	0.271	0.259	4.4	95	0.00	15.33
		----------	Amount	Calc.	%Drift		----------	
86		Cyclohexanone	200.000	185.801	7.1	108	0.00	15.43
		----------	AvgRF	CCRF	%Dev		----------	
87		4-Chlorotoluene	2.547	2.577	-1.2	98	0.00	15.48
88		tert-Butylbenzene	1.496	1.475	1.4	94	0.00	15.64
89		1,2,4-Trimethylbenzene	2.856	2.808	1.7	102	0.00	15.70
90		Pentachloroethane	0.574	0.570	0.7	106	0.00	15.70
91		sec-Butylbenzene	2.866	2.815	1.8	95	0.00	15.82
92		4-Isopropyltoluene	2.398	2.409	-0.5	96	0.00	15.95
93		1,3-Dichlorobenzene	1.839	1.794	2.4	101	0.00	16.13
94		1,4-Dichlorobenzene	2.026	1.890	6.7	102	0.00	16.22
		----------	Amount	Calc.	%Drift		----------	
95		n-Butylbenzene	40.000	32.181	19.5	86	0.00	16.42
		----------	AvgRF	CCRF	%Dev		----------	
96		Benzyl Chloride	0.409	0.417	-2.0	100	0.00	16.46
97		1,2-Dichlorobenzene	1.897	1.807	4.7	99	0.00	16.69
98		1,2-Dibromo-3-Chloropropa	0.189	0.175	7.4	99	0.00	17.52
		----------	Amount	Calc.	%Drift		----------	

Continuing Calibration Summary

Job Number: F78009
Account: TETTNOAK Tetra Tech, Inc
Project: Holloman AFB; Alamogordo, NM

Sample: VF1353-CC1349
Lab FileID: F046110.D

99	Hexachlorobutadiene	40.000	39.654	0.9	99	0.00	18.18
100	1,2,4-Trichlorobenzene	40.000	39.569	1.1	100	0.00	18.26
	----------	AvgRF	CCRF	%Dev	----------		
101	Naphthalene	2.944	2.716	7.7	99	0.00	18.64
	----------	Amount	Calc.	%Drift	----------		
102	1,2,3-Trichlorobenzene	40.000	39.463	1.3	102	0.00	18.87
	----------	AvgRF	CCRF	%Dev	----------		
103 I	Tert Butyl Alcohol-d10	1.000	1.000	0.0	103	0.02	7.53
	----------	Amount	Calc.	%Drift	----------		
104	Ethanol	800.000	709.556	11.3	93	0.02	6.33
105	Acrolein	200.000	198.292	0.9	107	0.00	6.93
	----------	AvgRF	CCRF	%Dev	----------		
106	Tert butyl alcohol	1.723	1.527	11.4	102	0.00	7.61
	----------	Amount	Calc.	%Drift	----------		
107	Isobutyl alcohol	800.000	509.467	36.3#	63	0.00	9.93
	----------	AvgRF	CCRF	%Dev	----------		
108	Tert Amyl Alcohol	1.388	1.218	12.2	96	0.00	10.06
	----------	Amount	Calc.	%Drift	----------		
109	1,4-Dioxane	800.000	847.897	-6.0	122	0.00	11.31

(#) = Out of Range SPCC's out = 0 CCC's out = 0
F046040.D 8260FW.M Tue Nov 30 15:48:20 2010

Initial Calibration Summary

Job Number: F78009
Account: TETTNOAK Tetra Tech, Inc
Project: Holloman AFB; Alamogordo, NM

Sample: VG2573-ICC2573
Lab FileID: G0068162.D

Response Factor Report MSVOA1

Method : C:\MSDCHEM\1\METHODS\APP9-G.M (RTE Integrator)
Title : SW-846 Method 5035A/8260B
Last Update : Tue Nov 09 13:05:46 2010
Response via : Initial Calibration

Calibration Files
1 =G0068159.D 2 =G0068160.D 3 =G0068161.D 4 =G0068162.D
5 =G0068163.D 6 =G0068164.D

		Compound	1	2	3	4	5	6	Avg	%RSD
1)	I	Fluorobenzene	----------ISTD----------							
2)		Dichlorodifluoromet	0.517	0.513	0.519	0.562	0.425	0.593	0.522	10.90
3)	P	Chloromethane	0.610	0.617	0.592	0.643	0.605	0.663	0.622	4.25
4)	C	Vinyl Chloride	0.424	0.457	0.469	0.545	0.485	0.532	0.485	9.44
5)		Bromomethane	0.236	0.187	0.141	0.132	0.115	0.118	0.155	30.64
		---- Linear regr., Force(0,0) ---- Coefficient = 0.9953								
		Response Ratio = 0.00000 + 0.12006 *A								
6)		Chloroethane	0.230	0.170	0.154	0.158	0.129	0.139	0.163	21.93
		---- Linear regr., Force(0,0) ---- Coefficient = 0.9908								
		Response Ratio = 0.00000 + 0.13926 *A								
7)		Trichlorofluorometh	0.540	0.496	0.450	0.486	0.412	0.474	0.476	9.10
8)		Ethyl Ether	0.251	0.260	0.254	0.252	0.241	0.253	0.252	2.43
9)		1,2-Dichlorotrifluo	0.503	0.482	0.451	0.524	0.470	0.517	0.491	5.74
10)	C	1,1-Dichloroethene	0.724	0.726	0.700	0.806	0.716	0.788	0.743	5.79
11)		Freon 113	0.353	0.354	0.338	0.394	0.338	0.385	0.360	6.60
12)		Carbon Disulfide	0.921	0.975	0.995	1.141	1.013	1.146	1.032	8.89
13)		Iodomethane	0.691	0.722	0.720	0.816	0.727	0.781	0.743	6.24
14)		Allyl chloride	0.605	0.638	0.656	0.784	0.720	0.790	0.699	11.17
15)		Methylene Chloride	0.894	0.728	0.695	0.790	0.695	0.734	0.756	10.06
16)		Acetone	0.293	0.328	0.336	0.298	0.283	0.267	0.301	8.86
17)		Methyl acetate	0.259	0.311	0.333	0.326	0.286	0.280	0.299	9.60
18)		trans-1,2-Dichloroe	0.740	0.701	0.729	0.827	0.745	0.785	0.754	5.93
19)		Hexane	0.287	0.319	0.299	0.375	0.341	0.358	0.330	10.39
20)		Methyl Tert Butyl E	1.217	1.274	1.297	1.300	1.219	1.179	1.248	3.99
21)		Acetonitrile	0.037	0.039	0.045	0.043	0.042	0.040	0.041	6.84
22)		Di-isopropyl ether	1.474	1.665	1.681	1.956	1.803	1.865	1.741	9.83
23)		Chloroprene	0.719	0.726	0.750	0.924	0.790	0.856	0.794	10.22
24)	P	1,1-Dichloroethane	0.840	0.881	0.884	1.013	0.902	0.941	0.910	6.62
25)		Acrylonitrile	0.122	0.168	0.177	0.166	0.165	0.156	0.159	12.10
26)		ETBE	1.437	1.567	1.625	1.744	1.594	1.571	1.590	6.23
27)		Vinyl acetate	0.946	1.152	1.212	1.171	1.135	1.081	1.116	8.42
28)		cis-1,2-Dichloroeth	0.396	0.408	0.411	0.467	0.423	0.444	0.425	6.18
29)		2,2-Dichloropropane	0.454	0.483	0.456	0.538	0.457	0.471	0.477	6.77
30)		Bromochloromethane	0.257	0.258	0.252	0.278	0.254	0.249	0.258	3.98
31)		Cyclohexane	0.640	0.662	0.661	0.794	0.701	0.746	0.701	8.42
32)	C	Chloroform	0.889	0.897	0.903	1.022	0.923	0.927	0.927	5.29
33)		Ethyl acetate	0.482	0.603	0.636	0.594	0.568	0.529	0.569	9.74
34)		Tetrahydrofuran	0.191	0.154	0.147	0.135	0.130	0.116	0.146	17.79
		---- Linear regr., Force(0,0) ---- Coefficient = 0.9908								
		Response Ratio = 0.00000 + 0.12424 *A								
35)	S	Dibromofluoromethan	0.354	0.341	0.371	0.340	0.330	0.322	0.343	5.11
36)		Carbon Tetrachlorid	0.677	0.720	0.694	0.804	0.723	0.745	0.727	6.12
37)		1,1,1-Trichloroetha	0.636	0.705	0.652	0.768	0.677	0.703	0.690	6.81

Initial Calibration Summary

Job Number: F78009
Account: TETTNOAK Tetra Tech, Inc
Project: Holloman AFB; Alamogordo, NM

Sample: VG2573-ICC2573
Lab FileID: G0068162.D

38)		2-Butanone	0.245	0.304	0.321	0.292	0.283	0.262	0.284	9.73
39)		1,1-Dichloropropene	0.563	0.614	0.601	0.702	0.618	0.655	0.625	7.64
40)		Propionitrile	0.045	0.056	0.055	0.049	0.046	0.043	0.049	11.17
41)		Methacrylonitrile	0.290	0.348	0.352	0.331	0.302	0.283	0.318	9.46
42)		Benzene	1.449	1.501	1.459	1.661	1.462	1.493	1.504	5.29
43)		TAME	1.110	1.215	1.207	1.261	1.130	1.090	1.169	5.82
44)	S	1,2-Dichloroethane-	0.463	0.457	0.487	0.406	0.401	0.383	0.433	9.59
45)		1,2-Dichloroethane	0.738	0.812	0.843	0.883	0.784	0.790	0.808	6.25
46)		Trichloroethene	0.406	0.445	0.442	0.498	0.444	0.460	0.449	6.69
47)		Methylcyclohexane	0.500	0.568	0.545	0.659	0.574	0.625	0.579	9.82
48)		Dibromomethane	0.275	0.313	0.320	0.353	0.318	0.329	0.318	7.93
49)	C	1,2-Dichloropropane	0.406	0.455	0.453	0.517	0.476	0.510	0.469	8.78
50)		Bromodichloromethan	0.600	0.680	0.678	0.782	0.706	0.741	0.698	8.91
51)		Methyl methacrylate	0.283	0.414	0.474	0.465	0.432	0.435	0.417	16.59
		---- Linear regr., Force(0,0) ---- Coefficient = 0.9979								
		Response Ratio = 0.00000 + 0.43906 *A								
52)		2-Chloroethyl vinyl	0.120	0.168	0.173	0.186	0.175	0.178	0.167	14.21
53)		cis-1,3-Dichloropro	0.573	0.719	0.707	0.816	0.750	0.788	0.726	11.77
54)	I	Chlorobenzene-d5	----------ISTD----------							
55)	S	Toluene-d8	1.280	1.315	1.335	1.438	1.515	1.625	1.418	9.41
56)	C	Toluene	1.723	2.039	1.953	2.406	2.274	2.528	2.154	14.04
57)		2-Nitropropane	0.135	0.205	0.224	0.232	0.233	0.239	0.211	18.67
		---- Linear regr., Force(0,0) ---- Coefficient = 0.9997								
		Response Ratio = 0.00000 + 0.23593 *A								
58)		4-Methyl-2-pentanon	0.445	0.616	0.642	0.650	0.671	0.666	0.615	13.91
59)		trans-1,3-Dichlorop	0.581	0.746	0.789	0.909	0.888	0.945	0.810	16.63
		---- Linear regr., Force(0,0) ---- Coefficient = 0.9979								
		Response Ratio = 0.00000 + 0.91657 *A								
60)		Tetrachloroethene	0.564	0.597	0.591	0.710	0.636	0.710	0.635	9.90
61)		Ethyl methacrylate	0.490	0.624	0.635	0.712	0.714	0.739	0.652	14.11
62)		1,1,2-Trichloroetha	0.397	0.407	0.394	0.448	0.439	0.462	0.424	6.79
63)		Dibromochloromethan	0.514	0.635	0.659	0.766	0.734	0.780	0.681	14.73
64)		1,3-Dichloropropane	0.752	0.786	0.822	0.919	0.875	0.930	0.847	8.58
65)		1,2-Dibromoethane	0.407	0.497	0.507	0.606	0.569	0.604	0.532	14.44
66)		2-hexanone	0.352	0.481	0.532	0.525	0.551	0.538	0.497	15.01
		---- Linear regr., Force(0,0) ---- Coefficient = 0.9995								
		Response Ratio = 0.00000 + 0.53971 *A								
67)		1-Chlorohexane	0.487	0.631	0.657	0.830	0.771	0.859	0.706	19.93
		---- Linear regr., Force(0,0) ---- Coefficient = 0.9940								
		Response Ratio = 0.00000 + 0.82105 *A								
68)	C	Ethylbenzene	1.725	2.213	2.180	2.667	2.394	2.570	2.291	14.72
69)	P	Chlorobenzene	1.080	1.257	1.216	1.477	1.321	1.377	1.288	10.64
70)		1,1,1,2-Tetrachloro	0.435	0.546	0.528	0.628	0.577	0.591	0.551	12.12
71)		m,p-Xylene	1.545	1.837	1.750	2.032	1.754	1.791	1.785	8.81
72)		o-Xylene	1.604	1.927	1.920	2.311	2.142	2.280	2.030	13.18
73)		Styrene	0.991	1.235	1.271	1.552	1.441	1.525	1.336	15.94
		---- Linear regr., Force(0,0) ---- Coefficient = 0.9971								
		Response Ratio = 0.00000 + 1.49321 *A								
74)	P	Bromoform	0.349	0.419	0.468	0.525	0.500	0.519	0.463	14.72
75)		Isopropylbenzene	1.419	1.767	1.755	2.180	1.936	2.089	1.858	14.73
76)	I	1,4-Dichlorobenzene-d	----------ISTD----------							
77)	S	4-Bromofluorobenzen	0.936	0.929	0.954	1.018	1.065	1.100	1.001	7.18

Initial Calibration Summary

Job Number: F78009
Account: TETTNOAK Tetra Tech, Inc
Project: Holloman AFB; Alamogordo, NM

Sample: VG2573-ICC2573
Lab FileID: G0068162.D

```
 78)     cis-1,4-Dichloro-2- 0.319 0.426 0.414 0.491 0.477 0.515 0.441  16.10
             ---- Linear regr., Force(0,0) ----  Coefficient =  0.9968
               Response Ratio = 0.00000 + 0.49673 *A

 79)     n-Propylbenzene     3.956 4.679 4.411 5.562 5.298 5.535 4.907  13.45
 80)     Bromobenzene        1.053 1.180 1.079 1.296 1.206 1.241 1.176   7.97
 81) P   1,1,2,2-Tetrachloro 0.919 1.111 1.031 1.093 1.088 1.068 1.052   6.72
 82)     1,3,5-Trimethylbenz 2.788 3.406 3.190 3.833 3.524 3.612 3.392  10.76
 83)     2-Chlorotoluene     3.285 3.473 3.310 3.910 3.600 3.671 3.541   6.69
 84)     trans-1,4-Dichloro- 0.255 0.330 0.321 0.382 0.366 0.359 0.336  13.58
 85)     1,2,3-Trichloroprop 0.236 0.281 0.275 0.283 0.271 0.265 0.268   6.38
 86)     Cyclohexanone       0.030 0.045 0.040 0.040 0.043 0.039 0.039  12.77
 87)     4-Chlorotoluene     2.717 2.848 2.815 3.412 3.229 3.319 3.057   9.73
 88)     tert-Butylbenzene   2.247 2.345 2.113 2.617 2.379 2.413 2.352   7.20
 89)     1,2,4-Trimethylbenz 2.845 3.232 3.013 3.418 3.133 3.145 3.131   6.20
 90)     Pentachloroethane   0.710 0.700 0.664 0.751 0.630 0.622 0.679   7.35
 91)     sec-Butylbenzene    3.290 3.960 3.548 4.306 3.949 4.015 3.845   9.46
 92)     4-Isopropyltoluene  2.350 3.034 2.777 3.360 3.087 3.115 2.954  11.83
 93)     1,3-Dichlorobenzene 1.633 1.813 1.744 2.037 1.930 1.992 1.858   8.38
 94)     1,4-Dichlorobenzene 1.647 1.747 1.688 1.954 1.880 1.914 1.805   7.08
 95)     n-Butylbenzene      1.172 1.642 1.582 1.905 1.890 1.958 1.692  17.54
             ---- Linear regr., Force(0,0) ----  Coefficient =  0.9984
               Response Ratio = 0.00000 + 1.91654 *A

 96)     Benzyl Chloride     0.230 0.300 0.293 0.325 0.326 0.331 0.301  12.60
 97)     1,2-Dichlorobenzene 1.513 1.694 1.623 1.922 1.845 1.926 1.754   9.70
 98)     1,2-Dibromo-3-Chlor 0.185 0.199 0.201 0.208 0.233 0.233 0.210   9.25
 99)     Hexachlorobutadiene 0.485 0.716 0.705 0.800 0.885 0.940 0.755  21.38
             ---- Linear regr., Force(0,0) ----  Coefficient =  0.9944
               Response Ratio = 0.00000 + 0.89602 *A

100)     1,2,4-Trichlorobenz 0.483 0.859 0.939 1.032 1.172 1.183 0.944  27.48
             ---- Linear regr., Force(0,0) ----  Coefficient =  0.9964
               Response Ratio = 0.00000 + 1.14966 *A

101)     Naphthalene         0.739 1.507 1.676 1.789 2.016 1.888 1.602  28.56
             ---- Linear regr., Force(0,0) ----  Coefficient =  0.9963
               Response Ratio = 0.00000 + 1.90331 *A

102)     1,2,3-Trichlorobenz 0.375 0.722 0.786 0.815 0.920 0.858 0.746  25.95
             ---- Linear regr., Force(0,0) ----  Coefficient =  0.9961
               Response Ratio = 0.00000 + 0.86726 *A


103) I   Tert Butyl Alcohol-d1 ----------------ISTD---------------------
104)     Ethanol             0.240 0.197 0.212 0.184 0.171 0.173 0.196  13.33
105)     Acrolein            1.101 1.021 1.172 1.409 1.182 1.104 1.165  11.42
106)     Tert Butyl Alcohol  1.817 1.571 1.787 1.919 1.775 1.633 1.750   7.25
107)     Isobutyl alcohol    0.234 0.371 0.412 0.494 0.457 0.415 0.397  22.76
             ---- Quadratic regr., Force(0,0) ----  Coefficient =  0.9955
               Response Ratio = 0.00000 + 0.51311 *A + -0.00570 *A^2

108)     Tert Amyl Alcohol   1.103 1.122 1.263 1.433 1.298 1.211 1.238   9.86
109)     1,4-Dioxane         0.160 0.144 0.147 0.171 0.138 0.140 0.150   8.39
 ------------------------------------------------------------------------------
 (#) = Out of Range

           APP9-G.M          Tue Nov 09 15:10:09 2010
```

Initial Calibration Verification

Job Number: F78009
Account: TETTNOAK Tetra Tech, Inc
Project: Holloman AFB; Alamogordo, NM

Sample: VG2573-ICV2573
Lab FileID: G0068165.D

Evaluate Continuing Calibration Report

```
Data File : G:\HPCHEM\1\DATA\110910\G0068165.D          Vial: 7
Acq On    :  9 Nov 2010  12:52 pm                    Operator: MikeM
Sample    : icv2573-3                                Inst    : MSVOA1
Misc      : ms15786,vg2573,5.00,,,,,                 Multiplr: 1.00
MS Integration Params: small.p

Method       : C:\MSDCHEM\1\METHODS\APP9-G.M (RTE Integrator)
Title        : SW-846 Method 5035A/8260B
Last Update  : Tue Nov 09 13:05:46 2010
Response via : Multiple Level Calibration

Min. RRF     :   0.001  Min. Rel. Area :  50%  Max. R.T. Dev  0.50min
Max. RRF Dev :  20%     Max. Rel. Area : 200%
```

		Compound	AvgRF	CCRF	%Dev	Area%	Dev(min)	R.T.
1	I	Fluorobenzene	1.000	1.000	0.0	101	0.00	11.08
2		Dichlorodifluoromethane	0.522	0.532	-1.9	103	0.00	4.23
3	P	Chloromethane	0.622	0.653	-5.0	111	0.00	4.62
4	C	Vinyl Chloride	0.485	0.497	-2.5	107	0.00	4.81
		----------	Amount	Calc.	%Drift		----------	
5		Bromomethane	50.000	74.715	-49.4#	128	0.00	5.44
6		Chloroethane	50.000	67.730	-35.5#	124	0.01	5.71
		----------	AvgRF	CCRF	%Dev		----------	
7		Trichlorofluoromethane	0.476	0.485	-1.9	109	0.00	5.96
8		Ethyl Ether	0.252	0.278	-10.3	110	0.00	6.41
9		1,2-Dichlorotrifluoroetha	0.491	0.583	-18.7	130	0.00	6.75
10	C	1,1-Dichloroethene	0.743	0.754	-1.5	109	0.01	6.82
11		Freon 113	0.360	0.422	-17.2	126	0.00	6.85
12		Carbon Disulfide	1.032	1.180	-14.3	120	0.01	6.93
13		Iodomethane	0.743	0.844	-13.6	118	0.00	7.09
14		Allyl chloride	0.699	0.727	-4.0	112	0.00	7.50
15		Methylene Chloride	0.756	0.761	-0.7	110	0.00	7.71
16		Acetone	0.301	0.170	43.5#	51	0.01	7.73
17		Methyl acetate	0.299	0.327	-9.4	99	0.00	7.88
18		trans-1,2-Dichloroethene	0.754	0.814	-8.0	113	0.00	7.91
19		Hexane	0.330	0.445	-34.8#	150	0.00	7.99
20		Methyl Tert Butyl Ether	1.248	1.351	-8.3	105	0.00	8.02
21		Acetonitrile	0.041	0.039	4.9	89	0.01	8.42
22		Di-isopropyl ether	1.741	2.034	-16.8	122	0.00	8.51
23		Chloroprene	0.794	0.850	-7.1	114	0.00	8.73
24	P	1,1-Dichloroethane	0.910	0.971	-6.7	111	0.00	8.77
25		Acrylonitrile	0.159	0.202	-27.0#	115	0.00	8.83
26		ETBE	1.590	1.708	-7.4	106	0.00	9.00
27		Vinyl acetate	1.116	1.502	-34.6#	125	0.00	9.04
28		cis-1,2-Dichloroethene	0.425	0.473	-11.3	116	0.01	9.50
29		2,2-Dichloropropane	0.477	0.475	0.4	105	0.00	9.65
30		Bromochloromethane	0.258	0.264	-2.3	105	0.00	9.77
31		Cyclohexane	0.701	0.802	-14.4	122	0.00	9.80
32	C	Chloroform	0.927	1.019	-9.9	114	0.00	9.82
33		Ethyl acetate	0.569	0.383	32.7#	61	0.00	9.91
		----------	Amount	Calc.	%Drift		----------	
34		Tetrahydrofuran	50.000	58.722	-17.4	100	0.00	10.05
		----------	AvgRF	CCRF	%Dev		----------	

Initial Calibration Verification

Job Number: F78009
Account: TETTNOAK Tetra Tech, Inc
Project: Holloman AFB; Alamogordo, NM

Sample: VG2573-ICV2573
Lab FileID: G0068165.D

35	S	Dibromofluoromethane	0.343	0.352	-2.6	96	0.00	10.06
36		Carbon Tetrachloride	0.727	0.749	-3.0	109	0.00	10.05
37		1,1,1-Trichloroethane	0.690	0.699	-1.3	108	0.00	10.13
38		2-Butanone	0.284	0.225	20.8#	71	0.00	10.19
39		1,1-Dichloropropene	0.625	0.693	-10.9	116	0.00	10.28
40		Propionitrile	0.049	0.049	0.0	91	0.00	10.60
41		Methacrylonitrile	0.318	0.345	-8.5	99	0.00	10.62
42		Benzene	1.504	1.671	-11.1	115	0.00	10.59
43		TAME	1.169	1.327	-13.5	111	0.00	10.65
44	S	1,2-Dichloroethane-d4	0.433	0.457	-5.5	95	0.00	10.75
45		1,2-Dichloroethane	0.808	0.886	-9.7	106	0.00	10.83
46		Trichloroethene	0.449	0.517	-15.1	118	0.01	11.29
47		Methylcyclohexane	0.579	0.712	-23.0#	132	0.00	11.30
48		Dibromomethane	0.318	0.358	-12.6	113	0.01	11.81
49	C	1,2-Dichloropropane	0.469	0.535	-14.1	119	0.00	11.91
50		Bromodichloromethane	0.698	0.773	-10.7	115	0.00	11.95
		----------	Amount	Calc.	%Drift	----------		
51		Methyl methacrylate	50.000	57.767	-15.5	108	0.00	12.04
		----------	AvgRF	CCRF	%Dev	----------		
52		2-Chloroethyl vinyl ether	0.167	0.193	-15.6	113	0.00	12.54
53		cis-1,3-Dichloropropene	0.726	0.839	-15.6	120	0.01	12.67
54	I	Chlorobenzene-d5	1.000	1.000	0.0	97	0.00	14.64
55	S	Toluene-d8	1.418	1.421	-0.2	103	0.00	12.88
56	C	Toluene	2.154	2.315	-7.5	115	0.00	12.94
		----------	Amount	Calc.	%Drift	----------		
57		2-Nitropropane	250.000	232.082	7.2	95	0.00	13.21
		----------	AvgRF	CCRF	%Dev	----------		
58		4-Methyl-2-pentanone	0.615	0.649	-5.5	98	0.00	13.32
		----------	Amount	Calc.	%Drift	----------		
59		trans-1,3-Dichloropropene	50.000	51.580	-3.2	116	0.00	13.38
		----------	AvgRF	CCRF	%Dev	----------		
60		Tetrachloroethene	0.635	0.737	-16.1	121	0.01	13.41
61		Ethyl methacrylate	0.652	0.690	-5.8	106	0.00	13.47
62		1,1,2-Trichloroethane	0.424	0.461	-8.7	114	0.00	13.58
63		Dibromochloromethane	0.681	0.709	-4.1	104	0.00	13.81
64		1,3-Dichloropropane	0.847	0.892	-5.3	105	0.00	13.91
65		1,2-Dibromoethane	0.532	0.541	-1.7	104	0.01	14.12
		----------	Amount	Calc.	%Drift	----------		
66		2-hexanone	250.000	201.033	19.6	79	0.00	14.23
67		1-Chlorohexane	50.000	45.011	10.0	109	0.00	14.56
		----------	AvgRF	CCRF	%Dev	----------		
68	C	Ethylbenzene	2.291	2.468	-7.7	110	0.00	14.64
69	P	Chlorobenzene	1.288	1.407	-9.2	112	0.00	14.66
70		1,1,1,2-Tetrachloroethane	0.551	0.574	-4.2	106	0.00	14.71
71		m,p-Xylene	1.785	1.996	-11.8	111	0.00	14.78
72		o-Xylene	2.030	2.238	-10.2	113	0.01	15.27
		----------	Amount	Calc.	%Drift	----------		
73		Styrene	50.000	50.269	-0.5	115	0.00	15.31
		----------	AvgRF	CCRF	%Dev	----------		

Initial Calibration Verification

Job Number: F78009
Account: TETTNOAK Tetra Tech, Inc
Project: Holloman AFB; Alamogordo, NM

Sample: VG2573-ICV2573
Lab FileID: G0068165.D

74	P	Bromoform	0.463	0.494	-6.7	103	0.00	15.39
75		Isopropylbenzene	1.858	2.264	-21.9#	125	0.00	15.56
76	I	1,4-Dichlorobenzene-d4	1.000	1.000	0.0	87	0.00	16.92
77	S	4-Bromofluorobenzene	1.001	0.982	1.9	90	0.00	15.89
		----------	Amount	Calc.	%Drift	----------		
78		cis-1,4-Dichloro-2-butene	50.000	50.569	-1.1	106	0.00	15.91
		----------	AvgRF	CCRF	%Dev	----------		
79		n-Propylbenzene	4.907	5.706	-16.3	113	0.01	15.96
80		Bromobenzene	1.176	1.333	-13.4	108	0.00	16.01
81	P	1,1,2,2-Tetrachloroethane	1.052	1.188	-12.9	100	0.00	16.02
82		1,3,5-Trimethylbenzene	3.392	3.928	-15.8	107	0.00	16.12
83		2-Chlorotoluene	3.541	4.095	-15.6	108	0.00	16.16
84		trans-1,4-Dichloro-2-Bute	0.336	0.368	-9.5	100	0.00	16.19
85		1,2,3-Trichloropropane	0.268	0.292	-9.0	93	0.00	16.19
86		Cyclohexanone	0.039	0.052	-33.3#	115	0.00	16.27
87		4-Chlorotoluene	3.057	3.600	-17.8	111	0.00	16.31
88		tert-Butylbenzene	2.352	2.688	-14.3	111	0.00	16.44
89		1,2,4-Trimethylbenzene	3.131	3.773	-20.5#	109	0.00	16.50
90		Pentachloroethane	0.679	0.737	-8.5	97	0.00	16.51
91		sec-Butylbenzene	3.845	4.602	-19.7	113	0.00	16.60
92		4-Isopropyltoluene	2.954	3.529	-19.5	111	0.00	16.70
93		1,3-Dichlorobenzene	1.858	2.146	-15.5	107	0.00	16.86
94		1,4-Dichlorobenzene	1.805	2.063	-14.3	106	0.00	16.94
		----------	Amount	Calc.	%Drift	----------		
95		n-Butylbenzene	50.000	52.257	-4.5	110	0.00	17.10
		----------	AvgRF	CCRF	%Dev	----------		
96		Benzyl Chloride	0.301	0.312	-3.7	93	0.01	17.15
97		1,2-Dichlorobenzene	1.754	1.977	-12.7	106	0.00	17.33
98		1,2-Dibromo-3-Chloropropa	0.210	0.225	-7.1	97	0.00	18.07
		----------	Amount	Calc.	%Drift	----------		
99		Hexachlorobutadiene	50.000	51.376	-2.8	114	0.00	18.63
100		1,2,4-Trichlorobenzene	50.000	49.812	0.4	106	0.01	18.72
101		Naphthalene	50.000	47.511	5.0	94	0.00	19.06
102		1,2,3-Trichlorobenzene	50.000	50.962	-1.9	98	0.00	19.26
		----------	AvgRF	CCRF	%Dev	----------		
103	I	Tert Butyl Alcohol-d10	1.000	1.000	0.0	89	0.01	8.00
104		Ethanol	0.196	0.195	0.5	82	0.00	6.63
105		Acrolein	1.165	1.627	-39.7#	123	0.00	7.31
106		Tert Butyl Alcohol	1.750	1.632	6.7	81	0.00	8.09
		----------	Amount	Calc.	%Drift	----------		
107		Isobutyl alcohol	1000.000	907.724	9.2	96	0.01	10.69
		----------	AvgRF	CCRF	%Dev	----------		
108		Tert Amyl Alcohol	1.238	1.328	-7.3	93	0.00	10.83
109		1,4-Dioxane	0.150	0.153	-2.0	92	0.01	12.17

(#) = Out of Range SPCC's out = 0 CCC's out = 0
G0068161.D APP9-G.M Wed Nov 10 14:32:43 2010

Continuing Calibration Summary

Job Number: F78009
Account: TETTNOAK Tetra Tech, Inc
Project: Holloman AFB; Alamogordo, NM

Sample: VG2581-CC2573
Lab FileID: G0068548.D

Evaluate Continuing Calibration Report

```
Data File : G:\HPCHEM\1\DATA\111810\G0068548.D          Vial: 1
Acq On    : 18 Nov 2010   9:43 am                   Operator: MikeM
Sample    : cc2573-4                                Inst    : MSVOA1
Misc      : ms15883,vg2581,5.00,,,,,                Multiplr: 1.00
MS Integration Params: small.p

Method       : C:\MSDCHEM\1\METHODS\APP9-G.M (RTE Integrator)
Title        : SW-846 Method 5035A/8260B
Last Update  : Tue Nov 09 13:05:46 2010
Response via : Multiple Level Calibration

Min. RRF     :   0.001  Min. Rel. Area :  50%  Max. R.T. Dev  0.50min
Max. RRF Dev :  20%     Max. Rel. Area : 200%
```

		Compound	AvgRF	CCRF	%Dev	Area%	Dev(min)	R.T.
1	I	Fluorobenzene	1.000	1.000	0.0	74	0.00	11.07
2		Dichlorodifluoromethane	0.522	0.525	-0.6	69	-0.04	4.20
3	P	Chloromethane	0.622	0.557	10.5	64	-0.01	4.60
4	C	Vinyl Chloride	0.485	0.508	-4.7	69	-0.02	4.80
		----------	Amount	Calc.	%Drift		----------	
5		Bromomethane	100.000	118.313	-18.3	79	-0.01	5.43
6		Chloroethane	100.000	118.965	-19.0	77	-0.02	5.68
		----------	AvgRF	CCRF	%Dev		----------	
7		Trichlorofluoromethane	0.476	0.536	-12.6	81	-0.02	5.93
8		Ethyl Ether	0.252	0.262	-4.0	76	-0.01	6.39
9		1,2-Dichlorotrifluoroetha	0.491	0.559	-13.8	79	-0.01	6.74
10	C	1,1-Dichloroethene	0.743	0.818	-10.1	75	0.00	6.81
11		Freon 113	0.360	0.456	-26.7#	85	-0.01	6.85
12		Carbon Disulfide	1.032	1.180	-14.3	76	-0.01	6.91
13		Iodomethane	0.743	0.837	-12.7	75	-0.01	7.07
14		Allyl chloride	0.699	0.811	-16.0	76	0.00	7.50
15		Methylene Chloride	0.756	0.755	0.1	70	-0.01	7.69
16		Acetone	0.301	0.298	1.0	74	0.00	7.71
17		Methyl acetate	0.299	0.268	10.4	60	-0.01	7.86
18		trans-1,2-Dichloroethene	0.754	0.827	-9.7	74	-0.01	7.89
19		Hexane	0.330	0.422	-27.9#	83	0.00	7.98
20		Methyl Tert Butyl Ether	1.248	1.239	0.7	70	0.00	8.01
21		Acetonitrile	0.041	0.040	2.4	68	-0.01	8.39
22		Di-isopropyl ether	1.741	1.757	-0.9	66	0.00	8.50
23		Chloroprene	0.794	0.955	-20.3#	76	-0.01	8.72
24	P	1,1-Dichloroethane	0.910	0.971	-6.7	70	0.00	8.77
25		Acrylonitrile	0.159	0.098	38.4#	43#	0.00	8.83
26		ETBE	1.590	1.628	-2.4	69	0.00	9.00
27		Vinyl acetate	1.116	0.705	36.8#	44#	-0.01	9.02
28		cis-1,2-Dichloroethene	0.425	0.457	-7.5	72	0.00	9.49
29		2,2-Dichloropropane	0.477	0.520	-9.0	71	0.00	9.65
30		Bromochloromethane	0.258	0.276	-7.0	73	0.00	9.76
31		Cyclohexane	0.701	0.774	-10.4	72	0.00	9.79
32	C	Chloroform	0.927	1.005	-8.4	72	0.00	9.81
33		Ethyl acetate	0.569	0.244	57.1#	30#	0.00	9.90
		----------	Amount	Calc.	%Drift		----------	
34		Tetrahydrofuran	100.000	89.534	10.5	60	0.00	10.05
		----------	AvgRF	CCRF	%Dev		----------	

Continuing Calibration Summary

Job Number: F78009
Account: TETTNOAK Tetra Tech, Inc
Project: Holloman AFB; Alamogordo, NM

Sample: VG2581-CC2573
Lab FileID: G0068548.D

35	S	Dibromofluoromethane	0.343	0.365	-6.4	79	0.00	10.06
36		Carbon Tetrachloride	0.727	0.886	-21.9#	81	0.00	10.05
37		1,1,1-Trichloroethane	0.690	0.801	-16.1	77	0.00	10.13
38		2-Butanone	0.284	0.296	-4.2	75	0.00	10.19
39		1,1-Dichloropropene	0.625	0.693	-10.9	73	0.00	10.28
40		Propionitrile	0.049	0.050	-2.0	74	0.00	10.59
41		Methacrylonitrile	0.318	0.331	-4.1	74	0.00	10.61
42		Benzene	1.504	1.601	-6.4	71	0.00	10.59
43		TAME	1.169	1.186	-1.5	69	0.00	10.64
44	S	1,2-Dichloroethane-d4	0.433	0.431	0.5	78	0.00	10.75
45		1,2-Dichloroethane	0.808	0.857	-6.1	71	0.00	10.83
46		Trichloroethene	0.449	0.511	-13.8	75	0.00	11.28
47		Methylcyclohexane	0.579	0.673	-16.2	75	0.00	11.29
48		Dibromomethane	0.318	0.344	-8.2	72	0.00	11.80
49	C	1,2-Dichloropropane	0.469	0.481	-2.6	68	0.00	11.90
50		Bromodichloromethane	0.698	0.754	-8.0	71	0.00	11.95
		----------	Amount	Calc.	%Drift	----------		
51		Methyl methacrylate	100.000	102.313	-2.3	71	0.00	12.05
		----------	AvgRF	CCRF	%Dev	----------		
52		2-Chloroethyl vinyl ether	0.167	0.201	-20.4#	79	0.00	12.54
53		cis-1,3-Dichloropropene	0.726	0.783	-7.9	71	0.00	12.67
54	I	Chlorobenzene-d5	1.000	1.000	0.0	78	0.00	14.65
55	S	Toluene-d8	1.418	1.410	0.6	76	0.00	12.89
56	C	Toluene	2.154	2.243	-4.1	72	0.00	12.95
		----------	Amount	Calc.	%Drift	----------		
57		2-Nitropropane	500.000	452.487	9.5	72	0.00	13.21
		----------	AvgRF	CCRF	%Dev	----------		
58		4-Methyl-2-pentanone	0.615	0.612	0.5	73	0.00	13.31
		----------	Amount	Calc.	%Drift	----------		
59		trans-1,3-Dichloropropene	100.000	90.459	9.5	71	0.00	13.39
		----------	AvgRF	CCRF	%Dev	----------		
60		Tetrachloroethene	0.635	0.674	-6.1	74	0.00	13.41
61		Ethyl methacrylate	0.652	0.690	-5.8	75	0.00	13.48
62		1,1,2-Trichloroethane	0.424	0.398	6.1	69	0.00	13.59
63		Dibromochloromethane	0.681	0.721	-5.9	73	0.00	13.81
64		1,3-Dichloropropane	0.847	0.808	4.6	68	0.00	13.90
65		1,2-Dibromoethane	0.532	0.530	0.4	68	0.00	14.12
		----------	Amount	Calc.	%Drift	----------		
66		2-hexanone	500.000	507.231	-1.4	81	0.00	14.23
67		1-Chlorohexane	100.000	96.330	3.7	74	0.00	14.56
		----------	AvgRF	CCRF	%Dev	----------		
68	C	Ethylbenzene	2.291	2.477	-8.1	72	0.00	14.64
69	P	Chlorobenzene	1.288	1.346	-4.5	71	0.00	14.67
70		1,1,1,2-Tetrachloroethane	0.551	0.581	-5.4	72	0.00	14.71
71		m,p-Xylene	1.785	1.923	-7.7	73	0.00	14.79
72		o-Xylene	2.030	2.127	-4.8	71	0.00	15.26
		----------	Amount	Calc.	%Drift	----------		
73		Styrene	100.000	94.999	5.0	71	0.00	15.32
		----------	AvgRF	CCRF	%Dev	----------		

Continuing Calibration Summary

Job Number: F78009
Account: TETTNOAK Tetra Tech, Inc
Project: Holloman AFB; Alamogordo, NM

Sample: VG2581-CC2573
Lab FileID: G0068548.D

74	P	Bromoform	0.463	0.485	-4.8	72	0.00	15.40
75		Isopropylbenzene	1.858	2.011	-8.2	72	0.00	15.57
76	I	1,4-Dichlorobenzene-d4	1.000	1.000	0.0	76	0.00	16.93
77	S	4-Bromofluorobenzene	1.001	1.021	-2.0	76	0.00	15.89
		----------	Amount	Calc.	%Drift	----------		
78		cis-1,4-Dichloro-2-butene	100.000	99.782	0.2	77	0.00	15.91
		----------	AvgRF	CCRF	%Dev	----------		
79		n-Propylbenzene	4.907	5.363	-9.3	73	0.02	15.97
80		Bromobenzene	1.176	1.230	-4.6	72	0.00	16.02
81	P	1,1,2,2-Tetrachloroethane	1.052	0.984	6.5	69	0.00	16.03
82		1,3,5-Trimethylbenzene	3.392	3.677	-8.4	73	0.00	16.13
83		2-Chlorotoluene	3.541	3.709	-4.7	72	0.00	16.17
84		trans-1,4-Dichloro-2-Bute	0.336	0.350	-4.2	70	0.02	16.21
85		1,2,3-Trichloropropane	0.268	0.257	4.1	69	0.00	16.20
86		Cyclohexanone	0.039	0.022	43.6#	42#	0.00	16.28
87		4-Chlorotoluene	3.057	3.286	-7.5	73	0.00	16.31
88		tert-Butylbenzene	2.352	2.494	-6.0	73	0.00	16.44
89		1,2,4-Trimethylbenzene	3.131	3.336	-6.5	74	0.00	16.50
90		Pentachloroethane	0.679	0.779	-14.7	79	0.00	16.51
91		sec-Butylbenzene	3.845	4.163	-8.3	74	0.02	16.61
92		4-Isopropyltoluene	2.954	3.288	-11.3	75	0.00	16.71
93		1,3-Dichlorobenzene	1.858	1.980	-6.6	74	0.00	16.87
94		1,4-Dichlorobenzene	1.805	1.919	-6.3	75	0.00	16.94
		----------	Amount	Calc.	%Drift	----------		
95		n-Butylbenzene	100.000	99.963	0.0	77	0.00	17.10
		----------	AvgRF	CCRF	%Dev	----------		
96		Benzyl Chloride	0.301	0.318	-5.6	75	0.02	17.15
97		1,2-Dichlorobenzene	1.754	1.857	-5.9	74	0.02	17.35
98		1,2-Dibromo-3-Chloropropa	0.210	0.201	4.3	74	0.00	18.08
		----------	Amount	Calc.	%Drift	----------		
99		Hexachlorobutadiene	100.000	94.953	5.0	81	0.02	18.65
100		1,2,4-Trichlorobenzene	100.000	94.774	5.2	81	0.02	18.73
101		Naphthalene	100.000	90.545	9.5	73	0.00	19.06
102		1,2,3-Trichlorobenzene	100.000	97.076	2.9	79	0.02	19.27
		----------	AvgRF	CCRF	%Dev	----------		
103	I	Tert Butyl Alcohol-d10	1.000	1.000	0.0	80	-0.01	7.97
104		Ethanol	0.196	0.142	27.6#	61	-0.01	6.61
105		Acrolein	1.165	0.803	31.1#	45#	-0.01	7.29
106		Tert Butyl Alcohol	1.750	1.631	6.8	68	-0.01	8.08
		----------	Amount	Calc.	%Drift	----------		
107		Isobutyl alcohol	2000.000	1637.190	18.1	63	0.00	10.69
		----------	AvgRF	CCRF	%Dev	----------		
108		Tert Amyl Alcohol	1.238	1.195	3.5	67	0.00	10.83
109		1,4-Dioxane	0.150	0.129	14.0	60	0.00	12.17

(#) = Out of Range SPCC's out = 0 CCC's out = 0
G0068162.D APP9-G.M Thu Nov 18 10:11:24 2010

Continuing Calibration Summary

Job Number: F78009
Account: TETTNOAK Tetra Tech, Inc
Project: Holloman AFB; Alamogordo, NM

Sample: VG2582-CC2573
Lab FileID: G0068586.D

Evaluate Continuing Calibration Report

```
Data File : G:\HPCHEM\1\DATA\111910\G0068586.D          Vial: 1
Acq On    : 19 Nov 2010   9:33 am                   Operator: MikeM
Sample    : cc2573-4                                Inst    : MSVOA1
Misc      : ms15875,vg2582,5.00,,,,,                Multiplr: 1.00
MS Integration Params: small.p

Method       : C:\MSDCHEM\1\METHODS\APP9-G.M (RTE Integrator)
Title        : SW-846 Method 5035A/8260B
Last Update  : Tue Nov 09 13:05:46 2010
Response via : Multiple Level Calibration

Min. RRF     :   0.001  Min. Rel. Area :  50%  Max. R.T. Dev  0.50min
Max. RRF Dev :  20%     Max. Rel. Area : 200%
```

	Compound	AvgRF	CCRF	%Dev	Area%	Dev(min)	R.T.
1 I	Fluorobenzene	1.000	1.000	0.0	71	-0.02	11.06
2	Dichlorodifluoromethane	0.522	0.523	-0.2	66	-0.03	4.21
3 P	Chloromethane	0.622	0.579	6.9	64	-0.02	4.60
4 C	Vinyl Chloride	0.485	0.522	-7.6	68	-0.03	4.79
	----------	Amount	Calc.	%Drift		----------	
5	Bromomethane	100.000	116.562	-16.6	75	-0.02	5.42
6	Chloroethane	100.000	119.167	-19.2	74	-0.02	5.68
	----------	AvgRF	CCRF	%Dev		----------	
7	Trichlorofluoromethane	0.476	0.559	-17.4	81	-0.03	5.93
8	Ethyl Ether	0.252	0.272	-7.9	76	-0.02	6.39
9	1,2-Dichlorotrifluoroetha	0.491	0.562	-14.5	76	-0.03	6.72
10 C	1,1-Dichloroethene	0.743	0.857	-15.3	75	-0.02	6.79
11	Freon 113	0.360	0.464	-28.9#	83	-0.03	6.83
12	Carbon Disulfide	1.032	1.235	-19.7	76	-0.03	6.89
13	Iodomethane	0.743	0.864	-16.3	75	-0.02	7.07
14	Allyl chloride	0.699	0.808	-15.6	73	0.00	7.49
15	Methylene Chloride	0.756	0.749	0.9	67	-0.02	7.69
16	Acetone	0.301	0.302	-0.3	72	-0.02	7.70
17	Methyl acetate	0.299	0.267	10.7	58	-0.02	7.86
18	trans-1,2-Dichloroethene	0.754	0.847	-12.3	72	-0.02	7.89
19	Hexane	0.330	0.445	-34.8#	84	-0.02	7.97
20	Methyl Tert Butyl Ether	1.248	1.277	-2.3	69	-0.02	7.99
21	Acetonitrile	0.041	0.039	4.9	64	-0.02	8.39
22	Di-isopropyl ether	1.741	1.772	-1.8	64	-0.02	8.49
23	Chloroprene	0.794	0.953	-20.0#	73	-0.02	8.71
24 P	1,1-Dichloroethane	0.910	1.006	-10.5	70	-0.02	8.75
25	Acrylonitrile	0.159	0.127	20.1#	54	-0.02	8.81
26	ETBE	1.590	1.656	-4.2	67	-0.02	8.98
27	Vinyl acetate	1.116	0.968	13.3	58	-0.02	9.02
28	cis-1,2-Dichloroethene	0.425	0.456	-7.3	69	-0.02	9.47
29	2,2-Dichloropropane	0.477	0.544	-14.0	71	-0.02	9.63
30	Bromochloromethane	0.258	0.273	-5.8	69	-0.02	9.75
31	Cyclohexane	0.701	0.812	-15.8	72	-0.02	9.78
32 C	Chloroform	0.927	1.041	-12.3	72	-0.02	9.80
33	Ethyl acetate	0.569	0.522	8.3	62	-0.02	9.89
	----------	Amount	Calc.	%Drift		----------	
34	Tetrahydrofuran	100.000	93.749	6.3	61	-0.02	10.03
	----------	AvgRF	CCRF	%Dev		----------	

Continuing Calibration Summary

Job Number: F78009
Account: TETTNOAK Tetra Tech, Inc
Project: Holloman AFB; Alamogordo, NM

Sample: VG2582-CC2573
Lab FileID: G0068586.D

35	S	Dibromofluoromethane	0.343	0.366	-6.7	76	-0.02	10.04
36		Carbon Tetrachloride	0.727	0.925	-27.2#	81	-0.02	10.03
37		1,1,1-Trichloroethane	0.690	0.816	-18.3	75	-0.02	10.11
38		2-Butanone	0.284	0.288	-1.4	70	-0.02	10.17
39		1,1-Dichloropropene	0.625	0.716	-14.6	72	-0.02	10.26
40		Propionitrile	0.049	0.046	6.1	66	-0.02	10.58
41		Methacrylonitrile	0.318	0.322	-1.3	69	0.00	10.61
42		Benzene	1.504	1.618	-7.6	69	0.00	10.58
43		TAME	1.169	1.190	-1.8	67	-0.02	10.62
44	S	1,2-Dichloroethane-d4	0.433	0.459	-6.0	80	-0.02	10.73
45		1,2-Dichloroethane	0.808	0.888	-9.9	71	-0.02	10.81
46		Trichloroethene	0.449	0.523	-16.5	74	0.00	11.27
47		Methylcyclohexane	0.579	0.696	-20.2#	74	-0.02	11.27
48		Dibromomethane	0.318	0.360	-13.2	72	0.00	11.79
49	C	1,2-Dichloropropane	0.469	0.466	0.6	64	-0.02	11.89
50		Bromodichloromethane	0.698	0.789	-13.0	71	0.00	11.93
		----------	Amount	Calc.	%Drift	----------		
51		Methyl methacrylate	100.000	101.936	-1.9	68	0.00	12.03
		----------	AvgRF	CCRF	%Dev	----------		
52		2-Chloroethyl vinyl ether	0.167	0.208	-24.6#	79	-0.02	12.52
53		cis-1,3-Dichloropropene	0.726	0.828	-14.0	72	0.00	12.65
54	I	Chlorobenzene-d5	1.000	1.000	0.0	76	-0.02	14.62
55	S	Toluene-d8	1.418	1.417	0.1	75	-0.02	12.86
56	C	Toluene	2.154	2.207	-2.5	70	0.00	12.93
		----------	Amount	Calc.	%Drift	----------		
57		2-Nitropropane	500.000	465.855	6.8	72	0.00	13.20
		----------	AvgRF	CCRF	%Dev	----------		
58		4-Methyl-2-pentanone	0.615	0.614	0.2	72	-0.02	13.29
		----------	Amount	Calc.	%Drift	----------		
59		trans-1,3-Dichloropropene	100.000	93.288	6.7	71	0.00	13.37
		----------	AvgRF	CCRF	%Dev	----------		
60		Tetrachloroethene	0.635	0.702	-10.6	75	0.00	13.39
61		Ethyl methacrylate	0.652	0.662	-1.5	71	0.00	13.46
62		1,1,2-Trichloroethane	0.424	0.394	7.1	67	-0.02	13.56
63		Dibromochloromethane	0.681	0.730	-7.2	72	-0.02	13.79
64		1,3-Dichloropropane	0.847	0.819	3.3	68	-0.02	13.89
65		1,2-Dibromoethane	0.532	0.545	-2.4	68	0.00	14.10
		----------	Amount	Calc.	%Drift	----------		
66		2-hexanone	500.000	508.643	-1.7	79	-0.02	14.21
67		1-Chlorohexane	100.000	99.475	0.5	75	-0.02	14.54
		----------	AvgRF	CCRF	%Dev	----------		
68	C	Ethylbenzene	2.291	2.493	-8.8	71	0.00	14.62
69	P	Chlorobenzene	1.288	1.346	-4.5	69	-0.02	14.64
70		1,1,1,2-Tetrachloroethane	0.551	0.577	-4.7	70	-0.02	14.69
71		m,p-Xylene	1.785	1.939	-8.6	72	0.00	14.77
72		o-Xylene	2.030	2.129	-4.9	70	0.00	15.24
		----------	Amount	Calc.	%Drift	----------		
73		Styrene	100.000	93.737	6.3	68	-0.02	15.29
		----------	AvgRF	CCRF	%Dev	----------		

Continuing Calibration Summary

Job Number: F78009
Account: TETTNOAK Tetra Tech, Inc
Project: Holloman AFB; Alamogordo, NM

Sample: VG2582-CC2573
Lab FileID: G0068586.D

74	P	Bromoform	0.463	0.477	-3.0	69	0.00	15.38
75		Isopropylbenzene	1.858	2.081	-12.0	72	-0.02	15.54
76	I	1,4-Dichlorobenzene-d4	1.000	1.000	0.0	76	0.00	16.91
77	S	4-Bromofluorobenzene	1.001	0.978	2.3	73	0.00	15.88
		----------	Amount	Calc.	%Drift		----------	
78		cis-1,4-Dichloro-2-butene	100.000	93.954	6.0	73	0.00	15.89
		----------	AvgRF	CCRF	%Dev		----------	
79		n-Propylbenzene	4.907	5.211	-6.2	72	0.00	15.94
80		Bromobenzene	1.176	1.165	0.9	69	-0.02	15.99
81	P	1,1,2,2-Tetrachloroethane	1.052	0.944	10.3	66	0.00	16.01
82		1,3,5-Trimethylbenzene	3.392	3.646	-7.5	73	-0.02	16.10
83		2-Chlorotoluene	3.541	3.667	-3.6	72	-0.02	16.14
84		trans-1,4-Dichloro-2-Bute	0.336	0.356	-6.0	71	0.00	16.18
85		1,2,3-Trichloropropane	0.268	0.266	0.7	72	-0.02	16.17
86		Cyclohexanone	0.039	0.028	28.2#	53	0.00	16.26
87		4-Chlorotoluene	3.057	3.216	-5.2	72	-0.02	16.29
88		tert-Butylbenzene	2.352	2.398	-2.0	70	0.00	16.43
89		1,2,4-Trimethylbenzene	3.131	3.341	-6.7	75	0.00	16.49
90		Pentachloroethane	0.679	0.720	-6.0	73	0.00	16.50
91		sec-Butylbenzene	3.845	4.086	-6.3	72	0.00	16.58
92		4-Isopropyltoluene	2.954	3.196	-8.2	73	0.00	16.69
93		1,3-Dichlorobenzene	1.858	1.961	-5.5	74	0.00	16.85
94		1,4-Dichlorobenzene	1.805	1.894	-4.9	74	-0.02	16.92
		----------	Amount	Calc.	%Drift		----------	
95		n-Butylbenzene	100.000	99.648	0.4	77	0.00	17.09
		----------	AvgRF	CCRF	%Dev		----------	
96		Benzyl Chloride	0.301	0.315	-4.7	74	0.00	17.13
97		1,2-Dichlorobenzene	1.754	1.743	0.6	69	0.00	17.32
98		1,2-Dibromo-3-Chloropropa	0.210	0.196	6.7	72	0.00	18.06
		----------	Amount	Calc.	%Drift		----------	
99		Hexachlorobutadiene	100.000	97.175	2.8	83	0.00	18.62
100		1,2,4-Trichlorobenzene	100.000	94.063	5.9	80	0.00	18.70
101		Naphthalene	100.000	89.864	10.1	73	0.00	19.05
102		1,2,3-Trichlorobenzene	100.000	99.550	0.5	81	0.00	19.24
		----------	AvgRF	CCRF	%Dev		----------	
103	I	Tert Butyl Alcohol-d10	1.000	1.000	0.0	80	0.00	7.97
104		Ethanol	0.196	0.149	24.0#	65	0.00	6.63
105		Acrolein	1.165	1.497	-28.5#	85	-0.02	7.29
106		Tert Butyl Alcohol	1.750	1.605	8.3	67	-0.02	8.07
		----------	Amount	Calc.	%Drift		----------	
107		Isobutyl alcohol	2000.000	1810.437	9.5	69	0.00	10.67
		----------	AvgRF	CCRF	%Dev		----------	
108		Tert Amyl Alcohol	1.238	1.198	3.2	67	-0.02	10.81
109		1,4-Dioxane	0.150	0.121	19.3	56	-0.02	12.14

(#) = Out of Range SPCC's out = 0 CCC's out = 0
G0068162.D APP9-G.M Fri Nov 19 11:27:35 2010

Initial Calibration Summary

Job Number: F78009
Account: TETTNOAK Tetra Tech, Inc
Project: Holloman AFB; Alamogordo, NM

Sample: VH2460-ICC2460
Lab FileID: H066004.D

Response Factor Report MSVOA3

Method : C:\MSDCHEM\1\METHODS\APP9-H.M (RTE Integrator)
Title : SW-846 Method 5035A/8260B
Last Update : Mon Nov 15 15:42:44 2010
Response via : Initial Calibration

Calibration Files
1 =H066001.D 2 =H066002.D 3 =H066003.D 4 =H066004.D
5 =H066005.D 6 =H066006.D

		Compound	1	2	3	4	5	6	Avg	%RSD
1)	I	Fluorobenzene	----------ISTD----------							
2)		Dichlorodifluoromet	0.252	0.264	0.216	0.216	0.218	0.207	0.229	10.23
3)	P	Chloromethane	0.601	0.567	0.471	0.440	0.448	0.443	0.495	14.28
4)	C	Vinyl Chloride	0.497	0.437	0.388	0.357	0.375	0.373	0.405	13.04
5)		Bromomethane	0.258	0.210	0.153	0.128	0.118	0.105	0.162	36.96
		---- Quadratic regr., Force(0,0) ---- Coefficient = 0.9970								
		Response Ratio = 0.00000 + 0.16215 *A + -0.01447 *A^2								
6)		Chloroethane	0.274	0.251	0.197	0.180	0.162	0.122	0.198	28.73
		---- Quadratic regr., Force(0,0) ---- Coefficient = 0.9948								
		Response Ratio = 0.00000 + 0.24394 *A + -0.02997 *A^2								
7)		Trichlorofluorometh	0.510	0.433	0.413	0.402	0.395	0.363	0.419	11.93
8)		Ethyl Ether	0.348	0.307	0.318	0.293	0.303	0.301	0.312	6.23
9)		1,2-Dichlorotrifluo	0.598	0.483	0.486	0.470	0.468	0.447	0.492	10.94
10)	C	1,1-Dichloroethene	0.826	0.707	0.701	0.689	0.690	0.662	0.713	8.09
11)		Freon 113	0.436	0.360	0.350	0.326	0.322	0.316	0.352	12.76
12)		Carbon Disulfide	1.486	1.197	1.220	1.183	1.202	1.173	1.244	9.62
13)		Iodomethane	0.620	0.524	0.563	0.528	0.529	0.517	0.547	7.19
14)		Allyl chloride	0.950	0.982	0.996	1.021	1.015	1.007	0.995	2.63
15)		Methylene Chloride	2.057	1.150	0.956	0.746	0.727	0.717	1.059	48.88
		---- Linear regr., Force(0,0) ---- Coefficient = 0.9974								
		Response Ratio = 0.00000 + 0.73467 *A								
16)		Acetone	0.250	0.299	0.301	0.243	0.232	0.241	0.261	11.80
17)		Methyl acetate	0.250	0.283	0.279	0.241	0.230	0.246	0.255	8.34
18)		trans-1,2-Dichloroe	0.789	0.748	0.743	0.720	0.722	0.686	0.735	4.68
19)		Hexane	0.371	0.406	0.413	0.413	0.405	0.376	0.397	4.75
20)		Methyl Tert Butyl E	0.785	0.916	0.871	0.800	0.789	0.801	0.827	6.51
21)		Acetonitrile	0.036	0.044	0.047	0.043	0.041	0.046	0.043	8.98
22)		Di-isopropyl ether	1.768	1.791	1.837	1.816	1.861	1.833	1.818	1.85
23)		Chloroprene	0.833	0.814	0.837	0.805	0.870	0.802	0.827	3.07
24)	P	1,1-Dichloroethane	0.902	0.878	0.873	0.843	0.858	0.825	0.863	3.15
25)		Acrylonitrile	0.107	0.141	0.146	0.129	0.117	0.129	0.128	11.50
26)		ETBE	1.131	1.143	1.120	1.060	1.018	0.992	1.077	5.87
27)		Vinyl acetate	0.789	1.003	1.000	0.894	0.859	0.846	0.898	9.68
28)		cis-1,2-Dichloroeth	0.370	0.400	0.398	0.388	0.400	0.390	0.391	2.92
29)		2,2-Dichloropropane	0.642	0.646	0.652	0.628	0.643	0.606	0.636	2.62
30)		Bromochloromethane	0.172	0.204	0.192	0.179	0.180	0.168	0.182	7.16
31)		Cyclohexane	0.890	0.841	0.825	0.828	0.811	0.773	0.828	4.63
32)	C	Chloroform	0.863	0.823	0.820	0.784	0.784	0.733	0.801	5.56
33)		Ethyl acetate	0.282	0.349	0.332	0.288	0.279	0.290	0.303	9.80
34)		Tetrahydrofuran	0.101	0.111	0.109	0.103	0.090	0.092	0.101	8.60
35)	S	Dibromofluoromethan	0.247	0.251	0.252	0.234	0.229	0.231	0.241	4.38
36)		Carbon Tetrachlorid	0.610	0.617	0.604	0.611	0.590	0.555	0.598	3.80
37)		1,1,1-Trichloroetha	0.666	0.662	0.640	0.636	0.626	0.594	0.637	4.14

Initial Calibration Summary

Job Number: F78009 **Sample:** VH2460-ICC2460
Account: TETTNOAK Tetra Tech, Inc **Lab FileID:** H066004.D
Project: Holloman AFB; Alamogordo, NM

```
38)      2-Butanone           0.291 0.341 0.332 0.282 0.262 0.276 0.297  10.79
39)      1,1-Dichloropropene 0.673 0.635 0.652 0.632 0.629 0.596 0.636   4.03
40)      Propionitrile        0.040 0.056 0.052 0.043 0.040 0.040 0.045  15.65
             ---- Linear regr., Force(0,0) ----  Coefficient =  0.9941
               Response Ratio = 0.00000 + 0.04065 *A

41)      Methacrylonitrile    0.294 0.360 0.335 0.280 0.255 0.250 0.296  14.96
             ---- Linear regr., Force(0,0) ----  Coefficient =  0.9926
               Response Ratio = 0.00000 + 0.25853 *A

42)      Benzene              1.706 1.671 1.522 1.430 1.370 1.251 1.492  11.84
43)      TAME                 0.697 0.767 0.742 0.710 0.688 0.700 0.717   4.25
44)  S   1,2-Dichloroethane- 0.380 0.404 0.410 0.362 0.336 0.340 0.372   8.42
45)      1,2-Dichloroethane   0.665 0.738 0.734 0.688 0.676 0.662 0.694   4.89
46)      Trichloroethene      0.462 0.432 0.426 0.402 0.388 0.364 0.412   8.43
47)      Methylcyclohexane    0.616 0.639 0.620 0.613 0.595 0.555 0.606   4.80
48)      Dibromomethane       0.184 0.220 0.234 0.224 0.219 0.217 0.216   7.87
49)  C   1,2-Dichloropropane 0.449 0.441 0.459 0.453 0.455 0.442 0.450   1.60
50)      Bromodichloromethan 0.505 0.597 0.617 0.605 0.607 0.592 0.587   7.05
51)      Methyl methacrylate 0.331 0.505 0.519 0.475 0.463 0.482 0.463  14.62
52)      2-Chloroethyl vinyl 0.090 0.138 0.141 0.129 0.118 0.118 0.122  15.30
             ---- Linear regr., Force(0,0) ----  Coefficient =  0.9959
               Response Ratio = 0.00000 + 0.12025 *A

53)      cis-1,3-Dichloropro 0.608 0.755 0.762 0.732 0.721 0.708 0.715   7.80

54)  I   Chlorobenzene-d5       ----------------ISTD--------------------
55)  S   Toluene-d8                1.344 1.422 1.603 1.719 1.887 1.595  13.80
56)  C   Toluene              2.222 2.315 2.363 2.553 2.746 2.804 2.501   9.56
57)      2-Nitropropane       0.149 0.226 0.230 0.228 0.242 0.270 0.224  17.98
             ---- Linear regr., Force(0,0) ----  Coefficient =  0.9922
               Response Ratio = 0.00000 + 0.25439 *A

58)      4-Methyl-2-pentanon 0.638 0.724 0.737 0.707 0.724 0.787 0.719   6.74
59)      trans-1,3-Dichlorop 0.668 0.880 0.906 0.947 1.028 1.064 0.916  15.29
             ---- Linear regr., Force(0,0) ----  Coefficient =  0.9974
               Response Ratio = 0.00000 + 1.03154 *A

60)      Tetrachloroethene    0.668 0.696 0.665 0.688 0.698 0.680 0.682   2.03
61)      Ethyl methacrylate   0.540 0.749 0.774 0.823 0.889 0.969 0.791  18.55
             ---- Linear regr., Force(0,0) ----  Coefficient =  0.9939
               Response Ratio = 0.00000 + 0.91811 *A

62)      1,1,2-Trichloroetha 0.304 0.410 0.412 0.424 0.468 0.492 0.419  15.59
             ---- Linear regr., Force(0,0) ----  Coefficient =  0.9957
               Response Ratio = 0.00000 + 0.47306 *A

63)      Dibromochloromethan 0.351 0.529 0.562 0.600 0.632 0.664 0.556  20.00
             ---- Linear regr., Force(0,0) ----  Coefficient =  0.9978
               Response Ratio = 0.00000 + 0.64155 *A

64)      1,3-Dichloropropane 0.696 0.933 0.913 0.959 1.054 1.125 0.946  15.51
             ---- Linear regr., Force(0,0) ----  Coefficient =  0.9947
               Response Ratio = 0.00000 + 1.07344 *A

65)      1,2-Dibromoethane    0.330 0.438 0.486 0.478 0.526 0.558 0.469  17.02
             ---- Linear regr., Force(0,0) ----  Coefficient =  0.9955
               Response Ratio = 0.00000 + 0.53471 *A

66)      2-hexanone           0.550 0.669 0.667 0.657 0.659 0.699 0.650   7.94
```

Initial Calibration Summary

Job Number: F78009 **Sample:** VH2460-ICC2460
Account: TETTNOAK Tetra Tech, Inc **Lab FileID:** H066004.D
Project: Holloman AFB; Alamogordo, NM

```
 67)      1-Chlorohexane       0.744 0.832 0.868 0.962 1.039 1.042 0.914  13.14
 68) C    Ethylbenzene         2.400 2.644 2.592 2.661 2.783 2.684 2.628   4.87
 69) P    Chlorobenzene        1.287 1.423 1.401 1.396 1.463 1.438 1.401   4.36
 70)      1,1,1,2-Tetrachloro 0.455 0.536 0.544 0.580 0.615 0.618 0.558  10.97
 71)      m,p-Xylene           2.218 2.232 2.163 2.132 2.174 2.070 2.165   2.73
 72)      o-Xylene             1.988 2.309 2.319 2.431 2.579 2.552 2.363   9.12
 73)      Styrene              1.270 1.560 1.648 1.736 1.866 1.862 1.657  13.53
 74) P    Bromoform            0.229 0.373 0.391 0.404 0.421 0.434 0.375  19.89
              ---- Linear regr., Force(0,0) ----  Coefficient =  0.9991
                Response Ratio = 0.00000 + 0.42431 *A

 75)      Isopropylbenzene     2.053 2.235 2.220 2.361 2.526 2.435 2.305   7.37

 76) I    1,4-Dichlorobenzene-d ----------------ISTD---------------------
 77) S    4-Bromofluorobenzen 0.868 0.826 0.851 0.884 0.892 0.895 0.869   3.10
 78)      cis-1,4-Dichloro-2- 0.271 0.434 0.457 0.450 0.480 0.509 0.434  19.38
              ---- Linear regr., Force(0,0) ----  Coefficient =  0.9968
                Response Ratio = 0.00000 + 0.49065 *A

 79)      n-Propylbenzene      5.617 5.283 5.523 5.552 5.720 5.404 5.516   2.81
 80)      Bromobenzene         1.181 1.135 1.156 1.078 1.081 1.016 1.108   5.47
 81) P    1,1,2,2-Tetrachloro 0.900 1.066 1.070 0.979 1.005 1.030 1.009   6.31
 82)      1,3,5-Trimethylbenz 3.793 3.828 3.844 3.723 3.727 3.514 3.738   3.23
 83)      2-Chlorotoluene      4.367 3.903 3.988 3.965 4.008 3.783 4.002   4.90
 84)      trans-1,4-Dichloro- 0.265 0.431 0.424 0.424 0.445 0.425 0.402  16.88
              ---- Linear regr., Force(0,0) ----  Coefficient =  0.9988
                Response Ratio = 0.00000 + 0.43097 *A

 85)      1,2,3-Trichloroprop 0.163 0.282 0.291 0.251 0.262 0.265 0.252  18.32
              ---- Linear regr., Force(0,0) ----  Coefficient =  0.9980
                Response Ratio = 0.00000 + 0.26310 *A

 86)      Cyclohexanone        0.028 0.028 0.031 0.031 0.033 0.038 0.031  11.84
 87)      4-Chlorotoluene      3.604 3.579 3.660 3.638 3.762 3.641 3.647   1.73
 88)      tert-Butylbenzene    2.416 2.471 2.498 2.513 2.518 2.431 2.474   1.75
 89)      1,2,4-Trimethylbenz 3.910 3.624 3.626 3.492 3.353 3.088 3.516   7.93
 90)      Pentachloroethane    0.656 0.670 0.677 0.607 0.574 0.547 0.622   8.67
 91)      sec-Butylbenzene     4.672 4.625 4.647 4.702 4.780 4.462 4.648   2.28
 92)      4-Isopropyltoluene   3.491 3.587 3.621 3.645 3.688 3.417 3.575   2.85
 93)      1,3-Dichlorobenzene 2.053 2.035 2.077 2.074 2.119 2.011 2.061   1.81
 94)      1,4-Dichlorobenzene 2.266 2.194 2.153 2.095 2.081 1.980 2.128   4.67
 95)      n-Butylbenzene       2.066 2.360 2.336 2.473 2.536 2.374 2.358   6.88
 96)      Benzyl Chloride      0.186 0.292 0.374 0.354 0.377 0.375 0.326  23.22
              ---- Linear regr., Force(0,0) ----  Coefficient =  0.9991
                Response Ratio = 0.00000 + 0.37253 *A

 97)      1,2-Dichlorobenzene 1.975 2.069 1.982 1.957 2.002 1.921 1.984   2.50
 98)      1,2-Dibromo-3-Chlor 0.078 0.178 0.214 0.204 0.218 0.239 0.189  30.61
              ---- Linear regr., Force(0,0) ----  Coefficient =  0.9943
                Response Ratio = 0.00000 + 0.22679 *A

 99)      Hexachlorobutadiene 1.003 1.149 1.073 1.090 1.023 0.912 1.042   7.87
100)      1,2,4-Trichlorobenz 1.510 1.578 1.553 1.511 1.492 1.384 1.505   4.46
101)      Naphthalene          3.110 2.673 2.870 2.735 2.778 2.826 2.832   5.39
102)      1,2,3-Trichlorobenz 1.459 1.402 1.363 1.349 1.310 1.234 1.353   5.69

103) I    Tert Butyl Alcohol-d1 ----------------ISTD---------------------
104)      Ethanol              0.317 0.318 0.227 0.292 0.303 0.334 0.298  12.69
105)      Acrolein             0.664 0.980 1.192 1.247 1.319 1.379 1.130  23.60
              ---- Linear regr., Force(0,0) ----  Coefficient =  0.9982
```

Initial Calibration Summary

Job Number: F78009
Account: TETTNOAK Tetra Tech, Inc
Project: Holloman AFB; Alamogordo, NM

Sample: VH2460-ICC2460
Lab FileID: H066004.D

```
                Response Ratio = 0.00000 + 1.33526 *A

106)     Tert Butyl Alcohol  2.441 2.555 2.548 2.492 2.594 2.691 2.553   3.37
107)     Isobutyl alcohol    0.382 0.278 0.274 0.296 0.269 0.268 0.294  15.01
             ---- Linear regr., Force(0,0) ----  Coefficient =  0.9973
                Response Ratio = 0.00000 + 0.27228 *A

108)     Tert Amyl Alcohol   0.871 1.315 1.291 1.443 1.471 1.548 1.323  18.26
             ---- Linear regr., Force(0,0) ----  Coefficient =  0.9981
                Response Ratio = 0.00000 + 1.50103 *A

109)     1,4-Dioxane         0.134 0.101 0.152 0.164 0.167 0.171 0.148  17.93
             ---- Linear regr., Force(0,0) ----  Coefficient =  0.9990
                Response Ratio = 0.00000 + 0.16758 *A

 ---------------------------------------------------------------------------
 (#) = Out of Range

           APP9-H.M          Mon Nov 15 15:43:42 2010
```

5.7.12

5

Initial Calibration Verification

Job Number: F78009
Account: TETTNOAK Tetra Tech, Inc
Project: Holloman AFB; Alamogordo, NM

Sample: VH2460-ICV2460
Lab FileID: H066007.D

Evaluate Continuing Calibration Report

Data File : H:\HPCHEM\1\DATA\111510\H066007.D Vial: 7
Acq On : 15 Nov 2010 2:19 pm Operator: MikeM
Sample : icv2460-3 Inst : MSVOA3
Misc : ms15822,vh2460,5.00,,,,, Multiplr: 1.00
MS Integration Params: small.p

Method : C:\MSDCHEM\1\METHODS\APP9-H.M (RTE Integrator)
Title : SW-846 Method 5035A/8260B
Last Update : Mon Nov 15 14:43:10 2010
Response via : Multiple Level Calibration

Min. RRF : 0.001 Min. Rel. Area : 50% Max. R.T. Dev 0.50min
Max. RRF Dev : 20% Max. Rel. Area : 200%

		Compound	AvgRF	CCRF	%Dev	Area%	Dev(min)	R.T.
1	I	Fluorobenzene	1.000	1.000	0.0	110	0.00	11.24
2		Dichlorodifluoromethane	0.229	0.234	-2.2	119	0.00	3.97
3	P	Chloromethane	0.495	0.455	8.1	106	0.00	4.28
4	C	Vinyl Chloride	0.405	0.375	7.4	106	0.00	4.50
		----------	Amount	Calc.	%Drift		----------	
5		Bromomethane	50.000	48.679	2.6	103	0.01	5.13
6		Chloroethane	50.000	44.114	11.8	107	0.00	5.37
		----------	AvgRF	CCRF	%Dev		----------	
7		Trichlorofluoromethane	0.419	0.404	3.6	107	0.01	5.66
8		Ethyl Ether	0.312	0.328	-5.1	113	0.01	6.20
9		1,2-Dichlorotrifluoroetha	0.492	0.552	-12.2	124	0.00	6.55
10	C	1,1-Dichloroethene	0.713	0.656	8.0	103	0.01	6.61
11		Freon 113	0.352	0.351	0.3	110	0.00	6.71
12		Carbon Disulfide	1.244	1.152	7.4	103	0.00	6.71
13		Iodomethane	0.547	0.528	3.5	103	0.00	6.89
14		Allyl chloride	0.995	0.975	2.0	107	0.01	7.43
		----------	Amount	Calc.	%Drift		----------	
15		Methylene Chloride	50.000	65.516	-31.0#	110	0.01	7.61
		----------	AvgRF	CCRF	%Dev		----------	
16		Acetone	0.261	0.145	44.4#	53	0.01	7.66
17		Methyl acetate	0.255	0.282	-10.6	111	0.00	7.85
18		trans-1,2-Dichloroethene	0.735	0.736	-0.1	109	0.00	7.88
19		Hexane	0.397	0.462	-16.4	122	0.00	7.99
20		Methyl Tert Butyl Ether	0.827	0.877	-6.0	110	0.00	8.03
21		Acetonitrile	0.043	0.046	-7.0	107	0.01	8.42
22		Di-isopropyl ether	1.818	2.059	-13.3	123	0.00	8.60
23		Chloroprene	0.827	0.854	-3.3	112	0.00	8.81
24	P	1,1-Dichloroethane	0.863	0.915	-6.0	115	0.00	8.84
25		Acrylonitrile	0.128	0.140	-9.4	105	0.01	8.89
26		ETBE	1.077	1.145	-6.3	112	0.00	9.14
27		Vinyl acetate	0.898	0.885	1.4	97	0.00	9.15
28		cis-1,2-Dichloroethene	0.391	0.436	-11.5	120	0.00	9.62
29		2,2-Dichloropropane	0.636	0.646	-1.6	109	0.00	9.77
30		Bromochloromethane	0.182	0.185	-1.6	106	0.00	9.90
31		Cyclohexane	0.828	0.867	-4.7	115	0.00	9.94
32	C	Chloroform	0.801	0.832	-3.9	111	0.00	9.97
33		Ethyl acetate	0.303	0.334	-10.2	110	0.01	10.09
34		Tetrahydrofuran	0.101	0.105	-4.0	106	0.02	10.22

Initial Calibration Verification

Job Number: F78009
Account: TETTNOAK Tetra Tech, Inc
Project: Holloman AFB; Alamogordo, NM

Sample: VH2460-ICV2460
Lab FileID: H066007.D

35	S	Dibromofluoromethane	0.241	0.235	2.5	102	0.00	10.21
36		Carbon Tetrachloride	0.598	0.591	1.2	107	0.00	10.20
37		1,1,1-Trichloroethane	0.637	0.630	1.1	108	0.00	10.28
38		2-Butanone	0.297	0.224	24.6#	74	0.01	10.35
39		1,1-Dichloropropene	0.636	0.672	-5.7	113	0.00	10.43
		----------	Amount	Calc.	%Drift		----------	
40		Propionitrile	500.000	561.558	-12.3	97	0.00	10.73
41		Methacrylonitrile	500.000	592.041	-18.4	100	0.00	10.75
		----------	AvgRF	CCRF	%Dev		----------	
42		Benzene	1.492	1.608	-7.8	116	0.00	10.75
43		TAME	0.717	0.769	-7.3	114	0.01	10.84
44	S	1,2-Dichloroethane-d4	0.372	0.384	-3.2	103	0.00	10.90
45		1,2-Dichloroethane	0.694	0.723	-4.2	108	0.01	10.99
46		Trichloroethene	0.412	0.435	-5.6	112	0.01	11.46
47		Methylcyclohexane	0.606	0.723	-19.3	128	0.00	11.47
48		Dibromomethane	0.216	0.246	-13.9	116	0.00	11.98
49	C	1,2-Dichloropropane	0.450	0.494	-9.8	118	0.00	12.07
50		Bromodichloromethane	0.587	0.639	-8.9	113	0.00	12.12
51		Methyl methacrylate	0.463	0.486	-5.0	103	0.00	12.24
		----------	Amount	Calc.	%Drift		----------	
52		2-Chloroethyl vinyl ether	250.000	263.455	-5.4	98	0.00	12.71
		----------	AvgRF	CCRF	%Dev		----------	
53		cis-1,3-Dichloropropene	0.715	0.808	-13.0	116	0.00	12.83
54	I	Chlorobenzene-d5	1.000	1.000	0.0	107	0.00	14.76
55	S	Toluene-d8	1.595	1.456	8.7	109	0.00	13.05
56	C	Toluene	2.501	2.555	-2.2	116	0.00	13.11
		----------	Amount	Calc.	%Drift		----------	
57		2-Nitropropane	250.000	209.326	16.3	99	0.00	13.34
		----------	AvgRF	CCRF	%Dev		----------	
58		4-Methyl-2-pentanone	0.719	0.721	-0.3	105	0.00	13.47
		----------	Amount	Calc.	%Drift		----------	
59		trans-1,3-Dichloropropene	50.000	49.816	0.4	121	0.00	13.54
		----------	AvgRF	CCRF	%Dev		----------	
60		Tetrachloroethene	0.682	0.699	-2.5	112	0.01	13.57
		----------	Amount	Calc.	%Drift		----------	
61		Ethyl methacrylate	50.000	41.517	17.0	105	0.01	13.65
62		1,1,2-Trichloroethane	50.000	44.990	10.0	110	0.00	13.73
63		Dibromochloromethane	50.000	42.961	14.1	105	0.00	13.95
64		1,3-Dichloropropane	50.000	45.671	8.7	115	0.00	14.03
65		1,2-Dibromoethane	50.000	44.311	11.4	104	0.00	14.24
		----------	AvgRF	CCRF	%Dev		----------	
66		2-hexanone	0.650	0.534	17.8	86	0.00	14.36
67		1-Chlorohexane	0.914	0.996	-9.0	123	0.00	14.68
68	C	Ethylbenzene	2.628	2.790	-6.2	115	0.00	14.76
69	P	Chlorobenzene	1.401	1.532	-9.4	117	0.00	14.78
70		1,1,1,2-Tetrachloroethane	0.558	0.577	-3.4	113	0.00	14.83
71		m,p-Xylene	2.165	2.337	-7.9	116	0.00	14.91
72		o-Xylene	2.363	2.533	-7.2	117	0.00	15.38
73		Styrene	1.657	1.781	-7.5	116	0.00	15.43

Initial Calibration Verification

Job Number: F78009
Account: TETTNOAK Tetra Tech, Inc
Project: Holloman AFB; Alamogordo, NM

Sample: VH2460-ICV2460
Lab FileID: H066007.D

			Amount	Calc.	%Drift			
74	P	Bromoform	50.000	42.762	14.5	99	0.00	15.51
			AvgRF	CCRF	%Dev			
75		Isopropylbenzene	2.305	2.773	-20.3#	134	0.00	15.70
76	I	1,4-Dichlorobenzene-d4	1.000	1.000	0.0	102	0.00	17.23
77	S	4-Bromofluorobenzene	0.869	0.840	3.3	101	0.00	16.04
			Amount	Calc.	%Drift			
78		cis-1,4-Dichloro-2-butene	50.000	47.752	4.5	105	0.00	16.06
			AvgRF	CCRF	%Dev			
79		n-Propylbenzene	5.516	6.508	-18.0	120	0.00	16.13
80		Bromobenzene	1.108	1.199	-8.2	106	0.01	16.19
81	P	1,1,2,2-Tetrachloroethane	1.009	1.172	-16.2	112	0.00	16.20
82		1,3,5-Trimethylbenzene	3.738	4.354	-16.5	115	0.00	16.31
83		2-Chlorotoluene	4.002	4.657	-16.4	119	0.00	16.35
			Amount	Calc.	%Drift			
84		trans-1,4-Dichloro-2-Bute	50.000	54.935	-9.9	114	0.00	16.38
85		1,2,3-Trichloropropane	50.000	50.788	-1.6	94	0.00	16.37
			AvgRF	CCRF	%Dev			
86		Cyclohexanone	0.031	0.044	-41.9#	146	0.00	16.46
87		4-Chlorotoluene	3.647	4.259	-16.8	119	0.00	16.51
88		tert-Butylbenzene	2.474	2.866	-15.8	117	0.00	16.67
89		1,2,4-Trimethylbenzene	3.516	4.192	-19.2	118	0.00	16.74
90		Pentachloroethane	0.622	0.678	-9.0	102	0.00	16.75
91		sec-Butylbenzene	4.648	5.618	-20.9#	123	0.00	16.86
92		4-Isopropyltoluene	3.575	4.366	-22.1#	123	0.00	16.98
93		1,3-Dichlorobenzene	2.061	2.393	-16.1	117	0.00	17.16
94		1,4-Dichlorobenzene	2.128	2.397	-12.6	113	0.00	17.25
95		n-Butylbenzene	2.358	2.892	-22.6#	126	0.00	17.44
			Amount	Calc.	%Drift			
96		Benzyl Chloride	50.000	50.305	-0.6	102	0.00	17.49
			AvgRF	CCRF	%Dev			
97		1,2-Dichlorobenzene	1.984	2.239	-12.9	115	0.00	17.71
			Amount	Calc.	%Drift			
98		1,2-Dibromo-3-Chloropropa	50.000	50.027	-0.1	108	0.00	18.56
			AvgRF	CCRF	%Dev			
99		Hexachlorobutadiene	1.042	1.249	-19.9	119	0.00	19.21
100		1,2,4-Trichlorobenzene	1.505	1.719	-14.2	113	0.00	19.29
101		Naphthalene	2.832	3.219	-13.7	114	0.00	19.66
102		1,2,3-Trichlorobenzene	1.353	1.528	-12.9	114	0.00	19.88
103	I	Tert Butyl Alcohol-d10	1.000	1.000	0.0	92	0.01	8.05
104		Ethanol	0.298	0.355	-19.1	144	-0.04	6.49
			Amount	Calc.	%Drift			
105		Acrolein	250.000	259.613	-3.8	107	0.00	7.20
			AvgRF	CCRF	%Dev			
106		Tert Butyl Alcohol	2.553	2.562	-0.4	93	0.01	8.15

Initial Calibration Verification

Job Number: F78009
Account: TETTNOAK Tetra Tech, Inc
Project: Holloman AFB; Alamogordo, NM

Sample: VH2460-ICV2460
Lab FileID: H066007.D

		Amount	Calc.	%Drift			
107	Isobutyl alcohol	1000.000	1165.164	-16.5	107	0.02	10.22
108	Tert Amyl Alcohol	500.000	553.170	-10.6	119	0.00	11.04
109	1,4-Dioxane	1000.000	1095.580	-9.6	112	0.00	12.35

(#) = Out of Range SPCC's out = 0 CCC's out = 0
H066003.D APP9-H.M Mon Nov 15 15:15:42 2010

Continuing Calibration Summary

Job Number: F78009
Account: TETTNOAK Tetra Tech, Inc
Project: Holloman AFB; Alamogordo, NM

Sample: VH2463-CC2460
Lab FileID: H066136.D

Evaluate Continuing Calibration Report

```
Data File : H:\HPCHEM\1\DATA\111810\H066136.D            Vial: 1
Acq On    : 18 Nov 2010   9:43 am                     Operator: MikeM
Sample    : cc2460-4                                  Inst    : MSVOA3
Misc      : ms15894,vh2463,5.00,,,,,                  Multiplr: 1.00
MS Integration Params: small.p

Method       : C:\MSDCHEM\1\METHODS\APP9-H.M (RTE Integrator)
Title        : SW-846 Method 5035A/8260B
Last Update  : Mon Nov 15 15:42:44 2010
Response via : Multiple Level Calibration

Min. RRF     :   0.001  Min. Rel. Area :  50%  Max. R.T. Dev  0.50min
Max. RRF Dev :  20%     Max. Rel. Area : 200%
```

		Compound	AvgRF	CCRF	%Dev	Area%	Dev(min)	R.T.
1	I	Fluorobenzene	1.000	1.000	0.0	92	-0.01	11.23
2		Dichlorodifluoromethane	0.229	0.298	-30.1#	127	-0.01	3.96
3	P	Chloromethane	0.495	0.501	-1.2	105	-0.02	4.27
4	C	Vinyl Chloride	0.405	0.400	1.2	103	-0.02	4.48
			Amount	Calc.	%Drift			
5		Bromomethane	100.000	103.897	-3.9	99	0.00	5.10
6		Chloroethane	100.000	103.747	-3.7	96	0.00	5.37
			AvgRF	CCRF	%Dev			
7		Trichlorofluoromethane	0.419	0.423	-1.0	97	-0.01	5.64
8		Ethyl Ether	0.312	0.307	1.6	97	0.00	6.19
9		1,2-Dichlorotrifluoroetha	0.492	0.513	-4.3	101	-0.03	6.53
10	C	1,1-Dichloroethene	0.713	0.751	-5.3	100	-0.01	6.59
11		Freon 113	0.352	0.378	-7.4	107	-0.02	6.69
12		Carbon Disulfide	1.244	1.271	-2.2	99	-0.02	6.69
13		Iodomethane	0.547	0.603	-10.2	105	-0.03	6.87
14		Allyl chloride	0.995	1.064	-6.9	96	-0.02	7.40
			Amount	Calc.	%Drift			
15		Methylene Chloride	100.000	96.009	4.0	87	-0.02	7.57
			AvgRF	CCRF	%Dev			
16		Acetone	0.261	0.264	-1.1	100	-0.01	7.64
17		Methyl acetate	0.255	0.230	9.8	88	-0.02	7.83
18		trans-1,2-Dichloroethene	0.735	0.783	-6.5	100	-0.02	7.86
19		Hexane	0.397	0.460	-15.9	102	-0.03	7.96
20		Methyl Tert Butyl Ether	0.827	0.842	-1.8	97	-0.02	8.01
21		Acetonitrile	0.043	0.040	7.0	85	-0.01	8.40
22		Di-isopropyl ether	1.818	1.849	-1.7	94	-0.02	8.58
23		Chloroprene	0.827	0.892	-7.9	102	-0.02	8.78
24	P	1,1-Dichloroethane	0.863	0.895	-3.7	98	-0.01	8.82
25		Acrylonitrile	0.128	0.088	31.3#	63	-0.02	8.86
26		ETBE	1.077	1.162	-7.9	101	-0.02	9.12
27		Vinyl acetate	0.898	0.593	34.0#	61	-0.02	9.13
28		cis-1,2-Dichloroethene	0.391	0.427	-9.2	102	-0.02	9.60
29		2,2-Dichloropropane	0.636	0.696	-9.4	102	-0.02	9.76
30		Bromochloromethane	0.182	0.196	-7.7	101	-0.02	9.88
31		Cyclohexane	0.828	0.881	-6.4	98	-0.02	9.92
32	C	Chloroform	0.801	0.843	-5.2	99	-0.01	9.96
33		Ethyl acetate	0.303	0.282	6.9	90	-0.02	10.05
34		Tetrahydrofuran	0.101	0.090	10.9	81	-0.02	10.18

Continuing Calibration Summary

Job Number: F78009
Account: TETTNOAK Tetra Tech, Inc
Project: Holloman AFB; Alamogordo, NM

Sample: VH2463-CC2460
Lab FileID: H066136.D

35	S	Dibromofluoromethane	0.241	0.252	-4.6	99	-0.02	10.19
36		Carbon Tetrachloride	0.598	0.655	-9.5	99	-0.01	10.19
37		1,1,1-Trichloroethane	0.637	0.691	-8.5	100	-0.02	10.26
38		2-Butanone	0.297	0.289	2.7	94	-0.01	10.33
39		1,1-Dichloropropene	0.636	0.680	-6.9	99	-0.02	10.41
		----------	Amount	Calc.	%Drift		----------	
40		Propionitrile	1000.000	1031.223	-3.1	89	-0.02	10.70
41		Methacrylonitrile	1000.000	1090.466	-9.0	93	0.00	10.74
		----------	AvgRF	CCRF	%Dev		----------	
42		Benzene	1.492	1.508	-1.1	97	-0.02	10.72
43		TAME	0.717	0.786	-9.6	102	-0.01	10.82
44	S	1,2-Dichloroethane-d4	0.372	0.383	-3.0	97	-0.02	10.88
45		1,2-Dichloroethane	0.694	0.721	-3.9	96	-0.01	10.97
46		Trichloroethene	0.412	0.428	-3.9	98	-0.01	11.44
47		Methylcyclohexane	0.606	0.652	-7.6	98	-0.02	11.45
48		Dibromomethane	0.216	0.224	-3.7	92	-0.02	11.95
49	C	1,2-Dichloropropane	0.450	0.471	-4.7	96	-0.02	12.05
50		Bromodichloromethane	0.587	0.636	-8.3	97	-0.01	12.11
51		Methyl methacrylate	0.463	0.468	-1.1	91	-0.02	12.22
		----------	Amount	Calc.	%Drift		----------	
52		2-Chloroethyl vinyl ether	500.000	501.072	-0.2	86	-0.02	12.69
		----------	AvgRF	CCRF	%Dev		----------	
53		cis-1,3-Dichloropropene	0.715	0.769	-7.6	97	-0.01	12.82
54	I	Chlorobenzene-d5	1.000	1.000	0.0	95	-0.02	14.74
55	S	Toluene-d8	1.595	1.598	-0.2	95	0.00	13.04
56	C	Toluene	2.501	2.645	-5.8	98	-0.01	13.10
		----------	Amount	Calc.	%Drift		----------	
57		2-Nitropropane	500.000	441.042	11.8	94	-0.02	13.32
		----------	AvgRF	CCRF	%Dev		----------	
58		4-Methyl-2-pentanone	0.719	0.680	5.4	91	-0.02	13.45
		----------	Amount	Calc.	%Drift		----------	
59		trans-1,3-Dichloropropene	100.000	92.564	7.4	96	-0.02	13.52
		----------	AvgRF	CCRF	%Dev		----------	
60		Tetrachloroethene	0.682	0.757	-11.0	105	0.00	13.56
		----------	Amount	Calc.	%Drift		----------	
61		Ethyl methacrylate	100.000	89.136	10.9	94	0.00	13.63
62		1,1,2-Trichloroethane	100.000	91.057	8.9	96	-0.02	13.71
63		Dibromochloromethane	100.000	94.830	5.2	96	-0.02	13.93
64		1,3-Dichloropropane	100.000	90.324	9.7	96	0.00	14.02
65		1,2-Dibromoethane	100.000	92.604	7.4	98	0.00	14.23
		----------	AvgRF	CCRF	%Dev		----------	
66		2-hexanone	0.650	0.632	2.8	91	-0.01	14.35
67		1-Chlorohexane	0.914	1.021	-11.7	101	-0.01	14.67
68	C	Ethylbenzene	2.628	2.773	-5.5	99	-0.01	14.75
69	P	Chlorobenzene	1.401	1.468	-4.8	100	-0.01	14.77
70		1,1,1,2-Tetrachloroethane	0.558	0.604	-8.2	99	-0.01	14.82
71		m,p-Xylene	2.165	2.224	-2.7	99	-0.01	14.90
72		o-Xylene	2.363	2.498	-5.7	97	-0.02	15.36
73		Styrene	1.657	1.788	-7.9	98	-0.01	15.42

Continuing Calibration Summary

Job Number: F78009
Account: TETTNOAK Tetra Tech, Inc
Project: Holloman AFB; Alamogordo, NM

Sample: VH2463-CC2460
Lab FileID: H066136.D

			Amount	Calc.	%Drift			
74	P	Bromoform	100.000	93.479	6.5	93	0.00	15.51
			AvgRF	CCRF	%Dev			
75		Isopropylbenzene	2.305	2.469	-7.1	99	-0.01	15.68
76	I	1,4-Dichlorobenzene-d4	1.000	1.000	0.0	93	-0.01	17.22
77	S	4-Bromofluorobenzene	0.869	0.898	-3.3	95	-0.01	16.03
			Amount	Calc.	%Drift			
78		cis-1,4-Dichloro-2-butene	100.000	88.253	11.7	90	0.00	16.05
			AvgRF	CCRF	%Dev			
79		n-Propylbenzene	5.516	5.795	-5.1	97	-0.01	16.12
80		Bromobenzene	1.108	1.150	-3.8	99	-0.01	16.17
81	P	1,1,2,2-Tetrachloroethane	1.009	0.952	5.6	91	-0.01	16.19
82		1,3,5-Trimethylbenzene	3.738	3.921	-4.9	98	-0.01	16.29
83		2-Chlorotoluene	4.002	4.108	-2.6	97	-0.01	16.33
			Amount	Calc.	%Drift			
84		trans-1,4-Dichloro-2-Bute	100.000	91.930	8.1	87	0.00	16.37
85		1,2,3-Trichloropropane	100.000	98.851	1.1	97	0.00	16.36
			AvgRF	CCRF	%Dev			
86		Cyclohexanone	0.031	0.019	38.7#	57	-0.01	16.45
87		4-Chlorotoluene	3.647	3.802	-4.3	97	-0.01	16.50
88		tert-Butylbenzene	2.474	2.595	-4.9	96	-0.01	16.66
89		1,2,4-Trimethylbenzene	3.516	3.511	0.1	94	-0.01	16.73
90		Pentachloroethane	0.622	0.634	-1.9	97	-0.01	16.74
91		sec-Butylbenzene	4.648	4.862	-4.6	96	-0.01	16.85
92		4-Isopropyltoluene	3.575	3.841	-7.4	98	-0.01	16.97
93		1,3-Dichlorobenzene	2.061	2.175	-5.5	98	-0.01	17.15
94		1,4-Dichlorobenzene	2.128	2.147	-0.9	96	-0.01	17.24
95		n-Butylbenzene	2.358	2.539	-7.7	96	-0.01	17.43
			Amount	Calc.	%Drift			
96		Benzyl Chloride	100.000	99.333	0.7	98	0.00	17.47
			AvgRF	CCRF	%Dev			
97		1,2-Dichlorobenzene	1.984	2.032	-2.4	97	-0.01	17.70
			Amount	Calc.	%Drift			
98		1,2-Dibromo-3-Chloropropa	100.000	90.369	9.6	94	0.00	18.55
			AvgRF	CCRF	%Dev			
99		Hexachlorobutadiene	1.042	1.181	-13.3	101	-0.01	19.20
100		1,2,4-Trichlorobenzene	1.505	1.588	-5.5	98	-0.01	19.28
101		Naphthalene	2.832	2.575	9.1	88	-0.02	19.64
102		1,2,3-Trichlorobenzene	1.353	1.357	-0.3	94	-0.01	19.87
103	I	Tert Butyl Alcohol-d10	1.000	1.000	0.0	98	-0.02	8.02
104		Ethanol	0.298	0.217	27.2#	73	-0.05	6.48
			Amount	Calc.	%Drift			
105		Acrolein	500.000	332.507	33.5#	70	-0.02	7.18
			AvgRF	CCRF	%Dev			
106		Tert Butyl Alcohol	2.553	2.303	9.8	91	-0.01	8.13

Continuing Calibration Summary

Job Number: F78009
Account: TETTNOAK Tetra Tech, Inc
Project: Holloman AFB; Alamogordo, NM

Sample: VH2463-CC2460
Lab FileID: H066136.D

		Amount	Calc.	%Drift			
107	Isobutyl alcohol	2000.000	1775.616	11.2	80	-0.02	10.18
108	Tert Amyl Alcohol	1000.000	920.586	7.9	94	0.00	11.03
109	1,4-Dioxane	2000.000	1642.094	17.9	83	0.00	12.34

(#) = Out of Range SPCC's out = 0 CCC's out = 0
H066004.D APP9-H.M Thu Nov 18 10:14:11 2010

Continuing Calibration Summary

Job Number: F78009
Account: TETTNOAK Tetra Tech, Inc
Project: Holloman AFB; Alamogordo, NM

Sample: VH2464-CC2460
Lab FileID: H066171.D

Evaluate Continuing Calibration Report

```
Data File : H:\HPCHEM\1\DATA\111910\H066171.D            Vial: 1
Acq On    : 19 Nov 2010   9:32 am                     Operator: MikeM
Sample    : cc2460-4                                  Inst    : MSVOA3
Misc      : ms15904,vh2464,5.00,,,,,                  Multiplr: 1.00
MS Integration Params: small.p

Method       : C:\MSDCHEM\1\METHODS\APP9-H.M (RTE Integrator)
Title        : SW-846 Method 5035A/8260B
Last Update  : Mon Nov 15 15:42:44 2010
Response via : Multiple Level Calibration

Min. RRF     :   0.001  Min. Rel. Area :  50%  Max. R.T. Dev  0.50min
Max. RRF Dev :  20%     Max. Rel. Area : 200%
```

		Compound	AvgRF	CCRF	%Dev	Area%	Dev(min)	R.T.
1	I	Fluorobenzene	1.000	1.000	0.0	92	-0.01	11.22
2		Dichlorodifluoromethane	0.229	0.306	-33.6#	131	-0.02	3.95
3	P	Chloromethane	0.495	0.546	-10.3	115	-0.02	4.27
4	C	Vinyl Chloride	0.405	0.455	-12.3	118	-0.02	4.48
		----------	Amount	Calc.	%Drift		----------	
5		Bromomethane	100.000	117.258	-17.3	109	0.00	5.11
6		Chloroethane	100.000	119.300	-19.3	105	-0.02	5.36
		----------	AvgRF	CCRF	%Dev		----------	
7		Trichlorofluoromethane	0.419	0.468	-11.7	107	-0.01	5.63
8		Ethyl Ether	0.312	0.295	5.4	93	-0.01	6.18
9		1,2-Dichlorotrifluoroetha	0.492	0.505	-2.6	99	-0.03	6.53
10	C	1,1-Dichloroethene	0.713	0.747	-4.8	100	-0.02	6.58
11		Freon 113	0.352	0.380	-8.0	108	-0.02	6.69
12		Carbon Disulfide	1.244	1.238	0.5	97	-0.02	6.69
13		Iodomethane	0.547	0.613	-12.1	107	-0.04	6.86
14		Allyl chloride	0.995	1.010	-1.5	91	-0.03	7.39
		----------	Amount	Calc.	%Drift		----------	
15		Methylene Chloride	100.000	92.142	7.9	84	-0.02	7.57
		----------	AvgRF	CCRF	%Dev		----------	
16		Acetone	0.261	0.242	7.3	92	-0.01	7.64
17		Methyl acetate	0.255	0.210	17.6	80	-0.03	7.82
18		trans-1,2-Dichloroethene	0.735	0.775	-5.4	99	-0.03	7.85
19		Hexane	0.397	0.420	-5.8	94	-0.03	7.96
20		Methyl Tert Butyl Ether	0.827	0.796	3.7	92	-0.03	8.00
21		Acetonitrile	0.043	0.037	14.0	79	-0.02	8.39
22		Di-isopropyl ether	1.818	1.734	4.6	88	-0.03	8.57
23		Chloroprene	0.827	0.875	-5.8	100	-0.03	8.77
24	P	1,1-Dichloroethane	0.863	0.885	-2.5	97	-0.02	8.81
25		Acrylonitrile	0.128	0.106	17.2	76	-0.02	8.86
26		ETBE	1.077	1.101	-2.2	96	-0.02	9.12
27		Vinyl acetate	0.898	0.779	13.3	80	-0.02	9.13
28		cis-1,2-Dichloroethene	0.391	0.407	-4.1	97	-0.03	9.59
29		2,2-Dichloropropane	0.636	0.704	-10.7	103	-0.03	9.75
30		Bromochloromethane	0.182	0.197	-8.2	102	-0.02	9.88
31		Cyclohexane	0.828	0.817	1.3	91	-0.02	9.92
32	C	Chloroform	0.801	0.848	-5.9	100	-0.02	9.95
33		Ethyl acetate	0.303	0.537	-77.2#	172	-0.02	10.05
34		Tetrahydrofuran	0.101	0.086	14.9	77	-0.02	10.18

Continuing Calibration Summary

Job Number: F78009
Account: TETTNOAK Tetra Tech, Inc
Project: Holloman AFB; Alamogordo, NM

Sample: VH2464-CC2460
Lab FileID: H066171.D

35	S	Dibromofluoromethane	0.241	0.251	-4.1	99	-0.02	10.19
36		Carbon Tetrachloride	0.598	0.674	-12.7	102	-0.02	10.18
37		1,1,1-Trichloroethane	0.637	0.708	-11.1	103	-0.03	10.25
38		2-Butanone	0.297	0.265	10.8	87	-0.02	10.32
39		1,1-Dichloropropene	0.636	0.671	-5.5	98	-0.02	10.41
		----------	Amount	Calc.	%Drift		----------	
40		Propionitrile	1000.000	970.228	3.0	84	-0.02	10.70
41		Methacrylonitrile	1000.000	1008.614	-0.9	86	-0.02	10.73
		----------	AvgRF	CCRF	%Dev		----------	
42		Benzene	1.492	1.463	1.9	94	-0.02	10.72
43		TAME	0.717	0.710	1.0	92	-0.01	10.82
44	S	1,2-Dichloroethane-d4	0.372	0.379	-1.9	96	-0.02	10.88
45		1,2-Dichloroethane	0.694	0.701	-1.0	94	-0.02	10.96
46		Trichloroethene	0.412	0.431	-4.6	99	-0.02	11.43
47		Methylcyclohexane	0.606	0.638	-5.3	96	-0.02	11.45
48		Dibromomethane	0.216	0.219	-1.4	90	-0.03	11.94
49	C	1,2-Dichloropropane	0.450	0.435	3.3	89	-0.03	12.04
50		Bromodichloromethane	0.587	0.619	-5.5	94	-0.02	12.10
51		Methyl methacrylate	0.463	0.440	5.0	86	-0.02	12.22
		----------	Amount	Calc.	%Drift		----------	
52		2-Chloroethyl vinyl ether	500.000	386.280	22.7#	66	-0.02	12.69
		----------	AvgRF	CCRF	%Dev		----------	
53		cis-1,3-Dichloropropene	0.715	0.729	-2.0	92	-0.02	12.81
54	I	Chlorobenzene-d5	1.000	1.000	0.0	94	-0.02	14.74
55	S	Toluene-d8	1.595	1.593	0.1	94	-0.02	13.03
56	C	Toluene	2.501	2.619	-4.7	97	-0.02	13.08
		----------	Amount	Calc.	%Drift		----------	
57		2-Nitropropane	500.000	414.466	17.1	87	-0.02	13.32
		----------	AvgRF	CCRF	%Dev		----------	
58		4-Methyl-2-pentanone	0.719	0.635	11.7	85	-0.02	13.45
		----------	Amount	Calc.	%Drift		----------	
59		trans-1,3-Dichloropropene	100.000	90.332	9.7	93	-0.02	13.52
		----------	AvgRF	CCRF	%Dev		----------	
60		Tetrachloroethene	0.682	0.755	-10.7	103	-0.02	13.54
		----------	Amount	Calc.	%Drift		----------	
61		Ethyl methacrylate	100.000	82.258	17.7	86	-0.02	13.62
62		1,1,2-Trichloroethane	100.000	86.607	13.4	91	-0.02	13.70
63		Dibromochloromethane	100.000	92.794	7.2	93	-0.02	13.93
64		1,3-Dichloropropane	100.000	85.725	14.3	90	-0.02	14.01
65		1,2-Dibromoethane	100.000	89.200	10.8	94	-0.02	14.22
		----------	AvgRF	CCRF	%Dev		----------	
66		2-hexanone	0.650	0.586	9.8	84	-0.02	14.33
67		1-Chlorohexane	0.914	1.002	-9.6	98	-0.02	14.66
68	C	Ethylbenzene	2.628	2.762	-5.1	98	-0.02	14.74
69	P	Chlorobenzene	1.401	1.452	-3.6	98	-0.02	14.76
70		1,1,1,2-Tetrachloroethane	0.558	0.613	-9.9	99	-0.02	14.81
71		m,p-Xylene	2.165	2.229	-3.0	99	-0.02	14.89
72		o-Xylene	2.363	2.508	-6.1	97	-0.02	15.36
73		Styrene	1.657	1.790	-8.0	97	-0.02	15.41

Continuing Calibration Summary

Job Number: F78009
Account: TETTNOAK Tetra Tech, Inc
Project: Holloman AFB; Alamogordo, NM

Sample: VH2464-CC2460
Lab FileID: H066171.D

			Amount	Calc.	%Drift			
74	P	Bromoform	100.000	94.361	5.6	93	-0.02	15.50
			AvgRF	CCRF	%Dev			
75		Isopropylbenzene	2.305	2.474	-7.3	99	-0.02	15.67
76	I	1,4-Dichlorobenzene-d4	1.000	1.000	0.0	93	-0.02	17.21
77	S	4-Bromofluorobenzene	0.869	0.922	-6.1	97	-0.01	16.03
			Amount	Calc.	%Drift			
78		cis-1,4-Dichloro-2-butene	100.000	86.688	13.3	88	-0.02	16.04
			AvgRF	CCRF	%Dev			
79		n-Propylbenzene	5.516	5.754	-4.3	97	-0.02	16.11
80		Bromobenzene	1.108	1.145	-3.3	99	-0.02	16.16
81	P	1,1,2,2-Tetrachloroethane	1.009	0.900	10.8	86	-0.02	16.18
82		1,3,5-Trimethylbenzene	3.738	3.906	-4.5	98	-0.02	16.28
83		2-Chlorotoluene	4.002	4.040	-0.9	95	-0.02	16.32
			Amount	Calc.	%Drift			
84		trans-1,4-Dichloro-2-Bute	100.000	91.164	8.8	86	-0.02	16.36
85		1,2,3-Trichloropropane	100.000	98.880	1.1	97	-0.02	16.35
			AvgRF	CCRF	%Dev			
86		Cyclohexanone	0.031	0.019	38.7#	58	-0.02	16.44
87		4-Chlorotoluene	3.647	3.754	-2.9	96	-0.02	16.49
88		tert-Butylbenzene	2.474	2.570	-3.9	95	-0.02	16.65
89		1,2,4-Trimethylbenzene	3.516	3.507	0.3	94	-0.02	16.72
90		Pentachloroethane	0.622	0.643	-3.4	99	-0.02	16.73
91		sec-Butylbenzene	4.648	4.816	-3.6	96	-0.02	16.83
92		4-Isopropyltoluene	3.575	3.808	-6.5	98	-0.02	16.96
93		1,3-Dichlorobenzene	2.061	2.098	-1.8	94	-0.02	17.14
94		1,4-Dichlorobenzene	2.128	2.148	-0.9	96	-0.02	17.23
95		n-Butylbenzene	2.358	2.486	-5.4	94	-0.01	17.42
			Amount	Calc.	%Drift			
96		Benzyl Chloride	100.000	91.469	8.5	90	-0.02	17.46
			AvgRF	CCRF	%Dev			
97		1,2-Dichlorobenzene	1.984	1.944	2.0	93	-0.02	17.69
			Amount	Calc.	%Drift			
98		1,2-Dibromo-3-Chloropropa	100.000	78.844	21.2#	82	-0.02	18.54
			AvgRF	CCRF	%Dev			
99		Hexachlorobutadiene	1.042	1.170	-12.3	100	-0.01	19.20
100		1,2,4-Trichlorobenzene	1.505	1.582	-5.1	98	-0.01	19.28
101		Naphthalene	2.832	2.398	15.3	82	-0.02	19.64
102		1,2,3-Trichlorobenzene	1.353	1.322	2.3	91	-0.02	19.86
103	I	Tert Butyl Alcohol-d10	1.000	1.000	0.0	88	-0.03	8.01
104		Ethanol	0.298	0.226	24.2#	68	-0.04	6.49
			Amount	Calc.	%Drift			
105		Acrolein	500.000	682.227	-36.4#	128	-0.04	7.16
			AvgRF	CCRF	%Dev			
106		Tert Butyl Alcohol	2.553	2.385	6.6	84	-0.01	8.12

Continuing Calibration Summary

Job Number: F78009
Account: TETTNOAK Tetra Tech, Inc
Project: Holloman AFB; Alamogordo, NM

Sample: VH2464-CC2460
Lab FileID: H066171.D

		Amount	Calc.	%Drift			
107	Isobutyl alcohol	2000.000	1816.646	9.2	73	-0.02	10.18
108	Tert Amyl Alcohol	1000.000	943.253	5.7	86	-0.02	11.02
109	1,4-Dioxane	2000.000	1472.206	26.4#	66	0.00	12.35

(#) = Out of Range SPCC's out = 0 CCC's out = 0
H066004.D APP9-H.M Fri Nov 19 10:00:27 2010

5.7.15

5

Continuing Calibration Summary

Job Number: F78009
Account: TETTNOAK Tetra Tech, Inc
Project: Holloman AFB; Alamogordo, NM

Sample: VH2465-CC2460
Lab FileID: H066215.D

Evaluate Continuing Calibration Report

```
Data File : H:\HPCHEM\1\DATA\112010\H066215.D            Vial: 1
Acq On    : 20 Nov 2010   6:44 am                     Operator: MikeM
Sample    : cc2460-4                                  Inst    : MSVOA3
Misc      : ms15921,vh2465,5.00,,,,,                  Multiplr: 1.00
MS Integration Params: small.p

Method       : C:\MSDCHEM\1\METHODS\APP9-H.M (RTE Integrator)
Title        : SW-846 Method 5035A/8260B
Last Update  : Mon Nov 15 15:42:44 2010
Response via : Multiple Level Calibration

Min. RRF     :   0.001  Min. Rel. Area :  50%  Max. R.T. Dev  0.50min
Max. RRF Dev :  20%     Max. Rel. Area : 200%
```

		Compound	AvgRF	CCRF	%Dev	Area%	Dev(min)	R.T.
1	I	Fluorobenzene	1.000	1.000	0.0	92	-0.02	11.21
2		Dichlorodifluoromethane	0.229	0.291	-27.1#	124	-0.03	3.94
3	P	Chloromethane	0.495	0.502	-1.4	105	-0.02	4.27
4	C	Vinyl Chloride	0.405	0.400	1.2	103	-0.03	4.47
			Amount	Calc.	%Drift			
5		Bromomethane	100.000	104.084	-4.1	99	0.00	5.11
6		Chloroethane	100.000	112.371	-12.4	101	-0.02	5.36
			AvgRF	CCRF	%Dev			
7		Trichlorofluoromethane	0.419	0.429	-2.4	98	-0.01	5.63
8		Ethyl Ether	0.312	0.322	-3.2	101	-0.02	6.17
9		1,2-Dichlorotrifluoroetha	0.492	0.538	-9.3	106	-0.03	6.53
10	C	1,1-Dichloroethene	0.713	0.777	-9.0	104	-0.01	6.59
11		Freon 113	0.352	0.400	-13.6	113	-0.02	6.69
12		Carbon Disulfide	1.244	1.340	-7.7	104	-0.03	6.68
13		Iodomethane	0.547	0.612	-11.9	107	-0.04	6.85
14		Allyl chloride	0.995	1.101	-10.7	99	-0.02	7.40
			Amount	Calc.	%Drift			
15		Methylene Chloride	100.000	101.286	-1.3	92	-0.02	7.57
			AvgRF	CCRF	%Dev			
16		Acetone	0.261	0.276	-5.7	105	-0.02	7.63
17		Methyl acetate	0.255	0.244	4.3	93	-0.03	7.82
18		trans-1,2-Dichloroethene	0.735	0.809	-10.1	104	-0.03	7.85
19		Hexane	0.397	0.480	-20.9#	107	-0.03	7.96
20		Methyl Tert Butyl Ether	0.827	0.836	-1.1	96	-0.03	8.00
21		Acetonitrile	0.043	0.044	-2.3	93	-0.02	8.39
22		Di-isopropyl ether	1.818	1.927	-6.0	98	-0.02	8.58
23		Chloroprene	0.827	0.938	-13.4	107	-0.03	8.77
24	P	1,1-Dichloroethane	0.863	0.943	-9.3	103	-0.02	8.81
25		Acrylonitrile	0.128	0.120	6.3	86	-0.02	8.86
26		ETBE	1.077	1.104	-2.5	96	-0.03	9.11
27		Vinyl acetate	0.898	0.851	5.2	88	-0.03	9.12
28		cis-1,2-Dichloroethene	0.391	0.436	-11.5	104	-0.03	9.59
29		2,2-Dichloropropane	0.636	0.713	-12.1	105	-0.02	9.76
30		Bromochloromethane	0.182	0.205	-12.6	106	-0.02	9.88
31		Cyclohexane	0.828	0.889	-7.4	99	-0.02	9.92
32	C	Chloroform	0.801	0.871	-8.7	102	-0.02	9.95
33		Ethyl acetate	0.303	0.598	-97.4#	191	-0.03	10.04
34		Tetrahydrofuran	0.101	0.095	5.9	85	-0.03	10.17

Continuing Calibration Summary

Job Number: F78009
Account: TETTNOAK Tetra Tech, Inc
Project: Holloman AFB; Alamogordo, NM

Sample: VH2465-CC2460
Lab FileID: H066215.D

35	S	Dibromofluoromethane	0.241	0.244	-1.2	96	-0.02	10.19
36		Carbon Tetrachloride	0.598	0.675	-12.9	102	-0.02	10.18
37		1,1,1-Trichloroethane	0.637	0.714	-12.1	103	-0.02	10.26
38		2-Butanone	0.297	0.304	-2.4	99	-0.01	10.33
39		1,1-Dichloropropene	0.636	0.704	-10.7	103	-0.03	10.40
		----------	Amount	Calc.	%Drift		----------	
40		Propionitrile	1000.000	1102.494	-10.2	96	-0.02	10.70
41		Methacrylonitrile	1000.000	1134.538	-13.5	96	-0.02	10.73
		----------	AvgRF	CCRF	%Dev		----------	
42		Benzene	1.492	1.565	-4.9	101	-0.02	10.72
43		TAME	0.717	0.720	-0.4	93	-0.02	10.81
44	S	1,2-Dichloroethane-d4	0.372	0.364	2.2	92	-0.02	10.88
45		1,2-Dichloroethane	0.694	0.749	-7.9	100	-0.02	10.96
46		Trichloroethene	0.412	0.454	-10.2	104	-0.02	11.43
47		Methylcyclohexane	0.606	0.695	-14.7	104	-0.02	11.45
48		Dibromomethane	0.216	0.234	-8.3	96	-0.03	11.94
49	C	1,2-Dichloropropane	0.450	0.475	-5.6	97	-0.03	12.04
50		Bromodichloromethane	0.587	0.661	-12.6	101	-0.02	12.10
51		Methyl methacrylate	0.463	0.485	-4.8	94	-0.02	12.22
		----------	Amount	Calc.	%Drift		----------	
52		2-Chloroethyl vinyl ether	500.000	402.207	19.6	69	-0.02	12.69
		----------	AvgRF	CCRF	%Dev		----------	
53		cis-1,3-Dichloropropene	0.715	0.785	-9.8	99	-0.02	12.81
54	I	Chlorobenzene-d5	1.000	1.000	0.0	97	-0.02	14.74
55	S	Toluene-d8	1.595	1.533	3.9	93	-0.02	13.03
56	C	Toluene	2.501	2.643	-5.7	101	-0.02	13.08
		----------	Amount	Calc.	%Drift		----------	
57		2-Nitropropane	500.000	448.663	10.3	98	-0.02	13.32
		----------	AvgRF	CCRF	%Dev		----------	
58		4-Methyl-2-pentanone	0.719	0.706	1.8	97	-0.02	13.45
		----------	Amount	Calc.	%Drift		----------	
59		trans-1,3-Dichloropropene	100.000	94.059	5.9	100	-0.02	13.52
		----------	AvgRF	CCRF	%Dev		----------	
60		Tetrachloroethene	0.682	0.750	-10.0	106	-0.02	13.54
		----------	Amount	Calc.	%Drift		----------	
61		Ethyl methacrylate	100.000	88.795	11.2	96	-0.02	13.62
62		1,1,2-Trichloroethane	100.000	93.232	6.8	101	-0.02	13.70
63		Dibromochloromethane	100.000	97.476	2.5	102	-0.02	13.93
64		1,3-Dichloropropane	100.000	91.895	8.1	100	-0.02	14.01
65		1,2-Dibromoethane	100.000	93.689	6.3	102	-0.02	14.22
		----------	AvgRF	CCRF	%Dev		----------	
66		2-hexanone	0.650	0.642	1.2	95	-0.02	14.33
67		1-Chlorohexane	0.914	1.022	-11.8	104	-0.02	14.66
68	C	Ethylbenzene	2.628	2.827	-7.6	103	-0.02	14.74
69	P	Chlorobenzene	1.401	1.512	-7.9	106	-0.02	14.76
70		1,1,1,2-Tetrachloroethane	0.558	0.626	-12.2	105	-0.02	14.81
71		m,p-Xylene	2.165	2.242	-3.6	102	-0.02	14.89
72		o-Xylene	2.363	2.539	-7.4	102	-0.02	15.36
73		Styrene	1.657	1.822	-10.0	102	-0.02	15.41

Continuing Calibration Summary

Job Number: F78009
Account: TETTNOAK Tetra Tech, Inc
Project: Holloman AFB; Alamogordo, NM

Sample: VH2465-CC2460
Lab FileID: H066215.D

			Amount	Calc.	%Drift			
74	P	Bromoform	100.000	97.406	2.6	100	-0.02	15.50

			AvgRF	CCRF	%Dev			
75		Isopropylbenzene	2.305	2.504	-8.6	103	-0.02	15.67
76	I	1,4-Dichlorobenzene-d4	1.000	1.000	0.0	95	-0.02	17.21
77	S	4-Bromofluorobenzene	0.869	0.907	-4.4	97	-0.02	16.02

			Amount	Calc.	%Drift			
78		cis-1,4-Dichloro-2-butene	100.000	91.013	9.0	94	-0.02	16.04

			AvgRF	CCRF	%Dev			
79		n-Propylbenzene	5.516	6.040	-9.5	103	-0.02	16.11
80		Bromobenzene	1.108	1.189	-7.3	104	-0.02	16.16
81	P	1,1,2,2-Tetrachloroethane	1.009	0.992	1.7	96	-0.02	16.17
82		1,3,5-Trimethylbenzene	3.738	4.081	-9.2	104	-0.02	16.28
83		2-Chlorotoluene	4.002	4.265	-6.6	102	-0.02	16.32

			Amount	Calc.	%Drift			
84		trans-1,4-Dichloro-2-Bute	100.000	99.979	0.0	96	-0.02	16.36
85		1,2,3-Trichloropropane	100.000	99.998	0.0	99	-0.02	16.35

			AvgRF	CCRF	%Dev			
86		Cyclohexanone	0.031	0.021	32.3#	65	-0.02	16.44
87		4-Chlorotoluene	3.647	3.921	-7.5	102	-0.02	16.49
88		tert-Butylbenzene	2.474	2.655	-7.3	100	-0.02	16.65
89		1,2,4-Trimethylbenzene	3.516	3.696	-5.1	100	-0.02	16.72
90		Pentachloroethane	0.622	0.662	-6.4	103	-0.02	16.73
91		sec-Butylbenzene	4.648	5.032	-8.3	101	-0.02	16.83
92		4-Isopropyltoluene	3.575	3.916	-9.5	102	-0.02	16.96
93		1,3-Dichlorobenzene	2.061	2.264	-9.8	103	-0.02	17.14
94		1,4-Dichlorobenzene	2.128	2.272	-6.8	103	-0.02	17.23
95		n-Butylbenzene	2.358	2.591	-9.9	99	-0.01	17.42

			Amount	Calc.	%Drift			
96		Benzyl Chloride	100.000	100.015	-0.0	100	-0.02	17.46

			AvgRF	CCRF	%Dev			
97		1,2-Dichlorobenzene	1.984	2.073	-4.5	100	-0.02	17.69

			Amount	Calc.	%Drift			
98		1,2-Dibromo-3-Chloropropa	100.000	86.550	13.5	91	-0.02	18.54

			AvgRF	CCRF	%Dev			
99		Hexachlorobutadiene	1.042	1.223	-17.4	106	-0.01	19.20
100		1,2,4-Trichlorobenzene	1.505	1.620	-7.6	101	-0.02	19.27
101		Naphthalene	2.832	2.603	8.1	90	-0.02	19.64
102		1,2,3-Trichlorobenzene	1.353	1.383	-2.2	97	-0.02	19.86
103	I	Tert Butyl Alcohol-d10	1.000	1.000	0.0	85	-0.03	8.01
104		Ethanol	0.298	0.346	-16.1	101	-0.05	6.48

			Amount	Calc.	%Drift			
105		Acrolein	500.000	788.810	-57.8#	144	-0.04	7.16

			AvgRF	CCRF	%Dev			
106		Tert Butyl Alcohol	2.553	2.729	-6.9	93	-0.02	8.11

Continuing Calibration Summary

Job Number: F78009
Account: TETTNOAK Tetra Tech, Inc
Project: Holloman AFB; Alamogordo, NM

Sample: VH2465-CC2460
Lab FileID: H066215.D

		Amount	Calc.	%Drift			
107	Isobutyl alcohol	2000.000	2102.085	-5.1	82	-0.03	10.17
108	Tert Amyl Alcohol	1000.000	1043.610	-4.4	93	-0.02	11.02
109	1,4-Dioxane	2000.000	1753.630	12.3	76	-0.02	12.33

(#) = Out of Range SPCC's out = 0 CCC's out = 0
H066004.D APP9-H.M Sat Nov 20 07:17:06 2010

5.7.16

5

Southeast ACCUTEST LABORATORIES

GC/MS Semi-volatiles

QC Data Summaries

Includes the following where applicable:

- Method Blank Summaries
- Blank Spike Summaries
- Matrix Spike and Duplicate Summaries
- Instrument Performance Checks (DFTPP)
- Internal Standard Area Summaries
- Surrogate Recovery Summaries
- Initial and Continuing Calibration Summaries

Method Blank Summary

Job Number: F78009
Account: TETTNOAK Tetra Tech, Inc
Project: Holloman AFB; Alamogordo, NM

Sample	File ID	DF	Analyzed	By	Prep Date	Prep Batch	Analytical Batch
OP35095-MB	U022583.D	1	11/29/10	NAF	11/18/10	OP35095	SU1077

The QC reported here applies to the following samples: **Method:** SW846 8270D

F78009-36, F78009-37

CAS No.	Compound	Result	RL	MDL	Units	Q
65-85-0	Benzoic Acid	ND	50	10	ug/l	
95-57-8	2-Chlorophenol	ND	5.0	0.50	ug/l	
59-50-7	4-Chloro-3-methyl phenol	ND	5.0	0.50	ug/l	
120-83-2	2,4-Dichlorophenol	ND	5.0	0.50	ug/l	
105-67-9	2,4-Dimethylphenol	ND	5.0	1.1	ug/l	
51-28-5	2,4-Dinitrophenol	ND	25	10	ug/l	
534-52-1	4,6-Dinitro-o-cresol	ND	10	2.0	ug/l	
95-48-7	2-Methylphenol	ND	5.0	0.54	ug/l	
	3&4-Methylphenol	ND	5.0	1.1	ug/l	
88-75-5	2-Nitrophenol	ND	5.0	0.54	ug/l	
100-02-7	4-Nitrophenol	ND	25	5.0	ug/l	
87-86-5	Pentachlorophenol	ND	25	5.4	ug/l	
108-95-2	Phenol	ND	5.0	0.50	ug/l	
95-95-4	2,4,5-Trichlorophenol	ND	5.0	0.50	ug/l	
88-06-2	2,4,6-Trichlorophenol	ND	5.0	0.50	ug/l	
83-32-9	Acenaphthene	ND	5.0	0.50	ug/l	
208-96-8	Acenaphthylene	ND	5.0	0.50	ug/l	
62-53-3	Aniline	ND	5.0	0.52	ug/l	
120-12-7	Anthracene	ND	5.0	0.50	ug/l	
92-87-5	Benzidine	ND	25	4.7	ug/l	
56-55-3	Benzo(a)anthracene	ND	5.0	0.50	ug/l	
50-32-8	Benzo(a)pyrene	ND	5.0	0.50	ug/l	
205-99-2	Benzo(b)fluoranthene	ND	5.0	0.50	ug/l	
191-24-2	Benzo(g,h,i)perylene	ND	5.0	0.50	ug/l	
207-08-9	Benzo(k)fluoranthene	ND	5.0	0.50	ug/l	
101-55-3	4-Bromophenyl phenyl ether	ND	5.0	0.50	ug/l	
85-68-7	Butyl benzyl phthalate	ND	5.0	1.1	ug/l	
100-51-6	Benzyl Alcohol	ND	5.0	1.0	ug/l	
91-58-7	2-Chloronaphthalene	ND	5.0	0.50	ug/l	
106-47-8	4-Chloroaniline	ND	5.0	0.50	ug/l	
86-74-8	Carbazole	ND	5.0	0.50	ug/l	
218-01-9	Chrysene	ND	5.0	0.50	ug/l	
111-91-1	bis(2-Chloroethoxy)methane	ND	5.0	0.50	ug/l	
111-44-4	bis(2-Chloroethyl)ether	ND	5.0	0.54	ug/l	
108-60-1	bis(2-Chloroisopropyl)ether	ND	5.0	0.54	ug/l	
7005-72-3	4-Chlorophenyl phenyl ether	ND	5.0	0.50	ug/l	

Method Blank Summary

Job Number: F78009
Account: TETTNOAK Tetra Tech, Inc
Project: Holloman AFB; Alamogordo, NM

Sample	File ID	DF	Analyzed	By	Prep Date	Prep Batch	Analytical Batch
OP35095-MB	U022583.D	1	11/29/10	NAF	11/18/10	OP35095	SU1077

The QC reported here applies to the following samples: **Method:** SW846 8270D

F78009-36, F78009-37

CAS No.	Compound	Result	RL	MDL	Units	Q
95-50-1	1,2-Dichlorobenzene	ND	5.0	1.0	ug/l	
122-66-7	1,2-Diphenylhydrazine	ND	5.0	0.50	ug/l	
541-73-1	1,3-Dichlorobenzene	ND	5.0	1.0	ug/l	
106-46-7	1,4-Dichlorobenzene	ND	5.0	1.0	ug/l	
121-14-2	2,4-Dinitrotoluene	ND	5.0	0.50	ug/l	
606-20-2	2,6-Dinitrotoluene	ND	5.0	0.50	ug/l	
91-94-1	3,3'-Dichlorobenzidine	ND	10	1.0	ug/l	
53-70-3	Dibenzo(a,h)anthracene	ND	5.0	0.52	ug/l	
132-64-9	Dibenzofuran	ND	5.0	0.50	ug/l	
84-74-2	Di-n-butyl phthalate	ND	5.0	0.87	ug/l	
117-84-0	Di-n-octyl phthalate	ND	5.0	1.1	ug/l	
84-66-2	Diethyl phthalate	ND	5.0	1.1	ug/l	
131-11-3	Dimethyl phthalate	ND	5.0	0.99	ug/l	
117-81-7	bis(2-Ethylhexyl)phthalate	ND	5.0	1.1	ug/l	
206-44-0	Fluoranthene	ND	5.0	0.50	ug/l	
86-73-7	Fluorene	ND	5.0	0.50	ug/l	
118-74-1	Hexachlorobenzene	ND	5.0	0.56	ug/l	
87-68-3	Hexachlorobutadiene	ND	5.0	1.0	ug/l	
77-47-4	Hexachlorocyclopentadiene	ND	10	1.9	ug/l	
67-72-1	Hexachloroethane	ND	5.0	1.0	ug/l	
193-39-5	Indeno(1,2,3-cd)pyrene	ND	5.0	0.50	ug/l	
78-59-1	Isophorone	ND	5.0	0.50	ug/l	
90-12-0	1-Methylnaphthalene	ND	5.0	0.50	ug/l	
91-57-6	2-Methylnaphthalene	ND	5.0	0.57	ug/l	
88-74-4	2-Nitroaniline	ND	5.0	0.50	ug/l	
99-09-2	3-Nitroaniline	ND	5.0	0.50	ug/l	
100-01-6	4-Nitroaniline	ND	5.0	0.50	ug/l	
91-20-3	Naphthalene	ND	5.0	0.80	ug/l	
98-95-3	Nitrobenzene	ND	5.0	0.59	ug/l	
62-75-9	N-Nitrosodimethylamine	ND	5.0	2.4	ug/l	
621-64-7	N-Nitroso-di-n-propylamine	ND	5.0	0.50	ug/l	
86-30-6	N-Nitrosodiphenylamine	ND	5.0	1.0	ug/l	
85-01-8	Phenanthrene	ND	5.0	0.50	ug/l	
129-00-0	Pyrene	ND	5.0	0.50	ug/l	
110-86-1	Pyridine	ND	10	1.6	ug/l	
120-82-1	1,2,4-Trichlorobenzene	ND	5.0	0.50	ug/l	

Method Blank Summary

Job Number: F78009
Account: TETTNOAK Tetra Tech, Inc
Project: Holloman AFB; Alamogordo, NM

Sample	File ID	DF	Analyzed	By	Prep Date	Prep Batch	Analytical Batch
OP35095-MB	U022583.D	1	11/29/10	NAF	11/18/10	OP35095	SU1077

The QC reported here applies to the following samples: **Method:** SW846 8270D

F78009-36, F78009-37

CAS No.	Surrogate Recoveries		Limits
367-12-4	2-Fluorophenol	37%	14-62%
4165-62-2	Phenol-d5	23%	10-40%
118-79-6	2,4,6-Tribromophenol	78%	33-118%
4165-60-0	Nitrobenzene-d5	79%	42-108%
321-60-8	2-Fluorobiphenyl	70%	40-106%
1718-51-0	Terphenyl-d14	86%	39-121%

CAS No.	Tentatively Identified Compounds	R.T.	Est. Conc.	Units	Q
	unknown	20.81	8.5	ug/l	J
	unknown	21.68	12	ug/l	J
	Total TIC, Semi-Volatile		20.5	ug/l	J

Method Blank Summary

Job Number: F78009
Account: TETTNOAK Tetra Tech, Inc
Project: Holloman AFB; Alamogordo, NM

Sample	File ID	DF	Analyzed	By	Prep Date	Prep Batch	Analytical Batch
OP35095-MB	L049154.D	1	11/30/10	NAF	11/18/10	OP35095	SL2518

The QC reported here applies to the following samples: **Method:** SW846 8270D

F78009-36, F78009-37

CAS No.	Compound	Result	RL	MDL	Units	Q
65-85-0	Benzoic Acid	ND	50	10	ug/l	
95-57-8	2-Chlorophenol	ND	5.0	0.50	ug/l	
59-50-7	4-Chloro-3-methyl phenol	ND	5.0	0.50	ug/l	
120-83-2	2,4-Dichlorophenol	ND	5.0	0.50	ug/l	
105-67-9	2,4-Dimethylphenol	ND	5.0	1.1	ug/l	
51-28-5	2,4-Dinitrophenol	ND	25	10	ug/l	
534-52-1	4,6-Dinitro-o-cresol	ND	10	2.0	ug/l	
95-48-7	2-Methylphenol	ND	5.0	0.54	ug/l	
	3&4-Methylphenol	ND	5.0	1.1	ug/l	
88-75-5	2-Nitrophenol	ND	5.0	0.54	ug/l	
100-02-7	4-Nitrophenol	ND	25	5.0	ug/l	
87-86-5	Pentachlorophenol	ND	25	5.4	ug/l	
108-95-2	Phenol	ND	5.0	0.50	ug/l	
95-95-4	2,4,5-Trichlorophenol	ND	5.0	0.50	ug/l	
88-06-2	2,4,6-Trichlorophenol	ND	5.0	0.50	ug/l	
83-32-9	Acenaphthene	ND	5.0	0.50	ug/l	
208-96-8	Acenaphthylene	ND	5.0	0.50	ug/l	
62-53-3	Aniline	ND	5.0	0.52	ug/l	
120-12-7	Anthracene	ND	5.0	0.50	ug/l	
92-87-5	Benzidine	ND	25	4.7	ug/l	
56-55-3	Benzo(a)anthracene	ND	5.0	0.50	ug/l	
50-32-8	Benzo(a)pyrene	ND	5.0	0.50	ug/l	
205-99-2	Benzo(b)fluoranthene	ND	5.0	0.50	ug/l	
191-24-2	Benzo(g,h,i)perylene	ND	5.0	0.50	ug/l	
207-08-9	Benzo(k)fluoranthene	ND	5.0	0.50	ug/l	
101-55-3	4-Bromophenyl phenyl ether	ND	5.0	0.50	ug/l	
85-68-7	Butyl benzyl phthalate	ND	5.0	1.1	ug/l	
100-51-6	Benzyl Alcohol	ND	5.0	1.0	ug/l	
91-58-7	2-Chloronaphthalene	ND	5.0	0.50	ug/l	
106-47-8	4-Chloroaniline	ND	5.0	0.50	ug/l	
86-74-8	Carbazole	ND	5.0	0.50	ug/l	
218-01-9	Chrysene	ND	5.0	0.50	ug/l	
111-91-1	bis(2-Chloroethoxy)methane	ND	5.0	0.50	ug/l	
111-44-4	bis(2-Chloroethyl)ether	ND	5.0	0.54	ug/l	
108-60-1	bis(2-Chloroisopropyl)ether	ND	5.0	0.54	ug/l	
7005-72-3	4-Chlorophenyl phenyl ether	ND	5.0	0.50	ug/l	

Method Blank Summary

Job Number: F78009
Account: TETTNOAK Tetra Tech, Inc
Project: Holloman AFB; Alamogordo, NM

Sample	File ID	DF	Analyzed	By	Prep Date	Prep Batch	Analytical Batch
OP35095-MB	L049154.D	1	11/30/10	NAF	11/18/10	OP35095	SL2518

The QC reported here applies to the following samples: **Method:** SW846 8270D

F78009-36, F78009-37

CAS No.	Compound	Result	RL	MDL	Units	Q
95-50-1	1,2-Dichlorobenzene	ND	5.0	1.0	ug/l	
122-66-7	1,2-Diphenylhydrazine	ND	5.0	0.50	ug/l	
541-73-1	1,3-Dichlorobenzene	ND	5.0	1.0	ug/l	
106-46-7	1,4-Dichlorobenzene	ND	5.0	1.0	ug/l	
121-14-2	2,4-Dinitrotoluene	ND	5.0	0.50	ug/l	
606-20-2	2,6-Dinitrotoluene	ND	5.0	0.50	ug/l	
91-94-1	3,3'-Dichlorobenzidine	ND	10	1.0	ug/l	
53-70-3	Dibenzo(a,h)anthracene	ND	5.0	0.52	ug/l	
132-64-9	Dibenzofuran	ND	5.0	0.50	ug/l	
84-74-2	Di-n-butyl phthalate	ND	5.0	0.87	ug/l	
117-84-0	Di-n-octyl phthalate	ND	5.0	1.1	ug/l	
84-66-2	Diethyl phthalate	ND	5.0	1.1	ug/l	
131-11-3	Dimethyl phthalate	ND	5.0	0.99	ug/l	
117-81-7	bis(2-Ethylhexyl)phthalate	ND	5.0	1.1	ug/l	
206-44-0	Fluoranthene	ND	5.0	0.50	ug/l	
86-73-7	Fluorene	ND	5.0	0.50	ug/l	
118-74-1	Hexachlorobenzene	ND	5.0	0.56	ug/l	
87-68-3	Hexachlorobutadiene	ND	5.0	1.0	ug/l	
77-47-4	Hexachlorocyclopentadiene	ND	10	1.9	ug/l	
67-72-1	Hexachloroethane	ND	5.0	1.0	ug/l	
193-39-5	Indeno(1,2,3-cd)pyrene	ND	5.0	0.50	ug/l	
78-59-1	Isophorone	ND	5.0	0.50	ug/l	
90-12-0	1-Methylnaphthalene	ND	5.0	0.50	ug/l	
91-57-6	2-Methylnaphthalene	ND	5.0	0.57	ug/l	
88-74-4	2-Nitroaniline	ND	5.0	0.50	ug/l	
99-09-2	3-Nitroaniline	ND	5.0	0.50	ug/l	
100-01-6	4-Nitroaniline	ND	5.0	0.50	ug/l	
91-20-3	Naphthalene	ND	5.0	0.80	ug/l	
98-95-3	Nitrobenzene	ND	5.0	0.59	ug/l	
62-75-9	N-Nitrosodimethylamine	ND	5.0	2.4	ug/l	
621-64-7	N-Nitroso-di-n-propylamine	ND	5.0	0.50	ug/l	
86-30-6	N-Nitrosodiphenylamine	ND	5.0	1.0	ug/l	
85-01-8	Phenanthrene	ND	5.0	0.50	ug/l	
129-00-0	Pyrene	ND	5.0	0.50	ug/l	
110-86-1	Pyridine	ND	10	1.6	ug/l	
120-82-1	1,2,4-Trichlorobenzene	ND	5.0	0.50	ug/l	

Method Blank Summary

Job Number: F78009
Account: TETTNOAK Tetra Tech, Inc
Project: Holloman AFB; Alamogordo, NM

Sample	File ID	DF	Analyzed	By	Prep Date	Prep Batch	Analytical Batch
OP35095-MB	L049154.D	1	11/30/10	NAF	11/18/10	OP35095	SL2518

The QC reported here applies to the following samples: **Method:** SW846 8270D

F78009-36, F78009-37

CAS No.	Surrogate Recoveries		Limits
367-12-4	2-Fluorophenol	40%	14-62%
4165-62-2	Phenol-d5	25%	10-40%
118-79-6	2,4,6-Tribromophenol	83%	33-118%
4165-60-0	Nitrobenzene-d5	74%	42-108%
321-60-8	2-Fluorobiphenyl	76%	40-106%
1718-51-0	Terphenyl-d14	79%	39-121%

CAS No.	Tentatively Identified Compounds	R.T.	Est. Conc.	Units	Q
	Total TIC, Semi-Volatile [a]		0	ug/l	

(a) No TICs detected.

Method Blank Summary

Job Number: F78009
Account: TETTNOAK Tetra Tech, Inc
Project: Holloman AFB; Alamogordo, NM

Sample	File ID	DF	Analyzed	By	Prep Date	Prep Batch	Analytical Batch
OP35095-MB	X015441.D	1	11/30/10	MG	11/18/10	OP35095	SX769

The QC reported here applies to the following samples: **Method:** SW846 8270D

F78009-36, F78009-37

CAS No.	Compound	Result	RL	MDL	Units	Q
65-85-0	Benzoic Acid	ND	50	10	ug/l	
95-57-8	2-Chlorophenol	ND	5.0	0.50	ug/l	
59-50-7	4-Chloro-3-methyl phenol	ND	5.0	0.50	ug/l	
120-83-2	2,4-Dichlorophenol	ND	5.0	0.50	ug/l	
105-67-9	2,4-Dimethylphenol	ND	5.0	1.1	ug/l	
51-28-5	2,4-Dinitrophenol	ND	25	10	ug/l	
534-52-1	4,6-Dinitro-o-cresol	ND	10	2.0	ug/l	
95-48-7	2-Methylphenol	ND	5.0	0.54	ug/l	
	3&4-Methylphenol	ND	5.0	1.1	ug/l	
88-75-5	2-Nitrophenol	ND	5.0	0.54	ug/l	
100-02-7	4-Nitrophenol	ND	25	5.0	ug/l	
87-86-5	Pentachlorophenol	ND	25	5.4	ug/l	
108-95-2	Phenol	ND	5.0	0.50	ug/l	
95-95-4	2,4,5-Trichlorophenol	ND	5.0	0.50	ug/l	
88-06-2	2,4,6-Trichlorophenol	ND	5.0	0.50	ug/l	
83-32-9	Acenaphthene	ND	5.0	0.50	ug/l	
208-96-8	Acenaphthylene	ND	5.0	0.50	ug/l	
62-53-3	Aniline	ND	5.0	0.52	ug/l	
120-12-7	Anthracene	ND	5.0	0.50	ug/l	
92-87-5	Benzidine	ND	25	4.7	ug/l	
56-55-3	Benzo(a)anthracene	ND	5.0	0.50	ug/l	
50-32-8	Benzo(a)pyrene	ND	5.0	0.50	ug/l	
205-99-2	Benzo(b)fluoranthene	ND	5.0	0.50	ug/l	
191-24-2	Benzo(g,h,i)perylene	ND	5.0	0.50	ug/l	
207-08-9	Benzo(k)fluoranthene	ND	5.0	0.50	ug/l	
101-55-3	4-Bromophenyl phenyl ether	ND	5.0	0.50	ug/l	
85-68-7	Butyl benzyl phthalate	ND	5.0	1.1	ug/l	
100-51-6	Benzyl Alcohol	ND	5.0	1.0	ug/l	
91-58-7	2-Chloronaphthalene	ND	5.0	0.50	ug/l	
106-47-8	4-Chloroaniline	ND	5.0	0.50	ug/l	
86-74-8	Carbazole	ND	5.0	0.50	ug/l	
218-01-9	Chrysene	ND	5.0	0.50	ug/l	
111-91-1	bis(2-Chloroethoxy)methane	ND	5.0	0.50	ug/l	
111-44-4	bis(2-Chloroethyl)ether	ND	5.0	0.54	ug/l	
108-60-1	bis(2-Chloroisopropyl)ether	ND	5.0	0.54	ug/l	
7005-72-3	4-Chlorophenyl phenyl ether	ND	5.0	0.50	ug/l	

Method Blank Summary

Job Number: F78009
Account: TETTNOAK Tetra Tech, Inc
Project: Holloman AFB; Alamogordo, NM

Sample	File ID	DF	Analyzed	By	Prep Date	Prep Batch	Analytical Batch
OP35095-MB	X015441.D	1	11/30/10	MG	11/18/10	OP35095	SX769

The QC reported here applies to the following samples: **Method:** SW846 8270D

F78009-36, F78009-37

CAS No.	Compound	Result	RL	MDL	Units	Q
95-50-1	1,2-Dichlorobenzene	ND	5.0	1.0	ug/l	
122-66-7	1,2-Diphenylhydrazine	ND	5.0	0.50	ug/l	
541-73-1	1,3-Dichlorobenzene	ND	5.0	1.0	ug/l	
106-46-7	1,4-Dichlorobenzene	ND	5.0	1.0	ug/l	
121-14-2	2,4-Dinitrotoluene	ND	5.0	0.50	ug/l	
606-20-2	2,6-Dinitrotoluene	ND	5.0	0.50	ug/l	
91-94-1	3,3'-Dichlorobenzidine	ND	10	1.0	ug/l	
53-70-3	Dibenzo(a,h)anthracene	ND	5.0	0.52	ug/l	
132-64-9	Dibenzofuran	ND	5.0	0.50	ug/l	
84-74-2	Di-n-butyl phthalate	ND	5.0	0.87	ug/l	
117-84-0	Di-n-octyl phthalate	ND	5.0	1.1	ug/l	
84-66-2	Diethyl phthalate	ND	5.0	1.1	ug/l	
131-11-3	Dimethyl phthalate	ND	5.0	0.99	ug/l	
117-81-7	bis(2-Ethylhexyl)phthalate	ND	5.0	1.1	ug/l	
206-44-0	Fluoranthene	ND	5.0	0.50	ug/l	
86-73-7	Fluorene	ND	5.0	0.50	ug/l	
118-74-1	Hexachlorobenzene	ND	5.0	0.56	ug/l	
87-68-3	Hexachlorobutadiene	ND	5.0	1.0	ug/l	
77-47-4	Hexachlorocyclopentadiene	ND	10	1.9	ug/l	
67-72-1	Hexachloroethane	ND	5.0	1.0	ug/l	
193-39-5	Indeno(1,2,3-cd)pyrene	ND	5.0	0.50	ug/l	
78-59-1	Isophorone	ND	5.0	0.50	ug/l	
90-12-0	1-Methylnaphthalene	ND	5.0	0.50	ug/l	
91-57-6	2-Methylnaphthalene	ND	5.0	0.57	ug/l	
88-74-4	2-Nitroaniline	ND	5.0	0.50	ug/l	
99-09-2	3-Nitroaniline	ND	5.0	0.50	ug/l	
100-01-6	4-Nitroaniline	ND	5.0	0.50	ug/l	
91-20-3	Naphthalene	ND	5.0	0.80	ug/l	
98-95-3	Nitrobenzene	ND	5.0	0.59	ug/l	
62-75-9	N-Nitrosodimethylamine	ND	5.0	2.4	ug/l	
621-64-7	N-Nitroso-di-n-propylamine	ND	5.0	0.50	ug/l	
86-30-6	N-Nitrosodiphenylamine	ND	5.0	1.0	ug/l	
85-01-8	Phenanthrene	ND	5.0	0.50	ug/l	
129-00-0	Pyrene	ND	5.0	0.50	ug/l	
110-86-1	Pyridine	ND	10	1.6	ug/l	
120-82-1	1,2,4-Trichlorobenzene	ND	5.0	0.50	ug/l	

Method Blank Summary

Job Number: F78009
Account: TETTNOAK Tetra Tech, Inc
Project: Holloman AFB; Alamogordo, NM

Sample	File ID	DF	Analyzed	By	Prep Date	Prep Batch	Analytical Batch
OP35095-MB	X015441.D	1	11/30/10	MG	11/18/10	OP35095	SX769

The QC reported here applies to the following samples: **Method:** SW846 8270D

F78009-36, F78009-37

CAS No.	Surrogate Recoveries		Limits
367-12-4	2-Fluorophenol	36%	14-62%
4165-62-2	Phenol-d5	22%	10-40%
118-79-6	2,4,6-Tribromophenol	76%	33-118%
4165-60-0	Nitrobenzene-d5	68%	42-108%
321-60-8	2-Fluorobiphenyl	70%	40-106%
1718-51-0	Terphenyl-d14	84%	39-121%

CAS No.	Tentatively Identified Compounds	R.T.	Est. Conc.	Units	Q
	unknown	21.35	12	ug/l	J
	Total TIC, Semi-Volatile		12	ug/l	J

Method Blank Summary

Job Number: F78009
Account: TETTNOAK Tetra Tech, Inc
Project: Holloman AFB; Alamogordo, NM

Sample	File ID	DF	Analyzed	By	Prep Date	Prep Batch	Analytical Batch
OP35095-MB	X015478.D	1	12/01/10	MG	11/18/10	OP35095	SX770

The QC reported here applies to the following samples: **Method:** SW846 8270D

F78009-36, F78009-37

CAS No.	Compound	Result	RL	MDL	Units	Q
65-85-0	Benzoic Acid	ND	50	10	ug/l	
95-57-8	2-Chlorophenol	ND	5.0	0.50	ug/l	
59-50-7	4-Chloro-3-methyl phenol	ND	5.0	0.50	ug/l	
120-83-2	2,4-Dichlorophenol	ND	5.0	0.50	ug/l	
105-67-9	2,4-Dimethylphenol	ND	5.0	1.1	ug/l	
51-28-5	2,4-Dinitrophenol	ND	25	10	ug/l	
534-52-1	4,6-Dinitro-o-cresol	ND	10	2.0	ug/l	
95-48-7	2-Methylphenol	ND	5.0	0.54	ug/l	
	3&4-Methylphenol	ND	5.0	1.1	ug/l	
88-75-5	2-Nitrophenol	ND	5.0	0.54	ug/l	
100-02-7	4-Nitrophenol	ND	25	5.0	ug/l	
87-86-5	Pentachlorophenol	ND	25	5.4	ug/l	
108-95-2	Phenol	ND	5.0	0.50	ug/l	
95-95-4	2,4,5-Trichlorophenol	ND	5.0	0.50	ug/l	
88-06-2	2,4,6-Trichlorophenol	ND	5.0	0.50	ug/l	
83-32-9	Acenaphthene	ND	5.0	0.50	ug/l	
208-96-8	Acenaphthylene	ND	5.0	0.50	ug/l	
62-53-3	Aniline	ND	5.0	0.52	ug/l	
120-12-7	Anthracene	ND	5.0	0.50	ug/l	
92-87-5	Benzidine	ND	25	4.7	ug/l	
56-55-3	Benzo(a)anthracene	ND	5.0	0.50	ug/l	
50-32-8	Benzo(a)pyrene	ND	5.0	0.50	ug/l	
205-99-2	Benzo(b)fluoranthene	ND	5.0	0.50	ug/l	
191-24-2	Benzo(g,h,i)perylene	ND	5.0	0.50	ug/l	
207-08-9	Benzo(k)fluoranthene	ND	5.0	0.50	ug/l	
101-55-3	4-Bromophenyl phenyl ether	ND	5.0	0.50	ug/l	
85-68-7	Butyl benzyl phthalate	ND	5.0	1.1	ug/l	
100-51-6	Benzyl Alcohol	ND	5.0	1.0	ug/l	
91-58-7	2-Chloronaphthalene	ND	5.0	0.50	ug/l	
106-47-8	4-Chloroaniline	ND	5.0	0.50	ug/l	
86-74-8	Carbazole	ND	5.0	0.50	ug/l	
218-01-9	Chrysene	ND	5.0	0.50	ug/l	
111-91-1	bis(2-Chloroethoxy)methane	ND	5.0	0.50	ug/l	
111-44-4	bis(2-Chloroethyl)ether	ND	5.0	0.54	ug/l	
108-60-1	bis(2-Chloroisopropyl)ether	ND	5.0	0.54	ug/l	
7005-72-3	4-Chlorophenyl phenyl ether	ND	5.0	0.50	ug/l	

Method Blank Summary

Job Number: F78009
Account: TETTNOAK Tetra Tech, Inc
Project: Holloman AFB; Alamogordo, NM

Sample	File ID	DF	Analyzed	By	Prep Date	Prep Batch	Analytical Batch
OP35095-MB	X015478.D	1	12/01/10	MG	11/18/10	OP35095	SX770

The QC reported here applies to the following samples: **Method:** SW846 8270D

F78009-36, F78009-37

CAS No.	Compound	Result	RL	MDL	Units	Q
95-50-1	1,2-Dichlorobenzene	ND	5.0	1.0	ug/l	
122-66-7	1,2-Diphenylhydrazine	ND	5.0	0.50	ug/l	
541-73-1	1,3-Dichlorobenzene	ND	5.0	1.0	ug/l	
106-46-7	1,4-Dichlorobenzene	ND	5.0	1.0	ug/l	
121-14-2	2,4-Dinitrotoluene	ND	5.0	0.50	ug/l	
606-20-2	2,6-Dinitrotoluene	ND	5.0	0.50	ug/l	
91-94-1	3,3'-Dichlorobenzidine	ND	10	1.0	ug/l	
53-70-3	Dibenzo(a,h)anthracene	ND	5.0	0.52	ug/l	
132-64-9	Dibenzofuran	ND	5.0	0.50	ug/l	
84-74-2	Di-n-butyl phthalate	ND	5.0	0.87	ug/l	
117-84-0	Di-n-octyl phthalate	ND	5.0	1.1	ug/l	
84-66-2	Diethyl phthalate	ND	5.0	1.1	ug/l	
131-11-3	Dimethyl phthalate	ND	5.0	0.99	ug/l	
117-81-7	bis(2-Ethylhexyl)phthalate	ND	5.0	1.1	ug/l	
206-44-0	Fluoranthene	ND	5.0	0.50	ug/l	
86-73-7	Fluorene	ND	5.0	0.50	ug/l	
118-74-1	Hexachlorobenzene	ND	5.0	0.56	ug/l	
87-68-3	Hexachlorobutadiene	ND	5.0	1.0	ug/l	
77-47-4	Hexachlorocyclopentadiene	ND	10	1.9	ug/l	
67-72-1	Hexachloroethane	ND	5.0	1.0	ug/l	
193-39-5	Indeno(1,2,3-cd)pyrene	ND	5.0	0.50	ug/l	
78-59-1	Isophorone	ND	5.0	0.50	ug/l	
90-12-0	1-Methylnaphthalene	ND	5.0	0.50	ug/l	
91-57-6	2-Methylnaphthalene	ND	5.0	0.57	ug/l	
88-74-4	2-Nitroaniline	ND	5.0	0.50	ug/l	
99-09-2	3-Nitroaniline	ND	5.0	0.50	ug/l	
100-01-6	4-Nitroaniline	ND	5.0	0.50	ug/l	
91-20-3	Naphthalene	ND	5.0	0.80	ug/l	
98-95-3	Nitrobenzene	ND	5.0	0.59	ug/l	
62-75-9	N-Nitrosodimethylamine	ND	5.0	2.4	ug/l	
621-64-7	N-Nitroso-di-n-propylamine	ND	5.0	0.50	ug/l	
86-30-6	N-Nitrosodiphenylamine	ND	5.0	1.0	ug/l	
85-01-8	Phenanthrene	ND	5.0	0.50	ug/l	
129-00-0	Pyrene	ND	5.0	0.50	ug/l	
110-86-1	Pyridine	ND	10	1.6	ug/l	
120-82-1	1,2,4-Trichlorobenzene	ND	5.0	0.50	ug/l	

Method Blank Summary

Job Number: F78009
Account: TETTNOAK Tetra Tech, Inc
Project: Holloman AFB; Alamogordo, NM

Sample	File ID	DF	Analyzed	By	Prep Date	Prep Batch	Analytical Batch
OP35095-MB	X015478.D	1	12/01/10	MG	11/18/10	OP35095	SX770

The QC reported here applies to the following samples: **Method:** SW846 8270D

F78009-36, F78009-37

CAS No.	Surrogate Recoveries		Limits
367-12-4	2-Fluorophenol	37%	14-62%
4165-62-2	Phenol-d5	22%	10-40%
118-79-6	2,4,6-Tribromophenol	86%	33-118%
4165-60-0	Nitrobenzene-d5	68%	42-108%
321-60-8	2-Fluorobiphenyl	73%	40-106%
1718-51-0	Terphenyl-d14	77%	39-121%

CAS No.	Tentatively Identified Compounds	R.T.	Est. Conc.	Units	Q
	Total TIC, Semi-Volatile [a]		0	ug/l	

(a) No TICs detected.

Blank Spike Summary

Job Number: F78009
Account: TETTNOAK Tetra Tech, Inc
Project: Holloman AFB; Alamogordo, NM

Sample	File ID	DF	Analyzed	By	Prep Date	Prep Batch	Analytical Batch
OP35095-BS	U022582.D	1	11/29/10	NAF	11/18/10	OP35095	SU1077

The QC reported here applies to the following samples: **Method:** SW846 8270D

F78009-36, F78009-37

CAS No.	Compound	Spike ug/l	BSP ug/l	BSP %	Limits
65-85-0	Benzoic Acid	100	34.7	35	10-50
95-57-8	2-Chlorophenol	50	37.7	75	44-103
59-50-7	4-Chloro-3-methyl phenol	50	47.6	95	53-105
120-83-2	2,4-Dichlorophenol	50	47.3	95	53-108
105-67-9	2,4-Dimethylphenol	50	38.1	76	37-91
51-28-5	2,4-Dinitrophenol	100	91.8	92	37-111
534-52-1	4,6-Dinitro-o-cresol	100	95.8	96	62-115
95-48-7	2-Methylphenol	50	33.5	67	35-91
	3&4-Methylphenol	100	60.4	60	32-85
88-75-5	2-Nitrophenol	50	48.8	98	49-111
100-02-7	4-Nitrophenol	100	33.1	33	13-55
87-86-5	Pentachlorophenol	100	91.9	92	57-118
108-95-2	Phenol	50	17.7	35	13-54
95-95-4	2,4,5-Trichlorophenol	50	42.7	85	59-106
88-06-2	2,4,6-Trichlorophenol	50	42.3	85	58-107
83-32-9	Acenaphthene	50	42.0	84	58-106
208-96-8	Acenaphthylene	50	41.6	83	58-105
62-53-3	Aniline	50	35.5	71	43-98
120-12-7	Anthracene	50	43.9	88	65-108
92-87-5	Benzidine	50	28.0	56	15-73
56-55-3	Benzo(a)anthracene	50	44.9	90	63-111
50-32-8	Benzo(a)pyrene	50	44.5	89	62-106
205-99-2	Benzo(b)fluoranthene	50	49.0	98	63-109
191-24-2	Benzo(g,h,i)perylene	50	45.8	92	61-111
207-08-9	Benzo(k)fluoranthene	50	40.3	81	64-111
101-55-3	4-Bromophenyl phenyl ether	50	43.5	87	64-107
85-68-7	Butyl benzyl phthalate	50	42.5	85	59-114
100-51-6	Benzyl Alcohol	50	33.4	67	34-98
91-58-7	2-Chloronaphthalene	50	39.4	79	54-105
106-47-8	4-Chloroaniline	50	44.0	88	53-103
86-74-8	Carbazole	50	42.4	85	66-109
218-01-9	Chrysene	50	43.2	86	64-111
111-91-1	bis(2-Chloroethoxy)methane	50	44.0	88	48-101
111-44-4	bis(2-Chloroethyl)ether	50	38.0	76	51-108
108-60-1	bis(2-Chloroisopropyl)ether	50	37.0	74	43-106
7005-72-3	4-Chlorophenyl phenyl ether	50	41.6	83	61-107

Blank Spike Summary

Job Number: F78009
Account: TETTNOAK Tetra Tech, Inc
Project: Holloman AFB; Alamogordo, NM

Sample	File ID	DF	Analyzed	By	Prep Date	Prep Batch	Analytical Batch
OP35095-BS	U022582.D	1	11/29/10	NAF	11/18/10	OP35095	SU1077

The QC reported here applies to the following samples: **Method:** SW846 8270D

F78009-36, F78009-37

CAS No.	Compound	Spike ug/l	BSP ug/l	BSP %	Limits
95-50-1	1,2-Dichlorobenzene	50	37.0	74	41-102
122-66-7	1,2-Diphenylhydrazine	50	43.1	86	61-110
541-73-1	1,3-Dichlorobenzene	50	36.2	72	38-100
106-46-7	1,4-Dichlorobenzene	50	36.4	73	40-100
121-14-2	2,4-Dinitrotoluene	50	42.5	85	60-109
606-20-2	2,6-Dinitrotoluene	50	43.8	88	58-104
91-94-1	3,3'-Dichlorobenzidine	50	38.5	77	57-105
53-70-3	Dibenzo(a,h)anthracene	50	49.4	99	62-112
132-64-9	Dibenzofuran	50	40.8	82	61-108
84-74-2	Di-n-butyl phthalate	50	39.8	80	62-109
117-84-0	Di-n-octyl phthalate	50	47.8	96	60-120
84-66-2	Diethyl phthalate	50	39.2	78	62-109
131-11-3	Dimethyl phthalate	50	41.0	82	63-106
117-81-7	bis(2-Ethylhexyl)phthalate	50	42.6	85	59-116
206-44-0	Fluoranthene	50	43.4	87	65-114
86-73-7	Fluorene	50	42.2	84	61-106
118-74-1	Hexachlorobenzene	50	43.5	87	62-107
87-68-3	Hexachlorobutadiene	50	44.8	90	38-107
77-47-4	Hexachlorocyclopentadiene	50	41.7	83	19-84
67-72-1	Hexachloroethane	50	36.9	74	35-101
193-39-5	Indeno(1,2,3-cd)pyrene	50	52.6	105	61-113
78-59-1	Isophorone	50	37.6	75	56-111
90-12-0	1-Methylnaphthalene	50	44.6	89	52-102
91-57-6	2-Methylnaphthalene	50	44.9	90	56-112
88-74-4	2-Nitroaniline	50	45.3	91	60-109
99-09-2	3-Nitroaniline	50	40.2	80	52-107
100-01-6	4-Nitroaniline	50	41.6	83	59-111
91-20-3	Naphthalene	50	44.5	89	50-104
98-95-3	Nitrobenzene	50	45.5	91	52-105
62-75-9	N-Nitrosodimethylamine	50	23.0	46	20-71
621-64-7	N-Nitroso-di-n-propylamine	50	37.5	75	51-104
86-30-6	N-Nitrosodiphenylamine	50	45.0	90	57-110
85-01-8	Phenanthrene	50	43.3	87	65-108
129-00-0	Pyrene	50	44.4	89	60-113
110-86-1	Pyridine	50	20.2	40	15-67
120-82-1	1,2,4-Trichlorobenzene	50	41.6	83	45-104

Blank Spike Summary

Job Number: F78009
Account: TETTNOAK Tetra Tech, Inc
Project: Holloman AFB; Alamogordo, NM

Sample	File ID	DF	Analyzed	By	Prep Date	Prep Batch	Analytical Batch
OP35095-BS	U022582.D	1	11/29/10	NAF	11/18/10	OP35095	SU1077

The QC reported here applies to the following samples: **Method:** SW846 8270D

F78009-36, F78009-37

CAS No.	Surrogate Recoveries	BSP	Limits
367-12-4	2-Fluorophenol	48%	14-62%
4165-62-2	Phenol-d5	30%	10-40%
118-79-6	2,4,6-Tribromophenol	89%	33-118%
4165-60-0	Nitrobenzene-d5	90%	42-108%
321-60-8	2-Fluorobiphenyl	79%	40-106%
1718-51-0	Terphenyl-d14	85%	39-121%

Blank Spike Summary

Job Number: F78009
Account: TETTNOAK Tetra Tech, Inc
Project: Holloman AFB; Alamogordo, NM

Sample	File ID	DF	Analyzed	By	Prep Date	Prep Batch	Analytical Batch
OP35095-BS	L049153.D	1	11/30/10	NAF	11/18/10	OP35095	SL2518

The QC reported here applies to the following samples: **Method:** SW846 8270D

F78009-36, F78009-37

CAS No.	Compound	Spike ug/l	BSP ug/l	BSP %	Limits
65-85-0	Benzoic Acid	100	30.2	30	10-50
95-57-8	2-Chlorophenol	50	40.2	80	44-103
59-50-7	4-Chloro-3-methyl phenol	50	43.3	87	53-105
120-83-2	2,4-Dichlorophenol	50	44.6	89	53-108
105-67-9	2,4-Dimethylphenol	50	35.8	72	37-91
51-28-5	2,4-Dinitrophenol	100	84.6	85	37-111
534-52-1	4,6-Dinitro-o-cresol	100	94.7	95	62-115
95-48-7	2-Methylphenol	50	35.4	71	35-91
	3&4-Methylphenol	100	60.9	61	32-85
88-75-5	2-Nitrophenol	50	44.1	88	49-111
100-02-7	4-Nitrophenol	100	37.7	38	13-55
87-86-5	Pentachlorophenol	100	101	101	57-118
108-95-2	Phenol	50	20.5	41	13-54
95-95-4	2,4,5-Trichlorophenol	50	45.9	92	59-106
88-06-2	2,4,6-Trichlorophenol	50	45.0	90	58-107
83-32-9	Acenaphthene	50	43.8	88	58-106
208-96-8	Acenaphthylene	50	44.5	89	58-105
62-53-3	Aniline	50	39.0	78	43-98
120-12-7	Anthracene	50	46.3	93	65-108
92-87-5	Benzidine	50	26.9	54	15-73
56-55-3	Benzo(a)anthracene	50	46.5	93	63-111
50-32-8	Benzo(a)pyrene	50	46.0	92	62-106
205-99-2	Benzo(b)fluoranthene	50	45.8	92	63-109
191-24-2	Benzo(g,h,i)perylene	50	46.3	93	61-111
207-08-9	Benzo(k)fluoranthene	50	46.6	93	64-111
101-55-3	4-Bromophenyl phenyl ether	50	47.1	94	64-107
85-68-7	Butyl benzyl phthalate	50	46.8	94	59-114
100-51-6	Benzyl Alcohol	50	35.5	71	34-98
91-58-7	2-Chloronaphthalene	50	42.5	85	54-105
106-47-8	4-Chloroaniline	50	41.1	82	53-103
86-74-8	Carbazole	50	45.9	92	66-109
218-01-9	Chrysene	50	45.7	91	64-111
111-91-1	bis(2-Chloroethoxy)methane	50	42.1	84	48-101
111-44-4	bis(2-Chloroethyl)ether	50	41.6	83	51-108
108-60-1	bis(2-Chloroisopropyl)ether	50	41.7	83	43-106
7005-72-3	4-Chlorophenyl phenyl ether	50	43.4	87	61-107

Blank Spike Summary

Job Number: F78009
Account: TETTNOAK Tetra Tech, Inc
Project: Holloman AFB; Alamogordo, NM

Sample	File ID	DF	Analyzed	By	Prep Date	Prep Batch	Analytical Batch
OP35095-BS	L049153.D	1	11/30/10	NAF	11/18/10	OP35095	SL2518

The QC reported here applies to the following samples: **Method:** SW846 8270D

F78009-36, F78009-37

CAS No.	Compound	Spike ug/l	BSP ug/l	BSP %	Limits
95-50-1	1,2-Dichlorobenzene	50	39.9	80	41-102
122-66-7	1,2-Diphenylhydrazine	50	45.9	92	61-110
541-73-1	1,3-Dichlorobenzene	50	39.5	79	38-100
106-46-7	1,4-Dichlorobenzene	50	38.9	78	40-100
121-14-2	2,4-Dinitrotoluene	50	45.7	91	60-109
606-20-2	2,6-Dinitrotoluene	50	45.2	90	58-104
91-94-1	3,3'-Dichlorobenzidine	50	41.0	82	57-105
53-70-3	Dibenzo(a,h)anthracene	50	46.5	93	62-112
132-64-9	Dibenzofuran	50	43.2	86	61-108
84-74-2	Di-n-butyl phthalate	50	46.5	93	62-109
117-84-0	Di-n-octyl phthalate	50	39.9	80	60-120
84-66-2	Diethyl phthalate	50	45.5	91	62-109
131-11-3	Dimethyl phthalate	50	44.8	90	63-106
117-81-7	bis(2-Ethylhexyl)phthalate	50	47.4	95	59-116
206-44-0	Fluoranthene	50	45.3	91	65-114
86-73-7	Fluorene	50	44.4	89	61-106
118-74-1	Hexachlorobenzene	50	46.3	93	62-107
87-68-3	Hexachlorobutadiene	50	42.0	84	38-107
77-47-4	Hexachlorocyclopentadiene	50	40.4	81	19-84
67-72-1	Hexachloroethane	50	39.1	78	35-101
193-39-5	Indeno(1,2,3-cd)pyrene	50	47.3	95	61-113
78-59-1	Isophorone	50	36.6	73	56-111
90-12-0	1-Methylnaphthalene	50	42.0	84	52-102
91-57-6	2-Methylnaphthalene	50	43.5	87	56-112
88-74-4	2-Nitroaniline	50	53.3	107	60-109
99-09-2	3-Nitroaniline	50	42.5	85	52-107
100-01-6	4-Nitroaniline	50	45.4	91	59-111
91-20-3	Naphthalene	50	41.7	83	50-104
98-95-3	Nitrobenzene	50	43.0	86	52-105
62-75-9	N-Nitrosodimethylamine	50	25.1	50	20-71
621-64-7	N-Nitroso-di-n-propylamine	50	39.8	80	51-104
86-30-6	N-Nitrosodiphenylamine	50	47.4	95	57-110
85-01-8	Phenanthrene	50	45.2	90	65-108
129-00-0	Pyrene	50	46.4	93	60-113
110-86-1	Pyridine	50	21.6	43	15-67
120-82-1	1,2,4-Trichlorobenzene	50	39.0	78	45-104

Blank Spike Summary

Job Number: F78009
Account: TETTNOAK Tetra Tech, Inc
Project: Holloman AFB; Alamogordo, NM

Sample	File ID	DF	Analyzed	By	Prep Date	Prep Batch	Analytical Batch
OP35095-BS	L049153.D	1	11/30/10	NAF	11/18/10	OP35095	SL2518

The QC reported here applies to the following samples: **Method:** SW846 8270D

F78009-36, F78009-37

CAS No.	Surrogate Recoveries	BSP	Limits
367-12-4	2-Fluorophenol	53%	14-62%
4165-62-2	Phenol-d5	35%	10-40%
118-79-6	2,4,6-Tribromophenol	92%	33-118%
4165-60-0	Nitrobenzene-d5	85%	42-108%
321-60-8	2-Fluorobiphenyl	87%	40-106%
1718-51-0	Terphenyl-d14	90%	39-121%

Matrix Spike/Matrix Spike Duplicate Summary

Job Number: F78009
Account: TETTNOAK Tetra Tech, Inc
Project: Holloman AFB; Alamogordo, NM

Sample	File ID	DF	Analyzed	By	Prep Date	Prep Batch	Analytical Batch
OP35095-MS	U022587.D	1	11/29/10	NAF	11/18/10	OP35095	SU1077
OP35095-MSD	U022588.D	1	11/29/10	NAF	11/18/10	OP35095	SU1077
F78054-1	U022586.D	1	11/29/10	NAF	11/18/10	OP35095	SU1077

The QC reported here applies to the following samples: **Method:** SW846 8270D

F78009-36, F78009-37

CAS No.	Compound	F78054-1 ug/l	Q	Spike ug/l	MS ug/l	MS %	MSD ug/l	MSD %	RPD	Limits Rec/RPD
65-85-0	Benzoic Acid	ND		192	104	54*	88.7	46	16	10-50/40
95-57-8	2-Chlorophenol	ND		96.2	74.3	77	68.4	71	8	44-103/29
59-50-7	4-Chloro-3-methyl phenol	ND		96.2	96.7	101	89.0	93	8	53-105/24
120-83-2	2,4-Dichlorophenol	ND		96.2	91.7	95	84.9	88	8	53-108/26
105-67-9	2,4-Dimethylphenol	ND		96.2	75.4	78	68.8	72	9	37-91/28
51-28-5	2,4-Dinitrophenol	ND		192	173	90	162	84	7	37-111/30
534-52-1	4,6-Dinitro-o-cresol	ND		192	184	96	176	92	4	62-115/26
95-48-7	2-Methylphenol	ND		96.2	73.9	77	65.3	68	12	35-91/30
	3&4-Methylphenol	ND		192	147	76	129	67	13	32-85/29
88-75-5	2-Nitrophenol	ND		96.2	92.9	97	84.4	88	10	49-111/30
100-02-7	4-Nitrophenol	ND		192	112	58*	94.3	49	17	13-55/31
87-86-5	Pentachlorophenol	ND		192	175	91	164	85	6	57-118/26
108-95-2	Phenol	ND		96.2	52.8	55*	43.7	45	19	13-54/34
95-95-4	2,4,5-Trichlorophenol	ND		96.2	84.3	88	79.4	83	6	59-106/23
88-06-2	2,4,6-Trichlorophenol	ND		96.2	81.9	85	78.5	82	4	58-107/24
83-32-9	Acenaphthene	ND		96.2	82.2	85	78.3	81	5	58-106/21
208-96-8	Acenaphthylene	ND		96.2	80.6	84	76.4	79	5	58-105/21
62-53-3	Aniline	ND		96.2	72.0	75	67.7	70	6	43-98/28
120-12-7	Anthracene	ND		96.2	85.7	89	82.4	86	4	65-108/19
92-87-5	Benzidine	ND		96.2	13.4	14*	14.0	15	4	15-73/23
56-55-3	Benzo(a)anthracene	ND		96.2	88.2	92	84.1	87	5	63-111/19
50-32-8	Benzo(a)pyrene	ND		96.2	85.6	89	82.3	86	4	62-106/20
205-99-2	Benzo(b)fluoranthene	ND		96.2	91.0	95	83.4	87	9	63-109/20
191-24-2	Benzo(g,h,i)perylene	ND		96.2	86.0	89	91.7	95	6	61-111/21
207-08-9	Benzo(k)fluoranthene	ND		96.2	79.0	82	75.5	79	5	64-111/20
101-55-3	4-Bromophenyl phenyl ether	ND		96.2	81.7	85	79.8	83	2	64-107/20
85-68-7	Butyl benzyl phthalate	ND		96.2	80.0	83	77.7	81	3	59-114/20
100-51-6	Benzyl Alcohol	ND		96.2	77.9	81	65.7	68	17	34-98/27
91-58-7	2-Chloronaphthalene	ND		96.2	77.1	80	73.4	76	5	54-105/24
106-47-8	4-Chloroaniline	ND		96.2	85.6	89	79.7	83	7	53-103/22
86-74-8	Carbazole	ND		96.2	87.3	91	81.1	84	7	66-109/20
218-01-9	Chrysene	ND		96.2	85.4	89	82.3	86	4	64-111/19
111-91-1	bis(2-Chloroethoxy)methane	ND		96.2	84.5	88	80.0	83	5	48-101/28
111-44-4	bis(2-Chloroethyl)ether	ND		96.2	73.5	76	68.2	71	7	51-108/27
108-60-1	bis(2-Chloroisopropyl)ether	ND		96.2	72.9	76	70.0	73	4	43-106/27
7005-72-3	4-Chlorophenyl phenyl ether	ND		96.2	80.3	84	79.7	83	1	61-107/20

Matrix Spike/Matrix Spike Duplicate Summary

Job Number: F78009
Account: TETTNOAK Tetra Tech, Inc
Project: Holloman AFB; Alamogordo, NM

Sample	File ID	DF	Analyzed	By	Prep Date	Prep Batch	Analytical Batch
OP35095-MS	U022587.D	1	11/29/10	NAF	11/18/10	OP35095	SU1077
OP35095-MSD	U022588.D	1	11/29/10	NAF	11/18/10	OP35095	SU1077
F78054-1	U022586.D	1	11/29/10	NAF	11/18/10	OP35095	SU1077

The QC reported here applies to the following samples: **Method:** SW846 8270D

F78009-36, F78009-37

CAS No.	Compound	F78054-1 ug/l	Q	Spike ug/l	MS ug/l	MS %	MSD ug/l	MSD %	RPD	Limits Rec/RPD
95-50-1	1,2-Dichlorobenzene	ND		96.2	73.6	77	69.7	72	5	41-102/28
122-66-7	1,2-Diphenylhydrazine	ND		96.2	80.5	84	79.2	82	2	61-110/20
541-73-1	1,3-Dichlorobenzene	ND		96.2	70.8	74	66.5	69	6	38-100/28
106-46-7	1,4-Dichlorobenzene	ND		96.2	72.9	76	68.8	72	6	40-100/28
121-14-2	2,4-Dinitrotoluene	ND		96.2	83.4	87	80.1	83	4	60-109/20
606-20-2	2,6-Dinitrotoluene	ND		96.2	85.4	89	80.1	83	6	58-104/21
91-94-1	3,3'-Dichlorobenzidine	ND		96.2	71.6	74	71.7	75	0	57-105/25
53-70-3	Dibenzo(a,h)anthracene	ND		96.2	94.7	98	98.3	102	4	62-112/20
132-64-9	Dibenzofuran	ND		96.2	79.1	82	75.9	79	4	61-108/20
84-74-2	Di-n-butyl phthalate	ND		96.2	78.9	82	77.8	81	1	62-109/20
117-84-0	Di-n-octyl phthalate	ND		96.2	85.3	89	80.0	83	6	60-120/24
84-66-2	Diethyl phthalate	ND		96.2	78.0	81	77.4	80	1	62-109/19
131-11-3	Dimethyl phthalate	ND		96.2	80.7	84	78.0	81	3	63-106/19
117-81-7	bis(2-Ethylhexyl)phthalate	ND		96.2	79.9	83	77.8	81	3	59-116/21
206-44-0	Fluoranthene	ND		96.2	88.6	92	84.1	87	5	65-114/21
86-73-7	Fluorene	ND		96.2	83.1	86	79.7	83	4	61-106/19
118-74-1	Hexachlorobenzene	ND		96.2	82.8	86	80.0	83	3	62-107/20
87-68-3	Hexachlorobutadiene	ND		96.2	84.1	87	79.0	82	6	38-107/30
77-47-4	Hexachlorocyclopentadiene	ND		96.2	67.6	70	66.0	69	2	19-84/35
67-72-1	Hexachloroethane	ND		96.2	72.2	75	70.5	73	2	35-101/29
193-39-5	Indeno(1,2,3-cd)pyrene	ND		96.2	102	106	106	110	4	61-113/20
78-59-1	Isophorone	ND		96.2	73.0	76	68.6	71	6	56-111/26
90-12-0	1-Methylnaphthalene	ND		96.2	87.7	91	81.3	85	8	52-102/25
91-57-6	2-Methylnaphthalene	ND		96.2	88.0	92	81.2	84	8	56-112/26
88-74-4	2-Nitroaniline	ND		96.2	89.1	93	81.0	84	10	60-109/20
99-09-2	3-Nitroaniline	ND		96.2	81.3	85	76.8	80	6	52-107/21
100-01-6	4-Nitroaniline	ND		96.2	87.6	91	78.2	81	11	59-111/21
91-20-3	Naphthalene	ND		96.2	86.8	90	80.9	84	7	50-104/28
98-95-3	Nitrobenzene	ND		96.2	87.3	91	80.0	83	9	52-105/28
62-75-9	N-Nitrosodimethylamine	ND		96.2	59.1	61	51.0	53	15	20-71/32
621-64-7	N-Nitroso-di-n-propylamine	ND		96.2	76.6	80	69.9	73	9	51-104/28
86-30-6	N-Nitrosodiphenylamine	ND		96.2	84.4	88	81.8	85	3	57-110/19
85-01-8	Phenanthrene	ND		96.2	84.3	88	81.1	84	4	65-108/20
129-00-0	Pyrene	ND		96.2	80.4	84	77.7	81	3	60-113/20
110-86-1	Pyridine	ND		96.2	44.5	46	42.4	44	5	15-67/40
120-82-1	1,2,4-Trichlorobenzene	ND		96.2	80.5	84	75.3	78	7	45-104/28

Matrix Spike/Matrix Spike Duplicate Summary

Job Number: F78009
Account: TETTNOAK Tetra Tech, Inc
Project: Holloman AFB; Alamogordo, NM

Sample	File ID	DF	Analyzed	By	Prep Date	Prep Batch	Analytical Batch
OP35095-MS	U022587.D	1	11/29/10	NAF	11/18/10	OP35095	SU1077
OP35095-MSD	U022588.D	1	11/29/10	NAF	11/18/10	OP35095	SU1077
F78054-1	U022586.D	1	11/29/10	NAF	11/18/10	OP35095	SU1077

The QC reported here applies to the following samples: **Method:** SW846 8270D

F78009-36, F78009-37

CAS No.	Surrogate Recoveries	MS	MSD	F78054-1	Limits
367-12-4	2-Fluorophenol	64%*	55%	43%	14-62%
4165-62-2	Phenol-d5	50%*	41%*	29%	10-40%
118-79-6	2,4,6-Tribromophenol	88%	85%	92%	33-118%
4165-60-0	Nitrobenzene-d5	88%	81%	89%	42-108%
321-60-8	2-Fluorobiphenyl	78%	76%	79%	40-106%
1718-51-0	Terphenyl-d14	81%	78%	87%	39-121%

Instrument Performance Check (DFTPP)

Job Number: F78009
Account: TETTNOAK Tetra Tech, Inc
Project: Holloman AFB; Alamogordo, NM

Sample: SL2516-DFTPP
Lab File ID: L049096.D
Instrument ID: GCMSL
Injection Date: 11/24/10
Injection Time: 08:23

m/e	Ion Abundance Criteria	Raw Abundance	% Relative Abundance		Pass/Fail
51	30.0 - 60.0% of mass 198	18532	38.2		Pass
68	Less than 2.0% of mass 69	25	0.05	(0.14) [a]	Pass
69	Mass 69 relative abundance	17453	36.0		Pass
70	Less than 2.0% of mass 69	59	0.12	(0.34) [a]	Pass
127	40.0 - 60.0% of mass 198	21571	44.5		Pass
197	Less than 1.0% of mass 198	93	0.19		Pass
198	Base peak, 100% relative abundance	48460	100.0		Pass
199	5.0 - 9.0% of mass 198	3275	6.76		Pass
275	10.0 - 30.0% of mass 198	10408	21.5		Pass
365	1.0 - 100.0% of mass 198	1054	2.17		Pass
441	Present, but less than mass 443	433	0.89	(6.27) [b]	Pass
442	40.0 - 100.0% of mass 198	34915	72.0		Pass
443	17.0 - 23.0% of mass 442	6907	14.3	(19.8) [c]	Pass

(a) Value is % of mass 69
(b) Value is % of mass 443
(c) Value is % of mass 442

This check applies to the following Samples, MS, MSD, Blanks, and Standards:

Lab Sample ID	Lab File ID	Date Analyzed	Time Analyzed	Hours Lapsed	Client Sample ID
SL2516-IC2516	L049099.D	11/24/10	09:36	01:13	Initial cal 25
SL2516-IC2516	L049100.D	11/24/10	10:04	01:41	Initial cal 5
SL2516-IC2516	L049101.D	11/24/10	10:33	02:10	Initial cal 50
SL2516-ICC2516	L049102.D	11/24/10	11:01	02:38	Initial cal 75
SL2516-IC2516	L049103.D	11/24/10	11:29	03:06	Initial cal 100
SL2516-IC2516	L049104.D	11/24/10	11:57	03:34	Initial cal 125
SL2516-IC2516	L049105.D	11/24/10	12:27	04:04	Initial cal 5
SL2516-IC2516	L049107.D	11/24/10	13:24	05:01	Initial cal 25
SL2516-IC2516	L049108.D	11/24/10	14:47	06:24	Initial cal 10
SL2516-IC2516	L049110.D	11/24/10	15:43	07:20	Initial cal 50
SL2516-IC2516	L049111.D	11/24/10	16:12	07:49	Initial cal 75
SL2516-IC2516	L049112.D	11/24/10	16:40	08:17	Initial cal 100
SL2516-IC2516	L049113.D	11/24/10	17:09	08:46	Initial cal 125
SL2516-IC2516	L049114.D	11/24/10	17:37	09:14	Initial cal 1250
SL2516-IC2516	L049115.D	11/24/10	18:05	09:42	Initial cal 2000
SL2516-ICV2516	L049116.D	11/24/10	18:33	10:10	Initial cal verification 50
SL2516-ICV2516	L049117.D	11/24/10	19:01	10:38	Initial cal verification 50
SL2516-ICV2516	L049118.D	11/24/10	19:29	11:06	Initial cal verification 50
OP35019-BS	L049119.D	11/24/10	19:57	11:34	Blank Spike

Instrument Performance Check (DFTPP)

Job Number: F78009
Account: TETTNOAK Tetra Tech, Inc
Project: Holloman AFB; Alamogordo, NM

Sample: SL2516-DFTPP
Lab File ID: L049096.D
Instrument ID: GCMSL
Injection Date: 11/24/10
Injection Time: 08:23

Lab Sample ID	Lab File ID	Date Analyzed	Time Analyzed	Hours Lapsed	Client Sample ID
OP35019-MB	L049120.D	11/24/10	20:25	12:02	Method Blank
ZZZZZZ	L049121.D	11/24/10	20:53	12:30	(unrelated sample)

Instrument Performance Check (DFTPP)

Job Number: F78009
Account: TETTNOAK Tetra Tech, Inc
Project: Holloman AFB; Alamogordo, NM

Sample: SL2518-DFTPP
Lab File ID: L049145.D
Instrument ID: GCMSL
Injection Date: 11/30/10
Injection Time: 07:05

m/e	Ion Abundance Criteria	Raw Abundance	% Relative Abundance		Pass/Fail
51	30.0 - 60.0% of mass 198	35557	36.6		Pass
68	Less than 2.0% of mass 69	16	0.02	(0.05) [a]	Pass
69	Mass 69 relative abundance	33439	34.4		Pass
70	Less than 2.0% of mass 69	181	0.19	(0.54) [a]	Pass
127	40.0 - 60.0% of mass 198	42226	43.5		Pass
197	Less than 1.0% of mass 198	14	0.01		Pass
198	Base peak, 100% relative abundance	97150	100.0		Pass
199	5.0 - 9.0% of mass 198	6672	6.87		Pass
275	10.0 - 30.0% of mass 198	22210	22.9		Pass
365	1.0 - 100.0% of mass 198	2257	2.32		Pass
441	Present, but less than mass 443	711	0.73	(4.95) [b]	Pass
442	40.0 - 100.0% of mass 198	74183	76.4		Pass
443	17.0 - 23.0% of mass 442	14370	14.8	(19.4) [c]	Pass

(a) Value is % of mass 69
(b) Value is % of mass 443
(c) Value is % of mass 442

This check applies to the following Samples, MS, MSD, Blanks, and Standards:

Lab Sample ID	Lab File ID	Date Analyzed	Time Analyzed	Hours Lapsed	Client Sample ID
SL2518-CC2516	L049146.D	11/30/10	07:24	00:19	Continuing cal 75
SL2518-CC2516	L049147.D	11/30/10	07:59	00:54	Continuing cal 75
OP35172-BS	L049148.D	11/30/10	08:28	01:23	Blank Spike
OP35172-MB	L049149.D	11/30/10	08:56	01:51	Method Blank
C13508-1	L049150.D	11/30/10	09:25	02:20	(used for QC only; not part of job F78009)
OP35172-MS	L049151.D	11/30/10	09:54	02:49	Matrix Spike
OP35172-MSD	L049152.D	11/30/10	10:22	03:17	Matrix Spike Duplicate
OP35095-BS	L049153.D	11/30/10	10:50	03:45	Blank Spike
OP35095-MB	L049154.D	11/30/10	11:19	04:14	Method Blank
ZZZZZZ	L049155.D	11/30/10	11:48	04:43	(unrelated sample)
ZZZZZZ	L049156.D	11/30/10	12:16	05:11	(unrelated sample)
ZZZZZZ	L049157.D	11/30/10	12:45	05:40	(unrelated sample)
ZZZZZZ	L049158.D	11/30/10	13:14	06:09	(unrelated sample)
ZZZZZZ	L049159.D	11/30/10	13:43	06:38	(unrelated sample)
ZZZZZZ	L049160.D	11/30/10	14:11	07:06	(unrelated sample)
ZZZZZZ	L049161.D	11/30/10	14:40	07:35	(unrelated sample)
ZZZZZZ	L049162.D	11/30/10	15:10	08:05	(unrelated sample)
ZZZZZZ	L049163.D	11/30/10	15:39	08:34	(unrelated sample)
ZZZZZZ	L049164.D	11/30/10	16:08	09:03	(unrelated sample)

Instrument Performance Check (DFTPP)

Job Number: F78009
Account: TETTNOAK Tetra Tech, Inc
Project: Holloman AFB; Alamogordo, NM

Sample: SL2518-DFTPP
Lab File ID: L049145.D
Instrument ID: GCMSL
Injection Date: 11/30/10
Injection Time: 07:05

Lab Sample ID	Lab File ID	Date Analyzed	Time Analyzed	Hours Lapsed	Client Sample ID
ZZZZZZ	L049165.D	11/30/10	16:37	09:32	(unrelated sample)
ZZZZZZ	L049166.D	11/30/10	17:06	10:01	(unrelated sample)
ZZZZZZ	L049167.D	11/30/10	17:35	10:30	(unrelated sample)
ZZZZZZ	L049168.D	11/30/10	18:04	10:59	(unrelated sample)

Instrument Performance Check (DFTPP)

Job Number: F78009
Account: TETTNOAK Tetra Tech, Inc
Project: Holloman AFB; Alamogordo, NM

Sample: SU1064-DFTPP
Lab File ID: U022252.D
Instrument ID: GCMSU
Injection Date: 11/16/10
Injection Time: 13:11

m/e	Ion Abundance Criteria	Raw Abundance	% Relative Abundance		Pass/Fail
51	30.0 - 60.0% of mass 198	134189	49.2		Pass
68	Less than 2.0% of mass 69	2003	0.73	(1.67) [a]	Pass
69	Mass 69 relative abundance	120189	44.1		Pass
70	Less than 2.0% of mass 69	647	0.24	(0.54) [a]	Pass
127	40.0 - 60.0% of mass 198	148176	54.3		Pass
197	Less than 1.0% of mass 198	0	0.00		Pass
198	Base peak, 100% relative abundance	272680	100.0		Pass
199	5.0 - 9.0% of mass 198	18497	6.78		Pass
275	10.0 - 30.0% of mass 198	57378	21.0		Pass
365	1.0 - 100.0% of mass 198	5521	2.02		Pass
441	Present, but less than mass 443	28015	10.3	(80.0) [b]	Pass
442	40.0 - 100.0% of mass 198	178866	65.6		Pass
443	17.0 - 23.0% of mass 442	35021	12.8	(19.6) [c]	Pass

(a) Value is % of mass 69
(b) Value is % of mass 443
(c) Value is % of mass 442

This check applies to the following Samples, MS, MSD, Blanks, and Standards:

Lab Sample ID	Lab File ID	Date Analyzed	Time Analyzed	Hours Lapsed	Client Sample ID
SU1064-IC1064	U022253.D	11/16/10	13:29	00:18	Initial cal 5
SU1064-IC1064	U022254.D	11/16/10	13:59	00:48	Initial cal 25
SU1064-IC1064	U022255.D	11/16/10	14:27	01:16	Initial cal 50
SU1064-ICC1064	U022256.D	11/16/10	14:54	01:43	Initial cal 75
SU1064-IC1064	U022257.D	11/16/10	15:25	02:14	Initial cal 100
SU1064-IC1064	U022258.D	11/16/10	15:53	02:42	Initial cal 125
SU1064-ICV1064	U022259.D	11/16/10	16:21	03:10	Initial cal verification 50
SU1064-ICV1064	U022260.D	11/16/10	16:50	03:39	Initial cal verification 50
OP34946-BS	U022261.D	11/16/10	17:16	04:05	Blank Spike
OP34946-MB	U022262.D	11/16/10	17:43	04:32	Method Blank
ZZZZZZ	U022263.D	11/16/10	18:10	04:59	(unrelated sample)
ZZZZZZ	U022264.D	11/16/10	18:37	05:26	(unrelated sample)

Instrument Performance Check (DFTPP)

Job Number: F78009
Account: TETTNOAK Tetra Tech, Inc
Project: Holloman AFB; Alamogordo, NM

Sample: SU1077-DFTPP
Lab File ID: U022580.D
Instrument ID: GCMSU
Injection Date: 11/29/10
Injection Time: 08:36

m/e	Ion Abundance Criteria	Raw Abundance	% Relative Abundance		Pass/Fail
51	30.0 - 60.0% of mass 198	68034	46.8		Pass
68	Less than 2.0% of mass 69	1208	0.83	(1.99) [a]	Pass
69	Mass 69 relative abundance	60772	41.8		Pass
70	Less than 2.0% of mass 69	278	0.19	(0.46) [a]	Pass
127	40.0 - 60.0% of mass 198	75802	52.1		Pass
197	Less than 1.0% of mass 198	325	0.22		Pass
198	Base peak, 100% relative abundance	145394	100.0		Pass
199	5.0 - 9.0% of mass 198	9709	6.68		Pass
275	10.0 - 30.0% of mass 198	31026	21.3		Pass
365	1.0 - 100.0% of mass 198	3265	2.25		Pass
441	Present, but less than mass 443	15983	11.0	(76.9) [b]	Pass
442	40.0 - 100.0% of mass 198	104277	71.7		Pass
443	17.0 - 23.0% of mass 442	20773	14.3	(19.9) [c]	Pass

(a) Value is % of mass 69
(b) Value is % of mass 443
(c) Value is % of mass 442

This check applies to the following Samples, MS, MSD, Blanks, and Standards:

Lab Sample ID	Lab File ID	Date Analyzed	Time Analyzed	Hours Lapsed	Client Sample ID
SU1077-CC1064	U022581.D	11/29/10	09:02	00:26	Continuing cal 50
OP35095-BS	U022582.D	11/29/10	09:31	00:55	Blank Spike
OP35095-MB	U022583.D	11/29/10	09:58	01:22	Method Blank
F78009-36	U022584.D	11/29/10	10:26	01:50	SD27-TTMW-05
F78009-37	U022585.D	11/29/10	10:55	02:19	SD27-TTMW-01
F78054-1	U022586.D	11/29/10	11:23	02:47	(used for QC only; not part of job F78009)
OP35095-MS	U022587.D	11/29/10	11:52	03:16	Matrix Spike
OP35095-MSD	U022588.D	11/29/10	12:21	03:45	Matrix Spike Duplicate
ZZZZZZ	U022590.D	11/29/10	13:17	04:41	(unrelated sample)
ZZZZZZ	U022591.D	11/29/10	13:47	05:11	(unrelated sample)
ZZZZZZ	U022592.D	11/29/10	14:15	05:39	(unrelated sample)
ZZZZZZ	U022593.D	11/29/10	14:44	06:08	(unrelated sample)
ZZZZZZ	U022594.D	11/29/10	15:12	06:36	(unrelated sample)
ZZZZZZ	U022595.D	11/29/10	15:40	07:04	(unrelated sample)
ZZZZZZ	U022596.D	11/29/10	16:08	07:32	(unrelated sample)
ZZZZZZ	U022597.D	11/29/10	16:36	08:00	(unrelated sample)
ZZZZZZ	U022598.D	11/29/10	17:03	08:27	(unrelated sample)
ZZZZZZ	U022601.D	11/29/10	18:26	09:50	(unrelated sample)

Instrument Performance Check (DFTPP)

Job Number: F78009
Account: TETTNOAK Tetra Tech, Inc
Project: Holloman AFB; Alamogordo, NM

Sample: SX763-DFTPP
Lab File ID: X015298.D
Instrument ID: GCMSX
Injection Date: 11/23/10
Injection Time: 13:24

m/e	Ion Abundance Criteria	Raw Abundance	% Relative Abundance		Pass/Fail
51	30.0 - 60.0% of mass 198	24896	36.1		Pass
68	Less than 2.0% of mass 69	450	0.65	(1.69) [a]	Pass
69	Mass 69 relative abundance	26678	38.7		Pass
70	Less than 2.0% of mass 69	140	0.20	(0.52) [a]	Pass
127	40.0 - 60.0% of mass 198	35500	51.5		Pass
197	Less than 1.0% of mass 198	404	0.59		Pass
198	Base peak, 100% relative abundance	68929	100.0		Pass
199	5.0 - 9.0% of mass 198	4614	6.69		Pass
275	10.0 - 30.0% of mass 198	16628	24.1		Pass
365	1.0 - 100.0% of mass 198	1841	2.67		Pass
441	Present, but less than mass 443	9706	14.1	(75.2) [b]	Pass
442	40.0 - 100.0% of mass 198	68262	99.0		Pass
443	17.0 - 23.0% of mass 442	12907	18.7	(18.9) [c]	Pass

(a) Value is % of mass 69
(b) Value is % of mass 443
(c) Value is % of mass 442

This check applies to the following Samples, MS, MSD, Blanks, and Standards:

Lab Sample ID	Lab File ID	Date Analyzed	Time Analyzed	Hours Lapsed	Client Sample ID
SX763-IC763	X015300.D	11/23/10	14:30	01:06	Initial cal 5
SX763-IC763	X015301.D	11/23/10	14:57	01:33	Initial cal 25
SX763-IC763	X015302.D	11/23/10	15:24	02:00	Initial cal 50
SX763-ICC763	X015303.D	11/23/10	15:51	02:27	Initial cal 75
SX763-IC763	X015304.D	11/23/10	16:17	02:53	Initial cal 100
SX763-IC763	X015305.D	11/23/10	16:45	03:21	Initial cal 125
SX763-ICV763	X015306.D	11/23/10	17:12	03:48	Initial cal verification 50
SX763-ICV763	X015307.D	11/23/10	17:39	04:15	Initial cal verification 50

Instrument Performance Check (DFTPP)

Job Number: F78009
Account: TETTNOAK Tetra Tech, Inc
Project: Holloman AFB; Alamogordo, NM

Sample: SX769-DFTPP
Lab File ID: X015435.D
Instrument ID: GCMSX
Injection Date: 11/30/10
Injection Time: 12:21

m/e	Ion Abundance Criteria	Raw Abundance	% Relative Abundance		Pass/Fail
51	30.0 - 60.0% of mass 198	35793	35.4		Pass
68	Less than 2.0% of mass 69	607	0.60	(1.59) [a]	Pass
69	Mass 69 relative abundance	38094	37.7		Pass
70	Less than 2.0% of mass 69	213	0.21	(0.56) [a]	Pass
127	40.0 - 60.0% of mass 198	50861	50.4		Pass
197	Less than 1.0% of mass 198	483	0.48		Pass
198	Base peak, 100% relative abundance	100998	100.0		Pass
199	5.0 - 9.0% of mass 198	7078	7.01		Pass
275	10.0 - 30.0% of mass 198	24331	24.1		Pass
365	1.0 - 100.0% of mass 198	2867	2.84		Pass
441	Present, but less than mass 443	14228	14.1	(75.4) [b]	Pass
442	40.0 - 100.0% of mass 198	99290	98.3		Pass
443	17.0 - 23.0% of mass 442	18864	18.7	(19.0) [c]	Pass

(a) Value is % of mass 69
(b) Value is % of mass 443
(c) Value is % of mass 442

This check applies to the following Samples, MS, MSD, Blanks, and Standards:

Lab Sample ID	Lab File ID	Date Analyzed	Time Analyzed	Hours Lapsed	Client Sample ID
SX769-CC763	X015436.D	11/30/10	12:45	00:24	Continuing cal 75
OP35212-BS	X015437.D	11/30/10	13:33	01:12	Blank Spike
OP35212-MB	X015438.D	11/30/10	14:00	01:39	Method Blank
ZZZZZZ	X015439.D	11/30/10	14:27	02:06	(unrelated sample)
ZZZZZZ	X015440.D	11/30/10	14:54	02:33	(unrelated sample)
OP35095-MB	X015441.D	11/30/10	15:21	03:00	Method Blank
ZZZZZZ	X015442.D	11/30/10	16:11	03:50	(unrelated sample)
ZZZZZZ	X015443.D	11/30/10	16:38	04:17	(unrelated sample)
ZZZZZZ	X015444.D	11/30/10	17:05	04:44	(unrelated sample)
OP35126-MB	X015446.D	11/30/10	17:59	05:38	Method Blank
ZZZZZZ	X015447.D	11/30/10	18:26	06:05	(unrelated sample)
ZZZZZZ	X015448.D	11/30/10	18:54	06:33	(unrelated sample)
ZZZZZZ	X015449.D	11/30/10	19:21	07:00	(unrelated sample)
ZZZZZZ	X015450.D	11/30/10	19:48	07:27	(unrelated sample)
ZZZZZZ	X015451.D	11/30/10	20:14	07:53	(unrelated sample)
OP35180-MB	X015452.D	11/30/10	20:41	08:20	Method Blank
ZZZZZZ	X015453.D	11/30/10	21:08	08:47	(unrelated sample)
ZZZZZZ	X015454.D	11/30/10	21:35	09:14	(unrelated sample)
ZZZZZZ	X015455.D	11/30/10	22:02	09:41	(unrelated sample)

Instrument Performance Check (DFTPP)

Job Number: F78009
Account: TETTNOAK Tetra Tech, Inc
Project: Holloman AFB; Alamogordo, NM

Sample: SX770-DFTPP
Lab File ID: X015457.D
Instrument ID: GCMSX
Injection Date: 12/01/10
Injection Time: 09:01

m/e	Ion Abundance Criteria	Raw Abundance	% Relative Abundance		Pass/Fail
51	30.0 - 60.0% of mass 198	22028	35.7		Pass
68	Less than 2.0% of mass 69	398	0.64	(1.72) [a]	Pass
69	Mass 69 relative abundance	23161	37.5		Pass
70	Less than 2.0% of mass 69	247	0.40	(1.07) [a]	Pass
127	40.0 - 60.0% of mass 198	31160	50.5		Pass
197	Less than 1.0% of mass 198	14	0.02		Pass
198	Base peak, 100% relative abundance	61741	100.0		Pass
199	5.0 - 9.0% of mass 198	4186	6.78		Pass
275	10.0 - 30.0% of mass 198	14239	23.1		Pass
365	1.0 - 100.0% of mass 198	1595	2.58		Pass
441	Present, but less than mass 443	8666	14.0	(75.4) [b]	Pass
442	40.0 - 100.0% of mass 198	59491	96.4		Pass
443	17.0 - 23.0% of mass 442	11488	18.6	(19.3) [c]	Pass

(a) Value is % of mass 69
(b) Value is % of mass 443
(c) Value is % of mass 442

This check applies to the following Samples, MS, MSD, Blanks, and Standards:

Lab Sample ID	Lab File ID	Date Analyzed	Time Analyzed	Hours Lapsed	Client Sample ID
SX770-CC763	X015458.D	12/01/10	09:18	00:17	Continuing cal 75
OP35214-BS	X015459.D	12/01/10	09:47	00:46	Blank Spike
OP35214-MB	X015460.D	12/01/10	10:14	01:13	Method Blank
ZZZZZZ	X015461.D	12/01/10	10:41	01:40	(unrelated sample)
ZZZZZZ	X015463.D	12/01/10	11:34	02:33	(unrelated sample)
ZZZZZZ	X015464.D	12/01/10	12:01	03:00	(unrelated sample)
F78309-1	X015465.D	12/01/10	12:28	03:27	(used for QC only; not part of job F78009)
OP35214-MS	X015466.D	12/01/10	12:58	03:57	Matrix Spike
OP35214-MSD	X015467.D	12/01/10	13:25	04:24	Matrix Spike Duplicate
ZZZZZZ	X015468.D	12/01/10	13:52	04:51	(unrelated sample)
ZZZZZZ	X015470.D	12/01/10	14:47	05:46	(unrelated sample)
ZZZZZZ	X015471.D	12/01/10	15:14	06:13	(unrelated sample)
ZZZZZZ	X015472.D	12/01/10	15:41	06:40	(unrelated sample)
ZZZZZZ	X015473.D	12/01/10	16:07	07:06	(unrelated sample)
ZZZZZZ	X015474.D	12/01/10	16:34	07:33	(unrelated sample)
ZZZZZZ	X015475.D	12/01/10	17:01	08:00	(unrelated sample)
ZZZZZZ	X015476.D	12/01/10	17:28	08:27	(unrelated sample)
ZZZZZZ	X015477.D	12/01/10	17:55	08:54	(unrelated sample)
OP35095-MB	X015478.D	12/01/10	18:21	09:20	Method Blank

Instrument Performance Check (DFTPP)

Job Number: F78009
Account: TETTNOAK Tetra Tech, Inc
Project: Holloman AFB; Alamogordo, NM

Sample: SX770-DFTPP
Lab File ID: X015457.D
Instrument ID: GCMSX
Injection Date: 12/01/10
Injection Time: 09:01

Lab Sample ID	Lab File ID	Date Analyzed	Time Analyzed	Hours Lapsed	Client Sample ID
ZZZZZZ	X015479.D	12/01/10	18:48	09:47	(unrelated sample)
ZZZZZZ	X015480.D	12/01/10	19:15	10:14	(unrelated sample)
ZZZZZZ	X015481.D	12/01/10	19:42	10:41	(unrelated sample)
ZZZZZZ	X015482.D	12/01/10	20:08	11:07	(unrelated sample)
ZZZZZZ	X015483.D	12/01/10	20:35	11:34	(unrelated sample)

Semivolatile Internal Standard Area Summary

Job Number: F78009
Account: TETTNOAK Tetra Tech, Inc
Project: Holloman AFB; Alamogordo, NM

Check Std:	SL2518-CC2516	**Injection Date:**	11/30/10
Lab File ID:	L049146.D	**Injection Time:**	07:24
Instrument ID:	GCMSL	**Method:**	SW846 8270D

	IS 1 AREA	RT	IS 2 AREA	RT	IS 3 AREA	RT	IS 4 AREA	RT	IS 5 AREA	RT	IS 6 AREA	RT
Initial Cal [a]	114470	4.95	448084	6.09	231989	8.37	402486	10.87	322407	15.79	323786	18.30
Check Std [b]	205126	4.95	759029	6.09	392650	8.37	662804	10.87	489962	15.80	546535	18.30
Upper Limit [c]	410252	5.45	1518058	6.59	785300	8.87	1325608	11.37	979924	16.30	1093070	18.80
Lower Limit [d]	102563	4.45	379515	5.59	196325	7.87	331402	10.37	244981	15.30	273268	17.80

Lab Sample ID	IS 1 AREA	RT	IS 2 AREA	RT	IS 3 AREA	RT	IS 4 AREA	RT	IS 5 AREA	RT	IS 6 AREA	RT
OP35172-BS	161608	4.95	595278	6.09	297264	8.36	503833	10.86	411818	15.79	413192	18.29
OP35172-MB	158336	4.95	566743	6.08	280583	8.36	466445	10.86	396837	15.78	376083	18.29
C13508-1	146101	4.95	531265	6.09	272659	8.36	450671	10.86	389322	15.78	367715	18.29
OP35172-MS	157359	4.94	578032	6.09	291766	8.36	497820	10.86	390808	15.78	386430	18.29
OP35172-MSD	156738	4.95	578421	6.09	298462	8.36	497549	10.86	401533	15.79	398669	18.29
OP35095-BS	149669	4.95	555049	6.09	278914	8.36	462459	10.86	372464	15.79	384569	18.29
OP35095-MB	159828	4.95	579909	6.08	285810	8.36	473022	10.86	412697	15.78	395428	18.29
ZZZZZZ	154238	4.95	554501	6.09	280661	8.36	471345	10.86	415589	15.78	398644	18.29
ZZZZZZ	181244	4.95	645093	6.09	325576	8.36	526592	10.86	443583	15.78	425067	18.29
ZZZZZZ	171894	4.95	622526	6.09	313919	8.36	516056	10.86	449118	15.78	423528	18.29
ZZZZZZ	141438	4.95	518621	6.09	263568	8.36	444304	10.86	382204	15.78	359204	18.29
ZZZZZZ	154208	4.95	555572	6.08	285504	8.36	479730	10.86	409217	15.78	393437	18.29
ZZZZZZ	160677	4.95	585102	6.09	300356	8.36	504132	10.86	445346	15.78	423165	18.29
ZZZZZZ	165231	4.95	617311	6.09	313152	8.36	525495	10.86	450169	15.78	423871	18.29
ZZZZZZ	144783	4.95	514087	6.09	257008	8.36	424577	10.86	360783	15.78	346529	18.29
ZZZZZZ	138162	4.95	486869	6.09	242475	8.36	405565	10.86	356602	15.78	344714	18.29
ZZZZZZ	152070	4.95	551130	6.08	273580	8.36	449191	10.86	380833	15.78	375494	18.29
ZZZZZZ	144214	4.95	506843	6.08	255946	8.36	426432	10.86	383303	15.78	395362	18.29
ZZZZZZ	126146	4.95	459127	6.08	232288	8.36	384163	10.86	335257	15.78	319859	18.29
ZZZZZZ	123764	4.95	466701	6.09	241829	8.36	405868	10.86	360918	15.79	355583	18.29
ZZZZZZ	143645	4.95	511411	6.08	260617	8.36	433781	10.86	380354	15.79	394285	18.29

IS 1 = 1,4-Dichlorobenzene-d4
IS 2 = Naphthalene-d8
IS 3 = Acenaphthene-D10
IS 4 = Phenanthrene-d10
IS 5 = Chrysene-d12
IS 6 = Perylene-d12

(a) Initial Cal is: SL2516-ICC2516 L049102.D 11/24/10 11:01
(b) Check Std Limit = -50 to + 100% of initial cal area.
(c) Upper Limit = + 100% of check standard area; Retention time + 0.5 minutes.
(d) Lower Limit = -50% of check standard area; Retention time -0.5 minutes.

Semivolatile Internal Standard Area Summary

Job Number: F78009
Account: TETTNOAK Tetra Tech, Inc
Project: Holloman AFB; Alamogordo, NM

Check Std:	SU1077-CC1064	**Injection Date:**	11/29/10
Lab File ID:	U022581.D	**Injection Time:**	09:02
Instrument ID:	GCMSU	**Method:**	SW846 8270D

	IS 1 AREA	RT	IS 2 AREA	RT	IS 3 AREA	RT	IS 4 AREA	RT	IS 5 AREA	RT	IS 6 AREA	RT
Initial Cal [a]	99240	4.82	463145	5.93	206042	8.18	356256	10.62	370070	15.52	367332	18.03
Check Std [b]	78804	4.61	352434	5.68	160397	7.86	273900	10.26	261982	15.14	267573	17.64
Upper Limit [c]	157608	5.11	704868	6.18	320794	8.36	547800	10.76	523964	15.64	535146	18.14
Lower Limit [d]	39402	4.11	176217	5.18	80199	7.36	136950	9.76	130991	14.64	133787	17.14

Lab Sample ID	IS 1 AREA	RT	IS 2 AREA	RT	IS 3 AREA	RT	IS 4 AREA	RT	IS 5 AREA	RT	IS 6 AREA	RT
OP35095-BS	118930	4.61	465705	5.68	234865	7.86	386274	10.27	367120	15.14	349949	17.64
OP35095-MB	75203	4.61	298115	5.68	149530	7.85	236385	10.26	211992	15.13	222570	17.63
F78009-36 [e]	70688	4.61	276126	5.68	142725	7.85	230641	10.26	207400	15.13	207870	17.63
F78009-37	68492	4.61	266965	5.68	136403	7.85	222440	10.26	203400	15.13	211458	17.63
F78054-1	76017	4.61	306601	5.68	158916	7.85	259319	10.26	246035	15.13	249559	17.63
OP35095-MS	60840	4.61	246739	5.68	128551	7.86	220952	10.26	241230	15.14	252147	17.64
OP35095-MSD	58462	4.61	234201	5.68	119303	7.85	202511	10.26	214328	15.14	235274	17.63
ZZZZZZ	83254	4.61	339324	5.68	176970	7.85	297288	10.26	309509	15.13	323335	17.63
ZZZZZZ	90389	4.61	356603	5.68	187542	7.86	307582	10.26	300045	15.13	308699	17.63
ZZZZZZ	67224	4.61	267346	5.68	137621	7.85	227427	10.26	230362	15.13	241387	17.63
ZZZZZZ	87375	4.61	347022	5.68	175721	7.85	282602	10.26	271167	15.13	284542	17.63
ZZZZZZ	76127	4.61	301126	5.68	152816	7.85	243505	10.26	226552	15.13	237635	17.63
ZZZZZZ	96546	4.61	377291	5.68	198915	7.85	325343	10.26	313926	15.13	327738	17.63
ZZZZZZ	98237	4.61	385581	5.68	197217	7.85	329717	10.26	317391	15.13	320303	17.63
ZZZZZZ	102905	4.61	399192	5.68	208052	7.85	338271	10.26	311014	15.13	314153	17.63
ZZZZZZ	104840	4.61	416753	5.68	220561	7.85	370576	10.26	337453	15.13	332486	17.63
ZZZZZZ	106683	4.61	431670	5.68	227729	7.85	385428	10.26	353892	15.13	346717	17.63

IS 1 = 1,4-Dichlorobenzene-d4
IS 2 = Naphthalene-d8
IS 3 = Acenaphthene-D10
IS 4 = Phenanthrene-d10
IS 5 = Chrysene-d12
IS 6 = Perylene-d12

(a) Initial Cal is: SU1064-ICC1064 U022256.D 11/16/10 14:54
(b) Check Std Limit = -50 to + 100% of initial cal area.
(c) Upper Limit = + 100% of check standard area; Retention time + 0.5 minutes.
(d) Lower Limit = -50% of check standard area; Retention time -0.5 minutes.
(e) Dilution required due to matrix interference.

Semivolatile Internal Standard Area Summary

Job Number: F78009
Account: TETTNOAK Tetra Tech, Inc
Project: Holloman AFB; Alamogordo, NM

Check Std:	SX769-CC763	**Injection Date:**	11/30/10
Lab File ID:	X015436.D	**Injection Time:**	12:45
Instrument ID:	GCMSX	**Method:**	SW846 8270D

	IS 1 AREA	RT	IS 2 AREA	RT	IS 3 AREA	RT	IS 4 AREA	RT	IS 5 AREA	RT	IS 6 AREA	RT
Initial Cal [a]	102918	5.20	420448	6.42	231514	8.31	417493	10.53	367243	15.55	426152	18.24
Check Std [b]	145654	5.12	592625	6.33	330834	8.20	567737	10.40	454451	15.40	483451	18.08
Upper Limit [c]	291308	5.62	1185250	6.83	661668	8.70	1135474	10.90	908902	15.90	966902	18.58
Lower Limit [d]	72827	4.62	296313	5.83	165417	7.70	283869	9.90	227226	14.90	241726	17.58

Lab Sample ID	IS 1 AREA	RT	IS 2 AREA	RT	IS 3 AREA	RT	IS 4 AREA	RT	IS 5 AREA	RT	IS 6 AREA	RT
OP35212-BS	142705	5.11	582338	6.33	330806	8.20	568218	10.40	436071	15.39	430968	18.07
OP35212-MB	130767	5.11	524234	6.32	297346	8.19	522653	10.39	439201	15.38	435643	18.06
ZZZZZZ	133115	5.11	548484	6.32	310421	8.20	551826	10.39	442260	15.38	465414	18.07
ZZZZZZ	144737	5.11	602320	6.32	333865	8.19	555610	10.39	435232	15.38	455834	18.07
OP35095-MB	149255	5.11	597504	6.32	338495	8.20	588188	10.39	473381	15.38	454782	18.06
ZZZZZZ	154005	5.11	621126	6.33	344275	8.20	584319	10.39	460788	15.39	469451	18.07
ZZZZZZ	149962	5.11	609537	6.32	330822	8.19	573943	10.39	460329	15.38	454225	18.06
ZZZZZZ	138006	5.11	541200	6.32	296597	8.19	523881	10.39	458308	15.38	490434	18.07
OP35126-MB	155310	5.11	620693	6.32	343221	8.20	589344	10.39	462079	15.38	457941	18.06
ZZZZZZ	138980	5.11	548098	6.33	293240	8.20	507235	10.39	449290	15.38	486494	18.06
ZZZZZZ	152686	5.11	602140	6.33	331520	8.20	574867	10.39	468423	15.38	473684	18.06
ZZZZZZ	145068	5.11	579559	6.32	313328	8.20	534669	10.39	455287	15.38	503723	18.07
ZZZZZZ	169135	5.11	672766	6.33	378508	8.20	644626	10.39	501854	15.38	514805	18.06
ZZZZZZ	164189	5.11	635336	6.33	359416	8.19	608594	10.39	485767	15.38	482594	18.06
OP35180-MB	184882	5.11	745176	6.32	411499	8.19	696884	10.39	540882	15.38	545491	18.06
ZZZZZZ	162324	5.11	657834	6.32	379234	8.19	645400	10.39	577478	15.38	583853	18.07
ZZZZZZ	183840	5.11	701915	6.33	374276	8.19	657592	10.39	521658	15.38	561799	18.07
ZZZZZZ	178685	5.11	697512	6.32	384019	8.19	638526	10.39	559426	15.39	602885	18.08

IS 1 = 1,4-Dichlorobenzene-d4
IS 2 = Naphthalene-d8
IS 3 = Acenaphthene-D10
IS 4 = Phenanthrene-d10
IS 5 = Chrysene-d12
IS 6 = Perylene-d12

(a) Initial Cal is: SX763-ICC763 X015303.D 11/23/10 15:51
(b) Check Std Limit = -50 to + 100% of initial cal area.
(c) Upper Limit = + 100% of check standard area; Retention time + 0.5 minutes.
(d) Lower Limit = -50% of check standard area; Retention time -0.5 minutes.

Semivolatile Internal Standard Area Summary

Job Number: F78009
Account: TETTNOAK Tetra Tech, Inc
Project: Holloman AFB; Alamogordo, NM

Check Std:	SX770-CC763	**Injection Date:**	12/01/10
Lab File ID:	X015458.D	**Injection Time:**	09:18
Instrument ID:	GCMSX	**Method:**	SW846 8270D

	IS 1 AREA	RT	IS 2 AREA	RT	IS 3 AREA	RT	IS 4 AREA	RT	IS 5 AREA	RT	IS 6 AREA	RT
Initial Cal [a]	102918	5.20	420448	6.42	231514	8.31	417493	10.53	367243	15.55	426152	18.24
Check Std [b]	126417	5.10	509389	6.31	281274	8.17	487168	10.36	410558	15.36	447295	18.04
Upper Limit [c]	252834	5.60	1018778	6.81	562548	8.67	974336	10.86	821116	15.86	894590	18.54
Lower Limit [d]	63209	4.60	254695	5.81	140637	7.67	243584	9.86	205279	14.86	223648	17.54

Lab Sample ID	IS 1 AREA	RT	IS 2 AREA	RT	IS 3 AREA	RT	IS 4 AREA	RT	IS 5 AREA	RT	IS 6 AREA	RT
OP35214-BS	107082	5.09	436062	6.31	236399	8.17	411230	10.36	348488	15.36	358084	18.03
OP35214-MB	105195	5.09	406075	6.31	217848	8.17	367522	10.36	309826	15.34	315407	18.03
ZZZZZZ	88694	5.09	345569	6.31	190659	8.17	319801	10.36	279697	15.35	299958	18.03
ZZZZZZ	132958	5.09	517694	6.31	279230	8.17	482405	10.36	419514	15.36	440324	18.05
ZZZZZZ	105850	5.09	413303	6.31	223895	8.17	378532	10.36	307667	15.34	327284	18.03
F78309-1	141627	5.09	575710	6.31	315552	8.17	539356	10.36	434993	15.35	440757	18.03
OP35214-MS	112017	5.10	450482	6.31	245154	8.17	416897	10.36	353944	15.35	364937	18.03
OP35214-MSD	116832	5.09	463880	6.31	253486	8.17	429731	10.36	351335	15.35	364349	18.03
ZZZZZZ	102920	5.09	398365	6.31	216294	8.17	359711	10.36	299170	15.34	317221	18.03
ZZZZZZ	97520	5.09	381766	6.31	208602	8.17	348738	10.36	300354	15.34	315786	18.03
ZZZZZZ	150915	5.09	598331	6.31	335797	8.17	581502	10.36	493995	15.37	391320	18.09
ZZZZZZ	153946	5.10	600264	6.31	315537	8.17	532344	10.37	465784	15.36	499475	18.04
ZZZZZZ	99433	5.10	387831	6.31	207023	8.17	367117	10.36	332187	15.35	348081	18.04
ZZZZZZ	125558	5.10	488220	6.31	263006	8.17	449598	10.36	393142	15.35	419398	18.04
ZZZZZZ	129838	5.09	508617	6.31	273463	8.17	460497	10.36	406272	15.35	427510	18.04
ZZZZZZ	112870	5.09	440077	6.31	239013	8.17	407107	10.36	364898	15.35	382041	18.03
ZZZZZZ	111264	5.09	437657	6.31	232381	8.17	398686	10.36	362176	15.35	390126	18.03
OP35095-MB	120609	5.09	464376	6.31	245855	8.17	421336	10.36	384138	15.35	406033	18.03
ZZZZZZ	114024	5.09	455097	6.31	250232	8.17	429640	10.36	388618	15.35	412130	18.03
ZZZZZZ	116553	5.09	458739	6.31	239812	8.17	404661	10.36	371477	15.35	400347	18.03
ZZZZZZ	106362	5.09	417376	6.31	227355	8.17	388027	10.36	343870	15.35	367003	18.03
ZZZZZZ	140855	5.09	550322	6.31	295231	8.17	523235	10.36	493457	15.35	509872	18.04
ZZZZZZ	118141	5.09	453708	6.31	241263	8.17	409360	10.36	364284	15.35	386091	18.04

IS 1 = 1,4-Dichlorobenzene-d4
IS 2 = Naphthalene-d8
IS 3 = Acenaphthene-D10
IS 4 = Phenanthrene-d10
IS 5 = Chrysene-d12
IS 6 = Perylene-d12

(a) Initial Cal is: SX763-ICC763 X015303.D 11/23/10 15:51
(b) Check Std Limit = -50 to + 100% of initial cal area.

Semivolatile Internal Standard Area Summary

Job Number: F78009
Account: TETTNOAK Tetra Tech, Inc
Project: Holloman AFB; Alamogordo, NM

Check Std:	SX770-CC763	**Injection Date:**	12/01/10
Lab File ID:	X015458.D	**Injection Time:**	09:18
Instrument ID:	GCMSX	**Method:**	SW846 8270D

Lab	IS 1		IS 2		IS 3		IS 4		IS 5		IS 6	
Sample ID	**AREA**	**RT**	**AREA**	**RT**	**AREA**	**RT**	**AREA**	**RT**	**AREA**	**RT**	**AREA**	**RT**

(c) Upper Limit = + 100% of check standard area; Retention time + 0.5 minutes.
(d) Lower Limit = -50% of check standard area; Retention time -0.5 minutes.

Semivolatile Surrogate Recovery Summary

Job Number: F78009
Account: TETTNOAK Tetra Tech, Inc
Project: Holloman AFB; Alamogordo, NM

Method: SW846 8270D **Matrix:** AQ

Samples and QC shown here apply to the above method

Lab Sample ID	Lab File ID	S1	S2	S3	S4	S5	S6
F78009-36	U022584.D	47.0	37.0	89.0	90.0	80.0	81.0
F78009-37	U022585.D	44.0	34.0	84.0	81.0	74.0	69.0
OP35095-BS	U022582.D	48.0	30.0	89.0	90.0	79.0	85.0
OP35095-BS	L049153.D	53.0	35.0	92.0	85.0	87.0	90.0
OP35095-MB	U022583.D	37.0	23.0	78.0	79.0	70.0	86.0
OP35095-MB	L049154.D	40.0	25.0	83.0	74.0	76.0	79.0
OP35095-MB	X015441.D	36.0	22.0	76.0	68.0	70.0	84.0
OP35095-MB	X015478.D	37.0	22.0	86.0	68.0	73.0	77.0
OP35095-MS	U022587.D	64.0*	50.0*	88.0	88.0	78.0	81.0
OP35095-MSD	U022588.D	55.0	41.0*	85.0	81.0	76.0	78.0

Surrogate Compounds	Recovery Limits
S1 = 2-Fluorophenol	14-62%
S2 = Phenol-d5	10-40%
S3 = 2,4,6-Tribromophenol	33-118%
S4 = Nitrobenzene-d5	42-108%
S5 = 2-Fluorobiphenyl	40-106%
S6 = Terphenyl-d14	39-121%

Initial Calibration Summary

Job Number: F78009
Account: TETTNOAK Tetra Tech, Inc
Project: Holloman AFB; Alamogordo, NM

Sample: SL2516-ICC2516
Lab FileID: L049102.D

Response Factor Report MSBNA02

Method : C:\msdchem\2\METHODS\app9D.m (RTE Integrator)
Title : SW846 8270D OR EPA 625
Last Update : Mon Nov 29 05:58:29 2010
Response via : Initial Calibration

Calibration Files
5 =L049105.D 25 =L049107.D 50 =L049110.D 75 =L049111.D
100 =L049112.D 125 =L049113.D icv =L049116.D 10 =L049108.D
200 =L049115.D =

Compound	5	25	50	75	100	125	icv	10	200	Avg	%RSD
1) I 1,4-Dichlorobenzene-d ----------ISTD----------											
2) 1,4-Dioxane	0.578	0.569	0.558	0.564	0.543	0.547				0.560	2.38
3) N-nitrosodimethylamine	0.704	0.743	0.713	0.700	0.679	0.684				0.704	3.29
4) Pyridine	1.509	1.528	1.444	1.451	1.388	1.405				1.454	3.80
5) Benzaldehyde	1.141	1.229	1.132	1.173	1.031	0.967				1.112	8.66
6) Aniline	2.386	2.136	1.949	1.901	1.699	1.653				1.954	14.08
7) 2-Fluorophenol	1.361	1.337	1.231	1.220	1.114	1.105				1.228	8.75
8) bis(2-Chloroethyl)ether	1.392	1.362	1.307	1.292	1.217	1.196				1.294	5.97
9) Phenol-d5	1.768	1.697	1.555	1.522	1.377	1.334				1.542	11.09
10) Phenol	2.022	1.883	1.672	1.625	1.442	1.397				1.673	14.57
11) 2-Chlorophenol	1.446	1.449	1.401	1.403	1.323	1.294				1.386	4.62
12) 1,3-Dichlorobenzene	1.678	1.616	1.539	1.487	1.407	1.378				1.517	7.71
13) 1,4-Dichlorobenzene	1.608	1.579	1.448	1.448	1.357	1.334				1.462	7.68
14) 1,2-Dichlorobenzene	1.617	1.520	1.417	1.384	1.291	1.270				1.417	9.42
15) Benzyl alcohol	0.921	0.946	0.938	0.954	0.895	0.898				0.925	2.68
16) bis(2-chloroisopropyl)ether	2.167	1.997	1.832	1.784	1.605	1.550				1.822	12.79
17) 2-Methylphenol	1.375	1.298	1.242	1.241	1.160	1.138				1.242	7.06
18) Acetophenone	2.057	1.946	1.727	1.727	1.576	1.525				1.760	11.75
19) Hexachloroethane	0.528	0.560	0.530	0.529	0.498	0.487				0.522	4.96
20) N-Nitroso-di-n-propylamine	0.963	0.940	0.888	0.881	0.792	0.757				0.870	9.32
21) 3&4-Methylphenol	1.396	1.362	1.250	1.241	1.136	1.091				1.246	9.64
22) I Naphthalene-d8 ----------ISTD----------											
23) Nitrobenzene-d5											

Initial Calibration Summary

Job Number: F78009
Account: TETTNOAK Tetra Tech, Inc
Project: Holloman AFB; Alamogordo, NM

Sample: SL2516-ICC2516
Lab FileID: L049102.D

```
            0.338 0.341 0.351 0.346 0.339 0.328                      0.341    2.32
24)  Nitrobenzene
            0.346 0.343 0.344 0.337 0.326 0.312                      0.335    3.99
25)  Isophorone
            0.705 0.649 0.671 0.647 0.625 0.608                      0.651    5.31
26)  2-Nitrophenol
            0.181 0.196 0.208 0.204 0.205 0.195                      0.198    5.00
27)  2,4-Dimethylphenol
            0.369 0.331 0.335 0.323 0.308 0.301                      0.328    7.30
28)  bis(2-Chloroethoxy)methane
            0.436 0.386 0.387 0.375 0.362 0.347                      0.382    7.97
29)  Benzoic Acid
            0.072 0.174 0.216 0.227 0.247 0.249                      0.198   33.96
             ---- Quadratic regr., Force(0,0) ----  Coefficient =  0.9985
               Response Ratio = 0.00000 + 0.18857 *A + 0.02051 *A^2

30)  2,4-Dichlorophenol
            0.325 0.307 0.315 0.306 0.290 0.279                      0.304    5.52
31)  1,2,4-Trichlorobenzene
            0.411 0.352 0.351 0.330 0.322 0.305                      0.345   10.70
32)  Naphthalene
            1.116 1.166 0.890 0.854 0.801 0.750                      0.930   18.43
33)  alpha-terpineol
            0.286 0.249 0.247 0.239 0.225 0.211                      0.243   10.59
34)  4-Chloroaniline
            0.457 0.426 0.426 0.419 0.399 0.377                      0.417    6.53
35)  2,6-Dichlorophenol
            0.323 0.292 0.296 0.284 0.271 0.262                      0.288    7.40
36)  Hexachlorobutadiene
            0.178 0.166 0.164 0.155 0.151 0.146                      0.160    7.41
37)  Caprolactam
            0.103 0.115 0.128 0.131 0.133 0.125                      0.123    9.15
38)  4-Chloro-3-methylphenol
            0.299 0.285 0.296 0.289 0.279 0.270                      0.286    3.73
39)  2-Methylnaphthalene
            0.737 0.673 0.649 0.625 0.598 0.570                      0.642    9.19
40)  1-Methylnaphthalene
            0.740 0.658 0.653 0.620 0.602 0.565                      0.640    9.39
41)  1,2,4,5-Tetrachlorobenzene
            0.370 0.308 0.303 0.286 0.267 0.250                      0.297   14.06

42) I   Acenaphthene-d10      ----------------ISTD---------------------
43)  Hexachlorocyclopentadiene
            0.248 0.312 0.324 0.318 0.305 0.302                      0.302    9.04
44)  2,4,6-Trichlorophenol
            0.403 0.434 0.410 0.400 0.385 0.377                      0.402    4.98
45)  2,4,5-Trichlorophenol
            0.445 0.447 0.424 0.420 0.401 0.400                      0.423    4.86
46)  2-Fluorobiphenyl
            1.461 1.422 1.323 1.254 1.190 1.154                      1.301    9.53
47)  1,1'-Biphenyl
            1.823 1.865 1.715 1.661 1.568 1.549                      1.697    7.65
48)  2-Chloronaphthalene
            1.318 1.290 1.171 1.119 1.054 1.027                      1.163   10.35
49)  2-Nitroaniline
            0.248 0.330 0.345 0.342 0.337 0.341                      0.324   11.53
50)  m-Dinitrobenzene
            0.173 0.238 0.248 0.240 0.241 0.237                      0.230   12.26
51)  Acenaphthylene
            2.004 1.956 1.776 1.707 1.607 1.550                      1.767   10.40
```

Initial Calibration Summary

Job Number: F78009
Account: TETTNOAK Tetra Tech, Inc
Project: Holloman AFB; Alamogordo, NM

Sample: SL2516-ICC2516
Lab FileID: L049102.D

```
52)  Dimethylphthalate
           1.491 1.436 1.360 1.306 1.239 1.218                    1.342    8.07
53)  2,6-Dinitrotoluene
           0.278 0.323 0.326 0.318 0.306 0.308                    0.310    5.70
54)  Acenaphthene
           1.199 1.213 1.103 1.048 1.012 0.980                    1.093    8.89
55)  3-Nitroaniline
           0.314 0.384 0.392 0.379 0.381 0.375                    0.371    7.70
56)  2,4-Dinitrophenol
           0.048 0.150 0.187 0.202 0.218 0.220                    0.171   38.25
            ---- Quadratic regr., Force(0,0) ----  Coefficient =  0.9981
              Response Ratio = 0.00000 + 0.16476 *A + 0.01873 *A^2

57)  Dibenzofuran
           1.826 1.729 1.538 1.460 1.380 1.339                    1.546   12.61
58)  2,4-Dinitrotoluene
           0.320 0.394 0.383 0.363 0.354 0.353                    0.361    7.21
59)  4-Nitrophenol
           0.135 0.176 0.180 0.176 0.182 0.179                    0.172   10.44
60)  2,3,4,6-Tetrachlorophenol
           0.330 0.332 0.329 0.324 0.309 0.305                    0.321    3.54
61)  Fluorene
           1.413 1.430 1.316 1.263 1.205 1.163                    1.298    8.36
62)  4-Chlorophenyl-phenylether
           0.747 0.670 0.623 0.591 0.559 0.542                    0.622   12.32
63)  Diethylphthalate
           1.251 1.292 1.251 1.214 1.161 1.119                    1.214    5.31
64)  4-Nitroaniline
           0.285 0.341 0.353 0.358 0.363 0.358                    0.343    8.55

65) I   Phenanthrene-d10      ----------------ISTD---------------------
66)  4,6-Dinitro-2-methylphenol
           0.079 0.144 0.156 0.155 0.159 0.159                    0.142   22.18
            ---- Quadratic regr., Force(0,0) ----  Coefficient =  0.9996
              Response Ratio = 0.00000 + 0.14891 *A + 0.00352 *A^2

67)  Diphenylamine
           0.709 0.692 0.654 0.618 0.588 0.569                    0.638    8.78
68)  n-Nitrosodiphenylamine
           0.590 0.576 0.545 0.515 0.490 0.474                    0.532    8.78
69)  1,2-Diphenylhydrazine
           0.702 0.720 0.687 0.661 0.633 0.610                    0.669    6.31
70)  2,4,6-Tribromophenol
           0.103 0.102 0.097 0.090 0.086 0.085                    0.094    8.31
71)  4-Bromophenyl-phenylether
           0.205 0.212 0.202 0.193 0.183 0.179                    0.196    6.60
72)  Hexachlorobenzene
           0.236 0.228 0.211 0.201 0.191 0.187                    0.209    9.50
73)  Simazine
           0.110 0.131 0.131 0.124 0.120 0.118                    0.122    6.58
74)  Atrazine
           0.213 0.238 0.227 0.220 0.212 0.201                    0.219    5.97
75)  Pentachlorophenol
           0.064 0.111 0.119 0.117 0.119 0.119                    0.108   20.09
            ---- Quadratic regr., Force(0,0) ----  Coefficient =  0.9996
              Response Ratio = 0.00000 + 0.11456 *A + 0.00141 *A^2

76)  Phenanthrene
           1.200 1.189 1.036 0.995 0.944 0.910                    1.046   11.78
77)  Anthracene
```

Initial Calibration Summary

Job Number: F78009
Account: TETTNOAK Tetra Tech, Inc
Project: Holloman AFB; Alamogordo, NM

Sample: SL2516-ICC2516
Lab FileID: L049102.D

```
            1.125 1.161 1.068 1.016 0.965 0.928                        1.044    8.73
 78)  Carbazole
            1.090 1.096 1.025 0.977 0.925 0.892                        1.001    8.46
 79)  Di-n-butylphthalate
            0.946 1.107 1.076 1.033 0.982 0.945                        1.015    6.73
 80)  Fluoranthene
            1.134 1.211 1.112 1.077 1.001 0.974                        1.085    8.06

 81) I   Chrysene-d12          ----------------ISTD---------------------
 82)  Benzidine
            0.532 0.809 0.909 0.895 0.895 0.877                        0.820   17.73
 83)  Pyrene
            1.418 1.425 1.392 1.319 1.289 1.242                        1.347    5.59
 84)  Terphenyl-d14
            0.769 0.799 0.805 0.772 0.748 0.729                        0.770    3.78
 85)  Butylbenzylphthalate
            0.354 0.509 0.557 0.533 0.545 0.530                        0.505   15.00
 86)  3,3'-Dichlorobenzidine
            0.274 0.388 0.421 0.418 0.410 0.410                        0.387   14.58
 87)  Benzo[a]anthracene
            1.057 1.143 1.157 1.124 1.113 1.101                        1.116    3.15
 88)  Chrysene
            1.175 1.111 1.092 1.057 1.024 1.012                        1.079    5.62
 89)  bis(2-Ethylhexyl)phthalate
            0.449 0.658 0.717 0.696 0.695 0.670                        0.648   15.40

 90) I   Perylene-d12          ----------------ISTD---------------------
 91)  Di-n-octylphthalate
            0.569 1.051 1.166 1.138 1.080 1.007                        1.002   21.95
             ---- Quadratic regr., Force(0,0) ----  Coefficient =  0.9984
               Response Ratio = 0.00000 + 1.25362 *A + -0.07516 *A^2

 92)  Benzo[b]fluoranthene
            1.051 1.170 1.147 1.117 1.058 1.013                        1.093    5.59
 93)  Benzo[k]fluoranthene
            1.165 1.143 1.076 1.055 0.959 0.943                        1.057    8.67
 94)  Benzo[a]pyrene
            0.979 1.118 1.091 1.071 1.021 0.993                        1.046    5.37
 95)  Indeno[1,2,3-cd]pyrene
            0.876 1.058 1.062 1.084 1.063 1.050                        1.032    7.49
 96)  Dibenz[a,h]anthracene
            0.962 1.073 1.077 1.068 1.025 1.015                        1.037    4.34
 97)  Benzo[g,h,i]perylene
            1.182 1.230 1.193 1.183 1.151 1.116                        1.176    3.29

 98) I   1,4-Dichlorobenzene-d ----------------ISTD---------------------
 99)  2-Picoline
            1.572 1.499 1.406 1.382 1.332 1.284       1.566            1.434    7.88
100)  N-Nitrosomethylethylamine
            0.767 0.728 0.696 0.702 0.692 0.688       0.725            0.714    3.96
101)  Methyl methanesulfonate
            0.756 0.703 0.681 0.671 0.663 0.626       0.708            0.687    5.98
102)  N-Nitrosodiethylamine
            0.634 0.662 0.653 0.640 0.632 0.614       0.654            0.641    2.60
103)  Ethyl methanesulfonate
            1.063 1.009 0.962 0.942 0.936 0.891       1.043            0.978    6.39
104)  Pentachloroethane
            0.524 0.510 0.492 0.488 0.469 0.455       0.520            0.494    5.25
105)  N-Nitrosopyrrolidine
            0.630 0.720 0.724 0.745 0.749 0.716       0.662            0.707    6.24
```

Initial Calibration Summary

Job Number: F78009 **Sample:** SL2516-ICC2516
Account: TETTNOAK Tetra Tech, Inc **Lab FileID:** L049102.D
Project: Holloman AFB; Alamogordo, NM

```
106)  N-Nitrosomorpholine
            0.810 0.775 0.732 0.721 0.705 0.669       0.800         0.744    7.00
107)  O-Toluidine
            2.211 2.072 1.931 1.843 1.765 1.701       2.168         1.956   10.19

108) I   Naphthalene-d8A       ----------------ISTD---------------------
109)  N-Nitrosopiperidine
            0.237 0.249 0.242 0.239 0.240 0.230       0.242         0.240    2.33
110)  A,A-Dimethylphenethylamine
            0.821 1.028 1.029 1.065 1.147 0.987       0.934         1.001   10.33
             ---- Quadratic regr., Force(0,0) ----  Coefficient =  0.9909
               Response Ratio = 0.00000 + 1.14113 *A + -0.03595 *A^2

111)  Hexachloropropene
            0.168 0.179 0.179 0.177 0.179 0.172       0.171         0.175    2.58
112)  p-Phenylenediamine
            0.376 0.401 0.381 0.328 0.317 0.311       0.390         0.358   10.50
113)  N-Nitrosodi-n-butylamine
            0.216 0.290 0.276 0.260 0.260 0.244       0.279         0.261    9.48
114)  Isosafrole
            0.272 0.280 0.268 0.260 0.258 0.244       0.268         0.264    4.39

115) I   Acenaphthene-d10A     ----------------ISTD---------------------
116)  Safrole
            0.535 0.544 0.523 0.512 0.498 0.481       0.522         0.517    4.19
117)  1-Chloronaphthalene
            1.305 1.177 1.075 1.008 0.961 0.942       1.202         1.096   12.46
118)  Diphenyl Ether
            0.894 0.814 0.771 0.742 0.704 0.689       0.862         0.782    9.97
119)  1,4-Naphthoquinone
            0.393 0.442 0.421 0.367 0.355 0.379       0.423         0.397    8.16
120)  Pentachlorobenzene
            0.520 0.482 0.449 0.434 0.419 0.405       0.498         0.458    9.31
121)  1-Naphthylamine
            1.111 1.152 1.103 1.068 1.045 1.007       1.101         1.084    4.44
122)  2-Naphthylamine
            1.220 1.222 1.134 1.112 1.079 1.030       1.209         1.144    6.64
123)  5-Nitro-o-toluidine
            0.212 0.338 0.361 0.380 0.387 0.370       0.260         0.330   20.48
             ---- Quadratic regr., Force(0,0) ----  Coefficient =  0.9982
               Response Ratio = 0.00000 + 0.36527 *A + 0.00380 *A^2


124) I   Phenanthrene-d10A     ----------------ISTD---------------------
125)  1,3,5-Trinitrobenzene
            0.052 0.103 0.131 0.163 0.182 0.174       0.068         0.125   41.72
             ---- Quadratic regr., Force(0,0) ----  Coefficient =  0.9922
               Response Ratio = 0.00000 + 0.11970 *A + 0.01971 *A^2

126)  Diallate
            0.261 0.289 0.272 0.272 0.257 0.252       0.266         0.267    4.61
127)  Phenacetin
            0.280 0.352 0.339 0.347 0.358 0.341       0.303         0.332    8.74
128)  4-aminobiphenyl
            0.751 0.798 0.731 0.684 0.605 0.564       0.733         0.695   12.04
129)  Pentachloronitrobenzene
            0.057 0.074 0.071 0.070 0.068 0.067       0.066         0.068    7.94
130)  Pronamide
            0.208 0.287 0.287 0.295 0.288 0.278       0.229         0.267   12.90
131)  4-Nitroquinoline 1-Oxide
```

```
            0.013 0.033 0.047 0.055 0.063 0.068       0.015         0.042   53.08
             ---- Quadratic regr., Force(0,0) ----  Coefficient =  0.9988
               Response Ratio = 0.00000 + 0.03142 *A + 0.01209 *A^2

132)  Methapyrilene
            0.099 0.150 0.140 0.163 0.168 0.162       0.114         0.142   18.66
133)  Isodrin
            0.117 0.117 0.106 0.109 0.106 0.102       0.111         0.110    5.14

134) I   Chrysene-d12A         ----------------ISTD---------------------
135)  Aramite
            0.017 0.030 0.035 0.037 0.040 0.038       0.020         0.031   29.06
             ---- Quadratic regr., Force(0,0) ----  Coefficient =  0.9970
               Response Ratio = 0.00000 + 0.03301 *A + 0.00190 *A^2

136)  p-(Dimethylamine)azobenzene
            0.220 0.308 0.295 0.288 0.287 0.278       0.258         0.276   10.59
137)  Chlorobenzilate
            0.293 0.357 0.339 0.331 0.331 0.316       0.320         0.327    6.13
138)  Kepone
            0.030 0.072 0.079 0.081 0.087 0.077       0.041         0.066   33.08
             ---- Quadratic regr., Force(0,0) ----  Coefficient =  0.9925
               Response Ratio = 0.00000 + 0.08183 *A + -0.00065 *A^2

139)  3,3'-Dimethylbenzidine
            0.380 0.664 0.651 0.590 0.535 0.696       0.478         0.571   19.93
140)  2-Acetylaminofluorene
            0.244 0.452 0.479 0.499 0.500 0.528       0.309         0.430   25.37
             ---- Quadratic regr., Force(0,0) ----  Coefficient =  0.9992
               Response Ratio = 0.00000 + 0.43392 *A + 0.02959 *A^2


141) I   Perylene-d12A         ----------------ISTD---------------------
142)  7,12-Dimethylbenz(a)anthracene
            0.402 0.515 0.524 0.508 0.515 0.452       0.461         0.482    9.43
143)  Hexachlorophene
                  0.001 0.018 0.032 0.037 0.048             0.057   0.032   63.35
             ---- Quadratic regr., Force(0,0) ----  Coefficient =  0.9897
               Response Ratio = 0.00000 + 0.01673 *A + 0.00084 *A^2

144)  3-Methylcholanthrene
            0.431 0.543 0.536 0.537 0.523 0.520       0.463         0.508    8.47
145)  Dibenz(a,j)acridine
            0.736 0.899 0.868 0.879 0.854 0.882       0.807         0.847    6.70
 ---------------------------------------------------------------------------
 (#) = Out of Range  ###  Number of calibration levels exceeded format  ###

           app9D.m           Mon Nov 29 06:01:06 2010
```

Initial Calibration Verification

Job Number: F78009
Account: TETTNOAK Tetra Tech, Inc
Project: Holloman AFB; Alamogordo, NM

Sample: SL2516-ICV2516
Lab FileID: L049116.D

Evaluate Continuing Calibration Report

```
Data File : C:\msdchem\2\DATA\112410\L049116.D          Vial: 17
Acq On    : 24 Nov 2010   6:33 pm                   Operator: nancyf
Sample    : icv2516-50                              Inst    : MSBNA02
Misc      : op35019,sl2516,1000,,,1,1,water         Multiplr: 1.00
MS Integration Params: lscint.p

Method       : C:\msdchem\2\METHODS\app9D.m (RTE Integrator)
Title        : SW846 8270D OR EPA 625
Last Update  : Mon Nov 29 05:58:29 2010
Response via : Multiple Level Calibration

Min. RRF     :   0.000  Min. Rel. Area :  50%  Max. R.T. Dev  0.50min
Max. RRF Dev :  20%     Max. Rel. Area : 200%
```

		Compound	Amount	Calc.	%Drift	Area%	Dev(min)	R.T.
1	I	1,4-Dichlorobenzene-d4	40.000	40.000	0.0	155	0.00	4.95
2		1,4-Dioxane	50.000	48.744	2.5	0	-0.01	2.50
3		N-nitrosodimethylamine	50.000	49.077	1.8	0	-0.01	2.79
4		Pyridine	50.000	49.998	0.0	0	-0.01	2.82
5	P	Benzaldehyde	50.000	51.160	-2.3	0	0.00	4.61
6		Aniline	50.000	50.591	-1.2	0	0.00	4.70
7	S	2-Fluorophenol		----------NA----------				
8	P	bis(2-Chloroethyl)ether	50.000	51.056	-2.1	0	0.00	4.74
9	S	Phenol-d5		----------NA----------				
10	P	Phenol	50.000	56.144	-12.3	0	0.00	4.69
11	P	2-Chlorophenol	50.000	51.707	-3.4	0	0.00	4.79
12		1,3-Dichlorobenzene	50.000	51.121	-2.2	0	0.00	4.90
13	C	1,4-Dichlorobenzene	50.000	51.106	-2.2	0	0.00	4.96
14		1,2-Dichlorobenzene	50.000	50.885	-1.8	0	0.00	5.09
15		Benzyl alcohol	50.000	57.784	-15.6	0	0.00	5.06
16	P	bis(2-chloroisopropyl)eth	50.000	50.966	-1.9	0	0.00	5.16
17	P	2-Methylphenol	50.000	50.711	-1.4	0	0.00	5.16
18	P	Acetophenone	50.000	45.246	9.5	0	0.00	5.27
19	P	Hexachloroethane	50.000	53.167	-6.3	0	0.00	5.37
20	P	N-Nitroso-di-n-propylamin	50.000	46.554	6.9	0	0.00	5.27
21	P	3&4-Methylphenol	100.000	91.677	8.3	0	0.00	5.28
22	I	Naphthalene-d8	40.000	40.000	0.0	151	0.00	6.09
23	S	Nitrobenzene-d5		----------NA----------				
24	P	Nitrobenzene	50.000	53.611	-7.2	0	0.00	5.42
25	P	Isophorone	50.000	43.890	12.2	0	0.00	5.64
26	P	2-Nitrophenol	50.000	55.466	-10.9	0	0.00	5.71
27	P	2,4-Dimethylphenol	50.000	44.339	11.3	0	0.00	5.75
28	P	bis(2-Chloroethoxy)methan	50.000	51.964	-3.9	0	0.00	5.83
		----------	Amount	Calc.	%Drift		----------	
29		Benzoic Acid	100.000	106.813	-6.8	0	0.02	5.89
		----------	Amount	Calc.	%Drift		----------	
30	P	2,4-Dichlorophenol	50.000	53.093	-6.2	0	0.00	5.95
31		1,2,4-Trichlorobenzene	50.000	48.078	3.8	0	0.00	6.03
32	P	Naphthalene	50.000	46.919	6.2	0	0.00	6.11
33		alpha-terpineol	50.000	50.148	-0.3	0	0.00	6.12
34	P	4-Chloroaniline	50.000	30.633	38.7#	0	0.00	6.17
35		2,6-Dichlorophenol	50.000	51.915	-3.8	0	0.00	6.18
36	P	Hexachlorobutadiene	50.000	52.967	-5.9	0	0.00	6.25
37	P	Caprolactam	50.000	52.492	-5.0	0	0.00	6.57

Initial Calibration Verification

Job Number: F78009
Account: TETTNOAK Tetra Tech, Inc
Project: Holloman AFB; Alamogordo, NM

Sample: SL2516-ICV2516
Lab FileID: L049116.D

38	P	4-Chloro-3-methylphenol	50.000	53.014	-6.0	0	0.01	6.73
39	P	2-Methylnaphthalene	50.000	55.930	-11.9	0	0.00	6.90
40		1-Methylnaphthalene	50.000	49.637	0.7	0	0.00	7.03
41	P	1,2,4,5-Tetrachlorobenzen	50.000	48.042	3.9	0	0.00	7.12
42	I	Acenaphthene-d10	40.000	40.000	0.0	151	0.00	8.36
43	P	Hexachlorocyclopentadiene	50.000	57.037	-14.1	0	0.00	7.12
44	P	2,4,6-Trichlorophenol	50.000	51.446	-2.9	0	0.00	7.28
45	P	2,4,5-Trichlorophenol	50.000	51.942	-3.9	0	0.00	7.33
46	S	2-Fluorobiphenyl		----------NA----------				
47	P	1,1'-Biphenyl	50.000	45.967	8.1	0	0.00	7.52
48	P	2-Chloronaphthalene	50.000	48.743	2.5	0	0.00	7.54
49	P	2-Nitroaniline	50.000	69.042	-38.1#	0	0.00	7.70
50		m-Dinitrobenzene	50.000	56.705	-13.4	0	0.00	8.01
51	P	Acenaphthylene	50.000	51.006	-2.0	0	0.00	8.14
52	P	Dimethylphthalate	50.000	50.625	-1.3	0	0.00	7.99
53	P	2,6-Dinitrotoluene	50.000	52.537	-5.1	0	0.00	8.06
54	P	Acenaphthene	50.000	50.646	-1.3	0	0.00	8.41
55	P	3-Nitroaniline	50.000	34.479	31.0#	0	0.00	8.31
		----------	Amount	Calc.	%Drift	----------		
56	P	2,4-Dinitrophenol	100.000	104.478	-4.5	0	0.00	8.48
		----------	Amount	Calc.	%Drift	----------		
57	P	Dibenzofuran	50.000	52.569	-5.1	0	0.00	8.69
58	P	2,4-Dinitrotoluene	50.000	50.208	-0.4	0	0.00	8.69
59	P	4-Nitrophenol	100.000	97.938	2.1	0	0.02	8.65
60	P	2,3,4,6-Tetrachlorophenol	50.000	53.053	-6.1	0	0.00	8.91
61	P	Fluorene	50.000	51.370	-2.7	0	0.00	9.25
62	P	4-Chlorophenyl-phenylethe	50.000	49.850	0.3	0	0.00	9.27
63	P	Diethylphthalate	50.000	51.654	-3.3	0	0.00	9.14
64	P	4-Nitroaniline	50.000	57.269	-14.5	0	0.00	9.32
65	I	Phenanthrene-d10	40.000	40.000	0.0	148	0.00	10.87
		----------	Amount	Calc.	%Drift	----------		
66	P	4,6-Dinitro-2-methylpheno	100.000	108.471	-8.5	0	0.00	9.38
		----------	Amount	Calc.	%Drift	----------		
67		Diphenylamine	50.000	43.524	13.0	0	-0.01	9.48
68	P	n-Nitrosodiphenylamine	50.000	52.229	-4.5	0	-0.01	9.48
69		1,2-Diphenylhydrazine	50.000	52.459	-4.9	0	0.00	9.54
70	S	2,4,6-Tribromophenol		----------NA----------				
71	P	4-Bromophenyl-phenylether	50.000	52.627	-5.3	0	0.00	10.11
72	P	Hexachlorobenzene	50.000	50.933	-1.9	0	0.00	10.20
73		Simazine	50.000	72.146	-44.3#	0	0.00	10.43
74	P	Atrazine	50.000	49.686	0.6	0	0.00	10.49
		----------	Amount	Calc.	%Drift	----------		
75	P	Pentachlorophenol	100.000	111.995	-12.0	0	0.00	10.57
		----------	Amount	Calc.	%Drift	----------		
76	P	Phenanthrene	50.000	49.413	1.2	0	0.00	10.91
77	P	Anthracene	50.000	50.785	-1.6	0	0.00	10.99
78	P	Carbazole	50.000	55.083	-10.2	0	0.00	11.33
79	P	Di-n-butylphthalate	50.000	52.491	-5.0	0	0.00	12.10
80	P	Fluoranthene	50.000	49.054	1.9	0	0.00	13.08
81	I	Chrysene-d12	40.000	40.000	0.0	141	0.00	15.79
82		Benzidine	50.000	27.954	44.1#	0	-0.01	13.41

Initial Calibration Verification

Job Number: F78009
Account: TETTNOAK Tetra Tech, Inc
Project: Holloman AFB; Alamogordo, NM

Sample: SL2516-ICV2516
Lab FileID: L049116.D

83	P	Pyrene	50.000	52.502	-5.0	0	-0.01	13.49
84	S	Terphenyl-d14		----------NA----------				
85	P	Butylbenzylphthalate	50.000	56.978	-14.0	0	0.00	14.92
86	P	3,3'-Dichlorobenzidine	50.000	25.905	48.2#	0	0.00	15.81
87	P	Benzo[a]anthracene	50.000	52.717	-5.4	0	0.00	15.77
88	P	Chrysene	50.000	50.798	-1.6	0	0.00	15.84
89	P	bis(2-Ethylhexyl)phthalat	50.000	58.078	-16.2	0	0.00	16.10
90	I	Perylene-d12	40.000	40.000	0.0	132	0.00	18.30
		----------	Amount	Calc.	%Drift		----------	
91	P	Di-n-octylphthalate	50.000	56.276	-12.6	0	0.00	17.28
		----------	Amount	Calc.	%Drift		----------	
92	P	Benzo[b]fluoranthene	50.000	52.806	-5.6	0	0.00	17.68
93	P	Benzo[k]fluoranthene	50.000	53.572	-7.1	0	0.00	17.73
94	P	Benzo[a]pyrene	50.000	52.622	-5.2	0	0.00	18.20
95	P	Indeno[1,2,3-cd]pyrene	50.000	52.279	-4.6	0	0.00	19.88
96	P	Dibenz[a,h]anthracene	50.000	52.138	-4.3	0	0.00	19.93
97	P	Benzo[g,h,i]perylene	50.000	49.364	1.3	0	0.00	20.25
98	I	1,4-Dichlorobenzene-d4A	40.000	40.000	0.0	120	0.00	4.95
99		2-Picoline		----------NA----------				
100		N-Nitrosomethylethylamine		----------NA----------				
101		Methyl methanesulfonate		----------NA----------				
102		N-Nitrosodiethylamine		----------NA----------				
103		Ethyl methanesulfonate		----------NA----------				
104		Pentachloroethane		----------NA----------				
105		N-Nitrosopyrrolidine		----------NA----------				
106		N-Nitrosomorpholine		----------NA----------				
107		O-Toluidine		----------NA----------				
108	I	Naphthalene-d8A	40.000	40.000	0.0	122	0.00	6.09
109		N-Nitrosopiperidine		----------NA----------				
		----------	Amount	Calc.	%Drift		----------	
110		A,A-Dimethylphenethylamin		----------NA----------				
		----------	Amount	Calc.	%Drift		----------	
111		Hexachloropropene		----------NA----------				
112		p-Phenylenediamine		----------NA----------				
113		N-Nitrosodi-n-butylamine		----------NA----------				
114		Isosafrole		----------NA----------				
115	I	Acenaphthene-d10A	40.000	40.000	0.0	120	0.00	8.36
116		Safrole		----------NA----------				
117		1-Chloronaphthalene		----------NA----------				
118		Diphenyl Ether	50.000	58.331	-16.7	0	0.00	7.67
119		1,4-Naphthoquinone		----------NA----------				
120		Pentachlorobenzene		----------NA----------				
121		1-Naphthylamine		----------NA----------				
122		2-Naphthylamine		----------NA----------				
		----------	Amount	Calc.	%Drift		----------	
123		5-Nitro-o-toluidine		----------NA----------				
		----------	Amount	Calc.	%Drift		----------	
124	I	Phenanthrene-d10A	40.000	40.000	0.0	123	0.00	10.87

Initial Calibration Verification

Job Number: F78009
Account: TETTNOAK Tetra Tech, Inc
Project: Holloman AFB; Alamogordo, NM

Sample: SL2516-ICV2516
Lab FileID: L049116.D

			Amount	Calc.	%Drift		
125		1,3,5-Trinitrobenzene		NA			
			Amount	Calc.	%Drift		
126		Diallate		NA			
127		Phenacetin		NA			
128		4-aminobiphenyl		NA			
129		Pentachloronitrobenzene		NA			
130		Pronamide		NA			
			Amount	Calc.	%Drift		
131		4-Nitroquinoline 1-Oxide		NA			
			Amount	Calc.	%Drift		
132		Methapyrilene		NA			
133		Isodrin		NA			
134	I	Chrysene-d12A	40.000	40.000	0.0	102	0.00 15.79
			Amount	Calc.	%Drift		
135		Aramite		NA			
			Amount	Calc.	%Drift		
136		p-(Dimethylamine)azobenze		NA			
137		Chlorobenzilate		NA			
			Amount	Calc.	%Drift		
138		Kepone		NA			
			Amount	Calc.	%Drift		
139		3,3'-Dimethylbenzidine		NA			
			Amount	Calc.	%Drift		
140		2-Acetylaminofluorene		NA			
			Amount	Calc.	%Drift		
141	I	Perylene-d12A	40.000	40.000	0.0	109	0.00 18.30
142		7,12-Dimethylbenz(a)anthr		NA			
			Amount	Calc.	%Drift		
143		Hexachlorophene		NA			
			Amount	Calc.	%Drift		
144		3-Methylcholanthrene		NA			
145		Dibenz(a,j)acridine		NA			

(#) = Out of Range SPCC's out = 0 CCC's out = 0
L049116.D app9D.m Mon Nov 29 06:02:09 2010

6.7.2

6

Initial Calibration Verification

Job Number: F78009
Account: TETTNOAK Tetra Tech, Inc
Project: Holloman AFB; Alamogordo, NM

Sample: SL2516-ICV2516
Lab FileID: L049117.D

Evaluate Continuing Calibration Report

```
Data File : C:\msdchem\2\DATA\112410\L049117.D          Vial: 18
Acq On    : 24 Nov 2010   7:01 pm                   Operator: nancyf
Sample    : icv2516-50                              Inst    : MSBNA02
Misc      : op35019,sl2516,1000,,,1,1,water         Multiplr: 1.00
MS Integration Params: lscint.p

Method       : C:\msdchem\2\METHODS\app9D.m (RTE Integrator)
Title        : SW846 8270D OR EPA 625
Last Update  : Mon Nov 29 05:27:47 2010
Response via : Multiple Level Calibration

Min. RRF     :   0.000  Min. Rel. Area :  50%  Max. R.T. Dev  0.50min
Max. RRF Dev :  20%     Max. Rel. Area : 200%
```

		Compound	Amount	Calc.	%Drift	Area%	Dev(min)	R.T.
1	I	1,4-Dichlorobenzene-d4	40.000	40.000	0.0	0	0.00	4.95
2		1,4-Dioxane		NA				
3		N-nitrosodimethylamine		NA				
4		Pyridine	50.000	48.465	3.1	0	-0.03	2.81
5	P	Benzaldehyde		NA				
6		Aniline	50.000	59.194	-18.4	0	0.00	4.69
7	S	2-Fluorophenol		NA				
8	P	bis(2-Chloroethyl)ether		NA				
9	S	Phenol-d5		NA				
10	P	Phenol		NA				
11	P	2-Chlorophenol		NA				
12		1,3-Dichlorobenzene		NA				
13	C	1,4-Dichlorobenzene		NA				
14		1,2-Dichlorobenzene		NA				
15		Benzyl alcohol	50.000	53.474	-6.9	0	0.00	5.06
16	P	bis(2-chloroisopropyl)eth		NA				
17	P	2-Methylphenol		NA				
18	P	Acetophenone		NA				
19	P	Hexachloroethane		NA				
20	P	N-Nitroso-di-n-propylamin		NA				
21	P	3&4-Methylphenol		NA				
22	I	Naphthalene-d8	40.000	40.000	0.0	0	0.00	6.08
23	S	Nitrobenzene-d5		NA				
24	P	Nitrobenzene		NA				
25	P	Isophorone		NA				
26	P	2-Nitrophenol		NA				
27	P	2,4-Dimethylphenol		NA				
28	P	bis(2-Chloroethoxy)methan		NA				
		----------	Amount	Calc.	%Drift	----------		
29		Benzoic Acid		NA				
		----------	Amount	Calc.	%Drift	----------		
30	P	2,4-Dichlorophenol		NA				
31		1,2,4-Trichlorobenzene		NA				
32	P	Naphthalene		NA				
33		alpha-terpineol		NA				
34	P	4-Chloroaniline	50.000	57.679	-15.4	0	0.00	6.16
35		2,6-Dichlorophenol		NA				
36	P	Hexachlorobutadiene		NA				
37	P	Caprolactam		NA				

Initial Calibration Verification

Job Number: F78009
Account: TETTNOAK Tetra Tech, Inc
Project: Holloman AFB; Alamogordo, NM

Sample: SL2516-ICV2516
Lab FileID: L049117.D

38	P	4-Chloro-3-methylphenol		----------NA----------				
39	P	2-Methylnaphthalene	50.000	56.686	-13.4	0	0.00	6.90
40		1-Methylnaphthalene		----------NA----------				
41	P	1,2,4,5-Tetrachlorobenzen		----------NA----------				
42	I	Acenaphthene-d10	40.000	40.000	0.0	0	0.00	8.36
43	P	Hexachlorocyclopentadiene		----------NA----------				
44	P	2,4,6-Trichlorophenol		----------NA----------				
45	P	2,4,5-Trichlorophenol		----------NA----------				
46	S	2-Fluorobiphenyl		----------NA----------				
47	P	1,1'-Biphenyl		----------NA----------				
48	P	2-Chloronaphthalene		----------NA----------				
49	P	2-Nitroaniline	50.000	57.264	-14.5	0	0.00	7.69
50		m-Dinitrobenzene	50.000	59.161	-18.3	0	-0.01	8.00
51	P	Acenaphthylene		----------NA----------				
52	P	Dimethylphthalate		----------NA----------				
53	P	2,6-Dinitrotoluene		----------NA----------				
54	P	Acenaphthene		----------NA----------				
55	P	3-Nitroaniline	50.000	59.502	-19.0	0	0.00	8.31
		----------	Amount	Calc.	%Drift	----------		
56	P	2,4-Dinitrophenol		----------NA----------				
		----------	Amount	Calc.	%Drift	----------		
57	P	Dibenzofuran	50.000	57.327	-14.7	0	0.00	8.69
58	P	2,4-Dinitrotoluene		----------NA----------				
59	P	4-Nitrophenol		----------NA----------				
60	P	2,3,4,6-Tetrachlorophenol		----------NA----------				
61	P	Fluorene		----------NA----------				
62	P	4-Chlorophenyl-phenylethe		----------NA----------				
63	P	Diethylphthalate		----------NA----------				
64	P	4-Nitroaniline	50.000	62.890	-25.8#	0	0.00	9.31
65	I	Phenanthrene-d10	40.000	40.000	0.0	0	0.00	10.86
		----------	Amount	Calc.	%Drift	----------		
66	P	4,6-Dinitro-2-methylpheno		----------NA----------				
		----------	Amount	Calc.	%Drift	----------		
67		Diphenylamine		----------NA----------				
68	P	n-Nitrosodiphenylamine		----------NA----------				
69		1,2-Diphenylhydrazine		----------NA----------				
70	S	2,4,6-Tribromophenol		----------NA----------				
71	P	4-Bromophenyl-phenylether		----------NA----------				
72	P	Hexachlorobenzene		----------NA----------				
73		Simazine		----------NA----------				
74	P	Atrazine		----------NA----------				
		----------	Amount	Calc.	%Drift	----------		
75	P	Pentachlorophenol		----------NA----------				
		----------	Amount	Calc.	%Drift	----------		
76	P	Phenanthrene		----------NA----------				
77	P	Anthracene		----------NA----------				
78	P	Carbazole	50.000	56.149	-12.3	0	0.00	11.32
79	P	Di-n-butylphthalate		----------NA----------				
80	P	Fluoranthene		----------NA----------				
81	I	Chrysene-d12	40.000	40.000	0.0	0	-0.01	15.78
82		Benzidine	50.000	53.277	-6.6	0	-0.02	13.41

Initial Calibration Verification

Job Number: F78009
Account: TETTNOAK Tetra Tech, Inc
Project: Holloman AFB; Alamogordo, NM

Sample: SL2516-ICV2516
Lab FileID: L049117.D

83	P	Pyrene		----------NA----------				
84	S	Terphenyl-d14		----------NA----------				
85	P	Butylbenzylphthalate		----------NA----------				
86	P	3,3'-Dichlorobenzidine	50.000	50.261	-0.5	0	0.00	15.81
87	P	Benzo[a]anthracene		----------NA----------				
88	P	Chrysene		----------NA----------				
89	P	bis(2-Ethylhexyl)phthalat		----------NA----------				
90	I	Perylene-d12	40.000	40.000	0.0	0	0.00	18.29
		----------	Amount	Calc.	%Drift		----------	
91	P	Di-n-octylphthalate		----------NA----------				
		----------	Amount	Calc.	%Drift		----------	
92	P	Benzo[b]fluoranthene		----------NA----------				
93	P	Benzo[k]fluoranthene		----------NA----------				
94	P	Benzo[a]pyrene		----------NA----------				
95	P	Indeno[1,2,3-cd]pyrene		----------NA----------				
96	P	Dibenz[a,h]anthracene		----------NA----------				
97	P	Benzo[g,h,i]perylene		----------NA----------				
98	I	1,4-Dichlorobenzene-d4A	40.000	40.000	0.0	0	0.00	4.95
99		2-Picoline		----------NA----------				
100		N-Nitrosomethylethylamine		----------NA----------				
101		Methyl methanesulfonate		----------NA----------				
102		N-Nitrosodiethylamine		----------NA----------				
103		Ethyl methanesulfonate		----------NA----------				
104		Pentachloroethane		----------NA----------				
105		N-Nitrosopyrrolidine		----------NA----------				
106		N-Nitrosomorpholine		----------NA----------				
107		O-Toluidine		----------NA----------				
108	I	Naphthalene-d8A	40.000	40.000	0.0	0	0.00	6.08
109		N-Nitrosopiperidine		----------NA----------				
		----------	Amount	Calc.	%Drift		----------	
110		A,A-Dimethylphenethylamin		----------NA----------				
		----------	Amount	Calc.	%Drift		----------	
111		Hexachloropropene		----------NA----------				
112		p-Phenylenediamine		----------NA----------				
113		N-Nitrosodi-n-butylamine		----------NA----------				
114		Isosafrole		----------NA----------				
115	I	Acenaphthene-d10A	40.000	40.000	0.0	0	0.00	8.36
116		Safrole		----------NA----------				
117		1-Chloronaphthalene		----------NA----------				
118		Diphenyl Ether	50.000	59.198	-18.4	0	0.00	7.67
119		1,4-Naphthoquinone		----------NA----------				
120		Pentachlorobenzene		----------NA----------				
121		1-Naphthylamine		----------NA----------				
122		2-Naphthylamine		----------NA----------				
		----------	Amount	Calc.	%Drift		----------	
123		5-Nitro-o-toluidine		----------NA----------				
		----------	Amount	Calc.	%Drift		----------	
124	I	Phenanthrene-d10A	40.000	40.000	0.0	0	0.00	10.86

Initial Calibration Verification

Job Number: F78009
Account: TETTNOAK Tetra Tech, Inc
Project: Holloman AFB; Alamogordo, NM

Sample: SL2516-ICV2516
Lab FileID: L049117.D

			Amount	Calc.	%Drift		
125		1,3,5-Trinitrobenzene		NA			
126		Diallate		NA			
127		Phenacetin		NA			
128		4-aminobiphenyl		NA			
129		Pentachloronitrobenzene		NA			
130		Pronamide		NA			
131		4-Nitroquinoline 1-Oxide		NA			
132		Methapyrilene		NA			
133		Isodrin		NA			
134	I	Chrysene-d12A	40.000	40.000	0.0	0	0.00	15.78
135		Aramite		NA			
136		p-(Dimethylamine)azobenze		NA			
137		Chlorobenzilate		NA			
138		Kepone		NA			
139		3,3'-Dimethylbenzidine		NA			
140		2-Acetylaminofluorene		NA			
141	I	Perylene-d12A	40.000	40.000	0.0	0	-0.01	18.29
142		7,12-Dimethylbenz(a)anthr		NA			
143		Hexachlorophene		NA			
144		3-Methylcholanthrene		NA			
145		Dibenz(a,j)acridine		NA			

(#) = Out of Range SPCC's out = 0 CCC's out = 1
L048939.D app9D.m Mon Nov 29 05:50:24 2010

6.7.3

6

Initial Calibration Verification

Job Number: F78009
Account: TETTNOAK Tetra Tech, Inc
Project: Holloman AFB; Alamogordo, NM

Sample: SL2516-ICV2516
Lab FileID: L049118.D

Evaluate Continuing Calibration Report

```
Data File : C:\msdchem\2\DATA\112410\L049118.D          Vial: 19
Acq On    : 24 Nov 2010   7:29 pm                   Operator: nancyf
Sample    : icv2516-50                              Inst    : MSBNA02
Misc      : op35019,sl2516,1000,,,1,1,water         Multiplr: 1.00
MS Integration Params: lscint.p

Method       : C:\msdchem\2\METHODS\app9D.m (RTE Integrator)
Title        : SW846 8270D OR EPA 625
Last Update  : Mon Nov 29 05:27:47 2010
Response via : Multiple Level Calibration

Min. RRF     :   0.000  Min. Rel. Area :  50%  Max. R.T. Dev  0.50min
Max. RRF Dev :  20%     Max. Rel. Area : 200%
```

		Compound	Amount	Calc.	%Drift	Area%	Dev(min)	R.T.
1	I	1,4-Dichlorobenzene-d4	40.000	40.000	0.0	0	0.00	4.95
2		1,4-Dioxane		NA				
3		N-nitrosodimethylamine		NA				
4		Pyridine		NA				
5	P	Benzaldehyde		NA				
6		Aniline		NA				
7	S	2-Fluorophenol		NA				
8	P	bis(2-Chloroethyl)ether		NA				
9	S	Phenol-d5		NA				
10	P	Phenol		NA				
11	P	2-Chlorophenol		NA				
12		1,3-Dichlorobenzene		NA				
13	C	1,4-Dichlorobenzene		NA				
14		1,2-Dichlorobenzene		NA				
15		Benzyl alcohol		NA				
16	P	bis(2-chloroisopropyl)eth		NA				
17	P	2-Methylphenol		NA				
18	P	Acetophenone		NA				
19	P	Hexachloroethane		NA				
20	P	N-Nitroso-di-n-propylamin		NA				
21	P	3&4-Methylphenol		NA				
22	I	Naphthalene-d8	40.000	40.000	0.0	0	0.00	6.08
23	S	Nitrobenzene-d5		NA				
24	P	Nitrobenzene		NA				
25	P	Isophorone		NA				
26	P	2-Nitrophenol		NA				
27	P	2,4-Dimethylphenol		NA				
28	P	bis(2-Chloroethoxy)methan		NA				
		----------	Amount	Calc.	%Drift	----------		
29		Benzoic Acid		NA				
		----------	Amount	Calc.	%Drift	----------		
30	P	2,4-Dichlorophenol		NA				
31		1,2,4-Trichlorobenzene		NA				
32	P	Naphthalene		NA				
33		alpha-terpineol		NA				
34	P	4-Chloroaniline		NA				
35		2,6-Dichlorophenol		NA				
36	P	Hexachlorobutadiene		NA				
37	P	Caprolactam		NA				

Initial Calibration Verification

Job Number: F78009
Account: TETTNOAK Tetra Tech, Inc
Project: Holloman AFB; Alamogordo, NM

Sample: SL2516-ICV2516
Lab FileID: L049118.D

38	P	4-Chloro-3-methylphenol		----------NA----------				
39	P	2-Methylnaphthalene		----------NA----------				
40		1-Methylnaphthalene		----------NA----------				
41	P	1,2,4,5-Tetrachlorobenzen		----------NA----------				
42	I	Acenaphthene-d10	40.000	40.000	0.0	0	0.00	8.36
43	P	Hexachlorocyclopentadiene		----------NA----------				
44	P	2,4,6-Trichlorophenol		----------NA----------				
45	P	2,4,5-Trichlorophenol		----------NA----------				
46	S	2-Fluorobiphenyl		----------NA----------				
47	P	1,1'-Biphenyl		----------NA----------				
48	P	2-Chloronaphthalene		----------NA----------				
49	P	2-Nitroaniline		----------NA----------				
50		m-Dinitrobenzene		----------NA----------				
51	P	Acenaphthylene		----------NA----------				
52	P	Dimethylphthalate		----------NA----------				
53	P	2,6-Dinitrotoluene		----------NA----------				
54	P	Acenaphthene		----------NA----------				
55	P	3-Nitroaniline		----------NA----------				
		----------	Amount	Calc.	%Drift	----------		
56	P	2,4-Dinitrophenol		----------NA----------				
		----------	Amount	Calc.	%Drift	----------		
57	P	Dibenzofuran		----------NA----------				
58	P	2,4-Dinitrotoluene		----------NA----------				
59	P	4-Nitrophenol		----------NA----------				
60	P	2,3,4,6-Tetrachlorophenol		----------NA----------				
61	P	Fluorene		----------NA----------				
62	P	4-Chlorophenyl-phenylethe		----------NA----------				
63	P	Diethylphthalate		----------NA----------				
64	P	4-Nitroaniline		----------NA----------				
65	I	Phenanthrene-d10	40.000	40.000	0.0	0	0.00	10.87
		----------	Amount	Calc.	%Drift	----------		
66	P	4,6-Dinitro-2-methylpheno		----------NA----------				
		----------	Amount	Calc.	%Drift	----------		
67		Diphenylamine		----------NA----------				
68	P	n-Nitrosodiphenylamine		----------NA----------				
69		1,2-Diphenylhydrazine		----------NA----------				
70	S	2,4,6-Tribromophenol		----------NA----------				
71	P	4-Bromophenyl-phenylether		----------NA----------				
72	P	Hexachlorobenzene		----------NA----------				
73		Simazine		----------NA----------				
74	P	Atrazine		----------NA----------				
		----------	Amount	Calc.	%Drift	----------		
75	P	Pentachlorophenol		----------NA----------				
		----------	Amount	Calc.	%Drift	----------		
76	P	Phenanthrene		----------NA----------				
77	P	Anthracene		----------NA----------				
78	P	Carbazole		----------NA----------				
79	P	Di-n-butylphthalate		----------NA----------				
80	P	Fluoranthene		----------NA----------				
81	I	Chrysene-d12	40.000	40.000	0.0	0	0.00	15.79
82		Benzidine		----------NA----------				

Initial Calibration Verification

Job Number: F78009
Account: TETTNOAK Tetra Tech, Inc
Project: Holloman AFB; Alamogordo, NM

Sample: SL2516-ICV2516
Lab FileID: L049118.D

83	P	Pyrene		----------NA----------				
84	S	Terphenyl-d14		----------NA----------				
85	P	Butylbenzylphthalate		----------NA----------				
86	P	3,3'-Dichlorobenzidine		----------NA----------				
87	P	Benzo[a]anthracene		----------NA----------				
88	P	Chrysene		----------NA----------				
89	P	bis(2-Ethylhexyl)phthalat		----------NA----------				
90	I	Perylene-d12	40.000	40.000	0.0	0	0.00	18.29
		----------	Amount	Calc.	%Drift		----------	
91	P	Di-n-octylphthalate		----------NA----------				
		----------	Amount	Calc.	%Drift		----------	
92	P	Benzo[b]fluoranthene		----------NA----------				
93	P	Benzo[k]fluoranthene		----------NA----------				
94	P	Benzo[a]pyrene		----------NA----------				
95	P	Indeno[1,2,3-cd]pyrene		----------NA----------				
96	P	Dibenz[a,h]anthracene		----------NA----------				
97	P	Benzo[g,h,i]perylene		----------NA----------				
98	I	1,4-Dichlorobenzene-d4A	40.000	40.000	0.0	0	0.00	4.95
99		2-Picoline	50.000	51.400	-2.8	0	0.00	3.47
100		N-Nitrosomethylethylamine	50.000	50.404	-0.8	0	0.00	3.57
101		Methyl methanesulfonate	50.000	55.976	-12.0	0	0.00	3.81
102		N-Nitrosodiethylamine	50.000	55.873	-11.7	0	0.00	4.12
103		Ethyl methanesulfonate	50.000	51.611	-3.2	0	0.00	4.36
104		Pentachloroethane	50.000	53.437	-6.9	0	0.00	4.73
105		N-Nitrosopyrrolidine	50.000	57.097	-14.2	0	0.00	5.25
106		N-Nitrosomorpholine	50.000	53.054	-6.1	0	0.00	5.28
107		O-Toluidine	50.000	51.891	-3.8	0	0.00	5.30
108	I	Naphthalene-d8A	40.000	40.000	0.0	0	0.00	6.08
109		N-Nitrosopiperidine	50.000	56.459	-12.9	0	0.00	5.55
		----------	Amount	Calc.	%Drift		----------	
110		A,A-Dimethylphenethylamin	50.000	51.958	-3.9	0	-0.07	5.92
		----------	Amount	Calc.	%Drift		----------	
111		Hexachloropropene	50.000	58.370	-16.7	0	0.00	6.21
112		p-Phenylenediamine	50.000	57.453	-14.9	0	0.00	6.55
113		N-Nitrosodi-n-butylamine	50.000	46.857	6.3	0	0.00	6.54
114		Isosafrole	50.000	57.779	-15.6	0	0.00	6.79
115	I	Acenaphthene-d10A	40.000	40.000	0.0	0	0.00	8.36
116		Safrole	50.000	55.240	-10.5	0	0.00	7.47
117		1-Chloronaphthalene	50.000	49.632	0.7	0	0.00	7.58
118		Diphenyl Ether		----------NA----------				
119		1,4-Naphthoquinone	50.000	46.753	6.5	0	0.00	7.79
120		Pentachlorobenzene	50.000	52.760	-5.5	0	0.00	8.63
121		1-Naphthylamine	50.000	59.836	-19.7	0	0.00	8.81
122		2-Naphthylamine	50.000	58.899	-17.8	0	0.00	8.94
		----------	Amount	Calc.	%Drift		----------	
123		5-Nitro-o-toluidine	50.000	54.922	-9.8	0	0.00	9.29
		----------	Amount	Calc.	%Drift		----------	
124	I	Phenanthrene-d10A	40.000	40.000	0.0	0	0.00	10.87

Initial Calibration Verification

Job Number: F78009
Account: TETTNOAK Tetra Tech, Inc
Project: Holloman AFB; Alamogordo, NM

Sample: SL2516-ICV2516
Lab FileID: L049118.D

		Amount	Calc.	%Drift			
125	1,3,5-Trinitrobenzene	50.000	64.335	-28.7#	0	0.00	9.98
126	Diallate	50.000	55.550	-11.1	0	0.00	10.01
127	Phenacetin	50.000	58.466	-16.9	0	0.00	10.08
128	4-aminobiphenyl	50.000	55.753	-11.5	0	0.00	10.58
129	Pentachloronitrobenzene	50.000	58.102	-16.2	0	0.00	10.58
130	Pronamide	50.000	61.798	-23.6#	0	0.00	10.76
131	4-Nitroquinoline 1-Oxide	50.000	66.004	-32.0#	0	0.00	12.34
132	Methapyrilene	50.000	148.335	-196.7#	0	0.00	12.58
133	Isodrin	50.000	53.966	-7.9	0	0.00	12.81
134 I	Chrysene-d12A	40.000	40.000	0.0	0	0.00	15.79
135	Aramite	50.000	81.723	-63.4#	0	0.00	13.95
136	p-(Dimethylamine)azobenze	50.000	62.534	-25.1#	0	0.00	14.17
137	Chlorobenzilate	50.000	58.479	-17.0	0	0.00	14.31
138	Kepone	50.000	52.638	-5.3	0	0.00	14.79
139	3,3'-Dimethylbenzidine	50.000	70.990	-42.0#	0	0.00	14.82
140	2-Acetylaminofluorene	50.000	56.404	-12.8	0	0.00	15.28
141 I	Perylene-d12A	40.000	40.000	0.0	0	-0.01	18.29
142	7,12-Dimethylbenz(a)anthr	50.000	55.471	-10.9	0	0.00	17.69
143	Hexachlorophene			NA			
144	3-Methylcholanthrene	50.000	56.260	-12.5	0	0.00	18.79
145	Dibenz(a,j)acridine	50.000	55.228	-10.5	0	0.00	19.66

(#) = Out of Range SPCC's out = 0 CCC's out = 1
L048939.D app9D.m Mon Nov 29 05:45:02 2010

6.7.4

6

Continuing Calibration Summary

Job Number: F78009
Account: TETTNOAK Tetra Tech, Inc
Project: Holloman AFB; Alamogordo, NM

Sample: SL2518-CC2516
Lab FileID: L049146.D

Evaluate Continuing Calibration Report

```
Data File : C:\msdchem\2\DATA\113010\L049146.D          Vial: 3
Acq On    : 30 Nov 2010   7:24 am                   Operator: nancyf
Sample    : cc2516-75                               Inst    : MSBNA02
Misc      : op35130,sl2518,1000,,,1,1,water         Multiplr: 1.00
MS Integration Params: lscint.p

Method       : C:\msdchem\2\METHODS\app9D.m (RTE Integrator)
Title        : SW846 8270D OR EPA 625
Last Update  : Tue Nov 30 13:50:04 2010
Response via : Multiple Level Calibration

Min. RRF     :   0.000  Min. Rel. Area :  50%  Max. R.T. Dev  0.50min
Max. RRF Dev :  20%     Max. Rel. Area : 200%
```

		Compound	AvgRF	CCRF	%Dev	Area%	Dev(min)	R.T.
1	I	1,4-Dichlorobenzene-d4	1.000	1.000	0.0	179	0.00	4.95
2		1,4-Dioxane	0.560	0.583	-4.1	185	-0.02	2.49
3		N-nitrosodimethylamine	0.704	0.697	1.0	178	-0.02	2.78
4		Pyridine	1.454	1.425	2.0	176	-0.02	2.81
5	P	Benzaldehyde	1.112	1.135	-2.1	173	0.00	4.61
6		Aniline	1.954	1.677	14.2	158	0.00	4.70
7	S	2-Fluorophenol	1.228	1.119	8.9	164	0.00	3.96
8	P	bis(2-Chloroethyl)ether	1.294	1.256	2.9	174	0.00	4.74
9	S	Phenol-d5	1.542	1.353	12.3	159	0.00	4.68
10	P	Phenol	1.673	1.418	15.2	156	0.00	4.69
11	P	2-Chlorophenol	1.386	1.363	1.7	174	0.00	4.79
12		1,3-Dichlorobenzene	1.517	1.451	4.4	175	0.00	4.90
13	C	1,4-Dichlorobenzene	1.462	1.368	6.4	169	0.00	4.96
14		1,2-Dichlorobenzene	1.417	1.327	6.4	172	0.00	5.09
15		Benzyl alcohol	0.925	0.943	-1.9	177	0.00	5.06
16	P	bis(2-chloroisopropyl)eth	1.822	1.638	10.1	165	0.00	5.17
17	P	2-Methylphenol	1.242	1.177	5.2	170	0.00	5.16
18	P	Acetophenone	1.760	1.505	14.5	156	0.00	5.28
19	P	Hexachloroethane	0.522	0.523	-0.2	177	0.00	5.37
20	P	N-Nitroso-di-n-propylamin	0.870	0.771	11.4	157	0.00	5.28
21	P	3&4-Methylphenol	1.246	1.111	10.8	160	0.00	5.28
22	I	Naphthalene-d8	1.000	1.000	0.0	169	0.00	6.09
23	S	Nitrobenzene-d5	0.341	0.359	-5.3	176	0.00	5.41
24	P	Nitrobenzene	0.335	0.337	-0.6	169	0.00	5.43
25	P	Isophorone	0.651	0.662	-1.7	173	0.00	5.64
26	P	2-Nitrophenol	0.198	0.215	-8.6	178	0.00	5.71
27	P	2,4-Dimethylphenol	0.328	0.326	0.6	171	0.00	5.75
28	P	bis(2-Chloroethoxy)methan	0.382	0.377	1.3	170	0.00	5.83
		----------	Amount	Calc.	%Drift	----------		
29		Benzoic Acid	75.000	94.143	-25.5#	222	0.00	5.88
		----------	AvgRF	CCRF	%Dev	----------		
30	P	2,4-Dichlorophenol	0.304	0.305	-0.3	169	0.00	5.95
31		1,2,4-Trichlorobenzene	0.345	0.332	3.8	170	0.00	6.03
32	P	Naphthalene	0.930	0.796	14.4	158	0.00	6.11
33		alpha-terpineol	0.243	0.227	6.6	161	0.00	6.12
34	P	4-Chloroaniline	0.417	0.406	2.6	164	0.00	6.17
35		2,6-Dichlorophenol	0.288	0.282	2.1	168	0.00	6.18
36	P	Hexachlorobutadiene	0.160	0.161	-0.6	175	0.00	6.25
37	P	Caprolactam	0.123	0.133	-8.1	172	0.00	6.57

Continuing Calibration Summary

Job Number: F78009
Account: TETTNOAK Tetra Tech, Inc
Project: Holloman AFB; Alamogordo, NM

Sample: SL2518-CC2516
Lab FileID: L049146.D

38	P	4-Chloro-3-methylphenol	0.286	0.290	-1.4	170	0.00	6.73
39	P	2-Methylnaphthalene	0.642	0.618	3.7	168	0.00	6.90
40		1-Methylnaphthalene	0.640	0.613	4.2	167	0.00	7.03
41	P	1,2,4,5-Tetrachlorobenzen	0.297	0.268	9.8	159	0.00	7.13
42	I	Acenaphthene-d10	1.000	1.000	0.0	169	0.00	8.37
43	P	Hexachlorocyclopentadiene	0.302	0.326	-7.9	174	0.00	7.12
44	P	2,4,6-Trichlorophenol	0.402	0.401	0.2	170	0.00	7.28
45	P	2,4,5-Trichlorophenol	0.423	0.421	0.5	170	0.00	7.33
46	S	2-Fluorobiphenyl	1.301	1.231	5.4	166	0.00	7.39
47	P	1,1'-Biphenyl	1.697	1.612	5.0	164	0.00	7.52
48	P	2-Chloronaphthalene	1.163	1.072	7.8	162	0.00	7.55
49	P	2-Nitroaniline	0.324	0.349	-7.7	173	0.00	7.70
50		m-Dinitrobenzene	0.230	0.245	-6.5	173	0.00	8.02
51	P	Acenaphthylene	1.767	1.621	8.3	161	0.00	8.15
52	P	Dimethylphthalate	1.342	1.256	6.4	163	0.00	8.00
53	P	2,6-Dinitrotoluene	0.310	0.324	-4.5	173	0.00	8.07
54	P	Acenaphthene	1.093	1.027	6.0	166	0.00	8.42
55	P	3-Nitroaniline	0.371	0.387	-4.3	173	0.00	8.32
		----------	Amount	Calc.	%Drift	----------		
56	P	2,4-Dinitrophenol	75.000	83.015	-10.7	189	0.00	8.48
		----------	AvgRF	CCRF	%Dev	----------		
57	P	Dibenzofuran	1.546	1.381	10.7	160	0.00	8.69
58	P	2,4-Dinitrotoluene	0.361	0.351	2.8	164	0.00	8.70
59	P	4-Nitrophenol	0.172	0.193	-12.2	185	0.01	8.65
60	P	2,3,4,6-Tetrachlorophenol	0.321	0.326	-1.6	170	0.00	8.91
61	P	Fluorene	1.298	1.207	7.0	162	0.00	9.25
62	P	4-Chlorophenyl-phenylethe	0.622	0.565	9.2	162	0.00	9.28
63	P	Diethylphthalate	1.214	1.177	3.0	164	0.00	9.14
64	P	4-Nitroaniline	0.343	0.366	-6.7	173	0.00	9.33
65	I	Phenanthrene-d10	1.000	1.000	0.0	165	0.00	10.87
		----------	Amount	Calc.	%Drift	----------		
66	P	4,6-Dinitro-2-methylpheno	75.000	78.326	-4.4	173	0.00	9.38
		----------	AvgRF	CCRF	%Dev	----------		
67		Diphenylamine	0.638	0.613	3.9	163	0.00	9.49
68	P	n-Nitrosodiphenylamine	0.532	0.511	3.9	163	0.00	9.49
69		1,2-Diphenylhydrazine	0.669	0.661	1.2	165	0.00	9.55
70	S	2,4,6-Tribromophenol	0.094	0.092	2.1	168	0.00	9.66
71	P	4-Bromophenyl-phenylether	0.196	0.196	0.0	167	0.00	10.12
72	P	Hexachlorobenzene	0.209	0.201	3.8	165	0.00	10.20
73		Simazine	0.122	0.118	3.3	157	0.00	10.43
74	P	Atrazine	0.219	0.215	1.8	160	0.00	10.49
		----------	Amount	Calc.	%Drift	----------		
75	P	Pentachlorophenol	75.000	83.422	-11.2	185	0.00	10.57
		----------	AvgRF	CCRF	%Dev	----------		
76	P	Phenanthrene	1.046	0.956	8.6	158	0.00	10.91
77	P	Anthracene	1.044	0.977	6.4	158	0.00	11.00
78	P	Carbazole	1.001	0.936	6.5	158	0.00	11.33
79	P	Di-n-butylphthalate	1.015	1.008	0.7	161	0.00	12.11
80	P	Fluoranthene	1.085	0.999	7.9	153	0.00	13.09
81	I	Chrysene-d12	1.000	1.000	0.0	152	0.00	15.80
82		Benzidine	0.820	0.917	-11.8	156	0.00	13.43

Continuing Calibration Summary

Job Number: F78009 **Sample:** SL2518-CC2516
Account: TETTNOAK Tetra Tech, Inc **Lab FileID:** L049146.D
Project: Holloman AFB; Alamogordo, NM

83	P	Pyrene	1.347	1.343	0.3	155	-0.01	13.49
84	S	Terphenyl-d14	0.770	0.794	-3.1	156	-0.01	13.90
85	P	Butylbenzylphthalate	0.505	0.581	-15.0	165	0.00	14.92
86	P	3,3'-Dichlorobenzidine	0.387	0.432	-11.6	157	0.00	15.82
87	P	Benzo[a]anthracene	1.116	1.163	-4.2	157	0.00	15.78
88	P	Chrysene	1.079	1.076	0.3	155	0.00	15.85
89	P	bis(2-Ethylhexyl)phthalat	0.648	0.737	-13.7	161	0.00	16.10
90	I	Perylene-d12	1.000	1.000	0.0	169	0.00	18.30
		----------	Amount	Calc.	%Drift	----------		
91	P	Di-n-octylphthalate	75.000	73.991	1.3	163	0.00	17.28
		----------	AvgRF	CCRF	%Dev	----------		
92	P	Benzo[b]fluoranthene	1.093	1.056	3.4	160	0.00	17.69
93	P	Benzo[k]fluoranthene	1.057	1.025	3.0	164	0.00	17.74
94	P	Benzo[a]pyrene	1.046	1.047	-0.1	165	0.00	18.21
95	P	Indeno[1,2,3-cd]pyrene	1.032	1.109	-7.5	173	0.00	19.90
96	P	Dibenz[a,h]anthracene	1.037	1.074	-3.6	170	0.00	19.95
97	P	Benzo[g,h,i]perylene	1.176	1.188	-1.0	170	0.00	20.26
98	I	1,4-Dichlorobenzene-d4A	1.000	1.000	0.0	138	0.00	4.95
99		2-Picoline		----------NA----------				
100		N-Nitrosomethylethylamine		----------NA----------				
101		Methyl methanesulfonate		----------NA----------				
102		N-Nitrosodiethylamine		----------NA----------				
103		Ethyl methanesulfonate		----------NA----------				
104		Pentachloroethane		----------NA----------				
105		N-Nitrosopyrrolidine		----------NA----------				
106		N-Nitrosomorpholine		----------NA----------				
107		O-Toluidine		----------NA----------				
108	I	Naphthalene-d8A	1.000	1.000	0.0	137	0.00	6.09
109		N-Nitrosopiperidine		----------NA----------				
		----------	Amount	Calc.	%Drift	----------		
110		A,A-Dimethylphenethylamin		----------NA----------				
		----------	AvgRF	CCRF	%Dev	----------		
111		Hexachloropropene		----------NA----------				
112		p-Phenylenediamine		----------NA----------				
113		N-Nitrosodi-n-butylamine		----------NA----------				
114		Isosafrole		----------NA----------				
115	I	Acenaphthene-d10A	1.000	1.000	0.0	134	0.00	8.37
116		Safrole		----------NA----------				
117		1-Chloronaphthalene		----------NA----------				
118		Diphenyl Ether		----------NA----------				
119		1,4-Naphthoquinone		----------NA----------				
120		Pentachlorobenzene		----------NA----------				
121		1-Naphthylamine		----------NA----------				
122		2-Naphthylamine		----------NA----------				
		----------	Amount	Calc.	%Drift	----------		
123		5-Nitro-o-toluidine		----------NA----------				
		----------	AvgRF	CCRF	%Dev	----------		
124	I	Phenanthrene-d10A	1.000	1.000	0.0	137	0.00	10.87

Continuing Calibration Summary

Job Number: F78009
Account: TETTNOAK Tetra Tech, Inc
Project: Holloman AFB; Alamogordo, NM

Sample: SL2518-CC2516
Lab FileID: L049146.D

```
            ----------------------- Amount  Calc.    %Drift   -------------
125     1,3,5-Trinitrobenzene                ----------NA----------

            ----------------------- AvgRF   CCRF      %Dev   --------------
126     Diallate                             ----------NA----------
127     Phenacetin                           ----------NA----------
128     4-aminobiphenyl                      ----------NA----------
129     Pentachloronitrobenzene              ----------NA----------
130     Pronamide                            ----------NA----------

            ----------------------- Amount  Calc.    %Drift   -------------
131     4-Nitroquinoline 1-Oxide             ----------NA----------

            ----------------------- AvgRF   CCRF      %Dev   --------------
132     Methapyrilene                        ----------NA----------
133     Isodrin                              ----------NA----------

134 I   Chrysene-d12A               1.000   1.000      0.0  111   0.00   15.80

            ----------------------- Amount  Calc.    %Drift   -------------
135     Aramite                              ----------NA----------

            ----------------------- AvgRF   CCRF      %Dev   --------------
136     p-(Dimethylamine)azobenze            ----------NA----------
137     Chlorobenzilate                      ----------NA----------

            ----------------------- Amount  Calc.    %Drift   -------------
138     Kepone                               ----------NA----------

            ----------------------- AvgRF   CCRF      %Dev   --------------
139     3,3'-Dimethylbenzidine               ----------NA----------

            ----------------------- Amount  Calc.    %Drift   -------------
140     2-Acetylaminofluorene                ----------NA----------


            ----------------------- AvgRF   CCRF      %Dev   --------------
141 I   Perylene-d12A               1.000   1.000      0.0  139   0.00   18.30
142     7,12-Dimethylbenz(a)anthr            ----------NA----------

            ----------------------- Amount  Calc.    %Drift   -------------
143     Hexachlorophene                      ----------NA----------

            ----------------------- AvgRF   CCRF      %Dev   --------------
144     3-Methylcholanthrene                 ----------NA----------
145     Dibenz(a,j)acridine                  ----------NA----------
 ---------------------------------------------------------------------------
 ---------------------------------------------------------------------------

    (#) = Out of Range              SPCC's out = 0  CCC's out = 0
     L049111.D  app9D.m          Tue Nov 30 14:04:28 2010
```

6.7.5

6

Continuing Calibration Summary

Job Number: F78009
Account: TETTNOAK Tetra Tech, Inc
Project: Holloman AFB; Alamogordo, NM

Sample: SL2518-CC2516
Lab FileID: L049147.D

Evaluate Continuing Calibration Report

```
Data File : C:\msdchem\2\DATA\113010\L049147.D          Vial: 4
Acq On    : 30 Nov 2010   7:59 am                   Operator: nancyf
Sample    : cc2516-75 app                           Inst    : MSBNA02
Misc      : op35130,sl2518,1000,,,1,1,water         Multiplr: 1.00
MS Integration Params: lscint.p

Method       : C:\msdchem\2\METHODS\app9D.m (RTE Integrator)
Title        : SW846 8270D OR EPA 625
Last Update  : Tue Nov 30 13:50:04 2010
Response via : Multiple Level Calibration

Min. RRF     :   0.000  Min. Rel. Area :  50%  Max. R.T. Dev  0.50min
Max. RRF Dev :  20%     Max. Rel. Area : 200%

       Compound                    AvgRF   CCRF      %Dev Area%  Dev(min)R.T.
-----------------------------------------------------------------------------
1 I   1,4-Dichlorobenzene-d4      1.000   1.000      0.0  141   0.00    4.95
2     1,4-Dioxane                          ----------NA----------
3     N-nitrosodimethylamine               ----------NA----------
4     Pyridine                             ----------NA----------
5 P   Benzaldehyde                         ----------NA----------
6     Aniline                              ----------NA----------
7 S   2-Fluorophenol                       ----------NA----------
8  P  bis(2-Chloroethyl)ether              ----------NA----------
9 S   Phenol-d5                            ----------NA----------
10 P  Phenol                               ----------NA----------
11  P 2-Chlorophenol                       ----------NA----------
12    1,3-Dichlorobenzene                  ----------NA----------
13 C  1,4-Dichlorobenzene                  ----------NA----------
14    1,2-Dichlorobenzene                  ----------NA----------
15    Benzyl alcohol                       ----------NA----------
16  P bis(2-chloroisopropyl)eth            ----------NA----------
17  P 2-Methylphenol                       ----------NA----------
18 P  Acetophenone                         ----------NA----------
19  P Hexachloroethane                     ----------NA----------
20 P  N-Nitroso-di-n-propylamin            ----------NA----------
21 P  3&4-Methylphenol                     ----------NA----------

22 I  Naphthalene-d8              1.000   1.000      0.0  129   0.00    6.09
23 S  Nitrobenzene-d5                      ----------NA----------
24 P  Nitrobenzene                         ----------NA----------
25 P  Isophorone                           ----------NA----------
26 P  2-Nitrophenol                        ----------NA----------
27 P  2,4-Dimethylphenol                   ----------NA----------
28 P  bis(2-Chloroethoxy)methan            ----------NA----------

          ----------------------- Amount  Calc.    %Drift   -------------
29    Benzoic Acid                         ----------NA----------

          ----------------------- AvgRF   CCRF      %Dev   --------------
30 P  2,4-Dichlorophenol                   ----------NA----------
31    1,2,4-Trichlorobenzene               ----------NA----------
32 P  Naphthalene                          ----------NA----------
33    alpha-terpineol                      ----------NA----------
34 P  4-Chloroaniline                      ----------NA----------
35    2,6-Dichlorophenol                   ----------NA----------
36 P  Hexachlorobutadiene                  ----------NA----------
37 P  Caprolactam                          ----------NA----------
```

Continuing Calibration Summary

Job Number: F78009
Account: TETTNOAK Tetra Tech, Inc
Project: Holloman AFB; Alamogordo, NM

Sample: SL2518-CC2516
Lab FileID: L049147.D

38	P	4-Chloro-3-methylphenol		----------NA----------				
39	P	2-Methylnaphthalene		----------NA----------				
40		1-Methylnaphthalene		----------NA----------				
41	P	1,2,4,5-Tetrachlorobenzen		----------NA----------				
42	I	Acenaphthene-d10	1.000	1.000	0.0	127	0.00	8.36
43	P	Hexachlorocyclopentadiene		----------NA----------				
44	P	2,4,6-Trichlorophenol		----------NA----------				
45	P	2,4,5-Trichlorophenol		----------NA----------				
46	S	2-Fluorobiphenyl		----------NA----------				
47	P	1,1'-Biphenyl		----------NA----------				
48	P	2-Chloronaphthalene		----------NA----------				
49	P	2-Nitroaniline		----------NA----------				
50		m-Dinitrobenzene		----------NA----------				
51	P	Acenaphthylene		----------NA----------				
52	P	Dimethylphthalate		----------NA----------				
53	P	2,6-Dinitrotoluene		----------NA----------				
54	P	Acenaphthene		----------NA----------				
55	P	3-Nitroaniline		----------NA----------				
		----------	Amount	Calc.	%Drift	----------		
56	P	2,4-Dinitrophenol		----------NA----------				
		----------	AvgRF	CCRF	%Dev	----------		
57	P	Dibenzofuran		----------NA----------				
58	P	2,4-Dinitrotoluene		----------NA----------				
59	P	4-Nitrophenol		----------NA----------				
60	P	2,3,4,6-Tetrachlorophenol		----------NA----------				
61	P	Fluorene		----------NA----------				
62	P	4-Chlorophenyl-phenylethe		----------NA----------				
63	P	Diethylphthalate		----------NA----------				
64	P	4-Nitroaniline		----------NA----------				
65	I	Phenanthrene-d10	1.000	1.000	0.0	116	0.00	10.86
		----------	Amount	Calc.	%Drift	----------		
66	P	4,6-Dinitro-2-methylpheno		----------NA----------				
		----------	AvgRF	CCRF	%Dev	----------		
67		Diphenylamine		----------NA----------				
68	P	n-Nitrosodiphenylamine		----------NA----------				
69		1,2-Diphenylhydrazine		----------NA----------				
70	S	2,4,6-Tribromophenol		----------NA----------				
71	P	4-Bromophenyl-phenylether		----------NA----------				
72	P	Hexachlorobenzene		----------NA----------				
73		Simazine		----------NA----------				
74	P	Atrazine		----------NA----------				
		----------	Amount	Calc.	%Drift	----------		
75	P	Pentachlorophenol		----------NA----------				
		----------	AvgRF	CCRF	%Dev	----------		
76	P	Phenanthrene		----------NA----------				
77	P	Anthracene		----------NA----------				
78	P	Carbazole		----------NA----------				
79	P	Di-n-butylphthalate		----------NA----------				
80	P	Fluoranthene		----------NA----------				
81	I	Chrysene-d12	1.000	1.000	0.0	130	-0.01	15.78
82		Benzidine		----------NA----------				

Continuing Calibration Summary

Job Number: F78009 **Sample:** SL2518-CC2516
Account: TETTNOAK Tetra Tech, Inc **Lab FileID:** L049147.D
Project: Holloman AFB; Alamogordo, NM

83	P	Pyrene		----------NA----------				
84	S	Terphenyl-d14		----------NA----------				
85	P	Butylbenzylphthalate		----------NA----------				
86	P	3,3'-Dichlorobenzidine		----------NA----------				
87	P	Benzo[a]anthracene		----------NA----------				
88	P	Chrysene		----------NA----------				
89	P	bis(2-Ethylhexyl)phthalat		----------NA----------				
90	I	Perylene-d12	1.000	1.000	0.0	123	0.00	18.31
		----------	Amount	Calc.	%Drift		----------	
91	P	Di-n-octylphthalate		----------NA----------				
		----------	AvgRF	CCRF	%Dev		----------	
92	P	Benzo[b]fluoranthene		----------NA----------				
93	P	Benzo[k]fluoranthene		----------NA----------				
94	P	Benzo[a]pyrene		----------NA----------				
95	P	Indeno[1,2,3-cd]pyrene		----------NA----------				
96	P	Dibenz[a,h]anthracene		----------NA----------				
97	P	Benzo[g,h,i]perylene		----------NA----------				
98	I	1,4-Dichlorobenzene-d4A	1.000	1.000	0.0	109	0.00	4.95
99		2-Picoline	1.434	1.411	1.6	111	0.00	3.47
100		N-Nitrosomethylethylamine	0.714	0.693	2.9	107	0.00	3.57
101		Methyl methanesulfonate	0.687	0.643	6.4	104	0.00	3.82
102		N-Nitrosodiethylamine	0.641	0.657	-2.5	112	0.00	4.13
103		Ethyl methanesulfonate	0.978	0.934	4.5	108	0.00	4.36
104		Pentachloroethane	0.494	0.494	0.0	110	0.00	4.73
105		N-Nitrosopyrrolidine	0.707	0.727	-2.8	106	0.00	5.25
106		N-Nitrosomorpholine	0.744	0.693	6.9	104	0.00	5.29
107		O-Toluidine	1.956	1.796	8.2	106	0.00	5.31
108	I	Naphthalene-d8A	1.000	1.000	0.0	104	0.00	6.09
109		N-Nitrosopiperidine	0.240	0.239	0.4	104	0.00	5.55
		----------	Amount	Calc.	%Drift		----------	
110		A,A-Dimethylphenethylamin	75.000	69.987	6.7	98	0.00	5.98
		----------	AvgRF	CCRF	%Dev		----------	
111		Hexachloropropene	0.175	0.180	-2.9	106	0.00	6.21
112		p-Phenylenediamine	0.358	0.318	11.2	101	0.00	6.55
113		N-Nitrosodi-n-butylamine	0.261	0.257	1.5	103	0.00	6.54
114		Isosafrole	0.264	0.260	1.5	104	0.00	6.79
115	I	Acenaphthene-d10A	1.000	1.000	0.0	101	0.00	8.36
116		Safrole	0.517	0.517	0.0	102	0.00	7.48
117		1-Chloronaphthalene	1.096	1.022	6.8	102	0.00	7.58
118		Diphenyl Ether	0.782	0.748	4.3	102	0.00	7.67
119		1,4-Naphthoquinone	0.397	0.381	4.0	105	0.00	7.79
120		Pentachlorobenzene	0.458	0.441	3.7	103	0.00	8.64
121		1-Naphthylamine	1.084	1.058	2.4	100	0.00	8.81
122		2-Naphthylamine	1.144	1.094	4.4	99	0.00	8.95
		----------	Amount	Calc.	%Drift		----------	
123		5-Nitro-o-toluidine	75.000	74.538	0.6	98	0.00	9.29
		----------	AvgRF	CCRF	%Dev		----------	
124	I	Phenanthrene-d10A	1.000	1.000	0.0	97	0.00	10.86

Continuing Calibration Summary

Job Number: F78009
Account: TETTNOAK Tetra Tech, Inc
Project: Holloman AFB; Alamogordo, NM

Sample: SL2518-CC2516
Lab FileID: L049147.D

			Amount	Calc.	%Drift			
125	1,3,5-Trinitrobenzene		75.000	74.048	1.3	91	0.00	9.98
			AvgRF	CCRF	%Dev			
126	Diallate		0.267	0.270	-1.1	96	0.00	10.01
127	Phenacetin		0.332	0.352	-6.0	98	0.00	10.08
128	4-aminobiphenyl		0.695	0.676	2.7	96	0.00	10.58
129	Pentachloronitrobenzene		0.068	0.072	-5.9	99	0.00	10.59
130	Pronamide		0.267	0.293	-9.7	96	0.00	10.76
			Amount	Calc.	%Drift			
131	4-Nitroquinoline 1-Oxide		75.000	72.472	3.4	91	0.00	12.34
			AvgRF	CCRF	%Dev			
132	Methapyrilene		0.142	0.142	0.0	84	0.00	12.58
133	Isodrin		0.110	0.109	0.9	97	0.00	12.81
134	I	Chrysene-d12A	1.000	1.000	0.0	94	-0.01	15.78
			Amount	Calc.	%Drift			
135	Aramite		75.000	76.086	-1.4	95	-0.01	13.95
			AvgRF	CCRF	%Dev			
136	p-(Dimethylamine)azobenze		0.276	0.293	-6.2	96	-0.01	14.18
137	Chlorobenzilate		0.327	0.330	-0.9	94	-0.01	14.31
			Amount	Calc.	%Drift			
138	Kepone		75.000	80.338	-7.1	101	0.00	14.79
			AvgRF	CCRF	%Dev			
139	3,3'-Dimethylbenzidine		0.571	0.659	-15.4	105	-0.01	14.82
			Amount	Calc.	%Drift			
140	2-Acetylaminofluorene		75.000	81.411	-8.5	101	0.00	15.29
			AvgRF	CCRF	%Dev			
141	I	Perylene-d12A	1.000	1.000	0.0	102	0.00	18.31
142		7,12-Dimethylbenz(a)anthr	0.482	0.504	-4.6	101	0.00	17.70
			Amount	Calc.	%Drift			
143	Hexachlorophene		750.000	689.925	8.0	92	0.00	18.11
			AvgRF	CCRF	%Dev			
144	3-Methylcholanthrene		0.508	0.544	-7.1	103	0.01	18.80
145	Dibenz(a,j)acridine		0.847	0.938	-10.7	109	0.02	19.67

(#) = Out of Range SPCC's out = 63 CCC's out = 1
L049111.D app9D.m Tue Nov 30 14:04:31 2010

Initial Calibration Summary

Job Number: F78009
Account: TETTNOAK Tetra Tech, Inc
Project: Holloman AFB; Alamogordo, NM

Sample: SU1064-ICC1064
Lab FileID: U022256.D

Response Factor Report MSBNA04

Method : C:\msdchem\2\METHODS\8270d.m (RTE Integrator)
Title : SW846 8270D OR EPA 625
Last Update : Wed Nov 17 09:15:33 2010
Response via : Initial Calibration

Calibration Files
5 =U022253.D 25 =U022254.D 50 =U022255.D 75 =U022256.D
100 =U022257.D 125 =U022258.D icv =U022259.D

Compound	5	25	50	75	100	125	icv	Avg	%RSD
1) I 1,4-Dichlorobenzene-d	----------ISTD----------								
2) 1,4-Dioxane	0.557	0.488	0.500	0.521	0.502	0.536		0.517	4.98
3) N-nitrosodimethyl	0.823	0.781	0.791	0.816	0.802	0.856		0.812	3.29
4) Pyridine	1.405	1.347	1.459	1.536	1.335	1.447		1.421	5.30
5)P Benzaldehyde	1.295	1.215	1.198	1.157	1.115	0.961		1.157	9.82
6) Aniline	2.433	2.257	2.208	2.194	2.101	2.232		2.238	4.91
7)S 2-Fluorophenol	1.387	1.353	1.358	1.361	1.341	1.427		1.371	2.30
8)P bis(2-Chloroethyl	1.440	1.449	1.437	1.447	1.452	1.515		1.457	2.01
9)S Phenol-d5	1.868	1.778	1.745	1.744	1.675	1.784		1.766	3.59
10)P Phenol	2.208	2.035	1.979	1.990	1.934	2.064		2.035	4.72
11)P 2-Chlorophenol	1.581	1.493	1.535	1.562	1.542	1.638		1.559	3.13
12) 1,3-Dichlorobenze	1.666	1.540	1.552	1.568	1.540	1.629		1.582	3.33
13) 1,4-Dichlorobenze	1.666	1.605	1.583	1.584	1.566	1.653		1.609	2.54
14) 1,2-Dichlorobenze	1.607	1.503	1.505	1.526	1.495	1.554		1.532	2.78
15) Benzyl alcohol	1.015	1.014	1.040	1.067	1.066	1.124		1.054	3.91
16)P bis(2-chloroisopr	2.789	2.616	2.542	2.492	2.398	2.499		2.556	5.26
17)P 2-Methylphenol	1.430	1.376	1.375	1.396	1.386	1.442		1.401	2.03
18)P Acetophenone	2.197	2.133	2.143	2.138	2.113	2.286		2.168	2.95
19)P Hexachloroethane	0.627	0.592	0.610	0.616	0.611	0.646		0.617	2.95
20)P N-Nitroso-di-n-pr	1.106	1.102	1.079	1.084	1.097	1.135		1.100	1.82
21)P 3&4-Methylphenol	1.487	1.438	1.455	1.479	1.446	1.559		1.477	2.99
22) I Naphthalene-d8	----------ISTD----------								
23)S Nitrobenzene-d5	0.427	0.377	0.366	0.351	0.328	0.321		0.362	10.61
24)P Nitrobenzene	0.417	0.383	0.369	0.348	0.324	0.317		0.360	10.51
25)P Isophorone	0.755	0.701	0.668	0.643	0.599	0.596		0.660	9.33
26)P 2-Nitrophenol	0.199	0.191	0.186	0.183	0.171	0.168		0.183	6.61
27)P 2,4-Dimethylpheno	0.389	0.357	0.340	0.326	0.306	0.299		0.336	9.98
28)P bis(2-Chloroethox	0.460	0.406	0.387	0.368	0.345	0.334		0.383	11.95
29) Benzoic Acid	0.206	0.277	0.292	0.290	0.282	0.284		0.272	12.05
30)P 2,4-Dichloropheno	0.312	0.283	0.275	0.262	0.244	0.242		0.270	9.75
31) 1,2,4-Trichlorobe	0.344	0.307	0.291	0.277	0.256	0.250		0.288	12.18
32)P Naphthalene	1.165	1.022	0.958	0.909	0.832	0.816		0.950	13.72
33) alpha-Terpineol	0.364	0.341	0.323	0.305	0.281	0.276		0.315	10.99
34)P 4-Chloroaniline	0.491	0.449	0.428	0.404	0.374	0.370		0.419	11.09
35) 2,6-Dichloropheno	0.310	0.288	0.271	0.257	0.239	0.234		0.266	11.02
36)P Hexachlorobutadie	0.159	0.144	0.139	0.130	0.121	0.119		0.135	11.14
37)P Caprolactam	0.126	0.123	0.122	0.114	0.110	0.113		0.118	5.57
38)P 4-Chloro-3-methyl	0.308	0.301	0.297	0.287	0.267	0.269		0.288	5.89
39)P 2-Methylnaphthale	0.699	0.646	0.619	0.589	0.555	0.545		0.609	9.58
40) 1-Methylnaphthale	0.688	0.626	0.600	0.573	0.531	0.526		0.591	10.37
41)P 1,2,4,5-Tetrachlo	0.301	0.273	0.266	0.252	0.234	0.234		0.260	9.83
42) I Acenaphthene-d10	----------ISTD----------								
43)P Hexachlorocyclope	0.219	0.268	0.292	0.312	0.309	0.319		0.286	13.25
44)P 2,4,6-Trichloroph	0.406	0.401	0.397	0.409	0.404	0.417		0.406	1.71

Initial Calibration Summary

Job Number: F78009 **Sample:** SU1064-ICC1064
Account: TETTNOAK Tetra Tech, Inc **Lab FileID:** U022256.D
Project: Holloman AFB; Alamogordo, NM

```
45)P 2,4,5-Trichloroph 0.437 0.432 0.438 0.438 0.431 0.446       0.437   1.26
46)S 2-Fluorobiphenyl  1.447 1.406 1.366 1.389 1.346 1.375       1.388   2.55
47)P 1,1'-Biphenyl     1.657 1.617 1.565 1.556 1.485 1.534       1.569   3.87
48)P 2-Chloronaphthale 1.323 1.278 1.226 1.262 1.204 1.222       1.253   3.51
49)P 2-Nitroaniline    0.415 0.419 0.435 0.445 0.441 0.459       0.436   3.78
50)P Acenaphthylene    1.994 1.982 1.959 1.987 1.933 2.008       1.977   1.36
51)P Dimethylphthalate 1.479 1.449 1.450 1.480 1.469 1.535       1.477   2.13
52)  m-Dinitrobenzene  0.213 0.243 0.255 0.261 0.267 0.281       0.254   9.22
53)P 2,6-Dinitrotoluen 0.312 0.332 0.338 0.350 0.349 0.367       0.341   5.41
54)P Acenaphthene      1.293 1.202 1.209 1.228 1.190 1.233       1.226   3.01
55)P 3-Nitroaniline    0.391 0.393 0.404 0.413 0.416 0.444       0.410   4.77
56)P 2,4-Dinitrophenol 0.074 0.142 0.175 0.201 0.221 0.244       0.176  34.87
             ---- Quadratic regr., Force(0,0) ----  Coefficient =  0.9998
               Response Ratio = 0.00000 + 0.12918 *A + 0.03676 *A^2

57)P Dibenzofuran      1.814 1.721 1.704 1.716 1.700 1.770       1.738   2.59
58)P 2,4-Dinitrotoluen 0.395 0.439 0.455 0.469 0.484 0.519       0.460   9.13
59)P 4-Nitrophenol     0.200 0.225 0.228 0.240 0.245 0.264       0.234   9.16
60)P 2,3,4,6-Tetrachlo 0.324 0.314 0.327 0.331 0.335 0.351       0.330   3.74
61)P Fluorene          1.431 1.404 1.402 1.415 1.412 1.478       1.424   2.02
62)P 4-Chlorophenyl-ph 0.640 0.623 0.615 0.629 0.611 0.639       0.626   1.93
63)P Diethylphthalate  1.347 1.386 1.418 1.432 1.437 1.521       1.423   4.09
64)P 4-Nitroaniline    0.383 0.409 0.419 0.434 0.447 0.481       0.429   7.91

65) I   Phenanthrene-d10      ----------------ISTD---------------------
66)P 4,6-Dinitro-2-met 0.078 0.133 0.148 0.163 0.164 0.172       0.143  24.37
             ---- Quadratic regr., Force(0,0) ----  Coefficient =  0.9992
               Response Ratio = 0.00000 + 0.13507 *A + 0.01196 *A^2

67)P n-Nitrosodiphenyl 0.618 0.601 0.598 0.597 0.551 0.567       0.589   4.19
68)  1,2-Diphenylhydra 0.879 0.937 0.939 0.933 0.866 0.891       0.907   3.62
69)S 2,4,6-Tribromophe 0.094 0.092 0.092 0.094 0.092 0.095       0.093   1.42
70)P 4-Bromophenyl-phe 0.192 0.192 0.194 0.197 0.183 0.193       0.192   2.39
71)P Hexachlorobenzene 0.193 0.187 0.188 0.188 0.182 0.188       0.188   1.99
72)  Simazine          0.110 0.115 0.117 0.118 0.115 0.121       0.116   3.02
73)P Atrazine          0.222 0.221 0.225 0.219 0.211 0.224       0.220   2.26
74)P Pentachlorophenol 0.106 0.129 0.136 0.140 0.141 0.148       0.133  11.10
75)P Phenanthrene      1.198 1.140 1.132 1.142 1.095 1.141       1.141   2.89
76)P Anthracene        1.170 1.145 1.155 1.154 1.118 1.177       1.153   1.79
77)P Carbazole         1.174 1.170 1.164 1.176 1.158 1.215       1.176   1.70
78)P Di-n-butylphthala 1.186 1.312 1.327 1.359 1.328 1.399       1.319   5.45
79)P Fluoranthene      1.095 1.168 1.161 1.199 1.208 1.279       1.185   5.14

80) I   Chrysene-d12          ----------------ISTD---------------------
81)  Benzidine         0.665 0.780 0.815 0.828 0.840 0.830       0.793   8.31
82)P Pyrene            1.302 1.245 1.288 1.271 1.259 1.277       1.274   1.60
83)S Terphenyl-d14     0.692 0.681 0.705 0.691 0.692 0.705       0.694   1.37
84)P Butylbenzylphthal 0.516 0.575 0.595 0.595 0.601 0.618       0.583   6.15
85)P 3,3'-Dichlorobenz 0.396 0.418 0.444 0.445 0.441 0.449       0.432   4.82
86)P Benzo[a]anthracen 1.064 1.075 1.112 1.121 1.115 1.161       1.108   3.18
87)P Chrysene          1.099 1.099 1.092 1.108 1.082 1.105       1.097   0.86
88)P bis(2-Ethylhexyl) 0.628 0.768 0.794 0.814 0.817 0.830       0.775   9.72

89) I   Perylene-d12          ----------------ISTD---------------------
90)P Di-n-octylphthala 0.816 1.184 1.243 1.365 1.470 1.526       1.267  20.23
             ---- Quadratic regr., Force(0,0) ----  Coefficient =  0.9996
               Response Ratio = 0.00000 + 1.09762 *A + 0.14022 *A^2

91)P Benzo[b]fluoranth 0.944 0.993 1.010 1.137 1.122 1.169       1.063   8.62
92)P Benzo[k]fluoranth 1.218 1.198 1.219 1.174 1.165 1.237       1.202   2.34
```

Initial Calibration Summary

Job Number: F78009
Account: TETTNOAK Tetra Tech, Inc
Project: Holloman AFB; Alamogordo, NM

Sample: SU1064-ICC1064
Lab FileID: U022256.D

```
93)P Benzo[a]pyrene    0.926 1.045 1.080 1.140 1.112 1.173       1.079   8.10
94)P Indeno[1,2,3-cd]p 0.565 0.752 0.853 0.883 0.830 0.933       0.803  16.33
            ---- Quadratic regr., Force(0,0) ----  Coefficient =  0.9951
              Response Ratio = 0.00000 + 0.75326 *A + 0.05188 *A^2

95)P Dibenz[a,h]anthra 0.706 0.898 0.941 0.953 0.897 0.952       0.891  10.59
96)P Benzo[g,h,i]peryl 0.973 1.057 1.088 1.053 0.976 1.032       1.030   4.52
---------------------------------------------------------------------------
(#) = Out of Range

          8270d.m           Wed Nov 17 09:26:53 2010
```

6.7.7

6

Initial Calibration Verification

Job Number: F78009
Account: TETTNOAK Tetra Tech, Inc
Project: Holloman AFB; Alamogordo, NM

Sample: SU1064-ICV1064
Lab FileID: U022259.D

Evaluate Continuing Calibration Report

Data File : C:\msdchem\2\DATA\111610\U022259.D Vial: 8
Acq On : 16 Nov 2010 4:21 pm Operator: nancyf
Sample : icv1064-50 Inst : MSBNA04
Misc : op35016,su1064,1000,,,1,1,water Multiplr: 1.00
MS Integration Params: RTEINT.P

Method : C:\msdchem\2\METHODS\8270d.m (RTE Integrator)
Title : SW846 8270D OR EPA 625
Last Update : Wed Nov 17 09:15:33 2010
Response via : Multiple Level Calibration

Min. RRF : 0.000 Min. Rel. Area : 50% Max. R.T. Dev 0.50min
Max. RRF Dev : 20% Max. Rel. Area : 200%

		Compound	Amount	Calc.	%Drift	Area%	Dev(min)	R.T.
1	I	1,4-Dichlorobenzene-d4	40.000	40.000	0.0	92	0.00	4.81
2		1,4-Dioxane	50.000	45.590	8.8	0	0.00	2.39
3		N-nitrosodimethylamine	50.000	45.462	9.1	0	0.00	2.74
4		Pyridine	50.000	45.722	8.6	0	0.00	2.73
5	P	Benzaldehyde	50.000	49.413	1.2	0	0.00	4.50
6		Aniline	50.000	50.613	-1.2	0	0.00	4.60
7	S	2-Fluorophenol		----------NA----------				
8	P	bis(2-Chloroethyl)ether	50.000	47.540	4.9	0	0.00	4.64
9	S	Phenol-d5		----------NA----------				
10	P	Phenol	50.000	50.354	-0.7	0	0.00	4.60
11	P	2-Chlorophenol	50.000	48.659	2.7	0	0.00	4.69
12		1,3-Dichlorobenzene	50.000	47.994	4.0	0	0.00	4.78
13		1,4-Dichlorobenzene	50.000	47.644	4.7	0	0.00	4.83
14		1,2-Dichlorobenzene	50.000	48.054	3.9	0	0.00	4.98
15		Benzyl alcohol	50.000	53.529	-7.1	0	0.00	4.95
16	P	bis(2-chloroisopropyl)eth	50.000	48.762	2.5	0	0.00	5.06
17	P	2-Methylphenol	50.000	49.039	1.9	0	0.00	5.05
18	P	Acetophenone	50.000	47.177	5.6	0	0.00	5.15
19	P	Hexachloroethane	50.000	48.864	2.3	0	0.00	5.22
20	P	N-Nitroso-di-n-propylamin	50.000	46.360	7.3	0	0.00	5.17
21	P	3&4-Methylphenol	100.000	96.435	3.6	0	0.00	5.17
22	I	Naphthalene-d8	40.000	40.000	0.0	87	0.00	5.93
23	S	Nitrobenzene-d5		----------NA----------				
24	P	Nitrobenzene	50.000	49.127	1.7	0	0.00	5.30
25	P	Isophorone	50.000	40.516	19.0	0	0.00	5.50
26	P	2-Nitrophenol	50.000	51.063	-2.1	0	0.00	5.59
27	P	2,4-Dimethylphenol	50.000	44.035	11.9	0	0.00	5.62
28	P	bis(2-Chloroethoxy)methan	50.000	48.661	2.7	0	0.00	5.70
29		Benzoic Acid	100.000	110.920	-10.9	0	0.00	5.74
30	P	2,4-Dichlorophenol	50.000	51.886	-3.8	0	0.00	5.81
31		1,2,4-Trichlorobenzene	50.000	45.718	8.6	0	0.00	5.89
32	P	Naphthalene	50.000	49.465	1.1	0	0.00	5.95
33		alpha-Terpineol	50.000	50.635	-1.3	0	0.00	5.93
34	P	4-Chloroaniline	50.000	45.627	8.7	0	0.00	6.04
35		2,6-Dichlorophenol	50.000	49.571	0.9	0	0.00	6.04
36	P	Hexachlorobutadiene	50.000	50.983	-2.0	0	0.00	6.13
37	P	Caprolactam	50.000	48.691	2.6	0	0.00	6.38
38	P	4-Chloro-3-methylphenol	50.000	51.812	-3.6	0	0.00	6.58
39	P	2-Methylnaphthalene	50.000	54.762	-9.5	0	0.00	6.72
40		1-Methylnaphthalene	50.000	49.043	1.9	0	0.00	6.85
41	P	1,2,4,5-Tetrachlorobenzen	50.000	48.483	3.0	0	0.00	6.98

Initial Calibration Verification

Job Number: F78009
Account: TETTNOAK Tetra Tech, Inc
Project: Holloman AFB; Alamogordo, NM

Sample: SU1064-ICV1064
Lab FileID: U022259.D

42	I	Acenaphthene-d10	40.000	40.000	0.0	92	0.00	8.18
43	P	Hexachlorocyclopentadiene	50.000	51.372	-2.7	0	0.00	7.00
44	P	2,4,6-Trichlorophenol	50.000	49.203	1.6	0	0.00	7.12
45	P	2,4,5-Trichlorophenol	50.000	49.854	0.3	0	0.00	7.18
46	S	2-Fluorobiphenyl		----------NA----------				
47	P	1,1'-Biphenyl	50.000	46.944	6.1	0	0.00	7.34
48	P	2-Chloronaphthalene	50.000	47.537	4.9	0	0.00	7.35
49	P	2-Nitroaniline	50.000	56.125	-12.3	0	0.00	7.56
50	P	Acenaphthylene	50.000	48.159	3.7	0	0.00	7.95
51	P	Dimethylphthalate	50.000	47.827	4.3	0	0.00	7.87
52		m-Dinitrobenzene	50.000	53.166	-6.3	0	0.00	7.89
53	P	2,6-Dinitrotoluene	50.000	47.944	4.1	0	0.00	7.97
54	P	Acenaphthene	50.000	48.273	3.5	0	0.00	8.23
55	P	3-Nitroaniline	50.000	41.431	17.1	0	0.00	8.18
		----------	Amount	Calc.	%Drift		----------	
56	P	2,4-Dinitrophenol	100.000	91.887	8.1	0	0.00	8.33
		----------	Amount	Calc.	%Drift		----------	
57	P	Dibenzofuran	50.000	51.794	-3.6	0	0.00	8.48
58	P	2,4-Dinitrotoluene	50.000	48.352	3.3	0	0.00	8.58
59	P	4-Nitrophenol	100.000	98.892	1.1	0	0.00	8.50
60	P	2,3,4,6-Tetrachlorophenol	50.000	47.331	5.3	0	0.00	8.76
61	P	Fluorene	50.000	49.375	1.3	0	0.00	9.03
62	P	4-Chlorophenyl-phenylethe	50.000	48.405	3.2	0	0.00	9.05
63	P	Diethylphthalate	50.000	48.455	3.1	0	0.00	8.99
64	P	4-Nitroaniline	50.000	51.877	-3.8	0	0.00	9.18
65	I	Phenanthrene-d10	40.000	40.000	0.0	90	0.00	10.62
		----------	Amount	Calc.	%Drift		----------	
66	P	4,6-Dinitro-2-methylpheno	100.000	102.477	-2.5	0	0.00	9.23
		----------	Amount	Calc.	%Drift		----------	
67	P	n-Nitrosodiphenylamine	50.000	49.806	0.4	0	0.00	9.28
68		1,2-Diphenylhydrazine	50.000	45.337	9.3	0	0.00	9.31
69	S	2,4,6-Tribromophenol		----------NA----------				
70	P	4-Bromophenyl-phenylether	50.000	49.431	1.1	0	0.00	9.87
71	P	Hexachlorobenzene	50.000	47.747	4.5	0	0.00	10.10
72		Simazine	50.000	74.147	-48.3#	0	0.00	10.23
73	P	Atrazine	50.000	49.531	0.9	0	0.00	10.30
74	P	Pentachlorophenol	100.000	108.032	-8.0	0	0.00	10.44
75	P	Phenanthrene	50.000	49.686	0.6	0	0.00	10.66
76	P	Anthracene	50.000	50.021	-0.0	0	0.00	10.73
77	P	Carbazole	50.000	54.594	-9.2	0	0.00	11.08
78	P	Di-n-butylphthalate	50.000	48.742	2.5	0	0.00	11.90
79	P	Fluoranthene	50.000	49.197	1.6	0	0.00	12.82
80	I	Chrysene-d12	40.000	40.000	0.0	84	0.00	15.52
81		Benzidine	50.000	65.105	-30.2#	0	0.00	13.18
82	P	Pyrene	50.000	50.659	-1.3	0	-0.01	13.22
83	S	Terphenyl-d14		----------NA----------				
84	P	Butylbenzylphthalate	50.000	50.507	-1.0	0	0.00	14.69
85	P	3,3'-Dichlorobenzidine	50.000	64.919	-29.8#	0	0.00	15.57
86	P	Benzo[a]anthracene	50.000	49.721	0.6	0	0.00	15.49
87	P	Chrysene	50.000	50.319	-0.6	0	0.00	15.57
88	P	bis(2-Ethylhexyl)phthalat	50.000	51.401	-2.8	0	0.00	15.86
89	I	Perylene-d12	40.000	40.000	0.0	79	0.00	18.02

Initial Calibration Verification

Job Number: F78009
Account: TETTNOAK Tetra Tech, Inc
Project: Holloman AFB; Alamogordo, NM

Sample: SU1064-ICV1064
Lab FileID: U022259.D

			Amount	Calc.	%Drift			
90	P	Di-n-octylphthalate	50.000	53.506	-7.0	0	0.00	16.96
91	P	Benzo[b]fluoranthene	50.000	49.280	1.4	0	0.00	17.41
92	P	Benzo[k]fluoranthene	50.000	51.579	-3.2	0	-0.01	17.45
93	P	Benzo[a]pyrene	50.000	49.029	1.9	0	0.00	17.93
94	P	Indeno[1,2,3-cd]pyrene	50.000	51.399	-2.8	0	0.00	19.61
95	P	Dibenz[a,h]anthracene	50.000	52.428	-4.9	0	0.00	19.65
96	P	Benzo[g,h,i]perylene	50.000	51.725	-3.5	0	0.00	19.96

(#) = Out of Range SPCC's out = 0 CCC's out = 0
U022259.D 8270d.m Wed Nov 17 09:26:01 2010

6.7.8

6

Initial Calibration Verification

Job Number: F78009
Account: TETTNOAK Tetra Tech, Inc
Project: Holloman AFB; Alamogordo, NM

Sample: SU1064-ICV1064
Lab FileID: U022260.D

Evaluate Continuing Calibration Report

```
Data File : C:\msdchem\2\DATA\111610\U022260.D          Vial: 9
Acq On    : 16 Nov 2010   4:50 pm                   Operator: nancyf
Sample    : icv1064-50                              Inst    : MSBNA04
Misc      : op35016,su1064,1000,,,1,1,water         Multiplr: 1.00
MS Integration Params: RTEINT.P

Method       : C:\msdchem\2\METHODS\8270d.m (RTE Integrator)
Title        : SW846 8270D OR EPA 625
Last Update  : Wed Nov 17 09:15:33 2010
Response via : Multiple Level Calibration

Min. RRF     :   0.000  Min. Rel. Area :  50%  Max. R.T. Dev  0.50min
Max. RRF Dev :  20%     Max. Rel. Area : 200%
```

		Compound	Amount	Calc.	%Drift	Area%	Dev(min)	R.T.
1	I	1,4-Dichlorobenzene-d4	40.000	40.000	0.0	99	0.00	4.81
2		1,4-Dioxane		----------NA----------				
3		N-nitrosodimethylamine		----------NA----------				
4		Pyridine	50.000	45.703	8.6	0	0.00	2.73
5	P	Benzaldehyde		----------NA----------				
6		Aniline	50.000	55.480	-11.0	0	0.00	4.60
7	S	2-Fluorophenol		----------NA----------				
8	P	bis(2-Chloroethyl)ether		----------NA----------				
9	S	Phenol-d5		----------NA----------				
10	P	Phenol		----------NA----------				
11	P	2-Chlorophenol		----------NA----------				
12		1,3-Dichlorobenzene		----------NA----------				
13		1,4-Dichlorobenzene		----------NA----------				
14		1,2-Dichlorobenzene		----------NA----------				
15		Benzyl alcohol	50.000	50.293	-0.6	0	0.00	4.95
16	P	bis(2-chloroisopropyl)eth		----------NA----------				
17	P	2-Methylphenol		----------NA----------				
18	P	Acetophenone		----------NA----------				
19	P	Hexachloroethane		----------NA----------				
20	P	N-Nitroso-di-n-propylamin		----------NA----------				
21	P	3&4-Methylphenol		----------NA----------				
22	I	Naphthalene-d8	40.000	40.000	0.0	82	0.00	5.93
23	S	Nitrobenzene-d5		----------NA----------				
24	P	Nitrobenzene		----------NA----------				
25	P	Isophorone		----------NA----------				
26	P	2-Nitrophenol		----------NA----------				
27	P	2,4-Dimethylphenol		----------NA----------				
28	P	bis(2-Chloroethoxy)methan		----------NA----------				
29		Benzoic Acid		----------NA----------				
30	P	2,4-Dichlorophenol		----------NA----------				
31		1,2,4-Trichlorobenzene		----------NA----------				
32	P	Naphthalene		----------NA----------				
33		alpha-Terpineol		----------NA----------				
34	P	4-Chloroaniline	50.000	62.535	-25.1#	0	0.00	6.04
35		2,6-Dichlorophenol		----------NA----------				
36	P	Hexachlorobutadiene		----------NA----------				
37	P	Caprolactam		----------NA----------				
38	P	4-Chloro-3-methylphenol		----------NA----------				
39	P	2-Methylnaphthalene	50.000	59.971	-19.9	0	0.00	6.72
40		1-Methylnaphthalene		----------NA----------				
41	P	1,2,4,5-Tetrachlorobenzen		----------NA----------				

Initial Calibration Verification

Job Number: F78009
Account: TETTNOAK Tetra Tech, Inc
Project: Holloman AFB; Alamogordo, NM

Sample: SU1064-ICV1064
Lab FileID: U022260.D

42	I	Acenaphthene-d10	40.000	40.000	0.0	96	0.00	8.18
43	P	Hexachlorocyclopentadiene		----------NA----------				
44	P	2,4,6-Trichlorophenol		----------NA----------				
45	P	2,4,5-Trichlorophenol		----------NA----------				
46	S	2-Fluorobiphenyl		----------NA----------				
47	P	1,1'-Biphenyl		----------NA----------				
48	P	2-Chloronaphthalene		----------NA----------				
49	P	2-Nitroaniline	50.000	54.629	-9.3	0	0.00	7.56
50	P	Acenaphthylene		----------NA----------				
51	P	Dimethylphthalate		----------NA----------				
52		m-Dinitrobenzene	50.000	52.360	-4.7	0	0.00	7.89
53	P	2,6-Dinitrotoluene		----------NA----------				
54	P	Acenaphthene		----------NA----------				
55	P	3-Nitroaniline	50.000	55.616	-11.2	0	0.00	8.18
		----------	Amount	Calc.	%Drift	----------		
56	P	2,4-Dinitrophenol		----------NA----------				
		----------	Amount	Calc.	%Drift	----------		
57	P	Dibenzofuran	50.000	52.290	-4.6	0	0.00	8.48
58	P	2,4-Dinitrotoluene		----------NA----------				
59	P	4-Nitrophenol		----------NA----------				
60	P	2,3,4,6-Tetrachlorophenol		----------NA----------				
61	P	Fluorene		----------NA----------				
62	P	4-Chlorophenyl-phenylethe		----------NA----------				
63	P	Diethylphthalate		----------NA----------				
64	P	4-Nitroaniline	50.000	54.015	-8.0	0	-0.01	9.17
65	I	Phenanthrene-d10	40.000	40.000	0.0	92	0.00	10.61
		----------	Amount	Calc.	%Drift	----------		
66	P	4,6-Dinitro-2-methylpheno		----------NA----------				
		----------	Amount	Calc.	%Drift	----------		
67	P	n-Nitrosodiphenylamine		----------NA----------				
68		1,2-Diphenylhydrazine		----------NA----------				
69	S	2,4,6-Tribromophenol		----------NA----------				
70	P	4-Bromophenyl-phenylether		----------NA----------				
71	P	Hexachlorobenzene		----------NA----------				
72		Simazine		----------NA----------				
73	P	Atrazine		----------NA----------				
74	P	Pentachlorophenol		----------NA----------				
75	P	Phenanthrene		----------NA----------				
76	P	Anthracene		----------NA----------				
77	P	Carbazole	50.000	53.754	-7.5	0	0.00	11.08
78	P	Di-n-butylphthalate		----------NA----------				
79	P	Fluoranthene		----------NA----------				
80	I	Chrysene-d12	40.000	40.000	0.0	86	0.00	15.51
81		Benzidine	50.000	58.834	-17.7	0	0.00	13.18
82	P	Pyrene		----------NA----------				
83	S	Terphenyl-d14		----------NA----------				
84	P	Butylbenzylphthalate		----------NA----------				
85	P	3,3'-Dichlorobenzidine	50.000	51.518	-3.0	0	0.00	15.57
86	P	Benzo[a]anthracene		----------NA----------				
87	P	Chrysene		----------NA----------				
88	P	bis(2-Ethylhexyl)phthalat		----------NA----------				
89	I	Perylene-d12	40.000	40.000	0.0	85	0.00	18.02

Initial Calibration Verification

Job Number: F78009
Account: TETTNOAK Tetra Tech, Inc
Project: Holloman AFB; Alamogordo, NM

Sample: SU1064-ICV1064
Lab FileID: U022260.D

```
            ----------------------- Amount  Calc.    %Drift   -------------
90 P   Di-n-octylphthalate                 ----------NA----------

            ----------------------- Amount  Calc.    %Drift   -------------
91 P   Benzo[b]fluoranthene                ----------NA----------
92 P   Benzo[k]fluoranthene                ----------NA----------
93 P   Benzo[a]pyrene                      ----------NA----------

            ----------------------- Amount  Calc.    %Drift   -------------
94 P   Indeno[1,2,3-cd]pyrene              ----------NA----------

            ----------------------- Amount  Calc.    %Drift   -------------
95 P   Dibenz[a,h]anthracene               ----------NA----------
96 P   Benzo[g,h,i]perylene                ----------NA----------
---------------------------------------------------------------------------
---------------------------------------------------------------------------

   (#) = Out of Range                SPCC's out = 0  CCC's out = 0
    U022259.D  8270d.m          Wed Nov 17 09:26:02 2010
```

6.7.9

6

Continuing Calibration Summary

Job Number: F78009
Account: TETTNOAK Tetra Tech, Inc
Project: Holloman AFB; Alamogordo, NM

Sample: SU1077-CC1064
Lab FileID: U022581.D

Evaluate Continuing Calibration Report

Data File : C:\msdchem\2\DATA\112910\U022581.D Vial: 2
Acq On : 29 Nov 2010 9:02 am Operator: nancyf
Sample : cc1064-50 Inst : MSBNA04
Misc : op35095,su1077,1000,,,1,1,water Multiplr: 1.00
MS Integration Params: RTEINT.P

Method : C:\msdchem\2\METHODS\8270d.m (RTE Integrator)
Title : SW846 8270D OR EPA 625
Last Update : Tue Nov 30 08:53:10 2010
Response via : Multiple Level Calibration

Min. RRF : 0.000 Min. Rel. Area : 50% Max. R.T. Dev 0.50min
Max. RRF Dev : 20% Max. Rel. Area : 200%

		Compound	AvgRF	CCRF	%Dev	Area%	Dev(min)	R.T.
1	I	1,4-Dichlorobenzene-d4	1.000	1.000	0.0	78	0.00	4.61
2		1,4-Dioxane	0.517	0.512	1.0	80	-0.02	2.15
3		N-nitrosodimethylamine	0.812	0.771	5.0	76	-0.01	2.51
4		Pyridine	1.421	1.482	-4.3	79	0.00	2.50
5	P	Benzaldehyde	1.157	1.188	-2.7	77	0.00	4.30
6		Aniline	2.238	2.225	0.6	78	0.00	4.40
7	S	2-Fluorophenol	1.371	1.348	1.7	77	-0.03	3.70
8	P	bis(2-Chloroethyl)ether	1.457	1.382	5.1	75	0.00	4.45
9	S	Phenol-d5	1.766	1.698	3.9	76	-0.01	4.41
10	P	Phenol	2.035	2.002	1.6	79	0.01	4.42
11	P	2-Chlorophenol	1.559	1.531	1.8	78	0.00	4.49
12		1,3-Dichlorobenzene	1.582	1.526	3.5	77	0.00	4.58
13		1,4-Dichlorobenzene	1.609	1.587	1.4	78	0.00	4.62
14		1,2-Dichlorobenzene	1.532	1.495	2.4	77	0.00	4.76
15		Benzyl alcohol	1.054	1.017	3.5	76	0.00	4.74
16	P	bis(2-chloroisopropyl)eth	2.556	2.389	6.5	73	0.00	4.85
17	P	2-Methylphenol	1.401	1.368	2.4	78	0.02	4.85
18	P	Acetophenone	2.168	2.176	-0.4	79	0.00	4.94
19	P	Hexachloroethane	0.617	0.616	0.2	79	0.00	5.00
20	P	N-Nitroso-di-n-propylamin	1.100	1.053	4.3	76	0.01	4.96
21	P	3&4-Methylphenol	1.477	1.450	1.8	78	0.02	4.96
22	I	Naphthalene-d8	1.000	1.000	0.0	80	0.00	5.68
23	S	Nitrobenzene-d5	0.362	0.361	0.3	79	0.02	5.07
24	P	Nitrobenzene	0.360	0.358	0.6	78	0.00	5.08
25	P	Isophorone	0.660	0.641	2.9	77	0.00	5.27
26	P	2-Nitrophenol	0.183	0.192	-4.9	83	0.00	5.36
27	P	2,4-Dimethylphenol	0.336	0.335	0.3	79	0.01	5.39
28	P	bis(2-Chloroethoxy)methan	0.383	0.371	3.1	77	0.01	5.47
29		Benzoic Acid	0.272	0.322	-18.4	88	0.02	5.51
30	P	2,4-Dichlorophenol	0.270	0.270	0.0	78	0.00	5.57
31		1,2,4-Trichlorobenzene	0.288	0.285	1.0	78	0.00	5.65
32	P	Naphthalene	0.950	0.918	3.4	77	0.00	5.70
33		alpha-Terpineol	0.315	0.303	3.8	75	0.00	5.69
34	P	4-Chloroaniline	0.419	0.416	0.7	78	0.00	5.79
35		2,6-Dichlorophenol	0.266	0.268	-0.8	79	0.00	5.80
36	P	Hexachlorobutadiene	0.135	0.136	-0.7	78	0.00	5.88
37	P	Caprolactam	0.118	0.121	-2.5	80	0.00	6.12
38	P	4-Chloro-3-methylphenol	0.288	0.293	-1.7	79	0.02	6.32
39	P	2-Methylnaphthalene	0.609	0.577	5.3	75	0.00	6.44
40		1-Methylnaphthalene	0.591	0.582	1.5	78	0.00	6.57
41	P	1,2,4,5-Tetrachlorobenzen	0.260	0.257	1.2	77	0.00	6.69

Continuing Calibration Summary

Job Number: F78009 **Sample:** SU1077-CC1064
Account: TETTNOAK Tetra Tech, Inc **Lab FileID:** U022581.D
Project: Holloman AFB; Alamogordo, NM

42	I	Acenaphthene-d10	1.000	1.000	0.0	78	0.00	7.86
43	P	Hexachlorocyclopentadiene	0.286	0.321	-12.2	86	-0.02	6.72
44	P	2,4,6-Trichlorophenol	0.406	0.409	-0.7	80	0.00	6.84
45	P	2,4,5-Trichlorophenol	0.437	0.432	1.1	77	0.00	6.89
46	S	2-Fluorobiphenyl	1.388	1.350	2.7	77	0.00	6.93
47	P	1,1'-Biphenyl	1.569	1.545	1.5	77	0.00	7.04
48	P	2-Chloronaphthalene	1.253	1.219	2.7	77	-0.01	7.05
49	P	2-Nitroaniline	0.436	0.441	-1.1	79	0.00	7.26
50	P	Acenaphthylene	1.977	1.971	0.3	78	0.00	7.64
51	P	Dimethylphthalate	1.477	1.407	4.7	75	0.01	7.57
52		m-Dinitrobenzene	0.254	0.266	-4.7	81	0.00	7.59
53	P	2,6-Dinitrotoluene	0.341	0.342	-0.3	79	0.00	7.67
54	P	Acenaphthene	1.226	1.194	2.6	77	0.00	7.91
55	P	3-Nitroaniline	0.410	0.408	0.5	79	0.00	7.87
		----------	Amount	Calc.	%Drift		----------	
56	P	2,4-Dinitrophenol	50.000	58.793	-17.6	96	0.01	8.02
		----------	AvgRF	CCRF	%Dev		----------	
57	P	Dibenzofuran	1.738	1.673	3.7	76	0.00	8.15
58	P	2,4-Dinitrotoluene	0.460	0.462	-0.4	79	0.02	8.26
59	P	4-Nitrophenol	0.234	0.223	4.7	76	0.00	8.20
60	P	2,3,4,6-Tetrachlorophenol	0.330	0.322	2.4	76	0.02	8.44
61	P	Fluorene	1.424	1.400	1.7	78	0.02	8.69
62	P	4-Chlorophenyl-phenylethe	0.626	0.599	4.3	76	0.03	8.73
63	P	Diethylphthalate	1.423	1.331	6.5	73	0.00	8.68
64	P	4-Nitroaniline	0.429	0.422	1.6	78	0.00	8.85
65	I	Phenanthrene-d10	1.000	1.000	0.0	78	0.00	10.26
		----------	Amount	Calc.	%Drift		----------	
66	P	4,6-Dinitro-2-methylpheno	50.000	54.975	-10.0	88	-0.03	8.91
		----------	AvgRF	CCRF	%Dev		----------	
67	P	n-Nitrosodiphenylamine	0.589	0.575	2.4	75	-0.03	8.95
68		1,2-Diphenylhydrazine	0.907	0.891	1.8	74	-0.03	8.98
69	S	2,4,6-Tribromophenol	0.093	0.094	-1.1	80	-0.03	9.14
70	P	4-Bromophenyl-phenylether	0.192	0.188	2.1	76	-0.01	9.53
71	P	Hexachlorobenzene	0.188	0.186	1.1	77	-0.02	9.75
72		Simazine	0.116	0.115	0.9	77	0.00	9.90
73	P	Atrazine	0.220	0.217	1.4	75	0.01	9.97
74	P	Pentachlorophenol	0.133	0.130	2.3	75	0.00	10.10
75	P	Phenanthrene	1.141	1.103	3.3	76	0.00	10.30
76	P	Anthracene	1.153	1.147	0.5	78	0.00	10.38
77	P	Carbazole	1.176	1.141	3.0	77	0.02	10.73
78	P	Di-n-butylphthalate	1.319	1.255	4.9	74	0.03	11.57
79	P	Fluoranthene	1.185	1.179	0.5	79	0.03	12.45
80	I	Chrysene-d12	1.000	1.000	0.0	76	0.00	15.14
81		Benzidine	0.793	0.872	-10.0	81	-0.04	12.82
82	P	Pyrene	1.274	1.262	0.9	74	-0.02	12.85
83	S	Terphenyl-d14	0.694	0.685	1.3	74	-0.04	13.27
84	P	Butylbenzylphthalate	0.583	0.569	2.4	73	0.00	14.34
85	P	3,3'-Dichlorobenzidine	0.432	0.435	-0.7	74	0.01	15.20
86	P	Benzo[a]anthracene	1.108	1.106	0.2	75	0.00	15.11
87	P	Chrysene	1.097	1.067	2.7	74	0.00	15.19
88	P	bis(2-Ethylhexyl)phthalat	0.775	0.754	2.7	72	0.00	15.51
89	I	Perylene-d12	1.000	1.000	0.0	76	0.00	17.64

Continuing Calibration Summary

Job Number: F78009
Account: TETTNOAK Tetra Tech, Inc
Project: Holloman AFB; Alamogordo, NM

Sample: SU1077-CC1064
Lab FileID: U022581.D

			Amount	Calc.	%Drift			
90	P	Di-n-octylphthalate	50.000	51.365	-2.7	80	0.00	16.62
			AvgRF	CCRF	%Dev			
91	P	Benzo[b]fluoranthene	1.063	1.122	-5.6	84	0.00	17.03
92	P	Benzo[k]fluoranthene	1.202	1.060	11.8	66	0.00	17.07
93	P	Benzo[a]pyrene	1.079	1.096	-1.6	77	-0.01	17.54
			Amount	Calc.	%Drift			
94	P	Indeno[1,2,3-cd]pyrene	50.000	59.643	-19.3	88	0.00	19.21
			AvgRF	CCRF	%Dev			
95	P	Dibenz[a,h]anthracene	0.891	1.007	-13.0	81	0.00	19.26
96	P	Benzo[g,h,i]perylene	1.030	1.085	-5.3	76	-0.01	19.56

(#) = Out of Range SPCC's out = 0 CCC's out = 0
U022255.D 8270d.m Tue Nov 30 11:12:49 2010

6.7.10

6

Initial Calibration Summary

Job Number: F78009
Account: TETTNOAK Tetra Tech, Inc
Project: Holloman AFB; Alamogordo, NM

Sample: SX763-ICC763
Lab FileID: X015303.D

Response Factor Report MSBNA05

Method : C:\msdchem\1\METHODS\8270d.m (RTE Integrator)
Title : SW846 8270D OR EPA 625
Last Update : Wed Nov 24 08:16:20 2010
Response via : Initial Calibration

Calibration Files
5 =X015300.D 25 =X015301.D 50 =X015302.D 75 =X015303.D
100 =X015304.D 125 =X015305.D icv =X015306.D

Compound	5	25	50	75	100	125	icv	Avg	%RSD
1) I 1,4-Dichlorobenzene-d	----------ISTD----------								
2) 1,4-Dioxane	0.587	0.530	0.492	0.539	0.508	0.531		0.531	6.06
3) N-nitrosodimethyl	0.667	0.642	0.618	0.601	0.618	0.619		0.628	3.69
4) Pyridine	1.436	1.398	1.309	1.301	1.322	1.358		1.354	3.98
5)P Benzaldehyde	1.099	0.959	0.970	0.852	0.655	0.516		0.842	25.87
---- Quadratic regr., Force(0,0) ---- Coefficient = 0.9940									
Response Ratio = 0.00000 + 1.25609 *A + -0.47209 *A^2									
6) Aniline	1.907	1.881	1.956	1.925	1.891	1.879		1.907	1.57
7)S 2-Fluorophenol	1.333	1.255	1.282	1.279	1.253	1.242		1.274	2.57
8)P bis(2-Chloroethyl	1.215	1.203	1.201	1.210	1.218	1.186		1.206	0.95
9)S Phenol-d5	1.519	1.495	1.536	1.521	1.489	1.487		1.508	1.34
10)P Phenol	1.611	1.648	1.697	1.656	1.641	1.618		1.645	1.87
11)P 2-Chlorophenol	1.408	1.378	1.417	1.423	1.413	1.394		1.406	1.17
12) 1,3-Dichlorobenze	1.582	1.517	1.545	1.537	1.510	1.498		1.531	1.97
13) 1,4-Dichlorobenze	1.602	1.547	1.581	1.570	1.571	1.521		1.565	1.79
14) 1,2-Dichlorobenze	1.508	1.456	1.487	1.462	1.434	1.402		1.458	2.58
15) Benzyl alcohol	0.822	0.852	0.898	0.885	0.885	0.849		0.865	3.34
16)P bis(2-chloroisopr	1.551	1.468	1.518	1.474	1.485	1.427		1.487	2.88
17)P 2-Methylphenol	1.203	1.197	1.216	1.219	1.232	1.193		1.210	1.22
18)P Acetophenone	1.971	1.761	1.794	1.792	1.804	1.740		1.810	4.55
19)P Hexachloroethane	0.600	0.581	0.591	0.589	0.588	0.576		0.587	1.45
20)P N-Nitroso-di-n-pr	0.876	0.870	0.894	0.878	0.891	0.863		0.879	1.37
21)P 3&4-Methylphenol	1.274	1.284	1.332	1.313	1.328	1.295		1.304	1.82
22) I Naphthalene-d8	----------ISTD----------								
23)S Nitrobenzene-d5	0.335	0.331	0.330	0.323	0.320	0.324		0.327	1.69
24)P Nitrobenzene	0.346	0.329	0.332	0.324	0.316	0.319		0.327	3.26
25)P Isophorone	0.608	0.611	0.616	0.594	0.609	0.596		0.606	1.46
---- Quadratic regr., Force(0,0) ---- Coefficient = 0.9996									
Response Ratio = 0.00000 + 0.61550 *A + -0.00555 *A^2									
26)P 2-Nitrophenol	0.195	0.213	0.211	0.214	0.212	0.211		0.209	3.43
27)P 2,4-Dimethylpheno	0.349	0.348	0.347	0.334	0.334	0.333		0.341	2.34
28)P bis(2-Chloroethox	0.390	0.373	0.370	0.363	0.363	0.359		0.370	3.05
29) Benzoic Acid	0.258	0.283	0.298	0.304	0.313	0.309		0.294	6.96
30)P 2,4-Dichloropheno	0.314	0.308	0.308	0.303	0.302	0.296		0.305	2.06
31) 1,2,4-Trichlorobe	0.350	0.338	0.340	0.331	0.331	0.326		0.336	2.51
32)P Naphthalene	1.082	1.033	1.032	1.013	1.008	0.992		1.027	3.04
33) alpha-Terpineol	0.264	0.255	0.256	0.247	0.247	0.242		0.252	3.15
34)P 4-Chloroaniline	0.452	0.458	0.463	0.445	0.454	0.443		0.452	1.61
35) 2,6-Dichloropheno	0.303	0.314	0.309	0.302	0.301	0.297		0.304	1.98
36)P Hexachlorobutadie	0.172	0.166	0.166	0.160	0.161	0.158		0.164	3.16
37)P Caprolactam	0.133	0.126	0.125	0.120	0.124	0.119		0.124	3.91
38)P 4-Chloro-3-methyl	0.305	0.317	0.314	0.304	0.316	0.304		0.310	1.99
39)P 2-Methylnaphthale	0.720	0.719	0.712	0.695	0.699	0.682		0.705	2.12

Initial Calibration Summary

Job Number: F78009
Account: TETTNOAK Tetra Tech, Inc
Project: Holloman AFB; Alamogordo, NM

Sample: SX763-ICC763
Lab FileID: X015303.D

```
40)  1-Methylnaphthale 0.715 0.721 0.728 0.699 0.705 0.690       0.710   2.01
41)P 1,2,4,5-Tetrachlo 0.326 0.321 0.313 0.308 0.306 0.299       0.312   3.21

42) I   Acenaphthene-d10      ----------------ISTD---------------------
43)P Hexachlorocyclope 0.263 0.301 0.331 0.340 0.331 0.333       0.316   9.28
44)P 2,4,6-Trichloroph 0.388 0.395 0.394 0.401 0.389 0.393       0.393   1.20
45)P 2,4,5-Trichloroph 0.426 0.427 0.431 0.428 0.420 0.420       0.425   1.01
46)S 2-Fluorobiphenyl  1.441 1.343 1.354 1.363 1.324 1.307       1.355   3.45
47)P 1,1'-Biphenyl     1.720 1.529 1.554 1.547 1.503 1.482       1.556   5.45
48)P 2-Chloronaphthale 1.206 1.214 1.230 1.219 1.176 1.175       1.203   1.90
49)P 2-Nitroaniline    0.321 0.328 0.340 0.341 0.325 0.327       0.330   2.50
50)P Acenaphthylene    2.091 1.995 2.045 2.003 1.965 1.947       2.008   2.65
51)P Dimethylphthalate 1.489 1.448 1.448 1.443 1.421 1.396       1.441   2.16
52)  m-Dinitrobenzene  0.246 0.261 0.274 0.271 0.265 0.270       0.264   3.85
53)P 2,6-Dinitrotoluen 0.334 0.336 0.351 0.350 0.343 0.340       0.342   2.10
54)P Acenaphthene      1.289 1.225 1.257 1.245 1.206 1.193       1.236   2.84
55)P 3-Nitroaniline    0.401 0.406 0.420 0.416 0.400 0.404       0.408   2.05
56)P 2,4-Dinitrophenol 0.059 0.164 0.203 0.227 0.237 0.245       0.189  36.98
            ---- Quadratic regr., Force(0,0) ----  Coefficient =  0.9986
              Response Ratio = 0.00000 + 0.17882 *A + 0.02195 *A^2

57)P Dibenzofuran      1.742 1.688 1.707 1.667 1.618 1.595       1.670   3.31
58)P 2,4-Dinitrotoluen 0.430 0.460 0.462 0.454 0.452 0.442       0.450   2.64
59)P 4-Nitrophenol     0.216 0.197 0.207 0.197 0.195 0.192       0.201   4.38
60)P 2,3,4,6-Tetrachlo 0.320 0.324 0.335 0.331 0.335 0.331       0.329   1.87
61)P Fluorene          1.433 1.408 1.443 1.428 1.401 1.386       1.416   1.54
62)P 4-Chlorophenyl-ph 0.642 0.635 0.626 0.625 0.624 0.612       0.627   1.62
63)P Diethylphthalate  1.434 1.446 1.486 1.458 1.465 1.420       1.451   1.62
64)P 4-Nitroaniline    0.365 0.410 0.432 0.415 0.415 0.417       0.409   5.56

65) I   Phenanthrene-d10      ----------------ISTD---------------------
66)P 4,6-Dinitro-2-met 0.096 0.147 0.154 0.166 0.162 0.167       0.149  18.00
67)P n-Nitrosodiphenyl 0.588 0.568 0.568 0.567 0.561 0.558       0.568   1.85
68)  1,2-Diphenylhydra 0.684 0.665 0.673 0.668 0.668 0.657       0.669   1.33
69)S 2,4,6-Tribromophe 0.106 0.108 0.108 0.110 0.110 0.110       0.109   1.61
70)P 4-Bromophenyl-phe 0.188 0.187 0.192 0.194 0.196 0.191       0.191   1.78
71)P Hexachlorobenzene 0.229 0.215 0.212 0.221 0.217 0.215       0.218   2.68
72)  Simazine          0.118 0.119 0.124 0.120 0.118 0.117       0.119   2.12
73)P Atrazine          0.229 0.199 0.203 0.204 0.201 0.195       0.205   5.82
74)P Pentachlorophenol 0.066 0.096 0.117 0.122 0.128 0.129       0.110  22.28
            ---- Quadratic regr., Force(0,0) ----  Coefficient =  0.9990
              Response Ratio = 0.00000 + 0.10560 *A + 0.00797 *A^2

75)P Phenanthrene      1.143 1.105 1.121 1.098 1.092 1.086       1.108   1.90
76)P Anthracene        1.146 1.131 1.164 1.132 1.121 1.109       1.134   1.71
77)P Carbazole         1.109 1.114 1.130 1.109 1.087 1.085       1.106   1.53
78)P Di-n-butylphthala 1.315 1.325 1.339 1.338 1.344 1.305       1.328   1.16
79)P Fluoranthene      1.117 1.127 1.139 1.137 1.117 1.121       1.126   0.89

80) I   Chrysene-d12          ----------------ISTD---------------------
81)  Benzidine         0.796 0.849 0.945 0.871 0.826 0.774       0.843   7.21
82)P Pyrene            1.313 1.317 1.386 1.312 1.294 1.218       1.307   4.12
83)S Terphenyl-d14     0.765 0.754 0.809 0.755 0.754 0.709       0.757   4.22
84)P Butylbenzylphthal 0.632 0.645 0.692 0.643 0.646 0.610       0.645   4.19
85)P 3,3'-Dichlorobenz 0.417 0.450 0.454 0.454 0.446 0.438       0.443   3.16
86)P Benzo[a]anthracen 1.129 1.134 1.156 1.137 1.139 1.129       1.137   0.89
87)P Chrysene          1.145 1.109 1.107 1.091 1.091 1.087       1.105   1.97
88)P bis(2-Ethylhexyl) 0.829 0.875 0.851 0.860 0.869 0.818       0.850   2.67

89) I   Perylene-d12          ----------------ISTD---------------------
```

Initial Calibration Summary

Job Number: F78009
Account: TETTNOAK Tetra Tech, Inc
Project: Holloman AFB; Alamogordo, NM

Sample: SX763-ICC763
Lab FileID: X015303.D

90)P	Di-n-octylphthala	1.381	1.450	1.311	1.323	1.332	1.326	1.354	3.89
91)P	Benzo[b]fluoranth	1.058	1.073	1.076	1.075	1.062	1.103	1.074	1.48
92)P	Benzo[k]fluoranth	1.040	1.109	1.070	1.072	1.056	1.068	1.069	2.12
93)P	Benzo[a]pyrene	1.045	1.100	1.108	1.098	1.096	1.107	1.092	2.17
94)P	Indeno[1,2,3-cd]p	1.041	1.139	1.289	1.183	1.153	1.164	1.162	6.86
95)P	Dibenz[a,h]anthra	1.064	1.121	1.278	1.207	1.185	1.184	1.173	6.26
96)P	Benzo[g,h,i]peryl	1.212	1.282	1.419	1.291	1.243	1.254	1.283	5.64

(#) = Out of Range

8270d.m Wed Nov 24 08:29:43 2010

Initial Calibration Verification

Job Number: F78009
Account: TETTNOAK Tetra Tech, Inc
Project: Holloman AFB; Alamogordo, NM

Sample: SX763-ICV763
Lab FileID: X015306.D

Evaluate Continuing Calibration Report

```
Data File : C:\msdchem\1\DATA\112310\X015306.D          Vial: 10
Acq On    : 23 Nov 2010   5:12 pm                   Operator: mayrag
Sample    : icv763-50                               Inst    : MSBNA05
Misc      : op35058,sx763,1000,,,1,1,water          Multiplr: 1.00
MS Integration Params: RTEINT.P

Method       : C:\msdchem\1\METHODS\8270d.m (RTE Integrator)
Title        : SW846 8270D OR EPA 625
Last Update  : Wed Nov 24 09:01:30 2010
Response via : Multiple Level Calibration

Min. RRF     :   0.000  Min. Rel. Area :  50%  Max. R.T. Dev  0.50min
Max. RRF Dev :  20%     Max. Rel. Area : 200%
```

		Compound	Amount	Calc.	%Drift	Area%	Dev(min)	R.T.
1	I	1,4-Dichlorobenzene-d4	40.000	40.000	0.0	107	0.00	5.20
2		1,4-Dioxane	50.000	47.456	5.1	0	0.01	2.30
3		N-nitrosodimethylamine	50.000	43.544	12.9	0	0.00	2.62
4		Pyridine	50.000	46.705	6.6	0	0.00	2.65
		----------	Amount	Calc.	%Drift		----------	
5	P	Benzaldehyde	50.000	-40.000	180.0#	0	0.00	4.79
		----------	Amount	Calc.	%Drift		----------	
6		Aniline	50.000	46.439	7.1	0	0.00	4.90
7	S	2-Fluorophenol		----------NA----------				
8	P	bis(2-Chloroethyl)ether	50.000	46.406	7.2	0	0.00	4.96
9	S	Phenol-d5		----------NA----------				
10	P	Phenol	50.000	47.794	4.4	0	0.00	4.94
11	P	2-Chlorophenol	50.000	47.363	5.3	0	0.00	5.02
12		1,3-Dichlorobenzene	50.000	47.259	5.5	0	0.00	5.15
13		1,4-Dichlorobenzene	50.000	46.951	6.1	0	0.00	5.22
14		1,2-Dichlorobenzene	50.000	47.757	4.5	0	0.00	5.36
15		Benzyl alcohol	50.000	53.274	-6.5	0	0.00	5.35
16	P	bis(2-chloroisopropyl)eth	50.000	47.120	5.8	0	0.00	5.47
17	P	2-Methylphenol	50.000	46.748	6.5	0	0.00	5.49
18	P	Acetophenone	50.000	46.667	6.7	0	0.00	5.59
19	P	Hexachloroethane	50.000	46.492	7.0	0	0.00	5.68
20	P	N-Nitroso-di-n-propylamin	50.000	46.124	7.8	0	0.00	5.60
21	P	3&4-Methylphenol	100.000	93.922	6.1	0	0.00	5.64
22	I	Naphthalene-d8	40.000	40.000	0.0	104	0.00	6.42
23	S	Nitrobenzene-d5		----------NA----------				
24	P	Nitrobenzene	50.000	46.352	7.3	0	0.00	5.75
		----------	Amount	Calc.	%Drift		----------	
25	P	Isophorone	50.000	38.260	23.5#	0	0.00	5.98
		----------	Amount	Calc.	%Drift		----------	
26	P	2-Nitrophenol	50.000	48.638	2.7	0	0.00	6.05
27	P	2,4-Dimethylphenol	50.000	40.195	19.6	0	0.00	6.13
28	P	bis(2-Chloroethoxy)methan	50.000	45.857	8.3	0	0.00	6.20
29		Benzoic Acid	100.000	97.730	2.3	0	0.03	6.29
30	P	2,4-Dichlorophenol	50.000	48.187	3.6	0	0.00	6.31
31		1,2,4-Trichlorobenzene	50.000	43.648	12.7	0	0.00	6.36
32	P	Naphthalene	50.000	46.871	6.3	0	0.00	6.43
33		alpha-Terpineol	50.000	49.119	1.8	0	0.00	6.46

Initial Calibration Verification

Job Number: F78009
Account: TETTNOAK Tetra Tech, Inc
Project: Holloman AFB; Alamogordo, NM

Sample: SX763-ICV763
Lab FileID: X015306.D

34	P	4-Chloroaniline	50.000	32.867	34.3#	0	0.00	6.50
35		2,6-Dichlorophenol	50.000	47.250	5.5	0	0.00	6.51
36	P	Hexachlorobutadiene	50.000	48.371	3.3	0	0.00	6.57
37	P	Caprolactam	50.000	49.186	1.6	0	0.00	6.85
38	P	4-Chloro-3-methylphenol	50.000	48.205	3.6	0	0.00	7.02
39	P	2-Methylnaphthalene	50.000	54.337	-8.7	0	0.00	7.12
40		1-Methylnaphthalene	50.000	46.314	7.4	0	0.00	7.22
41	P	1,2,4,5-Tetrachlorobenzen	50.000	45.199	9.6	0	0.00	7.29
42	I	Acenaphthene-d10	40.000	40.000	0.0	109	0.00	8.31
43	P	Hexachlorocyclopentadiene	50.000	49.569	0.9	0	0.00	7.29
44	P	2,4,6-Trichlorophenol	50.000	46.692	6.6	0	0.00	7.43
45	P	2,4,5-Trichlorophenol	50.000	48.302	3.4	0	0.00	7.49
46	S	2-Fluorobiphenyl		----------NA----------				
47	P	1,1'-Biphenyl	50.000	46.227	7.5	0	0.00	7.62
48	P	2-Chloronaphthalene	50.000	46.221	7.6	0	0.00	7.64
49	P	2-Nitroaniline	50.000	52.619	-5.2	0	0.00	7.77
50	P	Acenaphthylene	50.000	46.391	7.2	0	0.00	8.12
51	P	Dimethylphthalate	50.000	47.527	4.9	0	0.00	8.00
52		m-Dinitrobenzene	50.000	52.032	-4.1	0	0.00	8.02
53	P	2,6-Dinitrotoluene	50.000	47.781	4.4	0	0.00	8.07
54	P	Acenaphthene	50.000	47.013	6.0	0	0.00	8.35
55	P	3-Nitroaniline	50.000	37.047	25.9#	0	0.00	8.28
		----------	Amount	Calc.	%Drift	----------		
56	P	2,4-Dinitrophenol	100.000	96.625	3.4	0	0.00	8.41
		----------	Amount	Calc.	%Drift	----------		
57	P	Dibenzofuran	50.000	50.936	-1.9	0	0.00	8.58
58	P	2,4-Dinitrotoluene	50.000	47.488	5.0	0	0.00	8.58
59	P	4-Nitrophenol	100.000	93.205	6.8	0	0.00	8.58
60	P	2,3,4,6-Tetrachlorophenol	50.000	46.671	6.7	0	0.00	8.77
61	P	Fluorene	50.000	48.184	3.6	0	0.00	9.06
62	P	4-Chlorophenyl-phenylethe	50.000	47.731	4.5	0	0.00	9.08
63	P	Diethylphthalate	50.000	48.708	2.6	0	0.00	8.95
64	P	4-Nitroaniline	50.000	54.412	-8.8	0	0.00	9.13
65	I	Phenanthrene-d10	40.000	40.000	0.0	113	0.00	10.53
66	P	4,6-Dinitro-2-methylpheno	100.000	108.158	-8.2	0	0.00	9.17
67	P	n-Nitrosodiphenylamine	50.000	47.186	5.6	0	0.00	9.26
68		1,2-Diphenylhydrazine	50.000	45.083	9.8	0	0.00	9.32
69	S	2,4,6-Tribromophenol		----------NA----------				
70	P	4-Bromophenyl-phenylether	50.000	46.818	6.4	0	0.00	9.82
71	P	Hexachlorobenzene	50.000	46.475	7.0	0	0.00	9.91
72		Simazine	50.000	33.386	33.2#	0	0.00	10.11
73	P	Atrazine	50.000	48.120	3.8	0	0.00	10.17
		----------	Amount	Calc.	%Drift	----------		
74	P	Pentachlorophenol	100.000	98.103	1.9	0	0.00	10.26
		----------	Amount	Calc.	%Drift	----------		
75	P	Phenanthrene	50.000	46.852	6.3	0	0.00	10.57
76	P	Anthracene	50.000	46.874	6.3	0	0.00	10.65
77	P	Carbazole	50.000	52.888	-5.8	0	0.00	10.98
78	P	Di-n-butylphthalate	50.000	47.701	4.6	0	0.00	11.75
79	P	Fluoranthene	50.000	46.919	6.2	0	0.00	12.72
80	I	Chrysene-d12	40.000	40.000	0.0	119	0.00	15.54
81		Benzidine	50.000	25.566	48.9#	0	0.00	13.07
82	P	Pyrene	50.000	46.156	7.7	0	0.00	13.14

Initial Calibration Verification

Job Number: F78009
Account: TETTNOAK Tetra Tech, Inc
Project: Holloman AFB; Alamogordo, NM

Sample: SX763-ICV763
Lab FileID: X015306.D

83	S	Terphenyl-d14		----------NA----------				
84	P	Butylbenzylphthalate	50.000	46.901	6.2	0	0.00	14.65
85	P	3,3'-Dichlorobenzidine	50.000	29.965	40.1#	0	0.00	15.58
86	P	Benzo[a]anthracene	50.000	47.506	5.0	0	0.00	15.53
87	P	Chrysene	50.000	47.159	5.7	0	0.00	15.60
88	P	bis(2-Ethylhexyl)phthalat	50.000	49.171	1.7	0	0.00	15.92
89	I	Perylene-d12	40.000	40.000	0.0	103	0.00	18.23
90	P	Di-n-octylphthalate	50.000	53.861	-7.7	0	0.00	17.19
91	P	Benzo[b]fluoranthene	50.000	49.964	0.1	0	0.00	17.56
92	P	Benzo[k]fluoranthene	50.000	49.275	1.5	0	0.00	17.61
93	P	Benzo[a]pyrene	50.000	47.531	4.9	0	0.00	18.13
94	P	Indeno[1,2,3-cd]pyrene	50.000	44.860	10.3	0	0.00	20.02
95	P	Dibenz[a,h]anthracene	50.000	44.259	11.5	0	0.00	20.08
96	P	Benzo[g,h,i]perylene	50.000	43.529	12.9	0	0.00	20.42

(#) = Out of Range SPCC's out = 0 CCC's out = 0
X015306.D 8270d.m Wed Nov 24 13:57:40 2010

6.7.12

6

Initial Calibration Verification

Job Number: F78009
Account: TETTNOAK Tetra Tech, Inc
Project: Holloman AFB; Alamogordo, NM

Sample: SX763-ICV763
Lab FileID: X015307.D

Evaluate Continuing Calibration Report

```
Data File : C:\msdchem\1\DATA\112310\X015307.D          Vial: 11
Acq On    : 23 Nov 2010   5:39 pm                   Operator: mayrag
Sample    : icv763-50                               Inst    : MSBNA05
Misc      : op35058,sx763,1000,,,1,1,water          Multiplr: 1.00
MS Integration Params: RTEINT.P

Method       : C:\msdchem\1\METHODS\8270d.m (RTE Integrator)
Title        : SW846 8270D OR EPA 625
Last Update  : Wed Nov 24 08:16:20 2010
Response via : Multiple Level Calibration

Min. RRF     :   0.000  Min. Rel. Area :  50%  Max. R.T. Dev  0.50min
Max. RRF Dev :  20%     Max. Rel. Area : 200%
```

		Compound	Amount	Calc.	%Drift	Area%	Dev(min)	R.T.
1	I	1,4-Dichlorobenzene-d4	40.000	40.000	0.0	88	0.00	5.20
2		1,4-Dioxane		----------NA----------				
3		N-nitrosodimethylamine		----------NA----------				
4		Pyridine	50.000	46.765	6.5	0	0.03	2.67
		----------	Amount	Calc.	%Drift	----------		
5	P	Benzaldehyde		----------NA----------				
		----------	Amount	Calc.	%Drift	----------		
6		Aniline	50.000	49.860	0.3	0	0.00	4.90
7	S	2-Fluorophenol		----------NA----------				
8	P	bis(2-Chloroethyl)ether		----------NA----------				
9	S	Phenol-d5		----------NA----------				
10	P	Phenol		----------NA----------				
11	P	2-Chlorophenol		----------NA----------				
12		1,3-Dichlorobenzene		----------NA----------				
13		1,4-Dichlorobenzene		----------NA----------				
14		1,2-Dichlorobenzene		----------NA----------				
15		Benzyl alcohol	50.000	50.117	-0.2	0	0.00	5.35
16	P	bis(2-chloroisopropyl)eth		----------NA----------				
17	P	2-Methylphenol		----------NA----------				
18	P	Acetophenone		----------NA----------				
19	P	Hexachloroethane		----------NA----------				
20	P	N-Nitroso-di-n-propylamin		----------NA----------				
21	P	3&4-Methylphenol		----------NA----------				
22	I	Naphthalene-d8	40.000	40.000	0.0	85	0.00	6.41
23	S	Nitrobenzene-d5		----------NA----------				
24	P	Nitrobenzene		----------NA----------				
		----------	Amount	Calc.	%Drift	----------		
25	P	Isophorone		----------NA----------				
		----------	Amount	Calc.	%Drift	----------		
26	P	2-Nitrophenol		----------NA----------				
27	P	2,4-Dimethylphenol		----------NA----------				
28	P	bis(2-Chloroethoxy)methan		----------NA----------				
29		Benzoic Acid		----------NA----------				
30	P	2,4-Dichlorophenol		----------NA----------				
31		1,2,4-Trichlorobenzene		----------NA----------				
32	P	Naphthalene		----------NA----------				
33		alpha-Terpineol		----------NA----------				

Initial Calibration Verification

Job Number: F78009
Account: TETTNOAK Tetra Tech, Inc
Project: Holloman AFB; Alamogordo, NM

Sample: SX763-ICV763
Lab FileID: X015307.D

34	P	4-Chloroaniline	50.000	51.534	-3.1	0	0.00	6.50
35		2,6-Dichlorophenol		----------NA----------				
36	P	Hexachlorobutadiene		----------NA----------				
37	P	Caprolactam		----------NA----------				
38	P	4-Chloro-3-methylphenol		----------NA----------				
39	P	2-Methylnaphthalene	50.000	48.929	2.1	0	0.00	7.11
40		1-Methylnaphthalene		----------NA----------				
41	P	1,2,4,5-Tetrachlorobenzen		----------NA----------				
42	I	Acenaphthene-d10	40.000	40.000	0.0	89	0.00	8.31
43	P	Hexachlorocyclopentadiene		----------NA----------				
44	P	2,4,6-Trichlorophenol		----------NA----------				
45	P	2,4,5-Trichlorophenol		----------NA----------				
46	S	2-Fluorobiphenyl		----------NA----------				
47	P	1,1'-Biphenyl		----------NA----------				
48	P	2-Chloronaphthalene		----------NA----------				
49	P	2-Nitroaniline	50.000	49.996	0.0	0	0.00	7.77
50	P	Acenaphthylene		----------NA----------				
51	P	Dimethylphthalate		----------NA----------				
52		m-Dinitrobenzene	50.000	47.453	5.1	0	-0.01	8.02
53	P	2,6-Dinitrotoluene		----------NA----------				
54	P	Acenaphthene		----------NA----------				
55	P	3-Nitroaniline	50.000	52.364	-4.7	0	-0.01	8.27
		----------	Amount	Calc.	%Drift	----------		
56	P	2,4-Dinitrophenol		----------NA----------				
		----------	Amount	Calc.	%Drift	----------		
57	P	Dibenzofuran	50.000	48.421	3.2	0	0.00	8.58
58	P	2,4-Dinitrotoluene		----------NA----------				
59	P	4-Nitrophenol		----------NA----------				
60	P	2,3,4,6-Tetrachlorophenol		----------NA----------				
61	P	Fluorene		----------NA----------				
62	P	4-Chlorophenyl-phenylethe		----------NA----------				
63	P	Diethylphthalate		----------NA----------				
64	P	4-Nitroaniline	50.000	53.747	-7.5	0	-0.02	9.12
65	I	Phenanthrene-d10	40.000	40.000	0.0	90	0.00	10.53
66	P	4,6-Dinitro-2-methylpheno		----------NA----------				
67	P	n-Nitrosodiphenylamine		----------NA----------				
68		1,2-Diphenylhydrazine		----------NA----------				
69	S	2,4,6-Tribromophenol		----------NA----------				
70	P	4-Bromophenyl-phenylether		----------NA----------				
71	P	Hexachlorobenzene		----------NA----------				
72		Simazine		----------NA----------				
73	P	Atrazine		----------NA----------				
		----------	Amount	Calc.	%Drift	----------		
74	P	Pentachlorophenol		----------NA----------				
		----------	Amount	Calc.	%Drift	----------		
75	P	Phenanthrene		----------NA----------				
76	P	Anthracene		----------NA----------				
77	P	Carbazole	50.000	50.133	-0.3	0	-0.01	10.97
78	P	Di-n-butylphthalate		----------NA----------				
79	P	Fluoranthene		----------NA----------				
80	I	Chrysene-d12	40.000	40.000	0.0	100	-0.02	15.53
81		Benzidine	50.000	54.254	-8.5	0	0.00	13.08
82	P	Pyrene		----------NA----------				

Initial Calibration Verification

Job Number: F78009
Account: TETTNOAK Tetra Tech, Inc
Project: Holloman AFB; Alamogordo, NM

Sample: SX763-ICV763
Lab FileID: X015307.D

83	S	Terphenyl-d14		----------NA----------				
84	P	Butylbenzylphthalate		----------NA----------				
85	P	3,3'-Dichlorobenzidine	50.000	52.002	-4.0	0	0.00	15.58
86	P	Benzo[a]anthracene		----------NA----------				
87	P	Chrysene		----------NA----------				
88	P	bis(2-Ethylhexyl)phthalat		----------NA----------				
89	I	Perylene-d12	40.000	40.000	0.0	94	0.00	18.23
90	P	Di-n-octylphthalate		----------NA----------				
91	P	Benzo[b]fluoranthene		----------NA----------				
92	P	Benzo[k]fluoranthene		----------NA----------				
93	P	Benzo[a]pyrene		----------NA----------				
94	P	Indeno[1,2,3-cd]pyrene		----------NA----------				
95	P	Dibenz[a,h]anthracene		----------NA----------				
96	P	Benzo[g,h,i]perylene		----------NA----------				

(#) = Out of Range SPCC's out = 0 CCC's out = 0
X015306.D 8270d.m Wed Nov 24 08:30:01 2010

6.7.13

6

Continuing Calibration Summary

Job Number: F78009
Account: TETTNOAK Tetra Tech, Inc
Project: Holloman AFB; Alamogordo, NM

Sample: SX769-CC763
Lab FileID: X015436.D

Evaluate Continuing Calibration Report

```
Data File : C:\msdchem\1\DATA\113010\X015436.D          Vial: 3
Acq On    : 30 Nov 2010  12:45 pm                   Operator: mayrag
Sample    : cc763-75                                Inst    : MSBNA05
Misc      : op35058,sx769,1000,,,1,1,water          Multiplr: 1.00
MS Integration Params: RTEINT.P

Method       : C:\msdchem\1\METHODS\8270d.m (RTE Integrator)
Title        : SW846 8270D OR EPA 625
Last Update  : Wed Dec 01 08:10:08 2010
Response via : Multiple Level Calibration

Min. RRF     :   0.000  Min. Rel. Area :  50%  Max. R.T. Dev  0.50min
Max. RRF Dev :  20%     Max. Rel. Area : 200%
```

		Compound	AvgRF	CCRF	%Dev	Area%	Dev(min)	R.T.
1	I	1,4-Dichlorobenzene-d4	1.000	1.000	0.0	142	0.00	5.12
2		1,4-Dioxane	0.531	0.415	21.8#	109	0.00	2.19
3		N-nitrosodimethylamine	0.628	0.551	12.3	130	0.00	2.52
4		Pyridine	1.354	1.150	15.1	125	0.00	2.54
		----------	Amount	Calc.	%Drift		----------	
5	P	Benzaldehyde	37.500	27.194	27.5#	113	0.00	4.70
		----------	AvgRF	CCRF	%Dev		----------	
6		Aniline	1.907	1.729	9.3	127	0.00	4.82
7	S	2-Fluorophenol	1.274	1.213	4.8	134	-0.02	3.94
8	P	bis(2-Chloroethyl)ether	1.206	1.187	1.6	139	0.00	4.88
9	S	Phenol-d5	1.508	1.452	3.7	135	0.00	4.85
10	P	Phenol	1.645	1.578	4.1	135	0.00	4.86
11	P	2-Chlorophenol	1.406	1.379	1.9	137	0.00	4.94
12		1,3-Dichlorobenzene	1.531	1.489	2.7	137	0.00	5.06
13		1,4-Dichlorobenzene	1.565	1.513	3.3	136	0.00	5.14
14		1,2-Dichlorobenzene	1.458	1.417	2.8	137	0.00	5.27
15		Benzyl alcohol	0.865	0.835	3.5	134	0.00	5.27
16	P	bis(2-chloroisopropyl)eth	1.487	1.461	1.7	140	0.00	5.39
17	P	2-Methylphenol	1.210	1.185	2.1	138	0.00	5.41
18	P	Acetophenone	1.810	1.777	1.8	140	0.00	5.50
19	P	Hexachloroethane	0.587	0.569	3.1	137	0.00	5.60
20	P	N-Nitroso-di-n-propylamin	0.879	0.849	3.4	137	0.01	5.53
21	P	3&4-Methylphenol	1.304	1.285	1.5	139	0.00	5.56
22	I	Naphthalene-d8	1.000	1.000	0.0	141	0.00	6.33
23	S	Nitrobenzene-d5	0.327	0.313	4.3	137	0.00	5.65
24	P	Nitrobenzene	0.327	0.312	4.6	136	0.00	5.67
		----------	Amount	Calc.	%Drift		----------	
25	P	Isophorone	75.000	72.015	4.0	138	0.00	5.90
		----------	AvgRF	CCRF	%Dev		----------	
26	P	2-Nitrophenol	0.209	0.206	1.4	136	0.00	5.97
27	P	2,4-Dimethylphenol	0.341	0.322	5.6	136	0.00	6.05
28	P	bis(2-Chloroethoxy)methan	0.370	0.358	3.2	139	0.00	6.11
29		Benzoic Acid	0.294	0.283	3.7	131	0.02	6.22
30	P	2,4-Dichlorophenol	0.305	0.293	3.9	136	0.00	6.22
31		1,2,4-Trichlorobenzene	0.336	0.323	3.9	138	0.00	6.28
32	P	Naphthalene	1.027	0.983	4.3	137	0.00	6.35
33		alpha-Terpineol	0.252	0.245	2.8	140	0.00	6.38

Continuing Calibration Summary

Job Number: F78009
Account: TETTNOAK Tetra Tech, Inc
Project: Holloman AFB; Alamogordo, NM

Sample: SX769-CC763
Lab FileID: X015436.D

34	P	4-Chloroaniline	0.452	0.416	8.0	132	0.00	6.42
35		2,6-Dichlorophenol	0.304	0.300	1.3	140	0.00	6.44
36	P	Hexachlorobutadiene	0.164	0.156	4.9	137	0.00	6.48
37	P	Caprolactam	0.124	0.115	7.3	136	0.02	6.77
38	P	4-Chloro-3-methylphenol	0.310	0.297	4.2	137	0.01	6.93
39	P	2-Methylnaphthalene	0.705	0.680	3.5	138	0.00	7.03
40		1-Methylnaphthalene	0.710	0.687	3.2	139	0.00	7.13
41	P	1,2,4,5-Tetrachlorobenzen	0.312	0.303	2.9	139	0.00	7.21
42	I	Acenaphthene-d10	1.000	1.000	0.0	143	0.00	8.20
43	P	Hexachlorocyclopentadiene	0.316	0.339	-7.3	142	0.00	7.20
44	P	2,4,6-Trichlorophenol	0.393	0.391	0.5	139	0.00	7.34
45	P	2,4,5-Trichlorophenol	0.425	0.419	1.4	140	0.00	7.39
46	S	2-Fluorobiphenyl	1.355	1.333	1.6	140	0.00	7.42
47	P	1,1'-Biphenyl	1.556	1.523	2.1	141	0.00	7.53
48	P	2-Chloronaphthalene	1.203	1.181	1.8	139	0.00	7.54
49	P	2-Nitroaniline	0.330	0.314	4.8	132	0.00	7.68
50	P	Acenaphthylene	2.008	1.942	3.3	139	0.00	8.02
51	P	Dimethylphthalate	1.441	1.380	4.2	137	0.00	7.91
52		m-Dinitrobenzene	0.264	0.256	3.0	135	0.00	7.93
53	P	2,6-Dinitrotoluene	0.342	0.332	2.9	135	0.00	7.97
54	P	Acenaphthene	1.236	1.176	4.9	135	0.00	8.25
55	P	3-Nitroaniline	0.408	0.387	5.1	133	0.00	8.18
		----------	Amount	Calc.	%Drift	----------		
56	P	2,4-Dinitrophenol	75.000	75.671	-0.9	140	0.00	8.31
		----------	AvgRF	CCRF	%Dev	----------		
57	P	Dibenzofuran	1.670	1.597	4.4	137	0.00	8.47
58	P	2,4-Dinitrotoluene	0.450	0.425	5.6	134	0.00	8.48
59	P	4-Nitrophenol	0.201	0.184	8.5	134	0.00	8.48
60	P	2,3,4,6-Tetrachlorophenol	0.329	0.327	0.6	141	0.00	8.67
61	P	Fluorene	1.416	1.356	4.2	136	0.00	8.94
62	P	4-Chlorophenyl-phenylethe	0.627	0.601	4.1	137	0.00	8.97
63	P	Diethylphthalate	1.451	1.379	5.0	135	0.00	8.85
64	P	4-Nitroaniline	0.409	0.387	5.4	133	0.00	9.03
65	I	Phenanthrene-d10	1.000	1.000	0.0	136	0.00	10.40
66	P	4,6-Dinitro-2-methylpheno	0.149	0.158	-6.0	129	0.00	9.06
67	P	n-Nitrosodiphenylamine	0.568	0.564	0.7	135	0.00	9.16
68		1,2-Diphenylhydrazine	0.669	0.660	1.3	134	0.00	9.20
69	S	2,4,6-Tribromophenol	0.109	0.110	-0.9	135	0.00	9.31
70	P	4-Bromophenyl-phenylether	0.191	0.193	-1.0	136	0.00	9.71
71	P	Hexachlorobenzene	0.218	0.216	0.9	133	0.00	9.78
72		Simazine	0.119	0.105	11.8	119	0.00	10.00
73	P	Atrazine	0.205	0.196	4.4	130	0.00	10.06
		----------	Amount	Calc.	%Drift	----------		
74	P	Pentachlorophenol	75.000	85.320	-13.8	156	0.00	10.14
		----------	AvgRF	CCRF	%Dev	----------		
75	P	Phenanthrene	1.108	1.071	3.3	133	0.00	10.44
76	P	Anthracene	1.134	1.100	3.0	132	0.00	10.53
77	P	Carbazole	1.106	1.050	5.1	129	0.00	10.85
78	P	Di-n-butylphthalate	1.328	1.263	4.9	128	0.02	11.62
79	P	Fluoranthene	1.126	1.046	7.1	125	0.02	12.59
80	I	Chrysene-d12	1.000	1.000	0.0	124	0.00	15.40
81		Benzidine	0.843	0.807	4.3	115	-0.01	12.94
82	P	Pyrene	1.307	1.333	-2.0	126	-0.02	13.00

Continuing Calibration Summary

Job Number: F78009
Account: TETTNOAK Tetra Tech, Inc
Project: Holloman AFB; Alamogordo, NM

Sample: SX769-CC763
Lab FileID: X015436.D

83	S	Terphenyl-d14	0.757	0.760	-0.4	125	-0.01	13.43
84	P	Butylbenzylphthalate	0.645	0.638	1.1	123	0.00	14.52
85	P	3,3'-Dichlorobenzidine	0.443	0.439	0.9	120	0.00	15.45
86	P	Benzo[a]anthracene	1.137	1.114	2.0	121	0.00	15.38
87	P	Chrysene	1.105	1.064	3.7	121	0.00	15.46
88	P	bis(2-Ethylhexyl)phthalat	0.850	0.845	0.6	121	0.02	15.79
89	I	Perylene-d12	1.000	1.000	0.0	113	0.00	18.08
90	P	Di-n-octylphthalate	1.354	1.367	-1.0	117	0.01	17.06
91	P	Benzo[b]fluoranthene	1.074	1.065	0.8	112	0.00	17.42
92	P	Benzo[k]fluoranthene	1.069	1.075	-0.6	114	0.00	17.47
93	P	Benzo[a]pyrene	1.092	1.089	0.3	113	0.00	17.98
94	P	Indeno[1,2,3-cd]pyrene	1.162	1.144	1.5	110	0.02	19.88
95	P	Dibenz[a,h]anthracene	1.173	1.152	1.8	108	0.01	19.94
96	P	Benzo[g,h,i]perylene	1.283	1.226	4.4	108	0.02	20.28

(#) = Out of Range SPCC's out = 0 CCC's out = 0
X015303.D 8270d.m Wed Dec 01 13:25:58 2010

6.7.14

6

Continuing Calibration Summary

Job Number: F78009
Account: TETTNOAK Tetra Tech, Inc
Project: Holloman AFB; Alamogordo, NM

Sample: SX770-CC763
Lab FileID: X015458.D

Evaluate Continuing Calibration Report

```
Data File : C:\msdchem\1\DATA\120110\X015458.D          Vial: 3
Acq On    :  1 Dec 2010   9:18 am                   Operator: mayrag
Sample    : cc763-75                                Inst    : MSBNA05
Misc      : op35058,sx770,1000,,,1,1,water          Multiplr: 1.00
MS Integration Params: RTEINT.P

Method       : C:\msdchem\1\METHODS\8270d.m (RTE Integrator)
Title        : SW846 8270D OR EPA 625
Last Update  : Thu Dec 02 07:27:20 2010
Response via : Multiple Level Calibration

Min. RRF     :   0.000  Min. Rel. Area :  50%  Max. R.T. Dev  0.50min
Max. RRF Dev :  20%     Max. Rel. Area : 200%
```

		Compound	AvgRF	CCRF	%Dev	Area%	Dev(min)	R.T.
1	I	1,4-Dichlorobenzene-d4	1.000	1.000	0.0	123	0.00	5.10
2		1,4-Dioxane	0.531	0.438	17.5	100	-0.02	2.17
3		N-nitrosodimethylamine	0.628	0.580	7.6	118	-0.02	2.49
4		Pyridine	1.354	1.180	12.9	111	-0.02	2.51
		----------	Amount	Calc.	%Drift		----------	
5	P	Benzaldehyde	37.500	45.860	-22.3#	126	-0.01	4.68
		----------	AvgRF	CCRF	%Dev		----------	
6		Aniline	1.907	1.772	7.1	113	0.00	4.80
7	S	2-Fluorophenol	1.274	1.228	3.6	118	0.00	3.92
8	P	bis(2-Chloroethyl)ether	1.206	1.183	1.9	120	0.00	4.86
9	S	Phenol-d5	1.508	1.472	2.4	119	0.00	4.83
10	P	Phenol	1.645	1.588	3.5	118	0.00	4.84
11	P	2-Chlorophenol	1.406	1.391	1.1	120	0.00	4.92
12		1,3-Dichlorobenzene	1.531	1.539	-0.5	123	0.00	5.04
13		1,4-Dichlorobenzene	1.565	1.563	0.1	122	0.00	5.11
14		1,2-Dichlorobenzene	1.458	1.445	0.9	121	0.00	5.25
15		Benzyl alcohol	0.865	0.843	2.5	117	0.00	5.25
16	P	bis(2-chloroisopropyl)eth	1.487	1.506	-1.3	126	0.00	5.37
17	P	2-Methylphenol	1.210	1.179	2.6	119	0.00	5.39
18	P	Acetophenone	1.810	1.815	-0.3	124	0.00	5.48
19	P	Hexachloroethane	0.587	0.594	-1.2	124	0.00	5.57
20	P	N-Nitroso-di-n-propylamin	0.879	0.853	3.0	119	0.01	5.50
21	P	3&4-Methylphenol	1.304	1.283	1.6	120	0.01	5.54
22	I	Naphthalene-d8	1.000	1.000	0.0	121	0.00	6.31
23	S	Nitrobenzene-d5	0.327	0.321	1.8	120	0.00	5.63
24	P	Nitrobenzene	0.327	0.314	4.0	117	-0.01	5.64
		----------	Amount	Calc.	%Drift		----------	
25	P	Isophorone	75.000	72.009	4.0	119	0.00	5.88
		----------	AvgRF	CCRF	%Dev		----------	
26	P	2-Nitrophenol	0.209	0.209	0.0	118	0.00	5.95
27	P	2,4-Dimethylphenol	0.341	0.328	3.8	119	0.00	6.03
28	P	bis(2-Chloroethoxy)methan	0.370	0.363	1.9	121	0.00	6.10
29		Benzoic Acid	0.294	0.283	3.7	113	0.02	6.19
30	P	2,4-Dichlorophenol	0.305	0.303	0.7	121	0.00	6.21
31		1,2,4-Trichlorobenzene	0.336	0.333	0.9	122	0.00	6.26
32	P	Naphthalene	1.027	1.000	2.6	120	0.00	6.33
33		alpha-Terpineol	0.252	0.250	0.8	123	0.00	6.36

Continuing Calibration Summary

Job Number: F78009 **Sample:** SX770-CC763
Account: TETTNOAK Tetra Tech, Inc **Lab FileID:** X015458.D
Project: Holloman AFB; Alamogordo, NM

34	P	4-Chloroaniline	0.452	0.421	6.9	115	0.00	6.40
35		2,6-Dichlorophenol	0.304	0.303	0.3	122	0.00	6.41
36	P	Hexachlorobutadiene	0.164	0.162	1.2	122	0.00	6.46
37	P	Caprolactam	0.124	0.119	4.0	121	0.01	6.75
38	P	4-Chloro-3-methylphenol	0.310	0.299	3.5	119	0.01	6.91
39	P	2-Methylnaphthalene	0.705	0.696	1.3	121	0.01	7.01
40		1-Methylnaphthalene	0.710	0.696	2.0	121	0.00	7.10
41	P	1,2,4,5-Tetrachlorobenzen	0.312	0.308	1.3	121	0.01	7.18
42	I	Acenaphthene-d10	1.000	1.000	0.0	121	0.00	8.17
43	P	Hexachlorocyclopentadiene	0.316	0.338	-7.0	121	0.00	7.18
44	P	2,4,6-Trichlorophenol	0.393	0.393	0.0	119	0.00	7.32
45	P	2,4,5-Trichlorophenol	0.425	0.422	0.7	120	0.00	7.37
46	S	2-Fluorobiphenyl	1.355	1.351	0.3	120	0.00	7.40
47	P	1,1'-Biphenyl	1.556	1.576	-1.3	124	0.00	7.51
48	P	2-Chloronaphthalene	1.203	1.197	0.5	119	0.00	7.52
49	P	2-Nitroaniline	0.330	0.324	1.8	115	0.00	7.65
50	P	Acenaphthylene	2.008	1.980	1.4	120	0.00	8.00
51	P	Dimethylphthalate	1.441	1.391	3.5	117	0.00	7.88
52		m-Dinitrobenzene	0.264	0.261	1.1	117	0.00	7.90
53	P	2,6-Dinitrotoluene	0.342	0.338	1.2	117	0.00	7.94
54	P	Acenaphthene	1.236	1.206	2.4	118	0.00	8.22
55	P	3-Nitroaniline	0.408	0.388	4.9	113	0.00	8.15
		----------	Amount	Calc.	%Drift	----------		
56	P	2,4-Dinitrophenol	75.000	74.839	0.2	118	0.00	8.28
		----------	AvgRF	CCRF	%Dev	----------		
57	P	Dibenzofuran	1.670	1.632	2.3	119	0.00	8.44
58	P	2,4-Dinitrotoluene	0.450	0.434	3.6	116	0.00	8.45
59	P	4-Nitrophenol	0.201	0.192	4.5	118	0.00	8.45
60	P	2,3,4,6-Tetrachlorophenol	0.329	0.328	0.3	120	0.00	8.63
61	P	Fluorene	1.416	1.381	2.5	118	0.00	8.91
62	P	4-Chlorophenyl-phenylethe	0.627	0.605	3.5	117	0.00	8.94
63	P	Diethylphthalate	1.451	1.417	2.3	118	0.00	8.82
64	P	4-Nitroaniline	0.409	0.394	3.7	115	0.00	9.00
65	I	Phenanthrene-d10	1.000	1.000	0.0	117	0.00	10.36
66	P	4,6-Dinitro-2-methylpheno	0.149	0.159	-6.7	112	0.00	9.03
67	P	n-Nitrosodiphenylamine	0.568	0.566	0.4	116	0.00	9.13
68		1,2-Diphenylhydrazine	0.669	0.665	0.6	116	0.00	9.17
69	S	2,4,6-Tribromophenol	0.109	0.110	-0.9	116	0.00	9.28
70	P	4-Bromophenyl-phenylether	0.191	0.192	-0.5	116	0.00	9.68
71	P	Hexachlorobenzene	0.218	0.220	-0.9	116	0.00	9.75
72		Simazine	0.119	0.105	11.8	102	0.00	9.97
73	P	Atrazine	0.205	0.205	0.0	117	0.00	10.02
		----------	Amount	Calc.	%Drift	----------		
74	P	Pentachlorophenol	75.000	85.592	-14.1	134	0.00	10.10
		----------	AvgRF	CCRF	%Dev	----------		
75	P	Phenanthrene	1.108	1.093	1.4	116	0.00	10.40
76	P	Anthracene	1.134	1.116	1.6	115	0.00	10.49
77	P	Carbazole	1.106	1.085	1.9	114	0.00	10.82
78	P	Di-n-butylphthalate	1.328	1.300	2.1	113	0.02	11.58
79	P	Fluoranthene	1.126	1.096	2.7	112	0.02	12.55
80	I	Chrysene-d12	1.000	1.000	0.0	112	0.00	15.36
81		Benzidine	0.843	0.858	-1.8	110	-0.02	12.91
82	P	Pyrene	1.307	1.329	-1.7	113	-0.02	12.96

Continuing Calibration Summary

Job Number: F78009
Account: TETTNOAK Tetra Tech, Inc
Project: Holloman AFB; Alamogordo, NM

Sample: SX770-CC763
Lab FileID: X015458.D

83	S	Terphenyl-d14	0.757	0.760	-0.4	113	-0.02	13.39
84	P	Butylbenzylphthalate	0.645	0.648	-0.5	113	0.00	14.48
85	P	3,3'-Dichlorobenzidine	0.443	0.461	-4.1	114	0.00	15.41
86	P	Benzo[a]anthracene	1.137	1.135	0.2	112	0.00	15.34
87	P	Chrysene	1.105	1.092	1.2	112	0.00	15.42
88	P	bis(2-Ethylhexyl)phthalat	0.850	0.870	-2.4	113	0.00	15.76
89	I	Perylene-d12	1.000	1.000	0.0	105	0.00	18.04
90	P	Di-n-octylphthalate	1.354	1.404	-3.7	111	0.01	17.02
91	P	Benzo[b]fluoranthene	1.074	1.070	0.4	104	0.00	17.38
92	P	Benzo[k]fluoranthene	1.069	1.063	0.6	104	0.00	17.43
93	P	Benzo[a]pyrene	1.092	1.093	-0.1	104	0.00	17.94
94	P	Indeno[1,2,3-cd]pyrene	1.162	1.138	2.1	101	0.01	19.83
95	P	Dibenz[a,h]anthracene	1.173	1.154	1.6	100	0.02	19.90
96	P	Benzo[g,h,i]perylene	1.283	1.233	3.9	100	0.02	20.23

(#) = Out of Range SPCC's out = 0 CCC's out = 0
X015303.D 8270d.m Thu Dec 02 11:19:17 2010

6.7.15

6

Southeast ACCUTEST LABORATORIES

GC Volatiles

QC Data Summaries

Includes the following where applicable:

- Method Blank Summaries
- Blank Spike Summaries
- Matrix Spike and Duplicate Summaries
- Surrogate Recovery Summaries
- GC Surrogate Retention Time Summaries
- Initial and Continuing Calibration Summaries

Method Blank Summary

Job Number: F78009
Account: TETTNOAK Tetra Tech, Inc
Project: Holloman AFB; Alamogordo, NM

Sample	File ID	DF	Analyzed	By	Prep Date	Prep Batch	Analytical Batch
GCD4156-MB	CD100582.D	1	11/18/10	WV	n/a	n/a	GCD4156

The QC reported here applies to the following samples: **Method:** SW846 8015C

F78009-36, F78009-37

CAS No.	Compound	Result	RL	MDL	Units	Q
	TPH-GRO (C6-C10)	ND	0.10	0.050	mg/l	

CAS No.	Surrogate Recoveries		Limits
460-00-4	4-Bromofluorobenzene	87%	57-129%
98-08-8	aaa-Trifluorotoluene	81%	58-120%

Method Blank Summary

Job Number: F78009
Account: TETTNOAK Tetra Tech, Inc
Project: Holloman AFB; Alamogordo, NM

Sample	File ID	DF	Analyzed	By	Prep Date	Prep Batch	Analytical Batch
GCD4158-MB	CD100632.D	1	11/19/10	WV	n/a	n/a	GCD4158

The QC reported here applies to the following samples: **Method:** SW846 8015C

F78009-38, F78009-39

CAS No.	Compound	Result	RL	MDL	Units	Q
	TPH-GRO (C6-C10)	ND	0.10	0.050	mg/l	

CAS No.	Surrogate Recoveries		Limits
460-00-4	4-Bromofluorobenzene	91%	57-129%
98-08-8	aaa-Trifluorotoluene	82%	58-120%

Method Blank Summary

Job Number: F78009
Account: TETTNOAK Tetra Tech, Inc
Project: Holloman AFB; Alamogordo, NM

Sample	File ID	DF	Analyzed	By	Prep Date	Prep Batch	Analytical Batch
GQR2473-MB	QR056848.D	1	11/19/10	AH	n/a	n/a	GQR2473

The QC reported here applies to the following samples: **Method:** SW846 8015C

F78009-1, F78009-2, F78009-3, F78009-4, F78009-5, F78009-6, F78009-7, F78009-8, F78009-9, F78009-10

CAS No.	Compound	Result	RL	MDL	Units	Q
	TPH-GRO (C6-C10)	ND	5.0	2.5	mg/kg	

CAS No.	Surrogate Recoveries		Limits
460-00-4	4-Bromofluorobenzene	77%	56-136%
98-08-8	aaa-Trifluorotoluene	69%	61-121%

Method Blank Summary

Job Number: F78009
Account: TETTNOAK Tetra Tech, Inc
Project: Holloman AFB; Alamogordo, NM

Sample	File ID	DF	Analyzed	By	Prep Date	Prep Batch	Analytical Batch
GQR2474-MB	QR056880.D	1	11/20/10	AH	n/a	n/a	GQR2474

The QC reported here applies to the following samples: **Method:** SW846 8015C

F78009-11, F78009-12, F78009-13, F78009-14, F78009-15, F78009-16, F78009-17, F78009-18, F78009-19, F78009-20, F78009-21, F78009-22, F78009-23, F78009-24, F78009-26, F78009-27, F78009-28, F78009-29, F78009-30

CAS No.	Compound	Result	RL	MDL	Units	Q
	TPH-GRO (C6-C10)	ND	5.0	2.5	mg/kg	

CAS No.	Surrogate Recoveries		Limits
460-00-4	4-Bromofluorobenzene	76%	56-136%
98-08-8	aaa-Trifluorotoluene	67%	61-121%

Method Blank Summary

Job Number: F78009
Account: TETTNOAK Tetra Tech, Inc
Project: Holloman AFB; Alamogordo, NM

Sample	File ID	DF	Analyzed	By	Prep Date	Prep Batch	Analytical Batch
GQR2475-MB	QR056912.D	1	11/20/10	AH	n/a	n/a	GQR2475

The QC reported here applies to the following samples: **Method:** SW846 8015C

F78009-31, F78009-32, F78009-33, F78009-34, F78009-35

CAS No.	Compound	Result	RL	MDL	Units	Q
	TPH-GRO (C6-C10)	ND	5.0	2.5	mg/kg	

CAS No.	Surrogate Recoveries		Limits
460-00-4	4-Bromofluorobenzene	74%	56-136%
98-08-8	aaa-Trifluorotoluene	65%	61-121%

Method Blank Summary

Job Number: F78009
Account: TETTNOAK Tetra Tech, Inc
Project: Holloman AFB; Alamogordo, NM

Sample	File ID	DF	Analyzed	By	Prep Date	Prep Batch	Analytical Batch
GQR2476-MB	QR056947.D	1	11/22/10	AH	n/a	n/a	GQR2476

The QC reported here applies to the following samples: **Method:** SW846 8015C

F78009-25

CAS No.	Compound	Result	RL	MDL	Units	Q
	TPH-GRO (C6-C10)	ND	5.0	2.5	mg/kg	

CAS No.	Surrogate Recoveries		Limits
460-00-4	4-Bromofluorobenzene	76%	56-136%
98-08-8	aaa-Trifluorotoluene	66%	61-121%

Blank Spike Summary

Job Number: F78009
Account: TETTNOAK Tetra Tech, Inc
Project: Holloman AFB; Alamogordo, NM

Sample	File ID	DF	Analyzed	By	Prep Date	Prep Batch	Analytical Batch
GCD4156-BS	CD100581.D	1	11/18/10	WV	n/a	n/a	GCD4156

The QC reported here applies to the following samples: **Method:** SW846 8015C

F78009-36, F78009-37

CAS No.	Compound	Spike mg/l	BSP mg/l	BSP %	Limits
	TPH-GRO (C6-C10)	0.4	0.373	93	75-129

CAS No.	Surrogate Recoveries	BSP	Limits
460-00-4	4-Bromofluorobenzene	108%	57-129%
98-08-8	aaa-Trifluorotoluene	118%	58-120%

Blank Spike Summary

Job Number: F78009
Account: TETTNOAK Tetra Tech, Inc
Project: Holloman AFB; Alamogordo, NM

Sample	File ID	DF	Analyzed	By	Prep Date	Prep Batch	Analytical Batch
GCD4158-BS	CD100631.D	1	11/19/10	WV	n/a	n/a	GCD4158

The QC reported here applies to the following samples: **Method:** SW846 8015C

F78009-38, F78009-39

CAS No.	Compound	Spike mg/l	BSP mg/l	BSP %	Limits
	TPH-GRO (C6-C10)	0.4	0.431	108	75-129

CAS No.	Surrogate Recoveries	BSP	Limits
460-00-4	4-Bromofluorobenzene	114%	57-129%
98-08-8	aaa-Trifluorotoluene	108%	58-120%

Blank Spike Summary

Job Number: F78009
Account: TETTNOAK Tetra Tech, Inc
Project: Holloman AFB; Alamogordo, NM

Sample	File ID	DF	Analyzed	By	Prep Date	Prep Batch	Analytical Batch
GQR2473-BS	QR056847.D	1	11/19/10	AH	n/a	n/a	GQR2473

The QC reported here applies to the following samples: **Method:** SW846 8015C

F78009-1, F78009-2, F78009-3, F78009-4, F78009-5, F78009-6, F78009-7, F78009-8, F78009-9, F78009-10

CAS No.	Compound	Spike mg/kg	BSP mg/kg	BSP %	Limits
	TPH-GRO (C6-C10)	20	19.3	97	74-121

CAS No.	Surrogate Recoveries	BSP	Limits
460-00-4	4-Bromofluorobenzene	87%	56-136%
98-08-8	aaa-Trifluorotoluene	90%	61-121%

Blank Spike Summary

Job Number: F78009
Account: TETTNOAK Tetra Tech, Inc
Project: Holloman AFB; Alamogordo, NM

Sample	File ID	DF	Analyzed	By	Prep Date	Prep Batch	Analytical Batch
GQR2474-BS	QR056879.D	1	11/20/10	AH	n/a	n/a	GQR2474

The QC reported here applies to the following samples: **Method:** SW846 8015C

F78009-11, F78009-12, F78009-13, F78009-14, F78009-15, F78009-16, F78009-17, F78009-18, F78009-19, F78009-20, F78009-21, F78009-22, F78009-23, F78009-24, F78009-26, F78009-27, F78009-28, F78009-29, F78009-30

CAS No.	Compound	Spike mg/kg	BSP mg/kg	BSP %	Limits
	TPH-GRO (C6-C10)	20	17.9	90	74-121

CAS No.	Surrogate Recoveries	BSP	Limits
460-00-4	4-Bromofluorobenzene	87%	56-136%
98-08-8	aaa-Trifluorotoluene	89%	61-121%

Blank Spike Summary

Job Number: F78009
Account: TETTNOAK Tetra Tech, Inc
Project: Holloman AFB; Alamogordo, NM

Sample	File ID	DF	Analyzed	By	Prep Date	Prep Batch	Analytical Batch
GQR2475-BS	QR056911.D	1	11/20/10	AH	n/a	n/a	GQR2475

The QC reported here applies to the following samples: **Method:** SW846 8015C

F78009-31, F78009-32, F78009-33, F78009-34, F78009-35

CAS No.	Compound	Spike mg/kg	BSP mg/kg	BSP %	Limits
	TPH-GRO (C6-C10)	20	18.1	91	74-121

CAS No.	Surrogate Recoveries	BSP	Limits
460-00-4	4-Bromofluorobenzene	82%	56-136%
98-08-8	aaa-Trifluorotoluene	85%	61-121%

Blank Spike Summary

Job Number: F78009
Account: TETTNOAK Tetra Tech, Inc
Project: Holloman AFB; Alamogordo, NM

Sample	File ID	DF	Analyzed	By	Prep Date	Prep Batch	Analytical Batch
GQR2476-BS	QR056946.D	1	11/22/10	AH	n/a	n/a	GQR2476

The QC reported here applies to the following samples: **Method:** SW846 8015C

F78009-25

CAS No.	Compound	Spike mg/kg	BSP mg/kg	BSP %	Limits
	TPH-GRO (C6-C10)	20	21.7	109	74-121

CAS No.	Surrogate Recoveries	BSP	Limits
460-00-4	4-Bromofluorobenzene	93%	56-136%
98-08-8	aaa-Trifluorotoluene	94%	61-121%

Matrix Spike/Matrix Spike Duplicate Summary

Job Number: F78009
Account: TETTNOAK Tetra Tech, Inc
Project: Holloman AFB; Alamogordo, NM

Sample	File ID	DF	Analyzed	By	Prep Date	Prep Batch	Analytical Batch
F78009-37MS	CD100612.D	1	11/18/10	WV	n/a	n/a	GCD4156
F78009-37MSD	CD100613.D	1	11/18/10	WV	n/a	n/a	GCD4156
F78009-37	CD100593.D	1	11/18/10	WV	n/a	n/a	GCD4156

The QC reported here applies to the following samples: **Method:** SW846 8015C

F78009-36, F78009-37

CAS No.	Compound	F78009-37 mg/l	Q	Spike mg/l	MS mg/l	MS %	MSD mg/l	MSD %	RPD	Limits Rec/RPD
	TPH-GRO (C6-C10)	ND		0.4	0.402	101	0.380	95	6	75-129/13

CAS No.	Surrogate Recoveries	MS	MSD	F78009-37	Limits
460-00-4	4-Bromofluorobenzene	114%	104%	88%	57-129%
98-08-8	aaa-Trifluorotoluene	108%	105%	78%	58-120%

Matrix Spike/Matrix Spike Duplicate Summary

Job Number: F78009
Account: TETTNOAK Tetra Tech, Inc
Project: Holloman AFB; Alamogordo, NM

Sample	File ID	DF	Analyzed	By	Prep Date	Prep Batch	Analytical Batch
F78096-14MS	CD100657.D	1	11/19/10	WV	n/a	n/a	GCD4158
F78096-14MSD	CD100658.D	1	11/19/10	WV	n/a	n/a	GCD4158
F78096-14	CD100651.D	1	11/19/10	WV	n/a	n/a	GCD4158

The QC reported here applies to the following samples: **Method:** SW846 8015C

F78009-38, F78009-39

CAS No.	Compound	F78096-14 mg/l	Q	Spike mg/l	MS mg/l	MS %	MSD mg/l	MSD %	RPD	Limits Rec/RPD
	TPH-GRO (C6-C10)	0.0597	J	0.4	0.406	87	0.397	84	2	75-129/13

CAS No.	Surrogate Recoveries	MS	MSD	F78096-14	Limits
460-00-4	4-Bromofluorobenzene	111%	115%	87%	57-129%
98-08-8	aaa-Trifluorotoluene	99% [a]	99% [a]		58-120%
98-08-8	aaa-Trifluorotoluene	160%* [b]	154%* [b]	91%	58-120%

(a) Result reported from PID.
(b) Outside control limits due to matrix interference.

Matrix Spike/Matrix Spike Duplicate Summary

Job Number: F78009
Account: TETTNOAK Tetra Tech, Inc
Project: Holloman AFB; Alamogordo, NM

Sample	File ID	DF	Analyzed	By	Prep Date	Prep Batch	Analytical Batch
F78002-2MS	QR056873.D	1	11/19/10	AH	n/a	n/a	GQR2473
F78002-2MSD	QR056874.D	1	11/19/10	AH	n/a	n/a	GQR2473
F78002-2	QR056850.D	1	11/19/10	AH	n/a	n/a	GQR2473

The QC reported here applies to the following samples: **Method:** SW846 8015C

F78009-1, F78009-2, F78009-3, F78009-4, F78009-5, F78009-6, F78009-7, F78009-8, F78009-9, F78009-10

CAS No.	Compound	F78002-2 mg/kg	Q	Spike mg/kg	MS mg/kg	MS %	MSD mg/kg	MSD %	RPD	Limits Rec/RPD
	TPH-GRO (C6-C10)	4.9	U	19.7	17.1	87	18.3	93	7	74-121/17

CAS No.	Surrogate Recoveries	MS	MSD	F78002-2	Limits
460-00-4	4-Bromofluorobenzene	94%	93%	78%	56-136%
98-08-8	aaa-Trifluorotoluene	95%	95%	71%	61-121%

Matrix Spike/Matrix Spike Duplicate Summary

Job Number: F78009
Account: TETTNOAK Tetra Tech, Inc
Project: Holloman AFB; Alamogordo, NM

Sample	File ID	DF	Analyzed	By	Prep Date	Prep Batch	Analytical Batch
F78009-24MS	QR056905.D	1	11/20/10	AH	n/a	n/a	GQR2474
F78009-24MSD	QR056906.D	1	11/20/10	AH	n/a	n/a	GQR2474
F78009-24	QR056896.D	1	11/20/10	AH	n/a	n/a	GQR2474

The QC reported here applies to the following samples: **Method:** SW846 8015C

F78009-11, F78009-12, F78009-13, F78009-14, F78009-15, F78009-16, F78009-17, F78009-18, F78009-19, F78009-20, F78009-21, F78009-22, F78009-23, F78009-24, F78009-26, F78009-27, F78009-28, F78009-29, F78009-30

CAS No.	Compound	F78009-24 mg/kg	Q	Spike mg/kg	MS mg/kg	MS %	MSD mg/kg	MSD %	RPD	Limits Rec/RPD
	TPH-GRO (C6-C10)	ND		18	15.3	85	15.6	87	2	74-121/17

CAS No.	Surrogate Recoveries	MS	MSD	F78009-24	Limits
460-00-4	4-Bromofluorobenzene	84%	73%	81%	56-136%
98-08-8	aaa-Trifluorotoluene	90%	78%	75%	61-121%

Matrix Spike/Matrix Spike Duplicate Summary

Job Number: F78009
Account: TETTNOAK Tetra Tech, Inc
Project: Holloman AFB; Alamogordo, NM

Sample	File ID	DF	Analyzed	By	Prep Date	Prep Batch	Analytical Batch
F78009-31MS	QR056937.D	1	11/21/10	AH	n/a	n/a	GQR2475
F78009-31MSD	QR056938.D	1	11/21/10	AH	n/a	n/a	GQR2475
F78009-31	QR056913.D	1	11/20/10	AH	n/a	n/a	GQR2475

The QC reported here applies to the following samples: **Method:** SW846 8015C

F78009-31, F78009-32, F78009-33, F78009-34, F78009-35

CAS No.	Compound	F78009-31 mg/kg	Q	Spike mg/kg	MS mg/kg	MS %	MSD mg/kg	MSD %	RPD	Limits Rec/RPD
	TPH-GRO (C6-C10)	ND		18.2	16.5	91	16.3	89	1	74-121/17

CAS No.	Surrogate Recoveries	MS	MSD	F78009-31	Limits
460-00-4	4-Bromofluorobenzene	90%	92%	81%	56-136%
98-08-8	aaa-Trifluorotoluene	96%	97%	73%	61-121%

Matrix Spike/Matrix Spike Duplicate Summary

Job Number: F78009
Account: TETTNOAK Tetra Tech, Inc
Project: Holloman AFB; Alamogordo, NM

Sample	File ID	DF	Analyzed	By	Prep Date	Prep Batch	Analytical Batch
F78084-11MS	QR056972.D	1	11/23/10	AH	n/a	n/a	GQR2476
F78084-11MSD	QR056973.D	1	11/23/10	AH	n/a	n/a	GQR2476
F78084-11	QR056967.D	1	11/22/10	AH	n/a	n/a	GQR2476

The QC reported here applies to the following samples: **Method:** SW846 8015C

F78009-25

CAS No.	Compound	F78084-11 mg/kg	Q	Spike mg/kg	MS mg/kg	MS %	MSD mg/kg	MSD %	RPD	Limits Rec/RPD
	TPH-GRO (C6-C10)	5.1	U	20.5	17.9	88	17.7	87	1	74-121/17

CAS No.	Surrogate Recoveries	MS	MSD	F78084-11	Limits
460-00-4	4-Bromofluorobenzene	88%	87%	86%	56-136%
98-08-8	aaa-Trifluorotoluene	89%	89%	73%	61-121%

Duplicate Summary

Job Number: F78009
Account: TETTNOAK Tetra Tech, Inc
Project: Holloman AFB; Alamogordo, NM

Sample	File ID	DF	Analyzed	By	Prep Date	Prep Batch	Analytical Batch
F78096-1DUP	CD100656.D	5	11/19/10	WV	n/a	n/a	GCD4158
F78096-1	CD100655.D	5	11/19/10	WV	n/a	n/a	GCD4158

The QC reported here applies to the following samples: **Method:** SW846 8015C

F78009-38, F78009-39

CAS No.	Compound	F78096-1 mg/l	Q	DUP mg/l	Q	RPD	Limits
	TPH-GRO (C6-C10)	3.04		3.11		2	13

CAS No.	Surrogate Recoveries	DUP	F78096-1	Limits
460-00-4	4-Bromofluorobenzene	104%	109%	57-129%
98-08-8	aaa-Trifluorotoluene	106%	100%	58-120%

Volatile Surrogate Recovery Summary

Job Number: F78009
Account: TETTNOAK Tetra Tech, Inc
Project: Holloman AFB; Alamogordo, NM

Method: SW846 8015C **Matrix:** AQ

Samples and QC shown here apply to the above method

Lab Sample ID	Lab File ID	S1 [a]	S2 [a]
F78009-36	CD100614.D	107.0	97.0
F78009-37	CD100593.D	88.0	78.0
F78009-38	CD100633.D	97.0	86.0
F78009-39	CD100634.D	91.0	83.0
F78009-37MS	CD100612.D	114.0	108.0
F78009-37MSD	CD100613.D	104.0	105.0
F78096-14MS	CD100657.D	111.0	160.0* [b]
F78096-14MSD	CD100658.D	115.0	154.0* [b]
F78096-1DUP	CD100656.D	104.0	106.0
GCD4156-BS	CD100581.D	108.0	118.0
GCD4156-MB	CD100582.D	87.0	81.0
GCD4158-BS	CD100631.D	114.0	108.0
GCD4158-MB	CD100632.D	91.0	82.0

Surrogate Compounds	Recovery Limits
S1 = 4-Bromofluorobenzene	57-129%
S2 = aaa-Trifluorotoluene	58-120%

(a) Recovery from GC signal #2
(b) Outside control limits due to matrix interference.

Volatile Surrogate Recovery Summary

Job Number: F78009
Account: TETTNOAK Tetra Tech, Inc
Project: Holloman AFB; Alamogordo, NM

Method: SW846 8015C **Matrix:** SO

Samples and QC shown here apply to the above method

Lab Sample ID	Lab File ID	S1 [a]	S2 [b]	S2 [a]
F78009-1	QR056861.D	79.0		72.0
F78009-2	QR056862.D	81.0		72.0
F78009-3	QR056863.D	82.0		72.0
F78009-4	QR056864.D	81.0		74.0
F78009-5	QR056865.D	80.0		74.0
F78009-6	QR056866.D	83.0		73.0
F78009-7	QR056867.D	84.0		76.0
F78009-8	QR056870.D	79.0		71.0
F78009-9	QR056871.D	84.0		74.0
F78009-10	QR056872.D	80.0		74.0
F78009-11	QR056881.D	77.0		70.0
F78009-12	QR056882.D	80.0	81.0	
F78009-13	QR056883.D	78.0		71.0
F78009-14	QR056884.D	83.0		73.0
F78009-15	QR056885.D	79.0		71.0
F78009-16	QR056886.D	79.0		71.0
F78009-17	QR056887.D	79.0		71.0
F78009-18	QR056888.D	81.0		73.0
F78009-19	QR056891.D	82.0		75.0
F78009-20	QR056892.D	77.0		69.0
F78009-21	QR056893.D	78.0		71.0
F78009-22	QR056894.D	84.0		77.0
F78009-23	QR056895.D	81.0		71.0
F78009-24	QR056896.D	81.0		75.0
F78009-25	QR056948.D	79.0		73.0
F78009-26	QR056898.D	79.0		74.0
F78009-27	QR056899.D	81.0		74.0
F78009-28	QR056902.D	81.0		75.0
F78009-29	QR056903.D	81.0		73.0
F78009-30	QR056904.D	81.0		75.0
F78009-31	QR056913.D	81.0		73.0
F78009-32	QR056914.D	81.0		72.0
F78009-33	QR056915.D	80.0		72.0
F78009-34	QR056916.D	81.0		71.0
F78009-35	QR056917.D	79.0		72.0
F78002-2MS	QR056873.D	94.0		95.0
F78002-2MSD	QR056874.D	93.0		95.0
F78009-24MS	QR056905.D	84.0		90.0
F78009-24MSD	QR056906.D	73.0		78.0
F78009-31MS	QR056937.D	90.0		96.0

Volatile Surrogate Recovery Summary

Job Number: F78009
Account: TETTNOAK Tetra Tech, Inc
Project: Holloman AFB; Alamogordo, NM

Method: SW846 8015C **Matrix:** SO

Samples and QC shown here apply to the above method

Lab Sample ID	Lab File ID	S1 [a]	S2 [b]	S2 [a]
F78009-31MSD	QR056938.D	92.0		97.0
F78084-11MS	QR056972.D	88.0		89.0
F78084-11MSD	QR056973.D	87.0		89.0
GQR2473-BS	QR056847.D	87.0		90.0
GQR2473-MB	QR056848.D	77.0		69.0
GQR2474-BS	QR056879.D	87.0		89.0
GQR2474-MB	QR056880.D	76.0		67.0
GQR2475-BS	QR056911.D	82.0		85.0
GQR2475-MB	QR056912.D	74.0		65.0
GQR2476-BS	QR056946.D	93.0		94.0
GQR2476-MB	QR056947.D	76.0		66.0

Surrogate Compounds	Recovery Limits
S1 = 4-Bromofluorobenzene	56-136%
S2 = aaa-Trifluorotoluene	61-121%

(a) Recovery from GC signal #2
(b) Recovery from GC signal #1

GC Surrogate Retention Time Summary

Job Number: F78009
Account: TETTNOAK Tetra Tech, Inc
Project: Holloman AFB; Alamogordo, NM

Check Std:	GCD4156-CC3992	**Injection Date:**	11/18/10
Lab File ID:	CD100580.D	**Injection Time:**	00:44
Instrument ID:	GCCD	**Method:**	SW846 8015C

	S1 [a] RT	S2 [a] RT
Check Std	11.91	7.49

Lab Sample ID	Lab File ID	Date Analyzed	Time Analyzed	S1 [a] RT	S2 [a] RT
GCD4156-BS	CD100581.D	11/18/10	01:08	11.91	7.49
GCD4156-MB	CD100582.D	11/18/10	01:33	11.91	7.49
ZZZZZZ	CD100583.D	11/18/10	01:57	11.91	7.49
F77980-2	CD100584.D	11/18/10	02:21	11.91	7.49
ZZZZZZ	CD100585.D	11/18/10	02:45	11.91	7.49
ZZZZZZ	CD100586.D	11/18/10	03:09	11.91	7.49

Surrogate Compounds

S1 = 4-Bromofluorobenzene
S2 = aaa-Trifluorotoluene

(a) Retention time from GC signal #2

GC Surrogate Retention Time Summary

Job Number: F78009
Account: TETTNOAK Tetra Tech, Inc
Project: Holloman AFB; Alamogordo, NM

Check Std:	GCD4156-CC3992	**Injection Date:**	11/18/10
Lab File ID:	CD100591.D	**Injection Time:**	05:09
Instrument ID:	GCCD	**Method:**	SW846 8015C

	S1 [a] RT	S1 [b] RT	S2 [a] RT	S2 [b] RT
Check Std	11.91	11.91	7.49	7.49

Lab Sample ID	Lab File ID	Date Analyzed	Time Analyzed	S1 [a] RT	S1 [b] RT	S2 [a] RT	S2 [b] RT
F78009-37	CD100593.D	11/18/10	05:58		11.91		7.49
ZZZZZZ	CD100594.D	11/18/10	06:22		11.91		7.49
ZZZZZZ	CD100595.D	11/18/10	06:46		11.91		7.49
ZZZZZZ	CD100596.D	11/18/10	07:10		11.91		7.49
ZZZZZZ	CD100597.D	11/18/10	07:34		11.91		7.48
ZZZZZZ	CD100598.D	11/18/10	07:58		11.91		7.49
F78096-17	CD100599.D	11/18/10	08:23		11.91		7.50
F78096-17MS	CD100600.D	11/18/10	08:47		11.91		7.49
F78096-17MSD	CD100601.D	11/18/10	09:11		11.91		7.49
GCD4156-RT	CD100602.D	11/18/10	09:36	11.91	11.91	7.49	7.49

Surrogate Compounds

S1 = 4-Bromofluorobenzene
S2 = aaa-Trifluorotoluene

(a) Retention time from GC signal #1
(b) Retention time from GC signal #2

GC Surrogate Retention Time Summary

Job Number: F78009
Account: TETTNOAK Tetra Tech, Inc
Project: Holloman AFB; Alamogordo, NM

Check Std:	GCD4156-CC3992	**Injection Date:**	11/18/10
Lab File ID:	CD100603.D	**Injection Time:**	10:01
Instrument ID:	GCCD	**Method:**	SW846 8015C

	S1 [a] RT	S1 [b] RT	S2 [a] RT	S2 [b] RT
Check Std	11.91	11.91	7.49	7.49

Lab Sample ID	Lab File ID	Date Analyzed	Time Analyzed	S1 [a] RT	S1 [b] RT	S2 [a] RT	S2 [b] RT
ZZZZZZ	CD100607.D	11/18/10	11:38		11.91		7.49
ZZZZZZ	CD100608.D	11/18/10	12:02		11.91		7.49
ZZZZZZ	CD100609.D	11/18/10	12:27		11.91		7.49
F77980-2MS	CD100610.D	11/18/10	12:51		11.91		7.49
F77980-2MSD	CD100611.D	11/18/10	13:16		11.91		7.49
F78009-37MS	CD100612.D	11/18/10	13:40		11.91		7.49
F78009-37MSD	CD100613.D	11/18/10	14:05		11.91		7.49
F78009-36	CD100614.D	11/18/10	14:29		11.91		7.49
GCD4156-ECC3992	CD100615.D	11/18/10	14:53	11.91	11.92	7.49	7.49

Surrogate Compounds

S1 = 4-Bromofluorobenzene
S2 = aaa-Trifluorotoluene

(a) Retention time from GC signal #1
(b) Retention time from GC signal #2

GC Surrogate Retention Time Summary

Job Number: F78009
Account: TETTNOAK Tetra Tech, Inc
Project: Holloman AFB; Alamogordo, NM

Check Std:	GCD4158-CC3992	**Injection Date:**	11/19/10
Lab File ID:	CD100630.D	**Injection Time:**	09:50
Instrument ID:	GCCD	**Method:**	SW846 8015C

	S1 [a] RT	S2 [b] RT	S2 [a] RT
Check Std	11.91	7.49	7.49

Lab Sample ID	Lab File ID	Date Analyzed	Time Analyzed	S1 [a] RT	S2 [b] RT	S2 [a] RT
GCD4158-BS	CD100631.D	11/19/10	10:14	11.91		7.49
GCD4158-MB	CD100632.D	11/19/10	10:38	11.91		7.49
F78009-38	CD100633.D	11/19/10	11:13	11.91		7.49
F78009-39	CD100634.D	11/19/10	11:37	11.91		7.49
ZZZZZZ	CD100635.D	11/19/10	12:01	11.91		7.50
ZZZZZZ	CD100636.D	11/19/10	12:25	11.91		7.49
ZZZZZZ	CD100637.D	11/19/10	12:49	11.91	7.49	7.50
F78125-2	CD100638.D	11/19/10	13:13	11.91		7.49
ZZZZZZ	CD100639.D	11/19/10	13:38	11.92		7.50
ZZZZZZ	CD100640.D	11/19/10	14:02	11.92		7.50

Surrogate Compounds

S1 = 4-Bromofluorobenzene
S2 = aaa-Trifluorotoluene

(a) Retention time from GC signal #2
(b) Retention time from GC signal #1

GC Surrogate Retention Time Summary

Job Number: F78009
Account: TETTNOAK Tetra Tech, Inc
Project: Holloman AFB; Alamogordo, NM

Check Std:	GCD4158-CC3992	**Injection Date:**	11/19/10
Lab File ID:	CD100653.D	**Injection Time:**	19:22
Instrument ID:	GCCD	**Method:**	SW846 8015C

	S1 [a] RT	S1 [b] RT	S2 [a] RT	S2 [b] RT
Check Std	11.92	11.92	7.50	7.50

Lab Sample ID	Lab File ID	Date Analyzed	Time Analyzed	S1 [a] RT	S1 [b] RT	S2 [a] RT	S2 [b] RT
F78096-1	CD100655.D	11/19/10	20:11		11.92		7.50
F78096-1DUP	CD100656.D	11/19/10	20:35		11.92		7.50
F78096-14MS	CD100657.D	11/19/10	20:59		11.92	7.50	7.50
F78096-14MSD	CD100658.D	11/19/10	21:23		11.92	7.50	7.50
ZZZZZZ	CD100660.D	11/19/10	22:12		11.92		7.50
ZZZZZZ	CD100661.D	11/19/10	22:36		11.92		7.50
GCD4158-ECC3992	CD100662.D	11/19/10	23:00	11.92	11.92	7.49	7.49

Surrogate Compounds

S1 = 4-Bromofluorobenzene
S2 = aaa-Trifluorotoluene

(a) Retention time from GC signal #1
(b) Retention time from GC signal #2

GC Surrogate Retention Time Summary

Job Number: F78009
Account: TETTNOAK Tetra Tech, Inc
Project: Holloman AFB; Alamogordo, NM

Check Std:	GQR2473-CC2471	**Injection Date:**	11/19/10
Lab File ID:	QR056846.D	**Injection Time:**	10:52
Instrument ID:	GCQR	**Method:**	SW846 8015C

	S1 [a] RT	S2 [a] RT
Check Std	14.97	9.52

Lab Sample ID	Lab File ID	Date Analyzed	Time Analyzed	S1 [a] RT	S2 [a] RT
GQR2473-BS	QR056847.D	11/19/10	11:18	14.97	9.52
GQR2473-MB	QR056848.D	11/19/10	11:45	14.96	9.53
ZZZZZZ	QR056849.D	11/19/10	12:12	14.97	9.52
F78002-2	QR056850.D	11/19/10	12:39	14.97	9.52
ZZZZZZ	QR056851.D	11/19/10	13:05	14.98	9.52
ZZZZZZ	QR056852.D	11/19/10	13:32	14.97	9.52
ZZZZZZ	QR056853.D	11/19/10	13:58	14.97	9.52
ZZZZZZ	QR056854.D	11/19/10	14:25	14.97	9.52
ZZZZZZ	QR056855.D	11/19/10	14:51	14.97	9.52
ZZZZZZ	QR056856.D	11/19/10	15:18	14.97	9.52

Surrogate Compounds

S1 = 4-Bromofluorobenzene
S2 = aaa-Trifluorotoluene

(a) Retention time from GC signal #2

GC Surrogate Retention Time Summary

Job Number: F78009
Account: TETTNOAK Tetra Tech, Inc
Project: Holloman AFB; Alamogordo, NM

Check Std:	GQR2473-CC2471	**Injection Date:**	11/19/10
Lab File ID:	QR056857.D	**Injection Time:**	15:44
Instrument ID:	GCQR	**Method:**	SW846 8015C

	S1 [a] RT	S2 [a] RT
Check Std	14.97	9.52

Lab Sample ID	Lab File ID	Date Analyzed	Time Analyzed	S1 [a] RT	S2 [a] RT
ZZZZZZ	QR056859.D	11/19/10	16:37	14.97	9.52
ZZZZZZ	QR056860.D	11/19/10	17:04	14.97	9.51
F78009-1	QR056861.D	11/19/10	17:30	14.97	9.51
F78009-2	QR056862.D	11/19/10	17:57	14.97	9.52
F78009-3	QR056863.D	11/19/10	18:24	14.97	9.51
F78009-4	QR056864.D	11/19/10	18:50	14.96	9.51
F78009-5	QR056865.D	11/19/10	19:17	14.96	9.51
F78009-6	QR056866.D	11/19/10	19:44	14.96	9.51
F78009-7	QR056867.D	11/19/10	20:10	14.96	9.51

Surrogate Compounds

S1 = 4-Bromofluorobenzene
S2 = aaa-Trifluorotoluene

(a) Retention time from GC signal #2

GC Surrogate Retention Time Summary

Job Number: F78009
Account: TETTNOAK Tetra Tech, Inc
Project: Holloman AFB; Alamogordo, NM

Check Std:	GQR2473-CC2471	**Injection Date:**	11/19/10
Lab File ID:	QR056868.D	**Injection Time:**	20:37
Instrument ID:	GCQR	**Method:**	SW846 8015C

	S1 [a] RT	S1 [b] RT	S2 [a] RT	S2 [b] RT
Check Std	14.96	14.96	9.51	9.51

Lab Sample ID	Lab File ID	Date Analyzed	Time Analyzed	S1 [a] RT	S1 [b] RT	S2 [a] RT	S2 [b] RT
F78009-8	QR056870.D	11/19/10	21:31		14.96		9.51
F78009-9	QR056871.D	11/19/10	21:58		14.97		9.51
F78009-10	QR056872.D	11/19/10	22:24		14.96		9.51
F78002-2MS	QR056873.D	11/19/10	22:51		14.96		9.51
F78002-2MSD	QR056874.D	11/19/10	23:18		14.96		9.51
GQR2473-ECC2470	QR056875.D	11/19/10	23:45	14.96	14.96	9.51	9.51

Surrogate Compounds

S1 = 4-Bromofluorobenzene
S2 = aaa-Trifluorotoluene

(a) Retention time from GC signal #1
(b) Retention time from GC signal #2

GC Surrogate Retention Time Summary

Job Number: F78009
Account: TETTNOAK Tetra Tech, Inc
Project: Holloman AFB; Alamogordo, NM

Check Std:	GQR2474-CC2471	**Injection Date:**	11/20/10
Lab File ID:	QR056878.D	**Injection Time:**	01:06
Instrument ID:	GCQR	**Method:**	SW846 8015C

	S1 [a] RT	S2 [b] RT	S2 [a] RT
Check Std	14.96	9.51	9.51

Lab Sample ID	Lab File ID	Date Analyzed	Time Analyzed	S1 [a] RT	S2 [b] RT	S2 [a] RT
GQR2474-BS	QR056879.D	11/20/10	01:32	14.96		9.51
GQR2474-MB	QR056880.D	11/20/10	01:59	14.96		9.51
F78009-11	QR056881.D	11/20/10	02:26	14.96		9.51
F78009-12	QR056882.D	11/20/10	02:53	14.96	9.51	
F78009-13	QR056883.D	11/20/10	03:19	14.96		9.51
F78009-14	QR056884.D	11/20/10	03:46	14.96		9.51
F78009-15	QR056885.D	11/20/10	04:13	14.96		9.51
F78009-16	QR056886.D	11/20/10	04:40	14.96		9.51
F78009-17	QR056887.D	11/20/10	05:07	14.96		9.51
F78009-18	QR056888.D	11/20/10	05:34	14.96		9.51

Surrogate Compounds

S1 = 4-Bromofluorobenzene
S2 = aaa-Trifluorotoluene

(a) Retention time from GC signal #2
(b) Retention time from GC signal #1

GC Surrogate Retention Time Summary

Job Number: F78009
Account: TETTNOAK Tetra Tech, Inc
Project: Holloman AFB; Alamogordo, NM

Check Std:	GQR2474-CC2471	**Injection Date:**	11/20/10
Lab File ID:	QR056889.D	**Injection Time:**	06:01
Instrument ID:	GCQR	**Method:**	SW846 8015C

	S1 [a] RT	S2 [a] RT
Check Std	14.96	9.51

Lab Sample ID	Lab File ID	Date Analyzed	Time Analyzed	S1 [a] RT	S2 [a] RT
F78009-19	QR056891.D	11/20/10	06:54	14.96	9.51
F78009-20	QR056892.D	11/20/10	07:21	14.96	9.51
F78009-21	QR056893.D	11/20/10	07:48	14.96	9.51
F78009-22	QR056894.D	11/20/10	08:14	14.96	9.51
F78009-23	QR056895.D	11/20/10	08:41	14.97	9.52
F78009-24	QR056896.D	11/20/10	09:08	14.97	9.52
F78009-26	QR056898.D	11/20/10	10:01	14.97	9.52
F78009-27	QR056899.D	11/20/10	10:28	14.97	9.52

Surrogate Compounds

S1 = 4-Bromofluorobenzene
S2 = aaa-Trifluorotoluene

(a) Retention time from GC signal #2

GC Surrogate Retention Time Summary

Job Number: F78009
Account: TETTNOAK Tetra Tech, Inc
Project: Holloman AFB; Alamogordo, NM

Check Std:	GQR2474-CC2471	**Injection Date:**	11/20/10
Lab File ID:	QR056900.D	**Injection Time:**	10:54
Instrument ID:	GCQR	**Method:**	SW846 8015C

	S1 [a] RT	S1 [b] RT	S2 [a] RT	S2 [b] RT
Check Std	14.97	14.97	9.52	9.52

Lab Sample ID	Lab File ID	Date Analyzed	Time Analyzed	S1 [a] RT	S1 [b] RT	S2 [a] RT	S2 [b] RT
F78009-28	QR056902.D	11/20/10	11:47		14.97		9.51
F78009-29	QR056903.D	11/20/10	12:14		14.97		9.52
F78009-30	QR056904.D	11/20/10	12:41		14.96		9.51
F78009-24MS	QR056905.D	11/20/10	13:07		14.96		9.51
F78009-24MSD	QR056906.D	11/20/10	13:34		14.96		9.51
GQR2474-ECC2470	QR056907.D	11/20/10	14:00	14.97	14.97	9.52	9.52

Surrogate Compounds

S1 = 4-Bromofluorobenzene
S2 = aaa-Trifluorotoluene

(a) Retention time from GC signal #1
(b) Retention time from GC signal #2

GC Surrogate Retention Time Summary

Job Number: F78009
Account: TETTNOAK Tetra Tech, Inc
Project: Holloman AFB; Alamogordo, NM

Check Std:	GQR2475-CC2471	**Injection Date:**	11/20/10
Lab File ID:	QR056910.D	**Injection Time:**	15:20
Instrument ID:	GCQR	**Method:**	SW846 8015C

	S1 [a] RT	S2 [a] RT
Check Std	14.96	9.51

Lab Sample ID	Lab File ID	Date Analyzed	Time Analyzed	S1 [a] RT	S2 [a] RT
GQR2475-BS	QR056911.D	11/20/10	15:47	14.97	9.52
GQR2475-MB	QR056912.D	11/20/10	16:13	14.97	9.52
F78009-31	QR056913.D	11/20/10	16:40	14.97	9.52
F78009-32	QR056914.D	11/20/10	17:07	14.97	9.52
F78009-33	QR056915.D	11/20/10	17:34	14.97	9.51
F78009-34	QR056916.D	11/20/10	18:00	14.97	9.51
F78009-35	QR056917.D	11/20/10	18:27	14.96	9.51
ZZZZZZ	QR056918.D	11/20/10	18:54	14.96	9.51
ZZZZZZ	QR056919.D	11/20/10	19:20	14.96	9.51

Surrogate Compounds

S1 = 4-Bromofluorobenzene
S2 = aaa-Trifluorotoluene

(a) Retention time from GC signal #2

GC Surrogate Retention Time Summary

Job Number: F78009
Account: TETTNOAK Tetra Tech, Inc
Project: Holloman AFB; Alamogordo, NM

Check Std:	GQR2475-CC2471	**Injection Date:**	11/21/10
Lab File ID:	QR056932.D	**Injection Time:**	01:07
Instrument ID:	GCQR	**Method:**	SW846 8015C

	S1 [a] RT	S1 [b] RT	S2 [a] RT	S2 [b] RT
Check Std	14.96	14.96	9.51	9.51

Lab Sample ID	Lab File ID	Date Analyzed	Time Analyzed	S1 [a] RT	S1 [b] RT	S2 [a] RT	S2 [b] RT
ZZZZZZ	QR056934.D	11/21/10	02:00		14.96		9.51
ZZZZZZ	QR056935.D	11/21/10	02:26		14.96		9.51
ZZZZZZ	QR056936.D	11/21/10	02:53		14.96		9.51
F78009-31MS	QR056937.D	11/21/10	03:20		14.96		9.51
F78009-31MSD	QR056938.D	11/21/10	03:46		14.96		9.51
GQR2475-ECC2470	QR056939.D	11/21/10	04:13	14.96	14.96	9.51	9.51

Surrogate Compounds

S1 = 4-Bromofluorobenzene
S2 = aaa-Trifluorotoluene

(a) Retention time from GC signal #1
(b) Retention time from GC signal #2

GC Surrogate Retention Time Summary

Job Number: F78009
Account: TETTNOAK Tetra Tech, Inc
Project: Holloman AFB; Alamogordo, NM

Check Std:	GQR2476-CC2471	**Injection Date:**	11/22/10
Lab File ID:	QR056943.D	**Injection Time:**	11:21
Instrument ID:	GCQR	**Method:**	SW846 8015C

	S1 [a] RT	S2 [a] RT
Check Std	14.96	9.51

Lab Sample ID	Lab File ID	Date Analyzed	Time Analyzed	S1 [a] RT	S2 [a] RT
GQR2476-BS	QR056946.D	11/22/10	13:36	14.96	9.51
GQR2476-MB	QR056947.D	11/22/10	14:02	14.96	9.52
F78009-25	QR056948.D	11/22/10	14:43	14.97	9.52
ZZZZZZ	QR056949.D	11/22/10	15:09	14.96	9.52
ZZZZZZ	QR056950.D	11/22/10	15:36	14.96	9.51
ZZZZZZ	QR056951.D	11/22/10	16:03	14.97	9.52
ZZZZZZ	QR056952.D	11/22/10	16:30	14.96	9.51

Surrogate Compounds

S1 = 4-Bromofluorobenzene
S2 = aaa-Trifluorotoluene

(a) Retention time from GC signal #2

GC Surrogate Retention Time Summary

Job Number: F78009
Account: TETTNOAK Tetra Tech, Inc
Project: Holloman AFB; Alamogordo, NM

Check Std:	GQR2476-CC2471	**Injection Date:**	11/22/10
Lab File ID:	QR056964.D	**Injection Time:**	21:49
Instrument ID:	GCQR	**Method:**	SW846 8015C

	S1 [a] RT	S1 [b] RT	S2 [a] RT	S2 [b] RT
Check Std	14.96	14.96	9.51	9.51

Lab Sample ID	Lab File ID	Date Analyzed	Time Analyzed	S1 [a] RT	S1 [b] RT	S2 [a] RT	S2 [b] RT
ZZZZZZ	QR056966.D	11/22/10	22:42		14.96		9.51
F78084-11	QR056967.D	11/22/10	23:09		14.96		9.51
ZZZZZZ	QR056968.D	11/22/10	23:36		14.96		9.51
ZZZZZZ	QR056969.D	11/23/10	00:03		14.96		9.51
ZZZZZZ	QR056970.D	11/23/10	00:29		14.96		9.51
ZZZZZZ	QR056971.D	11/23/10	00:56		14.96		9.51
F78084-11MS	QR056972.D	11/23/10	01:23		14.96		9.51
F78084-11MSD	QR056973.D	11/23/10	01:49		14.96		9.51
GQR2476-ECC2470	QR056974.D	11/23/10	02:16	14.96	14.96	9.51	9.51

Surrogate Compounds

S1 = 4-Bromofluorobenzene
S2 = aaa-Trifluorotoluene

(a) Retention time from GC signal #1
(b) Retention time from GC signal #2

Initial Calibration Summary

Job Number: F78009
Account: TETTNOAK Tetra Tech, Inc
Project: Holloman AFB; Alamogordo, NM

Sample: GCD3992-ICC3992
Lab FileID: CD095362.D

```
                         Response Factor Report  VOA2

  Method       : C:\HPCHEM\1\METHODS\GROW-CD.M (Chemstation Integrator)
  Title        : EPA 8015B/TPHGRO by GC-PID/FID
  Last Update  : Tue Jun 22 09:01:24 2010
  Response via : Initial Calibration

  Calibration Files
  1   =CD095360.D  2   =CD095361.D  3   =CD095362.D  4   =CD095363.D
  5      =CD095364.D   6      =CD095365.D

        Compound              1     2     3     4     5     6     Avg    %RSD
  ---------------------------------------------------------------------------
  1) S   a,a,a-TFT           1.665 1.691 1.790 1.882 2.007 1.963 1.833 E3   7.72
  2) S   BFB                 4.724 4.823 5.281 5.635 5.975 5.785 5.371 E3   9.61

Signal #2

  4) S   a,a,a-TFT #2        5.089 5.539 5.206 5.742 6.361 6.451 5.731 E4   9.99
  5) S   BFB #2              2.803 2.942 3.061 3.359 3.458 3.463 3.181 E4   8.92
  6) H   TPH-GRO (C6-C10)    5.018 4.322 4.196 4.350 4.486 4.408 4.463 E4   6.46
             ---- Linear regression ----  Coefficient =  0.9986
               Response Ratio = -62816.61522 + 44158.76720 *A

 ---------------------------------------------------------------------------
 (#) = Out of Range

           GROW-CD.M         Mon Jun 28 15:03:00 2010
```

7.7.1

7

Initial Calibration Verification

Job Number: F78009
Account: TETTNOAK Tetra Tech, Inc
Project: Holloman AFB; Alamogordo, NM

Sample: GCD3992-ICV3992
Lab FileID: CD095367.D

```
                    Evaluate Continuing Calibration Report

 Signal #1 : C:\HPCHEM\1\DATA\060310\CD095367.D\FID1B.CH  Vial: 12
 Signal #2 : C:\HPCHEM\1\DATA\060310\CD095367.D\FID2A.CH
 Acq On    :  3 Jun 2010   2:52 pm                    Operator: Wilfredo
 Sample    : icv3992-3                                Inst    : VOA2
 Misc      : gc11035,gcd3992,,,,,                     Multiplr: 1.00
 IntFile Signal #1: PID.E        IntFile Signal #2: events2.e

 Method       : C:\HPCHEM\1\METHODS\GROW-CD.M (Chemstation Integrator)
 Title        : EPA 8015B/TPHGRO by GC-PID/FID
 Last Update  : Tue Jun 22 09:01:24 2010
 Response via : Multiple Level Calibration

 Min. RRF     :   0.000  Min. Rel. Area :  50%  Max. R.T. Dev  0.10min
 Max. RRF Dev :  15%     Max. Rel. Area : 150%

        Compound                Amount  Calc.    %Drift Area% Dev(min)RT Window
 ---------------------------------------------------------------------------
 1 S   a,a,a-TFT               20.000  20.391     -2.0  104  -0.05    7.46- 7.66
 2 S   BFB                     20.000  20.818     -4.1  106  -0.04   11.88-12.08

*****  Signal #2   *****

 4 S   a,a,a-TFT #2            20.000  20.263     -1.3  112  -0.05    7.46- 7.66
 5 S   BFB #2                  20.000  21.080     -5.4  110  -0.04   11.88-12.08
 6 H   TPH-GRO (C6-C10)       400.000 359.411     10.1   94  -0.06    4.05-13.39
---------------------------------------------------------------------------
---------------------------------------------------------------------------

   (#) = Out of Range              SPCC's out = 0  CCC's out = 0
    CD095362.D GROW-CD.M        Mon Jun 28 15:03:10 2010
```

7.7.2

7

Continuing Calibration Summary

Job Number: F78009
Account: TETTNOAK Tetra Tech, Inc
Project: Holloman AFB; Alamogordo, NM

Sample: GCD4156-CC3992
Lab FileID: CD100580.D

```
                    Evaluate Continuing Calibration Report

 Signal #1 : C:\HPCHEM\1\DATA\111710\CD100580.D\FID1B.CH  Vial: 35
 Signal #2 : C:\HPCHEM\1\DATA\111710\CD100580.D\FID2A.CH
 Acq On    : 18 Nov 2010  12:44 am                    Operator: Wilfredo
 Sample    : cc3992-4                                 Inst    : VOA2
 Misc      : gc11621,gcd4156,,,,,                     Multiplr: 1.00
 IntFile Signal #1: PID.E        IntFile Signal #2: events2.e

 Method       : C:\HPCHEM\1\METHODS\GROW-CD.M (Chemstation Integrator)
 Title        : EPA 8015B/TPHGRO by GC-PID/FID
 Last Update  : Thu Nov 11 08:21:51 2010
 Response via : Multiple Level Calibration

 Min. RRF     :   0.000  Min. Rel. Area :  50%  Max. R.T. Dev  0.10min
 Max. RRF Dev :  20%     Max. Rel. Area : 150%

        Compound                Amount  Calc.    %Drift Area% Dev(min)RT Window
 ---------------------------------------------------------------------------
 1 S   a,a,a-TFT               20.000  18.659      6.7   91   0.00    7.40- 7.60
 2 S   BFB                     20.000  19.106      4.5   91   0.00   11.81-12.01

*****  Signal #2   *****

 4 S   a,a,a-TFT #2            20.000  22.682    -13.4  113  -0.01    7.40- 7.60
 5 S   BFB #2                  20.000  21.460     -7.3  102   0.00   11.81-12.01
 6 H   TPH-GRO (C6-C10)       600.000 593.973      1.0  100   0.00    3.98-13.44
---------------------------------------------------------------------------
---------------------------------------------------------------------------

   (#) = Out of Range              SPCC's out = 0  CCC's out = 0
    CD095363.D GROW-CD.M        Thu Nov 18 13:47:36 2010
```

7.7.3

7

Continuing Calibration Summary

Job Number: F78009
Account: TETTNOAK Tetra Tech, Inc
Project: Holloman AFB; Alamogordo, NM

Sample: GCD4156-CC3992
Lab FileID: CD100591.D

```
                    Evaluate Continuing Calibration Report

 Signal #1 : C:\HPCHEM\1\DATA\111710\CD100591.D\FID1B.CH  Vial: 46
 Signal #2 : C:\HPCHEM\1\DATA\111710\CD100591.D\FID2A.CH
 Acq On    : 18 Nov 2010   5:09 am                    Operator: Wilfredo
 Sample    : cc3992-3                                 Inst    : VOA2
 Misc      : gc11621,gcd4156,,,,,                     Multiplr: 1.00
 IntFile Signal #1: PID.E        IntFile Signal #2: events2.e

 Method       : C:\HPCHEM\1\METHODS\GROW-CD.M (Chemstation Integrator)
 Title        : EPA 8015B/TPHGRO by GC-PID/FID
 Last Update  : Thu Nov 11 08:21:51 2010
 Response via : Multiple Level Calibration

 Min. RRF     :   0.000  Min. Rel. Area :  50%  Max. R.T. Dev  0.10min
 Max. RRF Dev :  20%     Max. Rel. Area : 150%

        Compound                Amount  Calc.    %Drift Area% Dev(min)RT Window
 ---------------------------------------------------------------------------
 1 S   a,a,a-TFT               20.000  17.261     13.7   88   0.00    7.40- 7.60
 2 S   BFB                     20.000  17.706     11.5   90   0.00   11.81-12.01

*****  Signal #2   *****

 4 S   a,a,a-TFT #2            20.000  23.903    -19.5  132   0.00    7.40- 7.60
 5 S   BFB #2                  20.000  21.693     -8.5  113   0.00   11.81-12.01
 6 H   TPH-GRO (C6-C10)       400.000 396.531      0.9  104   0.00    3.98-13.44
---------------------------------------------------------------------------
---------------------------------------------------------------------------

   (#) = Out of Range              SPCC's out = 0  CCC's out = 0
    CD095362.D GROW-CD.M        Thu Nov 18 13:47:19 2010
```

7.7.4

7

Continuing Calibration Summary

Job Number: F78009
Account: TETTNOAK Tetra Tech, Inc
Project: Holloman AFB; Alamogordo, NM

Sample: GCD4156-CC3992
Lab FileID: CD100603.D

```
                    Evaluate Continuing Calibration Report

 Signal #1 : C:\HPCHEM\1\DATA\111710\CD100603.D\FID1B.CH  Vial: 6
 Signal #2 : C:\HPCHEM\1\DATA\111710\CD100603.D\FID2A.CH
 Acq On    : 18 Nov 2010  10:01 am                    Operator: Wilfredo
 Sample    : cc3992-3                                 Inst    : VOA2
 Misc      : gc11621,gcd4156,,,,,                     Multiplr: 1.00
 IntFile Signal #1: PID.E        IntFile Signal #2: events2.e

 Method       : C:\HPCHEM\1\METHODS\GROW-CD.M (Chemstation Integrator)
 Title        : EPA 8015B/TPHGRO by GC-PID/FID
 Last Update  : Thu Nov 11 08:21:51 2010
 Response via : Multiple Level Calibration

 Min. RRF     :   0.000  Min. Rel. Area :  50%  Max. R.T. Dev  0.10min
 Max. RRF Dev :  20%     Max. Rel. Area : 150%

        Compound                Amount  Calc.    %Drift Area% Dev(min)RT Window
 ---------------------------------------------------------------------------
 1 S   a,a,a-TFT               20.000  17.503     12.5   90   0.00    7.40- 7.60
 2 S   BFB                     20.000  17.716     11.4   90   0.00   11.81-12.01

*****  Signal #2   *****

 4 S   a,a,a-TFT #2            20.000  23.958    -19.8  132   0.00    7.40- 7.60
 5 S   BFB #2                  20.000  23.004    -15.0  120   0.00   11.81-12.01
 6 H   TPH-GRO (C6-C10)       400.000 386.715      3.3  101   0.00    3.98-13.44
---------------------------------------------------------------------------
---------------------------------------------------------------------------

   (#) = Out of Range              SPCC's out = 0  CCC's out = 0
    CD095362.D GROW-CD.M        Thu Nov 18 15:44:35 2010
```

7.7.5

7

Continuing Calibration Summary

Job Number: F78009
Account: TETTNOAK Tetra Tech, Inc
Project: Holloman AFB; Alamogordo, NM

Sample: GCD4156-ECC3992
Lab FileID: CD100615.D

```
                    Evaluate Continuing Calibration Report

 Signal #1 : C:\HPCHEM\1\DATA\111710\CD100615.D\FID1B.CH  Vial: 15
 Signal #2 : C:\HPCHEM\1\DATA\111710\CD100615.D\FID2A.CH
 Acq On    : 18 Nov 2010   2:53 pm                    Operator: Wilfredo
 Sample    : ecc3992-3                                Inst    : VOA2
 Misc      : gc11621,gcd4156,,,,,                     Multiplr: 1.00
 IntFile Signal #1: PID.E        IntFile Signal #2: events2.e

 Method       : C:\HPCHEM\1\METHODS\GROW-CD.M (Chemstation Integrator)
 Title        : EPA 8015B/TPHGRO by GC-PID/FID
 Last Update  : Thu Nov 11 08:21:51 2010
 Response via : Multiple Level Calibration

 Min. RRF     :   0.000  Min. Rel. Area :  50%  Max. R.T. Dev  0.10min
 Max. RRF Dev :  20%     Max. Rel. Area : 150%

        Compound                Amount  Calc.    %Drift Area% Dev(min)RT Window
 ---------------------------------------------------------------------------
 1 S   a,a,a-TFT               20.000  17.260     13.7   88   0.00    7.40- 7.60
 2 S   BFB                     20.000  17.315     13.4   88   0.00   11.81-12.01

*****  Signal #2   *****

 4 S   a,a,a-TFT #2            20.000  23.341    -16.7  128   0.00    7.40- 7.60
 5 S   BFB #2                  20.000  22.341    -11.7  116   0.00   11.81-12.01
 6 H   TPH-GRO (C6-C10)       400.000 376.117      6.0   99   0.00    3.98-13.44
---------------------------------------------------------------------------
---------------------------------------------------------------------------

   (#) = Out of Range              SPCC's out = 0  CCC's out = 0
    CD095362.D GROW-CD.M        Thu Nov 18 15:44:36 2010
```

7.7.6

7

Continuing Calibration Summary

Job Number: F78009
Account: TETTNOAK Tetra Tech, Inc
Project: Holloman AFB; Alamogordo, NM

Sample: GCD4158-CC3992
Lab FileID: CD100630.D

```
                    Evaluate Continuing Calibration Report

 Signal #1 : C:\HPCHEM\1\DATA\111910\CD100630.D\FID1B.CH  Vial: 3
 Signal #2 : C:\HPCHEM\1\DATA\111910\CD100630.D\FID2A.CH
 Acq On    : 19 Nov 2010   9:50 am                    Operator: Wilfredo
 Sample    : cc3992-4                                 Inst    : VOA2
 Misc      : gc11633,gcd4158,,,,,                     Multiplr: 1.00
 IntFile Signal #1: PID.E        IntFile Signal #2: events2.e

 Method       : C:\HPCHEM\1\METHODS\GROW-CD.M (Chemstation Integrator)
 Title        : EPA 8015B/TPHGRO by GC-PID/FID
 Last Update  : Thu Nov 11 08:21:51 2010
 Response via : Multiple Level Calibration

 Min. RRF     :   0.000  Min. Rel. Area :  50%  Max. R.T. Dev  0.10min
 Max. RRF Dev :  20%     Max. Rel. Area : 150%

        Compound                Amount  Calc.    %Drift Area% Dev(min)RT Window
 ---------------------------------------------------------------------------
 1 S   a,a,a-TFT               20.000  19.349      3.3   94   0.00    7.40- 7.60
 2 S   BFB                     20.000  20.535     -2.7   98   0.00   11.81-12.01

*****  Signal #2   *****

 4 S   a,a,a-TFT #2            20.000  22.799    -14.0  114   0.00    7.40- 7.60
 5 S   BFB #2                  20.000  22.571    -12.9  107   0.00   11.81-12.01
 6 H   TPH-GRO (C6-C10)       600.000 645.000     -7.5  109   0.00    3.98-13.44
-----------------------------------------------------------------------------
-----------------------------------------------------------------------------

   (#) = Out of Range              SPCC's out = 0  CCC's out = 0
    CD095363.D GROW-CD.M        Sat Nov 20 09:22:35 2010
```

7.2.7

7

Continuing Calibration Summary

Job Number: F78009
Account: TETTNOAK Tetra Tech, Inc
Project: Holloman AFB; Alamogordo, NM

Sample: GCD4158-CC3992
Lab FileID: CD100641.D

```
                    Evaluate Continuing Calibration Report

 Signal #1 : C:\HPCHEM\1\DATA\111910\CD100641.D\FID1B.CH  Vial: 14
 Signal #2 : C:\HPCHEM\1\DATA\111910\CD100641.D\FID2A.CH
 Acq On    : 19 Nov 2010   2:31 pm                    Operator: Wilfredo
 Sample    : cc3992-3                                 Inst    : VOA2
 Misc      : gc11633,gcd4158,,,,,                     Multiplr: 1.00
 IntFile Signal #1: PID.E        IntFile Signal #2: events2.e

 Method       : C:\HPCHEM\1\METHODS\GROW-CD.M (Chemstation Integrator)
 Title        : EPA 8015B/TPHGRO by GC-PID/FID
 Last Update  : Thu Nov 11 08:21:51 2010
 Response via : Multiple Level Calibration

 Min. RRF     :   0.000  Min. Rel. Area :  50%  Max. R.T. Dev  0.10min
 Max. RRF Dev :  20%     Max. Rel. Area : 150%

        Compound                Amount  Calc.    %Drift Area% Dev(min)RT Window
 ---------------------------------------------------------------------------
 1 S   a,a,a-TFT               20.000  16.553     17.2   85   0.00    7.40- 7.60
 2 S   BFB                     20.000  17.221     13.9   88   0.00   11.81-12.01

*****  Signal #2   *****

 4 S   a,a,a-TFT #2            20.000  22.759    -13.8  125   0.00    7.40- 7.60
 5 S   BFB #2                  20.000  22.249    -11.2  116   0.00   11.81-12.01
 6 H   TPH-GRO (C6-C10)       400.000 420.511     -5.1  110   0.00    3.98-13.44
---------------------------------------------------------------------------
---------------------------------------------------------------------------

   (#) = Out of Range              SPCC's out = 0  CCC's out = 0
    CD095362.D GROW-CD.M        Sat Nov 20 09:22:56 2010
```

7.7.8

7

Continuing Calibration Summary

Job Number: F78009
Account: TETTNOAK Tetra Tech, Inc
Project: Holloman AFB; Alamogordo, NM

Sample: GCD4158-CC3992
Lab FileID: CD100653.D

```
                    Evaluate Continuing Calibration Report

 Signal #1 : C:\HPCHEM\1\DATA\111910\CD100653.D\FID1B.CH  Vial: 25
 Signal #2 : C:\HPCHEM\1\DATA\111910\CD100653.D\FID2A.CH
 Acq On    : 19 Nov 2010   7:22 pm                    Operator: Wilfredo
 Sample    : cc3992-3                                 Inst    : VOA2
 Misc      : gc11633,gcd4158,,,,,                     Multiplr: 1.00
 IntFile Signal #1: PID.E        IntFile Signal #2: events2.e

 Method       : C:\HPCHEM\1\METHODS\GROW-CD.M (Chemstation Integrator)
 Title        : EPA 8015B/TPHGRO by GC-PID/FID
 Last Update  : Thu Nov 11 08:21:51 2010
 Response via : Multiple Level Calibration

 Min. RRF     :   0.000  Min. Rel. Area :  50%  Max. R.T. Dev  0.10min
 Max. RRF Dev :  20%     Max. Rel. Area : 150%

        Compound                Amount  Calc.    %Drift Area% Dev(min)RT Window
 ---------------------------------------------------------------------------
 1 S   a,a,a-TFT               20.000  17.199     14.0   88   0.00    7.40- 7.60
 2 S   BFB                     20.000  17.962     10.2   91   0.00   11.81-12.01

*****  Signal #2   *****

 4 S   a,a,a-TFT #2            20.000  23.288    -16.4  128   0.00    7.40- 7.60
 5 S   BFB #2                  20.000  19.663      1.7  102   0.00   11.81-12.01
 6 H   TPH-GRO (C6-C10)       400.000 408.896     -2.2  107   0.00    3.98-13.44
---------------------------------------------------------------------------
---------------------------------------------------------------------------

   (#) = Out of Range              SPCC's out = 0  CCC's out = 0
    CD095362.D GROW-CD.M        Sat Nov 20 09:22:56 2010
```

7.7.9

7

Continuing Calibration Summary

Job Number: F78009
Account: TETTNOAK Tetra Tech, Inc
Project: Holloman AFB; Alamogordo, NM

Sample: GCD4158-ECC3992
Lab FileID: CD100662.D

```
                    Evaluate Continuing Calibration Report

 Signal #1 : C:\HPCHEM\1\DATA\111910\CD100662.D\FID1B.CH  Vial: 33
 Signal #2 : C:\HPCHEM\1\DATA\111910\CD100662.D\FID2A.CH
 Acq On    : 19 Nov 2010  11:00 pm                    Operator: Wilfredo
 Sample    : ecc3992-3                                Inst    : VOA2
 Misc      : gc11633,gcd4158,,,,,                     Multiplr: 1.00
 IntFile Signal #1: PID.E        IntFile Signal #2: events2.e

 Method       : C:\HPCHEM\1\METHODS\GROW-CD.M (Chemstation Integrator)
 Title        : EPA 8015B/TPHGRO by GC-PID/FID
 Last Update  : Thu Nov 11 08:21:51 2010
 Response via : Multiple Level Calibration

 Min. RRF     :   0.000  Min. Rel. Area :  50%  Max. R.T. Dev  0.10min
 Max. RRF Dev :  20%     Max. Rel. Area : 150%

        Compound                Amount  Calc.    %Drift Area% Dev(min)RT Window
 ---------------------------------------------------------------------------
 1 S   a,a,a-TFT               20.000  17.349     13.3   89   0.00    7.40- 7.60
 2 S   BFB                     20.000  18.075      9.6   92   0.00   11.81-12.01

*****  Signal #2   *****

 4 S   a,a,a-TFT #2            20.000  22.579    -12.9  124   0.00    7.40- 7.60
 5 S   BFB #2                  20.000  20.739     -3.7  108   0.00   11.81-12.01
 6 H   TPH-GRO (C6-C10)       400.000 381.848      4.5  100   0.00    3.98-13.44
---------------------------------------------------------------------------
---------------------------------------------------------------------------

   (#) = Out of Range              SPCC's out = 0  CCC's out = 0
    CD095362.D GROW-CD.M        Sat Nov 20 09:22:56 2010
```

7.7.10

7

Initial Calibration Summary

Job Number: F78009
Account: TETTNOAK Tetra Tech, Inc
Project: Holloman AFB; Alamogordo, NM

Sample: GQR2471-ICC2471
Lab FileID: QR056752.D

```
                         Response Factor Report  VOA3

  Method       : C:\HPCHEM\1\METHODS\8015S-QR.M (Chemstation Integrator)
  Title        : SW846 8015 TPH by GC-FID
  Last Update  : Thu Nov 18 08:10:40 2010
  Response via : Initial Calibration

  Calibration Files
  1   =QR056749.D  2   =QR056750.D  3   =QR056751.D  4   =QR056752.D
  5      =QR056753.D   6      =QR056754.D

        Compound              1     2     3     4     5     6     Avg    %RSD
  ---------------------------------------------------------------------------
  1) S   a,a,a-TFT           0.810 0.850 0.873 0.915 1.002 1.040 0.915 E3   9.81
  2) S   BFB                 2.444 2.516 2.488 2.438 2.466 2.533 2.481 E3   1.55

Signal #2

  4) S   a,a,a-TFT #2        3.400 3.659 3.926 4.261 5.101 5.421 4.295 E4  18.81
  5)  S  BFB #2              2.150 2.303 2.307 2.447 2.356 3.081 2.441 E4  13.46
  6) H   TPH-GRO (C6-C10)    4.801 4.140 3.845 3.759 3.686 3.681 3.985 E4  10.89
             ---- Linear regression ----  Coefficient =  1.0000
               Response Ratio = 1199156.04030 + 35523.03259 *A

 ---------------------------------------------------------------------------
 (#) = Out of Range

           8015S-QR.M        Thu Nov 18 12:44:49 2010
```

7.7.11

7

Initial Calibration Verification

Job Number: F78009
Account: TETTNOAK Tetra Tech, Inc
Project: Holloman AFB; Alamogordo, NM

Sample: GQR2471-ICV2471
Lab FileID: QR056755.D

Evaluate Continuing Calibration Report

```
Signal #1 : C:\HPCHEM\1\DATA\111710\QR056755.D\FID1B.CH  Vial: 15
Signal #2 : C:\HPCHEM\1\DATA\111710\QR056755.D\FID2A.CH
Acq On    : 17 Nov 2010   4:37 pm                    Operator: ArielH
Sample    : icv2471-3                                Inst    : VOA3
Misc      : gc11611,gqr2471,5.00,,100,5.0,,soil      Multiplr: 1.00
IntFile Signal #1: PID.E        IntFile Signal #2: events2.e

Method       : C:\HPCHEM\1\METHODS\8015S-QR.M (Chemstation Integrator)
Title        : SW846 8015 TPH by GC-FID
Last Update  : Thu Nov 18 08:10:40 2010
Response via : Multiple Level Calibration

Min. RRF     :   0.000  Min. Rel. Area :  50%  Max. R.T. Dev  0.10min
Max. RRF Dev :  15%     Max. Rel. Area : 150%
```

	Compound	Amount	Calc.	%Drift	Area%	Dev(min)	RT Window
1 S	a,a,a-TFT	20.000	18.987	5.1	99	-0.01	9.42- 9.62
2 S	BFB	20.000	19.664	1.7	98	0.00	14.86-15.06
*****	Signal #2 *****						
4 S	a,a,a-TFT #2	20.000	18.054	9.7	99	-0.01	9.42- 9.62
5 S	BFB #2	20.000	17.473	12.6	92	0.00	14.86-15.06
6 H	TPH-GRO (C6-C10)	400.000	345.804	13.5	88	0.00	4.95-16.63

(#) = Out of Range SPCC's out = 0 CCC's out = 0
QR056751.D 8015S-QR.M Thu Nov 18 12:44:37 2010

7.7.12

7

Continuing Calibration Summary

Job Number: F78009
Account: TETTNOAK Tetra Tech, Inc
Project: Holloman AFB; Alamogordo, NM

Sample: GQR2473-CC2471
Lab FileID: QR056846.D

```
                    Evaluate Continuing Calibration Report

 Signal #1 : C:\HPCHEM\1\DATA\111910\QR056846.D\FID1B.CH  Vial: 4
 Signal #2 : C:\HPCHEM\1\DATA\111910\QR056846.D\FID2A.CH
 Acq On    : 19 Nov 2010  10:52 am                    Operator: ArielH
 Sample    : cc2471-4                                 Inst    : VOA3
 Misc      : gc11626,gqr2473,5.00,,100,5.0,,soil      Multiplr: 1.00
 IntFile Signal #1: PID.E        IntFile Signal #2: events2.e

 Method       : C:\HPCHEM\1\METHODS\8015S-QR.M (Chemstation Integrator)
 Title        : SW846 8015 TPH by GC-FID
 Last Update  : Thu Nov 18 08:10:40 2010
 Response via : Multiple Level Calibration

 Min. RRF     :   0.000  Min. Rel. Area :  50%  Max. R.T. Dev  0.10min
 Max. RRF Dev :  15%     Max. Rel. Area : 150%

        Compound                Amount  Calc.    %Drift Area% Dev(min)RT Window
 ---------------------------------------------------------------------------
 1 S   a,a,a-TFT               20.000  19.898      0.5   99   0.00    9.42- 9.62
 2 S   BFB                     20.000  18.863      5.7   96   0.00   14.86-15.06

*****  Signal #2   *****

 4 S   a,a,a-TFT #2            20.000  20.979     -4.9  106   0.00    9.42- 9.62
 5  S  BFB #2                  20.000  21.137     -5.7  105   0.00   14.86-15.06
 6 H   TPH-GRO (C6-C10)       600.000 616.484     -2.7  102   0.00    4.95-16.63
-----------------------------------------------------------------------------
-----------------------------------------------------------------------------

   (#) = Out of Range              SPCC's out = 0  CCC's out = 0
    QR056752.D 8015S-QR.M       Mon Nov 22 11:53:05 2010
```

7.7.13

7

Continuing Calibration Summary

Job Number: F78009
Account: TETTNOAK Tetra Tech, Inc
Project: Holloman AFB; Alamogordo, NM

Sample: GQR2473-CC2471
Lab FileID: QR056857.D

```
                    Evaluate Continuing Calibration Report

 Signal #1 : C:\HPCHEM\1\DATA\111910\QR056857.D\FID1B.CH  Vial: 15
 Signal #2 : C:\HPCHEM\1\DATA\111910\QR056857.D\FID2A.CH
 Acq On    : 19 Nov 2010   3:44 pm                    Operator: ArielH
 Sample    : cc2471-3                                 Inst    : VOA3
 Misc      : gc11635,gqr2473,5.00,,100,5.0,,soil      Multiplr: 1.00
 IntFile Signal #1: PID.E        IntFile Signal #2: events2.e

 Method       : C:\HPCHEM\1\METHODS\8015S-QR.M (Chemstation Integrator)
 Title        : SW846 8015 TPH by GC-FID
 Last Update  : Thu Nov 18 08:10:40 2010
 Response via : Multiple Level Calibration

 Min. RRF     :   0.000  Min. Rel. Area :  50%  Max. R.T. Dev  0.10min
 Max. RRF Dev :  15%     Max. Rel. Area : 150%

        Compound                Amount  Calc.    %Drift Area% Dev(min)RT Window
 ---------------------------------------------------------------------------
 1 S   a,a,a-TFT               20.000  18.360      8.2   96   0.00    9.42- 9.62
 2 S   BFB                     20.000  18.947      5.3   94   0.01   14.86-15.06

*****  Signal #2   *****

 4 S   a,a,a-TFT #2            20.000  17.777     11.1   97   0.00    9.42- 9.62
 5  S  BFB #2                  20.000  18.290      8.6   97   0.01   14.86-15.06
 6 H   TPH-GRO (C6-C10)       400.000 405.693     -1.4  101   0.00    4.95-16.63
---------------------------------------------------------------------------
---------------------------------------------------------------------------

   (#) = Out of Range              SPCC's out = 0  CCC's out = 0
    QR056751.D 8015S-QR.M       Mon Nov 22 11:53:42 2010
```

7.7.14

7

Continuing Calibration Summary

Job Number: F78009
Account: TETTNOAK Tetra Tech, Inc
Project: Holloman AFB; Alamogordo, NM

Sample: GQR2473-CC2471
Lab FileID: QR056868.D

```
                    Evaluate Continuing Calibration Report

 Signal #1 : C:\HPCHEM\1\DATA\111910\QR056868.D\FID1B.CH  Vial: 26
 Signal #2 : C:\HPCHEM\1\DATA\111910\QR056868.D\FID2A.CH
 Acq On    : 19 Nov 2010   8:37 pm                    Operator: ArielH
 Sample    : cc2471-3                                 Inst    : VOA3
 Misc      : gc11626,gqr2473,5.00,,100,5.0,,soil      Multiplr: 1.00
 IntFile Signal #1: PID.E        IntFile Signal #2: events2.e

 Method       : C:\HPCHEM\1\METHODS\8015S-QR.M (Chemstation Integrator)
 Title        : SW846 8015 TPH by GC-FID
 Last Update  : Thu Nov 18 08:10:40 2010
 Response via : Multiple Level Calibration

 Min. RRF     :   0.000  Min. Rel. Area :  50%  Max. R.T. Dev  0.10min
 Max. RRF Dev :  15%     Max. Rel. Area : 150%

        Compound                Amount  Calc.    %Drift Area% Dev(min)RT Window
 ---------------------------------------------------------------------------
 1 S   a,a,a-TFT               20.000  18.121      9.4   95  -0.01    9.42- 9.62
 2 S   BFB                     20.000  18.960      5.2   95   0.00   14.86-15.06

*****  Signal #2   *****

 4 S   a,a,a-TFT #2            20.000  17.904     10.5   98  -0.01    9.42- 9.62
 5  S  BFB #2                  20.000  17.909     10.5   95   0.00   14.86-15.06
 6 H   TPH-GRO (C6-C10)       400.000 387.603      3.1   97   0.00    4.95-16.63
---------------------------------------------------------------------------
---------------------------------------------------------------------------

   (#) = Out of Range              SPCC's out = 0  CCC's out = 0
    QR056751.D 8015S-QR.M       Mon Nov 22 11:53:43 2010
```

7.7.15

7

Continuing Calibration Summary

Job Number: F78009
Account: TETTNOAK Tetra Tech, Inc
Project: Holloman AFB; Alamogordo, NM

Sample: GQR2473-ECC2471
Lab FileID: QR056875.D

```
                    Evaluate Continuing Calibration Report

 Signal #1 : C:\HPCHEM\1\DATA\111910\QR056875.D\FID1B.CH  Vial: 33
 Signal #2 : C:\HPCHEM\1\DATA\111910\QR056875.D\FID2A.CH
 Acq On    : 19 Nov 2010  11:45 pm                    Operator: ArielH
 Sample    : ecc2471-3                                Inst    : VOA3
 Misc      : gc11626,gqr2473,5.00,,100,5.0,,soil      Multiplr: 1.00
 IntFile Signal #1: PID.E        IntFile Signal #2: events2.e

 Method       : C:\HPCHEM\1\METHODS\8015S-QR.M (Chemstation Integrator)
 Title        : SW846 8015 TPH by GC-FID
 Last Update  : Thu Nov 18 08:10:40 2010
 Response via : Multiple Level Calibration

 Min. RRF     :   0.000  Min. Rel. Area :  50%  Max. R.T. Dev  0.10min
 Max. RRF Dev :  15%     Max. Rel. Area : 150%

        Compound                Amount  Calc.    %Drift Area% Dev(min)RT Window
 ---------------------------------------------------------------------------
 1 S   a,a,a-TFT               20.000  17.672     11.6   93   0.00    9.42- 9.62
 2 S   BFB                     20.000  18.435      7.8   92   0.00   14.86-15.06

*****  Signal #2   *****

 4 S   a,a,a-TFT #2            20.000  17.843     10.8   98  -0.01    9.42- 9.62
 5  S  BFB #2                  20.000  18.468      7.7   98   0.00   14.86-15.06
 6 H   TPH-GRO (C6-C10)       400.000 345.922     13.5   88   0.00    4.95-16.63
-------------------------------------------------------------------------------
-------------------------------------------------------------------------------

   (#) = Out of Range              SPCC's out = 0  CCC's out = 0
    QR056751.D 8015S-QR.M       Mon Nov 22 11:53:43 2010
```

Continuing Calibration Summary

Job Number: F78009
Account: TETTNOAK Tetra Tech, Inc
Project: Holloman AFB; Alamogordo, NM

Sample: GQR2474-CC2471
Lab FileID: QR056878.D

```
                    Evaluate Continuing Calibration Report

 Signal #1 : C:\HPCHEM\1\DATA\111910\QR056878.D\FID1B.CH  Vial: 36
 Signal #2 : C:\HPCHEM\1\DATA\111910\QR056878.D\FID2A.CH
 Acq On    : 20 Nov 2010   1:06 am                    Operator: ArielH
 Sample    : cc2471-4                                 Inst    : VOA3
 Misc      : gc11640,gqr2474,5.00,,100,5.0,,soil      Multiplr: 1.00
 IntFile Signal #1: PID.E        IntFile Signal #2: events2.e

 Method       : C:\HPCHEM\1\METHODS\8015S-QR.M (Chemstation Integrator)
 Title        : SW846 8015 TPH by GC-FID
 Last Update  : Thu Nov 18 08:10:40 2010
 Response via : Multiple Level Calibration

 Min. RRF     :   0.000  Min. Rel. Area :  50%  Max. R.T. Dev  0.10min
 Max. RRF Dev :  15%     Max. Rel. Area : 150%

        Compound                Amount  Calc.    %Drift Area% Dev(min)RT Window
 ---------------------------------------------------------------------------
 1 S   a,a,a-TFT               20.000  18.969      5.2   95  -0.01    9.42- 9.62
 2 S   BFB                     20.000  18.703      6.5   95   0.00   14.86-15.06

*****  Signal #2   *****

 4 S   a,a,a-TFT #2            20.000  19.419      2.9   98  -0.01    9.42- 9.62
 5  S  BFB #2                  20.000  17.468     12.7   87   0.00   14.86-15.06
 6 H   TPH-GRO (C6-C10)       600.000 553.676      7.7   93   0.00    4.95-16.63
-----------------------------------------------------------------------------
-----------------------------------------------------------------------------

   (#) = Out of Range              SPCC's out = 0  CCC's out = 0
    QR056752.D 8015S-QR.M       Mon Nov 22 11:53:06 2010
```

7.1.17

7

Continuing Calibration Summary

Job Number: F78009
Account: TETTNOAK Tetra Tech, Inc
Project: Holloman AFB; Alamogordo, NM

Sample: GQR2474-CC2471
Lab FileID: QR056889.D

```
                    Evaluate Continuing Calibration Report

 Signal #1 : C:\HPCHEM\1\DATA\111910\QR056889.D\FID1B.CH  Vial: 47
 Signal #2 : C:\HPCHEM\1\DATA\111910\QR056889.D\FID2A.CH
 Acq On    : 20 Nov 2010   6:01 am                    Operator: ArielH
 Sample    : cc2471-3                                 Inst    : VOA3
 Misc      : gc11640,gqr2474,5.00,,100,5.0,,soil      Multiplr: 1.00
 IntFile Signal #1: PID.E        IntFile Signal #2: events2.e

 Method       : C:\HPCHEM\1\METHODS\8015S-QR.M (Chemstation Integrator)
 Title        : SW846 8015 TPH by GC-FID
 Last Update  : Thu Nov 18 08:10:40 2010
 Response via : Multiple Level Calibration

 Min. RRF     :   0.000  Min. Rel. Area :  50%  Max. R.T. Dev  0.10min
 Max. RRF Dev :  15%     Max. Rel. Area : 150%

        Compound                Amount  Calc.    %Drift Area% Dev(min)RT Window
 ---------------------------------------------------------------------------
 1 S   a,a,a-TFT               20.000  17.525     12.4   92  -0.01    9.42- 9.62
 2 S   BFB                     20.000  18.400      8.0   92   0.00   14.86-15.06

*****  Signal #2   *****

 4 S   a,a,a-TFT #2            20.000  17.310     13.5   95  -0.01    9.42- 9.62
 5  S  BFB #2                  20.000  18.921      5.4  100   0.00   14.86-15.06
 6 H   TPH-GRO (C6-C10)       400.000 355.182     11.2   90   0.00    4.95-16.63
---------------------------------------------------------------------------
---------------------------------------------------------------------------

   (#) = Out of Range              SPCC's out = 0  CCC's out = 0
    QR056751.D 8015S-QR.M       Mon Nov 22 11:53:44 2010
```

7.7.18

7

Continuing Calibration Summary

Job Number: F78009
Account: TETTNOAK Tetra Tech, Inc
Project: Holloman AFB; Alamogordo, NM

Sample: GQR2474-CC2471
Lab FileID: QR056900.D

```
                    Evaluate Continuing Calibration Report

 Signal #1 : C:\HPCHEM\1\DATA\111910\QR056900.D\FID1B.CH  Vial: 7
 Signal #2 : C:\HPCHEM\1\DATA\111910\QR056900.D\FID2A.CH
 Acq On    : 20 Nov 2010  10:54 am                    Operator: ArielH
 Sample    : cc2471-3                                 Inst    : VOA3
 Misc      : gc11640,gqr2474,5.00,,100,5.0,,soil      Multiplr: 1.00
 IntFile Signal #1: PID.E        IntFile Signal #2: events2.e

 Method       : C:\HPCHEM\1\METHODS\8015S-QR.M (Chemstation Integrator)
 Title        : SW846 8015 TPH by GC-FID
 Last Update  : Thu Nov 18 08:10:40 2010
 Response via : Multiple Level Calibration

 Min. RRF     :   0.000  Min. Rel. Area :  50%  Max. R.T. Dev  0.10min
 Max. RRF Dev :  15%     Max. Rel. Area : 150%

        Compound                Amount  Calc.    %Drift Area% Dev(min)RT Window
 ---------------------------------------------------------------------------
 1 S   a,a,a-TFT               20.000  18.590      7.1   97   0.00    9.42- 9.62
 2 S   BFB                     20.000  19.376      3.1   97   0.00   14.86-15.06

*****  Signal #2   *****

 4 S   a,a,a-TFT #2            20.000  18.063      9.7   99   0.00    9.42- 9.62
 5  S  BFB #2                  20.000  18.597      7.0   98   0.00   14.86-15.06
 6 H   TPH-GRO (C6-C10)       400.000 369.480      7.6   93   0.00    4.95-16.63
-------------------------------------------------------------------------------
-------------------------------------------------------------------------------

   (#) = Out of Range              SPCC's out = 0  CCC's out = 0
    QR056751.D 8015S-QR.M       Mon Nov 22 11:53:44 2010
```

7.7.19

7

Continuing Calibration Summary

Job Number: F78009
Account: TETTNOAK Tetra Tech, Inc
Project: Holloman AFB; Alamogordo, NM

Sample: GQR2474-ECC2471
Lab FileID: QR056907.D

```
                    Evaluate Continuing Calibration Report

 Signal #1 : C:\HPCHEM\1\DATA\111910\QR056907.D\FID1B.CH  Vial: 14
 Signal #2 : C:\HPCHEM\1\DATA\111910\QR056907.D\FID2A.CH
 Acq On    : 20 Nov 2010   2:00 pm                    Operator: ArielH
 Sample    : ecc2471-3                                Inst    : VOA3
 Misc      : gc11640,gqr2474,5.00,,100,5.0,,soil      Multiplr: 1.00
 IntFile Signal #1: PID.E        IntFile Signal #2: events2.e

 Method       : C:\HPCHEM\1\METHODS\8015S-QR.M (Chemstation Integrator)
 Title        : SW846 8015 TPH by GC-FID
 Last Update  : Thu Nov 18 08:10:40 2010
 Response via : Multiple Level Calibration

 Min. RRF     :   0.000  Min. Rel. Area :  50%  Max. R.T. Dev  0.10min
 Max. RRF Dev :  15%     Max. Rel. Area : 150%

        Compound                Amount  Calc.    %Drift Area% Dev(min)RT Window
 ---------------------------------------------------------------------------
 1 S   a,a,a-TFT               20.000  18.240      8.8   96   0.00    9.42- 9.62
 2 S   BFB                     20.000  19.150      4.3   95   0.00   14.86-15.06

*****  Signal #2   *****

 4 S   a,a,a-TFT #2            20.000  17.489     12.6   96   0.00    9.42- 9.62
 5  S  BFB #2                  20.000  17.758     11.2   94   0.00   14.86-15.06
 6 H   TPH-GRO (C6-C10)       400.000 346.695     13.3   88   0.00    4.95-16.63
-------------------------------------------------------------------------------
-------------------------------------------------------------------------------

   (#) = Out of Range              SPCC's out = 0  CCC's out = 0
    QR056751.D 8015S-QR.M       Mon Nov 22 11:53:45 2010
```

7.7.20

7

Continuing Calibration Summary

Job Number: F78009
Account: TETTNOAK Tetra Tech, Inc
Project: Holloman AFB; Alamogordo, NM

Sample: GQR2475-CC2471
Lab FileID: QR056910.D

```
                    Evaluate Continuing Calibration Report

 Signal #1 : C:\HPCHEM\1\DATA\112010\QR056910.D\FID1B.CH  Vial: 17
 Signal #2 : C:\HPCHEM\1\DATA\112010\QR056910.D\FID2A.CH
 Acq On    : 20 Nov 2010   3:20 pm                    Operator: ArielH
 Sample    : cc2471-4                                 Inst    : VOA3
 Misc      : gc11642,gqr2475,5.00,,100,5.0,,soil      Multiplr: 1.00
 IntFile Signal #1: PID.E        IntFile Signal #2: events2.e

 Method       : C:\HPCHEM\1\METHODS\8015S-QR.M (Chemstation Integrator)
 Title        : SW846 8015 TPH by GC-FID
 Last Update  : Thu Nov 18 08:10:40 2010
 Response via : Multiple Level Calibration

 Min. RRF     :   0.000  Min. Rel. Area :  50%  Max. R.T. Dev  0.10min
 Max. RRF Dev :  15%     Max. Rel. Area : 150%

        Compound                Amount  Calc.    %Drift Area% Dev(min)RT Window
 ---------------------------------------------------------------------------
 1 S   a,a,a-TFT               20.000  19.458      2.7   97   0.00    9.42- 9.62
 2 S   BFB                     20.000  19.010      4.9   97   0.00   14.86-15.06

*****  Signal #2   *****

 4 S   a,a,a-TFT #2            20.000  19.951      0.2  101  -0.01    9.42- 9.62
 5  S  BFB #2                  20.000  17.698     11.5   88   0.00   14.86-15.06
 6 H   TPH-GRO (C6-C10)       600.000 564.618      5.9   94   0.00    4.95-16.63
---------------------------------------------------------------------------
---------------------------------------------------------------------------

   (#) = Out of Range              SPCC's out = 0  CCC's out = 0
    QR056752.D 8015S-QR.M       Mon Nov 22 13:59:32 2010
```

7.7.21

7

Continuing Calibration Summary

Job Number: F78009
Account: TETTNOAK Tetra Tech, Inc
Project: Holloman AFB; Alamogordo, NM

Sample: GQR2475-CC2471
Lab FileID: QR056921.D

```
                    Evaluate Continuing Calibration Report

 Signal #1 : C:\HPCHEM\1\DATA\112010\QR056921.D\FID1B.CH  Vial: 28
 Signal #2 : C:\HPCHEM\1\DATA\112010\QR056921.D\FID2A.CH
 Acq On    : 20 Nov 2010   8:14 pm                    Operator: ArielH
 Sample    : cc2471-3                                 Inst    : VOA3
 Misc      : gc11642,gqr2475,5.00,,100,5.0,,soil      Multiplr: 1.00
 IntFile Signal #1: PID.E        IntFile Signal #2: events2.e

 Method       : C:\HPCHEM\1\METHODS\8015S-QR.M (Chemstation Integrator)
 Title        : SW846 8015 TPH by GC-FID
 Last Update  : Thu Nov 18 08:10:40 2010
 Response via : Multiple Level Calibration

 Min. RRF     :   0.000  Min. Rel. Area :  50%  Max. R.T. Dev  0.10min
 Max. RRF Dev :  15%     Max. Rel. Area : 150%

        Compound                Amount  Calc.    %Drift Area% Dev(min)RT Window
 ---------------------------------------------------------------------------
 1 S   a,a,a-TFT               20.000  17.895     10.5   94   0.00    9.42- 9.62
 2 S   BFB                     20.000  19.098      4.5   95   0.00   14.86-15.06

*****  Signal #2   *****

 4 S   a,a,a-TFT #2            20.000  17.613     11.9   96  -0.01    9.42- 9.62
 5  S  BFB #2                  20.000  18.446      7.8   98   0.00   14.86-15.06
 6 H   TPH-GRO (C6-C10)       400.000 355.785     11.1   90   0.00    4.95-16.63
---------------------------------------------------------------------------
---------------------------------------------------------------------------

   (#) = Out of Range              SPCC's out = 0  CCC's out = 0
    QR056751.D 8015S-QR.M       Mon Nov 22 13:59:53 2010
```

7.7.22

7

Continuing Calibration Summary

Job Number: F78009
Account: TETTNOAK Tetra Tech, Inc
Project: Holloman AFB; Alamogordo, NM

Sample: GQR2475-CC2471
Lab FileID: QR056932.D

```
                    Evaluate Continuing Calibration Report

 Signal #1 : C:\HPCHEM\1\DATA\112010\QR056932.D\FID1B.CH  Vial: 39
 Signal #2 : C:\HPCHEM\1\DATA\112010\QR056932.D\FID2A.CH
 Acq On    : 21 Nov 2010   1:07 am                    Operator: ArielH
 Sample    : cc2471-3                                 Inst    : VOA3
 Misc      : gc11642,gqr2475,5.00,,100,5.0,,soil      Multiplr: 1.00
 IntFile Signal #1: PID.E        IntFile Signal #2: events2.e

 Method       : C:\HPCHEM\1\METHODS\8015S-QR.M (Chemstation Integrator)
 Title        : SW846 8015 TPH by GC-FID
 Last Update  : Thu Nov 18 08:10:40 2010
 Response via : Multiple Level Calibration

 Min. RRF     :   0.000  Min. Rel. Area :  50%  Max. R.T. Dev  0.10min
 Max. RRF Dev :  15%     Max. Rel. Area : 150%

        Compound                Amount  Calc.    %Drift Area% Dev(min)RT Window
 ---------------------------------------------------------------------------
 1 S   a,a,a-TFT               20.000  17.950     10.3   94   0.00    9.42- 9.62
 2 S   BFB                     20.000  18.718      6.4   93   0.00   14.86-15.06

*****  Signal #2   *****

 4 S   a,a,a-TFT #2            20.000  18.170      9.1   99   0.00    9.42- 9.62
 5  S  BFB #2                  20.000  18.350      8.2   97   0.00   14.86-15.06
 6 H   TPH-GRO (C6-C10)       400.000 372.994      6.8   94   0.00    4.95-16.63
-------------------------------------------------------------------------------
-------------------------------------------------------------------------------

   (#) = Out of Range              SPCC's out = 0  CCC's out = 0
    QR056751.D 8015S-QR.M       Mon Nov 22 13:59:54 2010
```

7.7.23

7

Continuing Calibration Summary

Job Number: F78009
Account: TETTNOAK Tetra Tech, Inc
Project: Holloman AFB; Alamogordo, NM

Sample: GQR2475-ECC2471
Lab FileID: QR056939.D

```
                    Evaluate Continuing Calibration Report

 Signal #1 : C:\HPCHEM\1\DATA\112010\QR056939.D\FID1B.CH  Vial: 46
 Signal #2 : C:\HPCHEM\1\DATA\112010\QR056939.D\FID2A.CH
 Acq On    : 21 Nov 2010   4:13 am                    Operator: ArielH
 Sample    : ecc2471-3                                Inst    : VOA3
 Misc      : gc11642,gqr2475,5.00,,100,5.0,,soil      Multiplr: 1.00
 IntFile Signal #1: PID.E        IntFile Signal #2: events2.e

 Method       : C:\HPCHEM\1\METHODS\8015S-QR.M (Chemstation Integrator)
 Title        : SW846 8015 TPH by GC-FID
 Last Update  : Thu Nov 18 08:10:40 2010
 Response via : Multiple Level Calibration

 Min. RRF     :   0.000  Min. Rel. Area :  50%  Max. R.T. Dev  0.10min
 Max. RRF Dev :  15%     Max. Rel. Area : 150%

        Compound                Amount  Calc.    %Drift Area% Dev(min)RT Window
 ---------------------------------------------------------------------------
 1 S   a,a,a-TFT               20.000  17.981     10.1   94  -0.01    9.42- 9.62
 2 S   BFB                     20.000  18.908      5.5   94   0.00   14.86-15.06

*****  Signal #2   *****

 4 S   a,a,a-TFT #2            20.000  17.251     13.7   94  -0.01    9.42- 9.62
 5  S  BFB #2                  20.000  18.352      8.2   97   0.00   14.86-15.06
 6 H   TPH-GRO (C6-C10)       400.000 367.076      8.2   93   0.00    4.95-16.63
-------------------------------------------------------------------------------
-------------------------------------------------------------------------------

   (#) = Out of Range              SPCC's out = 0  CCC's out = 0
    QR056751.D 8015S-QR.M       Mon Nov 22 13:59:54 2010
```

7.7.24

7

Continuing Calibration Summary

Job Number: F78009
Account: TETTNOAK Tetra Tech, Inc
Project: Holloman AFB; Alamogordo, NM

Sample: GQR2476-CC2471
Lab FileID: QR056943.D

```
                    Evaluate Continuing Calibration Report

 Signal #1 : C:\HPCHEM\1\DATA\112210\QR056943.D\FID1B.CH  Vial: 3
 Signal #2 : C:\HPCHEM\1\DATA\112210\QR056943.D\FID2A.CH
 Acq On    : 22 Nov 2010  11:21 am                    Operator: ArielH
 Sample    : cc2471-4                                 Inst    : VOA3
 Misc      : gc11640,gqr2476,5.00,,100,5.0,,soil      Multiplr: 1.00
 IntFile Signal #1: PID.E        IntFile Signal #2: events2.e

 Method       : C:\HPCHEM\1\METHODS\8015S-QR.M (Chemstation Integrator)
 Title        : SW846 8015 TPH by GC-FID
 Last Update  : Thu Nov 18 08:10:40 2010
 Response via : Multiple Level Calibration

 Min. RRF     :   0.000  Min. Rel. Area :  50%  Max. R.T. Dev  0.10min
 Max. RRF Dev :  15%     Max. Rel. Area : 150%

        Compound                Amount  Calc.    %Drift Area% Dev(min)RT Window
 ---------------------------------------------------------------------------
 1 S   a,a,a-TFT               20.000  20.509     -2.5  103  -0.01    9.42- 9.62
 2 S   BFB                     20.000  19.724      1.4  100   0.00   14.86-15.06

*****  Signal #2   *****

 4 S   a,a,a-TFT #2            20.000  20.741     -3.7  105  -0.01    9.42- 9.62
 5  S  BFB #2                  20.000  17.015     14.9   85   0.00   14.86-15.06
 6 H   TPH-GRO (C6-C10)       600.000 626.429     -4.4  104   0.00    4.95-16.63
---------------------------------------------------------------------------
---------------------------------------------------------------------------

   (#) = Out of Range              SPCC's out = 0  CCC's out = 0
    QR056752.D 8015S-QR.M       Tue Nov 23 14:07:58 2010
```

7.7.25

7

Continuing Calibration Summary

Job Number: F78009
Account: TETTNOAK Tetra Tech, Inc
Project: Holloman AFB; Alamogordo, NM

Sample: GQR2476-CC2471
Lab FileID: QR056953.D

```
                    Evaluate Continuing Calibration Report

 Signal #1 : C:\HPCHEM\1\DATA\112210\QR056953.D\FID1B.CH  Vial: 13
 Signal #2 : C:\HPCHEM\1\DATA\112210\QR056953.D\FID2A.CH
 Acq On    : 22 Nov 2010   4:56 pm                    Operator: ArielH
 Sample    : CC2471-3                                 Inst    : VOA3
 Misc      : gc11642,gqr2476,5.00,,100,5.0,,soil      Multiplr: 1.00
 IntFile Signal #1: PID.E        IntFile Signal #2: events2.e

 Method       : C:\HPCHEM\1\METHODS\8015S-QR.M (Chemstation Integrator)
 Title        : SW846 8015 TPH by GC-FID
 Last Update  : Thu Nov 18 08:10:40 2010
 Response via : Multiple Level Calibration

 Min. RRF     :   0.000  Min. Rel. Area :  50%  Max. R.T. Dev  0.10min
 Max. RRF Dev :  15%     Max. Rel. Area : 150%

        Compound                Amount  Calc.    %Drift Area% Dev(min)RT Window
 ---------------------------------------------------------------------------
 1 S   a,a,a-TFT               20.000  19.161      4.2  100   0.00    9.42- 9.62
 2 S   BFB                     20.000  19.763      1.2   99   0.00   14.86-15.06

*****  Signal #2   *****

 4 S   a,a,a-TFT #2            20.000  18.770      6.2  103   0.00    9.42- 9.62
 5  S  BFB #2                  20.000  18.946      5.3  100   0.00   14.86-15.06
 6 H   TPH-GRO (C6-C10)       400.000 409.535     -2.4  102   0.00    4.95-16.63
---------------------------------------------------------------------------
---------------------------------------------------------------------------

   (#) = Out of Range              SPCC's out = 0  CCC's out = 0
    QR056751.D 8015S-QR.M       Tue Nov 23 14:08:40 2010
```

7.7.26

7

Continuing Calibration Summary

Job Number: F78009
Account: TETTNOAK Tetra Tech, Inc
Project: Holloman AFB; Alamogordo, NM

Sample: GQR2476-CC2471
Lab FileID: QR056964.D

```
                    Evaluate Continuing Calibration Report

 Signal #1 : C:\HPCHEM\1\DATA\112210\QR056964.D\FID1B.CH  Vial: 24
 Signal #2 : C:\HPCHEM\1\DATA\112210\QR056964.D\FID2A.CH
 Acq On    : 22 Nov 2010   9:49 pm                    Operator: ArielH
 Sample    : CC2471-3                                 Inst    : VOA3
 Misc      : gc11647,gqr2476,5.00,,100,5.0,,soil      Multiplr: 1.00
 IntFile Signal #1: PID.E        IntFile Signal #2: events2.e

 Method       : C:\HPCHEM\1\METHODS\8015S-QR.M (Chemstation Integrator)
 Title        : SW846 8015 TPH by GC-FID
 Last Update  : Thu Nov 18 08:10:40 2010
 Response via : Multiple Level Calibration

 Min. RRF     :   0.000  Min. Rel. Area :  50%  Max. R.T. Dev  0.10min
 Max. RRF Dev :  15%     Max. Rel. Area : 150%

        Compound                Amount  Calc.    %Drift Area% Dev(min)RT Window
 ---------------------------------------------------------------------------
 1 S   a,a,a-TFT               20.000  18.243      8.8   96  -0.01    9.42- 9.62
 2 S   BFB                     20.000  19.541      2.3   97   0.00   14.86-15.06

*****  Signal #2   *****

 4 S   a,a,a-TFT #2            20.000  17.604     12.0   96  -0.01    9.42- 9.62
 5  S  BFB #2                  20.000  18.891      5.5  100   0.00   14.86-15.06
 6 H   TPH-GRO (C6-C10)       400.000 345.157     13.7   88   0.00    4.95-16.63
---------------------------------------------------------------------------
---------------------------------------------------------------------------

   (#) = Out of Range              SPCC's out = 0  CCC's out = 0
    QR056751.D 8015S-QR.M       Tue Nov 23 14:08:41 2010
```

7.7.27

7

Continuing Calibration Summary

Job Number: F78009
Account: TETTNOAK Tetra Tech, Inc
Project: Holloman AFB; Alamogordo, NM

Sample: GQR2476-ECC2471
Lab FileID: QR056974.D

```
                    Evaluate Continuing Calibration Report

 Signal #1 : C:\HPCHEM\1\DATA\112210\QR056974.D\FID1B.CH  Vial: 34
 Signal #2 : C:\HPCHEM\1\DATA\112210\QR056974.D\FID2A.CH
 Acq On    : 23 Nov 2010   2:16 am                    Operator: ArielH
 Sample    : ECC2471-3                                Inst    : VOA3
 Misc      : gc11647,gqr2476,5.00,,100,5.0,,soil      Multiplr: 1.00
 IntFile Signal #1: PID.E        IntFile Signal #2: events2.e

 Method       : C:\HPCHEM\1\METHODS\8015S-QR.M (Chemstation Integrator)
 Title        : SW846 8015 TPH by GC-FID
 Last Update  : Thu Nov 18 08:10:40 2010
 Response via : Multiple Level Calibration

 Min. RRF     :   0.000  Min. Rel. Area :  50%  Max. R.T. Dev  0.10min
 Max. RRF Dev :  15%     Max. Rel. Area : 150%

        Compound                Amount  Calc.    %Drift Area% Dev(min)RT Window
 ---------------------------------------------------------------------------
 1 S   a,a,a-TFT               20.000  18.379      8.1   96  -0.01    9.42- 9.62
 2 S   BFB                     20.000  19.275      3.6   96   0.00   14.86-15.06

*****  Signal #2   *****

 4 S   a,a,a-TFT #2            20.000  17.859     10.7   98  -0.02    9.42- 9.62
 5  S  BFB #2                  20.000  18.479      7.6   98   0.00   14.86-15.06
 6 H   TPH-GRO (C6-C10)       400.000 365.918      8.5   92   0.00    4.95-16.63
---------------------------------------------------------------------------
---------------------------------------------------------------------------

   (#) = Out of Range              SPCC's out = 0  CCC's out = 0
    QR056751.D 8015S-QR.M       Tue Nov 23 14:08:41 2010
```

7.7.28

7

Southeast ACCUTEST LABORATORIES

GC Semi-volatiles

QC Data Summaries

Includes the following where applicable:

- Method Blank Summaries
- Blank Spike Summaries
- Matrix Spike and Duplicate Summaries
- Surrogate Recovery Summaries
- GC Surrogate Retention Time Summaries
- Initial and Continuing Calibration Summaries

Method Blank Summary

Job Number: F78009
Account: TETTNOAK Tetra Tech, Inc
Project: Holloman AFB; Alamogordo, NM

Sample	File ID	DF	Analyzed	By	Prep Date	Prep Batch	Analytical Batch
OP35097-MB	ZF37713.D	1	11/18/10	FEA	11/18/10	OP35097	GZF1576

The QC reported here applies to the following samples: **Method:** SW846 8015C

F78009-36, F78009-37

CAS No.	Compound	Result	RL	MDL	Units	Q
	TPH (C10-C28)	ND	0.25	0.10	mg/l	

CAS No.	Surrogate Recoveries		Limits
84-15-1	o-Terphenyl	80%	42-114%

Blank Spike Summary

Job Number: F78009
Account: TETTNOAK Tetra Tech, Inc
Project: Holloman AFB; Alamogordo, NM

Sample	File ID	DF	Analyzed	By	Prep Date	Prep Batch	Analytical Batch
OP35097-BS	ZF37712.D	1	11/18/10	FEA	11/18/10	OP35097	GZF1576

The QC reported here applies to the following samples: **Method:** SW846 8015C

F78009-36, F78009-37

CAS No.	Compound	Spike mg/l	BSP mg/l	BSP %	Limits
	TPH (C10-C28)	1	0.846	85	59-114

CAS No.	Surrogate Recoveries	BSP	Limits
84-15-1	o-Terphenyl	82%	42-114%

Matrix Spike/Matrix Spike Duplicate Summary

Job Number: F78009
Account: TETTNOAK Tetra Tech, Inc
Project: Holloman AFB; Alamogordo, NM

Sample	File ID	DF	Analyzed	By	Prep Date	Prep Batch	Analytical Batch
OP35097-MS	ZF37715.D	1	11/18/10	FEA	11/18/10	OP35097	GZF1576
OP35097-MSD	ZF37716.D	1	11/18/10	FEA	11/18/10	OP35097	GZF1576
F78009-37	ZF37714.D	1	11/18/10	FEA	11/18/10	OP35097	GZF1576

The QC reported here applies to the following samples: **Method:** SW846 8015C

F78009-36, F78009-37

CAS No.	Compound	F78009-37 mg/l	Q	Spike mg/l	MS mg/l	MS %	MSD mg/l	MSD %	RPD	Limits Rec/RPD
	TPH (C10-C28)	0.129	J	1.92	1.81	87	1.71	82	6	59-114/34

CAS No.	Surrogate Recoveries	MS	MSD	F78009-37	Limits
84-15-1	o-Terphenyl	93%	87%	83%	42-114%

8.3.1

8

Semivolatile Surrogate Recovery Summary

Job Number: F78009
Account: TETTNOAK Tetra Tech, Inc
Project: Holloman AFB; Alamogordo, NM

Method: SW846 8015C **Matrix:** AQ

Samples and QC shown here apply to the above method

Lab Sample ID	Lab File ID	S1 [a]
F78009-36	ZF37717.D	77.0
F78009-37	ZF37714.D	83.0
OP35097-BS	ZF37712.D	82.0
OP35097-MB	ZF37713.D	80.0
OP35097-MS	ZF37715.D	93.0
OP35097-MSD	ZF37716.D	87.0

Surrogate Compounds	Recovery Limits
S1 = o-Terphenyl	42-114%

(a) Recovery from GC signal #1

GC Surrogate Retention Time Summary

Job Number: F78009
Account: TETTNOAK Tetra Tech, Inc
Project: Holloman AFB; Alamogordo, NM

Check Std:	GZF1576-CC1543	**Injection Date:**	11/18/10
Lab File ID:	ZF37692.D	**Injection Time:**	14:15
Instrument ID:	GCZF	**Method:**	SW846 8015C

	S1 [a] **RT**
Check Std	6.27

Lab Sample ID	**Lab File ID**	**Date Analyzed**	**Time Analyzed**	**S1** [a] **RT**
ZZZZZZ	ZF37694.D	11/18/10	15:28	6.27
ZZZZZZ	ZF37695.D	11/18/10	15:49	6.27
ZZZZZZ	ZF37699.D	11/18/10	17:10	6.27
ZZZZZZ	ZF37700.D	11/18/10	17:31	6.27
ZZZZZZ	ZF37701.D	11/18/10	17:51	6.27
GZF1576-RT	ZF37702.D	11/18/10	18:11	6.27

Surrogate Compounds

S1 = o-Terphenyl

(a) Retention time from GC signal #1

GC Surrogate Retention Time Summary

Job Number: F78009
Account: TETTNOAK Tetra Tech, Inc
Project: Holloman AFB; Alamogordo, NM

Check Std:	GZF1576-CC1543	**Injection Date:**	11/18/10
Lab File ID:	ZF37710.D	**Injection Time:**	20:54
Instrument ID:	GCZF	**Method:**	SW846 8015C

	S1 [a] **RT**
Check Std	6.27

Lab Sample ID	**Lab File ID**	**Date Analyzed**	**Time Analyzed**	**S1** [a] **RT**
OP35097-BS	ZF37712.D	11/18/10	21:34	6.27
OP35097-MB	ZF37713.D	11/18/10	21:54	6.26
F78009-37	ZF37714.D	11/18/10	22:14	6.27
OP35097-MS	ZF37715.D	11/18/10	22:34	6.27
OP35097-MSD	ZF37716.D	11/18/10	22:55	6.27
F78009-36	ZF37717.D	11/18/10	23:15	6.27
GZF1576-ECC1542	ZF37718.D	11/18/10	23:35	6.27

Surrogate Compounds

S1 = o-Terphenyl

(a) Retention time from GC signal #1

8.5.2

8

Initial Calibration Summary

Job Number: F78009
Account: TETTNOAK Tetra Tech, Inc
Project: Holloman AFB; Alamogordo, NM

Sample: GZF1543-ICC1543
Lab FileID: ZF36759.D

Response Factor Report FID 3

```
Method       : C:\HPCHEM\1\METHODS\F_DRO.M (Chemstation Integrator)
Title        : TPH by SW846 8015B
Last Update  : Tue Aug 31 12:35:44 2010
Response via : Initial Calibration

Calibration Files
200 =ZF36757.D   500 =ZF36758.D   1000=ZF36759.D   2000=ZF36760.D
3000   =ZF36761.D    4000   =ZF36762.D
```

Compound	200	500	1000	2000	3000	4000	Avg	%RSD
1) S O-TERPHENYL	1.254	1.359	1.403	1.293	1.319	1.409	1.339 E4	4.63
2) H TPH (C10-C28)	1.165	1.221	1.242	1.140	1.166	1.250	1.197 E4	3.85

(#) = Out of Range

F_DRO.M Tue Aug 31 14:26:37 2010

8.6.1

8

Initial Calibration Verification

Job Number: F78009
Account: TETTNOAK Tetra Tech, Inc
Project: Holloman AFB; Alamogordo, NM

Sample: GZF1543-ICV1543
Lab FileID: ZF36763.D

Evaluate Continuing Calibration Report

```
Data File : C:\HPCHEM\1\DATA\0831DRO\ZF36763.D          Vial: 8
Acq On    : 31 Aug 2010  12:13 pm                   Operator: marke
Sample    : icv1543-1000                            Inst    : FID 3
Misc      : op34172,gzf1543,1000,,,1,1,water        Multiplr: 1.00
IntFile   : events.e

Method       : C:\HPCHEM\1\METHODS\F_DRO.M (Chemstation Integrator)
Title        : TPH by SW846 8015B
Last Update  : Tue Aug 31 12:35:44 2010
Response via : Multiple Level Calibration

Min. RRF     :   0.000  Min. Rel. Area :  50%  Max. R.T. Dev  0.50min
Max. RRF Dev :  15%     Max. Rel. Area : 150%

       Compound                Amount  Calc.    %Drift Area% Dev(min)RT Window
 ---------------------------------------------------------------------------
 1 S   O-TERPHENYL                        ----------NA----------
 2 H   TPH (C10-C28)          1000.000 1006.919     -0.7   97   0.00    2.79- 8.68
---------------------------------------------------------------------------
---------------------------------------------------------------------------

   (#) = Out of Range               SPCC's out = 0  CCC's out = 0
    ZF36759.D  F_DRO.M          Tue Aug 31 14:26:23 2010
```

8.6.2

8

Continuing Calibration Summary

Job Number: F78009
Account: TETTNOAK Tetra Tech, Inc
Project: Holloman AFB; Alamogordo, NM

Sample: GZF1576-CC1543
Lab FileID: ZF37692.D

Evaluate Continuing Calibration Report

```
Data File : C:\HPCHEM\1\DATA\1117DRO\ZF37692.D          Vial: 63
Acq On    : 18 Nov 2010   2:15 pm                   Operator: enoca
Sample    : cc1543-1000                             Inst    : FID 3
Misc      : op35043,gzf1576,1050,,,1,1,water        Multiplr: 1.00
IntFile   : events.e

Method       : C:\HPCHEM\1\METHODS\F_DRO.M (Chemstation Integrator)
Title        : TPH by SW846 8015C
Last Update  : Wed Nov 17 13:22:15 2010
Response via : Multiple Level Calibration

Min. RRF     :   0.000  Min. Rel. Area :  50%  Max. R.T. Dev  0.50min
Max. RRF Dev :  20%     Max. Rel. Area : 150%
```

	Compound	Amount	Calc.	%Drift	Area%	Dev(min)	RT Window
1 S	O-TERPHENYL	25.000	23.856	4.6	91	0.00	6.17- 6.37
2 H	TPH (C10-C28)	1000.000	997.056	0.3	96	0.00	2.64- 8.51

(#) = Out of Range SPCC's out = 0 CCC's out = 0
ZF36759.D F_DRO.M Fri Nov 19 08:52:54 2010

8.6.3

8

Continuing Calibration Summary

Job Number: F78009
Account: TETTNOAK Tetra Tech, Inc
Project: Holloman AFB; Alamogordo, NM

Sample: GZF1576-CC1543
Lab FileID: ZF37703.D

Evaluate Continuing Calibration Report

```
Data File : C:\HPCHEM\1\DATA\1117DRO\ZF37703.D          Vial: 63
Acq On    : 18 Nov 2010   6:32 pm                   Operator: enoca
Sample    : cc1543-1000                             Inst    : FID 3
Misc      : op35043,gzf1576,1050,,,1,1,water        Multiplr: 1.00
IntFile   : events.e

Method       : C:\HPCHEM\1\METHODS\F_DRO.M (Chemstation Integrator)
Title        : TPH by SW846 8015C
Last Update  : Wed Nov 17 13:22:15 2010
Response via : Multiple Level Calibration

Min. RRF     :   0.000  Min. Rel. Area :  50%  Max. R.T. Dev  0.50min
Max. RRF Dev :  20%     Max. Rel. Area : 150%

       Compound                Amount  Calc.    %Drift Area% Dev(min)RT Window
 ---------------------------------------------------------------------------
 1 S   O-TERPHENYL             25.000  23.556      5.8   90   0.00    6.17- 6.37
 2 H   TPH (C10-C28)          1000.000 1025.056     -2.5   99   0.00    2.64- 8.51
---------------------------------------------------------------------------
---------------------------------------------------------------------------

   (#) = Out of Range               SPCC's out = 0  CCC's out = 0
    ZF36759.D  F_DRO.M          Fri Nov 19 08:52:54 2010
```

8.6.4

8

Continuing Calibration Summary

Job Number: F78009
Account: TETTNOAK Tetra Tech, Inc
Project: Holloman AFB; Alamogordo, NM

Sample: GZF1576-CC1543
Lab FileID: ZF37710.D

Evaluate Continuing Calibration Report

```
Data File : C:\HPCHEM\1\DATA\1117DRO\ZF37710.D          Vial: 63
Acq On    : 18 Nov 2010   8:54 pm                   Operator: enoca
Sample    : cc1543-1000                             Inst    : FID 3
Misc      : op35043,gzf1576,1050,,,1,1,water        Multiplr: 1.00
IntFile   : events.e

Method       : C:\HPCHEM\1\METHODS\F_DRO.M (Chemstation Integrator)
Title        : TPH by SW846 8015C
Last Update  : Wed Nov 17 13:22:15 2010
Response via : Multiple Level Calibration

Min. RRF     :   0.000  Min. Rel. Area :  50%  Max. R.T. Dev  0.50min
Max. RRF Dev :  20%     Max. Rel. Area : 150%
```

	Compound	Amount	Calc.	%Drift	Area%	Dev(min)	RT Window
1 S	O-TERPHENYL	25.000	25.551	-2.2	98	0.00	6.17- 6.37
2 H	TPH (C10-C28)	1000.000	1088.934	-8.9	105	0.00	2.64- 8.51

(#) = Out of Range SPCC's out = 0 CCC's out = 0
ZF36759.D F_DRO.M Fri Nov 19 08:52:54 2010

8.6.5

8

Continuing Calibration Summary

Job Number: F78009
Account: TETTNOAK Tetra Tech, Inc
Project: Holloman AFB; Alamogordo, NM

Sample: GZF1576-ECC1543
Lab FileID: ZF37718.D

Evaluate Continuing Calibration Report

```
Data File : C:\HPCHEM\1\DATA\1117DRO\ZF37718.D          Vial: 53
Acq On    : 18 Nov 2010  11:35 pm                   Operator: enoca
Sample    : ecc1543-2000                            Inst    : FID 3
Misc      : op35097,gzf1576,1000,,,1,1,water        Multiplr: 1.00
IntFile   : events.e

Method       : C:\HPCHEM\1\METHODS\F_DRO.M (Chemstation Integrator)
Title        : TPH by SW846 8015C
Last Update  : Wed Nov 17 13:22:15 2010
Response via : Multiple Level Calibration

Min. RRF     :   0.000  Min. Rel. Area :  50%  Max. R.T. Dev  0.50min
Max. RRF Dev :  20%     Max. Rel. Area : 150%
```

	Compound	Amount	Calc.	%Drift	Area%	Dev(min)	RT Window
1 S	O-TERPHENYL	50.000	50.544	-1.1	105	0.00	6.17- 6.37
2 H	TPH (C10-C28)	2000.000	2080.482	-4.0	109	0.00	2.64- 8.51

(#) = Out of Range SPCC's out = 0 CCC's out = 0
ZF36760.D F_DRO.M Fri Nov 19 08:54:01 2010

8.6.6

8

Southeast ACCUTEST LABORATORIES

Metals Analysis

QC Data Summaries

Includes the following where applicable:

- Instrument Runlogs
- Initial and Continuing Calibration Blanks
- Initial and Continuing Calibration Checks
- High and Low Check Standards
- Interfering Element Check Standards
- Method Blank Summaries
- Matrix Spike and Duplicate Summaries
- Blank Spike and Lab Control Sample Summaries
- Serial Dilution Summaries

Accutest Laboratories Instrument Runlog
Inorganics Analyses

Login Number: F78009
Account: TETTNOAK - Tetra Tech, Inc
Project: Holloman AFB; Alamogordo, NM

File ID: H21119W2.PRN Date Analyzed: 11/19/10 Methods: SW846 7470A
Analyst: LM Run ID: MA8520
Parameters: Hg

Time	Sample Description	Dilution Factor	PS Recov	Comments
10:39	MA8520-STD1	1		STD01REP1
10:41	MA8520-STD2	1		STD02REP1
10:43	MA8520-STD3	1		STD03REP1
10:45	MA8520-STD4	1		STD04REP1
10:48	MA8520-STD5	1		STD05REP1
10:51	MA8520-STD6	1		STD06REP1
10:57	MA8520-HSTD1	1		
11:00	MA8520-ICV1	1		
11:02	MA8520-ICB1	1		
11:04	MA8520-CRI1	1		
11:06	MA8520-CCV1	1		
11:09	MA8520-CCB1	1		
11:12	MP19507-MB1	1		
11:14	MP19507-B1	1		
11:16	F78009-37	1		
11:19	MP19507-D1	1		
11:21	MP19507-SD1	5		
11:24	MP19507-S1	1		
11:26	MP19507-S2	1		
11:28	F78009-36	1		
11:31	F78009-36F	1		
11:33	ZZZZZZ	1		
11:35	MA8520-CCV2	1		
11:38	MA8520-CCB2	1		
11:40	ZZZZZZ	1		
11:42	ZZZZZZ	1		
11:44	ZZZZZZ	1		
11:46	ZZZZZZ	1		
11:49	ZZZZZZ	1		
11:51	ZZZZZZ	1		
11:53	ZZZZZZ	1		
11:56	ZZZZZZ	1		
11:58	ZZZZZZ	1		

Accutest Laboratories Instrument Runlog
Inorganics Analyses

Login Number: F78009
Account: TETTNOAK - Tetra Tech, Inc
Project: Holloman AFB; Alamogordo, NM

File ID: H21119W2.PRN Date Analyzed: 11/19/10 Methods: SW846 7470A
Analyst: LM Run ID: MA8520
Parameters: Hg

Time	Sample Description	Dilution Factor	PS Recov	Comments
12:00	ZZZZZZ	1		
12:09	MA8520-CCV3	1		
12:12	MA8520-CCB3	1		
12:14	MP19507-MB2A	1		
12:17	MP19508-MB1	1		
12:19	MP19508-B1	1		
12:21	F78009-37F	1		
12:23	MP19508-D1	1		
12:25	MP19508-SD1	5		
12:28	MP19508-S1	1		
12:30	MP19508-S2	1		
12:32	ZZZZZZ	1		
12:35	ZZZZZZ	1		
12:37	MA8520-CCV4	1		
12:39	MA8520-CCB4	1		
12:41	ZZZZZZ	1		
12:44	ZZZZZZ	1		
12:57	ZZZZZZ	1		
12:59	ZZZZZZ	1		
13:01	ZZZZZZ	1		
13:03	ZZZZZZ	1		
13:06	ZZZZZZ	1		
13:08	ZZZZZZ	1		
13:10	ZZZZZZ	1		
13:12	ZZZZZZ	1		
13:14	MA8520-CCV5	1		
13:17	MA8520-CCB5	1		
13:19	ZZZZZZ	1		
13:21	ZZZZZZ	1		
13:24	ZZZZZZ	1		
13:26	ZZZZZZ	1		
13:29	ZZZZZZ	1		
13:31	MP19508-MB2A	1		

----------> Last reportable sample/prep for job F78009

Accutest Laboratories Instrument Runlog
Inorganics Analyses

Login Number: F78009
Account: TETTNOAK - Tetra Tech, Inc
Project: Holloman AFB; Alamogordo, NM

File ID: H21119W2.PRN Date Analyzed: 11/19/10 Methods: SW846 7470A
Analyst: LM Run ID: MA8520
Parameters: Hg

Time	Sample Description	Dilution Factor	PS Recov	Comments
13:35	MA8520-CRI2	1		
13:38	MA8520-CCV6	1		
13:40	MA8520-CCB6	1		

----------> Last reportable CCB for job F78009
Refer to raw data for calibration curve and standards.

BLANK RESULTS SUMMARY
Part 1 - Initial and Continuing Calibration Blanks

Login Number: F78009
Account: TETTNOAK - Tetra Tech, Inc
Project: Holloman AFB; Alamogordo, NM

File ID: H21119W2.PRN Date Analyzed: 11/19/10 Methods: SW846 7470A
QC Limits: result < RL Run ID: MA8520 Units: ug/l

Time:			11:02		11:09		11:38		12:12	
Sample ID:			ICB1		CCB1		CCB2		CCB3	
Metal	RL	IDL	raw	final	raw	final	raw	final	raw	final
Mercury	1.0	.071	-0.031	<1.0	-0.046	<1.0	0.033	<1.0	0.0020	<1.0

(*) Outside of QC limits
(anr) Analyte not requested

BLANK RESULTS SUMMARY
Part 1 - Initial and Continuing Calibration Blanks

Login Number: F78009
Account: TETTNOAK - Tetra Tech, Inc
Project: Holloman AFB; Alamogordo, NM

File ID: H21119W2.PRN Date Analyzed: 11/19/10 Methods: SW846 7470A
QC Limits: result < RL Run ID: MA8520 Units: ug/l

Time:			12:39		13:17		13:40	
Sample ID:			CCB4		CCB5		CCB6	
Metal	RL	IDL	raw	final	raw	final	raw	final
Mercury	1.0	.071	-0.041	<1.0	-0.072	<1.0	0.0070	<1.0

(*) Outside of QC limits
(anr) Analyte not requested

CALIBRATION CHECK STANDARDS SUMMARY
Initial and Continuing Calibration Checks

Login Number: F78009
Account: TETTNOAK - Tetra Tech, Inc
Project: Holloman AFB; Alamogordo, NM

File ID: H21119W2.PRN Date Analyzed: 11/19/10 Methods: SW846 7470A
QC Limits: 90 to 110 % Recovery Run ID: MA8520 Units: ug/l

Time:		11:00			11:06			11:35	
Sample ID:	ICV	ICV1		CCV	CCV1		CCV	CCV2	
Metal	True	Results	% Rec	True	Results	% Rec	True	Results	% Rec
Mercury	3	2.8	93.3	3.0	3.0	100.0	3	3.3	110.0

(*) Outside of QC limits
(anr) Analyte not requested

CALIBRATION CHECK STANDARDS SUMMARY
Initial and Continuing Calibration Checks

Login Number: F78009
Account: TETTNOAK - Tetra Tech, Inc
Project: Holloman AFB; Alamogordo, NM

File ID: H21119W2.PRN Date Analyzed: 11/19/10 Methods: SW846 7470A
QC Limits: 90 to 110 % Recovery Run ID: MA8520 Units: ug/l

Time:		12:09			12:37			13:14	
Sample ID:	CCV	CCV3		CCV	CCV4		CCV	CCV5	
Metal	True	Results	% Rec	True	Results	% Rec	True	Results	% Rec
Mercury	3.0	3.0	100.0	3.0	3.0	100.0	3.0	3.0	100.0

(*) Outside of QC limits
(anr) Analyte not requested

CALIBRATION CHECK STANDARDS SUMMARY
Initial and Continuing Calibration Checks

Login Number: F78009
Account: TETTNOAK - Tetra Tech, Inc
Project: Holloman AFB; Alamogordo, NM

File ID: H21119W2.PRN Date Analyzed: 11/19/10 Methods: SW846 7470A
QC Limits: 90 to 110 % Recovery Run ID: MA8520 Units: ug/l

Time:		13:38	
Sample ID:	CCV	CCV6	
Metal	True	Results	% Rec
Mercury	3	3.1	103.3

(*) Outside of QC limits
(anr) Analyte not requested

HIGH STANDARD CHECK SUMMARY

Login Number: F78009
Account: TETTNOAK - Tetra Tech, Inc
Project: Holloman AFB; Alamogordo, NM

File ID: H21119W2.PRN Date Analyzed: 11/19/10 Methods: SW846 7470A
QC Limits: 95 to 105 % Recovery Run ID: MA8520 Units: ug/l

Time:		10:57	
Sample ID:	HSTD	HSTD1	
Metal	True	Results	% Rec
Mercury	6	5.8	96.7

(*) Outside of QC limits
(anr) Analyte not requested

LOW CALIBRATION CHECK STANDARDS SUMMARY

Login Number: F78009
Account: TETTNOAK - Tetra Tech, Inc
Project: Holloman AFB; Alamogordo, NM

File ID: H21119W2.PRN Date Analyzed: 11/19/10 Methods: SW846 7470A
QC Limits: 80 to 120 % Recovery Run ID: MA8520 Units: ug/l

Time:			11:04		13:35	
Sample ID:	CRI	CRIA	CRI1		CRI2	
Metal	True	True	Results	% Rec	Results	% Rec
Mercury	0.20		0.18	90.0	0.15	75.0*(a)

(*) Outside of QC limits
(anr) Analyte not requested
(a) Possible instrument baseline drift.

9.1.4

9

Accutest Laboratories Instrument Runlog
Inorganics Analyses

Login Number: F78009
Account: TETTNOAK - Tetra Tech, Inc
Project: Holloman AFB; Alamogordo, NM

File ID: SA112210M1.ICP Date Analyzed: 11/22/10 Methods: SW846 6010C
Analyst: RS Run ID: MA8526
Parameters: As,Ba,Cd,Cr,Pb,Se,Ag

Time	Sample Description	Dilution Factor	PS Recov	Comments
09:19	MA8526-STD1	1		STDA
09:23	MA8526-STD2	1		STDB
09:26	MA8526-STD3	1		STDC
09:30	MA8526-HSTD1	1		
09:34	MA8526-ICV1	1		
09:42	MA8526-ICB1	1		
09:45	MA8526-CRIA1	1		
09:55	MA8526-ICSA1	1		
10:02	MA8526-ICSAB1	1		
10:07	MA8526-CCV1	1		
10:14	MA8526-CCB1	1		
10:36	F78137-1	5		(sample used for QC only; not part of login F78009)
10:40	MP19505-D1	5		
10:44	MP19505-S1	5		
10:48	MP19505-S2	5		
10:52	MP19505-PS1	5		
10:56	MP19505-SD1	25		
11:04	ZZZZZZ	2		
11:16	MA8526-CCV2	1		
11:20	MA8526-CCB2	1		
11:24	ZZZZZZ	20		
11:28	ZZZZZZ	10		
11:32	ZZZZZZ	5		
11:36	ZZZZZZ	5		
11:40	ZZZZZZ	20		
11:44	ZZZZZZ	2		
11:48	F77976-1	10		(sample used for QC only; not part of login F78009)
11:52	MP19510-D1	10		
11:57	MP19510-S1	10		
12:01	MP19510-S2	10		
12:05	MA8526-CCV3	1		
12:09	MA8526-CCB3	1		
12:13	MP19510-P1S	10		

Accutest Laboratories Instrument Runlog
Inorganics Analyses

Login Number: F78009
Account: TETTNOAK - Tetra Tech, Inc
Project: Holloman AFB; Alamogordo, NM

File ID: SA112210M1.ICP Date Analyzed: 11/22/10 Methods: SW846 6010C
Analyst: RS Run ID: MA8526
Parameters: As,Ba,Cd,Cr,Pb,Se,Ag

Time	Sample Description	Dilution Factor	PS Recov	Comments
12:17	MP19510-SD1	50		
12:21	ZZZZZZ	20		
12:25	ZZZZZZ	10		
12:29	ZZZZZZ	20		
12:33	ZZZZZZ	2		
12:37	ZZZZZZ	10		
12:41	ZZZZZZ	10		
12:46	ZZZZZZ	1		
12:50	ZZZZZZ	1		
12:54	MA8526-CCV4	1		
12:58	MA8526-CCB4	1		
13:02	ZZZZZZ	1		
13:06	ZZZZZZ	1		
13:10	F77958-1	5		(sample used for QC only; not part of login F78009)
13:14	MP19506-D1	5		
13:18	MP19506-S1	5		
13:22	MP19506-S2	5		
13:26	MP19506-PS1	5		
13:30	MP19506-SD1	25		
13:34	ZZZZZZ	4		
13:38	ZZZZZZ	4		
13:42	MA8526-CCV5	1		
13:46	MA8526-CCB5	1		
14:06	MA8526-CCV6	1		
14:11	MA8526-CCB6	1		
14:15	ZZZZZZ	2		
14:19	ZZZZZZ	2		
14:23	ZZZZZZ	4		
14:27	ZZZZZZ	5		
14:31	ZZZZZZ	5		
14:35	ZZZZZZ	5		
14:39	ZZZZZZ	4		
14:43	ZZZZZZ	2		

Accutest Laboratories Instrument Runlog
Inorganics Analyses

Login Number: F78009
Account: TETTNOAK - Tetra Tech, Inc
Project: Holloman AFB; Alamogordo, NM

File ID: SA112210M1.ICP Date Analyzed: 11/22/10 Methods: SW846 6010C
Analyst: RS Run ID: MA8526
Parameters: As,Ba,Cd,Cr,Pb,Se,Ag

Time	Sample Description	Dilution Factor	PS Recov	Comments
14:47	ZZZZZZ	5		
14:51	ZZZZZZ	2		
14:55	MA8526-CCV7	1		
14:59	MA8526-CCB7	1		
15:03	ZZZZZZ	2		
15:08	ZZZZZZ	5		
15:12	ZZZZZZ	10		
15:16	ZZZZZZ	5		
15:20	ZZZZZZ	2		
15:24	MP19521-MB1	1		
15:29	MP19521-B1	1		
15:32	F77997-1	1		(sample used for QC only; not part of login F78009)
15:37	MP19521-D1	1		
15:41	MP19521-SD1	5		
15:45	MA8526-CCV8	1		
15:49	MA8526-CCB8	1		
15:53	MP19521-PS1	1		
15:57	MP19521-S1	1		
16:01	MP19521-S2	1		
16:05	ZZZZZZ	1		
16:09	ZZZZZZ	1		
16:17	ZZZZZZ	1		
16:21	ZZZZZZ	1		
16:25	ZZZZZZ	1		
16:30	ZZZZZZ	1		
16:34	MA8526-CCV9	1		
16:38	MA8526-CCB9	1		
16:42	ZZZZZZ	1		
16:46	ZZZZZZ	1		
16:50	ZZZZZZ	1		
16:54	ZZZZZZ	1		
16:58	ZZZZZZ	1		
17:03	ZZZZZZ	1		

Accutest Laboratories Instrument Runlog
Inorganics Analyses

Login Number: F78009
Account: TETTNOAK - Tetra Tech, Inc
Project: Holloman AFB; Alamogordo, NM

File ID: SA112210M1.ICP Date Analyzed: 11/22/10 Methods: SW846 6010C
Analyst: RS Run ID: MA8526
Parameters: As,Ba,Cd,Cr,Pb,Se,Ag

Time	Sample Description	Dilution Factor	PS Recov	Comments
17:07	ZZZZZZ	1		
17:11	ZZZZZZ	1		
17:15	ZZZZZZ	1		
17:19	MP19524-MB1	1		
17:23	MA8526-CCV10	1		
17:27	MA8526-CCB10	1		
17:31	MP19524-B1	1		
17:35	F78081-3A	1		(sample used for QC only; not part of login F78009)
17:40	MP19524-D1	1		
17:44	MP19524-SD1	5		
17:48	MP19524-S1	1		
17:52	MP19524-S2	1		
17:56	ZZZZZZ	1		
18:00	ZZZZZZ	1		
18:04	ZZZZZZ	1		
18:08	MP19524-D2	1		
18:12	MA8526-CCV11	1		
18:16	MA8526-CCB11	1		
18:20	MP19524-MB2	1		
18:24	MP19524-B2	1		
18:28	MP19523-MB1	1		
18:32	MP19523-B1	1		
18:36	F78009-37	1		
18:40	MP19523-D1	1		
18:45	MP19523-SD1	5		
18:49	MP19523-PS1	1		
18:53	MP19523-S1	1		
18:58	MP19523-S2	1		
19:02	MA8526-CCV12	1		
19:06	MA8526-CCB12	1		
19:10	F78009-36	1		
---------->	Last reportable sample/prep for job F78009			
19:18	ZZZZZZ	1		
19:22	ZZZZZZ	1		

Accutest Laboratories Instrument Runlog
Inorganics Analyses

Login Number: F78009
Account: TETTNOAK - Tetra Tech, Inc
Project: Holloman AFB; Alamogordo, NM

File ID: SA112210M1.ICP Date Analyzed: 11/22/10 Methods: SW846 6010C
Analyst: RS Run ID: MA8526
Parameters: As,Ba,Cd,Cr,Pb,Se,Ag

	Time	Sample Description	Dilution Factor	PS Recov	Comments
	19:27	ZZZZZZ	1		
	19:31	ZZZZZZ	1		
	19:35	ZZZZZZ	1		
	19:39	ZZZZZZ	1		
	19:43	ZZZZZZ	1		
	19:47	ZZZZZZ	1		
	19:51	MA8526-CCV13	1		
	19:55	MA8526-CCB13	1		
---------->	Last reportable CCB for job F78009				
	19:59	ZZZZZZ	1		
	20:03	ZZZZZZ	1		
	20:08	ZZZZZZ	1		
	20:12	ZZZZZZ	1		
	20:16	ZZZZZZ	1		
	20:20	ZZZZZZ	1		
	20:24	ZZZZZZ	1		
	20:28	ZZZZZZ	1		
	20:33	MP19522-MB1	1		
	20:37	MP19522-B1	1		
	20:41	MA8526-CCV14	1		
	20:45	MA8526-CCB14	1		
	20:49	F78056-1	1		(sample used for QC only; not part of login F78009)
	20:53	MP19522-D1	1		
	20:57	MP19522-SD1	5		
	21:01	MP19522-PS1	1		
	21:05	MP19522-S1	1		
	21:09	MP19522-S2	1		
	21:13	ZZZZZZ	1		
	21:17	ZZZZZZ	1		
	21:22	ZZZZZZ	1		
	21:26	ZZZZZZ	1		
	21:30	MA8526-CCV15	1		
	21:34	MA8526-CCB15	1		
	21:38	ZZZZZZ	1		

Accutest Laboratories Instrument Runlog
Inorganics Analyses

Login Number: F78009
Account: TETTNOAK - Tetra Tech, Inc
Project: Holloman AFB; Alamogordo, NM

File ID: SA112210M1.ICP Date Analyzed: 11/22/10 Methods: SW846 6010C
Analyst: RS Run ID: MA8526
Parameters: As,Ba,Cd,Cr,Pb,Se,Ag

Time	Sample Description	Dilution Factor	PS Recov	Comments
21:42	ZZZZZZ	1		
21:46	ZZZZZZ	1		
21:51	ZZZZZZ	1		
21:55	ZZZZZZ	1		
21:59	ZZZZZZ	1		
22:03	ZZZZZZ	1		
22:07	ZZZZZZ	1		
22:11	ZZZZZZ	1		
22:16	ZZZZZZ	1		
22:20	MA8526-CCV16	1		
22:24	MA8526-CCB16	1		
22:28	ZZZZZZ	1		
22:32	ZZZZZZ	1		
22:37	ZZZZZZ	1		
22:41	ZZZZZZ	1		
22:45	ZZZZZZ	1		
22:49	MP19503-D1	10		
23:09	MA8526-CCV17	1		
23:13	MA8526-CCB17	1		

Refer to raw data for calibration curve and standards.

INTERNAL STANDARD SUMMARY

Login Number: F78009
Account: TETTNOAK - Tetra Tech, Inc
Project: Holloman AFB; Alamogordo, NM

File ID: SA112210M1.ICP Date Analyzed: 11/22/10 Methods: SW846 6010C
Analyst: RS Run ID: MA8526
Parameters: As,Ba,Cd,Cr,Pb,Se,Ag

Time	Sample Description	Istd#1	Istd#2	Istd#3	Istd#4	Istd#5
09:19	MA8526-STD1	909	1613	29802	11560	1309
09:23	MA8526-STD2	862	1614	28416	11301	1104
09:26	MA8526-STD3	836	1653	27939	11126	1037
09:30	MA8526-HSTD1	813	1622	27607	11055	1012
09:34	MA8526-ICV1	844	1601	28288	11312	1097
09:42	MA8526-ICB1	921 R	1626 R	29791 R	11527 R	1314 R
09:45	MA8526-CRIA1	896	1614	29609	11548	1241
09:55	MA8526-ICSA1	780	1654	25616	10760	919
10:02	MA8526-ICSAB1	770	1606	25541	10899	907
10:07	MA8526-CCV1	842	1602	27865	11085	1083
10:14	MA8526-CCB1	899	1607	29361	11272	1288
10:36	F78137-1	1007	1856	32774	12748	1196
10:40	MP19505-D1	1008	1817	32470	12523	1192
10:44	MP19505-S1	1014	1869	33009	13032	1158
10:48	MP19505-S2	1008	1858	33039	13138	1144
10:52	MP19505-PS1	998	1818	32471	12784	1199
10:56	MP19505-SD1	940	1704	30641	11788	1281
11:04	ZZZZZZ	978	2372 !	32947	13301	1097
11:16	MA8526-CCV2	853	1626	28169	11233	1104
11:20	MA8526-CCB2	906	1635	29702	11343	1307
11:24	ZZZZZZ	863	1574	28210	11184	1201
11:28	ZZZZZZ	881	1574	28446	11260	1205
11:32	ZZZZZZ	872	1570	28399	11199	1194
11:36	ZZZZZZ	852	1567	28085	11235	1186
11:40	ZZZZZZ	825	1503	27457	11295	1150
11:44	ZZZZZZ	792	1434	26003	11272	939
11:48	F77976-1	1051	2214 !	35044	14198	1093
11:52	MP19510-D1	1023	2186 !	34476	13924	1078
11:57	MP19510-S1	1025	2196 !	34589	14010	1075
12:01	MP19510-S2	1018	2173 !	34112	13850	1074
12:05	MA8526-CCV3	844	1640	28268	11227	1108
12:09	MA8526-CCB3	905	1656	29857	11343	1310
12:13	MP19510-P1S	1038	2226 !	34932	14013	1077

INTERNAL STANDARD SUMMARY

Login Number: F78009
Account: TETTNOAK - Tetra Tech, Inc
Project: Holloman AFB; Alamogordo, NM

File ID: SA112210M1.ICP Date Analyzed: 11/22/10 Methods: SW846 6010C
Analyst: RS Run ID: MA8526
Parameters: As,Ba,Cd,Cr,Pb,Se,Ag

Time	Sample Description	Istd#1	Istd#2	Istd#3	Istd#4	Istd#5
12:17	MP19510-SD1	894	1732	29823	11791	1195
12:21	ZZZZZZ	844	1562	27588	11052	1183
12:25	ZZZZZZ	858	1562	28116	11235	1190
12:29	ZZZZZZ	866	1577	28429	11269	1206
12:33	ZZZZZZ	853	1568	28289	11304	1199
12:37	ZZZZZZ	1160 !	2599 !	40056 !	16369 !	1029
12:41	ZZZZZZ	1079	2295 !	36316	14671 !	1091
12:46	ZZZZZZ	1110	2070 !	36726	14497 !	1171
12:50	ZZZZZZ	920	1681	30549	11839	1224
12:54	MA8526-CCV4	834	1643	28689	11282	1109
12:58	MA8526-CCB4	875	1628	30010	11504	1308
13:02	ZZZZZZ	1074	2350 !	36728	14861 !	1094
13:06	ZZZZZZ	1014	2361 !	34294	13679	1066
13:10	F77958-1	913	1870	31132	12196	1171
13:14	MP19506-D1	908	1857	30885	12207	1170
13:18	MP19506-S1	907	1911	31024	12362	1128
13:22	MP19506-S2	875	1845	30331	12242	1122
13:26	MP19506-PS1	889	1829	30357	12169	1156
13:30	MP19506-SD1	884	1702	30101	11682	1266
13:34	ZZZZZZ	922	1914	31510	12450	1175
13:38	ZZZZZZ	868	1661	29688	11822	1134
13:42	MA8526-CCV5	811	1614	28358	11345	1104
13:46	MA8526-CCB5	864	1628	29914	11628	1312
14:06	MA8526-CCV6	806	1613	28227	11257	1100
14:11	MA8526-CCB6	860	1623	29458	11490	1304
14:15	ZZZZZZ	889	1783	30698	12511	1016
14:19	ZZZZZZ	873	1675	29649	11837	1120
14:23	ZZZZZZ	888	1778	30350	11978	1166
14:27	ZZZZZZ	886	1834	30588	12065	1198
14:31	ZZZZZZ	871	1773	30007	11999	1162
14:35	ZZZZZZ	881	1800	30418	12099	1196
14:39	ZZZZZZ	885	1819	30417	12000	1192
14:43	ZZZZZZ	869	1780	30431	12541	989

INTERNAL STANDARD SUMMARY

Login Number: F78009
Account: TETTNOAK - Tetra Tech, Inc
Project: Holloman AFB; Alamogordo, NM

File ID: SA112210M1.ICP Date Analyzed: 11/22/10 Methods: SW846 6010C
Analyst: RS Run ID: MA8526
Parameters: As,Ba,Cd,Cr,Pb,Se,Ag

Time	Sample Description	Istd#1	Istd#2	Istd#3	Istd#4	Istd#5
14:47	ZZZZZZ	879	1749	30662	12278	1107
14:51	ZZZZZZ	838	1654	28861	11903	1018
14:55	MA8526-CCV7	813	1596	28040	11439	1097
14:59	MA8526-CCB7	867	1631	29458	11424	1297
15:03	ZZZZZZ	857	1639	29218	11851	1066
15:08	ZZZZZZ	921	1895	31927	12706	1163
15:12	ZZZZZZ	869	1779	30097	12162	1104
15:16	ZZZZZZ	912	1946	31578	12782	1046
15:20	ZZZZZZ	946	2028	32588	13341	1130
15:24	MP19521-MB1	857	1606	29662	11689	1303
15:29	MP19521-B1	826	1578	28248	11273	1156
15:32	F77997-1	802	1539	27519	11322	1128
15:37	MP19521-D1	794	1549	27628	11436	1125
15:41	MP19521-SD1	834	1581	28673	11387	1226
15:45	MA8526-CCV8	794	1583	28013	11232	1090
15:49	MA8526-CCB8	861	1617	29648	11581	1304
15:53	MP19521-PS1	791	1536	27231	11321	1109
15:57	MP19521-S1	776	1553	26851	10963	1065
16:01	MP19521-S2	773	1574	27290	11200	1058
16:05	ZZZZZZ	796	1538	27566	11314	1125
16:09	ZZZZZZ	853	1605	29427	11664	1297
16:17	ZZZZZZ	805	1529	27965	11328	1144
16:21	ZZZZZZ	855	1600	29901	11643	1296
16:25	ZZZZZZ	860	1618	29491	11186	1300
16:30	ZZZZZZ	867	1619	30167	11758	1311
16:34	MA8526-CCV9	811	1595	28660	11421	1108
16:38	MA8526-CCB9	849	1603	29643	11581	1303
16:42	ZZZZZZ	846	1592	29740	11577	1297
16:46	ZZZZZZ	845	1612	29816	11541	1295
16:50	ZZZZZZ	856	1611	30132	11650	1309
16:54	ZZZZZZ	839	1588	29531	11600	1295
16:58	ZZZZZZ	845	1600	29670	11603	1306
17:03	ZZZZZZ	854	1600	29876	11619	1308

INTERNAL STANDARD SUMMARY

Login Number: F78009
Account: TETTNOAK - Tetra Tech, Inc
Project: Holloman AFB; Alamogordo, NM

File ID: SA112210M1.ICP Date Analyzed: 11/22/10 Methods: SW846 6010C
Analyst: RS Run ID: MA8526
Parameters: As,Ba,Cd,Cr,Pb,Se,Ag

Time	Sample Description	Istd#1	Istd#2	Istd#3	Istd#4	Istd#5
17:07	ZZZZZZ	850	1596	29983	11692	1302
17:11	ZZZZZZ	841	1600	29819	11763	1303
17:15	ZZZZZZ	848	1594	29545	11333	1301
17:19	MP19524-MB1	858	1602	29754	11604	1302
17:23	MA8526-CCV10	813	1622	28594	11276	1101
17:27	MA8526-CCB10	844	1600	29630	11500	1287
17:31	MP19524-B1	814	1574	28479	11504	1161
17:35	F78081-3A	849	1597	29709	11659	1247
17:40	MP19524-D1	835	1572	29193	11550	1226
17:44	MP19524-SD1	842	1595	29380	11552	1281
17:48	MP19524-S1	808	1565	28119	11320	1127
17:52	MP19524-S2	810	1578	28329	11333	1121
17:56	ZZZZZZ	823	1566	28808	11405	1227
18:00	ZZZZZZ	830	1581	28623	11405	1222
18:04	ZZZZZZ	850	1597	29325	11534	1237
18:08	MP19524-D2	841	1580	29333	11614	1236
18:12	MA8526-CCV11	795	1590	28266	11364	1098
18:16	MA8526-CCB11	856	1631	29673	11482	1305
18:20	MP19524-MB2	858	1618	29960	11631	1304
18:24	MP19524-B2	804	1555	28177	11419	1137
18:28	MP19523-MB1	844	1592	29504	11630	1294
18:32	MP19523-B1	824	1585	28778	11474	1161
18:36	F78009-37	546 !	1018	19322	9341	611 !
18:40	MP19523-D1	521 !	981	18786	9267	597 !
18:45	MP19523-SD1	639	1179	22616	10517	832
18:49	MP19523-PS1	533 !	971 !	18704	9308	597 !
18:53	MP19523-S1	534 !	1005	19068	9359	588 !
18:58	MP19523-S2	519 !	1005	18791	9285	584 !
19:02	MA8526-CCV12	735	1477	26874	11482	1050
19:06	MA8526-CCB12	812	1518	29074	11942	1275
19:10	F78009-36	523 !	955 !	18856	9514	643 !
19:18	ZZZZZZ	681	1277	24861	11329	1013
19:22	ZZZZZZ	675	1241	24245	11160	965

INTERNAL STANDARD SUMMARY

Login Number: F78009
Account: TETTNOAK - Tetra Tech, Inc
Project: Holloman AFB; Alamogordo, NM

File ID: SA112210M1.ICP Date Analyzed: 11/22/10 Methods: SW846 6010C
Analyst: RS Run ID: MA8526
Parameters: As,Ba,Cd,Cr,Pb,Se,Ag

Time	Sample Description	Istd#1	Istd#2	Istd#3	Istd#4	Istd#5
19:27	ZZZZZZ	671	1228	23883	10989	931
19:31	ZZZZZZ	711	1314	25693	11397	1035
19:35	ZZZZZZ	662	1224	23976	11153	945
19:39	ZZZZZZ	719	1355	25965	11461	1062
19:43	ZZZZZZ	690	1313	25208	11202	958
19:47	ZZZZZZ	672	1271	24244	11165	955
19:51	MA8526-CCV13	707	1406	26332	11548	1017
19:55	MA8526-CCB13	765	1419	27640	11803	1228
19:59	ZZZZZZ	720	1323	25997	11415	1076
20:03	ZZZZZZ	726	1317	26340	11550	1086
20:08	ZZZZZZ	692	1288	25456	11419	1040
20:12	ZZZZZZ	701	1306	25723	11483	1074
20:16	ZZZZZZ	724	1324	26018	11462	1069
20:20	ZZZZZZ	710	1309	26092	11509	1052
20:24	ZZZZZZ	669	1231	24085	11122	937
20:28	ZZZZZZ	574	1105	21160	9909	745 !
20:33	MP19522-MB1	772	1406	27938	11850	1229
20:37	MP19522-B1	729	1375	26636	11583	1065
20:41	MA8526-CCV14	710	1409	26512	11538	1020
20:45	MA8526-CCB14	775	1443	28061	11811	1237
20:49	F78056-1	767	1416	28021	11857	1214
20:53	MP19522-D1	750	1388	27645	11856	1204
20:57	MP19522-SD1	764	1429	28042	11886	1225
21:01	MP19522-PS1	755	1413	27592	11704	1158
21:05	MP19522-S1	741	1397	26927	11542	1075
21:09	MP19522-S2	727	1385	26790	11655	1068
21:13	ZZZZZZ	743	1401	27575	11840	1201
21:17	ZZZZZZ	759	1407	27632	11745	1207
21:22	ZZZZZZ	766	1422	28167	11932	1213
21:26	ZZZZZZ	749	1389	27702	11818	1203
21:30	MA8526-CCV15	727	1413	26789	11544	1033
21:34	MA8526-CCB15	783	1455	28478	11917	1246
21:38	ZZZZZZ	752	1402	27708	11849	1200

INTERNAL STANDARD SUMMARY

Login Number: F78009
Account: TETTNOAK - Tetra Tech, Inc
Project: Holloman AFB; Alamogordo, NM

File ID: SA112210M1.ICP Date Analyzed: 11/22/10 Methods: SW846 6010C
Analyst: RS Run ID: MA8526
Parameters: As,Ba,Cd,Cr,Pb,Se,Ag

Time	Sample Description	Istd#1	Istd#2	Istd#3	Istd#4	Istd#5
21:42	ZZZZZZ	753	1392	27627	11857	1203
21:46	ZZZZZZ	745	1387	27074	11621	1151
21:51	ZZZZZZ	717	1313	26079	11464	1082
21:55	ZZZZZZ	772	1652	28707	12577	1032
21:59	ZZZZZZ	717	1448	26150	11542	913
22:03	ZZZZZZ	680	1232	24306	11203	916
22:07	ZZZZZZ	641	1163	23209	10858	878
22:11	ZZZZZZ	625	1157	22801	10733	874
22:16	ZZZZZZ	667	1230	24256	11061	963
22:20	MA8526-CCV16	733	1443	26941	11465	1042
22:24	MA8526-CCB16	781	1444	28476	11800	1242
22:28	ZZZZZZ	655	1211	23753	10966	918
22:32	ZZZZZZ	620	1146	22484	10623	852
22:37	ZZZZZZ	741	1381	27181	11597	1165
22:41	ZZZZZZ	746	1410	27778	11843	1146
22:45	ZZZZZZ	723	1379	27250	11698	1155
22:49	MP19503-D1	750	1427	27475	11668	1198
23:09	MA8526-CCV17	745	1469	27712	11657	1056
23:13	MA8526-CCB17	770	1459	28630	11938	1244

R = Reference for ISTD limits. ! = Outside limits.

LEGEND:

Istd#	Parameter	Limits
Istd#1	Yttrium (2243)	60-125 %
Istd#2	Yttrium (2422)	60-125 %
Istd#3	Yttrium (3242)	60-125 %
Istd#4	Yttrium (3710)	60-125 %
Istd#5	Indium	60-125 %

BLANK RESULTS SUMMARY
Part 1 - Initial and Continuing Calibration Blanks

Login Number: F78009
Account: TETTNOAK - Tetra Tech, Inc
Project: Holloman AFB; Alamogordo, NM

File ID: SA112210M1.ICP Date Analyzed: 11/22/10 Methods: SW846 6010C
QC Limits: result < RL Run ID: MA8526 Units: ug/l

Time:			09:42		10:14		11:20		12:09	
Sample ID:			ICB1		CCB1		CCB2		CCB3	
Metal	RL	IDL	raw	final	raw	final	raw	final	raw	final
Aluminum	200	20	anr							
Antimony	6.0	1	anr							
Arsenic	10	1	0.70	<10	1.4	<10	0.90	<10	1.7	<10
Barium	200	1	-0.10	<200	0.70	<200	1.2	<200	1.6	<200
Beryllium	4.0	.1	anr							
Cadmium	5.0	.1	0.10	<5.0	0.20	<5.0	0.30	<5.0	0.30	<5.0
Calcium	1000	50	anr							
Chromium	10	1	-0.10	<10	0.40	<10	-0.10	<10	-0.10	<10
Cobalt	50	1	anr							
Copper	25	1	anr							
Iron	300	34	anr							
Lead	5.0	1	-0.70	<5.0	-0.10	<5.0	-0.40	<5.0	0.60	<5.0
Magnesium	5000	50	anr							
Manganese	15	1	anr							
Molybdenum	50	1								
Nickel	40	1	anr							
Potassium	10000	50	anr							
Selenium	10	2	0.80	<10	4.6	<10	5.7	<10	3.1	<10
Silver	10	1	-0.20	<10	-0.20	<10	0.10	<10	0.10	<10
Sodium	10000	750	anr							
Strontium	10	1								
Thallium	10	1	anr							
Tin	50	1								
Titanium	10	1.1								
Vanadium	50	1	anr							
Zinc	20	1	anr							

(*) Outside of QC limits
(anr) Analyte not requested

BLANK RESULTS SUMMARY
Part 1 - Initial and Continuing Calibration Blanks

Login Number: F78009
Account: TETTNOAK - Tetra Tech, Inc
Project: Holloman AFB; Alamogordo, NM

File ID: SA112210M1.ICP Date Analyzed: 11/22/10 Methods: SW846 6010C
QC Limits: result < RL Run ID: MA8526 Units: ug/l

Time:			12:58		13:46		14:11		14:59	
Sample ID:			CCB4		CCB5		CCB6		CCB7	
Metal	RL	IDL	raw	final	raw	final	raw	final	raw	final
Aluminum	200	20	anr							
Antimony	6.0	1	anr							
Arsenic	10	1	2.1	<10	0.70	<10	0.60	<10	-0.10	<10
Barium	200	1	0.30	<200	0.20	<200	-0.10	<200	-0.10	<200
Beryllium	4.0	.1	anr							
Cadmium	5.0	.1	0.40	<5.0	0.40	<5.0	0.20	<5.0	0.40	<5.0
Calcium	1000	50	anr							
Chromium	10	1	0.20	<10	0.50	<10	0.40	<10	0.40	<10
Cobalt	50	1	anr							
Copper	25	1	anr							
Iron	300	34	anr							
Lead	5.0	1	-0.70	<5.0	0.0	<5.0	0.0	<5.0	0.60	<5.0
Magnesium	5000	50	anr							
Manganese	15	1	anr							
Molybdenum	50	1								
Nickel	40	1	anr							
Potassium	10000	50	anr							
Selenium	10	2	2.5	<10	4.0	<10	0.60	<10	1.2	<10
Silver	10	1	0.0	<10	-0.30	<10	-0.10	<10	-0.20	<10
Sodium	10000	750	anr							
Strontium	10	1								
Thallium	10	1	anr							
Tin	50	1								
Titanium	10	1.1								
Vanadium	50	1	anr							
Zinc	20	1	anr							

(*) Outside of QC limits
(anr) Analyte not requested

BLANK RESULTS SUMMARY
Part 1 - Initial and Continuing Calibration Blanks

Login Number: F78009
Account: TETTNOAK - Tetra Tech, Inc
Project: Holloman AFB; Alamogordo, NM

File ID: SA112210M1.ICP Date Analyzed: 11/22/10 Methods: SW846 6010C
QC Limits: result < RL Run ID: MA8526 Units: ug/l

Time:			15:49		16:38		17:27		18:16	
Sample ID:			CCB8		CCB9		CCB10		CCB11	
Metal	RL	IDL	raw	final	raw	final	raw	final	raw	final
Aluminum	200	20	anr							
Antimony	6.0	1	anr							
Arsenic	10	1	0.60	<10	0.60	<10	0.40	<10	0.0	<10
Barium	200	1	-1.2	<200	-1.5	<200	-1.6	<200	-0.40	<200
Beryllium	4.0	.1	anr							
Cadmium	5.0	.1	0.20	<5.0	0.30	<5.0	0.30	<5.0	0.20	<5.0
Calcium	1000	50	anr							
Chromium	10	1	0.30	<10	0.30	<10	0.70	<10	0.30	<10
Cobalt	50	1	anr							
Copper	25	1	anr							
Iron	300	34	anr							
Lead	5.0	1	0.10	<5.0	0.20	<5.0	0.30	<5.0	0.10	<5.0
Magnesium	5000	50	anr							
Manganese	15	1	anr							
Molybdenum	50	1								
Nickel	40	1	anr							
Potassium	10000	50	anr							
Selenium	10	2	0.0	<10	0.30	<10	1.9	<10	0.90	<10
Silver	10	1	0.0	<10	-0.40	<10	0.0	<10	-0.20	<10
Sodium	10000	750	anr							
Strontium	10	1								
Thallium	10	1	anr							
Tin	50	1								
Titanium	10	1.1								
Vanadium	50	1	anr							
Zinc	20	1	anr							

(*) Outside of QC limits
(anr) Analyte not requested

BLANK RESULTS SUMMARY
Part 1 - Initial and Continuing Calibration Blanks

Login Number: F78009
Account: TETTNOAK - Tetra Tech, Inc
Project: Holloman AFB; Alamogordo, NM

File ID: SA112210M1.ICP Date Analyzed: 11/22/10 Methods: SW846 6010C
QC Limits: result < RL Run ID: MA8526 Units: ug/l

Time:			19:06		19:55	
Sample ID:			CCB12		CCB13	
Metal	RL	IDL	raw	final	raw	final
Aluminum	200	20	anr			
Antimony	6.0	1	anr			
Arsenic	10	1	0.40	<10	0.0	<10
Barium	200	1	-2.6	<200	-3.5	<200
Beryllium	4.0	.1	anr			
Cadmium	5.0	.1	0.20	<5.0	0.10	<5.0
Calcium	1000	50	anr			
Chromium	10	1	-0.10	<10	0.20	<10
Cobalt	50	1	anr			
Copper	25	1	anr			
Iron	300	34	anr			
Lead	5.0	1	0.20	<5.0	0.20	<5.0
Magnesium	5000	50	anr			
Manganese	15	1	anr			
Molybdenum	50	1				
Nickel	40	1	anr			
Potassium	10000	50	anr			
Selenium	10	2	2.2	<10	2.5	<10
Silver	10	1	-0.20	<10	-0.10	<10
Sodium	10000	750	anr			
Strontium	10	1				
Thallium	10	1	anr			
Tin	50	1				
Titanium	10	1.1				
Vanadium	50	1	anr			
Zinc	20	1	anr			

(*) Outside of QC limits
(anr) Analyte not requested

CALIBRATION CHECK STANDARDS SUMMARY
Initial and Continuing Calibration Checks

Login Number: F78009
Account: TETTNOAK - Tetra Tech, Inc
Project: Holloman AFB; Alamogordo, NM

File ID: SA112210M1.ICP Date Analyzed: 11/22/10 Methods: SW846 6010C
QC Limits: 90 to 110 % Recovery Run ID: MA8526 Units: ug/l

Time:		09:34			10:07			11:16	
Sample ID:	ICV	ICV1		CCV	CCV1		CCV	CCV2	
Metal	True	Results	% Rec	True	Results	% Rec	True	Results	% Rec
Aluminum	anr								
Antimony	anr								
Arsenic	2000	2020	101.0	2000	2080	104.0	2000	2090	104.5
Barium	2000	2060	103.0	2000	2120	106.0	2000	2110	105.5
Beryllium	anr								
Cadmium	2000	2080	104.0	2000	2110	105.5	2000	2120	106.0
Calcium	anr								
Chromium	2000	2090	104.5	2000	2150	107.5	2000	2150	107.5
Cobalt	anr								
Copper	anr								
Iron	anr								
Lead	2000	2020	101.0	2000	2060	103.0	2000	2070	103.5
Magnesium	anr								
Manganese	anr								
Molybdenum									
Nickel	anr								
Potassium	anr								
Selenium	2000	2070	103.5	2000	2080	104.0	2000	2100	105.0
Silver	250	246	98.4	250	256	102.4	250	259	103.6
Sodium	anr								
Strontium									
Thallium	anr								
Tin									
Titanium									
Vanadium	anr								
Zinc	anr								

(*) Outside of QC limits
(anr) Analyte not requested

CALIBRATION CHECK STANDARDS SUMMARY
Initial and Continuing Calibration Checks

Login Number: F78009
Account: TETTNOAK - Tetra Tech, Inc
Project: Holloman AFB; Alamogordo, NM

File ID: SA112210M1.ICP Date Analyzed: 11/22/10 Methods: SW846 6010C
QC Limits: 90 to 110 % Recovery Run ID: MA8526 Units: ug/l

Time:		12:05			12:54			13:42	
Sample ID:	CCV	CCV3		CCV	CCV4		CCV	CCV5	
Metal	True	Results	% Rec	True	Results	% Rec	True	Results	% Rec
Aluminum	anr								
Antimony	anr								
Arsenic	2000	2090	104.5	2000	2130	106.5	2000	2170	108.5
Barium	2000	2090	104.5	2000	2100	105.0	2000	2090	104.5
Beryllium	anr								
Cadmium	2000	2120	106.0	2000	2180	109.0	2000	2200	110.0
Calcium	anr								
Chromium	2000	2120	106.0	2000	2160	108.0	2000	2160	108.0
Cobalt	anr								
Copper	anr								
Iron	anr								
Lead	2000	2040	102.0	2000	2060	103.0	2000	2030	101.5
Magnesium	anr								
Manganese	anr								
Molybdenum									
Nickel	anr								
Potassium	anr								
Selenium	2000	2120	106.0	2000	2150	107.5	2000	2200	110.0
Silver	250	253	101.2	250	254	101.6	250	250	100.0
Sodium	anr								
Strontium									
Thallium	anr								
Tin									
Titanium									
Vanadium	anr								
Zinc	anr								

(*) Outside of QC limits
(anr) Analyte not requested

CALIBRATION CHECK STANDARDS SUMMARY
Initial and Continuing Calibration Checks

Login Number: F78009
Account: TETTNOAK - Tetra Tech, Inc
Project: Holloman AFB; Alamogordo, NM

File ID: SA112210M1.ICP Date Analyzed: 11/22/10 Methods: SW846 6010C
QC Limits: 90 to 110 % Recovery Run ID: MA8526 Units: ug/l

Time:		14:06			14:55			15:45	
Sample ID:	CCV	CCV6		CCV	CCV7		CCV	CCV8	
Metal	True	Results	% Rec	True	Results	% Rec	True	Results	% Rec
Aluminum	anr								
Antimony	anr								
Arsenic	2000	2030	101.5	2000	2010	100.5	2000	2050	102.5
Barium	2000	2060	103.0	2000	2040	102.0	2000	2090	104.5
Beryllium	anr								
Cadmium	2000	2070	103.5	2000	2040	102.0	2000	2080	104.0
Calcium	anr								
Chromium	2000	2100	105.0	2000	2110	105.5	2000	2110	105.5
Cobalt	anr								
Copper	anr								
Iron	anr								
Lead	2000	2020	101.0	2000	2020	101.0	2000	2010	100.5
Magnesium	anr								
Manganese	anr								
Molybdenum									
Nickel	anr								
Potassium	anr								
Selenium	2000	2040	102.0	2000	2020	101.0	2000	2070	103.5
Silver	250	252	100.8	250	254	101.6	250	252	100.8
Sodium	anr								
Strontium									
Thallium	anr								
Tin									
Titanium									
Vanadium	anr								
Zinc	anr								

(*) Outside of QC limits
(anr) Analyte not requested

CALIBRATION CHECK STANDARDS SUMMARY
Initial and Continuing Calibration Checks

Login Number: F78009
Account: TETTNOAK - Tetra Tech, Inc
Project: Holloman AFB; Alamogordo, NM

File ID: SA112210M1.ICP Date Analyzed: 11/22/10 Methods: SW846 6010C
QC Limits: 90 to 110 % Recovery Run ID: MA8526 Units: ug/l

Time:		16:34			17:23			18:12	
Sample ID:	CCV	CCV9		CCV	CCV10		CCV	CCV11	
Metal	True	Results	% Rec	True	Results	% Rec	True	Results	% Rec
Aluminum	anr								
Antimony	anr								
Arsenic	2000	2010	100.5	2000	2010	100.5	2000	2030	101.5
Barium	2000	2060	103.0	2000	2070	103.5	2000	2060	103.0
Beryllium	anr								
Cadmium	2000	2050	102.5	2000	2050	102.5	2000	2060	103.0
Calcium	anr								
Chromium	2000	2100	105.0	2000	2090	104.5	2000	2090	104.5
Cobalt	anr								
Copper	anr								
Iron	anr								
Lead	2000	2000	100.0	2000	2010	100.5	2000	1980	99.0
Magnesium	anr								
Manganese	anr								
Molybdenum									
Nickel	anr								
Potassium	anr								
Selenium	2000	2020	101.0	2000	2010	100.5	2000	2060	103.0
Silver	250	248	99.2	250	251	100.4	250	247	98.8
Sodium	anr								
Strontium									
Thallium	anr								
Tin									
Titanium									
Vanadium	anr								
Zinc	anr								

(*) Outside of QC limits
(anr) Analyte not requested

CALIBRATION CHECK STANDARDS SUMMARY
Initial and Continuing Calibration Checks

Login Number: F78009
Account: TETTNOAK - Tetra Tech, Inc
Project: Holloman AFB; Alamogordo, NM

File ID: SA112210M1.ICP Date Analyzed: 11/22/10 Methods: SW846 6010C
QC Limits: 90 to 110 % Recovery Run ID: MA8526 Units: ug/l

Time:		19:02			19:51	
Sample ID:	CCV	CCV12		CCV	CCV13	
Metal	True	Results	% Rec	True	Results	% Rec
Aluminum	anr					
Antimony	anr					
Arsenic	2000	2100	105.0	2000	2120	106.0
Barium	2000	2170	108.5	2000	2220	111.0*(a
Beryllium	anr					
Cadmium	2000	2060	103.0	2000	2030	101.5
Calcium	anr					
Chromium	2000	2100	105.0	2000	2100	105.0
Cobalt	anr					
Copper	anr					
Iron	anr					
Lead	2000	1920	96.0	2000	1900	95.0
Magnesium	anr					
Manganese	anr					
Molybdenum						
Nickel	anr					
Potassium	anr					
Selenium	2000	2130	106.5	2000	2160	108.0
Silver	250	246	98.4	250	248	99.2
Sodium	anr					
Strontium						
Thallium	anr					
Tin						
Titanium						
Vanadium	anr					
Zinc	anr					

(*) Outside of QC limits
(anr) Analyte not requested
(a) No samples for Ba reported in the area bracketed by this QC.

HIGH STANDARD CHECK SUMMARY

Login Number: F78009
Account: TETTNOAK - Tetra Tech, Inc
Project: Holloman AFB; Alamogordo, NM

File ID: SA112210M1.ICP Date Analyzed: 11/22/10 Methods: SW846 6010C
QC Limits: 95 to 105 % Recovery Run ID: MA8526 Units: ug/l

Time:		09:30	
Sample ID:	HSTD	HSTD1	
Metal	True	Results	% Rec
Aluminum	anr		
Antimony	anr		
Arsenic	4000	4100	102.5
Barium	4000	4000	100.0
Beryllium	anr		
Cadmium	4000	4060	101.5
Calcium	anr		
Chromium	4000	3960	99.0
Cobalt	anr		
Copper	anr		
Iron	anr		
Lead	4000	4060	101.5
Magnesium	anr		
Manganese	anr		
Molybdenum			
Nickel	anr		
Potassium	anr		
Selenium	4000	4100	102.5
Silver	500	504	100.8
Sodium	anr		
Strontium			
Thallium	anr		
Tin			
Titanium			
Vanadium	anr		
Zinc	anr		

(*) Outside of QC limits
(anr) Analyte not requested

LOW CALIBRATION CHECK STANDARDS SUMMARY

Login Number: F78009
Account: TETTNOAK - Tetra Tech, Inc
Project: Holloman AFB; Alamogordo, NM

File ID: SA112210M1.ICP Date Analyzed: 11/22/10 Methods: SW846 6010C
QC Limits: CRI 70-130% CRIA 70-130% Run ID: MA8526 Units: ug/l

Time:			09:45	
Sample ID:	CRI	CRIA	CRIA1	
Metal	True	True	Results	% Rec
Aluminum	400	200	anr	
Antimony	10	5.0	anr	
Arsenic	20	10	9.6	96.0
Barium	400	200	204	102.0
Beryllium	10	5.0	anr	
Cadmium	10	5.0	5.3	106.0
Calcium	2000	1000	anr	
Chromium	20	10	11.1	111.0
Cobalt	100	50	anr	
Copper	50	25	anr	
Iron	600	300	anr	
Lead	10	5.0	4.0	80.0
Magnesium	10000	5000	anr	
Manganese	30	15	anr	
Molybdenum	100	50		
Nickel	80	40	anr	
Potassium	20000	10000	anr	
Selenium	20	10	13.0	130.0
Silver	20	10	9.4	94.0
Sodium	20000	10000	anr	
Strontium	20	10		
Thallium	20	10	anr	
Tin	100	50		
Titanium	20	10		
Vanadium	100	50	anr	
Zinc	40	20	anr	

(*) Outside of QC limits
(anr) Analyte not requested

INTERFERING ELEMENT CHECK STANDARDS SUMMARY
Part 1 - ICSA and ICSAB Standards

Login Number: F78009
Account: TETTNOAK - Tetra Tech, Inc
Project: Holloman AFB; Alamogordo, NM

File ID: SA112210M1.ICP Date Analyzed: 11/22/10 Methods: SW846 6010C
QC Limits: 80 to 120 % Recovery Run ID: MA8526 Units: ug/l

Time:			09:55		10:02	
Sample ID:	ICSA	ICSAB	ICSA1		ICSAB1	
Metal	True	True	Results	% Rec	Results	% Rec
Aluminum	500000	500000	494000	98.8	493000	98.6
Antimony		1000	-0.10		994	99.4
Arsenic		1000	0.90		1020	102.0
Barium		500	2.2		509	101.8
Beryllium		500	0.0		476	95.2
Cadmium		1000	0.0		932	93.2
Calcium	500000	500000	457000	91.4	446000	89.2
Chromium		500	-0.40		425	85.0
Cobalt		500	0.50		487	97.4
Copper		500	1.8		498	99.6
Iron	200000	200000	186000	93.0	181000	90.5
Lead		1000	0.20		969	96.9
Magnesium	500000	500000	512000	102.4	501000	100.2
Manganese		500	0.40		438	87.6
Molybdenum		1000	-0.50		958	95.8
Nickel		1000	0.0		970	97.0
Potassium			-17		-19	
Selenium		1000	0.0		997	99.7
Silver		1000	1.0		1090	109.0
Sodium			-780		-820	
Strontium		1000	-5.7		-5.5	0.0
Thallium		1000	0.0		928	92.8
Tin		1000	5.9		906	90.6
Titanium		1000	2.7		3.5	0.4
Vanadium		500	-0.40		437	87.4
Zinc		1000	-4.5		881	88.1

(*) Outside of QC limits
(anr) Analyte not requested

Accutest Laboratories Instrument Runlog
Inorganics Analyses

Login Number: F78009
Account: TETTNOAK - Tetra Tech, Inc
Project: Holloman AFB; Alamogordo, NM

File ID: SA112310M1.ICP Date Analyzed: 11/23/10 Methods: SW846 6010C
Analyst: RS Run ID: MA8530
Parameters: As,Ba,Cd,Cr,Pb,Se,Ag

Time	Sample Description	Dilution Factor	PS Recov	Comments
09:19	MA8530-STD1	1		STDA
09:22	MA8530-STD2	1		STDB
09:25	MA8530-STD3	1		STDC
09:29	MA8530-HSTD1	1		
09:33	MA8530-ICV1	1		
09:40	MA8530-ICB1	1		
09:52	MA8530-ICB2	1		
09:55	MA8530-CRIA1	1		
10:19	MA8530-ICSA1	1		
10:30	MA8530-ICSAB1	1		
10:34	MA8530-CCV1	1		
10:42	MA8530-CCB1	1		
10:57	MP19524-MB2	1		
11:01	MP19524-B2	1		
11:05	ZZZZZZ	20		
11:09	ZZZZZZ	5		
11:13	F77976-1	40		(sample used for QC only; not part of login F78009)
11:17	MP19510-D1	40		
11:21	MP19510-S1	40		
11:25	MP19510-S2	40		
11:29	MP19510-P1S	40		
11:33	MP19510-SD1	200		
11:37	MA8530-CCV2	1		
11:41	MA8530-CCB2	1		
11:45	ZZZZZZ	20		
11:49	ZZZZZZ	20		
11:53	ZZZZZZ	40		
11:57	F77997-1	2		(sample used for QC only; not part of login F78009)
12:01	MP19521-D1	2		
12:05	MP19521-S1	2		
12:09	MP19521-S2	2		
12:13	MP19521-PS1	2		
12:17	MP19521-SD1	10		

Accutest Laboratories Instrument Runlog
Inorganics Analyses

Login Number: F78009
Account: TETTNOAK - Tetra Tech, Inc
Project: Holloman AFB; Alamogordo, NM

File ID: SA112310M1.ICP Date Analyzed: 11/23/10 Methods: SW846 6010C
Analyst: RS Run ID: MA8530
Parameters: As,Ba,Cd,Cr,Pb,Se,Ag

Time	Sample Description	Dilution Factor	PS Recov	Comments
12:25	MA8530-CCV3	1		
12:29	MA8530-CCB3	1		
12:34	F78009-37	100		
12:38	MP19523-D1	100		
12:42	MP19523-S1	100		
12:46	MP19523-S2	100		
12:50	MP19523-PS1	100		
12:54	MP19523-SD1	500		
12:58	F78009-37	5		
13:03	MP19523-D1	5		
13:07	MP19523-S1	5		
13:11	MP19523-S2	5		
13:16	MA8530-CCV4	1		
13:19	MA8530-CCB4	1		
13:24	MP19523-PS1	5		
13:28	MP19523-SD1	25		
13:32	F78009-36	5		
13:36	ZZZZZZ	5		
13:41	MP19522-MB1	1		
13:45	MP19522-B1	1		
13:49	F78056-1	1		(sample used for QC only; not part of login F78009)
13:53	MP19522-D1	1		
13:57	MP19522-SD1	5		
14:01	MP19522-PS1	1		
14:05	MA8530-CCV5	1		
14:09	MA8530-CCB5	1		
14:13	MP19522-S1	1		
14:17	MP19522-S2	1		
14:21	ZZZZZZ	1		
14:25	ZZZZZZ	1		
14:29	ZZZZZZ	1		
14:33	ZZZZZZ	1		
14:37	ZZZZZZ	1		

Accutest Laboratories Instrument Runlog
Inorganics Analyses

Login Number: F78009
Account: TETTNOAK - Tetra Tech, Inc
Project: Holloman AFB; Alamogordo, NM

File ID: SA112310M1.ICP Date Analyzed: 11/23/10 Methods: SW846 6010C
Analyst: RS Run ID: MA8530
Parameters: As,Ba,Cd,Cr,Pb,Se,Ag

Time	Sample Description	Dilution Factor	PS Recov	Comments
14:42	ZZZZZZ	1		
14:50	MP19530-MB1	1		
14:54	MA8530-CCV6	1		
14:58	MA8530-CCB6	1		
15:02	MP19530-B1	1		
15:06	F78156-14	1		(sample used for QC only; not part of login F78009)
15:10	MP19530-D1	1		
15:15	MP19530-SD1	5		
15:19	MP19530-PS1	1		
15:23	MP19530-S1	1		
15:27	MP19530-S2	1		
15:31	ZZZZZZ	1		
15:35	ZZZZZZ	1		
15:40	ZZZZZZ	1		
15:44	MA8530-CCV7	1		
15:48	MA8530-CCB7	1		
16:05	MA8530-CCV8	1		
16:10	MA8530-CCB8	1		
16:13	ZZZZZZ	1		
16:17	ZZZZZZ	1		
16:22	ZZZZZZ	1		
16:26	ZZZZZZ	1		
16:30	MP19516-MB1	1		
16:34	MP19516-B1	1		
16:38	F78156-6	1		(sample used for QC only; not part of login F78009)
16:42	MP19516-D1	1		
16:46	MP19516-SD1	5		
16:50	MP19516-PS1	1		
16:57	MA8530-CCV9	1		
17:01	MA8530-CCB9	1		
17:18	ZZZZZZ	1		
17:27	ZZZZZZ	1		
17:35	MP19516-S1	1		

Accutest Laboratories Instrument Runlog
Inorganics Analyses

Login Number: F78009
Account: TETTNOAK - Tetra Tech, Inc
Project: Holloman AFB; Alamogordo, NM

File ID: SA112310M1.ICP Date Analyzed: 11/23/10 Methods: SW846 6010C
Analyst: RS Run ID: MA8530
Parameters: As,Ba,Cd,Cr,Pb,Se,Ag

Time	Sample Description	Dilution Factor	PS Recov	Comments
17:40	MP19516-S2	1		
17:44	ZZZZZZ	1		
17:48	MA8530-CCV10	1		
17:52	MA8530-CCB10	1		
17:56	ZZZZZZ	1		
18:00	ZZZZZZ	1		
18:04	ZZZZZZ	1		
18:08	ZZZZZZ	1		
18:13	ZZZZZZ	1		
18:17	ZZZZZZ	1		
18:21	ZZZZZZ	1		
18:25	ZZZZZZ	1		
18:30	ZZZZZZ	1		
18:34	ZZZZZZ	1		
18:38	MA8530-CCV11	1		
18:42	MA8530-CCB11	1		
18:46	ZZZZZZ	1		
18:51	ZZZZZZ	1		
18:55	ZZZZZZ	1		
18:59	ZZZZZZ	1		
19:03	ZZZZZZ	1		
19:07	ZZZZZZ	1		
19:11	ZZZZZZ	1		
19:15	ZZZZZZ	1		
19:20	MP19515-MB1	1		
19:24	MP19515-B1	1		
19:28	MA8530-CCV12	1		
19:32	MA8530-CCB12	1		
19:36	F77971-4A	1		(sample used for QC only; not part of login F78009)
19:40	MP19515-D1	1		
19:44	MP19515-SD1	5		
19:48	MP19515-PS1	1		
19:52	MP19515-S1	1		

Accutest Laboratories Instrument Runlog
Inorganics Analyses

Login Number: F78009
Account: TETTNOAK - Tetra Tech, Inc
Project: Holloman AFB; Alamogordo, NM

File ID: SA112310M1.ICP Date Analyzed: 11/23/10 Methods: SW846 6010C
Analyst: RS Run ID: MA8530
Parameters: As,Ba,Cd,Cr,Pb,Se,Ag

Time	Sample Description	Dilution Factor	PS Recov	Comments
19:56	MP19515-S2	1		
19:59	ZZZZZZ	1		
20:03	ZZZZZZ	1		
20:07	ZZZZZZ	1		
20:12	ZZZZZZ	1		
20:16	MA8530-CCV13	1		
20:20	MA8530-CCB13	1		
20:24	ZZZZZZ	1		
20:28	ZZZZZZ	1		
20:33	ZZZZZZ	1		
20:37	ZZZZZZ	1		
20:41	ZZZZZZ	1		
20:46	ZZZZZZ	1		
20:50	ZZZZZZ	1		
20:54	ZZZZZZ	1		
20:58	ZZZZZZ	1		
21:03	ZZZZZZ	1		
21:07	MA8530-CCV14	1		
21:11	MA8530-CCB14	1		
21:15	ZZZZZZ	1		
21:19	ZZZZZZ	1		
21:23	ZZZZZZ	1		
21:28	ZZZZZZ	1		
21:32	MP19533-MB1	1		
21:36	MP19533-B1	1		
21:40	F78220-1	1		(sample used for QC only; not part of login F78009)
21:44	MP19533-D1	1		
21:48	MP19533-SD1	1		
21:52	MP19533-S1	1		
21:56	MA8530-CCV15	1		
22:00	MA8530-CCB15	1		
22:04	MP19533-S2	1		
22:08	ZZZZZZ	1		

Accutest Laboratories Instrument Runlog
Inorganics Analyses

Login Number: F78009
Account: TETTNOAK - Tetra Tech, Inc
Project: Holloman AFB; Alamogordo, NM

File ID: SA112310M1.ICP Date Analyzed: 11/23/10 Methods: SW846 6010C
Analyst: RS Run ID: MA8530
Parameters: As,Ba,Cd,Cr,Pb,Se,Ag

Time	Sample Description	Dilution Factor	PS Recov	Comments
22:13	ZZZZZZ	1		
22:17	MP19533-MB2	1		
22:21	MP19533-B2	1		
22:25	MP19533-MB3	1		
22:29	MP19533-B3	1		
22:33	MP19532-MB1	1		
22:37	MP19532-B1	1		
22:41	F78274-1	1		(sample used for QC only; not part of login F78009)
22:45	MA8530-CCV16	1		
22:49	MA8530-CCB16	1		
22:53	MP19532-D1	1		
22:58	MP19532-SD1	5		
23:02	MP19532-PS1	1		
23:06	MP19532-S1	1		
23:10	MP19532-S2	1		
23:14	ZZZZZZ	1		
23:18	ZZZZZZ	1		
23:22	ZZZZZZ	1		
23:26	ZZZZZZ	1		
23:31	ZZZZZZ	1		
23:35	MA8530-CCV17	1		
23:39	MA8530-CCB17	1		
23:43	ZZZZZZ	1		
23:47	MP19534-MB1	1		
23:51	MP19534-B1	1		
23:55	F78050-1	1		(sample used for QC only; not part of login F78009)
23:59	MP19534-D1	1		
00:04	MP19534-SD1	5		
00:08	MP19534-PS1	1		
00:12	MP19534-S1	1		
00:16	MP19534-S2	1		
00:20	ZZZZZZ	1		
00:24	MA8530-CCV18	1		

Accutest Laboratories Instrument Runlog
Inorganics Analyses

Login Number: F78009
Account: TETTNOAK - Tetra Tech, Inc
Project: Holloman AFB; Alamogordo, NM

File ID: SA112310M1.ICP Date Analyzed: 11/23/10 Methods: SW846 6010C
Analyst: RS Run ID: MA8530
Parameters: As,Ba,Cd,Cr,Pb,Se,Ag

Time	Sample Description	Dilution Factor	PS Recov	Comments
00:28	MA8530-CCB18	1		
00:32	ZZZZZZ	1		
00:36	ZZZZZZ	1		
00:40	ZZZZZZ	1		
00:44	ZZZZZZ	1		
00:48	ZZZZZZ	1		
00:53	ZZZZZZ	1		
00:57	ZZZZZZ	1		
01:01	ZZZZZZ	1		
01:05	ZZZZZZ	1		
01:09	ZZZZZZ	1		
01:13	MA8530-CCV19	1		
01:17	MA8530-CCB19	1		
01:22	ZZZZZZ	1		
01:26	ZZZZZZ	1		
01:30	ZZZZZZ	1		
01:34	ZZZZZZ	1		
01:38	ZZZZZZ	1		
01:42	ZZZZZZ	1		
01:47	ZZZZZZ	1		
01:51	ZZZZZZ	1		
01:55	MP19534-MB2A	1		
01:59	MP19535-MB1	1		
02:04	MA8530-CCV20	1		
02:08	MA8530-CCB20	1		
02:12	MP19535-B1	1		
02:16	F78009-36F	1		
02:20	MP19535-D1	1		
02:24	MP19535-SD1	5		
02:29	MP19535-PS1	1		
02:33	MP19535-S1	1		
02:37	MP19535-S2	1		
02:42	F78009-37F	1		

----------> Last reportable sample/prep for job F78009

Accutest Laboratories Instrument Runlog
Inorganics Analyses

Login Number: F78009
Account: TETTNOAK - Tetra Tech, Inc
Project: Holloman AFB; Alamogordo, NM

File ID: SA112310M1.ICP Date Analyzed: 11/23/10 Methods: SW846 6010C
Analyst: RS Run ID: MA8530
Parameters: As,Ba,Cd,Cr,Pb,Se,Ag

	Time	Sample Description	Dilution Factor	PS Recov	Comments
	02:54	MA8530-CCV21	1		
	02:58	MA8530-CCB21	1		
---------->	Last reportable CCB for job F78009				
	Refer to raw data for calibration curve and standards.				

INTERNAL STANDARD SUMMARY

Login Number: F78009
Account: TETTNOAK - Tetra Tech, Inc
Project: Holloman AFB; Alamogordo, NM

File ID: SA112310M1.ICP Date Analyzed: 11/23/10 Methods: SW846 6010C
Analyst: RS Run ID: MA8530
Parameters: As,Ba,Cd,Cr,Pb,Se,Ag

Time	Sample Description	Istd#1	Istd#2	Istd#3	Istd#4	Istd#5
09:19	MA8530-STD1	1758	1430	27658	13202	1160
09:22	MA8530-STD2	1682	1404	26677	13020	1002
09:25	MA8530-STD3	1624	1418	26047	12833	938
09:29	MA8530-HSTD1	1595	1401	25523	12710	929
09:33	MA8530-ICV1	1661	1400	26291	12960	1000
09:40	MA8530-ICB1	1733 R	1406 R	27590 R	13276 R	1154 R
09:52	MA8530-ICB2	1751	1400	999999	13247	1158
09:55	MA8530-CRIA1	1720	1389	27045	13195	1116
10:19	MA8530-ICSA1	1499	1422	23590	12059	831
10:30	MA8530-ICSAB1	1481	1373	23541	12198	820
10:34	MA8530-CCV1	1640	1386	25900	12822	989
10:42	MA8530-CCB1	1742	1411	27518	13285	1161
10:57	MP19524-MB2	1732	1387	27460	13404	1152
11:01	MP19524-B2	1653	1363	26159	12953	1037
11:05	ZZZZZZ	2072	1739	33231	16294	1055
11:09	ZZZZZZ	1748	1713	27822	13815	1047
11:13	F77976-1	1806	1577	28405	13783	1079
11:17	MP19510-D1	1822	1568	28667	13911	1086
11:21	MP19510-S1	1797	1566	28500	13919	1079
11:25	MP19510-S2	1784	1552	28356	13885	1070
11:29	MP19510-P1S	1804	1581	28396	13883	1079
11:33	MP19510-SD1	1764	1463	27786	13332	1142
11:37	MA8530-CCV2	1631	1406	26122	12802	996
11:41	MA8530-CCB2	1705	1412	27004	13058	1155
11:45	ZZZZZZ	2036	1881 !	32187	15825	1014
11:49	ZZZZZZ	1933	1731	30619	14901	1040
11:53	ZZZZZZ	1720	1441	27460	13259	1090
11:57	F77997-1	1633	1362	25907	12925	1058
12:01	MP19521-D1	1637	1369	25661	12914	1061
12:05	MP19521-S1	1635	1378	25717	12782	1029
12:09	MP19521-S2	1646	1403	26057	12903	1034
12:13	MP19521-PS1	1638	1346	25811	12990	1049
12:17	MP19521-SD1	1702	1406	26945	13087	1131

INTERNAL STANDARD SUMMARY

Login Number: F78009
Account: TETTNOAK - Tetra Tech, Inc
Project: Holloman AFB; Alamogordo, NM

File ID: SA112310M1.ICP Date Analyzed: 11/23/10 Methods: SW846 6010C
Analyst: RS Run ID: MA8530
Parameters: As,Ba,Cd,Cr,Pb,Se,Ag

Time	Sample Description	Istd#1	Istd#2	Istd#3	Istd#4	Istd#5
12:25	MA8530-CCV3	1628	1395	26046	12921	998
12:29	MA8530-CCB3	1725	1420	27188	13078	1158
12:34	F78009-37	1658	1366	26014	12807	1067
12:38	MP19523-D1	1673	1357	26279	12939	1070
12:42	MP19523-S1	1640	1334	26040	12879	1057
12:46	MP19523-S2	1651	1355	26003	12896	1064
12:50	MP19523-PS1	1655	1366	25865	12751	1069
12:54	MP19523-SD1	1708	1414	26862	13027	1133
12:58	F78009-37	1376	1123	21691	11678	790
13:03	MP19523-D1	1390	1131	21913	11749	796
13:07	MP19523-S1	1381	1125	21817	11697	783
13:11	MP19523-S2	1350	1106	21518	11695	771
13:16	MA8530-CCV4	1586	1339	25533	12818	978
13:19	MA8530-CCB4	1703	1388	27086	13219	1155
13:24	MP19523-PS1	1358	1104	21774	11751	778
13:28	MP19523-SD1	1520	1232	24295	12551	949
13:32	F78009-36	1352	1090	21649	11811	812
13:36	ZZZZZZ	1623	1332	26194	13081	1068
13:41	MP19522-MB1	1642	1340	27045	13313	1133
13:45	MP19522-B1	1566	1306	25196	12977	1012
13:49	F78056-1	1650	1359	26785	13194	1131
13:53	MP19522-D1	1673	1357	27101	13321	1141
13:57	MP19522-SD1	1665	1364	27082	13289	1142
14:01	MP19522-PS1	1603	1324	26395	13170	1075
14:05	MA8530-CCV5	1591	1361	25877	12901	989
14:09	MA8530-CCB5	1675	1373	27053	13257	1150
14:13	MP19522-S1	1567	1315	25412	12889	1005
14:17	MP19522-S2	1588	1344	25698	12929	1016
14:21	ZZZZZZ	1655	1361	999999 !	13345	1136
14:25	ZZZZZZ	1633	1341	26946	13312	1126
14:29	ZZZZZZ	1621	1344	26506	13184	1122
14:33	ZZZZZZ	1641	1336	26605	13154	1129
14:37	ZZZZZZ	1654	1340	26922	13317	1132

INTERNAL STANDARD SUMMARY

Login Number: F78009
Account: TETTNOAK - Tetra Tech, Inc
Project: Holloman AFB; Alamogordo, NM

File ID: SA112310M1.ICP Date Analyzed: 11/23/10 Methods: SW846 6010C
Analyst: RS Run ID: MA8530
Parameters: As,Ba,Cd,Cr,Pb,Se,Ag

Time	Sample Description	Istd#1	Istd#2	Istd#3	Istd#4	Istd#5
14:42	ZZZZZZ	1530	1253	24730	12767	1015
14:50	MP19530-MB1	1642	1313	26211	12850	1123
14:54	MA8530-CCV6	1613	1378	26388	13050	994
14:58	MA8530-CCB6	1652	1361	26919	13130	1137
15:02	MP19530-B1	1579	1304	25160	12542	1013
15:06	F78156-14	1933	1827 !	31455	15625	967
15:10	MP19530-D1	2029	1926 !	33130	16381	966
15:15	MP19530-SD1	1727	1515	28457	13963	1081
15:19	MP19530-PS1	1911	1816 !	30929	15486	959
15:23	MP19530-S1	1926	1885 !	31463	15570	932
15:27	MP19530-S2	1950	1869 !	31671	15651	936
15:31	ZZZZZZ	2224 !	2186 !	36591 !	17947 !	939
15:35	ZZZZZZ	2067	2016 !	34187	16911 !	927
15:40	ZZZZZZ	2019	1955 !	32937	16388	958
15:44	MA8530-CCV7	1629	1405	26577	12989	1011
15:48	MA8530-CCB7	1714	1418	27709	13224	1176
16:05	MA8530-CCV8	1575	1354	25792	12766	992
16:10	MA8530-CCB8	1659	1378	26834	13096	1151
16:13	ZZZZZZ	1955	1845 !	31601	15738	968
16:17	ZZZZZZ	2036	1971 !	33445	16387	957
16:22	ZZZZZZ	2023	1953 !	33331	16447	962
16:26	ZZZZZZ	1816	1764 !	29859	14927	811
16:30	MP19516-MB1	1666	1358	26698	12864	1146
16:34	MP19516-B1	1622	1340	26033	12681	1038
16:38	F78156-6	2089	2012 !	34168	16808 !	961
16:42	MP19516-D1	1851	1930 !	33079	16707 !	859
16:46	MP19516-SD1	1771	1563	28722	14031	1092
16:50	MP19516-PS1	1869	1928 !	32984	16644 !	864
16:57	MA8530-CCV9	1602	1396	26239	12885	1000
17:01	MA8530-CCB9	1679	1387	27277	13203	1161
17:18	ZZZZZZ	1641	1346	26863	13259	1123
17:27	ZZZZZZ	1906	1574	30408	15281	913
17:35	MP19516-S1	2114	2045 !	34699 !	17198 !	894

INTERNAL STANDARD SUMMARY

Login Number: F78009
Account: TETTNOAK - Tetra Tech, Inc
Project: Holloman AFB; Alamogordo, NM

File ID: SA112310M1.ICP Date Analyzed: 11/23/10 Methods: SW846 6010C
Analyst: RS Run ID: MA8530
Parameters: As,Ba,Cd,Cr,Pb,Se,Ag

Time	Sample Description	Istd#1	Istd#2	Istd#3	Istd#4	Istd#5
17:40	MP19516-S2	2042	2006 !	33232	16455	908
17:44	ZZZZZZ	2049	1937 !	32720	16116	986
17:48	MA8530-CCV10	1670	1434	26690	12998	1020
17:52	MA8530-CCB10	1743	1427	27756	13275	1174
17:56	ZZZZZZ	2065	1975 !	33266	16451	967
18:00	ZZZZZZ	2015	1925 !	32570	16041	955
18:04	ZZZZZZ	2101	2020 !	33557	16487	959
18:08	ZZZZZZ	2147	2078 !	34483	16856 !	955
18:13	ZZZZZZ	2103	2061 !	34157	16880 !	933
18:17	ZZZZZZ	2338 !	2296 !	37759 !	18642 !	883
18:21	ZZZZZZ	2303 !	2262 !	36366 !	17706 !	952
18:25	ZZZZZZ	2208 !	2150 !	35479 !	17601 !	885
18:30	ZZZZZZ	2243 !	2193 !	36157 !	17811 !	920
18:34	ZZZZZZ	1975	1869 !	32013	15796	979
18:38	MA8530-CCV11	1654	1432	26422	12851	1013
18:42	MA8530-CCB11	1749	1443	27850	13271	1180
18:46	ZZZZZZ	1915	1787 !	30931	15362	888
18:51	ZZZZZZ	1996	1893 !	31936	15714	971
18:55	ZZZZZZ	2073	2065 !	33320	16422	934
18:59	ZZZZZZ	2211 !	2150 !	35249 !	17302 !	944
19:03	ZZZZZZ	2172 !	2089 !	34834 !	17086 !	947
19:07	ZZZZZZ	2091	1959 !	33291	16303	979
19:11	ZZZZZZ	2016	1879 !	32240	15943	975
19:15	ZZZZZZ	2068	1941 !	32880	16215	981
19:20	MP19515-MB1	1725	1402	27158	12864	1161
19:24	MP19515-B1	1649	1357	25944	12636	1038
19:28	MA8530-CCV12	1654	1420	26395	12909	1011
19:32	MA8530-CCB12	1707	1408	27247	13146	1163
19:36	F77971-4A	1695	1569	26674	13089	1076
19:40	MP19515-D1	1726	1491	26905	12962	1106
19:44	MP19515-SD1	1760	1486	27861	13303	1156
19:48	MP19515-PS1	1696	1574	26529	13012	1059
19:52	MP19515-S1	1591	1651	25301	12568	984

INTERNAL STANDARD SUMMARY

Login Number: F78009
Account: TETTNOAK - Tetra Tech, Inc
Project: Holloman AFB; Alamogordo, NM

File ID: SA112310M1.ICP Date Analyzed: 11/23/10 Methods: SW846 6010C
Analyst: RS Run ID: MA8530
Parameters: As,Ba,Cd,Cr,Pb,Se,Ag

Time	Sample Description	Istd#1	Istd#2	Istd#3	Istd#4	Istd#5
19:56	MP19515-S2	1649	1423	25882	12647	1024
19:59	ZZZZZZ	1764	1538	27881	13443	1072
20:03	ZZZZZZ	1737	1518	27424	13323	1081
20:07	ZZZZZZ	1754	1467	27661	13185	1124
20:12	ZZZZZZ	1775	1537	28006	13635	917
20:16	MA8530-CCV13	1679	1439	26736	12973	1018
20:20	MA8530-CCB13	1735	1427	27599	13115	1171
20:24	ZZZZZZ	1795	1652	28823	14325	846
20:28	ZZZZZZ	1821	1672	28891	14435	900
20:33	ZZZZZZ	1819	1673	29166	14371	891
20:37	ZZZZZZ	1794	1637	28547	14377	876
20:41	ZZZZZZ	1752	1544	27912	13808	910
20:46	ZZZZZZ	1788	1557	28124	13689	950
20:50	ZZZZZZ	1741	1506	27584	13422	975
20:54	ZZZZZZ	1765	1612	28862	14671	775
20:58	ZZZZZZ	1775	1722	29169	14699	779
21:03	ZZZZZZ	2121	2274 !	33879	16509	897
21:07	MA8530-CCV14	1671	1432	26835	12885	1018
21:11	MA8530-CCB14	1711	1416	27490	13107	1165
21:15	ZZZZZZ	2232 !	2388 !	36274 !	17948 !	857
21:19	ZZZZZZ	2211 !	2212 !	34948 !	16848 !	956
21:23	ZZZZZZ	2181 !	2282 !	34918 !	16915 !	920
21:28	ZZZZZZ	2543 !	2679 !	41563 !	20515 !	845
21:32	MP19533-MB1	1714	1415	27618	13304	1168
21:36	MP19533-B1	1619	1371	25971	12765	1041
21:40	F78220-1	1653	1368	26665	12952	1135
21:44	MP19533-D1	1677	1366	26874	12952	1142
21:48	MP19533-SD1	1729	1418	27532	13083	1170
21:52	MP19533-S1	1602	1335	25862	12758	1027
21:56	MA8530-CCV15	1591	1376	25743	12548	991
22:00	MA8530-CCB15	1684	1389	27050	12949	1153
22:04	MP19533-S2	1589	1327	25481	12660	1021
22:08	ZZZZZZ	1441	1217	23699	12248	925

INTERNAL STANDARD SUMMARY

Login Number: F78009
Account: TETTNOAK - Tetra Tech, Inc
Project: Holloman AFB; Alamogordo, NM

File ID: SA112310M1.ICP Date Analyzed: 11/23/10 Methods: SW846 6010C
Analyst: RS Run ID: MA8530
Parameters: As,Ba,Cd,Cr,Pb,Se,Ag

Time	Sample Description	Istd#1	Istd#2	Istd#3	Istd#4	Istd#5
22:13	ZZZZZZ	1613	1295	26060	12917	1101
22:17	MP19533-MB2	1554	1261	24561	12408	998
22:21	MP19533-B2	1533	1284	24518	12384	950
22:25	MP19533-MB3	1587	1280	24870	12519	1021
22:29	MP19533-B3	1581	1315	25368	12527	980
22:33	MP19532-MB1	1655	1345	26564	12795	1135
22:37	MP19532-B1	1600	1320	25337	12296	1026
22:41	F78274-1	1471	1318	24400	12317	975
22:45	MA8530-CCV16	1624	1401	26100	12701	1007
22:49	MA8530-CCB16	1739	1428	27830	13165	1180
22:53	MP19532-D1	1466	1282	24353	12299	978
22:58	MP19532-SD1	1599	1345	26430	12967	1093
23:02	MP19532-PS1	1432	1263	23958	12195	954
23:06	MP19532-S1	1462	1291	24147	12010	946
23:10	MP19532-S2	1465	1301	24512	12183	946
23:14	ZZZZZZ	1923	1688	31238	15188	968
23:18	ZZZZZZ	1817	1725	29885	14863	794
23:22	ZZZZZZ	3329 !	3217 !	54383 !	26667 !	913
23:26	ZZZZZZ	1721	1617	28327	14298	660 !
23:31	ZZZZZZ	2147	1996 !	34396	16468	993
23:35	MA8530-CCV17	1633	1399	26917	12914	1014
23:39	MA8530-CCB17	1670	1385	27290	13085	1162
23:43	ZZZZZZ	2343 !	2203 !	38002 !	18603 !	964
23:47	MP19534-MB1	1677	1387	27402	13077	1165
23:51	MP19534-B1	1610	1349	26257	12722	1042
23:55	F78050-1	1650	1356	27145	13026	1146
23:59	MP19534-D1	1655	1367	27121	13049	1146
00:04	MP19534-SD1	1666	1394	27068	12950	1161
00:08	MP19534-PS1	1604	1333	26281	12770	1089
00:12	MP19534-S1	1606	1354	26017	12637	1036
00:16	MP19534-S2	1612	1347	26259	12752	1039
00:20	ZZZZZZ	1651	1349	27070	13016	1142
00:24	MA8530-CCV18	1560	1361	25815	12512	988

INTERNAL STANDARD SUMMARY

Login Number: F78009
Account: TETTNOAK - Tetra Tech, Inc
Project: Holloman AFB; Alamogordo, NM

File ID: SA112310M1.ICP Date Analyzed: 11/23/10 Methods: SW846 6010C
Analyst: RS Run ID: MA8530
Parameters: As,Ba,Cd,Cr,Pb,Se,Ag

Time	Sample Description	Istd#1	Istd#2	Istd#3	Istd#4	Istd#5
00:28	MA8530-CCB18	1660	1363	26904	12888	1159
00:32	ZZZZZZ	1662	1374	27130	12969	1145
00:36	ZZZZZZ	1638	1347	26892	12999	1137
00:40	ZZZZZZ	1629	1345	26749	12873	1138
00:44	ZZZZZZ	1624	1343	26607	12913	1126
00:48	ZZZZZZ	1663	1367	27062	13069	1150
00:53	ZZZZZZ	1671	1366	27300	12999	1154
00:57	ZZZZZZ	1640	1357	27098	13029	1138
01:01	ZZZZZZ	1636	1356	26999	13080	1147
01:05	ZZZZZZ	1635	1339	26778	12966	1147
01:09	ZZZZZZ	1535	1243	24974	12351	995
01:13	MA8530-CCV19	1580	1353	26164	12646	992
01:17	MA8530-CCB19	1658	1367	27147	12993	1159
01:22	ZZZZZZ	1484	1209	24344	12204	966
01:26	ZZZZZZ	1506	1249	24576	12312	979
01:30	ZZZZZZ	1667	1383	27519	13026	1160
01:34	ZZZZZZ	1653	1356	27220	13059	1155
01:38	ZZZZZZ	1453	1187	23976	12272	943
01:42	ZZZZZZ	1477	1201	23914	12123	954
01:47	ZZZZZZ	1454	1159	23754	11988	935
01:51	ZZZZZZ	1457	1188	24112	12245	951
01:55	MP19534-MB2A	1613	1345	27079	12962	1139
01:59	MP19535-MB1	1619	1347	26863	12924	1141
02:04	MA8530-CCV20	1559	1351	25740	12529	988
02:08	MA8530-CCB20	1658	1370	27104	12958	1164
02:12	MP19535-B1	1565	1319	25787	12624	1023
02:16	F78009-36F	1107	878	17944	10204	621 !
02:20	MP19535-D1	1073	860	17682	10102	605 !
02:24	MP19535-SD1	1349	1091	21736	11454	823
02:29	MP19535-PS1	1138	894	18114	10111	629 !
02:33	MP19535-S1	1125	916	18462	10126	612 !
02:37	MP19535-S2	1095	893	18192	9997	601 !
02:42	F78009-37F	1023 !	816 !	16847	9592	569 !

INTERNAL STANDARD SUMMARY

Login Number: F78009
Account: TETTNOAK - Tetra Tech, Inc
Project: Holloman AFB; Alamogordo, NM

File ID: SA112310M1.ICP Date Analyzed: 11/23/10 Methods: SW846 6010C
Analyst: RS Run ID: MA8530
Parameters: As,Ba,Cd,Cr,Pb,Se,Ag

Time	Sample Description	Istd#1	Istd#2	Istd#3	Istd#4	Istd#5
02:54	MA8530-CCV21	1540	1322	25802	12142	983
02:58	MA8530-CCB21	1609	1336	26739	12404	1158

R = Reference for ISTD limits. ! = Outside limits.

LEGEND:

Istd#	Parameter	Limits
Istd#1	Yttrium (2243)	60-125 %
Istd#2	Yttrium (2422)	60-125 %
Istd#3	Yttrium (3242)	60-125 %
Istd#4	Yttrium (3710)	60-125 %
Istd#5	Indium	60-125 %

BLANK RESULTS SUMMARY
Part 1 - Initial and Continuing Calibration Blanks

Login Number: F78009
Account: TETTNOAK - Tetra Tech, Inc
Project: Holloman AFB; Alamogordo, NM

File ID: SA112310M1.ICP Date Analyzed: 11/23/10 Methods: SW846 6010C
QC Limits: result < RL Run ID: MA8530 Units: ug/l

Time:			09:40		09:52		10:42		11:41	
Sample ID:			ICB1		ICB2		CCB1		CCB2	
Metal	RL	IDL	raw	final	raw	final	raw	final	raw	final
Aluminum	200	20	anr							
Antimony	12	1								
Arsenic	10	1	-0.20	<10			-1.1	<10	0.10	<10
Barium	200	1	-1.6	<200			-0.20	<200	0.90	<200
Beryllium	4.0	.1	anr							
Cadmium	5.0	.1	0.0	<5.0			0.20	<5.0	0.20	<5.0
Calcium	1000	50	anr							
Chromium	10	1	0.20	<10			0.20	<10	0.40	<10
Cobalt	50	1	anr							
Copper	25	1	anr							
Iron	300	34	anr							
Lead	5.0	1	-0.60	<5.0			0.70	<5.0	0.20	<5.0
Magnesium	5000	50	anr							
Manganese	15	1	anr							
Molybdenum	50	1								
Nickel	40	1	anr							
Potassium	10000	50	anr							
Selenium	10	2	1.1	<10			0.70	<10	2.7	<10
Silver	10	1	-0.40	<10			-0.30	<10	-0.50	<10
Sodium	10000	750	anr							
Strontium	10	1								
Thallium	10	1	anr							
Tin	50	1								
Titanium	10	1.1								
Vanadium	50	1	anr							
Zinc	20	1	anr							

(*) Outside of QC limits
(anr) Analyte not requested

BLANK RESULTS SUMMARY
Part 1 - Initial and Continuing Calibration Blanks

Login Number: F78009
Account: TETTNOAK - Tetra Tech, Inc
Project: Holloman AFB; Alamogordo, NM

File ID: SA112310M1.ICP Date Analyzed: 11/23/10 Methods: SW846 6010C
QC Limits: result < RL Run ID: MA8530 Units: ug/l

Time:			12:29		13:19		14:09		14:58	
Sample ID:			CCB3		CCB4		CCB5		CCB6	
Metal	RL	IDL	raw	final	raw	final	raw	final	raw	final
Aluminum	200	20	anr							
Antimony	12	1	anr							
Arsenic	10	1	0.60	<10	-0.20	<10	-0.70	<10	-0.80	<10
Barium	200	1	0.90	<200	-0.20	<200	-0.50	<200	0.0	<200
Beryllium	4.0	.1	anr							
Cadmium	5.0	.1	0.30	<5.0	0.30	<5.0	0.40	<5.0	0.40	<5.0
Calcium	1000	50	anr							
Chromium	10	1	0.40	<10	0.30	<10	0.50	<10	1.0	<10
Cobalt	50	1	anr							
Copper	25	1	anr							
Iron	300	34	anr							
Lead	5.0	1	0.50	<5.0	1.1	<5.0	0.10	<5.0	0.60	<5.0
Magnesium	5000	50	anr							
Manganese	15	1	anr							
Molybdenum	50	1								
Nickel	40	1	anr							
Potassium	10000	50	anr							
Selenium	10	2	2.8	<10	0.60	<10	-0.90	<10	2.8	<10
Silver	10	1	-0.30	<10	-0.30	<10	-0.40	<10	-0.50	<10
Sodium	10000	750	anr							
Strontium	10	1								
Thallium	10	1	anr							
Tin	50	1								
Titanium	10	1.1								
Vanadium	50	1	anr							
Zinc	20	1	anr							

(*) Outside of QC limits
(anr) Analyte not requested

BLANK RESULTS SUMMARY
Part 1 - Initial and Continuing Calibration Blanks

Login Number: F78009
Account: TETTNOAK - Tetra Tech, Inc
Project: Holloman AFB; Alamogordo, NM

File ID: SA112310M1.ICP Date Analyzed: 11/23/10 Methods: SW846 6010C
QC Limits: result < RL Run ID: MA8530 Units: ug/l

Time:			15:48		16:10		17:01		17:52	
Sample ID:			CCB7		CCB8		CCB9		CCB10	
Metal	RL	IDL	raw	final	raw	final	raw	final	raw	final
Aluminum	200	20	anr							
Antimony	12	1	anr							
Arsenic	10	1	-0.70	<10	1.1	<10	0.20	<10	0.80	<10
Barium	200	1	-0.40	<200	0.20	<200	-0.80	<200	-0.90	<200
Beryllium	4.0	.1	anr							
Cadmium	5.0	.1	0.20	<5.0	0.20	<5.0	0.10	<5.0	0.0	<5.0
Calcium	1000	50	anr							
Chromium	10	1	0.50	<10	0.30	<10	0.30	<10	0.40	<10
Cobalt	50	1	anr							
Copper	25	1	anr							
Iron	300	34	anr							
Lead	5.0	1	0.50	<5.0	0.10	<5.0	0.20	<5.0	0.50	<5.0
Magnesium	5000	50	anr							
Manganese	15	1	anr							
Molybdenum	50	1								
Nickel	40	1	anr							
Potassium	10000	50	anr							
Selenium	10	2	1.1	<10	0.70	<10	-0.30	<10	-1.6	<10
Silver	10	1	-0.60	<10	0.40	<10	-0.40	<10	0.0	<10
Sodium	10000	750	anr							
Strontium	10	1								
Thallium	10	1	anr							
Tin	50	1								
Titanium	10	1.1								
Vanadium	50	1	anr							
Zinc	20	1	anr							

(*) Outside of QC limits
(anr) Analyte not requested

BLANK RESULTS SUMMARY
Part 1 - Initial and Continuing Calibration Blanks

Login Number: F78009
Account: TETTNOAK - Tetra Tech, Inc
Project: Holloman AFB; Alamogordo, NM

File ID: SA112310M1.ICP Date Analyzed: 11/23/10 Methods: SW846 6010C
QC Limits: result < RL Run ID: MA8530 Units: ug/l

Time:			18:42		19:32		20:20		21:11	
Sample ID:			CCB11		CCB12		CCB13		CCB14	
Metal	RL	IDL	raw	final	raw	final	raw	final	raw	final
Aluminum	200	20	anr							
Antimony	12	1	anr							
Arsenic	10	1	1.0	<10	1.5	<10	1.6	<10	0.80	<10
Barium	200	1	-1.2	<200	-0.30	<200	-0.90	<200	-0.90	<200
Beryllium	4.0	.1	anr							
Cadmium	5.0	.1	0.0	<5.0	0.10	<5.0	0.0	<5.0	0.0	<5.0
Calcium	1000	50	anr							
Chromium	10	1	-0.10	<10	0.40	<10	0.10	<10	0.0	<10
Cobalt	50	1	anr							
Copper	25	1	anr							
Iron	300	34	anr							
Lead	5.0	1	0.90	<5.0	-0.10	<5.0	0.50	<5.0	0.20	<5.0
Magnesium	5000	50	anr							
Manganese	15	1	anr							
Molybdenum	50	1								
Nickel	40	1	anr							
Potassium	10000	50	anr							
Selenium	10	2	-1.1	<10	1.3	<10	0.20	<10	-1.8	<10
Silver	10	1	0.0	<10	0.0	<10	-0.20	<10	-0.30	<10
Sodium	10000	750	anr							
Strontium	10	1								
Thallium	10	1	anr							
Tin	50	1								
Titanium	10	1.1								
Vanadium	50	1	anr							
Zinc	20	1	anr							

(*) Outside of QC limits
(anr) Analyte not requested

BLANK RESULTS SUMMARY
Part 1 - Initial and Continuing Calibration Blanks

Login Number: F78009
Account: TETTNOAK - Tetra Tech, Inc
Project: Holloman AFB; Alamogordo, NM

File ID: SA112310M1.ICP Date Analyzed: 11/23/10 Methods: SW846 6010C
QC Limits: result < RL Run ID: MA8530 Units: ug/l

Time:			22:00		22:49		23:39		00:28	
Sample ID:			CCB15		CCB16		CCB17		CCB18	
Metal	RL	IDL	raw	final	raw	final	raw	final	raw	final
Aluminum	200	20	anr							
Antimony	12	1	anr							
Arsenic	10	1	0.60	<10	0.70	<10	1.8	<10	0.10	<10
Barium	200	1	-0.70	<200	-1.4	<200	-1.6	<200	-0.90	<200
Beryllium	4.0	.1	anr							
Cadmium	5.0	.1	0.10	<5.0	0.0	<5.0	0.10	<5.0	0.0	<5.0
Calcium	1000	50	anr							
Chromium	10	1	0.50	<10	0.20	<10	-0.30	<10	0.20	<10
Cobalt	50	1	anr							
Copper	25	1	anr							
Iron	300	34	anr							
Lead	5.0	1	0.70	<5.0	1.1	<5.0	2.3	<5.0	1.4	<5.0
Magnesium	5000	50	anr							
Manganese	15	1	anr							
Molybdenum	50	1								
Nickel	40	1	anr							
Potassium	10000	50	anr							
Selenium	10	2	-0.20	<10	-0.70	<10	0.0	<10	-1.2	<10
Silver	10	1	-0.40	<10	-0.20	<10	-0.60	<10	-0.30	<10
Sodium	10000	750	anr							
Strontium	10	1								
Thallium	10	1	anr							
Tin	50	1								
Titanium	10	1.1								
Vanadium	50	1	anr							
Zinc	20	1	anr							

(*) Outside of QC limits
(anr) Analyte not requested

BLANK RESULTS SUMMARY
Part 1 - Initial and Continuing Calibration Blanks

Login Number: F78009
Account: TETTNOAK - Tetra Tech, Inc
Project: Holloman AFB; Alamogordo, NM

File ID: SA112310M1.ICP Date Analyzed: 11/23/10 Methods: SW846 6010C
QC Limits: result < RL Run ID: MA8530 Units: ug/l

Time:			01:17		02:08		02:58	
Sample ID:			CCB19		CCB20		CCB21	
Metal	RL	IDL	raw	final	raw	final	raw	final
Aluminum	200	20	anr					
Antimony	12	1	anr					
Arsenic	10	1	0.40	<10	0.80	<10	-0.30	<10
Barium	200	1	-1.6	<200	-1.3	<200	-0.30	<200
Beryllium	4.0	.1	anr					
Cadmium	5.0	.1	0.10	<5.0	0.0	<5.0	0.0	<5.0
Calcium	1000	50	anr					
Chromium	10	1	0.10	<10	0.0	<10	0.20	<10
Cobalt	50	1	anr					
Copper	25	1	anr					
Iron	300	34	anr					
Lead	5.0	1	0.20	<5.0	-0.50	<5.0	0.30	<5.0
Magnesium	5000	50	anr					
Manganese	15	1	anr					
Molybdenum	50	1						
Nickel	40	1	anr					
Potassium	10000	50	anr					
Selenium	10	2	2.1	<10	-0.20	<10	5.4	<10
Silver	10	1	-0.20	<10	0.30	<10	0.20	<10
Sodium	10000	750	anr					
Strontium	10	1						
Thallium	10	1	anr					
Tin	50	1						
Titanium	10	1.1						
Vanadium	50	1	anr					
Zinc	20	1	anr					

(*) Outside of QC limits
(anr) Analyte not requested

CALIBRATION CHECK STANDARDS SUMMARY
Initial and Continuing Calibration Checks

Login Number: F78009
Account: TETTNOAK - Tetra Tech, Inc
Project: Holloman AFB; Alamogordo, NM

File ID: SA112310M1.ICP Date Analyzed: 11/23/10 Methods: SW846 6010C
QC Limits: 90 to 110 % Recovery Run ID: MA8530 Units: ug/l

Time:		09:33			10:34			11:37	
Sample ID:	ICV	ICV1		CCV	CCV1		CCV	CCV2	
Metal	True	Results	% Rec	True	Results	% Rec	True	Results	% Rec
Aluminum	anr								
Antimony	anr								
Arsenic	2000	2010	100.5	2000	2040	102.0	2000	2050	102.5
Barium	2000	2070	103.5	2000	2070	103.5	2000	2050	102.5
Beryllium	anr								
Cadmium	2000	2070	103.5	2000	2060	103.0	2000	2070	103.5
Calcium	anr								
Chromium	2000	2080	104.0	2000	2090	104.5	2000	2080	104.0
Cobalt	anr								
Copper	anr								
Iron	anr								
Lead	2000	2020	101.0	2000	2010	100.5	2000	2000	100.0
Magnesium	anr								
Manganese	anr								
Molybdenum									
Nickel	anr								
Potassium	anr								
Selenium	2000	2050	102.5	2000	2040	102.0	2000	2060	103.0
Silver	250	245	98.0	250	250	100.0	250	244	97.6
Sodium	anr								
Strontium									
Thallium	anr								
Tin									
Titanium									
Vanadium	anr								
Zinc	anr								

(*) Outside of QC limits
(anr) Analyte not requested

CALIBRATION CHECK STANDARDS SUMMARY
Initial and Continuing Calibration Checks

Login Number: F78009
Account: TETTNOAK - Tetra Tech, Inc
Project: Holloman AFB; Alamogordo, NM

File ID: SA112310M1.ICP Date Analyzed: 11/23/10 Methods: SW846 6010C
QC Limits: 90 to 110 % Recovery Run ID: MA8530 Units: ug/l

Time:		12:25			13:16			14:05	
Sample ID:	CCV	CCV3		CCV	CCV4		CCV	CCV5	
Metal	True	Results	% Rec	True	Results	% Rec	True	Results	% Rec
Aluminum	anr								
Antimony	anr								
Arsenic	2000	2040	102.0	2000	2060	103.0	2000	2060	103.0
Barium	2000	2040	102.0	2000	2090	104.5	2000	2060	103.0
Beryllium	anr								
Cadmium	2000	2060	103.0	2000	2060	103.0	2000	2060	103.0
Calcium	anr								
Chromium	2000	2070	103.5	2000	2090	104.5	2000	2080	104.0
Cobalt	anr								
Copper	anr								
Iron	anr								
Lead	2000	1970	98.5	2000	1970	98.5	2000	1960	98.0
Magnesium	anr								
Manganese	anr								
Molybdenum									
Nickel	anr								
Potassium	anr								
Selenium	2000	2070	103.5	2000	2090	104.5	2000	2080	104.0
Silver	250	242	96.8	250	242	96.8	250	241	96.4
Sodium	anr								
Strontium									
Thallium	anr								
Tin									
Titanium									
Vanadium	anr								
Zinc	anr								

(*) Outside of QC limits
(anr) Analyte not requested

CALIBRATION CHECK STANDARDS SUMMARY
Initial and Continuing Calibration Checks

Login Number: F78009
Account: TETTNOAK - Tetra Tech, Inc
Project: Holloman AFB; Alamogordo, NM

File ID: SA112310M1.ICP Date Analyzed: 11/23/10 Methods: SW846 6010C
QC Limits: 90 to 110 % Recovery Run ID: MA8530 Units: ug/l

Time:		14:54			15:44			16:05	
Sample ID:	CCV	CCV6		CCV	CCV7		CCV	CCV8	
Metal	True	Results	% Rec	True	Results	% Rec	True	Results	% Rec
Aluminum	anr								
Antimony	anr								
Arsenic	2000	2050	102.5	2000	2070	103.5	2000	2000	100.0
Barium	2000	2040	102.0	2000	2050	102.5	2000	2030	101.5
Beryllium	anr								
Cadmium	2000	2060	103.0	2000	2090	104.5	2000	2030	101.5
Calcium	anr								
Chromium	2000	2090	104.5	2000	2120	106.0	2000	2070	103.5
Cobalt	anr								
Copper	anr								
Iron	anr								
Lead	2000	1970	98.5	2000	1980	99.0	2000	1980	99.0
Magnesium	anr								
Manganese	anr								
Molybdenum									
Nickel	anr								
Potassium	anr								
Selenium	2000	2080	104.0	2000	2090	104.5	2000	2010	100.5
Silver	250	240	96.0	250	239	95.6	250	246	98.4
Sodium	anr								
Strontium									
Thallium	anr								
Tin									
Titanium									
Vanadium	anr								
Zinc	anr								

(*) Outside of QC limits
(anr) Analyte not requested

CALIBRATION CHECK STANDARDS SUMMARY
Initial and Continuing Calibration Checks

Login Number: F78009
Account: TETTNOAK - Tetra Tech, Inc
Project: Holloman AFB; Alamogordo, NM

File ID: SA112310M1.ICP Date Analyzed: 11/23/10 Methods: SW846 6010C
QC Limits: 90 to 110 % Recovery Run ID: MA8530 Units: ug/l

Time:		16:57			17:48			18:38	
Sample ID:	CCV	CCV9		CCV	CCV10		CCV	CCV11	
Metal	True	Results	% Rec	True	Results	% Rec	True	Results	% Rec
Aluminum	anr								
Antimony	anr								
Arsenic	2000	1990	99.5	2000	1940	97.0	2000	1960	98.0
Barium	2000	2040	102.0	2000	2020	101.0	2000	2040	102.0
Beryllium	anr								
Cadmium	2000	2040	102.0	2000	2010	100.5	2000	2010	100.5
Calcium	anr								
Chromium	2000	2060	103.0	2000	2050	102.5	2000	2040	102.0
Cobalt	anr								
Copper	anr								
Iron	anr								
Lead	2000	2000	100.0	2000	2020	101.0	2000	2010	100.5
Magnesium	anr								
Manganese	anr								
Molybdenum									
Nickel	anr								
Potassium	anr								
Selenium	2000	2000	100.0	2000	1940	97.0	2000	1960	98.0
Silver	250	247	98.8	250	251	100.4	250	251	100.4
Sodium	anr								
Strontium									
Thallium	anr								
Tin									
Titanium									
Vanadium	anr								
Zinc	anr								

(*) Outside of QC limits
(anr) Analyte not requested

CALIBRATION CHECK STANDARDS SUMMARY
Initial and Continuing Calibration Checks

Login Number: F78009
Account: TETTNOAK - Tetra Tech, Inc
Project: Holloman AFB; Alamogordo, NM

File ID: SA112310M1.ICP Date Analyzed: 11/23/10 Methods: SW846 6010C
QC Limits: 90 to 110 % Recovery Run ID: MA8530 Units: ug/l

Time:		19:28			20:16			21:07	
Sample ID:	CCV	CCV12		CCV	CCV13		CCV	CCV14	
Metal	True	Results	% Rec	True	Results	% Rec	True	Results	% Rec
Aluminum	anr								
Antimony	anr								
Arsenic	2000	1960	98.0	2000	1950	97.5	2000	1950	97.5
Barium	2000	2040	102.0	2000	2040	102.0	2000	2050	102.5
Beryllium	anr								
Cadmium	2000	2010	100.5	2000	2010	100.5	2000	2000	100.0
Calcium	anr								
Chromium	2000	2040	102.0	2000	2050	102.5	2000	2050	102.5
Cobalt	anr								
Copper	anr								
Iron	anr								
Lead	2000	2010	100.5	2000	2040	102.0	2000	2020	101.0
Magnesium	anr								
Manganese	anr								
Molybdenum									
Nickel	anr								
Potassium	anr								
Selenium	2000	1960	98.0	2000	1950	97.5	2000	1940	97.0
Silver	250	252	100.8	250	255	102.0	250	253	101.2
Sodium	anr								
Strontium									
Thallium	anr								
Tin									
Titanium									
Vanadium	anr								
Zinc	anr								

(*) Outside of QC limits
(anr) Analyte not requested

CALIBRATION CHECK STANDARDS SUMMARY
Initial and Continuing Calibration Checks

Login Number: F78009
Account: TETTNOAK - Tetra Tech, Inc
Project: Holloman AFB; Alamogordo, NM

File ID: SA112310M1.ICP Date Analyzed: 11/23/10 Methods: SW846 6010C
QC Limits: 90 to 110 % Recovery Run ID: MA8530 Units: ug/l

Time:		21:56			22:45			23:35	
Sample ID:	CCV	CCV15		CCV	CCV16		CCV	CCV17	
Metal	True	Results	% Rec	True	Results	% Rec	True	Results	% Rec
Aluminum	anr								
Antimony	anr								
Arsenic	2000	1990	99.5	2000	1980	99.0	2000	1960	98.0
Barium	2000	2090	104.5	2000	2080	104.0	2000	2060	103.0
Beryllium	anr								
Cadmium	2000	2020	101.0	2000	2010	100.5	2000	2000	100.0
Calcium	anr								
Chromium	2000	2050	102.5	2000	2040	102.0	2000	2050	102.5
Cobalt	anr								
Copper	anr								
Iron	anr								
Lead	2000	2000	100.0	2000	2000	100.0	2000	1980	99.0
Magnesium	anr								
Manganese	anr								
Molybdenum									
Nickel	anr								
Potassium	anr								
Selenium	2000	2000	100.0	2000	1980	99.0	2000	1960	98.0
Silver	250	253	101.2	250	251	100.4	250	247	98.8
Sodium	anr								
Strontium									
Thallium	anr								
Tin									
Titanium									
Vanadium	anr								
Zinc	anr								

(*) Outside of QC limits
(anr) Analyte not requested

CALIBRATION CHECK STANDARDS SUMMARY
Initial and Continuing Calibration Checks

Login Number: F78009
Account: TETTNOAK - Tetra Tech, Inc
Project: Holloman AFB; Alamogordo, NM

File ID: SA112310M1.ICP Date Analyzed: 11/23/10 Methods: SW846 6010C
QC Limits: 90 to 110 % Recovery Run ID: MA8530 Units: ug/l

Time:		00:24			01:13			02:04	
Sample ID:	CCV	CCV18		CCV	CCV19		CCV	CCV20	
Metal	True	Results	% Rec	True	Results	% Rec	True	Results	% Rec
Aluminum	anr								
Antimony	anr								
Arsenic	2000	2010	100.5	2000	1990	99.5	2000	2010	100.5
Barium	2000	2100	105.0	2000	2080	104.0	2000	2100	105.0
Beryllium	anr								
Cadmium	2000	2020	101.0	2000	2010	100.5	2000	2020	101.0
Calcium	anr								
Chromium	2000	2060	103.0	2000	2070	103.5	2000	2060	103.0
Cobalt	anr								
Copper	anr								
Iron	anr								
Lead	2000	1970	98.5	2000	1970	98.5	2000	1970	98.5
Magnesium	anr								
Manganese	anr								
Molybdenum									
Nickel	anr								
Potassium	anr								
Selenium	2000	2030	101.5	2000	2010	100.5	2000	2020	101.0
Silver	250	249	99.6	250	250	100.0	250	246	98.4
Sodium	anr								
Strontium									
Thallium	anr								
Tin									
Titanium									
Vanadium	anr								
Zinc	anr								

(*) Outside of QC limits
(anr) Analyte not requested

CALIBRATION CHECK STANDARDS SUMMARY
Initial and Continuing Calibration Checks

Login Number: F78009
Account: TETTNOAK - Tetra Tech, Inc
Project: Holloman AFB; Alamogordo, NM

File ID: SA112310M1.ICP Date Analyzed: 11/23/10 Methods: SW846 6010C
QC Limits: 90 to 110 % Recovery Run ID: MA8530 Units: ug/l

Time:		02:54	
Sample ID:	CCV	CCV21	
Metal	True	Results	% Rec
Aluminum	anr		
Antimony	anr		
Arsenic	2000	1980	99.0
Barium	2000	2140	107.0
Beryllium	anr		
Cadmium	2000	1990	99.5
Calcium	anr		
Chromium	2000	2070	103.5
Cobalt	anr		
Copper	anr		
Iron	anr		
Lead	2000	1940	97.0
Magnesium	anr		
Manganese	anr		
Molybdenum			
Nickel	anr		
Potassium	anr		
Selenium	2000	2020	101.0
Silver	250	245	98.0
Sodium	anr		
Strontium			
Thallium	anr		
Tin			
Titanium			
Vanadium	anr		
Zinc	anr		

(*) Outside of QC limits
(anr) Analyte not requested

HIGH STANDARD CHECK SUMMARY

Login Number: F78009
Account: TETTNOAK - Tetra Tech, Inc
Project: Holloman AFB; Alamogordo, NM

File ID: SA112310M1.ICP Date Analyzed: 11/23/10 Methods: SW846 6010C
QC Limits: 95 to 105 % Recovery Run ID: MA8530 Units: ug/l

Time:		09:29	
Sample ID:	HSTD	HSTD1	
Metal	True	Results	% Rec
Aluminum	anr		
Antimony	anr		
Arsenic	4000	4080	102.0
Barium	4000	4010	100.3
Beryllium	anr		
Cadmium	4000	4010	100.3
Calcium	anr		
Chromium	4000	3940	98.5
Cobalt	anr		
Copper	anr		
Iron	anr		
Lead	4000	4000	100.0
Magnesium	anr		
Manganese	anr		
Molybdenum			
Nickel	anr		
Potassium	anr		
Selenium	4000	4080	102.0
Silver	500	498	99.6
Sodium	anr		
Strontium			
Thallium	anr		
Tin			
Titanium			
Vanadium	anr		
Zinc	anr		

(*) Outside of QC limits
(anr) Analyte not requested

LOW CALIBRATION CHECK STANDARDS SUMMARY

Login Number: F78009
Account: TETTNOAK - Tetra Tech, Inc
Project: Holloman AFB; Alamogordo, NM

File ID: SA112310M1.ICP Date Analyzed: 11/23/10 Methods: SW846 6010C
QC Limits: CRI 70-130% CRIA 70-130% Run ID: MA8530 Units: ug/l

Time:			09:55	
Sample ID:	CRI	CRIA	CRIA1	
Metal	True	True	Results	% Rec
Aluminum	400	200	anr	
Antimony	10	5.0	anr	
Arsenic	20	10	9.8	98.0
Barium	400	200	207	103.5
Beryllium	10	5.0	anr	
Cadmium	10	5.0	5.2	104.0
Calcium	2000	1000	anr	
Chromium	20	10	11.5	115.0
Cobalt	100	50	anr	
Copper	50	25	anr	
Iron	600	300	anr	
Lead	10	5.0	5.7	114.0
Magnesium	10000	5000	anr	
Manganese	30	15	anr	
Molybdenum	100	50		
Nickel	80	40	anr	
Potassium	20000	10000	anr	
Selenium	20	10	12.0	120.0
Silver	20	10	8.8	88.0
Sodium	20000	10000	anr	
Strontium	20	10		
Thallium	20	10	anr	
Tin	100	50		
Titanium	20	10		
Vanadium	100	50	anr	
Zinc	40	20	anr	

(*) Outside of QC limits
(anr) Analyte not requested

INTERFERING ELEMENT CHECK STANDARDS SUMMARY
Part 1 - ICSA and ICSAB Standards

Login Number: F78009
Account: TETTNOAK - Tetra Tech, Inc
Project: Holloman AFB; Alamogordo, NM

File ID: SA112310M1.ICP Date Analyzed: 11/23/10 Methods: SW846 6010C
QC Limits: 80 to 120 % Recovery Run ID: MA8530 Units: ug/l

Time:			10:19		10:30	
Sample ID:	ICSA	ICSAB	ICSA1		ICSAB1	
Metal	True	True	Results	% Rec	Results	% Rec
Aluminum	500000	500000	506000	101.2	505000	101.0
Antimony		1000	0.10		1020	102.0
Arsenic		1000	0.0		1040	104.0
Barium		500	1.7		523	104.6
Beryllium		500	-0.10		495	99.0
Cadmium		1000	0.10		939	93.9
Calcium	500000	500000	466000	93.2	454000	90.8
Chromium		500	-0.40		425	85.0
Cobalt		500	0.30		487	97.4
Copper		500	0.0		517	103.4
Iron	200000	200000	190000	95.0	184000	92.0
Lead		1000	0.0		976	97.6
Magnesium	500000	500000	525000	105.0	513000	102.6
Manganese		500	0.40		436	87.2
Molybdenum		1000	-0.10		971	97.1
Nickel		1000	0.0		969	96.9
Potassium			-11		-24	
Selenium		1000	1.9		1020	102.0
Silver		1000	0.20		1110	111.0
Sodium			-530		-870	
Strontium		1000	-5.7		-5.5	0.0
Thallium		1000	-0.10		936	93.6
Tin		1000	5.0		923	92.3
Titanium		1000	2.0		2.9	0.3
Vanadium		500	0.10		442	88.4
Zinc		1000	-4.4		884	88.4

(*) Outside of QC limits
(anr) Analyte not requested

Accutest Laboratories Instrument Runlog
Inorganics Analyses

Login Number: F78009
Account: TETTNOAK - Tetra Tech, Inc
Project: Holloman AFB; Alamogordo, NM

File ID: SA112410M1.ICP Date Analyzed: 11/24/10 Methods: SW846 6010C
Analyst: RS Run ID: MA8534
Parameters: As,Cd,Cr,Pb,Se

Time	Sample Description	Dilution Factor	PS Recov	Comments
07:52	MA8534-STD1	1		STDA
07:56	MA8534-STD2	1		STDB
07:59	MA8534-STD3	1		STDC
08:09	MA8534-HSTD1	1		
08:12	MA8534-ICV1	1		
08:18	MA8534-ICB1	1		
08:21	MA8534-CRIA1	1		
08:44	MA8534-CRIA2	1		
08:55	MA8534-ICSA1	1		
09:02	MA8534-ICSAB1	1		
09:05	MA8534-CCV1	1		
09:10	MA8534-CCB1	1		
09:45	ZZZZZZ	40		
09:49	ZZZZZZ	20		
09:53	ZZZZZZ	1		
09:57	F78156-14	20		(sample used for QC only; not part of login F78009)
10:01	MP19530-D1	20		
10:05	MP19530-S1	20		
10:09	MP19530-S2	20		
10:13	MP19530-PS1	20		
10:17	MP19530-SD1	100		
10:21	F78156-14	4		(sample used for QC only; not part of login F78009)
10:26	MA8534-CCV2	1		
10:29	MA8534-CCB2	1		
10:34	MP19530-D1	4		
10:38	MP19530-S1	4		
10:42	MP19530-S2	4		
10:46	MP19530-PS1	4		
10:50	MP19530-SD1	20		
10:54	ZZZZZZ	5		
10:58	ZZZZZZ	4		
11:02	ZZZZZZ	5		
11:06	ZZZZZZ	4		

Accutest Laboratories Instrument Runlog
Inorganics Analyses

Login Number: F78009
Account: TETTNOAK - Tetra Tech, Inc
Project: Holloman AFB; Alamogordo, NM

File ID: SA112410M1.ICP Date Analyzed: 11/24/10 Methods: SW846 6010C
Analyst: RS Run ID: MA8534
Parameters: As,Cd,Cr,Pb,Se

Time	Sample Description	Dilution Factor	PS Recov	Comments
11:10	ZZZZZZ	4		
11:14	MA8534-CCV3	1		
11:18	MA8534-CCB3	1		
11:22	ZZZZZZ	4		
11:26	ZZZZZZ	2		
11:30	ZZZZZZ	2		
11:34	ZZZZZZ	2		
11:39	ZZZZZZ	2		
11:43	ZZZZZZ	10		
11:47	ZZZZZZ	4		
11:51	ZZZZZZ	4		
11:55	ZZZZZZ	5		
11:59	ZZZZZZ	2		
12:03	MA8534-CCV4	1		
12:07	MA8534-CCB4	1		
12:11	ZZZZZZ	4		
12:15	ZZZZZZ	4		
12:19	ZZZZZZ	4		
12:24	ZZZZZZ	5		
12:28	ZZZZZZ	4		
12:32	ZZZZZZ	4		
12:36	ZZZZZZ	10		
12:40	F78009-36F	4		
12:44	MP19535-D1	4		
12:49	MP19535-S1	4		
12:53	MA8534-CCV5	1		
12:57	MA8534-CCB5	1		
13:01	MP19535-S2	4		
13:05	MP19535-PS1	4		
13:10	MP19535-SD1	20		
13:14	F78009-37F	4		
---------->	Last reportable sample/prep for job F78009			
13:18	ZZZZZZ	1		
13:22	ZZZZZZ	1		

Accutest Laboratories Instrument Runlog
Inorganics Analyses

Login Number: F78009
Account: TETTNOAK - Tetra Tech, Inc
Project: Holloman AFB; Alamogordo, NM

File ID: SA112410M1.ICP Date Analyzed: 11/24/10 Methods: SW846 6010C
Analyst: RS Run ID: MA8534
Parameters: As,Cd,Cr,Pb,Se

Time	Sample Description	Dilution Factor	PS Recov	Comments
13:26	ZZZZZZ	1		
13:30	ZZZZZZ	1		
13:35	ZZZZZZ	1		
13:39	ZZZZZZ	1		
13:43	MA8534-CCV6	1		
13:47	MA8534-CCB6	1		
13:51	ZZZZZZ	1		
13:55	ZZZZZZ	1		
13:59	ZZZZZZ	1		
14:03	ZZZZZZ	1		
14:07	ZZZZZZ	1		
14:12	ZZZZZZ	1		
14:16	ZZZZZZ	1		
14:20	ZZZZZZ	1		
14:24	F78156-6	4		(sample used for QC only; not part of login F78009)
14:28	MP19516-D1	4		
14:32	MA8534-CCV7	1		
14:36	MA8534-CCB7	1		
14:40	MP19516-S1	4		
14:44	MP19516-S2	4		
14:48	MP19516-PS1	4		
14:52	MP19516-SD1	20		
14:56	ZZZZZZ	5		
15:00	ZZZZZZ	5		
15:04	ZZZZZZ	5		
15:13	ZZZZZZ	5		
15:17	ZZZZZZ	5		
15:21	ZZZZZZ	4		
15:25	MA8534-CCV8	1		
15:29	MA8534-CCB8	1		
15:33	ZZZZZZ	10		
15:37	ZZZZZZ	5		
15:41	ZZZZZZ	5		

Accutest Laboratories Instrument Runlog
Inorganics Analyses

Login Number: F78009
Account: TETTNOAK - Tetra Tech, Inc
Project: Holloman AFB; Alamogordo, NM

File ID: SA112410M1.ICP Date Analyzed: 11/24/10 Methods: SW846 6010C
Analyst: RS Run ID: MA8534
Parameters: As,Cd,Cr,Pb,Se

Time	Sample Description	Dilution Factor	PS Recov	Comments
15:45	ZZZZZZ	5		
15:49	ZZZZZZ	5		
15:53	ZZZZZZ	4		
15:57	ZZZZZZ	4		
16:01	ZZZZZZ	4		
16:05	ZZZZZZ	10		
16:10	ZZZZZZ	4		
16:14	MA8534-CCV9	1		
16:18	MA8534-CCB9	1		
16:47	MA8534-CCV10	1		
16:54	MA8534-CCB10	1		
17:01	ZZZZZZ	5		
17:05	ZZZZZZ	5		
17:09	ZZZZZZ	4		
17:13	ZZZZZZ	4		
17:17	ZZZZZZ	4		
17:41	MA8534-CCV11	1		
17:45	MA8534-CCB11	1		
17:54	F78274-1	20		(sample used for QC only; not part of login F78009)
17:58	MP19532-D1	20		
18:02	MP19532-S1	20		
18:06	MP19532-S2	20		
18:10	MP19532-PS1	20		
18:14	MP19532-SD1	100		
18:18	ZZZZZZ	10		
18:22	ZZZZZZ	10		
18:26	ZZZZZZ	5		
18:30	MA8534-CCV12	1		
18:34	MA8534-CCB12	1		
18:38	ZZZZZZ	4		
18:42	ZZZZZZ	5		
18:47	ZZZZZZ	4		
18:51	MP19545-MB1	1		

Accutest Laboratories Instrument Runlog
Inorganics Analyses

Login Number: F78009
Account: TETTNOAK - Tetra Tech, Inc
Project: Holloman AFB; Alamogordo, NM

File ID: SA112410M1.ICP Date Analyzed: 11/24/10 Methods: SW846 6010C
Analyst: RS Run ID: MA8534
Parameters: As,Cd,Cr,Pb,Se

Time	Sample Description	Dilution Factor	PS Recov	Comments
18:55	MP19545-B1	1		
18:59	F78236-1	1		(sample used for QC only; not part of login F78009)
19:03	MP19545-D1	1		
19:07	MP19545-SD1	5		
19:11	MP19545-PS1	1		
19:15	MP19545-S1	1		
19:19	MA8534-CCV13	1		
19:23	MA8534-CCB13	1		
19:27	MP19545-S2	1		
19:31	ZZZZZZ	1		
19:35	ZZZZZZ	1		
19:39	ZZZZZZ	1		
19:43	ZZZZZZ	1		
19:47	ZZZZZZ	1		
19:51	MP19545-MB2	1		
19:56	MP19543-MB1	1		
20:00	MP19543-B1	1		
20:04	F78062-5F	1		(sample used for QC only; not part of login F78009)
20:08	MA8534-CCV14	1		
20:12	MA8534-CCB14	1		
20:16	MP19543-D1	1		
20:20	MP19543-SD1	5		
20:24	MP19543-PS1	1		
20:28	MP19543-S1	1		
20:32	MP19543-S2	1		
20:36	ZZZZZZ	1		
20:40	ZZZZZZ	1		
20:44	ZZZZZZ	1		
20:48	ZZZZZZ	1		
20:53	ZZZZZZ	1		
20:57	MA8534-CCV15	1		
21:01	MA8534-CCB15	1		
21:05	ZZZZZZ	1		

Accutest Laboratories Instrument Runlog
Inorganics Analyses

Login Number: F78009
Account: TETTNOAK - Tetra Tech, Inc
Project: Holloman AFB; Alamogordo, NM

File ID: SA112410M1.ICP Date Analyzed: 11/24/10 Methods: SW846 6010C
Analyst: RS Run ID: MA8534
Parameters: As,Cd,Cr,Pb,Se

Time	Sample Description	Dilution Factor	PS Recov	Comments
21:09	ZZZZZZ	1		
21:14	ZZZZZZ	1		
21:18	ZZZZZZ	1		
21:22	ZZZZZZ	1		
21:26	ZZZZZZ	1		
21:30	ZZZZZZ	1		
21:35	ZZZZZZ	1		
21:39	ZZZZZZ	1		
21:43	ZZZZZZ	1		
21:47	MA8534-CCV16	1		
21:51	MA8534-CCB16	1		
21:56	ZZZZZZ	1		
22:36	MA8534-CCV17	1		
22:40	MA8534-CCB17	1		
23:18	MP19537-MB1	1		
23:22	MP19537-B1	1		
23:26	MA8534-CCV18	1		
23:30	MA8534-CCB18	1		
23:34	F78177-1A	1		(sample used for QC only; not part of login F78009)
23:38	MP19537-D1	1		
23:43	MP19537-SD1	5		
23:47	MP19537-S1	1		
23:51	MP19537-S2	1		
23:54	ZZZZZZ	1		
23:59	ZZZZZZ	1		
00:03	ZZZZZZ	1		
00:07	ZZZZZZ	1		
00:11	ZZZZZZ	1		
00:15	MA8534-CCV19	1		
00:19	MA8534-CCB19	1		
00:23	ZZZZZZ	1		
00:27	ZZZZZZ	1		
00:32	F77565-12R	1		(sample used for QC only; not part of login F78009)

Accutest Laboratories Instrument Runlog
Inorganics Analyses

Login Number: F78009
Account: TETTNOAK - Tetra Tech, Inc
Project: Holloman AFB; Alamogordo, NM

File ID: SA112410M1.ICP Date Analyzed: 11/24/10 Methods: SW846 6010C
Analyst: RS Run ID: MA8534
Parameters: As,Cd,Cr,Pb,Se

Time	Sample Description	Dilution Factor	PS Recov	Comments
00:36	ZZZZZZ	1		
00:40	ZZZZZZ	1		
00:44	MP19537-D2	1		
00:48	MP19537-MB2	1		
00:52	MP19537-B2	1		
01:04	MA8534-CCV20	1		
01:08	MA8534-CCB20	1		
05:16	MA8534-CCV21	1		
05:20	MA8534-CCB21	1		
05:28	MA8534-CRIA3	1		
05:33	MA8534-ICSA2	1		
05:37	MA8534-ICSAB2	1		
05:41	MA8534-CCV22	1		
05:45	MA8534-CCB22	1		

----------> Last reportable CCB for job F78009
Refer to raw data for calibration curve and standards.

INTERNAL STANDARD SUMMARY

Login Number: F78009
Account: TETTNOAK - Tetra Tech, Inc
Project: Holloman AFB; Alamogordo, NM

File ID: SA112410M1.ICP Date Analyzed: 11/24/10 Methods: SW846 6010C
Analyst: RS Run ID: MA8534
Parameters: As,Cd,Cr,Pb,Se

Time	Sample Description	Istd#1	Istd#2	Istd#3	Istd#4	Istd#5
07:52	MA8534-STD1	2001	1603	29441	13590	1257
07:56	MA8534-STD2	1939	1601	28397	13571	1088
07:59	MA8534-STD3	1844	1601	27297	13340	1008
08:09	MA8534-HSTD1	1840	1612	27113	13178	1004
08:12	MA8534-ICV1	1913	1605	28061	13426	1084
08:18	MA8534-ICB1	1992 R	1599 R	28857 R	13478 R	1268 R
08:21	MA8534-CRIA1	1968	1575	28445	13487	1216
08:44	MA8534-CRIA2	1980	1602	999999	13378	1218
08:55	MA8534-ICSA1	1724	1638	25046	12864	909
09:02	MA8534-ICSAB1	1724	1636	25242	12963	901
09:05	MA8534-CCV1	1888	1608	27700	13385	1076
09:10	MA8534-CCB1	2012	1620	29002	13589	1279
09:45	ZZZZZZ	2205	1929	31770	15184	1144
09:49	ZZZZZZ	2403	2050 !	34771	16713	1085
09:53	ZZZZZZ	1990	1606	28981	13721	1260
09:57	F78156-14	1989	1651	29126	13680	1224
10:01	MP19530-D1	2023	1664	29299	13719	1231
10:05	MP19530-S1	2026	1671	29362	13738	1227
10:09	MP19530-S2	2007	1657	29201	13783	1215
10:13	MP19530-PS1	2000	1654	28977	13650	1223
10:17	MP19530-SD1	2001	1615	28886	13517	1258
10:21	F78156-14	2123	1812	30828	14536	1189
10:26	MA8534-CCV2	1874	1606	27436	13235	1068
10:29	MA8534-CCB2	1980	1621	28741	13433	1265
10:34	MP19530-D1	2140	1838	30662	14764	1174
10:38	MP19530-S1	2085	1818	30188	14403	1153
10:42	MP19530-S2	2084	1818	30268	14563	1143
10:46	MP19530-PS1	2086	1814	30270	14456	1166
10:50	MP19530-SD1	2038	1679	29317	13657	1247
10:54	ZZZZZZ	2165	1901	31409	14950	1169
10:58	ZZZZZZ	2149	1881	31176	14959	1148
11:02	ZZZZZZ	2127	1864	30774	14648	1179
11:06	ZZZZZZ	2129	1834	30559	14493	1193

INTERNAL STANDARD SUMMARY

Login Number: F78009
Account: TETTNOAK - Tetra Tech, Inc
Project: Holloman AFB; Alamogordo, NM

File ID: SA112410M1.ICP Date Analyzed: 11/24/10 Methods: SW846 6010C
Analyst: RS Run ID: MA8534
Parameters: As,Cd,Cr,Pb,Se

Time	Sample Description	Istd#1	Istd#2	Istd#3	Istd#4	Istd#5
11:10	ZZZZZZ	2166	1893	31232	14770	1175
11:14	MA8534-CCV3	1903	1617	27947	13455	1083
11:18	MA8534-CCB3	1992	1623	28854	13410	1273
11:22	ZZZZZZ	2158	1879	31222	14760	1174
11:26	ZZZZZZ	2096	1889	30698	15211	999
11:30	ZZZZZZ	2007	1712	29243	14313	1072
11:34	ZZZZZZ	2033	1797	29805	14924	1019
11:39	ZZZZZZ	2050	1745	29683	14292	1111
11:43	ZZZZZZ	1970	1639	28840	13733	1120
11:47	ZZZZZZ	1962	1679	28773	14121	1034
11:51	ZZZZZZ	1962	1736	28998	14396	1028
11:55	ZZZZZZ	2122	2022 !	30710	14610	1159
11:59	ZZZZZZ	2290	2359 !	33505	16128	1092
12:03	MA8534-CCV4	1889	1630	27737	13207	1078
12:07	MA8534-CCB4	1989	1619	28804	13373	1274
12:11	ZZZZZZ	2202	2219 !	32046	15271	1133
12:15	ZZZZZZ	2205	1973	32061	15031	1171
12:19	ZZZZZZ	2132	2009 !	31266	14903	1144
12:24	ZZZZZZ	2244	2222 !	32681	15719	1142
12:28	ZZZZZZ	1933	1560	27968	13329	1171
12:32	ZZZZZZ	1913	1547	28030	13422	1162
12:36	ZZZZZZ	1916	1557	27946	13381	1196
12:40	F78009-36F	1640	1323	23756	12447	901
12:44	MP19535-D1	1592	1277	23164	12411	876
12:49	MP19535-S1	1612	1304	23470	12408	878
12:53	MA8534-CCV5	1897	1603	27983	13419	1086
12:57	MA8534-CCB5	1974	1610	29072	13510	1272
13:01	MP19535-S2	1598	1305	23554	12381	872
13:05	MP19535-PS1	1611	1286	23434	12397	889
13:10	MP19535-SD1	1827	1459	26505	13013	1061
13:14	F78009-37F	1543	1234	22796	12344	844
13:18	ZZZZZZ	1825	1483	27322	13482	1110
13:22	ZZZZZZ	1820	1497	26618	13307	1083

INTERNAL STANDARD SUMMARY

Login Number: F78009
Account: TETTNOAK - Tetra Tech, Inc
Project: Holloman AFB; Alamogordo, NM

File ID: SA112410M1.ICP Date Analyzed: 11/24/10 Methods: SW846 6010C
Analyst: RS Run ID: MA8534
Parameters: As,Cd,Cr,Pb,Se

Time	Sample Description	Istd#1	Istd#2	Istd#3	Istd#4	Istd#5
13:26	ZZZZZZ	1890	1533	27751	13324	1150
13:30	ZZZZZZ	1854	1505	27553	13364	1117
13:35	ZZZZZZ	1838	1495	27181	13193	1125
13:39	ZZZZZZ	1862	1508	27547	13326	1143
13:43	MA8534-CCV6	1858	1600	27567	13081	1073
13:47	MA8534-CCB6	1972	1601	29085	13305	1275
13:51	ZZZZZZ	1820	1469	26833	13211	1100
13:55	ZZZZZZ	1862	1522	27237	13192	1140
13:59	ZZZZZZ	1859	1495	27328	13125	1118
14:03	ZZZZZZ	1825	1493	27114	13160	1111
14:07	ZZZZZZ	1755	1429	25488	12878	1006
14:12	ZZZZZZ	1633	1325	23204	12384	887
14:16	ZZZZZZ	1833	1475	27314	13241	1126
14:20	ZZZZZZ	1812	1483	26768	13127	1079
14:24	F78156-6	2093	1834	30738	14558	1161
14:28	MP19516-D1	2119	1860	31285	14771	1164
14:32	MA8534-CCV7	1863	1593	27843	13149	1080
14:36	MA8534-CCB7	1971	1597	29415	13391	1283
14:40	MP19516-S1	2069	1835	30860	15072	1112
14:44	MP19516-S2	2078	1820	30852	14633	1133
14:48	MP19516-PS1	2107	1832	31377	14781	1160
14:52	MP19516-SD1	1994	1658	29882	13798	1241
14:56	ZZZZZZ	2044	1753	30576	14361	1190
15:00	ZZZZZZ	2050	1781	30451	14322	1183
15:04	ZZZZZZ	2054	1771	30587	14259	1188
15:13	ZZZZZZ	2059	1780	30858	14498	1173
15:17	ZZZZZZ	2070	1829	30762	14468	1170
15:21	ZZZZZZ	2075	1850	30945	14541	1151
15:25	MA8534-CCV8	1845	1583	27907	13252	1078
15:29	MA8534-CCB8	1937	1590	28898	13371	1271
15:33	ZZZZZZ	2026	1747	30068	14115	1173
15:37	ZZZZZZ	2095	1855	31345	14843	1132
15:41	ZZZZZZ	2075	1841	31166	14680	1156

INTERNAL STANDARD SUMMARY

Login Number: F78009
Account: TETTNOAK - Tetra Tech, Inc
Project: Holloman AFB; Alamogordo, NM

File ID: SA112410M1.ICP Date Analyzed: 11/24/10 Methods: SW846 6010C
Analyst: RS Run ID: MA8534
Parameters: As,Cd,Cr,Pb,Se

Time	Sample Description	Istd#1	Istd#2	Istd#3	Istd#4	Istd#5
15:45	ZZZZZZ	2021	1812	30252	14574	1117
15:49	ZZZZZZ	2078	1827	31082	14685	1151
15:53	ZZZZZZ	2055	1764	30878	14539	1179
15:57	ZZZZZZ	1989	1736	29923	14354	1112
16:01	ZZZZZZ	2061	1802	30610	14380	1178
16:05	ZZZZZZ	2018	1700	30120	14006	1209
16:10	ZZZZZZ	2064	1844	31134	14597	1155
16:14	MA8534-CCV9	1825	1580	27618	13273	1075
16:18	MA8534-CCB9	1964	1621	29130	13374	1282
16:47	MA8534-CCV10	1831	1567	27768	13244	1073
16:54	MA8534-CCB10	1954	1616	28872	13264	1277
17:01	ZZZZZZ	2089	1829	31311	14693	1165
17:05	ZZZZZZ	2052	1802	30636	14489	1163
17:09	ZZZZZZ	2041	1790	30557	14515	1160
17:13	ZZZZZZ	2045	1779	30380	14473	1171
17:17	ZZZZZZ	2080	1798	30953	14541	1184
17:41	MA8534-CCV11	1825	1562	27564	13348	1069
17:45	MA8534-CCB11	1926	1587	28778	13531	1265
17:54	F78274-1	1909	1574	28962	13706	1239
17:58	MP19532-D1	1874	1544	28514	13735	1226
18:02	MP19532-S1	1865	1561	28445	13755	1218
18:06	MP19532-S2	1912	1565	28523	13687	1237
18:10	MP19532-PS1	1912	1575	29114	13793	1241
18:14	MP19532-SD1	1918	1580	28964	13636	1259
18:18	ZZZZZZ	2144	1893	32160	15482	1190
18:22	ZZZZZZ	1807	1542	27342	13676	1012
18:26	ZZZZZZ	1805	1579	27438	14067	941
18:30	MA8534-CCV12	1834	1574	27518	13370	1075
18:34	MA8534-CCB12	1926	1577	29018	13619	1263
18:38	ZZZZZZ	2147	1899	32276	15713	1159
18:42	ZZZZZZ	1908	1588	28587	13913	1153
18:47	ZZZZZZ	1943	1596	29069	13996	1159
18:51	MP19545-MB1	1943	1568	29378	13993	1273

INTERNAL STANDARD SUMMARY

Login Number: F78009
Account: TETTNOAK - Tetra Tech, Inc
Project: Holloman AFB; Alamogordo, NM

File ID: SA112410M1.ICP Date Analyzed: 11/24/10 Methods: SW846 6010C
Analyst: RS Run ID: MA8534
Parameters: As,Cd,Cr,Pb,Se

Time	Sample Description	Istd#1	Istd#2	Istd#3	Istd#4	Istd#5
18:55	MP19545-B1	1836	1540	27790	13693	1115
18:59	F78236-1	1809	1507	27450	13697	1156
19:03	MP19545-D1	1792	1507	27233	13606	1150
19:07	MP19545-SD1	1909	1574	28619	13698	1237
19:11	MP19545-PS1	1815	1516	27566	13693	1128
19:15	MP19545-S1	1783	1529	27022	13605	1073
19:19	MA8534-CCV13	1798	1553	27292	13475	1062
19:23	MA8534-CCB13	1938	1582	28840	13753	1268
19:27	MP19545-S2	1794	1525	27293	13610	1074
19:31	ZZZZZZ	1871	1536	28536	13885	1191
19:35	ZZZZZZ	1806	1499	27416	13624	1138
19:39	ZZZZZZ	1862	1549	28280	13839	1184
19:43	ZZZZZZ	1810	1468	26481	13343	1066
19:47	ZZZZZZ	1845	1487	27481	13690	1122
19:51	MP19545-MB2	1933	1567	29208	14003	1266
19:56	MP19543-MB1	1912	1575	29037	14064	1263
20:00	MP19543-B1	1856	1532	27867	13845	1123
20:04	F78062-5F	1717	1404	26253	13574	1040
20:08	MA8534-CCV14	1770	1521	27150	13704	1054
20:12	MA8534-CCB14	1876	1546	28616	13985	1243
20:16	MP19543-D1	1687	1385	25506	13526	1033
20:20	MP19543-SD1	1840	1491	27770	13953	1164
20:24	MP19543-PS1	1701	1395	25910	13520	1020
20:28	MP19543-S1	1669	1391	25453	13529	983
20:32	MP19543-S2	1661	1372	25357	13569	984
20:36	ZZZZZZ	1704	1369	25863	13563	1038
20:40	ZZZZZZ	1669	1348	25691	13591	1026
20:44	ZZZZZZ	1631	1338	25222	13547	1003
20:48	ZZZZZZ	1632	1340	25236	13537	1007
20:53	ZZZZZZ	1766	1436	26960	13968	1133
20:57	MA8534-CCV15	1760	1514	27350	13962	1051
21:01	MA8534-CCB15	1851	1530	28592	14109	1231
21:05	ZZZZZZ	1628	1332	25106	13586	992

INTERNAL STANDARD SUMMARY

Login Number: F78009
Account: TETTNOAK - Tetra Tech, Inc
Project: Holloman AFB; Alamogordo, NM

File ID: SA112410M1.ICP Date Analyzed: 11/24/10 Methods: SW846 6010C
Analyst: RS Run ID: MA8534
Parameters: As,Cd,Cr,Pb,Se

Time	Sample Description	Istd#1	Istd#2	Istd#3	Istd#4	Istd#5
21:09	ZZZZZZ	1662	1350	25624	13756	1040
21:14	ZZZZZZ	1641	1329	25202	13698	1010
21:18	ZZZZZZ	1648	1334	25378	13698	995
21:22	ZZZZZZ	1584	1289	24739	13656	966
21:26	ZZZZZZ	1556	1285	24153	13491	955
21:30	ZZZZZZ	1585	1286	24577	13558	976
21:35	ZZZZZZ	1597	1312	25206	13588	990
21:39	ZZZZZZ	1604	1307	25293	13830	1018
21:43	ZZZZZZ	1558	1257	24372	13550	965
21:47	MA8534-CCV16	1671	1454	26298	13871	1020
21:51	MA8534-CCB16	1791	1474	27849	14288	1206
21:56	ZZZZZZ	1586	1285	24539	13482	963
22:36	MA8534-CCV17	1722	1478	27006	14032	1042
22:40	MA8534-CCB17	1801	1483	28204	14325	1212
23:18	MP19537-MB1	1723	1411	27588	14289	1175
23:22	MP19537-B1	1626	1371	26032	13920	1041
23:26	MA8534-CCV18	1647	1416	26036	13738	1014
23:30	MA8534-CCB18	1783	1463	28024	14238	1199
23:34	F78177-1A	1691	1385	26908	14113	1119
23:38	MP19537-D1	1686	1386	26782	14083	1119
23:43	MP19537-SD1	1743	1440	27467	14158	1175
23:47	MP19537-S1	1668	1409	26550	13812	1042
23:51	MP19537-S2	1639	1395	26354	13942	1037
23:54	ZZZZZZ	1696	1412	27082	14102	1134
23:59	ZZZZZZ	1685	1387	26742	14018	1126
00:03	ZZZZZZ	1711	1407	27100	14111	1156
00:07	ZZZZZZ	1737	1427	27512	14086	1164
00:11	ZZZZZZ	1712	1410	27279	14146	1155
00:15	MA8534-CCV19	1645	1436	26580	13794	1013
00:19	MA8534-CCB19	1734	1426	27526	14137	1181
00:23	ZZZZZZ	1730	1422	27268	14016	1160
00:27	ZZZZZZ	1733	1424	27652	14121	1162
00:32	F77565-12R	1717	1402	27408	14201	1158

INTERNAL STANDARD SUMMARY

Login Number: F78009
Account: TETTNOAK - Tetra Tech, Inc
Project: Holloman AFB; Alamogordo, NM

File ID: SA112410M1.ICP Date Analyzed: 11/24/10 Methods: SW846 6010C
Analyst: RS Run ID: MA8534
Parameters: As,Cd,Cr,Pb,Se

Time	Sample Description	Istd#1	Istd#2	Istd#3	Istd#4	Istd#5
00:36	ZZZZZZ	1700	1405	27164	14130	1137
00:40	ZZZZZZ	1702	1419	27303	14115	1127
00:44	MP19537-D2	1746	1425	27502	14143	1171
00:48	MP19537-MB2	1742	1430	27928	14273	1187
00:52	MP19537-B2	1644	1401	26355	13854	1055
01:04	MA8534-CCV20	1693	1460	26944	13952	1036
01:08	MA8534-CCB20	1739	1429	27795	14172	1188
05:16	MA8534-CCV21	1604	1395	26121	13514	1013
05:20	MA8534-CCB21	1701	1427	27384	13718	1180
05:28	MA8534-CRIA3	1683	1408	27297	13784	1138
05:33	MA8534-ICSA2	1426	1370	23474	12693	835
05:37	MA8534-ICSAB2	1409	1359	23413	12624	821
05:41	MA8534-CCV22	1551	1356	25517	13235	985
05:45	MA8534-CCB22	1683	1394	27019	13609	1166

R = Reference for ISTD limits. ! = Outside limits.

LEGEND:

Istd#	Parameter	Limits
Istd#1	Yttrium (2243)	60-125 %
Istd#2	Yttrium (2422)	60-125 %
Istd#3	Yttrium (3242)	60-125 %
Istd#4	Yttrium (3710)	60-125 %
Istd#5	Indium	60-125 %

BLANK RESULTS SUMMARY
Part 1 - Initial and Continuing Calibration Blanks

Login Number: F78009
Account: TETTNOAK - Tetra Tech, Inc
Project: Holloman AFB; Alamogordo, NM

File ID: SA112410M1.ICP Date Analyzed: 11/24/10 Methods: SW846 6010C
QC Limits: result < RL Run ID: MA8534 Units: ug/l

Time:			08:18		09:10		10:29		11:18	
Sample ID:			ICB1		CCB1		CCB2		CCB3	
Metal	RL	IDL	raw	final	raw	final	raw	final	raw	final
Aluminum	200	20	anr							
Antimony	6.0	1	anr							
Arsenic	10	1	0.10	<10	-1.1	<10	-0.50	<10	0.40	<10
Barium	200	1	anr							
Beryllium	4.0	.1	anr							
Cadmium	5.0	.1	0.0	<5.0	-0.10	<5.0	0.10	<5.0	0.20	<5.0
Calcium	1000	50	anr							
Chromium	10	1	0.50	<10	0.30	<10	0.20	<10	0.30	<10
Cobalt	50	1	anr							
Copper	25	1	anr							
Iron	300	34	anr							
Lead	5.0	1	-0.10	<5.0	-0.90	<5.0	-0.30	<5.0	0.0	<5.0
Magnesium	5000	50	anr							
Manganese	15	1	anr							
Molybdenum	50	1								
Nickel	40	1	anr							
Potassium	10000	50	anr							
Selenium	10	2	-0.40	<10	-1.1	<10	-1.6	<10	-1.9	<10
Silver	10	1	anr							
Sodium	10000	750	anr							
Strontium	10	1								
Thallium	10	1	anr							
Tin	50	1								
Titanium	10	1.1								
Vanadium	50	1	anr							
Zinc	20	1	anr							

(*) Outside of QC limits
(anr) Analyte not requested

BLANK RESULTS SUMMARY
Part 1 - Initial and Continuing Calibration Blanks

Login Number: F78009
Account: TETTNOAK - Tetra Tech, Inc
Project: Holloman AFB; Alamogordo, NM

File ID: SA112410M1.ICP Date Analyzed: 11/24/10 Methods: SW846 6010C
QC Limits: result < RL Run ID: MA8534 Units: ug/l

Time:			12:07		12:57		13:47		14:36	
Sample ID:			CCB4		CCB5		CCB6		CCB7	
Metal	RL	IDL	raw	final	raw	final	raw	final	raw	final
Aluminum	200	20	anr							
Antimony	6.0	1	anr							
Arsenic	10	1	0.0	<10	-0.10	<10	0.30	<10	-1.5	<10
Barium	200	1	anr							
Beryllium	4.0	.1	anr							
Cadmium	5.0	.1	0.20	<5.0	0.20	<5.0	0.30	<5.0	-0.10	<5.0
Calcium	1000	50	anr							
Chromium	10	1	0.20	<10	0.40	<10	0.30	<10	0.10	<10
Cobalt	50	1	anr							
Copper	25	1	anr							
Iron	300	34	anr							
Lead	5.0	1	0.30	<5.0	-0.60	<5.0	-0.70	<5.0	-0.50	<5.0
Magnesium	5000	50	anr							
Manganese	15	1	anr							
Molybdenum	50	1								
Nickel	40	1	anr							
Potassium	10000	50	anr							
Selenium	10	2	-0.20	<10	-2.0	<10	-1.8	<10	-0.70	<10
Silver	10	1	anr							
Sodium	10000	750	anr							
Strontium	10	1								
Thallium	10	1	anr							
Tin	50	1								
Titanium	10	1.1								
Vanadium	50	1	anr							
Zinc	20	1	anr							

(*) Outside of QC limits
(anr) Analyte not requested

BLANK RESULTS SUMMARY
Part 1 - Initial and Continuing Calibration Blanks

Login Number: F78009
Account: TETTNOAK - Tetra Tech, Inc
Project: Holloman AFB; Alamogordo, NM

File ID: SA112410M1.ICP Date Analyzed: 11/24/10 Methods: SW846 6010C
QC Limits: result < RL Run ID: MA8534 Units: ug/l

Time:			15:29		16:18		16:54		17:45	
Sample ID:			CCB8		CCB9		CCB10		CCB11	
Metal	RL	IDL	raw	final	raw	final	raw	final	raw	final
Aluminum	200	20	anr							
Antimony	6.0	1	anr							
Arsenic	10	1	-0.40	<10	-0.70	<10	0.20	<10	-0.60	<10
Barium	200	1	anr							
Beryllium	4.0	.1	anr							
Cadmium	5.0	.1	0.0	<5.0	0.10	<5.0	0.20	<5.0	0.10	<5.0
Calcium	1000	50	anr							
Chromium	10	1	0.20	<10	-0.10	<10	-0.20	<10	0.10	<10
Cobalt	50	1	anr							
Copper	25	1	anr							
Iron	300	34	anr							
Lead	5.0	1	0.0	<5.0	-0.40	<5.0	0.30	<5.0	0.20	<5.0
Magnesium	5000	50	anr							
Manganese	15	1	anr							
Molybdenum	50	1								
Nickel	40	1	anr							
Potassium	10000	50	anr							
Selenium	10	2	-2.1	<10	-2.1	<10	0.90	<10	0.60	<10
Silver	10	1	anr							
Sodium	10000	750	anr							
Strontium	10	1								
Thallium	10	1	anr							
Tin	50	1								
Titanium	10	1.1								
Vanadium	50	1	anr							
Zinc	20	1	anr							

(*) Outside of QC limits
(anr) Analyte not requested

BLANK RESULTS SUMMARY
Part 1 - Initial and Continuing Calibration Blanks

Login Number: F78009
Account: TETTNOAK - Tetra Tech, Inc
Project: Holloman AFB; Alamogordo, NM

File ID: SA112410M1.ICP Date Analyzed: 11/24/10 Methods: SW846 6010C
QC Limits: result < RL Run ID: MA8534 Units: ug/l

Time:			18:34		19:23		20:12		21:01	
Sample ID:			CCB12		CCB13		CCB14		CCB15	
Metal	RL	IDL	raw	final	raw	final	raw	final	raw	final
Aluminum	200	20	anr							
Antimony	6.0	1	anr							
Arsenic	10	1	-0.30	<10	0.50	<10	0.40	<10	-0.50	<10
Barium	200	1	anr							
Beryllium	4.0	.1	anr							
Cadmium	5.0	.1	0.20	<5.0	0.30	<5.0	0.30	<5.0	0.30	<5.0
Calcium	1000	50	anr							
Chromium	10	1	0.0	<10	0.30	<10	0.50	<10	0.70	<10
Cobalt	50	1	anr							
Copper	25	1	anr							
Iron	300	34	anr							
Lead	5.0	1	0.90	<5.0	1.0	<5.0	0.90	<5.0	0.20	<5.0
Magnesium	5000	50	anr							
Manganese	15	1	anr							
Molybdenum	50	1								
Nickel	40	1	anr							
Potassium	10000	50	anr							
Selenium	10	2	1.1	<10	0.90	<10	1.6	<10	0.90	<10
Silver	10	1	anr							
Sodium	10000	750	anr							
Strontium	10	1								
Thallium	10	1	anr							
Tin	50	1								
Titanium	10	1.1								
Vanadium	50	1	anr							
Zinc	20	1	anr							

(*) Outside of QC limits
(anr) Analyte not requested

BLANK RESULTS SUMMARY
Part 1 - Initial and Continuing Calibration Blanks

Login Number: F78009
Account: TETTNOAK - Tetra Tech, Inc
Project: Holloman AFB; Alamogordo, NM

File ID: SA112410M1.ICP Date Analyzed: 11/24/10 Methods: SW846 6010C
QC Limits: result < RL Run ID: MA8534 Units: ug/l

Time:			21:51		22:40		23:30		00:19	
Sample ID:			CCB16		CCB17		CCB18		CCB19	
Metal	RL	IDL	raw	final	raw	final	raw	final	raw	final
Aluminum	200	20	anr							
Antimony	6.0	1	anr							
Arsenic	10	1	-1.3	<10	0.60	<10	-0.40	<10	-0.40	<10
Barium	200	1	anr							
Beryllium	4.0	.1	anr							
Cadmium	5.0	.1	0.10	<5.0	0.20	<5.0	0.20	<5.0	0.20	<5.0
Calcium	1000	50	anr							
Chromium	10	1	0.10	<10	0.20	<10	0.30	<10	0.10	<10
Cobalt	50	1	anr							
Copper	25	1	anr							
Iron	300	34	anr							
Lead	5.0	1	-0.80	<5.0	0.10	<5.0	0.60	<5.0	0.50	<5.0
Magnesium	5000	50	anr							
Manganese	15	1	anr							
Molybdenum	50	1								
Nickel	40	1	anr							
Potassium	10000	50	anr							
Selenium	10	2	1.3	<10	-1.1	<10	0.80	<10	0.90	<10
Silver	10	1	anr							
Sodium	10000	750	anr							
Strontium	10	1								
Thallium	10	1	anr							
Tin	50	1								
Titanium	10	1.1								
Vanadium	50	1	anr							
Zinc	20	1	anr							

(*) Outside of QC limits
(anr) Analyte not requested

BLANK RESULTS SUMMARY
Part 1 - Initial and Continuing Calibration Blanks

Login Number: F78009
Account: TETTNOAK - Tetra Tech, Inc
Project: Holloman AFB; Alamogordo, NM

File ID: SA112410M1.ICP Date Analyzed: 11/24/10 Methods: SW846 6010C
QC Limits: result < RL Run ID: MA8534 Units: ug/l

Time:			01:08		05:20		05:45	
Sample ID:			CCB20		CCB21		CCB22	
Metal	RL	IDL	raw	final	raw	final	raw	final
Aluminum	200	20	anr					
Antimony	6.0	1	anr					
Arsenic	10	1	-0.30	<10	1.0	<10	-0.90	<10
Barium	200	1	anr					
Beryllium	4.0	.1	anr					
Cadmium	5.0	.1	0.30	<5.0	0.10	<5.0	0.0	<5.0
Calcium	1000	50	anr					
Chromium	10	1	0.60	<10	0.10	<10	-0.10	<10
Cobalt	50	1	anr					
Copper	25	1	anr					
Iron	300	34	anr					
Lead	5.0	1	1.6	<5.0	0.50	<5.0	0.20	<5.0
Magnesium	5000	50	anr					
Manganese	15	1	anr					
Molybdenum	50	1						
Nickel	40	1	anr					
Potassium	10000	50	anr					
Selenium	10	2	2.6	<10	2.4	<10	2.4	<10
Silver	10	1	anr					
Sodium	10000	750	anr					
Strontium	10	1						
Thallium	10	1	anr					
Tin	50	1						
Titanium	10	1.1						
Vanadium	50	1	anr					
Zinc	20	1	anr					

(*) Outside of QC limits
(anr) Analyte not requested

CALIBRATION CHECK STANDARDS SUMMARY
Initial and Continuing Calibration Checks

Login Number: F78009
Account: TETTNOAK - Tetra Tech, Inc
Project: Holloman AFB; Alamogordo, NM

File ID: SA112410M1.ICP Date Analyzed: 11/24/10 Methods: SW846 6010C
QC Limits: 90 to 110 % Recovery Run ID: MA8534 Units: ug/l

Time:		08:12			09:05			10:26	
Sample ID:	ICV	ICV1		CCV	CCV1		CCV	CCV2	
Metal	True	Results	% Rec	True	Results	% Rec	True	Results	% Rec
Aluminum	anr								
Antimony	anr								
Arsenic	2000	1990	99.5	2000	2010	100.5	2000	2030	101.5
Barium	anr								
Beryllium	anr								
Cadmium	2000	2060	103.0	2000	2040	102.0	2000	2060	103.0
Calcium	anr								
Chromium	2000	2060	103.0	2000	2060	103.0	2000	2080	104.0
Cobalt	anr								
Copper	anr								
Iron	anr								
Lead	2000	2020	101.0	2000	1990	99.5	2000	2010	100.5
Magnesium	anr								
Manganese	anr								
Molybdenum									
Nickel	anr								
Potassium	anr								
Selenium	2000	2040	102.0	2000	2030	101.5	2000	2050	102.5
Silver	anr								
Sodium	anr								
Strontium									
Thallium	anr								
Tin									
Titanium									
Vanadium	anr								
Zinc	anr								

(*) Outside of QC limits
(anr) Analyte not requested

CALIBRATION CHECK STANDARDS SUMMARY
Initial and Continuing Calibration Checks

Login Number: F78009
Account: TETTNOAK - Tetra Tech, Inc
Project: Holloman AFB; Alamogordo, NM

File ID: SA112410M1.ICP Date Analyzed: 11/24/10 Methods: SW846 6010C
QC Limits: 90 to 110 % Recovery Run ID: MA8534 Units: ug/l

Time:		11:14			12:03			12:53	
Sample ID:	CCV	CCV3		CCV	CCV4		CCV	CCV5	
Metal	True	Results	% Rec	True	Results	% Rec	True	Results	% Rec
Aluminum	anr								
Antimony	anr								
Arsenic	2000	2010	100.5	2000	2020	101.0	2000	1980	99.0
Barium	anr								
Beryllium	anr								
Cadmium	2000	2040	102.0	2000	2060	103.0	2000	2020	101.0
Calcium	anr								
Chromium	2000	2070	103.5	2000	2060	103.0	2000	2060	103.0
Cobalt	anr								
Copper	anr								
Iron	anr								
Lead	2000	1990	99.5	2000	2000	100.0	2000	1960	98.0
Magnesium	anr								
Manganese	anr								
Molybdenum									
Nickel	anr								
Potassium	anr								
Selenium	2000	2010	100.5	2000	2040	102.0	2000	2000	100.0
Silver	anr								
Sodium	anr								
Strontium									
Thallium	anr								
Tin									
Titanium									
Vanadium	anr								
Zinc	anr								

(*) Outside of QC limits
(anr) Analyte not requested

CALIBRATION CHECK STANDARDS SUMMARY
Initial and Continuing Calibration Checks

Login Number: F78009
Account: TETTNOAK - Tetra Tech, Inc
Project: Holloman AFB; Alamogordo, NM

File ID: SA112410M1.ICP Date Analyzed: 11/24/10 Methods: SW846 6010C
QC Limits: 90 to 110 % Recovery Run ID: MA8534 Units: ug/l

Time:		13:43			14:32			15:25	
Sample ID:	CCV	CCV6		CCV	CCV7		CCV	CCV8	
Metal	True	Results	% Rec	True	Results	% Rec	True	Results	% Rec
Aluminum	anr								
Antimony	anr								
Arsenic	2000	2020	101.0	2000	2020	101.0	2000	2030	101.5
Barium	anr								
Beryllium	anr								
Cadmium	2000	2060	103.0	2000	2060	103.0	2000	2070	103.5
Calcium	anr								
Chromium	2000	2070	103.5	2000	2080	104.0	2000	2100	105.0
Cobalt	anr								
Copper	anr								
Iron	anr								
Lead	2000	1980	99.0	2000	1980	99.0	2000	1970	98.5
Magnesium	anr								
Manganese	anr								
Molybdenum									
Nickel	anr								
Potassium	anr								
Selenium	2000	2050	102.5	2000	2050	102.5	2000	2070	103.5
Silver	anr								
Sodium	anr								
Strontium									
Thallium	anr								
Tin									
Titanium									
Vanadium	anr								
Zinc	anr								

(*) Outside of QC limits
(anr) Analyte not requested

CALIBRATION CHECK STANDARDS SUMMARY
Initial and Continuing Calibration Checks

Login Number: F78009
Account: TETTNOAK - Tetra Tech, Inc
Project: Holloman AFB; Alamogordo, NM

File ID: SA112410M1.ICP Date Analyzed: 11/24/10 Methods: SW846 6010C
QC Limits: 90 to 110 % Recovery Run ID: MA8534 Units: ug/l

Time:		16:14			16:47			17:41	
Sample ID:	CCV	CCV9		CCV	CCV10		CCV	CCV11	
Metal	True	Results	% Rec	True	Results	% Rec	True	Results	% Rec
Aluminum	anr								
Antimony	anr								
Arsenic	2000	2050	102.5	2000	2010	100.5	2000	2010	100.5
Barium	anr								
Beryllium	anr								
Cadmium	2000	2070	103.5	2000	2050	102.5	2000	2030	101.5
Calcium	anr								
Chromium	2000	2090	104.5	2000	2090	104.5	2000	2060	103.0
Cobalt	anr								
Copper	anr								
Iron	anr								
Lead	2000	1960	98.0	2000	2000	100.0	2000	1990	99.5
Magnesium	anr								
Manganese	anr								
Molybdenum									
Nickel	anr								
Potassium	anr								
Selenium	2000	2090	104.5	2000	2030	101.5	2000	2030	101.5
Silver	anr								
Sodium	anr								
Strontium									
Thallium	anr								
Tin									
Titanium									
Vanadium	anr								
Zinc	anr								

(*) Outside of QC limits
(anr) Analyte not requested

CALIBRATION CHECK STANDARDS SUMMARY
Initial and Continuing Calibration Checks

Login Number: F78009
Account: TETTNOAK - Tetra Tech, Inc
Project: Holloman AFB; Alamogordo, NM

File ID: SA112410M1.ICP Date Analyzed: 11/24/10 Methods: SW846 6010C
QC Limits: 90 to 110 % Recovery Run ID: MA8534 Units: ug/l

Time:		18:30			19:19			20:08	
Sample ID:	CCV	CCV12		CCV	CCV13		CCV	CCV14	
Metal	True	Results	% Rec	True	Results	% Rec	True	Results	% Rec
Aluminum	anr								
Antimony	anr								
Arsenic	2000	1990	99.5	2000	2020	101.0	2000	2030	101.5
Barium	anr								
Beryllium	anr								
Cadmium	2000	2000	100.0	2000	2010	100.5	2000	2000	100.0
Calcium	anr								
Chromium	2000	2040	102.0	2000	2050	102.5	2000	2040	102.0
Cobalt	anr								
Copper	anr								
Iron	anr								
Lead	2000	1970	98.5	2000	1970	98.5	2000	1950	97.5
Magnesium	anr								
Manganese	anr								
Molybdenum									
Nickel	anr								
Potassium	anr								
Selenium	2000	2010	100.5	2000	2040	102.0	2000	2050	102.5
Silver	anr								
Sodium	anr								
Strontium									
Thallium	anr								
Tin									
Titanium									
Vanadium	anr								
Zinc	anr								

(*) Outside of QC limits
(anr) Analyte not requested

CALIBRATION CHECK STANDARDS SUMMARY
Initial and Continuing Calibration Checks

Login Number: F78009
Account: TETTNOAK - Tetra Tech, Inc
Project: Holloman AFB; Alamogordo, NM

File ID: SA112410M1.ICP Date Analyzed: 11/24/10 Methods: SW846 6010C
QC Limits: 90 to 110 % Recovery Run ID: MA8534 Units: ug/l

Time:		20:57			21:47			22:36	
Sample ID:	CCV	CCV15		CCV	CCV16		CCV	CCV17	
Metal	True	Results	% Rec	True	Results	% Rec	True	Results	% Rec
Aluminum	anr								
Antimony	anr								
Arsenic	2000	2030	101.5	2000	2100	105.0	2000	2050	102.5
Barium	anr								
Beryllium	anr								
Cadmium	2000	1980	99.0	2000	2010	100.5	2000	1980	99.0
Calcium	anr								
Chromium	2000	2040	102.0	2000	2060	103.0	2000	2050	102.5
Cobalt	anr								
Copper	anr								
Iron	anr								
Lead	2000	1930	96.5	2000	1930	96.5	2000	1910	95.5
Magnesium	anr								
Manganese	anr								
Molybdenum									
Nickel	anr								
Potassium	anr								
Selenium	2000	2050	102.5	2000	2130	106.5	2000	2080	104.0
Silver	anr								
Sodium	anr								
Strontium									
Thallium	anr								
Tin									
Titanium									
Vanadium	anr								
Zinc	anr								

(*) Outside of QC limits
(anr) Analyte not requested

CALIBRATION CHECK STANDARDS SUMMARY
Initial and Continuing Calibration Checks

Login Number: F78009
Account: TETTNOAK - Tetra Tech, Inc
Project: Holloman AFB; Alamogordo, NM

File ID: SA112410M1.ICP Date Analyzed: 11/24/10 Methods: SW846 6010C
QC Limits: 90 to 110 % Recovery Run ID: MA8534 Units: ug/l

Time:		23:26			00:15			01:04	
Sample ID:	CCV	CCV18		CCV	CCV19		CCV	CCV20	
Metal	True	Results	% Rec	True	Results	% Rec	True	Results	% Rec
Aluminum	anr								
Antimony	anr								
Arsenic	2000	2100	105.0	2000	2110	105.5	2000	2070	103.5
Barium	anr								
Beryllium	anr								
Cadmium	2000	2000	100.0	2000	2020	101.0	2000	1990	99.5
Calcium	anr								
Chromium	2000	2060	103.0	2000	2050	102.5	2000	2070	103.5
Cobalt	anr								
Copper	anr								
Iron	anr								
Lead	2000	1890	94.5	2000	1900	95.0	2000	1890	94.5
Magnesium	anr								
Manganese	anr								
Molybdenum									
Nickel	anr								
Potassium	anr								
Selenium	2000	2130	106.5	2000	2140	107.0	2000	2090	104.5
Silver	anr								
Sodium	anr								
Strontium									
Thallium	anr								
Tin									
Titanium									
Vanadium	anr								
Zinc	anr								

(*) Outside of QC limits
(anr) Analyte not requested

CALIBRATION CHECK STANDARDS SUMMARY
Initial and Continuing Calibration Checks

Login Number: F78009
Account: TETTNOAK - Tetra Tech, Inc
Project: Holloman AFB; Alamogordo, NM

File ID: SA112410M1.ICP Date Analyzed: 11/24/10 Methods: SW846 6010C
QC Limits: 90 to 110 % Recovery Run ID: MA8534 Units: ug/l

Time:		05:16			05:41	
Sample ID:	CCV	CCV21		CCV	CCV22	
Metal	True	Results	% Rec	True	Results	% Rec
Aluminum	anr					
Antimony	anr					
Arsenic	2000	2150	107.5	2000	2180	109.0
Barium	anr					
Beryllium	anr					
Cadmium	2000	2030	101.5	2000	2050	102.5
Calcium	anr					
Chromium	2000	2100	105.0	2000	2110	105.5
Cobalt	anr					
Copper	anr					
Iron	anr					
Lead	2000	1870	93.5	2000	1870	93.5
Magnesium	anr					
Manganese	anr					
Molybdenum						
Nickel	anr					
Potassium	anr					
Selenium	2000	2190	109.5	2000	2220	111.0*(a
Silver	anr					
Sodium	anr					
Strontium						
Thallium	anr					
Tin						
Titanium						
Vanadium	anr					
Zinc	anr					

(*) Outside of QC limits
(anr) Analyte not requested
(a) No samples for Se reported in the area bracketed by this QC.

HIGH STANDARD CHECK SUMMARY

Login Number: F78009
Account: TETTNOAK - Tetra Tech, Inc
Project: Holloman AFB; Alamogordo, NM

File ID: SA112410M1.ICP Date Analyzed: 11/24/10 Methods: SW846 6010C
QC Limits: 95 to 105 % Recovery Run ID: MA8534 Units: ug/l

Time:		08:09	
Sample ID:	HSTD	HSTD1	
Metal	True	Results	% Rec
Aluminum	anr		
Antimony	anr		
Arsenic	4000	4020	100.5
Barium	anr		
Beryllium	anr		
Cadmium	4000	4000	100.0
Calcium	anr		
Chromium	4000	3900	97.5
Cobalt	anr		
Copper	anr		
Iron	anr		
Lead	4000	4030	100.8
Magnesium	anr		
Manganese	anr		
Molybdenum			
Nickel	anr		
Potassium	anr		
Selenium	4000	4020	100.5
Silver	anr		
Sodium	anr		
Strontium			
Thallium	anr		
Tin			
Titanium			
Vanadium	anr		
Zinc	anr		

(*) Outside of QC limits
(anr) Analyte not requested

LOW CALIBRATION CHECK STANDARDS SUMMARY

Login Number: F78009
Account: TETTNOAK - Tetra Tech, Inc
Project: Holloman AFB; Alamogordo, NM

File ID: SA112410M1.ICP Date Analyzed: 11/24/10 Methods: SW846 6010C
QC Limits: CRI 70-130% CRIA 70-130% Run ID: MA8534 Units: ug/l

Time:			08:21		08:44		05:28	
Sample ID:	CRI	CRIA	CRIA1		CRIA2		CRIA3	
Metal	True	True	Results	% Rec	Results	% Rec	Results	% Rec
Aluminum	400	200	anr					
Antimony	10	5.0	anr					
Arsenic	20	10	9.7	97.0			10.3	103.0
Barium	400	200	anr					
Beryllium	10	5.0	anr					
Cadmium	10	5.0	5.3	106.0			5.2	104.0
Calcium	2000	1000	anr					
Chromium	20	10	11.8	118.0			11.0	110.0
Cobalt	100	50	anr					
Copper	50	25	anr					
Iron	600	300						
Lead	10	5.0	4.8	96.0			4.0	80.0
Magnesium	10000	5000	anr					
Manganese	30	15	anr					
Molybdenum	100	50						
Nickel	80	40	anr					
Potassium	20000	10000	anr					
Selenium	20	10	10.8	108.0			10.1	101.0
Silver	20	10	anr					
Sodium	20000	10000	anr					
Strontium	20	10						
Thallium	20	10	anr					
Tin	100	50						
Titanium	20	10						
Vanadium	100	50	anr					
Zinc	40	20	anr					

(*) Outside of QC limits
(anr) Analyte not requested

INTERFERING ELEMENT CHECK STANDARDS SUMMARY
Part 1 - ICSA and ICSAB Standards

Login Number: F78009
Account: TETTNOAK - Tetra Tech, Inc
Project: Holloman AFB; Alamogordo, NM

File ID: SA112410M1.ICP Date Analyzed: 11/24/10 Methods: SW846 6010C
QC Limits: 80 to 120 % Recovery Run ID: MA8534 Units: ug/l

Time:			08:55		09:02		05:33		05:37	
Sample ID:	ICSA	ICSAB	ICSA1		ICSAB1		ICSA2		ICSAB2	
Metal	True	True	Results	% Rec	Results	% Rec	Results	% Rec	Results	% Rec
Aluminum	500000	500000	493000	98.6	491000	98.2	483000	96.6	486000	97.2
Antimony		1000	0.0		992	99.2	3.8		1100	110.0
Arsenic		1000	-0.50		1010	101.0	-4.4		1100	110.0
Barium		500	2.9		510	102.0	-4.6		561	112.2
Beryllium		500	0.0		486	97.2	0.0		442	88.4
Cadmium		1000	0.0		934	93.4	7.1		934	93.4
Calcium	500000	500000	456000	91.2	451000	90.2	376000	75.2*(a)	371000	74.2*(a)
Chromium		500	-0.50		419	83.8	-0.50		430	86.0
Cobalt		500	-0.20		484	96.8	0.20		460	92.0
Copper		500	0.0		501	100.2	-0.40		546	109.2
Iron	200000	200000	186000	93.0	182000	91.0	153000	76.5*(a)	151000	75.5*(a)
Lead		1000	0.0		969	96.9	4.7		905	90.5
Magnesium	500000	500000	516000	103.2	512000	102.4	422000	84.4	421000	84.2
Manganese		500	0.30		425	85.0	0.40		445	89.0
Molybdenum		1000	0.80		957	95.7	0.0		1010	101.0
Nickel		1000	0.0		964	96.4	3.5		910	91.0
Potassium			8.7		-20		40.8		21.6	
Selenium		1000	0.0		992	99.2	3.4		1090	109.0
Silver		1000	0.50		1090	109.0	0.20		1090	109.0
Sodium			-950		-1400		334		-340	
Strontium		1000	-5.5		-5.5	0.0	-3.6		-3.3	0.0
Thallium		1000	0.0		924	92.4	-2.4		882	88.2
Tin		1000	2.8		911	91.1	3.3		840	84.0
Titanium		1000	3.7		4.7	0.5	3.9		4.4	0.4
Vanadium		500	0.50		429	85.8	1.3		462	92.4
Zinc		1000	0.0		889	88.9	1.7		816	81.6

(*) Outside of QC limits
(anr) Analyte not requested
(a) Low recovery due to instrument drift.

BLANK RESULTS SUMMARY
Part 2 - Method Blanks

Login Number: F78009
Account: TETTNOAK - Tetra Tech, Inc
Project: Holloman AFB; Alamogordo, NM

QC Batch ID: MP19507
Matrix Type: AQUEOUS

Methods: SW846 7470A
Units: ug/l

Prep Date:				11/19/10		11/19/10	
Metal	RL	IDL	MDL	MB raw	final	MB raw	final
Mercury	1.0	.071	.05	0.0070	<1.0	0.036	<1.0

Associated samples MP19507: F78009-36, F78009-37, F78009-36F

Results < IDL are shown as zero for calculation purposes
(*) Outside of QC limits
(anr) Analyte not requested

MATRIX SPIKE AND DUPLICATE RESULTS SUMMARY

Login Number: F78009
Account: TETTNOAK - Tetra Tech, Inc
Project: Holloman AFB; Alamogordo, NM

QC Batch ID: MP19507
Matrix Type: AQUEOUS

Methods: SW846 7470A
Units: ug/l

Prep Date: 11/19/10 11/19/10

Metal	F78009-37 Original	DUP	RPD	QC Limits	F78009-37 Original	MS	Spikelot HGFLWS1	% Rec	QC Limits
Mercury	0.0	0.0	NC	0-20	0.0	3.3	3	110.0	80-120

Associated samples MP19507: F78009-36, F78009-37, F78009-36F

Results < IDL are shown as zero for calculation purposes
(*) Outside of QC limits
(N) Matrix Spike Rec. outside of QC limits
(anr) Analyte not requested

MATRIX SPIKE AND DUPLICATE RESULTS SUMMARY

Login Number: F78009
Account: TETTNOAK - Tetra Tech, Inc
Project: Holloman AFB; Alamogordo, NM

QC Batch ID: MP19507
Matrix Type: AQUEOUS

Methods: SW846 7470A
Units: ug/l

Prep Date: 11/19/10

Metal	F78009-37 Original	MSD	Spikelot HGFLWS1	% Rec	MSD RPD	QC Limit
Mercury	0.0	3.2	3	106.7	3.1	20

Associated samples MP19507: F78009-36, F78009-37, F78009-36F

Results < IDL are shown as zero for calculation purposes
(*) Outside of QC limits
(N) Matrix Spike Rec. outside of QC limits
(anr) Analyte not requested

9.5.2

9

SPIKE BLANK AND LAB CONTROL SAMPLE SUMMARY

Login Number: F78009
Account: TETTNOAK - Tetra Tech, Inc
Project: Holloman AFB; Alamogordo, NM

QC Batch ID: MP19507
Matrix Type: AQUEOUS

Methods: SW846 7470A
Units: ug/l

Prep Date: 11/19/10

Metal	BSP Result	Spikelot HGFLWS1	% Rec	QC Limits
Mercury	3.1	3	103.3	80-120

Associated samples MP19507: F78009-36, F78009-37, F78009-36F

Results < IDL are shown as zero for calculation purposes
(*) Outside of QC limits
(anr) Analyte not requested

SERIAL DILUTION RESULTS SUMMARY

Login Number: F78009
Account: TETTNOAK - Tetra Tech, Inc
Project: Holloman AFB; Alamogordo, NM

QC Batch ID: MP19507
Matrix Type: AQUEOUS

Methods: SW846 7470A
Units: ug/l

Prep Date: 11/19/10

Metal	F78009-37 Original	SDL 1:5	%DIF	QC Limits
Mercury	0.00	0.00	NC	0-10

Associated samples MP19507: F78009-36, F78009-37, F78009-36F

Results < IDL are shown as zero for calculation purposes
(*) Outside of QC limits
(anr) Analyte not requested

BLANK RESULTS SUMMARY
Part 2 - Method Blanks

Login Number: F78009
Account: TETTNOAK - Tetra Tech, Inc
Project: Holloman AFB; Alamogordo, NM

QC Batch ID: MP19508 Methods: SW846 7470A
Matrix Type: AQUEOUS Units: ug/l

Prep Date:				11/19/10		11/19/10	
Metal	RL	IDL	MDL	MB raw	final	MB raw	final
Mercury	1.0	.071	.05	0.021	<1.0	-0.054	<1.0

Associated samples MP19508: F78009-37F

Results < IDL are shown as zero for calculation purposes
(*) Outside of QC limits
(anr) Analyte not requested

MATRIX SPIKE AND DUPLICATE RESULTS SUMMARY

Login Number: F78009
Account: TETTNOAK - Tetra Tech, Inc
Project: Holloman AFB; Alamogordo, NM

QC Batch ID: MP19508
Matrix Type: AQUEOUS

Methods: SW846 7470A
Units: ug/l

Prep Date: 11/19/10 11/19/10

Metal	F78009-37F Original	DUP	RPD	QC Limits	F78009-37F Original	MS	Spikelot HGFLWS1	% Rec	QC Limits
Mercury	0.0	0.0	NC	0-20	0.0	3.1	3	103.3	80-120

Associated samples MP19508: F78009-37F

Results < IDL are shown as zero for calculation purposes
(*) Outside of QC limits
(N) Matrix Spike Rec. outside of QC limits
(anr) Analyte not requested

MATRIX SPIKE AND DUPLICATE RESULTS SUMMARY

Login Number: F78009
Account: TETTNOAK - Tetra Tech, Inc
Project: Holloman AFB; Alamogordo, NM

QC Batch ID: MP19508
Matrix Type: AQUEOUS

Methods: SW846 7470A
Units: ug/l

Prep Date: 11/19/10

Metal	F78009-37F Original	MSD	Spikelot HGFLWS1	% Rec	MSD RPD	QC Limit
Mercury	0.0	3.2	3	106.7	3.2	20

Associated samples MP19508: F78009-37F

Results < IDL are shown as zero for calculation purposes
(*) Outside of QC limits
(N) Matrix Spike Rec. outside of QC limits
(anr) Analyte not requested

SPIKE BLANK AND LAB CONTROL SAMPLE SUMMARY

Login Number: F78009
Account: TETTNOAK - Tetra Tech, Inc
Project: Holloman AFB; Alamogordo, NM

QC Batch ID: MP19508
Matrix Type: AQUEOUS

Methods: SW846 7470A
Units: ug/l

Prep Date: 11/19/10

Metal	BSP Result	Spikelot HGFLWS1	% Rec	QC Limits
Mercury	3.1	3	103.3	80-120

Associated samples MP19508: F78009-37F

Results < IDL are shown as zero for calculation purposes
(*) Outside of QC limits
(anr) Analyte not requested

SERIAL DILUTION RESULTS SUMMARY

Login Number: F78009
Account: TETTNOAK - Tetra Tech, Inc
Project: Holloman AFB; Alamogordo, NM

QC Batch ID: MP19508
Matrix Type: AQUEOUS

Methods: SW846 7470A
Units: ug/l

Prep Date: 11/19/10

Metal	F78009-37F Original	SDL 1:5	%DIF	QC Limits
Mercury	0.00	0.00	NC	0-10

Associated samples MP19508: F78009-37F

Results < IDL are shown as zero for calculation purposes
(*) Outside of QC limits
(anr) Analyte not requested

BLANK RESULTS SUMMARY
Part 2 - Method Blanks

Login Number: F78009
Account: TETTNOAK - Tetra Tech, Inc
Project: Holloman AFB; Alamogordo, NM

QC Batch ID: MP19523
Matrix Type: AQUEOUS

Methods: SW846 6010C
Units: ug/l

Prep Date: 11/22/10

Metal	RL	IDL	MDL	MB raw	final
Aluminum	200	20	25		
Antimony	6.0	1	2		
Arsenic	10	1	2	-1.2	<10
Barium	200	1	5	-2.3	<200
Beryllium	4.0	.1	1		
Cadmium	5.0	.1	1	-0.20	<5.0
Calcium	1000	50	100		
Chromium	10	1	1	0.60	<10
Cobalt	50	1	1		
Copper	25	1	2		
Iron	300	34	35		
Lead	5.0	1	1	-0.10	<5.0
Magnesium	5000	50	100		
Manganese	15	1	1		
Molybdenum	50	1	2		
Nickel	40	1	2		
Potassium	10000	50	500		
Selenium	10	2	2	4.3	<10
Silver	10	1	1	-0.30	<10
Sodium	10000	750	1900		
Strontium	10	1	1		
Thallium	10	1	1.9		
Tin	50	1	1		
Titanium	10	1.1	2		
Vanadium	50	1	1		
Zinc	20	1	5		

Associated samples MP19523: F78009-36, F78009-37

Results < IDL are shown as zero for calculation purposes
(*) Outside of QC limits
(anr) Analyte not requested

MATRIX SPIKE AND DUPLICATE RESULTS SUMMARY

Login Number: F78009
Account: TETTNOAK - Tetra Tech, Inc
Project: Holloman AFB; Alamogordo, NM

QC Batch ID: MP19523
Matrix Type: AQUEOUS

Methods: SW846 6010C
Units: ug/l

Metal	F78009-37 Original	DUP	RPD	QC Limits	F78009-37 Original	MS	Spikelot MPFLICP1	% Rec	QC Limits
Prep Date:			11/22/10					11/22/10	
Aluminum									
Antimony									
Arsenic	16.8	25.5 (a)	41.1 (b)	0-20	16.8	2360 (a)	2000	117.2	80-120
Barium	290	295	1.7	0-20	290	2380	2000	104.5	80-120
Beryllium									
Cadmium	0.0	0.0 (a)	NC	0-20	0.0	51.6 (a)	50	103.2	80-120
Calcium									
Chromium	23.2	20.0 (a)	14.8	0-20	23.2	244 (a)	200	110.4	80-120
Cobalt									
Copper									
Iron	anr								
Lead	11.9	8.2 (a)	36.8 (b)	0-20	11.9	524 (a)	500	102.4	80-120
Magnesium									
Manganese									
Molybdenum									
Nickel									
Potassium									
Selenium	16.8	14.8 (a)	12.7	0-20	16.8	2420 (a)	2000	120.0	80-120
Silver	0.0	0.0	NC	0-20	0.0	72.3	50	144.6N(c	80-120
Sodium	anr								
Strontium									
Thallium									
Tin									
Titanium									
Vanadium									
Zinc									

Associated samples MP19523: F78009-36, F78009-37

Results < IDL are shown as zero for calculation purposes
(*) Outside of QC limits
(N) Matrix Spike Rec. outside of QC limits
(anr) Analyte not requested
(a) Elevated reporting limit(s) due to matrix interference.
(b) RPD acceptable due to low duplicate and sample concentrations.
(c) Spike recovery indicates possible matrix interference.

MATRIX SPIKE AND DUPLICATE RESULTS SUMMARY

Login Number: F78009
Account: TETTNOAK - Tetra Tech, Inc
Project: Holloman AFB; Alamogordo, NM

QC Batch ID: MP19523
Matrix Type: AQUEOUS

Methods: SW846 6010C
Units: ug/l

Prep Date: 11/22/10

Metal	F78009-37 Original	MSD	Spikelot MPFLICP1	% Rec	MSD RPD	QC Limit
Aluminum						
Antimony						
Arsenic	16.8	2430 (a)	2000	120.7N(b	2.9	20
Barium	290	2390	2000	105.0	0.4	20
Beryllium						
Cadmium	0.0	53.3 (a)	50	106.6	3.2	20
Calcium						
Chromium	23.2	248 (a)	200	112.4	1.6	20
Cobalt						
Copper						
Iron	anr					
Lead	11.9	529 (a)	500	103.4	0.9	20
Magnesium						
Manganese						
Molybdenum						
Nickel						
Potassium						
Selenium	16.8	2530 (a)	2000	125.7N(b	4.4	20
Silver	0.0	70.3	50	140.6N(b	2.8	20
Sodium	anr					
Strontium						
Thallium						
Tin						
Titanium						
Vanadium						
Zinc						

Associated samples MP19523: F78009-36, F78009-37

Results < IDL are shown as zero for calculation purposes
(*) Outside of QC limits
(N) Matrix Spike Rec. outside of QC limits
(anr) Analyte not requested
(a) Elevated reporting limit(s) due to matrix interference.
(b) Spike recovery indicates possible matrix interference.

SPIKE BLANK AND LAB CONTROL SAMPLE SUMMARY

Login Number: F78009
Account: TETTNOAK - Tetra Tech, Inc
Project: Holloman AFB; Alamogordo, NM

QC Batch ID: MP19523
Matrix Type: AQUEOUS

Methods: SW846 6010C
Units: ug/l

Prep Date: 11/22/10

Metal	BSP Result	Spikelot MPFLICP1	% Rec	QC Limits
Aluminum				
Antimony				
Arsenic	1910	2000	95.5	80-120
Barium	2020	2000	101.0	80-120
Beryllium				
Cadmium	49.9	50	99.8	80-120
Calcium				
Chromium	209	200	104.5	80-120
Cobalt				
Copper				
Iron	anr			
Lead	478	500	95.6	80-120
Magnesium				
Manganese				
Molybdenum				
Nickel				
Potassium				
Selenium	1930	2000	96.5	80-120
Silver	44.5	50	89.0	80-120
Sodium	anr			
Strontium				
Thallium				
Tin				
Titanium				
Vanadium				
Zinc				

Associated samples MP19523: F78009-36, F78009-37

Results < IDL are shown as zero for calculation purposes
(*) Outside of QC limits
(anr) Analyte not requested

SERIAL DILUTION RESULTS SUMMARY

Login Number: F78009
Account: TETTNOAK - Tetra Tech, Inc
Project: Holloman AFB; Alamogordo, NM

QC Batch ID: MP19523
Matrix Type: AQUEOUS

Methods: SW846 6010C
Units: ug/l

Prep Date: 11/22/10

Metal	F78009-37 Original	SDL 1:5	%DIF	QC Limits
Aluminum				
Antimony				
Arsenic	16.8	0.00	100.0(a)	0-10
Barium	290	322	10.9*(b)	0-10
Beryllium				
Cadmium	0.00	0.00	NC	0-10
Calcium				
Chromium	23.2	37.7	62.5 (a)	0-10
Cobalt				
Copper				
Iron	anr			
Lead	11.9	0.00	100.0(a)	0-10
Magnesium				
Manganese				
Molybdenum				
Nickel				
Potassium				
Selenium	16.8	0.00	100.0(a)	0-10
Silver	0.00	0.00	NC	0-10
Sodium	anr			
Strontium				
Thallium				
Tin				
Titanium				
Vanadium				
Zinc				

Associated samples MP19523: F78009-36, F78009-37

Results < IDL are shown as zero for calculation purposes
(*) Outside of QC limits
(anr) Analyte not requested
(a) Percent difference acceptable due to low initial sample concentration (< 50 times IDL).
(b) Serial dilution indicates possible matrix interference.

POST DIGESTATE SPIKE SUMMARY

Login Number: F78009
Account: TETTNOAK - Tetra Tech, Inc
Project: Holloman AFB; Alamogordo, NM

QC Batch ID: MP19523
Matrix Type: AQUEOUS

Methods: SW846 6010C
Units: ug/l

Prep Date: 11/22/10

Metal	Sample ml	Final ml	F78009-37 Raw	Corr.**	PS ug/l	Spike ml	Spike ug/ml	Spike ug/l	% Rec	QC Limits
Aluminum										
Antimony										
Arsenic										
Barium	9.8	10	290	284.2	544.7	0.2	12.5	250	104.2	80-120
Beryllium										
Cadmium										
Calcium										
Chromium										
Cobalt										
Copper										
Iron										
Lead										
Magnesium										
Manganese										
Molybdenum										
Nickel										
Potassium										
Selenium										
Silver	9.8	10	0	0	72.9	0.2	2.5	50	145.8*(a	80-120
Sodium										
Strontium										
Thallium										
Tin										
Titanium										
Vanadium										
Zinc										

Associated samples MP19523: F78009-36, F78009-37

Results < IDL are shown as zero for calculation purposes
(*) Outside of QC limits
(**) Corr. sample result = Raw * (sample volume / final volume)
(anr) Analyte not requested
(a) Spike recovery indicates matrix interference and/or outside control limits due to high level in sample relative to spike amount.

BLANK RESULTS SUMMARY
Part 2 - Method Blanks

Login Number: F78009
Account: TETTNOAK - Tetra Tech, Inc
Project: Holloman AFB; Alamogordo, NM

QC Batch ID: MP19535
Matrix Type: AQUEOUS

Methods: SW846 6010C
Units: ug/l

Prep Date: 11/23/10

Metal	RL	IDL	MDL	MB raw	final
Aluminum	200	20	25		
Antimony	6.0	1	2		
Arsenic	10	1	2	-0.20	<10
Barium	200	1	5	-2.2	<200
Beryllium	4.0	.1	1		
Cadmium	5.0	.1	1	-0.30	<5.0
Calcium	1000	50	100		
Chromium	10	1	1	0.10	<10
Cobalt	50	1	1		
Copper	25	1	2		
Iron	300	34	35		
Lead	5.0	1	1	0.60	<5.0
Magnesium	5000	50	100		
Manganese	15	1	1		
Molybdenum	50	1	2		
Nickel	40	1	2		
Potassium	10000	50	500		
Selenium	10	2	2	1.7	<10
Silver	10	1	1	-0.70	<10
Sodium	10000	750	1900		
Strontium	10	1	1		
Thallium	10	1	1.9		
Tin	50	1	1		
Titanium	10	1.1	2		
Vanadium	50	1	1		
Zinc	20	1	5		

Associated samples MP19535: F78009-36F, F78009-37F

Results < IDL are shown as zero for calculation purposes
(*) Outside of QC limits
(anr) Analyte not requested

MATRIX SPIKE AND DUPLICATE RESULTS SUMMARY

Login Number: F78009
Account: TETTNOAK - Tetra Tech, Inc
Project: Holloman AFB; Alamogordo, NM

QC Batch ID: MP19535
Matrix Type: AQUEOUS

Methods: SW846 6010C
Units: ug/l

Prep Date:			11/23/10					11/23/10	
Metal	F78009-36F Original	DUP	RPD	QC Limits	F78009-36F Original	MS	Spikelot MPFLICP1	% Rec	QC Limits
Aluminum									
Antimony									
Arsenic	6.4	5.6	13.3	0-20	6.4	2410	2000	120.0	80-120
Barium	48.6	50.6	4.0	0-20	48.6	2190	2000	107.1	80-120
Beryllium									
Cadmium	0.0	0.0	NC	0-20	0.0	44.1	50	88.2	80-120
Calcium	anr								
Chromium	0.0	0.0 (a)	NC	0-20	0.0	221 (a)	200	110.5	80-120
Cobalt									
Copper									
Iron	anr								
Lead	0.0	0.0 (a)	NC	0-20	0.0	504 (a)	500	100.8	80-120
Magnesium	anr								
Manganese									
Molybdenum									
Nickel									
Potassium									
Selenium	0.0	0.0 (a)	NC	0-20	0.0	2380 (a)	2000	119.0	80-120
Silver	0.0	0.0	NC	0-20	0.0	69.6	50	139.2N(b	80-120
Sodium									
Strontium									
Thallium									
Tin									
Titanium									
Vanadium									
Zinc	anr								

Associated samples MP19535: F78009-36F, F78009-37F

Results < IDL are shown as zero for calculation purposes
(*) Outside of QC limits
(N) Matrix Spike Rec. outside of QC limits
(anr) Analyte not requested
(a) Elevated reporting limit(s) due to matrix interference.
(b) Spike recovery indicates possible matrix interference.

MATRIX SPIKE AND DUPLICATE RESULTS SUMMARY

Login Number: F78009
Account: TETTNOAK - Tetra Tech, Inc
Project: Holloman AFB; Alamogordo, NM

QC Batch ID: MP19535
Matrix Type: AQUEOUS

Methods: SW846 6010C
Units: ug/l

Prep Date: 11/23/10

Metal	F78009-36F Original	MSD	Spikelot MPFLICP1	% Rec	MSD RPD	QC Limit
Aluminum						
Antimony						
Arsenic	6.4	2410	2000	120.0	0.0	20
Barium	48.6	2190	2000	107.1	0.0	20
Beryllium						
Cadmium	0.0	43.2	50	86.4	2.1	20
Calcium	anr					
Chromium	0.0	211 (a)	200	105.5	4.6	20
Cobalt						
Copper						
Iron	anr					
Lead	0.0	487 (a)	500	97.4	3.4	20
Magnesium	anr					
Manganese						
Molybdenum						
Nickel						
Potassium						
Selenium	0.0	2280 (a)	2000	114.0	4.3	20
Silver	0.0	69.4	50	138.8N(b	0.3	20
Sodium						
Strontium						
Thallium						
Tin						
Titanium						
Vanadium						
Zinc	anr					

Associated samples MP19535: F78009-36F, F78009-37F

Results < IDL are shown as zero for calculation purposes
(*) Outside of QC limits
(N) Matrix Spike Rec. outside of QC limits
(anr) Analyte not requested
(a) Elevated reporting limit(s) due to matrix interference.
(b) Spike recovery indicates possible matrix interference.

SPIKE BLANK AND LAB CONTROL SAMPLE SUMMARY

Login Number: F78009
Account: TETTNOAK - Tetra Tech, Inc
Project: Holloman AFB; Alamogordo, NM

QC Batch ID: MP19535
Matrix Type: AQUEOUS

Methods: SW846 6010C
Units: ug/l

Prep Date: 11/23/10

Metal	BSP Result	Spikelot MPFLICP1	% Rec	QC Limits
Aluminum				
Antimony				
Arsenic	1950	2000	97.5	80-120
Barium	2130	2000	106.5	80-120
Beryllium				
Cadmium	50.2	50	100.4	80-120
Calcium	anr			
Chromium	212	200	106.0	80-120
Cobalt				
Copper				
Iron	anr			
Lead	476	500	95.2	80-120
Magnesium	anr			
Manganese				
Molybdenum				
Nickel				
Potassium				
Selenium	1970	2000	98.5	80-120
Silver	46.7	50	93.4	80-120
Sodium				
Strontium				
Thallium				
Tin				
Titanium				
Vanadium				
Zinc	anr			

Associated samples MP19535: F78009-36F, F78009-37F

Results < IDL are shown as zero for calculation purposes
(*) Outside of QC limits
(anr) Analyte not requested

SERIAL DILUTION RESULTS SUMMARY

Login Number: F78009
Account: TETTNOAK - Tetra Tech, Inc
Project: Holloman AFB; Alamogordo, NM

QC Batch ID: MP19535
Matrix Type: AQUEOUS

Methods: SW846 6010C
Units: ug/l

Prep Date: 11/23/10

Metal	F78009-36F Original	SDL 1:5	%DIF	QC Limits
Aluminum				
Antimony				
Arsenic	6.40	8.90	39.1 (a)	0-10
Barium	48.6	53.8	10.7 (a)	0-10
Beryllium				
Cadmium	0.00	0.00	NC	0-10
Calcium	anr			
Chromium	0.00	0.00	NC	0-10
Cobalt				
Copper				
Iron	anr			
Lead	0.00	0.00	NC	0-10
Magnesium	anr			
Manganese				
Molybdenum				
Nickel				
Potassium				
Selenium	0.00	0.00	NC	0-10
Silver	0.00	0.00	NC	0-10
Sodium				
Strontium				
Thallium				
Tin				
Titanium				
Vanadium				
Zinc	anr			

Associated samples MP19535: F78009-36F, F78009-37F

Results < IDL are shown as zero for calculation purposes
(*) Outside of QC limits
(anr) Analyte not requested
(a) Percent difference acceptable due to low initial sample concentration (< 50 times IDL).

POST DIGESTATE SPIKE SUMMARY

Login Number: F78009
Account: TETTNOAK - Tetra Tech, Inc
Project: Holloman AFB; Alamogordo, NM

QC Batch ID: MP19535
Matrix Type: AQUEOUS

Methods: SW846 6010C
Units: ug/l

Prep Date: 11/23/10

Metal	Sample ml	Final ml	F78009-36F Raw	Corr.**	PS ug/l	Spike ml	Spike ug/ml	Spike ug/l	% Rec	QC Limits
Aluminum										
Antimony										
Arsenic										
Barium										
Beryllium										
Cadmium										
Calcium										
Chromium										
Cobalt										
Copper										
Iron										
Lead										
Magnesium										
Manganese										
Molybdenum										
Nickel										
Potassium										
Selenium										
Silver	9.8	10	0	0	71.2	0.2	2.5	50	142.4*(a	80-120
Sodium										
Strontium										
Thallium										
Tin										
Titanium										
Vanadium										
Zinc										

Associated samples MP19535: F78009-36F, F78009-37F

Results < IDL are shown as zero for calculation purposes
(*) Outside of QC limits
(**) Corr. sample result = Raw * (sample volume / final volume)
(anr) Analyte not requested
(a) Spike recovery indicates matrix interference and/or outside control limits due to high level in sample relative to spike amount.

Southeast ACCUTEST LABORATORIES

General Chemistry

QC Data Summaries

Includes the following where applicable:

- Method Blank and Blank Spike Summaries
- Duplicate Summaries
- Matrix Spike Summaries
- Instrument Runlogs/QC
- Percent Solids Raw Data Summary

METHOD BLANK AND SPIKE RESULTS SUMMARY
GENERAL CHEMISTRY

Login Number: F78009
Account: TETTNOAK - Tetra Tech, Inc
Project: Holloman AFB; Alamogordo, NM

Analyte	Batch ID	RL	MB Result	Units	Spike Amount	BSP Result	BSP %Recov	QC Limits
Solids, Total Dissolved	GN42180	100	0.0	mg/l				

Associated Samples:
Batch GN42180: F78009-36, F78009-37
(*) Outside of QC limits

10.1
10

DUPLICATE RESULTS SUMMARY
GENERAL CHEMISTRY

Login Number: F78009
Account: TETTNOAK - Tetra Tech, Inc
Project: Holloman AFB; Alamogordo, NM

Analyte	Batch ID	QC Sample	Units	Original Result	DUP Result	RPD	QC Limits
Solids, Percent	GN42196	F78009-1	%	94.2	94.6	0.4	0-10%
Solids, Percent	GN42197	F77780-1	%	53.9	51.9	3.8	0-10%
Solids, Total Dissolved	GN42180	F78009-37	mg/l	21700	22000	1.4	0-5%

Associated Samples:
Batch GN42180: F78009-36, F78009-37
Batch GN42196: F78009-1, F78009-10, F78009-11, F78009-12, F78009-13, F78009-14, F78009-15, F78009-16, F78009-17, F78009-18, F78009-19, F78009-2, F78009-20, F78009-3, F78009-4, F78009-5, F78009-6, F78009-7, F78009-8, F78009-9
Batch GN42197: F78009-21, F78009-22, F78009-23, F78009-24, F78009-25, F78009-26, F78009-27, F78009-28, F78009-29, F78009-30, F78009-31, F78009-32, F78009-33
(*) Outside of QC limits

Percent Solids Raw Data Summary

Job Number: F78009
Account: TETTNOAK Tetra Tech, Inc
Project: Holloman AFB; Alamogordo, NM

Sample: F78009-1 **Analyzed:** 15-NOV-10 by TC **Method:** SM19 2540G
ClientID: SS39-DPT-05A

Wet Weight (Total)	8.06	g
Tare Weight	1	g
Dry Weight (Total)	7.65	g
Solids, Percent	94.2	%

Sample: F78009-2 **Analyzed:** 15-NOV-10 by TC **Method:** SM19 2540G
ClientID: SS39-DPT-05B

Wet Weight (Total)	8.4	g
Tare Weight	1.02	g
Dry Weight (Total)	7.35	g
Solids, Percent	85.8	%

Sample: F78009-3 **Analyzed:** 15-NOV-10 by TC **Method:** SM19 2540G
ClientID: SS39-DPT-05C

Wet Weight (Total)	8.86	g
Tare Weight	1	g
Dry Weight (Total)	7.9	g
Solids, Percent	87.8	%

Sample: F78009-4 **Analyzed:** 15-NOV-10 by TC **Method:** SM19 2540G
ClientID: SS39-DPT-06A

Wet Weight (Total)	9.52	g
Tare Weight	1.02	g
Dry Weight (Total)	9.18	g
Solids, Percent	96	%

Sample: F78009-5 **Analyzed:** 15-NOV-10 by TC **Method:** SM19 2540G
ClientID: SS39-DPT-06B

Wet Weight (Total)	8.39	g
Tare Weight	1	g
Dry Weight (Total)	7.34	g
Solids, Percent	85.8	%

Sample: F78009-6 **Analyzed:** 15-NOV-10 by TC **Method:** SM19 2540G
ClientID: SS39-DPT-06C

Wet Weight (Total)	7.81	g
Tare Weight	1	g
Dry Weight (Total)	6.79	g
Solids, Percent	85	%

Percent Solids Raw Data Summary

Job Number: F78009
Account: TETTNOAK Tetra Tech, Inc
Project: Holloman AFB; Alamogordo, NM

Sample: F78009-7 **Analyzed:** 15-NOV-10 by TC **Method:** SM19 2540G
ClientID: SS39-DPT-07A

Wet Weight (Total)	6.79	g
Tare Weight	1.01	g
Dry Weight (Total)	6.51	g
Solids, Percent	95.2	%

Sample: F78009-8 **Analyzed:** 15-NOV-10 by TC **Method:** SM19 2540G
ClientID: SS39-DPT-07B

Wet Weight (Total)	8.83	g
Tare Weight	1	g
Dry Weight (Total)	8.57	g
Solids, Percent	96.7	%

Sample: F78009-9 **Analyzed:** 15-NOV-10 by TC **Method:** SM19 2540G
ClientID: SS39-DPT-07C

Wet Weight (Total)	9.53	g
Tare Weight	1.01	g
Dry Weight (Total)	9.11	g
Solids, Percent	95.1	%

Sample: F78009-10 **Analyzed:** 15-NOV-10 by TC **Method:** SM19 2540G
ClientID: SS39-DPT-08A

Wet Weight (Total)	8.06	g
Tare Weight	1	g
Dry Weight (Total)	7.76	g
Solids, Percent	95.8	%

Sample: F78009-11 **Analyzed:** 15-NOV-10 by TC **Method:** SM19 2540G
ClientID: SS39-DPT-08B

Wet Weight (Total)	7.57	g
Tare Weight	1.07	g
Dry Weight (Total)	7.03	g
Solids, Percent	91.7	%

Sample: F78009-12 **Analyzed:** 15-NOV-10 by TC **Method:** SM19 2540G
ClientID: SS39-DPT-08C

Wet Weight (Total)	7.71	g
Tare Weight	1.01	g
Dry Weight (Total)	7.07	g
Solids, Percent	90.4	%

Percent Solids Raw Data Summary

Job Number: F78009
Account: TETTNOAK Tetra Tech, Inc
Project: Holloman AFB; Alamogordo, NM

Sample: F78009-13 **Analyzed:** 15-NOV-10 by TC **Method:** SM19 2540G
ClientID: SS39-DPT-09A

Wet Weight (Total)	7.66	g
Tare Weight	1.06	g
Dry Weight (Total)	7.3	g
Solids, Percent	94.5	%

Sample: F78009-14 **Analyzed:** 15-NOV-10 by TC **Method:** SM19 2540G
ClientID: SS39-DPT-09B

Wet Weight (Total)	9.75	g
Tare Weight	1.02	g
Dry Weight (Total)	8.81	g
Solids, Percent	89.2	%

Sample: F78009-15 **Analyzed:** 15-NOV-10 by TC **Method:** SM19 2540G
ClientID: SS39-DPT-09C

Wet Weight (Total)	9.49	g
Tare Weight	1.07	g
Dry Weight (Total)	8.92	g
Solids, Percent	93.2	%

Sample: F78009-16 **Analyzed:** 15-NOV-10 by TC **Method:** SM19 2540G
ClientID: SS39-DPT-10A

Wet Weight (Total)	8.67	g
Tare Weight	1.02	g
Dry Weight (Total)	8.35	g
Solids, Percent	95.8	%

Sample: F78009-17 **Analyzed:** 15-NOV-10 by TC **Method:** SM19 2540G
ClientID: SS39-DPT-10B

Wet Weight (Total)	8.95	g
Tare Weight	1.07	g
Dry Weight (Total)	7.94	g
Solids, Percent	87.2	%

Sample: F78009-18 **Analyzed:** 15-NOV-10 by TC **Method:** SM19 2540G
ClientID: SS39-DPT-10C

Wet Weight (Total)	8.52	g
Tare Weight	1.08	g
Dry Weight (Total)	7.77	g
Solids, Percent	89.9	%

Percent Solids Raw Data Summary

Job Number: F78009
Account: TETTNOAK Tetra Tech, Inc
Project: Holloman AFB; Alamogordo, NM

Sample: F78009-19 **Analyzed:** 15-NOV-10 by TC **Method:** SM19 2540G
ClientID: SS39-DPT-11A

Wet Weight (Total)	8.19	g
Tare Weight	1.06	g
Dry Weight (Total)	7.71	g
Solids, Percent	93.3	%

Sample: F78009-20 **Analyzed:** 15-NOV-10 by TC **Method:** SM19 2540G
ClientID: SS39-DPT-11B

Wet Weight (Total)	9.64	g
Tare Weight	1.05	g
Dry Weight (Total)	9.03	g
Solids, Percent	92.9	%

Sample: F78009-21 **Analyzed:** 15-NOV-10 by TC **Method:** SM19 2540G
ClientID: SS39-DPT-11C

Wet Weight (Total)	8.58	g
Tare Weight	1.06	g
Dry Weight (Total)	7.74	g
Solids, Percent	88.8	%

Sample: F78009-22 **Analyzed:** 15-NOV-10 by TC **Method:** SM19 2540G
ClientID: SS39-DPT-12A

Wet Weight (Total)	8.43	g
Tare Weight	1.08	g
Dry Weight (Total)	7.87	g
Solids, Percent	92.4	%

Sample: F78009-23 **Analyzed:** 15-NOV-10 by TC **Method:** SM19 2540G
ClientID: SS39-DPT-12B

Wet Weight (Total)	9.26	g
Tare Weight	1.04	g
Dry Weight (Total)	8.74	g
Solids, Percent	93.7	%

Sample: F78009-24 **Analyzed:** 15-NOV-10 by TC **Method:** SM19 2540G
ClientID: SS39-DPT-12C

Wet Weight (Total)	8.61	g
Tare Weight	1.01	g
Dry Weight (Total)	7.82	g
Solids, Percent	89.6	%

Percent Solids Raw Data Summary

Job Number: F78009
Account: TETTNOAK Tetra Tech, Inc
Project: Holloman AFB; Alamogordo, NM

Sample: F78009-25 **Analyzed:** 15-NOV-10 by TC **Method:** SM19 2540G
ClientID: SS39-DPT-13A

Wet Weight (Total)	8.3	g
Tare Weight	1.02	g
Dry Weight (Total)	7.87	g
Solids, Percent	94.1	%

Sample: F78009-26 **Analyzed:** 15-NOV-10 by TC **Method:** SM19 2540G
ClientID: SS39-DPT-13B

Wet Weight (Total)	8.71	g
Tare Weight	1.08	g
Dry Weight (Total)	8.49	g
Solids, Percent	97.1	%

Sample: F78009-27 **Analyzed:** 15-NOV-10 by TC **Method:** SM19 2540G
ClientID: SS39-DPT-13C

Wet Weight (Total)	7.88	g
Tare Weight	1.09	g
Dry Weight (Total)	6.95	g
Solids, Percent	86.3	%

Sample: F78009-28 **Analyzed:** 15-NOV-10 by TC **Method:** SM19 2540G
ClientID: SS39-DPT-14A

Wet Weight (Total)	8.68	g
Tare Weight	1.04	g
Dry Weight (Total)	8.35	g
Solids, Percent	95.7	%

Sample: F78009-29 **Analyzed:** 15-NOV-10 by TC **Method:** SM19 2540G
ClientID: SS39-DPT-14B

Wet Weight (Total)	8.68	g
Tare Weight	1.01	g
Dry Weight (Total)	8.48	g
Solids, Percent	97.4	%

Sample: F78009-30 **Analyzed:** 15-NOV-10 by TC **Method:** SM19 2540G
ClientID: SS39-DPT-14C

Wet Weight (Total)	8.6	g
Tare Weight	1.01	g
Dry Weight (Total)	7.77	g
Solids, Percent	89.1	%

Percent Solids Raw Data Summary

Job Number: F78009
Account: TETTNOAK Tetra Tech, Inc
Project: Holloman AFB; Alamogordo, NM

Sample: F78009-31 **Analyzed:** 15-NOV-10 by TC **Method:** SM19 2540G
ClientID: SS39-DPT-DUP01

Wet Weight (Total)	8.21	g
Tare Weight	1.04	g
Dry Weight (Total)	7.65	g
Solids, Percent	92.2	%

Sample: F78009-32 **Analyzed:** 15-NOV-10 by TC **Method:** SM19 2540G
ClientID: SS39-DPT-DUP02

Wet Weight (Total)	9.16	g
Tare Weight	1.08	g
Dry Weight (Total)	8.38	g
Solids, Percent	90.3	%

Sample: F78009-33 **Analyzed:** 15-NOV-10 by TC **Method:** SM19 2540G
ClientID: SS39-DPT-DUP03

Wet Weight (Total)	6.81	g
Tare Weight	1.07	g
Dry Weight (Total)	6.54	g
Solids, Percent	95.3	%

Southeast ACCUTEST LABORATORIES

Reissue #1
05/17/11

Technical Report for

Tetra Tech, Inc

Holloman AFB; Alamogordo, NM

100-TEN-T93002-1

Accutest Job Number: F77897

Sampling Dates: 11/05/10 - 11/08/10

Report to:

Tetra Tech

Jeremy.Bennett@tetratech.com

ATTN: Jeremy Bennett

Total number of pages in report: **606**

Test results contained within this data package meet the requirements of the National Environmental Laboratory Accreditation Conference and/or state specific certification programs as applicable.

Harry Behzadi, Ph.D.
Laboratory Director

Client Service contact: Sue Bell 407-425-6700

Certifications: FL (DOH E83510), NC (573), NJ (FL002), MA (FL946), IA (366), LA (03051), KS (E-10327), SC, AK

This report shall not be reproduced, except in its entirety, without the written approval of Accutest Laboratories.
Test results relate only to samples analyzed.

Accutest Laboratories is the sole authority for authorizing edits or modifications to this document. Unauthorized modification of this report is strictly prohibited.

May 16, 2011

Maureen McMyler
Tetra Tech
800 Oak Ridge Turnpike
Suite A 600
Oak Ridge, TN 37838

RE: Accutest job F77897 Reissue

Dear Ms. McMyler,

The final report for job number F77897 has been edited to reflect requested corrections. These edits have been incorporated into the revised report.

Sample IDs of -40, -41 and -42 have been revised.

Accutest apologies for any inconvenience this may have caused. Please feel free to contact us if we can be of further assistance.

Sincerely,

Accutest Laboratories, SE

Florida ♦ 4405 Vineland Road ♦ Suite C-15 ♦ Orlando, FL 32811 ♦ tel: 407 425-6700 ♦ fax: 407 425-0707 ♦ htpp:/www.accutest.com

Table of Contents

-1-

Section 1: Sample Summary 6
Section 2: Case Narrative/Conformance Summary 10
Section 3: Sample Results 16
3.1: F77897-1: SS39-DPT-05A 17
3.2: F77897-2: SS39-DPT-05B 19
3.3: F77897-3: SS39-DPT-05C 21
3.4: F77897-4: SS39-DPT-06A 23
3.5: F77897-5: SS39-DPT-06B 25
3.6: F77897-6: SS39-DPT-06C 27
3.7: F77897-7: SS39-DPT-07A 29
3.8: F77897-8: SS39-DPT-07B 31
3.9: F77897-9: SS39-DPT-07C 33
3.10: F77897-10: SS39-DPT-08A 35
3.11: F77897-11: SS39-DPT-08B 37
3.12: F77897-12: SS39-DPT-08C 39
3.13: F77897-13: SS39-DPT-09A 41
3.14: F77897-14: SS39-DPT-09B 43
3.15: F77897-15: SS39-DPT-09C 45
3.16: F77897-16: SS39-DPT-10A 47
3.17: F77897-17: SS39-DPT-10B 49
3.18: F77897-18: SS39-DPT-10C 51
3.19: F77897-19: SS39-DPT-11A 53
3.20: F77897-20: SS39-DPT-11B 55
3.21: F77897-21: SS39-DPT-11C 57
3.22: F77897-22: SS39-DPT-12A 59
3.23: F77897-23: SS39-DPT-12B 61
3.24: F77897-24: SS39-DPT-12C 63
3.25: F77897-25: SS39-DPT-13A 65
3.26: F77897-26: SS39-DPT-13B 67
3.27: F77897-27: SS39-DPT-13C 69
3.28: F77897-28: SS39-DPT-14A 71
3.29: F77897-29: SS39-DPT-14B 73
3.30: F77897-30: SS39-DPT-14C 75
3.31: F77897-31: SS39-DPT-DUP01 77
3.32: F77897-32: SS39-DPT-DUP02 79
3.33: F77897-33: SS39-DPT-DUP03 81
3.34: F77897-36: SD27-DPT-13A 83
3.35: F77897-37: SD27-DPT-13B 86
3.36: F77897-38: SD27-DPT-13C 89
3.37: F77897-39: SD27-ER-11052010 92
3.38: F77897-40: SS39-TCLP-SUMP2 99
3.39: F77897-41: SS39-TCLP-SUMP1 100

Table of Contents

3.40: F77897-42: SS39-IGN 101
Section 4: Misc. Forms 102
4.1: Certification Exceptions 103
4.2: Chain of Custody 104
Section 5: GC/MS Volatiles - QC Data Summaries 108
5.1: Method Blank Summary 109
5.2: Blank Spike Summary 113
5.3: Matrix Spike/Matrix Spike Duplicate Summary 117
5.4: Instrument Performance Checks (BFB) 121
5.5: Internal Standard Area Summaries 126
5.6: Surrogate Recovery Summaries 128
5.7: Initial and Continuing Calibration Summaries 129
Section 6: GC/MS Semi-volatiles - QC Data Summaries 150
6.1: Method Blank Summary 151
6.2: Blank Spike Summary 156
6.3: Matrix Spike/Matrix Spike Duplicate Summary 160
6.4: Instrument Performance Checks (DFTPP) 162
6.5: Internal Standard Area Summaries 172
6.6: Surrogate Recovery Summaries 177
6.7: Initial and Continuing Calibration Summaries 179
Section 7: GC Volatiles - QC Data Summaries 233
7.1: Method Blank Summary 234
7.2: Blank Spike Summary 235
7.3: Matrix Spike/Matrix Spike Duplicate Summary 236
7.4: Surrogate Recovery Summaries 237
7.5: GC Surrogate Retention Time Summaries 238
7.6: Initial and Continuing Calibration Summaries 240
Section 8: GC Semi-volatiles - QC Data Summaries 246
8.1: Method Blank Summary 247
8.2: Blank Spike Summary 251
8.3: Matrix Spike/Matrix Spike Duplicate Summary 255
8.4: Surrogate Recovery Summaries 259
8.5: GC Surrogate Retention Time Summaries 262
8.6: Initial and Continuing Calibration Summaries 274
Section 9: Metals Analysis - QC Data Summaries 293
9.1: Inst QC MA8499: Hg 294
9.2: Inst QC MA8503: Hg 300
9.3: Inst QC MA8504: As,Ba,Cd,Cr,Pb,Se,Ag 311
9.4: Inst QC MA8506: Hg 340
9.5: Inst QC MA8509: Pb 349
9.6: Inst QC MA8510: As,Ba,Cd,Cr,Pb,Se,Ag 376
9.7: Inst QC MA8512: Cr,Pb,Se 413

Table of Contents

9.8: Inst QC MA8516: As,Ba,Cd,Cr,Pb,Se,Ag 437
9.9: Inst QC MA8518: Hg 468
9.10: Inst QC MA8519: As,Ba,Cd,Cr,Pb,Se,Ag 478
9.11: Inst QC MA8522: Ba,Cr,Se 513
9.12: Prep QC MP19449: Hg 544
9.13: Prep QC MP19459: Hg 549
9.14: Prep QC MP19463: As,Ba,Cd,Cr,Pb,Se,Ag 554
9.15: Prep QC MP19469: Hg 559
9.16: Prep QC MP19470: Hg 564
9.17: Prep QC MP19474: Pb 569
9.18: Prep QC MP19483: As,Ba,Cd,Cr,Pb,Se,Ag 575
9.19: Prep QC MP19486: As,Ba,Cd,Cr,Pb,Se,Ag 581
9.20: Prep QC MP19492: As,Ba,Cd,Cr,Pb,Se,Ag 587
9.21: Prep QC MP19500: Hg 593
Section 10: General Chemistry - QC Data Summaries 598
10.1: Duplicate Results Summary 599
10.2: Percent Solids Raw Data Summary 600

Accutest Laboratories

Sample Summary

Tetra Tech, Inc

Job No: F77897

Holloman AFB; Alamogordo, NM
Project No: 100-TEN-T93002-1

Sample Number	Collected Date	Time	By	Received	Matrix Code	Type	Client Sample ID
F77897-1	11/06/10	13:20	SS	11/09/10	SO	Soil	SS39-DPT-05A
F77897-2	11/06/10	13:30	SS	11/09/10	SO	Soil	SS39-DPT-05B
F77897-3	11/06/10	13:40	SS	11/09/10	SO	Soil	SS39-DPT-05C
F77897-4	11/06/10	13:55	SS	11/09/10	SO	Soil	SS39-DPT-06A
F77897-5	11/06/10	14:00	SS	11/09/10	SO	Soil	SS39-DPT-06B
F77897-6	11/06/10	14:10	SS	11/09/10	SO	Soil	SS39-DPT-06C
F77897-7	11/06/10	14:25	SS	11/09/10	SO	Soil	SS39-DPT-07A
F77897-8	11/06/10	14:35	SS	11/09/10	SO	Soil	SS39-DPT-07B
F77897-9	11/06/10	14:50	SS	11/09/10	SO	Soil	SS39-DPT-07C
F77897-10	11/06/10	15:10	SS	11/09/10	SO	Soil	SS39-DPT-08A
F77897-11	11/06/10	15:20	SS	11/09/10	SO	Soil	SS39-DPT-08B
F77897-12	11/06/10	15:25	SS	11/09/10	SO	Soil	SS39-DPT-08C
F77897-13	11/06/10	15:40	SS	11/09/10	SO	Soil	SS39-DPT-09A

Soil samples reported on a dry weight basis unless otherwise indicated on result page.

Sample Summary
(continued)

Tetra Tech, Inc

Job No: F77897

Holloman AFB; Alamogordo, NM
Project No: 100-TEN-T93002-1

Sample Number	Collected Date	Time	By	Received	Matrix Code	Type	Client Sample ID
F77897-14	11/06/10	15:50	SS	11/09/10	SO	Soil	SS39-DPT-09B
F77897-15	11/06/10	16:00	SS	11/09/10	SO	Soil	SS39-DPT-09C
F77897-16	11/06/10	16:10	SS	11/09/10	SO	Soil	SS39-DPT-10A
F77897-17	11/06/10	16:20	SS	11/09/10	SO	Soil	SS39-DPT-10B
F77897-18	11/06/10	16:35	SS	11/09/10	SO	Soil	SS39-DPT-10C
F77897-19	11/07/10	15:50	SS	11/09/10	SO	Soil	SS39-DPT-11A
F77897-20	11/07/10	16:00	SS	11/09/10	SO	Soil	SS39-DPT-11B
F77897-21	11/07/10	16:05	SS	11/09/10	SO	Soil	SS39-DPT-11C
F77897-22	11/07/10	16:15	SS	11/09/10	SO	Soil	SS39-DPT-12A
F77897-23	11/07/10	16:20	SS	11/09/10	SO	Soil	SS39-DPT-12B
F77897-24	11/07/10	16:25	SS	11/09/10	SO	Soil	SS39-DPT-12C
F77897-24D	11/07/10	16:25	SS	11/09/10	SO	Soil Dup/MSD	SS39-DPT-12C
F77897-24S	11/07/10	16:25	SS	11/09/10	SO	Soil Matrix Spike	SS39-DPT-12C

Soil samples reported on a dry weight basis unless otherwise indicated on result page.

Sample Summary
(continued)

Tetra Tech, Inc

Job No: F77897

Holloman AFB; Alamogordo, NM
Project No: 100-TEN-T93002-1

Sample Number	Collected Date	Time	By	Received	Matrix Code	Type	Client Sample ID
F77897-25	11/07/10	16:40	SS	11/09/10	SO	Soil	SS39-DPT-13A
F77897-26	11/07/10	16:45	SS	11/09/10	SO	Soil	SS39-DPT-13B
F77897-27	11/07/10	16:50	SS	11/09/10	SO	Soil	SS39-DPT-13C
F77897-28	11/07/10	17:00	SS	11/09/10	SO	Soil	SS39-DPT-14A
F77897-29	11/07/10	17:10	SS	11/09/10	SO	Soil	SS39-DPT-14B
F77897-30	11/07/10	15:17	SS	11/09/10	SO	Soil	SS39-DPT-14C
F77897-31	11/06/10	14:50	SS	11/09/10	SO	Soil	SS39-DPT-DUP01
F77897-32	11/06/10	16:35	SS	11/09/10	SO	Soil	SS39-DPT-DUP02
F77897-33	11/07/10	17:00	SS	11/09/10	SO	Soil	SS39-DPT-DUP03
F77897-34	11/08/10	11:45	SS	11/09/10	SO	Trip Blank Soil	SS39-TB-11082010-A
F77897-35	11/08/10	11:45	SS	11/09/10	SO	Trip Blank Soil	SS39-TB-11082010-E
F77897-36	11/05/10	13:10	SS	11/09/10	SO	Soil	SD27-DPT-13A
F77897-37	11/05/10	13:20	SS	11/09/10	SO	Soil	SD27-DPT-13B

Soil samples reported on a dry weight basis unless otherwise indicated on result page.

Sample Summary
(continued)

Tetra Tech, Inc

Job No: F77897

Holloman AFB; Alamogordo, NM
Project No: 100-TEN-T93002-1

Sample Number	Collected Date	Time	By	Received	Matrix Code	Type	Client Sample ID
F77897-38	11/05/10	13:40	SS	11/09/10	SO	Soil	SD27-DPT-13C
F77897-39	11/05/10	17:00	SS	11/09/10	AQ	Equipment Blank	SD27-ER-11052010
F77897-40	11/07/10	18:30	SS	11/09/10	SO	Soil	SS39-TCLP-SUMP2
F77897-41	11/07/10	17:20	SS	11/09/10	SO	Soil	SS39-TCLP-SUMP1
F77897-42	11/07/10	17:20	SS	11/09/10	SO	Soil	SS39-IGN

Soil samples reported on a dry weight basis unless otherwise indicated on result page.

SAMPLE DELIVERY GROUP CASE NARRATIVE

Client: Tetra Tech, Inc **Job** F77897

Site: Holloman AFB; Alamogordo, NM **Report Date:** 12/1/2010 10:14:23 AM

40 Samples were collected on/between 11/05/2010 and 11/07/2010 and were received at Accutest SE on 11/09/2010 properly preserved, at 4.2 Deg. C and intact. These Samples received an Accutest job number of F77897. A listing of the Laboratory Sample ID, Client Sample ID and dates of collection are presented in the Results Summary Section of this report.

Except as noted below, all method specified calibrations and quality control performance criteria were met for this job. For more information, please refer to QC summary pages.

Volatiles by GCMS by Method SW846 8260B

Matrix: AQ **Batch ID:** VC2986

All samples were analyzed within the recommended method holding time.

All method blanks for this batch meet method specific criteria.

Samples F77883-24MS, F77883-24MSD were used as the QC samples indicated.

Blank Spike Recoverys for Acetone, Dichlorodifluoromethane are outside control limits.

Matrix Spike Recoverys for 1,1-Dichloroethylene, 1,2-Dichloroethane, 2-Chloroethyl vinyl ether, Bromodichloromethane, Dichlorodifluoromethane, Freon 113, Methyl iodide, Methyl Tert Butyl Ether, Trans-1,4-Dichloro-2-Butene are outside control limits. Probable cause due to matrix interference.

Matrix Spike Duplicate Recoverys for 1,1-Dichloroethylene, 1,2-Dichloroethane, 2-Chloroethyl vinyl ether, Bromodichloromethane, Dichlorodifluoromethane, Methyl iodide, Methyl Tert Butyl Ether, Trans-1,4-Dichloro-2-Butene are outside control limits. Probable cause due to matrix interference.

Matrix: AQ **Batch ID:** VF1348

Samples F78101-29MS, F78101-29MSD were used as the QC samples indicated.

All method blanks for this batch meet method specific criteria.

The following samples were re-run outside of holding time for method SW846 8260B: F77897-39. Sample re-analyzed beyond hold time; reported results are considered minimum values.

Blank Spike Recovery for cis-1,4-Dichloro-2-Butene is outside control limits.

Matrix Spike Recovery for Propionitrile is outside control limits. Probable cause due to matrix interference.

Matrix Spike Duplicate Recoverys for Acetonitrile, cis-1,4-Dichloro-2-Butene are outside control limits. Probable cause due to matrix interference.

RPDs for MSD for Acetonitrile, Ethyl methacrylate, Methyl methacrylate, Propionitrile are outside control limits for sample F78101-29MSD. Probable cause due to sample non-homogeneity.

F77897-39: Sample re-analyzed beyond hold time; reported results are considered minimum values.

Extractables by GCMS by Method SW846 8270D

Matrix: AQ **Batch ID:** OP35019

All samples were extracted within the recommended method holding time.

All samples were analyzed within the recommended method holding time.

Samples F77970-2MS, F77970-2MSD were used as the QC samples indicated.

All method blanks for this batch meet method specific criteria.

RPDs for MSD for Acenaphthene, Acenaphthylene, Fluorene are outside control limits for sample OP35019-MSD. Probable cause due to sample non-homogeneity.

Matrix: SO **Batch ID:** OP35016

All samples were extracted within the recommended method holding time.

All samples were analyzed within the recommended method holding time.

Samples F77964-10MS, F77964-10MSD were used as the QC samples indicated.

All method blanks for this batch meet method specific criteria.

Volatiles by GC by Method SW846 8015C

Matrix: AQ **Batch ID:** GCD4155

All samples were analyzed within the recommended method holding time.

Samples F77976-1MS, F77976-1MSD were used as the QC samples indicated.

All method blanks for this batch meet method specific criteria.

Samples F77976-1MS, F77976-1MSD have surrogates outside control limits. Probable cause due to matrix interference.

F77976-1MS, F77976-1MSD for aaa-Trifluorotoluene: Result reported from PID.

F77976-1MS, F77976-1MSD for aaa-Trifluorotoluene: Outside control limits due to matrix interference.

Extractables by GC by Method SW846 8015C

Matrix: AQ **Batch ID:** OP35007

All samples were extracted within the recommended method holding time.

All samples were analyzed within the recommended method holding time.

Samples F77889-39MS, F77889-39MSD were used as the QC samples indicated.

All method blanks for this batch meet method specific criteria.

Matrix Spike Duplicate Recovery for TPH (C10-C28) is outside control limits. Probable cause due to matrix interference.

Matrix: SO **Batch ID:** OP34995

All samples were extracted within the recommended method holding time.

All samples were analyzed within the recommended method holding time.

All method blanks for this batch meet method specific criteria.

Samples F77897-1MS, F77897-1MSD were used as the QC samples indicated.

F77897-11 for TPH (C10-C28): Petroleum hydrocarbon pattern extends beyond C28.

Matrix: SO **Batch ID:** OP34997

All samples were extracted within the recommended method holding time.

All samples were analyzed within the recommended method holding time.

All method blanks for this batch meet method specific criteria.

Samples F77897-24MS, F77897-24MSD were used as the QC samples indicated.

F77897-17 for TPH (C10-C28): Petroleum hydrocarbon pattern extends beyond C28.

Matrix: SO **Batch ID:** OP35013

All samples were extracted within the recommended method holding time.

All samples were analyzed within the recommended method holding time.

Samples F77899-3MS, F77899-3MSD were used as the QC samples indicated.

All method blanks for this batch meet method specific criteria.

F77897-37 for TPH (C10-C28): Petroleum hydrocarbon pattern begins before C10.

Metals by Method SW846 6010C

Matrix: AQ **Batch ID:** MP19463

All samples were digested within the recommended method holding time.

All samples were analyzed within the recommended method holding time.

All method blanks for this batch meet method specific criteria.

Samples F77889-38DUP, F77889-38MS, F77889-38MSD, F77889-38SDL were used as the QC samples for metals.

RPD for Duplicate for Cadmium is outside control limits for sample MP19463-D1. RPD acceptable due to low duplicate and sample concentrations.

RPDs for Serial Dilution for Arsenic, Cadmium, Chromium, Lead are outside control limits for sample MP19463-SD1. Percent difference acceptable due to low initial sample concentration (< 50 times IDL).

Matrix: LEACHATE **Batch ID:** MP19474

All samples were digested within the recommended method holding time.

All samples were analyzed within the recommended method holding time.

All method blanks for this batch meet method specific criteria.

Samples F77771-1AMS, F77771-1AMSD, F77771-1ASDL, F77897-41DUP were used as the QC samples for metals.

Metals by Method SW846 6010C

Matrix: SO **Batch ID:** MP19483

All samples were digested within the recommended method holding time.

All samples were analyzed within the recommended method holding time.

All method blanks for this batch meet method specific criteria.

Samples F77897-1MS, F77897-1MSD, F77897-1PS, F77897-1SDL, F77897-1DUP were used as the QC samples for metals.

Matrix Spike Recovery for Cadmium is outside control limits. Spike recovery indicates possible matrix interference and/or sample nonhomogeneity.

Matrix Spike Duplicate Recoverys for Cadmium, Lead are outside control limits. Probable cause due to matrix interference.

RPDs for Duplicate for Chromium, Lead are outside control limits for sample MP19483-D1. RPD acceptable due to low duplicate and sample concentrations.

RPDs for Serial Dilution for Arsenic, Cadmium, Chromium, Lead are outside control limits for sample MP19483-SD1. Percent difference acceptable due to low initial sample concentration (< 50 times IDL).

F77897-2 for Selenium: Elevated reporting limit(s) due to matrix interference.

F77897-7 for Selenium: Elevated reporting limit(s) due to matrix interference.

F77897-7 for Chromium: Elevated reporting limit(s) due to matrix interference.

F77897-6 for Selenium: Elevated reporting limit(s) due to matrix interference.

F77897-6 for Chromium: Elevated reporting limit(s) due to matrix interference.

F77897-5 for Selenium: Elevated reporting limit(s) due to matrix interference.

F77897-4 for Selenium: Elevated reporting limit(s) due to matrix interference.

F77897-17 for Lead: Elevated reporting limit(s) due to matrix interference.

F77897-3 for Chromium: Elevated reporting limit(s) due to matrix interference.

F77897-8 for Chromium: Elevated reporting limit(s) due to matrix interference.

F77897-2 for Chromium: Elevated reporting limit(s) due to matrix interference.

F77897-1 for Selenium: Elevated reporting limit(s) due to matrix interference.

F77897-1 for Chromium: Elevated reporting limit(s) due to matrix interference.

F77897-18 for Lead: Elevated reporting limit(s) due to matrix interference.

F77897-19 for Lead: Elevated reporting limit(s) due to matrix interference.

F77897-5 for Chromium: Elevated reporting limit(s) due to matrix interference.

F77897-3 for Selenium: Elevated reporting limit(s) due to matrix interference.

F77897-16 for Chromium: Elevated reporting limit(s) due to matrix interference.

F77897-3 for Lead: Elevated reporting limit(s) due to matrix interference.

F77897-8 for Selenium: Elevated reporting limit(s) due to matrix interference.

F77897-5 for Lead: Elevated reporting limit(s) due to matrix interference.

F77897-4 for Chromium: Elevated reporting limit(s) due to matrix interference.

F77897-7 for Lead: Elevated reporting limit(s) due to matrix interference.

F77897-8 for Lead: Elevated reporting limit(s) due to matrix interference.

F77897-10 for Chromium: Elevated reporting limit(s) due to matrix interference.

F77897-10 for Selenium: Elevated reporting limit(s) due to matrix interference.

F77897-2 for Lead: Elevated reporting limit(s) due to matrix interference.

F77897-13 for Selenium: Elevated reporting limit(s) due to matrix interference.

F77897-4 for Lead: Elevated reporting limit(s) due to matrix interference.

F77897-16 for Selenium: Elevated reporting limit(s) due to matrix interference.

F77897-9 for Lead: Elevated reporting limit(s) due to matrix interference.

F77897-10 for Lead: Elevated reporting limit(s) due to matrix interference.

F77897-11 for Lead: Elevated reporting limit(s) due to matrix interference.

F77897-12 for Lead: Elevated reporting limit(s) due to matrix interference.

F77897-13 for Lead: Elevated reporting limit(s) due to matrix interference.

F77897-14 for Lead: Elevated reporting limit(s) due to matrix interference.

F77897-15 for Lead: Elevated reporting limit(s) due to matrix interference.

F77897-16 for Lead: Elevated reporting limit(s) due to matrix interference.

F77897-13 for Chromium: Elevated reporting limit(s) due to matrix interference.

Metals by Method SW846 6010C

Matrix: SO **Batch ID:** MP19483

F77897-17 for Chromium: Elevated reporting limit(s) due to matrix interference.

F77897-12 for Chromium: Elevated reporting limit(s) due to matrix interference.

F77897-11 for Chromium: Elevated reporting limit(s) due to matrix interference.

F77897-9 for Selenium: Elevated reporting limit(s) due to matrix interference.

F77897-12 for Selenium: Elevated reporting limit(s) due to matrix interference.

F77897-14 for Chromium: Elevated reporting limit(s) due to matrix interference.

F77897-9 for Chromium: Elevated reporting limit(s) due to matrix interference.

F77897-6 for Lead: Elevated reporting limit(s) due to matrix interference.

F77897-11 for Selenium: Elevated reporting limit(s) due to matrix interference.

F77897-15 for Selenium: Elevated reporting limit(s) due to matrix interference.

F77897-14 for Selenium: Elevated reporting limit(s) due to matrix interference.

F77897-17 for Selenium: Elevated reporting limit(s) due to matrix interference.

F77897-18 for Chromium: Elevated reporting limit(s) due to matrix interference.

F77897-18 for Selenium: Elevated reporting limit(s) due to matrix interference.

F77897-19 for Chromium: Elevated reporting limit(s) due to matrix interference.

F77897-19 for Selenium: Elevated reporting limit(s) due to matrix interference.

F77897-1 for Lead: Elevated reporting limit(s) due to matrix interference.

F77897-15 for Chromium: Elevated reporting limit(s) due to matrix interference.

Matrix: SO **Batch ID:** MP19486

All samples were digested within the recommended method holding time.

All samples were analyzed within the recommended method holding time.

All method blanks for this batch meet method specific criteria.

Samples F77897-24MS, F77897-24MSD, F77897-24PS, F77897-24SDL, F77897-24DUP were used as the QC samples for metals.

Matrix Spike Recoverys for Barium, Chromium are outside control limits. Spike recovery indicates possible matrix interference and/or sample nonhomogeneity.

Matrix Spike Duplicate Recovery for Barium is outside control limits. Probable cause due to matrix interference.

RPDs for Duplicate for Barium, Chromium are outside control limits for sample MP19486-D1. High RPD due to possible sample nonhomogeneity.

MP19486-D1 for Chromium: RPD acceptable due to low duplicate and sample concentrations.

RPDs for Serial Dilution for Arsenic, Cadmium are outside control limits for sample MP19486-SD1. Percent difference acceptable due to low initial sample concentration (< 50 times IDL).

F77897-24 for Selenium: Elevated reporting limit(s) due to matrix interference.

F77897-20 for Chromium: Elevated reporting limit(s) due to matrix interference.

F77897-24 for Chromium: Elevated reporting limit(s) due to matrix interference.

F77897-29 for Lead: Elevated reporting limit(s) due to matrix interference.

F77897-27 for Lead: Elevated reporting limit(s) due to matrix interference.

F77897-21 for Lead: Elevated reporting limit(s) due to matrix interference.

F77897-28 for Lead: Elevated reporting limit(s) due to matrix interference.

F77897-27 for Chromium: Elevated reporting limit(s) due to matrix interference.

F77897-20 for Selenium: Elevated reporting limit(s) due to matrix interference.

F77897-21 for Selenium: Elevated reporting limit(s) due to matrix interference.

F77897-22 for Chromium: Elevated reporting limit(s) due to matrix interference.

F77897-22 for Selenium: Elevated reporting limit(s) due to matrix interference.

F77897-25 for Chromium: Elevated reporting limit(s) due to matrix interference.

F77897-21 for Chromium: Elevated reporting limit(s) due to matrix interference.

F77897-24 for Lead: Elevated reporting limit(s) due to matrix interference.

F77897-26 for Selenium: Elevated reporting limit(s) due to matrix interference.

F77897-25 for Selenium: Elevated reporting limit(s) due to matrix interference.

F77897-28 for Chromium: Elevated reporting limit(s) due to matrix interference.

Metals by Method SW846 6010C

Matrix: SO **Batch ID:** MP19486

F77897-27 for Selenium: Elevated reporting limit(s) due to matrix interference.

F77897-29 for Selenium: Elevated reporting limit(s) due to matrix interference.

F77897-23 for Chromium: Elevated reporting limit(s) due to matrix interference.

F77897-26 for Chromium: Elevated reporting limit(s) due to matrix interference.

F77897-23 for Selenium: Elevated reporting limit(s) due to matrix interference.

F77897-29 for Chromium: Elevated reporting limit(s) due to matrix interference.

F77897-28 for Selenium: Elevated reporting limit(s) due to matrix interference.

Matrix: SO **Batch ID:** MP19492

All samples were digested within the recommended method holding time.

All samples were analyzed within the recommended method holding time.

All method blanks for this batch meet method specific criteria.

Samples F77904-1DUP, F77904-1MS, F77904-1MSD, F77904-1PS, F77904-1SDL were used as the QC samples for metals.

Matrix Spike Duplicate Recovery for Silver is outside control limits. Probable cause due to matrix interference.

RPDs for Serial Dilution for Arsenic, Barium, Chromium are outside control limits for sample MP19492-SD1. Percent difference acceptable due to low initial sample concentration (< 50 times IDL).

MP19492-SD1 for Barium, Chromium: Serial dilution indicates possible matrix interference.

MP19492-PS1 for Chromium: Spike recovery indicates matrix interference and/or outside control limits due to high level in sample relative to spike amount.

F77897-32 for Selenium: Elevated reporting limit(s) due to matrix interference.

F77897-38 for Chromium: Elevated reporting limit(s) due to matrix interference.

F77897-32 for Chromium: Elevated reporting limit(s) due to matrix interference.

F77897-30 for Chromium: Elevated reporting limit(s) due to matrix interference.

F77897-36 for Chromium: Elevated reporting limit(s) due to matrix interference.

F77897-37 for Chromium: Elevated reporting limit(s) due to matrix interference.

F77897-37 for Selenium: Elevated reporting limit(s) due to matrix interference.

F77897-30 for Lead: Elevated reporting limit(s) due to matrix interference.

F77897-36 for Selenium: Elevated reporting limit(s) due to matrix interference.

F77897-38 for Selenium: Elevated reporting limit(s) due to matrix interference.

F77897-30 for Selenium: Elevated reporting limit(s) due to matrix interference.

F77897-33 for Selenium: Elevated reporting limit(s) due to matrix interference.

F77897-33 for Chromium: Elevated reporting limit(s) due to matrix interference.

F77897-31 for Chromium: Elevated reporting limit(s) due to matrix interference.

F77897-31 for Selenium: Elevated reporting limit(s) due to matrix interference.

Metals by Method SW846 7470A

Matrix: AQ **Batch ID:** MP19449

All samples were digested within the recommended method holding time.

All samples were analyzed within the recommended method holding time.

All method blanks for this batch meet method specific criteria.

Samples F77900-1DUP, F77900-1MS, F77900-1MSD, F77900-1SDL were used as the QC samples for metals.

Metals by Method SW846 7471B

Matrix: SO **Batch ID:** MP19459

All samples were digested within the recommended method holding time.

All samples were analyzed within the recommended method holding time.

All method blanks for this batch meet method specific criteria.

Samples F77897-1DUP, F77897-1MS, F77897-1MSD, F77897-1SDL were used as the QC samples for metals.

Metals by Method SW846 7471B

Matrix: SO **Batch ID:** MP19469

All samples were digested within the recommended method holding time.

All samples were analyzed within the recommended method holding time.

All method blanks for this batch meet method specific criteria.

Samples F77964-10MS, F77964-10MSD, F77964-10SDL, F77964-10DUP were used as the QC samples for metals.

RPD for Duplicate for Mercury is outside control limits for sample MP19469-D1. RPD acceptable due to low duplicate and sample concentrations.

RPD for Serial Dilution for Mercury is outside control limits for sample MP19469-SD1. Percent difference acceptable due to low initial sample concentration (< 50 times IDL).

Matrix: SO **Batch ID:** MP19470

All samples were digested within the recommended method holding time.

All samples were analyzed within the recommended method holding time.

All method blanks for this batch meet method specific criteria.

Samples F77897-24DUP, F77897-24MS, F77897-24MSD, F77897-24SDL were used as the QC samples for metals.

Matrix: SO **Batch ID:** MP19500

All samples were digested within the recommended method holding time.

All samples were analyzed within the recommended method holding time.

All method blanks for this batch meet method specific criteria.

Samples F77969-2DUP, F77969-2MS, F77969-2MSD, F77969-2SDL were used as the QC samples for metals.

RPD for Serial Dilution for Mercury is outside control limits for sample MP19500-SD1. Percent difference acceptable due to low initial sample concentration (< 50 times IDL).

Wet Chemistry by Method SM19 2540G

Matrix: SO **Batch ID:** GN42120

Sample F77774-4DUP was used as the QC sample for Solids, Percent.

Matrix: SO **Batch ID:** GN42121

Sample F77897-9DUP was used as the QC sample for Solids, Percent.

Matrix: SO **Batch ID:** GN42122

Sample F77897-29DUP was used as the QC sample for Solids, Percent.

Wet Chemistry by Method SW846 1010

Matrix: SO **Batch ID:** GN42138

Sample F77790-1DUP was used as the QC sample for Ignitability (Flashpoint).

F77897-42 for Ignitability (Flashpoint): Not ignitable

Accutest Laboratories Southeast (ALSE) certifies that this report meets the project requirements for analytical data produced for the samples as received at ALSE and as stated on the COC. ALSE certifies that the data meets the Data Quality Objectives for precision, accuracy and completeness as specified in the ALSE Quality Manual except as noted above. This report is to be used in its entirety. ALSE is not responsible for any assumptions of data quality if partial data packages are used.

Narrative prepared by:

_____ Date: December 1, 2010

Ellen Pampel, Inorganic QA (signature on file)

Wednesday, December 01, 2010

Southeast ACCUTEST LABORATORIES

Sample Results

Report of Analysis

Report of Analysis

Client Sample ID:	SS39-DPT-05A		
Lab Sample ID:	F77897-1	**Date Sampled:**	11/06/10
Matrix:	SO - Soil	**Date Received:**	11/09/10
Method:	SW846 8015C SW846 3550C	**Percent Solids:**	96.6
Project:	Holloman AFB; Alamogordo, NM		

	File ID	DF	Analyzed	By	Prep Date	Prep Batch	Analytical Batch
Run #1	YY18641.D	1	11/16/10	MV	11/10/10	OP34995	GYY675
Run #2							

	Initial Weight	Final Volume
Run #1	29.8 g	1.0 ml
Run #2		

CAS No.	Compound	Result	RL	MDL	Units	Q
	TPH (C10-C28)	ND	8.7	3.5	mg/kg	

CAS No.	Surrogate Recoveries	Run# 1	Run# 2	Limits
84-15-1	o-Terphenyl	76%		49-108%

ND = Not detected MDL - Method Detection Limit
RL = Reporting Limit
E = Indicates value exceeds calibration range

J = Indicates an estimated value
B = Indicates analyte found in associated method blank
N = Indicates presumptive evidence of a compound

Report of Analysis

Client Sample ID:	SS39-DPT-05A		
Lab Sample ID:	F77897-1	**Date Sampled:**	11/06/10
Matrix:	SO - Soil	**Date Received:**	11/09/10
		Percent Solids:	96.6
Project:	Holloman AFB; Alamogordo, NM		

Metals Analysis

Analyte	Result	RL	MDL	Units	DF	Prep	Analyzed	By	Method	Prep Method
Arsenic	0.37 B	0.45	0.091	mg/kg	1	11/15/10	11/15/10	RS	SW846 6010C [2]	SW846 3050B [5]
Barium	24.6	9.1	0.45	mg/kg	1	11/15/10	11/15/10	RS	SW846 6010C [2]	SW846 3050B [5]
Cadmium	0.15 B	0.18	0.045	mg/kg	1	11/15/10	11/15/10	RS	SW846 6010C [2]	SW846 3050B [5]
Chromium [a]	1.3 B	9.1	0.91	mg/kg	20	11/15/10	11/16/10	RS	SW846 6010C [3]	SW846 3050B [5]
Lead [a]	0.22 B	3.6	0.18	mg/kg	4	11/15/10	11/16/10	RS	SW846 6010C [3]	SW846 3050B [5]
Mercury	0.0086 U	0.086	0.0086	mg/kg	1	11/11/10	11/11/10	LM	SW846 7471B [1]	SW846 7471B [4]
Selenium [a]	3.6 U	18	3.6	mg/kg	20	11/15/10	11/16/10	RS	SW846 6010C [3]	SW846 3050B [5]
Silver	0.045 U	0.45	0.045	mg/kg	1	11/15/10	11/15/10	RS	SW846 6010C [2]	SW846 3050B [5]

(1) Instrument QC Batch: MA8503
(2) Instrument QC Batch: MA8510
(3) Instrument QC Batch: MA8512
(4) Prep QC Batch: MP19459
(5) Prep QC Batch: MP19483

(a) Elevated reporting limit(s) due to matrix interference.

RL = Reporting Limit
MDL = Method Detection Limit

U = Indicates a result < MDL
B = Indicates a result > = MDL but < RL

Report of Analysis

Client Sample ID:	SS39-DPT-05B		
Lab Sample ID:	F77897-2	**Date Sampled:**	11/06/10
Matrix:	SO - Soil	**Date Received:**	11/09/10
Method:	SW846 8015C SW846 3550C	**Percent Solids:**	93.0
Project:	Holloman AFB; Alamogordo, NM		

	File ID	DF	Analyzed	By	Prep Date	Prep Batch	Analytical Batch
Run #1	YY18638.D	1	11/16/10	MV	11/10/10	OP34995	GYY675
Run #2							

	Initial Weight	Final Volume
Run #1	30.1 g	1.0 ml
Run #2		

CAS No.	Compound	Result	RL	MDL	Units	Q
	TPH (C10-C28)	ND	8.9	3.6	mg/kg	

CAS No.	Surrogate Recoveries	Run# 1	Run# 2	Limits
84-15-1	o-Terphenyl	75%		49-108%

ND = Not detected MDL - Method Detection Limit
RL = Reporting Limit
E = Indicates value exceeds calibration range

J = Indicates an estimated value
B = Indicates analyte found in associated method blank
N = Indicates presumptive evidence of a compound

Report of Analysis

Client Sample ID:	SS39-DPT-05B		
Lab Sample ID:	F77897-2	**Date Sampled:**	11/06/10
Matrix:	SO - Soil	**Date Received:**	11/09/10
		Percent Solids:	93.0
Project:	Holloman AFB; Alamogordo, NM		

Metals Analysis

Analyte	Result	RL	MDL	Units	DF	Prep	Analyzed	By	Method	Prep Method
Arsenic	1.2	0.52	0.10	mg/kg	1	11/15/10	11/15/10	RS	SW846 6010C [2]	SW846 3050B [5]
Barium	55.3	10	0.52	mg/kg	1	11/15/10	11/15/10	RS	SW846 6010C [2]	SW846 3050B [5]
Cadmium	0.88	0.21	0.052	mg/kg	1	11/15/10	11/15/10	RS	SW846 6010C [2]	SW846 3050B [5]
Chromium [a]	7.3	5.2	0.52	mg/kg	10	11/15/10	11/16/10	RS	SW846 6010C [3]	SW846 3050B [5]
Lead [a]	2.2 B	4.2	0.21	mg/kg	4	11/15/10	11/16/10	RS	SW846 6010C [3]	SW846 3050B [5]
Mercury	0.0088 U	0.088	0.0088	mg/kg	1	11/11/10	11/11/10	LM	SW846 7471B [1]	SW846 7471B [4]
Selenium [a]	2.1 U	10	2.1	mg/kg	10	11/15/10	11/16/10	RS	SW846 6010C [3]	SW846 3050B [5]
Silver	0.052 U	0.52	0.052	mg/kg	1	11/15/10	11/15/10	RS	SW846 6010C [2]	SW846 3050B [5]

(1) Instrument QC Batch: MA8503
(2) Instrument QC Batch: MA8510
(3) Instrument QC Batch: MA8512
(4) Prep QC Batch: MP19459
(5) Prep QC Batch: MP19483

(a) Elevated reporting limit(s) due to matrix interference.

RL = Reporting Limit
MDL = Method Detection Limit

U = Indicates a result < MDL
B = Indicates a result > = MDL but < RL

Report of Analysis

Client Sample ID:	SS39-DPT-05C		
Lab Sample ID:	F77897-3	**Date Sampled:**	11/06/10
Matrix:	SO - Soil	**Date Received:**	11/09/10
Method:	SW846 8015C SW846 3550C	**Percent Solids:**	87.2
Project:	Holloman AFB; Alamogordo, NM		

	File ID	DF	Analyzed	By	Prep Date	Prep Batch	Analytical Batch
Run #1	YY18644.D	1	11/16/10	MV	11/10/10	OP34995	GYY675
Run #2							

	Initial Weight	Final Volume
Run #1	29.7 g	1.0 ml
Run #2		

CAS No.	Compound	Result	RL	MDL	Units	Q
	TPH (C10-C28)	ND	9.7	3.9	mg/kg	

CAS No.	Surrogate Recoveries	Run# 1	Run# 2	Limits
84-15-1	o-Terphenyl	77%		49-108%

ND = Not detected MDL - Method Detection Limit
RL = Reporting Limit
E = Indicates value exceeds calibration range

J = Indicates an estimated value
B = Indicates analyte found in associated method blank
N = Indicates presumptive evidence of a compound

Report of Analysis

Client Sample ID:	SS39-DPT-05C		
Lab Sample ID:	F77897-3	**Date Sampled:**	11/06/10
Matrix:	SO - Soil	**Date Received:**	11/09/10
		Percent Solids:	87.2
Project:	Holloman AFB; Alamogordo, NM		

Metals Analysis

Analyte	Result	RL	MDL	Units	DF	Prep	Analyzed	By	Method	Prep Method
Arsenic	1.5	0.45	0.090	mg/kg	1	11/15/10	11/15/10	RS	SW846 6010C [2]	SW846 3050B [5]
Barium	55.6	9.0	0.45	mg/kg	1	11/15/10	11/15/10	RS	SW846 6010C [2]	SW846 3050B [5]
Cadmium	1.0	0.18	0.045	mg/kg	1	11/15/10	11/15/10	RS	SW846 6010C [2]	SW846 3050B [5]
Chromium [a]	11.1	4.5	0.45	mg/kg	10	11/15/10	11/16/10	RS	SW846 6010C [3]	SW846 3050B [5]
Lead [a]	3.1 B	3.6	0.18	mg/kg	4	11/15/10	11/16/10	RS	SW846 6010C [3]	SW846 3050B [5]
Mercury	0.0092 U	0.092	0.0092	mg/kg	1	11/11/10	11/11/10	LM	SW846 7471B [1]	SW846 7471B [4]
Selenium [a]	1.8 U	9.0	1.8	mg/kg	10	11/15/10	11/16/10	RS	SW846 6010C [3]	SW846 3050B [5]
Silver	0.045 U	0.45	0.045	mg/kg	1	11/15/10	11/15/10	RS	SW846 6010C [2]	SW846 3050B [5]

(1) Instrument QC Batch: MA8503
(2) Instrument QC Batch: MA8510
(3) Instrument QC Batch: MA8512
(4) Prep QC Batch: MP19459
(5) Prep QC Batch: MP19483

(a) Elevated reporting limit(s) due to matrix interference.

RL = Reporting Limit
MDL = Method Detection Limit

U = Indicates a result < MDL
B = Indicates a result > = MDL but < RL

Report of Analysis

Client Sample ID:	SS39-DPT-06A		
Lab Sample ID:	F77897-4	**Date Sampled:**	11/06/10
Matrix:	SO - Soil	**Date Received:**	11/09/10
Method:	SW846 8015C SW846 3550C	**Percent Solids:**	96.8
Project:	Holloman AFB; Alamogordo, NM		

	File ID	DF	Analyzed	By	Prep Date	Prep Batch	Analytical Batch
Run #1	YY18645.D	1	11/16/10	MV	11/10/10	OP34995	GYY675
Run #2							

	Initial Weight	Final Volume
Run #1	30.0 g	1.0 ml
Run #2		

CAS No.	Compound	Result	RL	MDL	Units	Q
	TPH (C10-C28)	ND	8.6	3.4	mg/kg	

CAS No.	Surrogate Recoveries	Run# 1	Run# 2	Limits
84-15-1	o-Terphenyl	74%		49-108%

ND = Not detected MDL - Method Detection Limit
RL = Reporting Limit
E = Indicates value exceeds calibration range

J = Indicates an estimated value
B = Indicates analyte found in associated method blank
N = Indicates presumptive evidence of a compound

Report of Analysis

Client Sample ID:	SS39-DPT-06A		
Lab Sample ID:	F77897-4	**Date Sampled:**	11/06/10
Matrix:	SO - Soil	**Date Received:**	11/09/10
		Percent Solids:	96.8
Project:	Holloman AFB; Alamogordo, NM		

Metals Analysis

Analyte	Result	RL	MDL	Units	DF	Prep	Analyzed	By	Method	Prep Method
Arsenic	0.42 B	0.46	0.092	mg/kg	1	11/15/10	11/16/10	RS	SW846 6010C [2]	SW846 3050B [5]
Barium	22.8	9.2	0.46	mg/kg	1	11/15/10	11/16/10	RS	SW846 6010C [2]	SW846 3050B [5]
Cadmium	0.18	0.18	0.046	mg/kg	1	11/15/10	11/16/10	RS	SW846 6010C [2]	SW846 3050B [5]
Chromium [a]	1.4 B	4.6	0.46	mg/kg	10	11/15/10	11/16/10	RS	SW846 6010C [3]	SW846 3050B [5]
Lead [a]	0.18 U	3.7	0.18	mg/kg	4	11/15/10	11/16/10	RS	SW846 6010C [3]	SW846 3050B [5]
Mercury	0.0086 U	0.086	0.0086	mg/kg	1	11/11/10	11/11/10	LM	SW846 7471B [1]	SW846 7471B [4]
Selenium [a]	1.8 U	9.2	1.8	mg/kg	10	11/15/10	11/16/10	RS	SW846 6010C [3]	SW846 3050B [5]
Silver	0.046 U	0.46	0.046	mg/kg	1	11/15/10	11/16/10	RS	SW846 6010C [2]	SW846 3050B [5]

(1) Instrument QC Batch: MA8503
(2) Instrument QC Batch: MA8510
(3) Instrument QC Batch: MA8512
(4) Prep QC Batch: MP19459
(5) Prep QC Batch: MP19483

(a) Elevated reporting limit(s) due to matrix interference.

RL = Reporting Limit
MDL = Method Detection Limit

U = Indicates a result < MDL
B = Indicates a result > = MDL but < RL

Report of Analysis

Client Sample ID:	SS39-DPT-06B		
Lab Sample ID:	F77897-5	**Date Sampled:**	11/06/10
Matrix:	SO - Soil	**Date Received:**	11/09/10
Method:	SW846 8015C SW846 3550C	**Percent Solids:**	89.2
Project:	Holloman AFB; Alamogordo, NM		

	File ID	DF	Analyzed	By	Prep Date	Prep Batch	Analytical Batch
Run #1	YY18646.D	1	11/16/10	MV	11/10/10	OP34995	GYY675
Run #2							

	Initial Weight	Final Volume
Run #1	30.2 g	1.0 ml
Run #2		

CAS No.	Compound	Result	RL	MDL	Units	Q
	TPH (C10-C28)	ND	9.3	3.7	mg/kg	

CAS No.	Surrogate Recoveries	Run# 1	Run# 2	Limits
84-15-1	o-Terphenyl	75%		49-108%

ND = Not detected MDL - Method Detection Limit
RL = Reporting Limit
E = Indicates value exceeds calibration range

J = Indicates an estimated value
B = Indicates analyte found in associated method blank
N = Indicates presumptive evidence of a compound

Report of Analysis

Client Sample ID:	SS39-DPT-06B		
Lab Sample ID:	F77897-5	**Date Sampled:**	11/06/10
Matrix:	SO - Soil	**Date Received:**	11/09/10
		Percent Solids:	89.2
Project:	Holloman AFB; Alamogordo, NM		

Metals Analysis

Analyte	Result	RL	MDL	Units	DF	Prep	Analyzed	By	Method	Prep Method
Arsenic	0.72	0.46	0.092	mg/kg	1	11/15/10	11/16/10	RS	SW846 6010C [2]	SW846 3050B [5]
Barium	49.2	9.2	0.46	mg/kg	1	11/15/10	11/16/10	RS	SW846 6010C [2]	SW846 3050B [5]
Cadmium	0.91	0.18	0.046	mg/kg	1	11/15/10	11/16/10	RS	SW846 6010C [2]	SW846 3050B [5]
Chromium [a]	8.3	4.6	0.46	mg/kg	10	11/15/10	11/16/10	RS	SW846 6010C [3]	SW846 3050B [5]
Lead [a]	2.2 B	3.7	0.18	mg/kg	4	11/15/10	11/16/10	RS	SW846 6010C [3]	SW846 3050B [5]
Mercury	0.0089 U	0.089	0.0089	mg/kg	1	11/11/10	11/11/10	LM	SW846 7471B [1]	SW846 7471B [4]
Selenium [a]	1.8 U	9.2	1.8	mg/kg	10	11/15/10	11/16/10	RS	SW846 6010C [3]	SW846 3050B [5]
Silver	0.046 U	0.46	0.046	mg/kg	1	11/15/10	11/16/10	RS	SW846 6010C [2]	SW846 3050B [5]

(1) Instrument QC Batch: MA8503
(2) Instrument QC Batch: MA8510
(3) Instrument QC Batch: MA8512
(4) Prep QC Batch: MP19459
(5) Prep QC Batch: MP19483

(a) Elevated reporting limit(s) due to matrix interference.

RL = Reporting Limit
MDL = Method Detection Limit

U = Indicates a result < MDL
B = Indicates a result > = MDL but < RL

Report of Analysis

Client Sample ID:	SS39-DPT-06C		
Lab Sample ID:	F77897-6	**Date Sampled:**	11/06/10
Matrix:	SO - Soil	**Date Received:**	11/09/10
Method:	SW846 8015C SW846 3550C	**Percent Solids:**	88.7
Project:	Holloman AFB; Alamogordo, NM		

	File ID	DF	Analyzed	By	Prep Date	Prep Batch	Analytical Batch
Run #1	YY18647.D	1	11/16/10	MV	11/10/10	OP34995	GYY675
Run #2							

	Initial Weight	Final Volume
Run #1	29.6 g	1.0 ml
Run #2		

CAS No.	Compound	Result	RL	MDL	Units	Q
	TPH (C10-C28)	ND	9.5	3.8	mg/kg	

CAS No.	Surrogate Recoveries	Run# 1	Run# 2	Limits
84-15-1	o-Terphenyl	80%		49-108%

ND = Not detected MDL - Method Detection Limit
RL = Reporting Limit
E = Indicates value exceeds calibration range

J = Indicates an estimated value
B = Indicates analyte found in associated method blank
N = Indicates presumptive evidence of a compound

Report of Analysis

Client Sample ID:	SS39-DPT-06C		
Lab Sample ID:	F77897-6	**Date Sampled:**	11/06/10
Matrix:	SO - Soil	**Date Received:**	11/09/10
		Percent Solids:	88.7
Project:	Holloman AFB; Alamogordo, NM		

Metals Analysis

Analyte	Result	RL	MDL	Units	DF	Prep	Analyzed	By	Method	Prep Method
Arsenic	1.0	0.45	0.091	mg/kg	1	11/15/10	11/16/10	RS	SW846 6010C [2]	SW846 3050B [5]
Barium	35.1	9.1	0.45	mg/kg	1	11/15/10	11/16/10	RS	SW846 6010C [2]	SW846 3050B [5]
Cadmium	0.69	0.18	0.045	mg/kg	1	11/15/10	11/16/10	RS	SW846 6010C [2]	SW846 3050B [5]
Chromium [a]	7.1	4.5	0.45	mg/kg	10	11/15/10	11/16/10	RS	SW846 6010C [3]	SW846 3050B [5]
Lead [a]	2.2 B	3.6	0.18	mg/kg	4	11/15/10	11/16/10	RS	SW846 6010C [3]	SW846 3050B [5]
Mercury	0.0094 U	0.094	0.0094	mg/kg	1	11/11/10	11/11/10	LM	SW846 7471B [1]	SW846 7471B [4]
Selenium [a]	1.8 U	9.1	1.8	mg/kg	10	11/15/10	11/16/10	RS	SW846 6010C [3]	SW846 3050B [5]
Silver	0.045 U	0.45	0.045	mg/kg	1	11/15/10	11/16/10	RS	SW846 6010C [2]	SW846 3050B [5]

(1) Instrument QC Batch: MA8503
(2) Instrument QC Batch: MA8510
(3) Instrument QC Batch: MA8512
(4) Prep QC Batch: MP19459
(5) Prep QC Batch: MP19483

(a) Elevated reporting limit(s) due to matrix interference.

RL = Reporting Limit
MDL = Method Detection Limit

U = Indicates a result < MDL
B = Indicates a result > = MDL but < RL

Report of Analysis

Client Sample ID:	SS39-DPT-07A		
Lab Sample ID:	F77897-7	**Date Sampled:**	11/06/10
Matrix:	SO - Soil	**Date Received:**	11/09/10
Method:	SW846 8015C SW846 3550C	**Percent Solids:**	96.8
Project:	Holloman AFB; Alamogordo, NM		

	File ID	DF	Analyzed	By	Prep Date	Prep Batch	Analytical Batch
Run #1	YY18648.D	1	11/16/10	MV	11/10/10	OP34995	GYY675
Run #2							

	Initial Weight	Final Volume
Run #1	30.1 g	1.0 ml
Run #2		

CAS No.	Compound	Result	RL	MDL	Units	Q
	TPH (C10-C28)	ND	8.6	3.4	mg/kg	

CAS No.	Surrogate Recoveries	Run# 1	Run# 2	Limits
84-15-1	o-Terphenyl	74%		49-108%

ND = Not detected MDL - Method Detection Limit
RL = Reporting Limit
E = Indicates value exceeds calibration range

J = Indicates an estimated value
B = Indicates analyte found in associated method blank
N = Indicates presumptive evidence of a compound

Report of Analysis

Client Sample ID:	SS39-DPT-07A		
Lab Sample ID:	F77897-7	**Date Sampled:**	11/06/10
Matrix:	SO - Soil	**Date Received:**	11/09/10
		Percent Solids:	96.8
Project:	Holloman AFB; Alamogordo, NM		

Metals Analysis

Analyte	Result	RL	MDL	Units	DF	Prep	Analyzed	By	Method	Prep Method
Arsenic	0.39 B	0.47	0.095	mg/kg	1	11/15/10	11/16/10	RS	SW846 6010C [2]	SW846 3050B [5]
Barium	28.1	9.5	0.47	mg/kg	1	11/15/10	11/16/10	RS	SW846 6010C [2]	SW846 3050B [5]
Cadmium	0.23	0.19	0.047	mg/kg	1	11/15/10	11/16/10	RS	SW846 6010C [2]	SW846 3050B [5]
Chromium [a]	2.0 B	4.7	0.47	mg/kg	10	11/15/10	11/16/10	RS	SW846 6010C [3]	SW846 3050B [5]
Lead [a]	0.56 B	3.8	0.19	mg/kg	4	11/15/10	11/16/10	RS	SW846 6010C [3]	SW846 3050B [5]
Mercury	0.0083 U	0.083	0.0083	mg/kg	1	11/11/10	11/11/10	LM	SW846 7471B [1]	SW846 7471B [4]
Selenium [a]	1.9 U	9.5	1.9	mg/kg	10	11/15/10	11/16/10	RS	SW846 6010C [3]	SW846 3050B [5]
Silver	0.047 U	0.47	0.047	mg/kg	1	11/15/10	11/16/10	RS	SW846 6010C [2]	SW846 3050B [5]

(1) Instrument QC Batch: MA8503
(2) Instrument QC Batch: MA8510
(3) Instrument QC Batch: MA8512
(4) Prep QC Batch: MP19459
(5) Prep QC Batch: MP19483

(a) Elevated reporting limit(s) due to matrix interference.

RL = Reporting Limit
MDL = Method Detection Limit

U = Indicates a result < MDL
B = Indicates a result > = MDL but < RL

Report of Analysis

Client Sample ID:	SS39-DPT-07B		
Lab Sample ID:	F77897-8	**Date Sampled:**	11/06/10
Matrix:	SO - Soil	**Date Received:**	11/09/10
Method:	SW846 8015C SW846 3550C	**Percent Solids:**	95.1
Project:	Holloman AFB; Alamogordo, NM		

	File ID	DF	Analyzed	By	Prep Date	Prep Batch	Analytical Batch
Run #1	YY18649.D	1	11/16/10	MV	11/10/10	OP34995	GYY675
Run #2							

	Initial Weight	Final Volume
Run #1	30.2 g	1.0 ml
Run #2		

CAS No.	Compound	Result	RL	MDL	Units	Q
	TPH (C10-C28)	ND	8.7	3.5	mg/kg	

CAS No.	Surrogate Recoveries	Run# 1	Run# 2	Limits
84-15-1	o-Terphenyl	75%		49-108%

ND = Not detected MDL - Method Detection Limit
RL = Reporting Limit
E = Indicates value exceeds calibration range

J = Indicates an estimated value
B = Indicates analyte found in associated method blank
N = Indicates presumptive evidence of a compound

Report of Analysis

Client Sample ID:	SS39-DPT-07B		
Lab Sample ID:	F77897-8	**Date Sampled:**	11/06/10
Matrix:	SO - Soil	**Date Received:**	11/09/10
		Percent Solids:	95.1
Project:	Holloman AFB; Alamogordo, NM		

Metals Analysis

Analyte	Result	RL	MDL	Units	DF	Prep	Analyzed	By	Method	Prep Method
Arsenic	0.15 B	0.50	0.099	mg/kg	1	11/15/10	11/16/10	RS	SW846 6010C [2]	SW846 3050B [5]
Barium	22.4	9.9	0.50	mg/kg	1	11/15/10	11/16/10	RS	SW846 6010C [2]	SW846 3050B [5]
Cadmium	0.23	0.20	0.050	mg/kg	1	11/15/10	11/16/10	RS	SW846 6010C [2]	SW846 3050B [5]
Chromium [a]	2.9 B	5.0	0.50	mg/kg	10	11/15/10	11/16/10	RS	SW846 6010C [3]	SW846 3050B [5]
Lead [a]	0.21 B	4.0	0.20	mg/kg	4	11/15/10	11/16/10	RS	SW846 6010C [3]	SW846 3050B [5]
Mercury	0.0081 U	0.081	0.0081	mg/kg	1	11/11/10	11/11/10	LM	SW846 7471B [1]	SW846 7471B [4]
Selenium [a]	2.0 U	9.9	2.0	mg/kg	10	11/15/10	11/16/10	RS	SW846 6010C [3]	SW846 3050B [5]
Silver	0.050 U	0.50	0.050	mg/kg	1	11/15/10	11/16/10	RS	SW846 6010C [2]	SW846 3050B [5]

(1) Instrument QC Batch: MA8503
(2) Instrument QC Batch: MA8510
(3) Instrument QC Batch: MA8512
(4) Prep QC Batch: MP19459
(5) Prep QC Batch: MP19483

(a) Elevated reporting limit(s) due to matrix interference.

RL = Reporting Limit
MDL = Method Detection Limit

U = Indicates a result < MDL
B = Indicates a result > = MDL but < RL

Report of Analysis

Client Sample ID:	SS39-DPT-07C		
Lab Sample ID:	F77897-9	**Date Sampled:**	11/06/10
Matrix:	SO - Soil	**Date Received:**	11/09/10
Method:	SW846 8015C SW846 3550C	**Percent Solids:**	92.8
Project:	Holloman AFB; Alamogordo, NM		

	File ID	DF	Analyzed	By	Prep Date	Prep Batch	Analytical Batch
Run #1	YY18650.D	1	11/16/10	MV	11/10/10	OP34995	GYY675
Run #2							

	Initial Weight	Final Volume
Run #1	29.9 g	1.0 ml
Run #2		

CAS No.	Compound	Result	RL	MDL	Units	Q
	TPH (C10-C28)	ND	9.0	3.6	mg/kg	

CAS No.	Surrogate Recoveries	Run# 1	Run# 2	Limits
84-15-1	o-Terphenyl	67%		49-108%

ND = Not detected MDL - Method Detection Limit
RL = Reporting Limit
E = Indicates value exceeds calibration range

J = Indicates an estimated value
B = Indicates analyte found in associated method blank
N = Indicates presumptive evidence of a compound

Report of Analysis

Client Sample ID:	SS39-DPT-07C		
Lab Sample ID:	F77897-9	**Date Sampled:**	11/06/10
Matrix:	SO - Soil	**Date Received:**	11/09/10
		Percent Solids:	92.8
Project:	Holloman AFB; Alamogordo, NM		

Metals Analysis

Analyte	Result	RL	MDL	Units	DF	Prep	Analyzed	By	Method	Prep Method
Arsenic	0.34 B	0.44	0.088	mg/kg	1	11/15/10	11/16/10	RS	SW846 6010C [2]	SW846 3050B [6]
Barium	24.9	8.8	0.44	mg/kg	1	11/15/10	11/16/10	RS	SW846 6010C [2]	SW846 3050B [6]
Cadmium	0.30	0.18	0.044	mg/kg	1	11/15/10	11/16/10	RS	SW846 6010C [2]	SW846 3050B [6]
Chromium [a]	3.5 B	4.4	0.44	mg/kg	10	11/15/10	11/16/10	RS	SW846 6010C [3]	SW846 3050B [6]
Lead [a]	0.91 B	3.5	0.18	mg/kg	4	11/15/10	11/17/10	RS	SW846 6010C [4]	SW846 3050B [6]
Mercury	0.0082 U	0.082	0.0082	mg/kg	1	11/11/10	11/11/10	LM	SW846 7471B [1]	SW846 7471B [5]
Selenium [a]	1.8 U	8.8	1.8	mg/kg	10	11/15/10	11/16/10	RS	SW846 6010C [3]	SW846 3050B [6]
Silver	0.044 U	0.44	0.044	mg/kg	1	11/15/10	11/16/10	RS	SW846 6010C [2]	SW846 3050B [6]

(1) Instrument QC Batch: MA8503
(2) Instrument QC Batch: MA8510
(3) Instrument QC Batch: MA8512
(4) Instrument QC Batch: MA8516
(5) Prep QC Batch: MP19459
(6) Prep QC Batch: MP19483

(a) Elevated reporting limit(s) due to matrix interference.

RL = Reporting Limit
MDL = Method Detection Limit

U = Indicates a result < MDL
B = Indicates a result > = MDL but < RL

Report of Analysis

Client Sample ID:	SS39-DPT-08A		
Lab Sample ID:	F77897-10	**Date Sampled:**	11/06/10
Matrix:	SO - Soil	**Date Received:**	11/09/10
Method:	SW846 8015C SW846 3550C	**Percent Solids:**	96.4
Project:	Holloman AFB; Alamogordo, NM		

	File ID	DF	Analyzed	By	Prep Date	Prep Batch	Analytical Batch
Run #1	YY18691.D	1	11/17/10	MV	11/10/10	OP34995	GYY675
Run #2							

	Initial Weight	Final Volume
Run #1	29.8 g	1.0 ml
Run #2		

CAS No.	Compound	Result	RL	MDL	Units	Q
	TPH (C10-C28)	ND	8.7	3.5	mg/kg	

CAS No.	Surrogate Recoveries	Run# 1	Run# 2	Limits
84-15-1	o-Terphenyl	76%		49-108%

ND = Not detected MDL - Method Detection Limit
RL = Reporting Limit
E = Indicates value exceeds calibration range

J = Indicates an estimated value
B = Indicates analyte found in associated method blank
N = Indicates presumptive evidence of a compound

Report of Analysis

Client Sample ID:	SS39-DPT-08A		
Lab Sample ID:	F77897-10	**Date Sampled:**	11/06/10
Matrix:	SO - Soil	**Date Received:**	11/09/10
		Percent Solids:	96.4
Project:	Holloman AFB; Alamogordo, NM		

Metals Analysis

Analyte	Result	RL	MDL	Units	DF	Prep	Analyzed	By	Method	Prep Method
Arsenic	0.49	0.41	0.083	mg/kg	1	11/15/10	11/16/10	RS	SW846 6010C [2]	SW846 3050B [5]
Barium	28.2	8.3	0.41	mg/kg	1	11/15/10	11/16/10	RS	SW846 6010C [2]	SW846 3050B [5]
Cadmium	0.52	0.17	0.041	mg/kg	1	11/15/10	11/16/10	RS	SW846 6010C [2]	SW846 3050B [5]
Chromium [a]	2.4 B	8.3	0.83	mg/kg	20	11/15/10	11/17/10	RS	SW846 6010C [3]	SW846 3050B [5]
Lead [a]	0.66 B	3.3	0.17	mg/kg	4	11/15/10	11/17/10	RS	SW846 6010C [3]	SW846 3050B [5]
Mercury	0.0085 U	0.085	0.0085	mg/kg	1	11/11/10	11/11/10	LM	SW846 7471B [1]	SW846 7471B [4]
Selenium [a]	3.3 U	17	3.3	mg/kg	20	11/15/10	11/17/10	RS	SW846 6010C [3]	SW846 3050B [5]
Silver	0.041 U	0.41	0.041	mg/kg	1	11/15/10	11/16/10	RS	SW846 6010C [2]	SW846 3050B [5]

(1) Instrument QC Batch: MA8503
(2) Instrument QC Batch: MA8510
(3) Instrument QC Batch: MA8516
(4) Prep QC Batch: MP19459
(5) Prep QC Batch: MP19483

(a) Elevated reporting limit(s) due to matrix interference.

RL = Reporting Limit
MDL = Method Detection Limit

U = Indicates a result < MDL
B = Indicates a result > = MDL but < RL

Report of Analysis

Client Sample ID:	SS39-DPT-08B		
Lab Sample ID:	F77897-11	**Date Sampled:**	11/06/10
Matrix:	SO - Soil	**Date Received:**	11/09/10
Method:	SW846 8015C SW846 3550C	**Percent Solids:**	94.7
Project:	Holloman AFB; Alamogordo, NM		

	File ID	DF	Analyzed	By	Prep Date	Prep Batch	Analytical Batch
Run #1	YY18692.D	1	11/17/10	MV	11/10/10	OP34995	GYY675
Run #2							

	Initial Weight	Final Volume
Run #1	29.7 g	1.0 ml
Run #2		

CAS No.	Compound	Result	RL	MDL	Units	Q
	TPH (C10-C28) [a]	13.4	8.9	3.6	mg/kg	

CAS No.	Surrogate Recoveries	Run# 1	Run# 2	Limits
84-15-1	o-Terphenyl	78%		49-108%

(a) Petroleum hydrocarbon pattern extends beyond C28.

ND = Not detected MDL - Method Detection Limit
RL = Reporting Limit
E = Indicates value exceeds calibration range

J = Indicates an estimated value
B = Indicates analyte found in associated method blank
N = Indicates presumptive evidence of a compound

Report of Analysis

Client Sample ID:	SS39-DPT-08B		
Lab Sample ID:	F77897-11	**Date Sampled:**	11/06/10
Matrix:	SO - Soil	**Date Received:**	11/09/10
		Percent Solids:	94.7
Project:	Holloman AFB; Alamogordo, NM		

Metals Analysis

Analyte	Result	RL	MDL	Units	DF	Prep	Analyzed	By	Method	Prep Method
Arsenic	0.41 B	0.45	0.089	mg/kg	1	11/15/10	11/16/10	RS	SW846 6010C [2]	SW846 3050B [6]
Barium	23.1	8.9	0.45	mg/kg	1	11/15/10	11/16/10	RS	SW846 6010C [2]	SW846 3050B [6]
Cadmium	2.0	0.18	0.045	mg/kg	1	11/15/10	11/16/10	RS	SW846 6010C [2]	SW846 3050B [6]
Chromium [a]	6.1	4.5	0.45	mg/kg	10	11/15/10	11/16/10	RS	SW846 6010C [3]	SW846 3050B [6]
Lead [a]	1.2 B	3.6	0.18	mg/kg	4	11/15/10	11/17/10	RS	SW846 6010C [4]	SW846 3050B [6]
Mercury	0.0087 U	0.087	0.0087	mg/kg	1	11/11/10	11/11/10	LM	SW846 7471B [1]	SW846 7471B [5]
Selenium [a]	1.8 U	8.9	1.8	mg/kg	10	11/15/10	11/16/10	RS	SW846 6010C [3]	SW846 3050B [6]
Silver	0.045 U	0.45	0.045	mg/kg	1	11/15/10	11/16/10	RS	SW846 6010C [2]	SW846 3050B [6]

(1) Instrument QC Batch: MA8503
(2) Instrument QC Batch: MA8510
(3) Instrument QC Batch: MA8512
(4) Instrument QC Batch: MA8516
(5) Prep QC Batch: MP19459
(6) Prep QC Batch: MP19483

(a) Elevated reporting limit(s) due to matrix interference.

RL = Reporting Limit
MDL = Method Detection Limit

U = Indicates a result < MDL
B = Indicates a result > = MDL but < RL

Report of Analysis

Client Sample ID:	SS39-DPT-08C		
Lab Sample ID:	F77897-12	**Date Sampled:**	11/06/10
Matrix:	SO - Soil	**Date Received:**	11/09/10
Method:	SW846 8015C SW846 3550C	**Percent Solids:**	89.8
Project:	Holloman AFB; Alamogordo, NM		

	File ID	DF	Analyzed	By	Prep Date	Prep Batch	Analytical Batch
Run #1	YY18693.D	1	11/17/10	MV	11/10/10	OP34995	GYY675
Run #2							

	Initial Weight	Final Volume
Run #1	30.0 g	1.0 ml
Run #2		

CAS No.	Compound	Result	RL	MDL	Units	Q
	TPH (C10-C28)	ND	9.3	3.7	mg/kg	

CAS No.	Surrogate Recoveries	Run# 1	Run# 2	Limits
84-15-1	o-Terphenyl	77%		49-108%

ND = Not detected MDL - Method Detection Limit
RL = Reporting Limit
E = Indicates value exceeds calibration range

J = Indicates an estimated value
B = Indicates analyte found in associated method blank
N = Indicates presumptive evidence of a compound

Report of Analysis

Client Sample ID:	SS39-DPT-08C		
Lab Sample ID:	F77897-12	**Date Sampled:**	11/06/10
Matrix:	SO - Soil	**Date Received:**	11/09/10
		Percent Solids:	89.8
Project:	Holloman AFB; Alamogordo, NM		

Metals Analysis

Analyte	Result	RL	MDL	Units	DF	Prep	Analyzed	By	Method	Prep Method
Arsenic	1.1	0.37	0.075	mg/kg	1	11/15/10	11/16/10	RS	SW846 6010C [2]	SW846 3050B [6]
Barium	42.7	7.5	0.37	mg/kg	1	11/15/10	11/16/10	RS	SW846 6010C [2]	SW846 3050B [6]
Cadmium	0.96	0.15	0.037	mg/kg	1	11/15/10	11/16/10	RS	SW846 6010C [2]	SW846 3050B [6]
Chromium [a]	9.4	3.7	0.37	mg/kg	10	11/15/10	11/16/10	RS	SW846 6010C [3]	SW846 3050B [6]
Lead [a]	3.2	3.0	0.15	mg/kg	4	11/15/10	11/17/10	RS	SW846 6010C [4]	SW846 3050B [6]
Mercury	0.0088 U	0.088	0.0088	mg/kg	1	11/11/10	11/11/10	LM	SW846 7471B [1]	SW846 7471B [5]
Selenium [a]	34.3	7.5	1.5	mg/kg	10	11/15/10	11/16/10	RS	SW846 6010C [3]	SW846 3050B [6]
Silver	0.037 U	0.37	0.037	mg/kg	1	11/15/10	11/16/10	RS	SW846 6010C [2]	SW846 3050B [6]

(1) Instrument QC Batch: MA8503
(2) Instrument QC Batch: MA8510
(3) Instrument QC Batch: MA8512
(4) Instrument QC Batch: MA8516
(5) Prep QC Batch: MP19459
(6) Prep QC Batch: MP19483

(a) Elevated reporting limit(s) due to matrix interference.

RL = Reporting Limit
MDL = Method Detection Limit

U = Indicates a result < MDL
B = Indicates a result > = MDL but < RL

Report of Analysis

Client Sample ID:	SS39-DPT-09A		
Lab Sample ID:	F77897-13	**Date Sampled:**	11/06/10
Matrix:	SO - Soil	**Date Received:**	11/09/10
Method:	SW846 8015C SW846 3550C	**Percent Solids:**	95.6
Project:	Holloman AFB; Alamogordo, NM		

	File ID	DF	Analyzed	By	Prep Date	Prep Batch	Analytical Batch
Run #1	YY18694.D	1	11/17/10	MV	11/10/10	OP34995	GYY675
Run #2							

	Initial Weight	Final Volume
Run #1	30.4 g	1.0 ml
Run #2		

CAS No.	Compound	Result	RL	MDL	Units	Q
	TPH (C10-C28)	ND	8.6	3.4	mg/kg	

CAS No.	Surrogate Recoveries	Run# 1	Run# 2	Limits
84-15-1	o-Terphenyl	76%		49-108%

ND = Not detected MDL - Method Detection Limit
RL = Reporting Limit
E = Indicates value exceeds calibration range

J = Indicates an estimated value
B = Indicates analyte found in associated method blank
N = Indicates presumptive evidence of a compound

Report of Analysis

Client Sample ID:	SS39-DPT-09A		
Lab Sample ID:	F77897-13	**Date Sampled:**	11/06/10
Matrix:	SO - Soil	**Date Received:**	11/09/10
		Percent Solids:	95.6
Project:	Holloman AFB; Alamogordo, NM		

Metals Analysis

Analyte	Result	RL	MDL	Units	DF	Prep	Analyzed	By	Method	Prep Method
Arsenic	0.40 B	0.44	0.089	mg/kg	1	11/15/10	11/16/10	RS	SW846 6010C [2]	SW846 3050B [5]
Barium	24.6	8.9	0.44	mg/kg	1	11/15/10	11/16/10	RS	SW846 6010C [2]	SW846 3050B [5]
Cadmium	0.15 B	0.18	0.044	mg/kg	1	11/15/10	11/16/10	RS	SW846 6010C [2]	SW846 3050B [5]
Chromium [a]	1.8 B	8.9	0.89	mg/kg	20	11/15/10	11/17/10	RS	SW846 6010C [3]	SW846 3050B [5]
Lead [a]	0.33 B	3.5	0.18	mg/kg	4	11/15/10	11/17/10	RS	SW846 6010C [3]	SW846 3050B [5]
Mercury	0.0082 U	0.082	0.0082	mg/kg	1	11/11/10	11/11/10	LM	SW846 7471B [1]	SW846 7471B [4]
Selenium [a]	3.5 U	18	3.5	mg/kg	20	11/15/10	11/17/10	RS	SW846 6010C [3]	SW846 3050B [5]
Silver	0.044 U	0.44	0.044	mg/kg	1	11/15/10	11/16/10	RS	SW846 6010C [2]	SW846 3050B [5]

(1) Instrument QC Batch: MA8503
(2) Instrument QC Batch: MA8510
(3) Instrument QC Batch: MA8516
(4) Prep QC Batch: MP19459
(5) Prep QC Batch: MP19483

(a) Elevated reporting limit(s) due to matrix interference.

RL = Reporting Limit
MDL = Method Detection Limit

U = Indicates a result < MDL
B = Indicates a result > = MDL but < RL

Report of Analysis

Client Sample ID:	SS39-DPT-09B		
Lab Sample ID:	F77897-14	**Date Sampled:**	11/06/10
Matrix:	SO - Soil	**Date Received:**	11/09/10
Method:	SW846 8015C SW846 3550C	**Percent Solids:**	90.0
Project:	Holloman AFB; Alamogordo, NM		

	File ID	DF	Analyzed	By	Prep Date	Prep Batch	Analytical Batch
Run #1	ZF37625.D	1	11/17/10	FEA	11/10/10	OP34997	GZF1576
Run #2							

	Initial Weight	Final Volume
Run #1	29.6 g	1.0 ml
Run #2		

CAS No.	Compound	Result	RL	MDL	Units	Q
	TPH (C10-C28)	ND	9.4	3.8	mg/kg	

CAS No.	Surrogate Recoveries	Run# 1	Run# 2	Limits
84-15-1	o-Terphenyl	86%		49-108%

ND = Not detected MDL - Method Detection Limit
RL = Reporting Limit
E = Indicates value exceeds calibration range

J = Indicates an estimated value
B = Indicates analyte found in associated method blank
N = Indicates presumptive evidence of a compound

Report of Analysis

Client Sample ID:	SS39-DPT-09B		
Lab Sample ID:	F77897-14	**Date Sampled:**	11/06/10
Matrix:	SO - Soil	**Date Received:**	11/09/10
		Percent Solids:	90.0
Project:	Holloman AFB; Alamogordo, NM		

Metals Analysis

Analyte	Result	RL	MDL	Units	DF	Prep	Analyzed	By	Method	Prep Method
Arsenic	0.76	0.43	0.086	mg/kg	1	11/15/10	11/16/10	RS	SW846 6010C [2]	SW846 3050B [6]
Barium	33.8	8.6	0.43	mg/kg	1	11/15/10	11/16/10	RS	SW846 6010C [2]	SW846 3050B [6]
Cadmium	0.32	0.17	0.043	mg/kg	1	11/15/10	11/16/10	RS	SW846 6010C [2]	SW846 3050B [6]
Chromium [a]	2.9 B	4.3	0.43	mg/kg	10	11/15/10	11/16/10	RS	SW846 6010C [3]	SW846 3050B [6]
Lead [a]	0.66 B	3.4	0.17	mg/kg	4	11/15/10	11/17/10	RS	SW846 6010C [4]	SW846 3050B [6]
Mercury	0.0085 U	0.085	0.0085	mg/kg	1	11/11/10	11/11/10	LM	SW846 7471B [1]	SW846 7471B [5]
Selenium [a]	1.7 U	8.6	1.7	mg/kg	10	11/15/10	11/16/10	RS	SW846 6010C [3]	SW846 3050B [6]
Silver	0.043 U	0.43	0.043	mg/kg	1	11/15/10	11/16/10	RS	SW846 6010C [2]	SW846 3050B [6]

(1) Instrument QC Batch: MA8503
(2) Instrument QC Batch: MA8510
(3) Instrument QC Batch: MA8512
(4) Instrument QC Batch: MA8516
(5) Prep QC Batch: MP19459
(6) Prep QC Batch: MP19483

(a) Elevated reporting limit(s) due to matrix interference.

RL = Reporting Limit
MDL = Method Detection Limit

U = Indicates a result < MDL
B = Indicates a result > = MDL but < RL

Report of Analysis

Client Sample ID:	SS39-DPT-09C		
Lab Sample ID:	F77897-15	**Date Sampled:**	11/06/10
Matrix:	SO - Soil	**Date Received:**	11/09/10
Method:	SW846 8015C SW846 3550C	**Percent Solids:**	93.3
Project:	Holloman AFB; Alamogordo, NM		

	File ID	DF	Analyzed	By	Prep Date	Prep Batch	Analytical Batch
Run #1	ZF37626.D	1	11/17/10	FEA	11/10/10	OP34997	GZF1576
Run #2							

	Initial Weight	Final Volume
Run #1	30.1 g	1.0 ml
Run #2		

CAS No.	Compound	Result	RL	MDL	Units	Q
	TPH (C10-C28)	ND	8.9	3.6	mg/kg	

CAS No.	Surrogate Recoveries	Run# 1	Run# 2	Limits
84-15-1	o-Terphenyl	87%		49-108%

ND = Not detected MDL - Method Detection Limit
RL = Reporting Limit
E = Indicates value exceeds calibration range

J = Indicates an estimated value
B = Indicates analyte found in associated method blank
N = Indicates presumptive evidence of a compound

Report of Analysis

Client Sample ID:	SS39-DPT-09C		
Lab Sample ID:	F77897-15	**Date Sampled:**	11/06/10
Matrix:	SO - Soil	**Date Received:**	11/09/10
		Percent Solids:	93.3
Project:	Holloman AFB; Alamogordo, NM		

Metals Analysis

Analyte	Result	RL	MDL	Units	DF	Prep	Analyzed	By	Method	Prep Method
Arsenic	0.59	0.37	0.074	mg/kg	1	11/15/10	11/16/10	RS	SW846 6010C [2]	SW846 3050B [6]
Barium	23.5	7.4	0.37	mg/kg	1	11/15/10	11/16/10	RS	SW846 6010C [2]	SW846 3050B [6]
Cadmium	0.38	0.15	0.037	mg/kg	1	11/15/10	11/16/10	RS	SW846 6010C [2]	SW846 3050B [6]
Chromium [a]	3.3 B	3.7	0.37	mg/kg	10	11/15/10	11/16/10	RS	SW846 6010C [3]	SW846 3050B [6]
Lead [a]	1.0 B	3.0	0.15	mg/kg	4	11/15/10	11/17/10	RS	SW846 6010C [4]	SW846 3050B [6]
Mercury	0.0089 U	0.089	0.0089	mg/kg	1	11/11/10	11/11/10	LM	SW846 7471B [1]	SW846 7471B [5]
Selenium [a]	1.5 U	7.4	1.5	mg/kg	10	11/15/10	11/16/10	RS	SW846 6010C [3]	SW846 3050B [6]
Silver	0.037 U	0.37	0.037	mg/kg	1	11/15/10	11/16/10	RS	SW846 6010C [2]	SW846 3050B [6]

(1) Instrument QC Batch: MA8503
(2) Instrument QC Batch: MA8510
(3) Instrument QC Batch: MA8512
(4) Instrument QC Batch: MA8516
(5) Prep QC Batch: MP19459
(6) Prep QC Batch: MP19483

(a) Elevated reporting limit(s) due to matrix interference.

RL = Reporting Limit
MDL = Method Detection Limit

U = Indicates a result < MDL
B = Indicates a result > = MDL but < RL

Report of Analysis

Client Sample ID:	SS39-DPT-10A		
Lab Sample ID:	F77897-16	**Date Sampled:**	11/06/10
Matrix:	SO - Soil	**Date Received:**	11/09/10
Method:	SW846 8015C SW846 3550C	**Percent Solids:**	97.1
Project:	Holloman AFB; Alamogordo, NM		

	File ID	DF	Analyzed	By	Prep Date	Prep Batch	Analytical Batch
Run #1	ZF37627.D	1	11/17/10	FEA	11/10/10	OP34997	GZF1576
Run #2							

	Initial Weight	Final Volume
Run #1	29.8 g	1.0 ml
Run #2		

CAS No.	Compound	Result	RL	MDL	Units	Q
	TPH (C10-C28)	ND	8.6	3.5	mg/kg	

CAS No.	Surrogate Recoveries	Run# 1	Run# 2	Limits
84-15-1	o-Terphenyl	88%		49-108%

ND = Not detected MDL - Method Detection Limit
RL = Reporting Limit
E = Indicates value exceeds calibration range

J = Indicates an estimated value
B = Indicates analyte found in associated method blank
N = Indicates presumptive evidence of a compound

Report of Analysis

Client Sample ID:	SS39-DPT-10A		
Lab Sample ID:	F77897-16	**Date Sampled:**	11/06/10
Matrix:	SO - Soil	**Date Received:**	11/09/10
		Percent Solids:	97.1
Project:	Holloman AFB; Alamogordo, NM		

Metals Analysis

Analyte	Result	RL	MDL	Units	DF	Prep	Analyzed	By	Method	Prep Method
Arsenic	0.36	0.36	0.072	mg/kg	1	11/15/10	11/16/10	RS	SW846 6010C [2]	SW846 3050B [5]
Barium	26.5	7.2	0.36	mg/kg	1	11/15/10	11/16/10	RS	SW846 6010C [2]	SW846 3050B [5]
Cadmium	0.41	0.14	0.036	mg/kg	1	11/15/10	11/16/10	RS	SW846 6010C [2]	SW846 3050B [5]
Chromium [a]	1.6 B	7.2	0.72	mg/kg	20	11/15/10	11/17/10	RS	SW846 6010C [3]	SW846 3050B [5]
Lead [a]	0.54 B	2.9	0.14	mg/kg	4	11/15/10	11/17/10	RS	SW846 6010C [3]	SW846 3050B [5]
Mercury	0.0083 U	0.083	0.0083	mg/kg	1	11/11/10	11/11/10	LM	SW846 7471B [1]	SW846 7471B [4]
Selenium [a]	2.9 U	14	2.9	mg/kg	20	11/15/10	11/17/10	RS	SW846 6010C [3]	SW846 3050B [5]
Silver	0.036 U	0.36	0.036	mg/kg	1	11/15/10	11/16/10	RS	SW846 6010C [2]	SW846 3050B [5]

(1) Instrument QC Batch: MA8503
(2) Instrument QC Batch: MA8510
(3) Instrument QC Batch: MA8516
(4) Prep QC Batch: MP19459
(5) Prep QC Batch: MP19483

(a) Elevated reporting limit(s) due to matrix interference.

RL = Reporting Limit
MDL = Method Detection Limit

U = Indicates a result < MDL
B = Indicates a result > = MDL but < RL

Report of Analysis

Client Sample ID:	SS39-DPT-10B		
Lab Sample ID:	F77897-17	**Date Sampled:**	11/06/10
Matrix:	SO - Soil	**Date Received:**	11/09/10
Method:	SW846 8015C SW846 3550C	**Percent Solids:**	90.9
Project:	Holloman AFB; Alamogordo, NM		

	File ID	DF	Analyzed	By	Prep Date	Prep Batch	Analytical Batch
Run #1	ZF37628.D	1	11/17/10	FEA	11/10/10	OP34997	GZF1576
Run #2							

	Initial Weight	Final Volume
Run #1	29.7 g	1.0 ml
Run #2		

CAS No.	Compound	Result	RL	MDL	Units	Q
	TPH (C10-C28) [a]	6.59	9.3	3.7	mg/kg	J

CAS No.	Surrogate Recoveries	Run# 1	Run# 2	Limits
84-15-1	o-Terphenyl	95%		49-108%

(a) Petroleum hydrocarbon pattern extends beyond C28.

ND = Not detected MDL - Method Detection Limit
RL = Reporting Limit
E = Indicates value exceeds calibration range

J = Indicates an estimated value
B = Indicates analyte found in associated method blank
N = Indicates presumptive evidence of a compound

Report of Analysis

Client Sample ID:	SS39-DPT-10B		
Lab Sample ID:	F77897-17	**Date Sampled:**	11/06/10
Matrix:	SO - Soil	**Date Received:**	11/09/10
		Percent Solids:	90.9
Project:	Holloman AFB; Alamogordo, NM		

Metals Analysis

Analyte	Result	RL	MDL	Units	DF	Prep	Analyzed	By	Method	Prep Method
Arsenic	0.67	0.39	0.078	mg/kg	1	11/15/10	11/16/10	RS	SW846 6010C [2]	SW846 3050B [6]
Barium	47.9	7.8	0.39	mg/kg	1	11/15/10	11/16/10	RS	SW846 6010C [2]	SW846 3050B [6]
Cadmium	3.1	0.16	0.039	mg/kg	1	11/15/10	11/16/10	RS	SW846 6010C [2]	SW846 3050B [6]
Chromium [a]	11.6	3.9	0.39	mg/kg	10	11/15/10	11/16/10	RS	SW846 6010C [3]	SW846 3050B [6]
Lead [a]	3.0 B	3.1	0.16	mg/kg	4	11/15/10	11/17/10	RS	SW846 6010C [4]	SW846 3050B [6]
Mercury	0.0092 U	0.092	0.0092	mg/kg	1	11/11/10	11/11/10	LM	SW846 7471B [1]	SW846 7471B [5]
Selenium [a]	1.6 U	7.8	1.6	mg/kg	10	11/15/10	11/16/10	RS	SW846 6010C [3]	SW846 3050B [6]
Silver	0.039 U	0.39	0.039	mg/kg	1	11/15/10	11/16/10	RS	SW846 6010C [2]	SW846 3050B [6]

(1) Instrument QC Batch: MA8503
(2) Instrument QC Batch: MA8510
(3) Instrument QC Batch: MA8512
(4) Instrument QC Batch: MA8516
(5) Prep QC Batch: MP19459
(6) Prep QC Batch: MP19483

(a) Elevated reporting limit(s) due to matrix interference.

RL = Reporting Limit
MDL = Method Detection Limit

U = Indicates a result < MDL
B = Indicates a result > = MDL but < RL

Report of Analysis

Client Sample ID:	SS39-DPT-10C		
Lab Sample ID:	F77897-18	**Date Sampled:**	11/06/10
Matrix:	SO - Soil	**Date Received:**	11/09/10
Method:	SW846 8015C SW846 3550C	**Percent Solids:**	89.9
Project:	Holloman AFB; Alamogordo, NM		

	File ID	DF	Analyzed	By	Prep Date	Prep Batch	Analytical Batch
Run #1	ZF37629.D	1	11/17/10	FEA	11/10/10	OP34997	GZF1576
Run #2							

	Initial Weight	Final Volume
Run #1	30.5 g	1.0 ml
Run #2		

CAS No.	Compound	Result	RL	MDL	Units	Q
	TPH (C10-C28)	ND	9.1	3.6	mg/kg	

CAS No.	Surrogate Recoveries	Run# 1	Run# 2	Limits
84-15-1	o-Terphenyl	95%		49-108%

ND = Not detected MDL - Method Detection Limit
RL = Reporting Limit
E = Indicates value exceeds calibration range

J = Indicates an estimated value
B = Indicates analyte found in associated method blank
N = Indicates presumptive evidence of a compound

Report of Analysis

Client Sample ID:	SS39-DPT-10C		
Lab Sample ID:	F77897-18	**Date Sampled:**	11/06/10
Matrix:	SO - Soil	**Date Received:**	11/09/10
		Percent Solids:	89.9
Project:	Holloman AFB; Alamogordo, NM		

Metals Analysis

Analyte	Result	RL	MDL	Units	DF	Prep	Analyzed	By	Method	Prep Method
Arsenic	1.9	0.47	0.094	mg/kg	1	11/15/10	11/16/10	RS	SW846 6010C [2]	SW846 3050B [6]
Barium	44.1	9.4	0.47	mg/kg	1	11/15/10	11/16/10	RS	SW846 6010C [2]	SW846 3050B [6]
Cadmium	0.66	0.19	0.047	mg/kg	1	11/15/10	11/16/10	RS	SW846 6010C [2]	SW846 3050B [6]
Chromium [a]	6.7	4.7	0.47	mg/kg	10	11/15/10	11/16/10	RS	SW846 6010C [3]	SW846 3050B [6]
Lead [a]	2.5 B	3.8	0.19	mg/kg	4	11/15/10	11/17/10	RS	SW846 6010C [4]	SW846 3050B [6]
Mercury	0.0087 U	0.087	0.0087	mg/kg	1	11/11/10	11/11/10	LM	SW846 7471B [1]	SW846 7471B [5]
Selenium [a]	1.9 U	9.4	1.9	mg/kg	10	11/15/10	11/16/10	RS	SW846 6010C [3]	SW846 3050B [6]
Silver	0.047 U	0.47	0.047	mg/kg	1	11/15/10	11/16/10	RS	SW846 6010C [2]	SW846 3050B [6]

(1) Instrument QC Batch: MA8503
(2) Instrument QC Batch: MA8510
(3) Instrument QC Batch: MA8512
(4) Instrument QC Batch: MA8516
(5) Prep QC Batch: MP19459
(6) Prep QC Batch: MP19483

(a) Elevated reporting limit(s) due to matrix interference.

RL = Reporting Limit
MDL = Method Detection Limit

U = Indicates a result < MDL
B = Indicates a result > = MDL but < RL

Report of Analysis

Client Sample ID:	SS39-DPT-11A		
Lab Sample ID:	F77897-19	**Date Sampled:**	11/07/10
Matrix:	SO - Soil	**Date Received:**	11/09/10
Method:	SW846 8015C SW846 3550C	**Percent Solids:**	93.7
Project:	Holloman AFB; Alamogordo, NM		

	File ID	DF	Analyzed	By	Prep Date	Prep Batch	Analytical Batch
Run #1	ZF37630.D	1	11/17/10	FEA	11/10/10	OP34997	GZF1576
Run #2							

	Initial Weight	Final Volume
Run #1	29.6 g	1.0 ml
Run #2		

CAS No.	Compound	Result	RL	MDL	Units	Q
	TPH (C10-C28)	ND	9.0	3.6	mg/kg	

CAS No.	Surrogate Recoveries	Run# 1	Run# 2	Limits
84-15-1	o-Terphenyl	86%		49-108%

ND = Not detected MDL - Method Detection Limit
RL = Reporting Limit
E = Indicates value exceeds calibration range

J = Indicates an estimated value
B = Indicates analyte found in associated method blank
N = Indicates presumptive evidence of a compound

Report of Analysis

Client Sample ID:	SS39-DPT-11A		
Lab Sample ID:	F77897-19	**Date Sampled:**	11/07/10
Matrix:	SO - Soil	**Date Received:**	11/09/10
		Percent Solids:	93.7
Project:	Holloman AFB; Alamogordo, NM		

Metals Analysis

Analyte	Result	RL	MDL	Units	DF	Prep	Analyzed	By	Method	Prep Method
Arsenic	0.63	0.40	0.081	mg/kg	1	11/15/10	11/16/10	RS	SW846 6010C [2]	SW846 3050B [6]
Barium	38.2	8.1	0.40	mg/kg	1	11/15/10	11/16/10	RS	SW846 6010C [2]	SW846 3050B [6]
Cadmium	0.35	0.16	0.040	mg/kg	1	11/15/10	11/16/10	RS	SW846 6010C [2]	SW846 3050B [6]
Chromium [a]	3.2 B	4.0	0.40	mg/kg	10	11/15/10	11/16/10	RS	SW846 6010C [3]	SW846 3050B [6]
Lead [a]	1.2 B	3.2	0.16	mg/kg	4	11/15/10	11/17/10	RS	SW846 6010C [4]	SW846 3050B [6]
Mercury	0.0085 U	0.085	0.0085	mg/kg	1	11/11/10	11/11/10	LM	SW846 7471B [1]	SW846 7471B [5]
Selenium [a]	1.6 U	8.1	1.6	mg/kg	10	11/15/10	11/16/10	RS	SW846 6010C [3]	SW846 3050B [6]
Silver	0.040 U	0.40	0.040	mg/kg	1	11/15/10	11/16/10	RS	SW846 6010C [2]	SW846 3050B [6]

(1) Instrument QC Batch: MA8503
(2) Instrument QC Batch: MA8510
(3) Instrument QC Batch: MA8512
(4) Instrument QC Batch: MA8516
(5) Prep QC Batch: MP19459
(6) Prep QC Batch: MP19483

(a) Elevated reporting limit(s) due to matrix interference.

RL = Reporting Limit
MDL = Method Detection Limit

U = Indicates a result < MDL
B = Indicates a result > = MDL but < RL

Report of Analysis

Client Sample ID:	SS39-DPT-11B		
Lab Sample ID:	F77897-20	**Date Sampled:**	11/07/10
Matrix:	SO - Soil	**Date Received:**	11/09/10
Method:	SW846 8015C SW846 3550C	**Percent Solids:**	91.6
Project:	Holloman AFB; Alamogordo, NM		

	File ID	DF	Analyzed	By	Prep Date	Prep Batch	Analytical Batch
Run #1	ZF37631.D	1	11/17/10	FEA	11/10/10	OP34997	GZF1576
Run #2							

	Initial Weight	Final Volume
Run #1	30.0 g	1.0 ml
Run #2		

CAS No.	Compound	Result	RL	MDL	Units	Q
	TPH (C10-C28)	ND	9.1	3.6	mg/kg	

CAS No.	Surrogate Recoveries	Run# 1	Run# 2	Limits
84-15-1	o-Terphenyl	82%		49-108%

ND = Not detected MDL - Method Detection Limit
RL = Reporting Limit
E = Indicates value exceeds calibration range

J = Indicates an estimated value
B = Indicates analyte found in associated method blank
N = Indicates presumptive evidence of a compound

Report of Analysis

Client Sample ID:	SS39-DPT-11B		
Lab Sample ID:	F77897-20	**Date Sampled:**	11/07/10
Matrix:	SO - Soil	**Date Received:**	11/09/10
		Percent Solids:	91.6
Project:	Holloman AFB; Alamogordo, NM		

Metals Analysis

Analyte	Result	RL	MDL	Units	DF	Prep	Analyzed	By	Method	Prep Method
Arsenic	0.59	0.51	0.10	mg/kg	1	11/17/10	11/17/10	RS	SW846 6010C [2]	SW846 3050B [5]
Barium	32.7	10	0.51	mg/kg	1	11/17/10	11/17/10	RS	SW846 6010C [2]	SW846 3050B [5]
Cadmium	0.10 B	0.20	0.051	mg/kg	1	11/17/10	11/17/10	RS	SW846 6010C [2]	SW846 3050B [5]
Chromium [a]	2.8 B	5.1	0.51	mg/kg	10	11/17/10	11/19/10	RS	SW846 6010C [3]	SW846 3050B [5]
Lead	0.96 B	1.0	0.051	mg/kg	1	11/17/10	11/17/10	RS	SW846 6010C [2]	SW846 3050B [5]
Mercury	0.0088 U	0.088	0.0088	mg/kg	1	11/11/10	11/11/10	LM	SW846 7471B [1]	SW846 7471B [4]
Selenium [a]	2.0 U	10	2.0	mg/kg	10	11/17/10	11/19/10	RS	SW846 6010C [3]	SW846 3050B [5]
Silver	0.051 U	0.51	0.051	mg/kg	1	11/17/10	11/17/10	RS	SW846 6010C [2]	SW846 3050B [5]

(1) Instrument QC Batch: MA8503
(2) Instrument QC Batch: MA8516
(3) Instrument QC Batch: MA8519
(4) Prep QC Batch: MP19459
(5) Prep QC Batch: MP19486

(a) Elevated reporting limit(s) due to matrix interference.

RL = Reporting Limit
MDL = Method Detection Limit

U = Indicates a result < MDL
B = Indicates a result > = MDL but < RL

Report of Analysis

Client Sample ID:	SS39-DPT-11C		
Lab Sample ID:	F77897-21	**Date Sampled:**	11/07/10
Matrix:	SO - Soil	**Date Received:**	11/09/10
Method:	SW846 8015C SW846 3550C	**Percent Solids:**	88.3
Project:	Holloman AFB; Alamogordo, NM		

	File ID	DF	Analyzed	By	Prep Date	Prep Batch	Analytical Batch
Run #1	ZF37632.D	1	11/17/10	FEA	11/10/10	OP34997	GZF1576
Run #2							

	Initial Weight	Final Volume
Run #1	29.7 g	1.0 ml
Run #2		

CAS No.	Compound	Result	RL	MDL	Units	Q
	TPH (C10-C28)	ND	9.5	3.8	mg/kg	

CAS No.	Surrogate Recoveries	Run# 1	Run# 2	Limits
84-15-1	o-Terphenyl	91%		49-108%

ND = Not detected MDL - Method Detection Limit
RL = Reporting Limit
E = Indicates value exceeds calibration range

J = Indicates an estimated value
B = Indicates analyte found in associated method blank
N = Indicates presumptive evidence of a compound

Report of Analysis

Client Sample ID:	SS39-DPT-11C		
Lab Sample ID:	F77897-21	**Date Sampled:**	11/07/10
Matrix:	SO - Soil	**Date Received:**	11/09/10
		Percent Solids:	88.3
Project:	Holloman AFB; Alamogordo, NM		

Metals Analysis

Analyte	Result	RL	MDL	Units	DF	Prep	Analyzed	By	Method	Prep Method
Arsenic	0.81	0.43	0.086	mg/kg	1	11/17/10	11/17/10	RS	SW846 6010C [2]	SW846 3050B [5]
Barium	72.0	8.6	0.43	mg/kg	1	11/17/10	11/17/10	RS	SW846 6010C [2]	SW846 3050B [5]
Cadmium	1.5	0.17	0.043	mg/kg	1	11/17/10	11/17/10	RS	SW846 6010C [2]	SW846 3050B [5]
Chromium [a]	13.0	4.3	0.43	mg/kg	10	11/17/10	11/19/10	RS	SW846 6010C [3]	SW846 3050B [5]
Lead [a]	5.9	4.3	0.22	mg/kg	5	11/17/10	11/19/10	RS	SW846 6010C [3]	SW846 3050B [5]
Mercury	0.0094 U	0.094	0.0094	mg/kg	1	11/12/10	11/12/10	LM	SW846 7471B [1]	SW846 7471B [4]
Selenium [a]	1.7 U	8.6	1.7	mg/kg	10	11/17/10	11/19/10	RS	SW846 6010C [3]	SW846 3050B [5]
Silver	0.043 U	0.43	0.043	mg/kg	1	11/17/10	11/17/10	RS	SW846 6010C [2]	SW846 3050B [5]

(1) Instrument QC Batch: MA8506
(2) Instrument QC Batch: MA8516
(3) Instrument QC Batch: MA8519
(4) Prep QC Batch: MP19469
(5) Prep QC Batch: MP19486

(a) Elevated reporting limit(s) due to matrix interference.

RL = Reporting Limit
MDL = Method Detection Limit

U = Indicates a result < MDL
B = Indicates a result > = MDL but < RL

Report of Analysis

Client Sample ID:	SS39-DPT-12A		
Lab Sample ID:	F77897-22	**Date Sampled:**	11/07/10
Matrix:	SO - Soil	**Date Received:**	11/09/10
Method:	SW846 8015C SW846 3550C	**Percent Solids:**	93.2
Project:	Holloman AFB; Alamogordo, NM		

	File ID	DF	Analyzed	By	Prep Date	Prep Batch	Analytical Batch
Run #1	ZF37635.D	1	11/17/10	FEA	11/10/10	OP34997	GZF1576
Run #2							

	Initial Weight	Final Volume
Run #1	30.0 g	1.0 ml
Run #2		

CAS No.	Compound	Result	RL	MDL	Units	Q
	TPH (C10-C28)	ND	8.9	3.6	mg/kg	

CAS No.	Surrogate Recoveries	Run# 1	Run# 2	Limits
84-15-1	o-Terphenyl	85%		49-108%

ND = Not detected MDL - Method Detection Limit
RL = Reporting Limit
E = Indicates value exceeds calibration range

J = Indicates an estimated value
B = Indicates analyte found in associated method blank
N = Indicates presumptive evidence of a compound

Report of Analysis

Client Sample ID:	SS39-DPT-12A		
Lab Sample ID:	F77897-22	**Date Sampled:**	11/07/10
Matrix:	SO - Soil	**Date Received:**	11/09/10
		Percent Solids:	93.2
Project:	Holloman AFB; Alamogordo, NM		

Metals Analysis

Analyte	Result	RL	MDL	Units	DF	Prep	Analyzed	By	Method	Prep Method
Arsenic	0.65	0.46	0.092	mg/kg	1	11/17/10	11/18/10	RS	SW846 6010C [2]	SW846 3050B [5]
Barium	36.5	9.2	0.46	mg/kg	1	11/17/10	11/18/10	RS	SW846 6010C [2]	SW846 3050B [5]
Cadmium	0.30	0.18	0.046	mg/kg	1	11/17/10	11/18/10	RS	SW846 6010C [2]	SW846 3050B [5]
Chromium [a]	2.8 B	4.6	0.46	mg/kg	10	11/17/10	11/19/10	RS	SW846 6010C [3]	SW846 3050B [5]
Lead	1.2	0.92	0.046	mg/kg	1	11/17/10	11/18/10	RS	SW846 6010C [2]	SW846 3050B [5]
Mercury	0.0078 U	0.078	0.0078	mg/kg	1	11/12/10	11/12/10	LM	SW846 7471B [1]	SW846 7471B [4]
Selenium [a]	1.8 U	9.2	1.8	mg/kg	10	11/17/10	11/19/10	RS	SW846 6010C [3]	SW846 3050B [5]
Silver	0.046 U	0.46	0.046	mg/kg	1	11/17/10	11/18/10	RS	SW846 6010C [2]	SW846 3050B [5]

(1) Instrument QC Batch: MA8506
(2) Instrument QC Batch: MA8516
(3) Instrument QC Batch: MA8519
(4) Prep QC Batch: MP19469
(5) Prep QC Batch: MP19486

(a) Elevated reporting limit(s) due to matrix interference.

RL = Reporting Limit
MDL = Method Detection Limit

U = Indicates a result < MDL
B = Indicates a result > = MDL but < RL

Report of Analysis

Client Sample ID:	SS39-DPT-12B		
Lab Sample ID:	F77897-23	**Date Sampled:**	11/07/10
Matrix:	SO - Soil	**Date Received:**	11/09/10
Method:	SW846 8015C SW846 3550C	**Percent Solids:**	94.1
Project:	Holloman AFB; Alamogordo, NM		

	File ID	DF	Analyzed	By	Prep Date	Prep Batch	Analytical Batch
Run #1	ZF37636.D	1	11/17/10	FEA	11/10/10	OP34997	GZF1576
Run #2							

	Initial Weight	Final Volume
Run #1	30.2 g	1.0 ml
Run #2		

CAS No.	Compound	Result	RL	MDL	Units	Q
	TPH (C10-C28)	ND	8.8	3.5	mg/kg	

CAS No.	Surrogate Recoveries	Run# 1	Run# 2	Limits
84-15-1	o-Terphenyl	83%		49-108%

ND = Not detected MDL - Method Detection Limit
RL = Reporting Limit
E = Indicates value exceeds calibration range

J = Indicates an estimated value
B = Indicates analyte found in associated method blank
N = Indicates presumptive evidence of a compound

Report of Analysis

Client Sample ID:	SS39-DPT-12B		
Lab Sample ID:	F77897-23	**Date Sampled:**	11/07/10
Matrix:	SO - Soil	**Date Received:**	11/09/10
		Percent Solids:	94.1
Project:	Holloman AFB; Alamogordo, NM		

Metals Analysis

Analyte	Result	RL	MDL	Units	DF	Prep	Analyzed	By	Method	Prep Method
Arsenic	0.59	0.53	0.11	mg/kg	1	11/17/10	11/18/10	RS	SW846 6010C [2]	SW846 3050B [5]
Barium	29.5	11	0.53	mg/kg	1	11/17/10	11/18/10	RS	SW846 6010C [2]	SW846 3050B [5]
Cadmium	0.053 U	0.21	0.053	mg/kg	1	11/17/10	11/18/10	RS	SW846 6010C [2]	SW846 3050B [5]
Chromium [a]	3.3 B	5.3	0.53	mg/kg	10	11/17/10	11/20/10	RS	SW846 6010C [3]	SW846 3050B [5]
Lead	1.0 B	1.1	0.053	mg/kg	1	11/17/10	11/18/10	RS	SW846 6010C [2]	SW846 3050B [5]
Mercury	0.0086 U	0.086	0.0086	mg/kg	1	11/12/10	11/12/10	LM	SW846 7471B [1]	SW846 7471B [4]
Selenium [a]	2.1 U	11	2.1	mg/kg	10	11/17/10	11/20/10	RS	SW846 6010C [3]	SW846 3050B [5]
Silver	0.053 U	0.53	0.053	mg/kg	1	11/17/10	11/18/10	RS	SW846 6010C [2]	SW846 3050B [5]

(1) Instrument QC Batch: MA8506
(2) Instrument QC Batch: MA8516
(3) Instrument QC Batch: MA8522
(4) Prep QC Batch: MP19469
(5) Prep QC Batch: MP19486

(a) Elevated reporting limit(s) due to matrix interference.

RL = Reporting Limit
MDL = Method Detection Limit

U = Indicates a result < MDL
B = Indicates a result > = MDL but < RL

Report of Analysis

Client Sample ID:	SS39-DPT-12C		
Lab Sample ID:	F77897-24	**Date Sampled:**	11/07/10
Matrix:	SO - Soil	**Date Received:**	11/09/10
Method:	SW846 8015C SW846 3550C	**Percent Solids:**	86.3
Project:	Holloman AFB; Alamogordo, NM		

	File ID	DF	Analyzed	By	Prep Date	Prep Batch	Analytical Batch
Run #1	ZF37637.D	1	11/17/10	FEA	11/10/10	OP34997	GZF1576
Run #2							

	Initial Weight	Final Volume
Run #1	29.9 g	1.0 ml
Run #2		

CAS No.	Compound	Result	RL	MDL	Units	Q
	TPH (C10-C28)	ND	9.7	3.9	mg/kg	

CAS No.	Surrogate Recoveries	Run# 1	Run# 2	Limits
84-15-1	o-Terphenyl	77%		49-108%

ND = Not detected MDL - Method Detection Limit
RL = Reporting Limit
E = Indicates value exceeds calibration range

J = Indicates an estimated value
B = Indicates analyte found in associated method blank
N = Indicates presumptive evidence of a compound

Report of Analysis

Client Sample ID:	SS39-DPT-12C		
Lab Sample ID:	F77897-24	**Date Sampled:**	11/07/10
Matrix:	SO - Soil	**Date Received:**	11/09/10
		Percent Solids:	86.3
Project:	Holloman AFB; Alamogordo, NM		

Metals Analysis

Analyte	Result	RL	MDL	Units	DF	Prep	Analyzed	By	Method	Prep Method
Arsenic	0.90	0.53	0.11	mg/kg	1	11/17/10	11/17/10	RS	SW846 6010C [2]	SW846 3050B [6]
Barium	84.5	11	0.53	mg/kg	1	11/17/10	11/17/10	RS	SW846 6010C [2]	SW846 3050B [6]
Cadmium	0.11 B	0.21	0.053	mg/kg	1	11/17/10	11/17/10	RS	SW846 6010C [2]	SW846 3050B [6]
Chromium [a]	9.0	5.3	0.53	mg/kg	10	11/17/10	11/19/10	RS	SW846 6010C [4]	SW846 3050B [6]
Lead [a]	3.7 B	5.3	0.26	mg/kg	5	11/17/10	11/19/10	RS	SW846 6010C [3]	SW846 3050B [6]
Mercury	0.0093 U	0.093	0.0093	mg/kg	1	11/12/10	11/12/10	LM	SW846 7471B [1]	SW846 7471B [5]
Selenium [a]	2.1 U	11	2.1	mg/kg	10	11/17/10	11/19/10	RS	SW846 6010C [4]	SW846 3050B [6]
Silver	0.053 U	0.53	0.053	mg/kg	1	11/17/10	11/17/10	RS	SW846 6010C [2]	SW846 3050B [6]

(1) Instrument QC Batch: MA8506
(2) Instrument QC Batch: MA8516
(3) Instrument QC Batch: MA8519
(4) Instrument QC Batch: MA8522
(5) Prep QC Batch: MP19470
(6) Prep QC Batch: MP19486

(a) Elevated reporting limit(s) due to matrix interference.

RL = Reporting Limit
MDL = Method Detection Limit

U = Indicates a result < MDL
B = Indicates a result > = MDL but < RL

Report of Analysis

Client Sample ID:	SS39-DPT-13A		
Lab Sample ID:	F77897-25	**Date Sampled:**	11/07/10
Matrix:	SO - Soil	**Date Received:**	11/09/10
Method:	SW846 8015C SW846 3550C	**Percent Solids:**	94.8
Project:	Holloman AFB; Alamogordo, NM		

	File ID	DF	Analyzed	By	Prep Date	Prep Batch	Analytical Batch
Run #1	ZF37640.D	1	11/17/10	FEA	11/10/10	OP34997	GZF1576
Run #2							

	Initial Weight	Final Volume
Run #1	29.5 g	1.0 ml
Run #2		

CAS No.	Compound	Result	RL	MDL	Units	Q
	TPH (C10-C28)	ND	8.9	3.6	mg/kg	

CAS No.	Surrogate Recoveries	Run# 1	Run# 2	Limits
84-15-1	o-Terphenyl	78%		49-108%

ND = Not detected MDL - Method Detection Limit
RL = Reporting Limit
E = Indicates value exceeds calibration range

J = Indicates an estimated value
B = Indicates analyte found in associated method blank
N = Indicates presumptive evidence of a compound

Report of Analysis

Client Sample ID:	SS39-DPT-13A		
Lab Sample ID:	F77897-25	**Date Sampled:**	11/07/10
Matrix:	SO - Soil	**Date Received:**	11/09/10
		Percent Solids:	94.8
Project:	Holloman AFB; Alamogordo, NM		

Metals Analysis

Analyte	Result	RL	MDL	Units	DF	Prep	Analyzed	By	Method	Prep Method
Arsenic	0.59	0.45	0.089	mg/kg	1	11/17/10	11/18/10	RS	SW846 6010C [2]	SW846 3050B [5]
Barium	32.2	8.9	0.45	mg/kg	1	11/17/10	11/18/10	RS	SW846 6010C [2]	SW846 3050B [5]
Cadmium	0.30	0.18	0.045	mg/kg	1	11/17/10	11/18/10	RS	SW846 6010C [2]	SW846 3050B [5]
Chromium [a]	2.7 B	4.5	0.45	mg/kg	10	11/17/10	11/19/10	RS	SW846 6010C [3]	SW846 3050B [5]
Lead	1.3	0.89	0.045	mg/kg	1	11/17/10	11/18/10	RS	SW846 6010C [2]	SW846 3050B [5]
Mercury	0.013 B	0.082	0.0082	mg/kg	1	11/12/10	11/12/10	LM	SW846 7471B [1]	SW846 7471B [4]
Selenium [a]	1.8 U	8.9	1.8	mg/kg	10	11/17/10	11/19/10	RS	SW846 6010C [3]	SW846 3050B [5]
Silver	0.045 U	0.45	0.045	mg/kg	1	11/17/10	11/18/10	RS	SW846 6010C [2]	SW846 3050B [5]

(1) Instrument QC Batch: MA8506
(2) Instrument QC Batch: MA8516
(3) Instrument QC Batch: MA8519
(4) Prep QC Batch: MP19470
(5) Prep QC Batch: MP19486

(a) Elevated reporting limit(s) due to matrix interference.

RL = Reporting Limit
MDL = Method Detection Limit

U = Indicates a result < MDL
B = Indicates a result > = MDL but < RL

Report of Analysis

Client Sample ID:	SS39-DPT-13B		
Lab Sample ID:	F77897-26	**Date Sampled:**	11/07/10
Matrix:	SO - Soil	**Date Received:**	11/09/10
Method:	SW846 8015C SW846 3550C	**Percent Solids:**	97.1
Project:	Holloman AFB; Alamogordo, NM		

	File ID	DF	Analyzed	By	Prep Date	Prep Batch	Analytical Batch
Run #1	ZF37641.D	1	11/17/10	FEA	11/10/10	OP34997	GZF1576
Run #2							

	Initial Weight	Final Volume
Run #1	29.5 g	1.0 ml
Run #2		

CAS No.	Compound	Result	RL	MDL	Units	Q
	TPH (C10-C28)	ND	8.7	3.5	mg/kg	

CAS No.	Surrogate Recoveries	Run# 1	Run# 2	Limits
84-15-1	o-Terphenyl	83%		49-108%

ND = Not detected MDL - Method Detection Limit
RL = Reporting Limit
E = Indicates value exceeds calibration range

J = Indicates an estimated value
B = Indicates analyte found in associated method blank
N = Indicates presumptive evidence of a compound

Report of Analysis

Client Sample ID:	SS39-DPT-13B		
Lab Sample ID:	F77897-26	**Date Sampled:**	11/07/10
Matrix:	SO - Soil	**Date Received:**	11/09/10
		Percent Solids:	97.1
Project:	Holloman AFB; Alamogordo, NM		

Metals Analysis

Analyte	Result	RL	MDL	Units	DF	Prep	Analyzed	By	Method	Prep Method
Arsenic	0.44 B	0.51	0.10	mg/kg	1	11/17/10	11/18/10	RS	SW846 6010C [2]	SW846 3050B [5]
Barium	15.0	10	0.51	mg/kg	1	11/17/10	11/18/10	RS	SW846 6010C [2]	SW846 3050B [5]
Cadmium	0.11 B	0.21	0.051	mg/kg	1	11/17/10	11/18/10	RS	SW846 6010C [2]	SW846 3050B [5]
Chromium [a]	1.8 B	5.1	0.51	mg/kg	10	11/17/10	11/19/10	RS	SW846 6010C [3]	SW846 3050B [5]
Lead	0.72 B	1.0	0.051	mg/kg	1	11/17/10	11/18/10	RS	SW846 6010C [2]	SW846 3050B [5]
Mercury	0.0082 U	0.082	0.0082	mg/kg	1	11/12/10	11/12/10	LM	SW846 7471B [1]	SW846 7471B [4]
Selenium [a]	2.1 U	10	2.1	mg/kg	10	11/17/10	11/19/10	RS	SW846 6010C [3]	SW846 3050B [5]
Silver	0.051 U	0.51	0.051	mg/kg	1	11/17/10	11/18/10	RS	SW846 6010C [2]	SW846 3050B [5]

(1) Instrument QC Batch: MA8506
(2) Instrument QC Batch: MA8516
(3) Instrument QC Batch: MA8519
(4) Prep QC Batch: MP19470
(5) Prep QC Batch: MP19486

(a) Elevated reporting limit(s) due to matrix interference.

RL = Reporting Limit
MDL = Method Detection Limit

U = Indicates a result < MDL
B = Indicates a result > = MDL but < RL

Report of Analysis

Client Sample ID:	SS39-DPT-13C		
Lab Sample ID:	F77897-27	**Date Sampled:**	11/07/10
Matrix:	SO - Soil	**Date Received:**	11/09/10
Method:	SW846 8015C SW846 3550C	**Percent Solids:**	87.5
Project:	Holloman AFB; Alamogordo, NM		

	File ID	DF	Analyzed	By	Prep Date	Prep Batch	Analytical Batch
Run #1	ZF37642.D	1	11/17/10	FEA	11/10/10	OP34997	GZF1576
Run #2							

	Initial Weight	Final Volume
Run #1	30.5 g	1.0 ml
Run #2		

CAS No.	Compound	Result	RL	MDL	Units	Q
	TPH (C10-C28)	ND	9.4	3.7	mg/kg	

CAS No.	Surrogate Recoveries	Run# 1	Run# 2	Limits
84-15-1	o-Terphenyl	89%		49-108%

ND = Not detected MDL - Method Detection Limit
RL = Reporting Limit
E = Indicates value exceeds calibration range

J = Indicates an estimated value
B = Indicates analyte found in associated method blank
N = Indicates presumptive evidence of a compound

Report of Analysis

Client Sample ID:	SS39-DPT-13C		
Lab Sample ID:	F77897-27	**Date Sampled:**	11/07/10
Matrix:	SO - Soil	**Date Received:**	11/09/10
		Percent Solids:	87.5
Project:	Holloman AFB; Alamogordo, NM		

Metals Analysis

Analyte	Result	RL	MDL	Units	DF	Prep	Analyzed	By	Method	Prep Method
Arsenic	1.8	0.54	0.11	mg/kg	1	11/17/10	11/18/10	RS	SW846 6010C [2]	SW846 3050B [5]
Barium	51.1	11	0.54	mg/kg	1	11/17/10	11/18/10	RS	SW846 6010C [2]	SW846 3050B [5]
Cadmium	0.71	0.22	0.054	mg/kg	1	11/17/10	11/18/10	RS	SW846 6010C [2]	SW846 3050B [5]
Chromium [a]	6.1	5.4	0.54	mg/kg	10	11/17/10	11/19/10	RS	SW846 6010C [3]	SW846 3050B [5]
Lead [a]	2.5 B	5.4	0.27	mg/kg	5	11/17/10	11/19/10	RS	SW846 6010C [3]	SW846 3050B [5]
Mercury	0.0095 U	0.095	0.0095	mg/kg	1	11/12/10	11/12/10	LM	SW846 7471B [1]	SW846 7471B [4]
Selenium [a]	2.2 U	11	2.2	mg/kg	10	11/17/10	11/19/10	RS	SW846 6010C [3]	SW846 3050B [5]
Silver	0.054 U	0.54	0.054	mg/kg	1	11/17/10	11/18/10	RS	SW846 6010C [2]	SW846 3050B [5]

(1) Instrument QC Batch: MA8506
(2) Instrument QC Batch: MA8516
(3) Instrument QC Batch: MA8519
(4) Prep QC Batch: MP19470
(5) Prep QC Batch: MP19486

(a) Elevated reporting limit(s) due to matrix interference.

RL = Reporting Limit
MDL = Method Detection Limit

U = Indicates a result < MDL
B = Indicates a result > = MDL but < RL

Report of Analysis

Client Sample ID:	SS39-DPT-14A		
Lab Sample ID:	F77897-28	**Date Sampled:**	11/07/10
Matrix:	SO - Soil	**Date Received:**	11/09/10
Method:	SW846 8015C SW846 3550C	**Percent Solids:**	94.8
Project:	Holloman AFB; Alamogordo, NM		

	File ID	DF	Analyzed	By	Prep Date	Prep Batch	Analytical Batch
Run #1	ZF37643.D	1	11/17/10	FEA	11/10/10	OP34997	GZF1576
Run #2							

	Initial Weight	Final Volume
Run #1	30.2 g	1.0 ml
Run #2		

CAS No.	Compound	Result	RL	MDL	Units	Q
	TPH (C10-C28)	ND	8.7	3.5	mg/kg	

CAS No.	Surrogate Recoveries	Run# 1	Run# 2	Limits
84-15-1	o-Terphenyl	82%		49-108%

ND = Not detected MDL - Method Detection Limit
RL = Reporting Limit
E = Indicates value exceeds calibration range

J = Indicates an estimated value
B = Indicates analyte found in associated method blank
N = Indicates presumptive evidence of a compound

Report of Analysis

Client Sample ID:	SS39-DPT-14A		
Lab Sample ID:	F77897-28	**Date Sampled:**	11/07/10
Matrix:	SO - Soil	**Date Received:**	11/09/10
		Percent Solids:	94.8
Project:	Holloman AFB; Alamogordo, NM		

Metals Analysis

Analyte	Result	RL	MDL	Units	DF	Prep	Analyzed	By	Method	Prep Method
Arsenic	0.60	0.47	0.093	mg/kg	1	11/17/10	11/18/10	RS	SW846 6010C [2]	SW846 3050B [5]
Barium	29.0	9.3	0.47	mg/kg	1	11/17/10	11/18/10	RS	SW846 6010C [2]	SW846 3050B [5]
Cadmium	0.32	0.19	0.047	mg/kg	1	11/17/10	11/18/10	RS	SW846 6010C [2]	SW846 3050B [5]
Chromium [a]	2.1 B	4.7	0.47	mg/kg	10	11/17/10	11/19/10	RS	SW846 6010C [3]	SW846 3050B [5]
Lead [a]	1.2 B	4.7	0.23	mg/kg	5	11/17/10	11/19/10	RS	SW846 6010C [3]	SW846 3050B [5]
Mercury	0.0085 U	0.085	0.0085	mg/kg	1	11/12/10	11/12/10	LM	SW846 7471B [1]	SW846 7471B [4]
Selenium [a]	1.9 U	9.3	1.9	mg/kg	10	11/17/10	11/19/10	RS	SW846 6010C [3]	SW846 3050B [5]
Silver	0.047 U	0.47	0.047	mg/kg	1	11/17/10	11/18/10	RS	SW846 6010C [2]	SW846 3050B [5]

(1) Instrument QC Batch: MA8506
(2) Instrument QC Batch: MA8516
(3) Instrument QC Batch: MA8519
(4) Prep QC Batch: MP19470
(5) Prep QC Batch: MP19486

(a) Elevated reporting limit(s) due to matrix interference.

RL = Reporting Limit
MDL = Method Detection Limit

U = Indicates a result < MDL
B = Indicates a result > = MDL but < RL

Report of Analysis

Client Sample ID:	SS39-DPT-14B		
Lab Sample ID:	F77897-29	**Date Sampled:**	11/07/10
Matrix:	SO - Soil	**Date Received:**	11/09/10
Method:	SW846 8015C SW846 3550C	**Percent Solids:**	95.7
Project:	Holloman AFB; Alamogordo, NM		

	File ID	DF	Analyzed	By	Prep Date	Prep Batch	Analytical Batch
Run #1	ZF37644.D	1	11/17/10	FEA	11/10/10	OP34997	GZF1576
Run #2							

	Initial Weight	Final Volume
Run #1	29.5 g	1.0 ml
Run #2		

CAS No.	Compound	Result	RL	MDL	Units	Q
	TPH (C10-C28)	ND	8.9	3.5	mg/kg	

CAS No.	Surrogate Recoveries	Run# 1	Run# 2	Limits
84-15-1	o-Terphenyl	85%		49-108%

ND = Not detected MDL - Method Detection Limit
RL = Reporting Limit
E = Indicates value exceeds calibration range

J = Indicates an estimated value
B = Indicates analyte found in associated method blank
N = Indicates presumptive evidence of a compound

Report of Analysis

Client Sample ID:	SS39-DPT-14B		
Lab Sample ID:	F77897-29	**Date Sampled:**	11/07/10
Matrix:	SO - Soil	**Date Received:**	11/09/10
		Percent Solids:	95.7
Project:	Holloman AFB; Alamogordo, NM		

Metals Analysis

Analyte	Result	RL	MDL	Units	DF	Prep	Analyzed	By	Method	Prep Method
Arsenic	0.51	0.42	0.085	mg/kg	1	11/17/10	11/18/10	RS	SW846 6010C [2]	SW846 3050B [5]
Barium	15.6	8.5	0.42	mg/kg	1	11/17/10	11/18/10	RS	SW846 6010C [2]	SW846 3050B [5]
Cadmium	0.17	0.17	0.042	mg/kg	1	11/17/10	11/18/10	RS	SW846 6010C [2]	SW846 3050B [5]
Chromium [a]	1.8 B	4.2	0.42	mg/kg	10	11/17/10	11/19/10	RS	SW846 6010C [3]	SW846 3050B [5]
Lead [a]	0.94 B	4.2	0.21	mg/kg	5	11/17/10	11/19/10	RS	SW846 6010C [3]	SW846 3050B [5]
Mercury	0.0083 U	0.083	0.0083	mg/kg	1	11/12/10	11/12/10	LM	SW846 7471B [1]	SW846 7471B [4]
Selenium [a]	1.7 U	8.5	1.7	mg/kg	10	11/17/10	11/19/10	RS	SW846 6010C [3]	SW846 3050B [5]
Silver	0.042 U	0.42	0.042	mg/kg	1	11/17/10	11/18/10	RS	SW846 6010C [2]	SW846 3050B [5]

(1) Instrument QC Batch: MA8506
(2) Instrument QC Batch: MA8516
(3) Instrument QC Batch: MA8519
(4) Prep QC Batch: MP19470
(5) Prep QC Batch: MP19486

(a) Elevated reporting limit(s) due to matrix interference.

RL = Reporting Limit
MDL = Method Detection Limit

U = Indicates a result < MDL
B = Indicates a result > = MDL but < RL

Report of Analysis

Client Sample ID:	SS39-DPT-14C		
Lab Sample ID:	F77897-30	**Date Sampled:**	11/07/10
Matrix:	SO - Soil	**Date Received:**	11/09/10
Method:	SW846 8015C SW846 3550C	**Percent Solids:**	88.8
Project:	Holloman AFB; Alamogordo, NM		

	File ID	DF	Analyzed	By	Prep Date	Prep Batch	Analytical Batch
Run #1	ZF37648.D	1	11/17/10	FEA	11/10/10	OP34997	GZF1576
Run #2							

	Initial Weight	Final Volume
Run #1	30.5 g	1.0 ml
Run #2		

CAS No.	Compound	Result	RL	MDL	Units	Q
	TPH (C10-C28)	ND	9.2	3.7	mg/kg	

CAS No.	Surrogate Recoveries	Run# 1	Run# 2	Limits
84-15-1	o-Terphenyl	90%		49-108%

ND = Not detected MDL - Method Detection Limit
RL = Reporting Limit
E = Indicates value exceeds calibration range

J = Indicates an estimated value
B = Indicates analyte found in associated method blank
N = Indicates presumptive evidence of a compound

Report of Analysis

Client Sample ID:	SS39-DPT-14C		
Lab Sample ID:	F77897-30	**Date Sampled:**	11/07/10
Matrix:	SO - Soil	**Date Received:**	11/09/10
		Percent Solids:	88.8
Project:	Holloman AFB; Alamogordo, NM		

Metals Analysis

Analyte	Result	RL	MDL	Units	DF	Prep	Analyzed	By	Method	Prep Method
Arsenic	0.58	0.42	0.083	mg/kg	1	11/17/10	11/18/10	RS	SW846 6010C [2]	SW846 3050B [5]
Barium	49.2	8.3	0.42	mg/kg	1	11/17/10	11/18/10	RS	SW846 6010C [2]	SW846 3050B [5]
Cadmium	0.25	0.17	0.042	mg/kg	1	11/17/10	11/18/10	RS	SW846 6010C [2]	SW846 3050B [5]
Chromium [a]	2.8 B	4.2	0.42	mg/kg	10	11/17/10	11/19/10	RS	SW846 6010C [3]	SW846 3050B [5]
Lead [a]	0.71 B	4.2	0.21	mg/kg	5	11/17/10	11/19/10	RS	SW846 6010C [3]	SW846 3050B [5]
Mercury	0.0094 U	0.094	0.0094	mg/kg	1	11/12/10	11/12/10	LM	SW846 7471B [1]	SW846 7471B [4]
Selenium [a]	1.7 U	8.3	1.7	mg/kg	10	11/17/10	11/19/10	RS	SW846 6010C [3]	SW846 3050B [5]
Silver	0.042 U	0.42	0.042	mg/kg	1	11/17/10	11/18/10	RS	SW846 6010C [2]	SW846 3050B [5]

(1) Instrument QC Batch: MA8506
(2) Instrument QC Batch: MA8516
(3) Instrument QC Batch: MA8519
(4) Prep QC Batch: MP19470
(5) Prep QC Batch: MP19492

(a) Elevated reporting limit(s) due to matrix interference.

RL = Reporting Limit
MDL = Method Detection Limit

U = Indicates a result < MDL
B = Indicates a result > = MDL but < RL

Report of Analysis

Client Sample ID:	SS39-DPT-DUP01		
Lab Sample ID:	F77897-31	**Date Sampled:**	11/06/10
Matrix:	SO - Soil	**Date Received:**	11/09/10
Method:	SW846 8015C SW846 3550C	**Percent Solids:**	92.1
Project:	Holloman AFB; Alamogordo, NM		

	File ID	DF	Analyzed	By	Prep Date	Prep Batch	Analytical Batch
Run #1	ZF37649.D	1	11/17/10	FEA	11/10/10	OP34997	GZF1576
Run #2							

	Initial Weight	Final Volume
Run #1	30.3 g	1.0 ml
Run #2		

CAS No.	Compound	Result	RL	MDL	Units	Q
	TPH (C10-C28)	ND	9.0	3.6	mg/kg	

CAS No.	Surrogate Recoveries	Run# 1	Run# 2	Limits
84-15-1	o-Terphenyl	84%		49-108%

ND = Not detected MDL - Method Detection Limit
RL = Reporting Limit
E = Indicates value exceeds calibration range

J = Indicates an estimated value
B = Indicates analyte found in associated method blank
N = Indicates presumptive evidence of a compound

Report of Analysis

Client Sample ID:	SS39-DPT-DUP01		
Lab Sample ID:	F77897-31	**Date Sampled:**	11/06/10
Matrix:	SO - Soil	**Date Received:**	11/09/10
		Percent Solids:	92.1
Project:	Holloman AFB; Alamogordo, NM		

Metals Analysis

Analyte	Result	RL	MDL	Units	DF	Prep	Analyzed	By	Method	Prep Method
Arsenic	0.23 B	0.52	0.10	mg/kg	1	11/17/10	11/18/10	RS	SW846 6010C [2]	SW846 3050B [5]
Barium	26.8	10	0.52	mg/kg	1	11/17/10	11/18/10	RS	SW846 6010C [2]	SW846 3050B [5]
Cadmium	0.26	0.21	0.052	mg/kg	1	11/17/10	11/18/10	RS	SW846 6010C [2]	SW846 3050B [5]
Chromium [a]	5.4	5.2	0.52	mg/kg	10	11/17/10	11/19/10	RS	SW846 6010C [3]	SW846 3050B [5]
Lead	1.4	1.0	0.052	mg/kg	1	11/17/10	11/18/10	RS	SW846 6010C [2]	SW846 3050B [5]
Mercury	0.0085 U	0.085	0.0085	mg/kg	1	11/12/10	11/12/10	LM	SW846 7471B [1]	SW846 7471B [4]
Selenium [a]	2.1 U	10	2.1	mg/kg	10	11/17/10	11/19/10	RS	SW846 6010C [3]	SW846 3050B [5]
Silver	0.052 U	0.52	0.052	mg/kg	1	11/17/10	11/18/10	RS	SW846 6010C [2]	SW846 3050B [5]

(1) Instrument QC Batch: MA8506
(2) Instrument QC Batch: MA8516
(3) Instrument QC Batch: MA8519
(4) Prep QC Batch: MP19470
(5) Prep QC Batch: MP19492

(a) Elevated reporting limit(s) due to matrix interference.

RL = Reporting Limit
MDL = Method Detection Limit

U = Indicates a result < MDL
B = Indicates a result > = MDL but < RL

Report of Analysis

Client Sample ID:	SS39-DPT-DUP02		
Lab Sample ID:	F77897-32	**Date Sampled:**	11/06/10
Matrix:	SO - Soil	**Date Received:**	11/09/10
Method:	SW846 8015C SW846 3550C	**Percent Solids:**	89.5
Project:	Holloman AFB; Alamogordo, NM		

	File ID	DF	Analyzed	By	Prep Date	Prep Batch	Analytical Batch
Run #1	ZF37650.D	1	11/17/10	FEA	11/10/10	OP34997	GZF1576
Run #2							

	Initial Weight	Final Volume
Run #1	30.0 g	1.0 ml
Run #2		

CAS No.	Compound	Result	RL	MDL	Units	Q
	TPH (C10-C28)	ND	9.3	3.7	mg/kg	

CAS No.	Surrogate Recoveries	Run# 1	Run# 2	Limits
84-15-1	o-Terphenyl	89%		49-108%

ND = Not detected MDL - Method Detection Limit
RL = Reporting Limit
E = Indicates value exceeds calibration range

J = Indicates an estimated value
B = Indicates analyte found in associated method blank
N = Indicates presumptive evidence of a compound

Report of Analysis

Client Sample ID:	SS39-DPT-DUP02		
Lab Sample ID:	F77897-32	**Date Sampled:**	11/06/10
Matrix:	SO - Soil	**Date Received:**	11/09/10
		Percent Solids:	89.5
Project:	Holloman AFB; Alamogordo, NM		

Metals Analysis

Analyte	Result	RL	MDL	Units	DF	Prep	Analyzed	By	Method	Prep Method
Arsenic	1.7	0.47	0.094	mg/kg	1	11/17/10	11/18/10	RS	SW846 6010C [2]	SW846 3050B [5]
Barium	44.2	9.4	0.47	mg/kg	1	11/17/10	11/18/10	RS	SW846 6010C [2]	SW846 3050B [5]
Cadmium	0.16 B	0.19	0.047	mg/kg	1	11/17/10	11/18/10	RS	SW846 6010C [2]	SW846 3050B [5]
Chromium [a]	8.9	4.7	0.47	mg/kg	10	11/17/10	11/20/10	RS	SW846 6010C [3]	SW846 3050B [5]
Lead	2.9	0.94	0.047	mg/kg	1	11/17/10	11/18/10	RS	SW846 6010C [2]	SW846 3050B [5]
Mercury	0.0082 U	0.082	0.0082	mg/kg	1	11/12/10	11/12/10	LM	SW846 7471B [1]	SW846 7471B [4]
Selenium [a]	1.9 U	9.4	1.9	mg/kg	10	11/17/10	11/20/10	RS	SW846 6010C [3]	SW846 3050B [5]
Silver	0.047 U	0.47	0.047	mg/kg	1	11/17/10	11/18/10	RS	SW846 6010C [2]	SW846 3050B [5]

(1) Instrument QC Batch: MA8506
(2) Instrument QC Batch: MA8516
(3) Instrument QC Batch: MA8522
(4) Prep QC Batch: MP19470
(5) Prep QC Batch: MP19492

(a) Elevated reporting limit(s) due to matrix interference.

RL = Reporting Limit
MDL = Method Detection Limit

U = Indicates a result < MDL
B = Indicates a result > = MDL but < RL

Report of Analysis

Client Sample ID:	SS39-DPT-DUP03		
Lab Sample ID:	F77897-33	**Date Sampled:**	11/07/10
Matrix:	SO - Soil	**Date Received:**	11/09/10
Method:	SW846 8015C SW846 3550C	**Percent Solids:**	95.0
Project:	Holloman AFB; Alamogordo, NM		

	File ID	DF	Analyzed	By	Prep Date	Prep Batch	Analytical Batch
Run #1	ZF37651.D	1	11/18/10	FEA	11/10/10	OP34997	GZF1576
Run #2							

	Initial Weight	Final Volume
Run #1	29.9 g	1.0 ml
Run #2		

CAS No.	Compound	Result	RL	MDL	Units	Q
	TPH (C10-C28)	ND	8.8	3.5	mg/kg	

CAS No.	Surrogate Recoveries	Run# 1	Run# 2	Limits
84-15-1	o-Terphenyl	80%		49-108%

ND = Not detected MDL - Method Detection Limit
RL = Reporting Limit
E = Indicates value exceeds calibration range

J = Indicates an estimated value
B = Indicates analyte found in associated method blank
N = Indicates presumptive evidence of a compound

Report of Analysis

Client Sample ID:	SS39-DPT-DUP03		
Lab Sample ID:	F77897-33	**Date Sampled:**	11/07/10
Matrix:	SO - Soil	**Date Received:**	11/09/10
		Percent Solids:	95.0
Project:	Holloman AFB; Alamogordo, NM		

Metals Analysis

Analyte	Result	RL	MDL	Units	DF	Prep	Analyzed	By	Method	Prep Method
Arsenic	0.44	0.43	0.087	mg/kg	1	11/17/10	11/18/10	RS	SW846 6010C [2]	SW846 3050B [5]
Barium	27.3	8.7	0.43	mg/kg	1	11/17/10	11/18/10	RS	SW846 6010C [2]	SW846 3050B [5]
Cadmium	0.34	0.17	0.043	mg/kg	1	11/17/10	11/18/10	RS	SW846 6010C [2]	SW846 3050B [5]
Chromium [a]	2.2 B	4.3	0.43	mg/kg	10	11/17/10	11/19/10	RS	SW846 6010C [3]	SW846 3050B [5]
Lead	1.4	0.87	0.043	mg/kg	1	11/17/10	11/18/10	RS	SW846 6010C [2]	SW846 3050B [5]
Mercury	0.0076 U	0.076	0.0076	mg/kg	1	11/12/10	11/12/10	LM	SW846 7471B [1]	SW846 7471B [4]
Selenium [a]	1.7 U	8.7	1.7	mg/kg	10	11/17/10	11/19/10	RS	SW846 6010C [3]	SW846 3050B [5]
Silver	0.043 U	0.43	0.043	mg/kg	1	11/17/10	11/18/10	RS	SW846 6010C [2]	SW846 3050B [5]

(1) Instrument QC Batch: MA8506
(2) Instrument QC Batch: MA8516
(3) Instrument QC Batch: MA8519
(4) Prep QC Batch: MP19470
(5) Prep QC Batch: MP19492

(a) Elevated reporting limit(s) due to matrix interference.

RL = Reporting Limit
MDL = Method Detection Limit

U = Indicates a result < MDL
B = Indicates a result > = MDL but < RL

Report of Analysis

Client Sample ID:	SD27-DPT-13A		
Lab Sample ID:	F77897-36	**Date Sampled:**	11/05/10
Matrix:	SO - Soil	**Date Received:**	11/09/10
Method:	SW846 8270D SW846 3550C	**Percent Solids:**	85.7
Project:	Holloman AFB; Alamogordo, NM		

	File ID	DF	Analyzed	By	Prep Date	Prep Batch	Analytical Batch
Run #1	U022240.D	1	11/15/10	NAF	11/12/10	OP35016	SU1063
Run #2							

	Initial Weight	Final Volume
Run #1	30.4 g	1.0 ml
Run #2		

BN PAH List

CAS No.	Compound	Result	RL	MDL	Units	Q
83-32-9	Acenaphthene	ND	190	19	ug/kg	
208-96-8	Acenaphthylene	ND	190	19	ug/kg	
120-12-7	Anthracene	ND	190	19	ug/kg	
56-55-3	Benzo(a)anthracene	ND	190	19	ug/kg	
50-32-8	Benzo(a)pyrene	ND	190	19	ug/kg	
205-99-2	Benzo(b)fluoranthene	ND	190	19	ug/kg	
191-24-2	Benzo(g,h,i)perylene	ND	190	19	ug/kg	
207-08-9	Benzo(k)fluoranthene	ND	190	19	ug/kg	
218-01-9	Chrysene	ND	190	19	ug/kg	
53-70-3	Dibenzo(a,h)anthracene	ND	190	19	ug/kg	
206-44-0	Fluoranthene	ND	190	19	ug/kg	
86-73-7	Fluorene	ND	190	19	ug/kg	
193-39-5	Indeno(1,2,3-cd)pyrene	ND	190	19	ug/kg	
90-12-0	1-Methylnaphthalene	ND	190	19	ug/kg	
91-57-6	2-Methylnaphthalene	ND	190	19	ug/kg	
91-20-3	Naphthalene	ND	190	31	ug/kg	
85-01-8	Phenanthrene	ND	190	19	ug/kg	
129-00-0	Pyrene	ND	190	19	ug/kg	

CAS No.	Surrogate Recoveries	Run# 1	Run# 2	Limits
4165-60-0	Nitrobenzene-d5	80%		40-105%
321-60-8	2-Fluorobiphenyl	75%		43-107%
1718-51-0	Terphenyl-d14	80%		45-119%

ND = Not detected MDL - Method Detection Limit
RL = Reporting Limit
E = Indicates value exceeds calibration range

J = Indicates an estimated value
B = Indicates analyte found in associated method blank
N = Indicates presumptive evidence of a compound

Report of Analysis

Client Sample ID:	SD27-DPT-13A		
Lab Sample ID:	F77897-36	**Date Sampled:**	11/05/10
Matrix:	SO - Soil	**Date Received:**	11/09/10
Method:	SW846 8015C SW846 3550C	**Percent Solids:**	85.7
Project:	Holloman AFB; Alamogordo, NM		

	File ID	DF	Analyzed	By	Prep Date	Prep Batch	Analytical Batch
Run #1	YY18787.D	1	11/20/10	MV	11/11/10	OP35013	GYY677
Run #2							

	Initial Weight	Final Volume
Run #1	30.5 g	1.0 ml
Run #2		

CAS No.	Compound	Result	RL	MDL	Units	Q
	TPH (C10-C28)	ND	9.6	3.8	mg/kg	

CAS No.	Surrogate Recoveries	Run# 1	Run# 2	Limits
84-15-1	o-Terphenyl	89%		49-108%

ND = Not detected MDL - Method Detection Limit
RL = Reporting Limit
E = Indicates value exceeds calibration range

J = Indicates an estimated value
B = Indicates analyte found in associated method blank
N = Indicates presumptive evidence of a compound

Report of Analysis

Client Sample ID:	SD27-DPT-13A		
Lab Sample ID:	F77897-36	**Date Sampled:**	11/05/10
Matrix:	SO - Soil	**Date Received:**	11/09/10
		Percent Solids:	85.7
Project:	Holloman AFB; Alamogordo, NM		

Metals Analysis

Analyte	Result	RL	MDL	Units	DF	Prep	Analyzed	By	Method	Prep Method
Arsenic	0.81	0.38	0.076	mg/kg	1	11/17/10	11/18/10	RS	SW846 6010C [1]	SW846 3050B [4]
Barium	21.3	7.6	0.38	mg/kg	1	11/17/10	11/18/10	RS	SW846 6010C [1]	SW846 3050B [4]
Cadmium	0.27	0.15	0.038	mg/kg	1	11/17/10	11/18/10	RS	SW846 6010C [1]	SW846 3050B [4]
Chromium [a]	2.8 B	3.8	0.38	mg/kg	10	11/17/10	11/19/10	RS	SW846 6010C [3]	SW846 3050B [4]
Lead	1.1	0.76	0.038	mg/kg	1	11/17/10	11/18/10	RS	SW846 6010C [1]	SW846 3050B [4]
Mercury	0.0097 U	0.097	0.0097	mg/kg	1	11/18/10	11/18/10	LM	SW846 7471B [2]	SW846 7471B [5]
Selenium [a]	1.5 U	7.6	1.5	mg/kg	10	11/17/10	11/19/10	RS	SW846 6010C [3]	SW846 3050B [4]
Silver	0.038 U	0.38	0.038	mg/kg	1	11/17/10	11/18/10	RS	SW846 6010C [1]	SW846 3050B [4]

(1) Instrument QC Batch: MA8516
(2) Instrument QC Batch: MA8518
(3) Instrument QC Batch: MA8519
(4) Prep QC Batch: MP19492
(5) Prep QC Batch: MP19500

(a) Elevated reporting limit(s) due to matrix interference.

RL = Reporting Limit
MDL = Method Detection Limit

U = Indicates a result < MDL
B = Indicates a result > = MDL but < RL

Report of Analysis

Client Sample ID:	SD27-DPT-13B		
Lab Sample ID:	F77897-37	**Date Sampled:**	11/05/10
Matrix:	SO - Soil	**Date Received:**	11/09/10
Method:	SW846 8270D SW846 3550C	**Percent Solids:**	83.3
Project:	Holloman AFB; Alamogordo, NM		

	File ID	DF	Analyzed	By	Prep Date	Prep Batch	Analytical Batch
Run #1	U022241.D	1	11/15/10	NAF	11/12/10	OP35016	SU1063
Run #2							

	Initial Weight	Final Volume
Run #1	30.4 g	1.0 ml
Run #2		

BN PAH List

CAS No.	Compound	Result	RL	MDL	Units	Q
83-32-9	Acenaphthene	ND	200	20	ug/kg	
208-96-8	Acenaphthylene	ND	200	20	ug/kg	
120-12-7	Anthracene	ND	200	20	ug/kg	
56-55-3	Benzo(a)anthracene	ND	200	20	ug/kg	
50-32-8	Benzo(a)pyrene	ND	200	20	ug/kg	
205-99-2	Benzo(b)fluoranthene	ND	200	20	ug/kg	
191-24-2	Benzo(g,h,i)perylene	ND	200	20	ug/kg	
207-08-9	Benzo(k)fluoranthene	ND	200	20	ug/kg	
218-01-9	Chrysene	ND	200	20	ug/kg	
53-70-3	Dibenzo(a,h)anthracene	ND	200	20	ug/kg	
206-44-0	Fluoranthene	ND	200	20	ug/kg	
86-73-7	Fluorene	ND	200	20	ug/kg	
193-39-5	Indeno(1,2,3-cd)pyrene	ND	200	20	ug/kg	
90-12-0	1-Methylnaphthalene	142	200	20	ug/kg	J
91-57-6	2-Methylnaphthalene	ND	200	20	ug/kg	
91-20-3	Naphthalene	ND	200	32	ug/kg	
85-01-8	Phenanthrene	ND	200	20	ug/kg	
129-00-0	Pyrene	ND	200	20	ug/kg	

CAS No.	Surrogate Recoveries	Run# 1	Run# 2	Limits
4165-60-0	Nitrobenzene-d5	70%		40-105%
321-60-8	2-Fluorobiphenyl	61%		43-107%
1718-51-0	Terphenyl-d14	79%		45-119%

ND = Not detected MDL - Method Detection Limit
RL = Reporting Limit
E = Indicates value exceeds calibration range

J = Indicates an estimated value
B = Indicates analyte found in associated method blank
N = Indicates presumptive evidence of a compound

Report of Analysis

Client Sample ID:	SD27-DPT-13B		
Lab Sample ID:	F77897-37	**Date Sampled:**	11/05/10
Matrix:	SO - Soil	**Date Received:**	11/09/10
Method:	SW846 8015C SW846 3550C	**Percent Solids:**	83.3
Project:	Holloman AFB; Alamogordo, NM		

	File ID	DF	Analyzed	By	Prep Date	Prep Batch	Analytical Batch
Run #1	YY18788.D	1	11/20/10	MV	11/11/10	OP35013	GYY677
Run #2							

	Initial Weight	Final Volume
Run #1	30.1 g	1.0 ml
Run #2		

CAS No.	Compound	Result	RL	MDL	Units	Q
	TPH (C10-C28) [a]	66.9	10	4.0	mg/kg	

CAS No.	Surrogate Recoveries	Run# 1	Run# 2	Limits
84-15-1	o-Terphenyl	99%		49-108%

(a) Petroleum hydrocarbon pattern begins before C10.

ND = Not detected MDL - Method Detection Limit
RL = Reporting Limit
E = Indicates value exceeds calibration range

J = Indicates an estimated value
B = Indicates analyte found in associated method blank
N = Indicates presumptive evidence of a compound

Report of Analysis

Client Sample ID:	SD27-DPT-13B		
Lab Sample ID:	F77897-37	**Date Sampled:**	11/05/10
Matrix:	SO - Soil	**Date Received:**	11/09/10
		Percent Solids:	83.3
Project:	Holloman AFB; Alamogordo, NM		

Metals Analysis

Analyte	Result	RL	MDL	Units	DF	Prep	Analyzed	By	Method	Prep Method
Arsenic	0.97	0.48	0.097	mg/kg	1	11/17/10	11/19/10	RS	SW846 6010C [3]	SW846 3050B [5]
Barium	25.5	9.7	0.48	mg/kg	1	11/17/10	11/20/10	RS	SW846 6010C [4]	SW846 3050B [5]
Cadmium	0.25	0.19	0.048	mg/kg	1	11/17/10	11/18/10	RS	SW846 6010C [1]	SW846 3050B [5]
Chromium [a]	4.1 B	4.8	0.48	mg/kg	10	11/17/10	11/19/10	RS	SW846 6010C [3]	SW846 3050B [5]
Lead	1.2	0.97	0.048	mg/kg	1	11/17/10	11/18/10	RS	SW846 6010C [1]	SW846 3050B [5]
Mercury	0.0098 U	0.098	0.0098	mg/kg	1	11/18/10	11/18/10	LM	SW846 7471B [2]	SW846 7471B [6]
Selenium [a]	1.9 U	9.7	1.9	mg/kg	10	11/17/10	11/19/10	RS	SW846 6010C [3]	SW846 3050B [5]
Silver	0.048 U	0.48	0.048	mg/kg	1	11/17/10	11/18/10	RS	SW846 6010C [1]	SW846 3050B [5]

(1) Instrument QC Batch: MA8516
(2) Instrument QC Batch: MA8518
(3) Instrument QC Batch: MA8519
(4) Instrument QC Batch: MA8522
(5) Prep QC Batch: MP19492
(6) Prep QC Batch: MP19500

(a) Elevated reporting limit(s) due to matrix interference.

RL = Reporting Limit
MDL = Method Detection Limit

U = Indicates a result < MDL
B = Indicates a result > = MDL but < RL

Report of Analysis

Client Sample ID:	SD27-DPT-13C		
Lab Sample ID:	F77897-38	**Date Sampled:**	11/05/10
Matrix:	SO - Soil	**Date Received:**	11/09/10
Method:	SW846 8270D SW846 3550C	**Percent Solids:**	88.7
Project:	Holloman AFB; Alamogordo, NM		

	File ID	DF	Analyzed	By	Prep Date	Prep Batch	Analytical Batch
Run #1	U022242.D	1	11/15/10	NAF	11/12/10	OP35016	SU1063
Run #2							

	Initial Weight	Final Volume
Run #1	30.5 g	1.0 ml
Run #2		

BN PAH List

CAS No.	Compound	Result	RL	MDL	Units	Q
83-32-9	Acenaphthene	ND	180	18	ug/kg	
208-96-8	Acenaphthylene	ND	180	18	ug/kg	
120-12-7	Anthracene	ND	180	18	ug/kg	
56-55-3	Benzo(a)anthracene	ND	180	18	ug/kg	
50-32-8	Benzo(a)pyrene	ND	180	18	ug/kg	
205-99-2	Benzo(b)fluoranthene	ND	180	18	ug/kg	
191-24-2	Benzo(g,h,i)perylene	ND	180	18	ug/kg	
207-08-9	Benzo(k)fluoranthene	ND	180	18	ug/kg	
218-01-9	Chrysene	ND	180	18	ug/kg	
53-70-3	Dibenzo(a,h)anthracene	ND	180	18	ug/kg	
206-44-0	Fluoranthene	ND	180	18	ug/kg	
86-73-7	Fluorene	ND	180	18	ug/kg	
193-39-5	Indeno(1,2,3-cd)pyrene	ND	180	18	ug/kg	
90-12-0	1-Methylnaphthalene	ND	180	18	ug/kg	
91-57-6	2-Methylnaphthalene	ND	180	18	ug/kg	
91-20-3	Naphthalene	ND	180	30	ug/kg	
85-01-8	Phenanthrene	ND	180	18	ug/kg	
129-00-0	Pyrene	ND	180	18	ug/kg	

CAS No.	Surrogate Recoveries	Run# 1	Run# 2	Limits
4165-60-0	Nitrobenzene-d5	86%		40-105%
321-60-8	2-Fluorobiphenyl	80%		43-107%
1718-51-0	Terphenyl-d14	84%		45-119%

ND = Not detected MDL - Method Detection Limit
RL = Reporting Limit
E = Indicates value exceeds calibration range

J = Indicates an estimated value
B = Indicates analyte found in associated method blank
N = Indicates presumptive evidence of a compound

Report of Analysis

Client Sample ID:	SD27-DPT-13C		
Lab Sample ID:	F77897-38	**Date Sampled:**	11/05/10
Matrix:	SO - Soil	**Date Received:**	11/09/10
Method:	SW846 8015C SW846 3550C	**Percent Solids:**	88.7
Project:	Holloman AFB; Alamogordo, NM		

	File ID	DF	Analyzed	By	Prep Date	Prep Batch	Analytical Batch
Run #1	YY18789.D	1	11/20/10	MV	11/11/10	OP35013	GYY677
Run #2							

	Initial Weight	Final Volume
Run #1	30.1 g	1.0 ml
Run #2		

CAS No.	Compound	Result	RL	MDL	Units	Q
	TPH (C10-C28)	ND	9.4	3.7	mg/kg	

CAS No.	Surrogate Recoveries	Run# 1	Run# 2	Limits
84-15-1	o-Terphenyl	106%		49-108%

ND = Not detected MDL - Method Detection Limit
RL = Reporting Limit
E = Indicates value exceeds calibration range

J = Indicates an estimated value
B = Indicates analyte found in associated method blank
N = Indicates presumptive evidence of a compound

Report of Analysis

Client Sample ID:	SD27-DPT-13C		
Lab Sample ID:	F77897-38	**Date Sampled:**	11/05/10
Matrix:	SO - Soil	**Date Received:**	11/09/10
		Percent Solids:	88.7
Project:	Holloman AFB; Alamogordo, NM		

Metals Analysis

Analyte	Result	RL	MDL	Units	DF	Prep	Analyzed	By	Method	Prep Method
Arsenic	0.61	0.39	0.078	mg/kg	1	11/17/10	11/19/10	RS	SW846 6010C [3]	SW846 3050B [5]
Barium	37.5	7.8	0.39	mg/kg	1	11/17/10	11/20/10	RS	SW846 6010C [4]	SW846 3050B [5]
Cadmium	0.086 B	0.16	0.039	mg/kg	1	11/17/10	11/18/10	RS	SW846 6010C [1]	SW846 3050B [5]
Chromium [a]	3.9	3.9	0.39	mg/kg	10	11/17/10	11/20/10	RS	SW846 6010C [4]	SW846 3050B [5]
Lead	1.2	0.78	0.039	mg/kg	1	11/17/10	11/18/10	RS	SW846 6010C [1]	SW846 3050B [5]
Mercury	0.013 B	0.091	0.0091	mg/kg	1	11/18/10	11/18/10	LM	SW846 7471B [2]	SW846 7471B [6]
Selenium [a]	1.6 U	7.8	1.6	mg/kg	10	11/17/10	11/20/10	RS	SW846 6010C [4]	SW846 3050B [5]
Silver	0.039 U	0.39	0.039	mg/kg	1	11/17/10	11/18/10	RS	SW846 6010C [1]	SW846 3050B [5]

(1) Instrument QC Batch: MA8516
(2) Instrument QC Batch: MA8518
(3) Instrument QC Batch: MA8519
(4) Instrument QC Batch: MA8522
(5) Prep QC Batch: MP19492
(6) Prep QC Batch: MP19500

(a) Elevated reporting limit(s) due to matrix interference.

RL = Reporting Limit
MDL = Method Detection Limit

U = Indicates a result < MDL
B = Indicates a result > = MDL but < RL

Report of Analysis

Client Sample ID:	SD27-ER-11052010		
Lab Sample ID:	F77897-39	**Date Sampled:**	11/05/10
Matrix:	AQ - Equipment Blank	**Date Received:**	11/09/10
Method:	SW846 8260B	**Percent Solids:**	n/a
Project:	Holloman AFB; Alamogordo, NM		

	File ID	DF	Analyzed	By	Prep Date	Prep Batch	Analytical Batch
Run #1	C074951.D	1	11/18/10	AJ	n/a	n/a	VC2986
Run #2 [a]	F046031.D	1	11/23/10	SH	n/a	n/a	VF1348

	Purge Volume
Run #1	5.0 ml
Run #2	5.0 ml

VOA Special List

CAS No.	Compound	Result	RL	MDL	Units	Q
67-64-1	Acetone	ND	25	10	ug/l	
75-05-8	Acetonitrile	ND [b]	20	5.0	ug/l	
107-02-8	Acrolein	ND	20	5.0	ug/l	
107-13-1	Acrylonitrile	ND	10	3.0	ug/l	
107-05-1	Allyl chloride	ND [b]	2.0	0.30	ug/l	
71-43-2	Benzene	ND	1.0	0.20	ug/l	
100-44-7	Benzyl Chloride	ND	2.0	0.50	ug/l	
108-86-1	Bromobenzene	ND	1.0	0.25	ug/l	
74-97-5	Bromochloromethane	ND	1.0	0.22	ug/l	
75-27-4	Bromodichloromethane	0.41	1.0	0.20	ug/l	J
75-25-2	Bromoform	ND	1.0	0.20	ug/l	
104-51-8	n-Butylbenzene	ND	1.0	0.26	ug/l	
135-98-8	sec-Butylbenzene	ND	1.0	0.22	ug/l	
98-06-6	tert-Butylbenzene	ND	1.0	0.27	ug/l	
108-90-7	Chlorobenzene	ND	1.0	0.20	ug/l	
75-00-3	Chloroethane	ND	2.0	0.50	ug/l	
67-66-3	Chloroform	1.6	1.0	0.22	ug/l	
544-10-5	1-Chlorohexane	ND	2.0	0.25	ug/l	
95-49-8	o-Chlorotoluene	ND	1.0	0.22	ug/l	
106-43-4	p-Chlorotoluene	ND	1.0	0.20	ug/l	
110-75-8	2-Chloroethyl vinyl ether	ND	5.0	1.2	ug/l	
75-15-0	Carbon disulfide	ND	2.0	0.50	ug/l	
56-23-5	Carbon tetrachloride	ND	1.0	0.25	ug/l	
75-34-3	1,1-Dichloroethane	ND	1.0	0.25	ug/l	
75-35-4	1,1-Dichloroethylene	ND	1.0	0.23	ug/l	
563-58-6	1,1-Dichloropropene	ND	1.0	0.28	ug/l	
96-12-8	1,2-Dibromo-3-chloropropane	ND	2.0	0.50	ug/l	
106-93-4	1,2-Dibromoethane	ND	1.0	0.37	ug/l	
107-06-2	1,2-Dichloroethane	ND	1.0	0.20	ug/l	
78-87-5	1,2-Dichloropropane	ND	1.0	0.25	ug/l	
142-28-9	1,3-Dichloropropane	ND	1.0	0.20	ug/l	
594-20-7	2,2-Dichloropropane	ND	1.0	0.44	ug/l	

ND = Not detected MDL - Method Detection Limit
RL = Reporting Limit
E = Indicates value exceeds calibration range

J = Indicates an estimated value
B = Indicates analyte found in associated method blank
N = Indicates presumptive evidence of a compound

Report of Analysis

Client Sample ID:	SD27-ER-11052010		
Lab Sample ID:	F77897-39	**Date Sampled:**	11/05/10
Matrix:	AQ - Equipment Blank	**Date Received:**	11/09/10
Method:	SW846 8260B	**Percent Solids:**	n/a
Project:	Holloman AFB; Alamogordo, NM		

VOA Special List

CAS No.	Compound	Result	RL	MDL	Units	Q
124-48-1	Dibromochloromethane	ND	1.0	0.20	ug/l	
75-71-8	Dichlorodifluoromethane	ND	2.0	0.50	ug/l	
156-59-2	cis-1,2-Dichloroethylene	ND	1.0	0.26	ug/l	
10061-01-5	cis-1,3-Dichloropropene	ND	1.0	0.20	ug/l	
1476-11-5	cis-1,4-Dichloro-2-Butene	ND [b]	10	1.0	ug/l	
541-73-1	m-Dichlorobenzene	ND	1.0	0.20	ug/l	
95-50-1	o-Dichlorobenzene	ND	1.0	0.25	ug/l	
106-46-7	p-Dichlorobenzene	ND	1.0	0.23	ug/l	
156-60-5	trans-1,2-Dichloroethylene	ND	1.0	0.35	ug/l	
10061-02-6	trans-1,3-Dichloropropene	ND	1.0	0.20	ug/l	
100-41-4	Ethylbenzene	ND	1.0	0.20	ug/l	
97-63-2	Ethyl methacrylate	ND [b]	5.0	1.0	ug/l	
76-13-1	Freon 113	ND	1.0	0.47	ug/l	
591-78-6	2-Hexanone	ND	10	4.0	ug/l	
87-68-3	Hexachlorobutadiene	ND	2.0	0.80	ug/l	
110-54-3	Hexane	ND	2.0	0.59	ug/l	
98-82-8	Isopropylbenzene	ND	1.0	0.20	ug/l	
99-87-6	p-Isopropyltoluene	ND	1.0	0.21	ug/l	
108-10-1	4-Methyl-2-pentanone	ND	5.0	2.0	ug/l	
126-98-7	Methacrylonitrile	ND [b]	20	5.0	ug/l	
74-83-9	Methyl bromide	ND	2.0	0.50	ug/l	
74-87-3	Methyl chloride	ND	2.0	0.50	ug/l	
74-88-4	Methyl iodide	ND	1.0	0.20	ug/l	
80-62-6	Methyl methacrylate	ND [b]	5.0	1.0	ug/l	
74-95-3	Methylene bromide	ND	2.0	0.25	ug/l	
75-09-2	Methylene chloride	ND	5.0	2.0	ug/l	
78-93-3	Methyl ethyl ketone	ND	5.0	2.0	ug/l	
1634-04-4	Methyl Tert Butyl Ether	ND	1.0	0.34	ug/l	
91-20-3	Naphthalene	ND	5.0	1.0	ug/l	
76-01-7	Pentachloroethane	ND [b]	10	2.0	ug/l	
107-12-0	Propionitrile	ND [b]	20	5.0	ug/l	
103-65-1	n-Propylbenzene	ND	1.0	0.20	ug/l	
100-42-5	Styrene	ND	1.0	0.20	ug/l	
630-20-6	1,1,1,2-Tetrachloroethane	ND	1.0	0.20	ug/l	
71-55-6	1,1,1-Trichloroethane	ND	1.0	0.20	ug/l	
79-34-5	1,1,2,2-Tetrachloroethane	ND	1.0	0.23	ug/l	
79-00-5	1,1,2-Trichloroethane	ND	1.0	0.22	ug/l	
87-61-6	1,2,3-Trichlorobenzene	ND	1.0	0.50	ug/l	
96-18-4	1,2,3-Trichloropropane	ND	2.0	0.30	ug/l	
120-82-1	1,2,4-Trichlorobenzene	ND	1.0	0.50	ug/l	

ND = Not detected MDL - Method Detection Limit
RL = Reporting Limit
E = Indicates value exceeds calibration range

J = Indicates an estimated value
B = Indicates analyte found in associated method blank
N = Indicates presumptive evidence of a compound

Report of Analysis

Client Sample ID:	SD27-ER-11052010		
Lab Sample ID:	F77897-39	**Date Sampled:**	11/05/10
Matrix:	AQ - Equipment Blank	**Date Received:**	11/09/10
Method:	SW846 8260B	**Percent Solids:**	n/a
Project:	Holloman AFB; Alamogordo, NM		

VOA Special List

CAS No.	Compound	Result	RL	MDL	Units	Q
95-63-6	1,2,4-Trimethylbenzene	ND	2.0	0.27	ug/l	
108-67-8	1,3,5-Trimethylbenzene	ND	2.0	0.21	ug/l	
127-18-4	Tetrachloroethylene	ND	1.0	0.25	ug/l	
108-88-3	Toluene	ND	1.0	0.20	ug/l	
79-01-6	Trichloroethylene	ND	1.0	0.26	ug/l	
75-69-4	Trichlorofluoromethane	ND	2.0	0.50	ug/l	
110-57-6	Trans-1,4-Dichloro-2-Butene	ND	10	2.0	ug/l	
75-01-4	Vinyl chloride	ND	1.0	0.22	ug/l	
108-05-4	Vinyl Acetate	ND	10	2.0	ug/l	
	m,p-Xylene	ND	2.0	0.32	ug/l	
95-47-6	o-Xylene	ND	1.0	0.20	ug/l	

CAS No.	Surrogate Recoveries	Run# 1	Run# 2	Limits
1868-53-7	Dibromofluoromethane	111%	106%	87-116%
17060-07-0	1,2-Dichloroethane-D4	119%	94%	76-127%
2037-26-5	Toluene-D8	99%	99%	86-112%
460-00-4	4-Bromofluorobenzene	110%	89%	84-120%

(a) Sample re-analyzed beyond hold time; reported results are considered minimum values.
(b) Result is from Run# 2

ND = Not detected MDL - Method Detection Limit
RL = Reporting Limit
E = Indicates value exceeds calibration range

J = Indicates an estimated value
B = Indicates analyte found in associated method blank
N = Indicates presumptive evidence of a compound

Report of Analysis

Client Sample ID:	SD27-ER-11052010		
Lab Sample ID:	F77897-39	**Date Sampled:**	11/05/10
Matrix:	AQ - Equipment Blank	**Date Received:**	11/09/10
Method:	SW846 8270D SW846 3510C	**Percent Solids:**	n/a
Project:	Holloman AFB; Alamogordo, NM		

	File ID	DF	Analyzed	By	Prep Date	Prep Batch	Analytical Batch
Run #1	U022413.D	1	11/20/10	NAF	11/12/10	OP35019	SU1071
Run #2							

	Initial Volume	Final Volume
Run #1	1010 ml	1.0 ml
Run #2		

BN PAH List

CAS No.	Compound	Result	RL	MDL	Units	Q
83-32-9	Acenaphthene	ND	5.0	0.50	ug/l	
208-96-8	Acenaphthylene	ND	5.0	0.50	ug/l	
120-12-7	Anthracene	ND	5.0	0.50	ug/l	
56-55-3	Benzo(a)anthracene	ND	5.0	0.50	ug/l	
50-32-8	Benzo(a)pyrene	ND	5.0	0.50	ug/l	
205-99-2	Benzo(b)fluoranthene	ND	5.0	0.50	ug/l	
191-24-2	Benzo(g,h,i)perylene	ND	5.0	0.50	ug/l	
207-08-9	Benzo(k)fluoranthene	ND	5.0	0.50	ug/l	
218-01-9	Chrysene	ND	5.0	0.50	ug/l	
53-70-3	Dibenzo(a,h)anthracene	ND	5.0	0.51	ug/l	
206-44-0	Fluoranthene	ND	5.0	0.50	ug/l	
86-73-7	Fluorene	ND	5.0	0.50	ug/l	
193-39-5	Indeno(1,2,3-cd)pyrene	ND	5.0	0.50	ug/l	
90-12-0	1-Methylnaphthalene	ND	5.0	0.50	ug/l	
91-57-6	2-Methylnaphthalene	ND	5.0	0.56	ug/l	
91-20-3	Naphthalene	ND	5.0	0.79	ug/l	
85-01-8	Phenanthrene	ND	5.0	0.50	ug/l	
129-00-0	Pyrene	ND	5.0	0.50	ug/l	

CAS No.	Surrogate Recoveries	Run# 1	Run# 2	Limits
4165-60-0	Nitrobenzene-d5	82%		42-108%
321-60-8	2-Fluorobiphenyl	71%		40-106%
1718-51-0	Terphenyl-d14	83%		39-121%

ND = Not detected MDL - Method Detection Limit
RL = Reporting Limit
E = Indicates value exceeds calibration range

J = Indicates an estimated value
B = Indicates analyte found in associated method blank
N = Indicates presumptive evidence of a compound

Report of Analysis

Client Sample ID:	SD27-ER-11052010		
Lab Sample ID:	F77897-39	**Date Sampled:**	11/05/10
Matrix:	AQ - Equipment Blank	**Date Received:**	11/09/10
Method:	SW846 8015C	**Percent Solids:**	n/a
Project:	Holloman AFB; Alamogordo, NM		

	File ID	DF	Analyzed	By	Prep Date	Prep Batch	Analytical Batch
Run #1	CD100550.D	1	11/17/10	WV	n/a	n/a	GCD4155
Run #2							

	Purge Volume
Run #1	5.0 ml
Run #2	

CAS No.	Compound	Result	RL	MDL	Units	Q
	TPH-GRO (C6-C10)	ND	0.10	0.050	mg/l	

CAS No.	Surrogate Recoveries	Run# 1	Run# 2	Limits
460-00-4	4-Bromofluorobenzene	93%		57-129%
98-08-8	aaa-Trifluorotoluene	82%		58-120%

ND = Not detected MDL - Method Detection Limit
RL = Reporting Limit
E = Indicates value exceeds calibration range

J = Indicates an estimated value
B = Indicates analyte found in associated method blank
N = Indicates presumptive evidence of a compound

Report of Analysis

Client Sample ID:	SD27-ER-11052010		
Lab Sample ID:	F77897-39	**Date Sampled:**	11/05/10
Matrix:	AQ - Equipment Blank	**Date Received:**	11/09/10
Method:	SW846 8015C SW846 3510C	**Percent Solids:**	n/a
Project:	Holloman AFB; Alamogordo, NM		

	File ID	DF	Analyzed	By	Prep Date	Prep Batch	Analytical Batch
Run #1	ZF37674.D	1	11/18/10	FEA	11/11/10	OP35007	GZF1576
Run #2							

	Initial Volume	Final Volume
Run #1	1050 ml	1.0 ml
Run #2		

CAS No.	Compound	Result	RL	MDL	Units	Q
	TPH (C10-C28)	0.108	0.24	0.095	mg/l	J

CAS No.	Surrogate Recoveries	Run# 1	Run# 2	Limits
84-15-1	o-Terphenyl	95%		42-114%

ND = Not detected MDL - Method Detection Limit
RL = Reporting Limit
E = Indicates value exceeds calibration range

J = Indicates an estimated value
B = Indicates analyte found in associated method blank
N = Indicates presumptive evidence of a compound

Report of Analysis

Client Sample ID:	SD27-ER-11052010		
Lab Sample ID:	F77897-39	**Date Sampled:**	11/05/10
Matrix:	AQ - Equipment Blank	**Date Received:**	11/09/10
		Percent Solids:	n/a
Project:	Holloman AFB; Alamogordo, NM		

Total Metals Analysis

Analyte	Result	RL	MDL	Units	DF	Prep	Analyzed	By	Method	Prep Method
Arsenic	2.0 U	10	2.0	ug/l	1	11/11/10	11/11/10	RS	SW846 6010C [2]	SW846 3010A [4]
Barium	5.0 U	200	5.0	ug/l	1	11/11/10	11/11/10	RS	SW846 6010C [2]	SW846 3010A [4]
Cadmium	1.0 U	5.0	1.0	ug/l	1	11/11/10	11/11/10	RS	SW846 6010C [2]	SW846 3010A [4]
Chromium	1.0 U	10	1.0	ug/l	1	11/11/10	11/11/10	RS	SW846 6010C [2]	SW846 3010A [4]
Lead	1.0 U	5.0	1.0	ug/l	1	11/11/10	11/11/10	RS	SW846 6010C [2]	SW846 3010A [4]
Mercury	0.050 U	1.0	0.050	ug/l	1	11/10/10	11/10/10	LM	SW846 7470A [1]	SW846 7470A [3]
Selenium	2.0 U	10	2.0	ug/l	1	11/11/10	11/11/10	RS	SW846 6010C [2]	SW846 3010A [4]
Silver	1.0 U	10	1.0	ug/l	1	11/11/10	11/11/10	RS	SW846 6010C [2]	SW846 3010A [4]

(1) Instrument QC Batch: MA8499
(2) Instrument QC Batch: MA8504
(3) Prep QC Batch: MP19449
(4) Prep QC Batch: MP19463

RL = Reporting Limit
MDL = Method Detection Limit

U = Indicates a result < MDL
B = Indicates a result > = MDL but < RL

Report of Analysis

Client Sample ID:	SS39-TCLP-SUMP2		
Lab Sample ID:	F77897-40	**Date Sampled:**	11/07/10
Matrix:	SO - Soil	**Date Received:**	11/09/10
		Percent Solids:	n/a
Project:	Holloman AFB; Alamogordo, NM		

Metals Analysis, TCLP Leachate SW846 1311

Analyte	Result	HW#	MCL	RL	MDL	Units	DF	Prep	Analyzed	By	Method
Lead	0.010 U	D008	5.0	0.50	0.010	mg/l	1	11/12/10	11/12/10	RS	SW846 6010C [1]

(1) Instrument QC Batch: MA8509
(2) Prep QC Batch: MP19474

RL = Reporting Limit MDL = Method Detection Limit U = Indicates a result < MDL
MCL = Maximum Contamination Level (40 CFR 261 6/96) B = Indicates a result > = MDL but < RL

Report of Analysis

Client Sample ID:	SS39-TCLP-SUMP1		
Lab Sample ID:	F77897-41	**Date Sampled:**	11/07/10
Matrix:	SO - Soil	**Date Received:**	11/09/10
		Percent Solids:	n/a
Project:	Holloman AFB; Alamogordo, NM		

Metals Analysis, TCLP Leachate SW846 1311

Analyte	Result	HW#	MCL	RL	MDL	Units	DF	Prep	Analyzed	By	Method
Lead	0.010 U	D008	5.0	0.50	0.010	mg/l	1	11/12/10	11/12/10	RS	SW846 6010C [1]

(1) Instrument QC Batch: MA8509
(2) Prep QC Batch: MP19474

RL = Reporting Limit MDL = Method Detection Limit U = Indicates a result < MDL
MCL = Maximum Contamination Level (40 CFR 261 6/96) B = Indicates a result > = MDL but < RL

Report of Analysis

Client Sample ID:	SS39-IGN		
Lab Sample ID:	F77897-42	**Date Sampled:**	11/07/10
Matrix:	SO - Soil	**Date Received:**	11/09/10
		Percent Solids:	91.8
Project:	Holloman AFB; Alamogordo, NM		

General Chemistry

Analyte	Result	RL	Units	DF	Analyzed	By	Method
Ignitability (Flashpoint) [a]	> 200		Deg. F	1	11/10/10 12:30	CP	SW846 1010
Solids, Percent	91.8		%	1	11/09/10	TC	SM19 2540G

(a) Not ignitable

RL = Reporting Limit

Southeast ACCUTEST LABORATORIES

Misc. Forms

Custody Documents and Other Forms

Includes the following where applicable:

- Certification Exceptions
- Chain of Custody

Parameter Certification Exceptions

Job Number: F77897
Account: TETTNOAK Tetra Tech, Inc
Project: Holloman AFB; Alamogordo, NM

The following parameters included in this report are exceptions to NELAC certification.
The certification status of each is indicated below.

Parameter	CAS#	Method	Mat	Certification Status
Freon 113	76-13-1	**SW846 8260B**	AQ	Certified by SOP MS005

F77897

Tetra Tech, Inc.
800 Oak Ridge Turnpike, Ste A-500
Oak Ridge, TN 37830
865/283-9900

CHAIN-OF-CUSTODY

Laboratory Name: **Accutest Laboratories** Address: **4405 Vineland Rd. Suite C-15 Orlando, FL 32811** Contact: **Sue Bell (813/741-3338)**

Project Name Holloman AFB, SS39 | Project Location **Holloman AFB, New Mexico**

Project No. **100-TEN-T93002-1** | Project Contact **Maureen McMyler** | Site Telephone No. **865-621-8754**

Report to: Maureen McMyler 800 Oak Ridge Turnpike 865/535-2030

Bill to: Sheila Hall, 800 Oak Ridge Turnpike 865/283-9900

Project Manager/Supervisor: **Mike Higgins**

Analysis and Method Desired

Item No.	Sample Number	Date	Time	Comp	Grab	Matrix	Sample Description, Location	Number of Containers	VOCs by SW8260B	TPH-GRO by SW8015B	TPH-DRO by 8015BModified	RCRA Metals by SW6010B/ SW7471A	PAHs by SW8270C	TCLP Metals	Notes
1	SS39-DPT-05A	11/6/2010	1320		X	SO	SS39-DPT-05, Depth 4	2			X	X			Outside Drainage Sump Cluster 2
2	SS39-DPT-05B	11/6/2010	1330		X	SO	SS39-DPT-05, Depth 8	2			X	X			Outside Drainage Sump Cluster 2
3	SS39-DPT-05C	11/6/2010	1340		X	SO	SS39-DPT-05, Depth 11	2			X	X			Outside Drainage Sump Cluster 2
4	SS39-DPT-06A	11/6/2010	1355		X	SO	SS39-DPT-06, Depth 4	2			X	X			Outside Drainage Sump Cluster 2
5	SS39-DPT-06B	11/6/2010	1400		X	SO	SS39-DPT-06, Depth 8	2			X	X			Outside Drainage Sump Cluster 2
6	SS39-DPT-06C	11/6/2010	1410		X	SO	SS39-DPT-06, Depth 11	2			X	X			Outside Drainage Sump Cluster 2
7	SS39-DPT-07A	11/6/2010	1425		X	SO	SS39-DPT-07, Depth 4	2			X	X			Outside Drainage Sump Cluster 2
8	SS39-DPT-07B	11/6/2010	1435		X	SO	SS39-DPT-07, Depth 8	2			X	X			Outside Drainage Sump Cluster 2
9	SS39-DPT-07C	11/6/2010	1450		X	SO	SS39-DPT-07, Depth 11	2			X	X			Outside Drainage Sump Cluster 2
10	SS39-DPT-08A	11/6/2010	1510		X	SO	SS39-DPT-08, Depth 4	2			X	X			Outside Drainage Sump Cluster 2
11	SS39-DPT-08B	11/6/2010	1520		X	SO	SS39-DPT-08, Depth 8	2			X	X			Outside Drainage Sump Cluster 2
12	SS39-DPT-08C	11/6/2010	1525		X	SO	SS39-DPT-08, Depth 11	2			X	X			Outside Drainage Sump Cluster 2
13	SS39-DPT-09A	11/6/2010	1540		X	SO	SS39-DPT-09, Depth 4	2			X	X			Outside Drainage Sump Cluster 2
14	SS39-DPT-09B	11/6/2010	1550		X	SO	SS39-DPT-09, Depth 8	2			X	X			Outside Drainage Sump Cluster 2
15	SS39-DPT-09C	11/6/2010	1600		X	SO	SS39-DPT-09, Depth 11	2			X	X			Outside Drainage Sump Cluster 2
16	SS39-DPT-10A	11/6/2010	1610		X	SO	SS39-DPT-10, Depth 4	2			X	X			Outside Drainage Sump Cluster 2
17	SS39-DPT-10B	11/6/2010	1620		X	SO	SS39-DPT-10, Depth 8	2			X	X			Outside Drainage Sump Cluster 2
18	SS39-DPT-10C	11/6/2010	1635		X	SO	SS39-DPT-10, Depth 11	2			X	X			Outside Drainage Sump Cluster 2
19	SS39-DPT-11A	11/7/2010	1550		X	SO	SS39-DPT-11, Depth 4	5	X	X	X	X			Outside Drainage Sump Cluster 1
20	SS39-DPT-11B	11/7/2010	1600		X	SO	SS39-DPT-11, Depth 8	6	X	X	X	X			Outside Drainage Sump Cluster 1
21	SS39-DPT-11C	11/7/2010	1605		X	SO	SS39-DPT-11, Depth 11	5	X	X	X	X			Outside Drainage Sump Cluster 1
22	SS39-DPT-12A	11/7/2010	1615		X	SO	SS39-DPT-12, Depth 4	6	X	X	X	X			Outside Drainage Sump Cluster 1
23	SS39-DPT-12B	11/7/2010	1620		X	SO	SS39-DPT-12, Depth 8	5	X	X	X	X			Outside Drainage Sump Cluster 1
24	SS39-DPT-12C	11/7/2010	1625		X	SO	SS39-DPT-12, Depth 11	5	X	X	X	X			Outside Drainage Sump Cluster 1
25	SS39-DPT-13A	11/7/2010	1640		X	SO	SS39-DPT-13, Depth 4	5	X	X	X	X			Outside Drainage Sump Cluster 1
26	SS39-DPT-13B	11/7/2010	1645		X	SO	SS39-DPT-13, Depth 8	5	X	X	X	X			Outside Drainage Sump Cluster 1
27	SS39-DPT-13C	11/7/2010	1650		X	SO	SS39-DPT-13, Depth 11	5	X	X	X	X			Outside Drainage Sump Cluster 1
28	SS39-DPT-14A	11/7/2010	1700		X	SO	SS39-DPT-14, Depth 4	6	X	X	X	X			Outside Drainage Sump Cluster 1
29	SS39-DPT-14B	11/7/2010	1710		X	SO	SS39-DPT-14, Depth 8	5	X	X	X	X			Outside Drainage Sump Cluster 1
30	SS39-DPT-14C	11/7/2010	1517		X	SO	SS39-DPT-14, Depth 11	6	X	X	X	X			Outside Drainage Sump Cluster 1
31	SS39-DPT-DUP01	11/6/2010	1450		X	SO	SS39-DPT-07, Depth 11	2			X	X			Field Duplicate
32	SS39-DPT-DUP02	11/6/2010	1635		X	SO	SS39-DPT-10, Depth 11	2			X	X			Field Duplicate
33	SS39-DPT-DUP03	11/7/2010	1700		X	SO	SS39-DBT-14, Depth 4	5	X	X	X	X			Field Duplicate
34	SS39-DPT-12C-MS/MSD	11/7/2010	1625		X	SO	SS39-DPT-12, Depth 11	11	X	X	X	X			MS/MSD
34	SS39-TB-11082010-A	11/8/2010	1145		X	WQ	Trip Blank	1	X	X					

4.2 4

F77897: Chain of Custody
Page 1 of 4

36	SS39-TB-11082010-B	11/8/2010	1145		X	WQ	Trip Blank	3	X	X					
39	SS39-TB-11082010-E	11/8/2010	1145		X	WQ	Trip Blank	3	X	X					
40	SD27-DPT-13A	11/5/2010	1310		X	SO	SD27-DPT-13, Depth 7.5	1			X	X	X		
41	SD27-DPT-13B	11/5/2010	1320		X	SO	SD27-DPT-13, Depth 12.5	1			X	X	X		
42	SD27-DPT-13C	11/5/2010	1340		X	SO	SD27-DPT-13, Depth 17.5	1			X	X	X		
43	SD27-ER-11052010	11/5/2010	1700		X	WB	Equipment Rinse Blank	11	3	3	2	1	2		
44	SS39-TCLP-SUMP2	11/6/2010	1830	X		SO	SS39-Sump Cluster 2	1						X	TCLP Pb
45	SS39-TCLP-SUMP1	11/7/2010	1720	X		SO	SS39-Sump Cluster 1	1						X	TCLP Pb
46	SS39-IGN	11/7/2010	1720	X		SO	SS39-Sumps	1							Ignitability

Transfers Relinquished By (Signature)	Date/Time	Transfers Accepted By (Signature)	Date/Time	Special Instructions:
FX	11/08/2010 1145	FX		
		J. Cooper ALFE	11-9-10 09:00	FedEx Airbill No.: 873 054 7112
		Laboratory		Sampler's Signature

TAT: ____ Standard ____ Rush Due: _____ Seals Intact? ____ Y ____ N Received Good Condition ____ Y ____ N ____ Cold

35 36 37 38 39 40 41 42

4.0 3.6 3.8

F77897

F77897: Chain of Custody

Page 2 of 2

ACCUTEST LABORATORIES SAMPLE RECEIPT CONFIRMATION

ACCUTEST'S JOB NUMBER: F77897 CLIENT: TETRA TECH PROJECT: HOLLOMAN AFB SS39

DATE/TIME RECEIVED: 11-9-10 09:00 {MM/DD/YY 24:00} NUMBER OF COOLERS RECEIVED: 3

METHOD OF DELIVERY: (FEDEX) UPS ACCUTEST COURIER GREYHOUND DELIVERY OTHER

AIRBILL NUMBERS:

COOLER INFORMATION

- [ ] CUSTODY SEAL NOT PRESENT OR NOT INTACT
- [ ] CHAIN OF CUSTODY NOT RECEIVED (COC)
- [ ] ANALYSIS REQUESTED IS UNCLEAR OR MISSING
- [ ] SAMPLE DATES OR TIMES UNCLEAR OR MISSING
- [ ] TEMPERATURE CRITERIA NOT MET
- [ ] WET ICE PRESENT

TRIP BLANK INFORMATION

- [x] TRIP BLANK PROVIDED
- [ ] TRIP BLANK NOT PROVIDED
- [ ] TRIP BLANK NOT ON COC
- [x] TRIP BLANK INTACT
- [ ] TRIP BLANK NOT INTACT
- [x] RECEIVED WATER TRIP BLANK
- [x] RECEIVED SOIL TRIP BLANK

MISC. INFORMATION

NUMBER OF ENCORES ?

NUMBER OF 5035 FIELD KITS ?

NUMBER OR LAB FILTERED METALS ?

TEMPERATURE INFORMATION

- [ ] IR THERM ID 1 CORR. FACTOR -0.2
- [ ] OBSERVED TEMPS: 4.2 3.8 4.0
- [ ] CORRECTED TEMPS: 4.0 3.6 3.8

SAMPLE INFORMATION

- [ ] SAMPLE LABELS PRESENT ON ALL BOTTLES
- [ ] INCORRECT NUMBER OF CONTAINERS USED
- [ ] SAMPLE RECEIVED IMPROPERLY PRESERVED
- [ ] INSUFFICIENT VOLUME FOR ANALYSIS
- [ ] DATES/TIMES ON COC DO NOT MATCH SAMPLE LABEL
- [ ] ID'S ON COC DO NOT MATCH LABEL
- [ ] VOC VIALS HAVE HEADSPACE (MACRO BUBBLES)
- [ ] BOTTLES RECEIVED BUT ANALYSIS NOT REQUESTED
- [ ] NO BOTTLES RECEIVED FOR ANALYSIS REQUESTED
- [ ] UNCLEAR FILTERING OR COMPOSITING INSTRUCTIONS
- [ ] SAMPLE CONTAINER(S) RECEIVED BROKEN
- [ ] % SOLIDS JAR NOT RECEIVED
- [ ] 5035 FIELD KIT FROZEN WITHIN 48 HOUR'S
- [ ] RESIDUAL CHLORINE PRESENT

{APPICABLE TO EPA 600 SERIES OR NORTH CAROLINA ORGANICS}

SUMMARY OF COMMENTS: NOT RECEIVED TB (D)

TECHNICIAN SIGNATURE/DATE JC 11-9-10 REVIEWER SIGNATURE/DATE FT 11.09.10

NF 10/09 RECEIPT CONFIRMATION 100609 (2).xls

4.2

4

F77897: Chain of Custody

Page 3 of 4

Job Change Order: F77897_11/11/2010

Requested Date:	11/11/2010	**Received Date:**	11/9/2010
Account Name:	Tetra Tech, Inc	**Due Date:**	11/23/2010
Project Description:	Holloman AFB; Alamogordo, NM	**Deliverable:**	REDT1
CSR:	SB	**TAT (Days):**	14

Sample #: F77897-all GRO and VOCs (except -39)

Change: Per Valerie Bogle at Tetra Tec via e-mail 11.11.10, cancel all GROs and VOCs. Please do NOT cancel -39.

Sample #: F77897-39

Change: Per Valerie Bogle at Tetra Tec via e-mail 11.11.10, run this for all tests per COC, VOCs and GRO too.

SD27-ER-11052010

Above Changes Valerie Bogle at Tetra Tech **Date:** 11/11/2010

To Client: This Change Order is confirmation of the revisions, previously discussed with the Accutest Client Service Representative.

Page 1 of 1

Southeast ACCUTEST LABORATORIES

GC/MS Volatiles

QC Data Summaries

Includes the following where applicable:

- Method Blank Summaries
- Blank Spike Summaries
- Matrix Spike and Duplicate Summaries
- Instrument Performance Checks (BFB)
- Internal Standard Area Summaries
- Surrogate Recovery Summaries
- Initial and Continuing Calibration Summaries

Method Blank Summary

Job Number: F77897
Account: TETTNOAK Tetra Tech, Inc
Project: Holloman AFB; Alamogordo, NM

Sample	File ID	DF	Analyzed	By	Prep Date	Prep Batch	Analytical Batch
VC2986-MB	C074944.D	1	11/18/10	AJ	n/a	n/a	VC2986

The QC reported here applies to the following samples: **Method:** SW846 8260B

F77897-39

CAS No.	Compound	Result	RL	MDL	Units	Q
67-64-1	Acetone	ND	25	10	ug/l	
107-02-8	Acrolein	ND	20	5.0	ug/l	
107-13-1	Acrylonitrile	ND	10	3.0	ug/l	
71-43-2	Benzene	ND	1.0	0.20	ug/l	
100-44-7	Benzyl Chloride	ND	2.0	0.50	ug/l	
108-86-1	Bromobenzene	ND	1.0	0.25	ug/l	
74-97-5	Bromochloromethane	ND	1.0	0.22	ug/l	
75-27-4	Bromodichloromethane	ND	1.0	0.20	ug/l	
75-25-2	Bromoform	ND	1.0	0.20	ug/l	
104-51-8	n-Butylbenzene	ND	1.0	0.26	ug/l	
135-98-8	sec-Butylbenzene	ND	1.0	0.22	ug/l	
98-06-6	tert-Butylbenzene	ND	1.0	0.27	ug/l	
108-90-7	Chlorobenzene	ND	1.0	0.20	ug/l	
75-00-3	Chloroethane	ND	2.0	0.50	ug/l	
67-66-3	Chloroform	ND	1.0	0.22	ug/l	
544-10-5	1-Chlorohexane	ND	2.0	0.25	ug/l	
95-49-8	o-Chlorotoluene	ND	1.0	0.22	ug/l	
106-43-4	p-Chlorotoluene	ND	1.0	0.20	ug/l	
110-75-8	2-Chloroethyl vinyl ether	ND	5.0	1.2	ug/l	
75-15-0	Carbon disulfide	ND	2.0	0.50	ug/l	
56-23-5	Carbon tetrachloride	ND	1.0	0.25	ug/l	
75-34-3	1,1-Dichloroethane	ND	1.0	0.25	ug/l	
75-35-4	1,1-Dichloroethylene	ND	1.0	0.23	ug/l	
563-58-6	1,1-Dichloropropene	ND	1.0	0.28	ug/l	
96-12-8	1,2-Dibromo-3-chloropropane	ND	2.0	0.50	ug/l	
106-93-4	1,2-Dibromoethane	ND	1.0	0.37	ug/l	
107-06-2	1,2-Dichloroethane	ND	1.0	0.20	ug/l	
78-87-5	1,2-Dichloropropane	ND	1.0	0.25	ug/l	
142-28-9	1,3-Dichloropropane	ND	1.0	0.20	ug/l	
594-20-7	2,2-Dichloropropane	ND	1.0	0.44	ug/l	
124-48-1	Dibromochloromethane	ND	1.0	0.20	ug/l	
75-71-8	Dichlorodifluoromethane	ND	2.0	0.50	ug/l	
156-59-2	cis-1,2-Dichloroethylene	ND	1.0	0.26	ug/l	
10061-01-5	cis-1,3-Dichloropropene	ND	1.0	0.20	ug/l	
541-73-1	m-Dichlorobenzene	ND	1.0	0.20	ug/l	
95-50-1	o-Dichlorobenzene	ND	1.0	0.25	ug/l	

Method Blank Summary

Job Number: F77897
Account: TETTNOAK Tetra Tech, Inc
Project: Holloman AFB; Alamogordo, NM

Sample	File ID	DF	Analyzed	By	Prep Date	Prep Batch	Analytical Batch
VC2986-MB	C074944.D	1	11/18/10	AJ	n/a	n/a	VC2986

The QC reported here applies to the following samples: **Method:** SW846 8260B

F77897-39

CAS No.	Compound	Result	RL	MDL	Units	Q
106-46-7	p-Dichlorobenzene	ND	1.0	0.23	ug/l	
156-60-5	trans-1,2-Dichloroethylene	ND	1.0	0.35	ug/l	
10061-02-6	trans-1,3-Dichloropropene	ND	1.0	0.20	ug/l	
100-41-4	Ethylbenzene	ND	1.0	0.20	ug/l	
76-13-1	Freon 113	ND	1.0	0.47	ug/l	
591-78-6	2-Hexanone	ND	10	4.0	ug/l	
87-68-3	Hexachlorobutadiene	ND	2.0	0.80	ug/l	
110-54-3	Hexane	ND	2.0	0.59	ug/l	
98-82-8	Isopropylbenzene	ND	1.0	0.20	ug/l	
99-87-6	p-Isopropyltoluene	ND	1.0	0.21	ug/l	
108-10-1	4-Methyl-2-pentanone	ND	5.0	2.0	ug/l	
74-83-9	Methyl bromide	ND	2.0	0.50	ug/l	
74-87-3	Methyl chloride	ND	2.0	0.50	ug/l	
74-88-4	Methyl iodide	ND	1.0	0.20	ug/l	
74-95-3	Methylene bromide	ND	2.0	0.25	ug/l	
75-09-2	Methylene chloride	ND	5.0	2.0	ug/l	
78-93-3	Methyl ethyl ketone	ND	5.0	2.0	ug/l	
1634-04-4	Methyl Tert Butyl Ether	ND	1.0	0.34	ug/l	
91-20-3	Naphthalene	ND	5.0	1.0	ug/l	
103-65-1	n-Propylbenzene	ND	1.0	0.20	ug/l	
100-42-5	Styrene	ND	1.0	0.20	ug/l	
630-20-6	1,1,1,2-Tetrachloroethane	ND	1.0	0.20	ug/l	
71-55-6	1,1,1-Trichloroethane	ND	1.0	0.20	ug/l	
79-34-5	1,1,2,2-Tetrachloroethane	ND	1.0	0.23	ug/l	
79-00-5	1,1,2-Trichloroethane	ND	1.0	0.22	ug/l	
87-61-6	1,2,3-Trichlorobenzene	ND	1.0	0.50	ug/l	
96-18-4	1,2,3-Trichloropropane	ND	2.0	0.30	ug/l	
120-82-1	1,2,4-Trichlorobenzene	ND	1.0	0.50	ug/l	
95-63-6	1,2,4-Trimethylbenzene	ND	2.0	0.27	ug/l	
108-67-8	1,3,5-Trimethylbenzene	ND	2.0	0.21	ug/l	
127-18-4	Tetrachloroethylene	ND	1.0	0.25	ug/l	
108-88-3	Toluene	ND	1.0	0.20	ug/l	
79-01-6	Trichloroethylene	ND	1.0	0.26	ug/l	
75-69-4	Trichlorofluoromethane	ND	2.0	0.50	ug/l	
110-57-6	Trans-1,4-Dichloro-2-Butene	ND	10	2.0	ug/l	
75-01-4	Vinyl chloride	ND	1.0	0.22	ug/l	

Method Blank Summary

Job Number: F77897
Account: TETTNOAK Tetra Tech, Inc
Project: Holloman AFB; Alamogordo, NM

Sample	File ID	DF	Analyzed	By	Prep Date	Prep Batch	Analytical Batch
VC2986-MB	C074944.D	1	11/18/10	AJ	n/a	n/a	VC2986

The QC reported here applies to the following samples: **Method:** SW846 8260B

F77897-39

CAS No.	Compound	Result	RL	MDL	Units	Q
108-05-4	Vinyl Acetate	ND	10	2.0	ug/l	
	m,p-Xylene	ND	2.0	0.32	ug/l	
95-47-6	o-Xylene	ND	1.0	0.20	ug/l	

CAS No.	Surrogate Recoveries		Limits
1868-53-7	Dibromofluoromethane	108%	87-116%
17060-07-0	1,2-Dichloroethane-D4	110%	76-127%
2037-26-5	Toluene-D8	97%	86-112%
460-00-4	4-Bromofluorobenzene	105%	84-120%

Method Blank Summary

Job Number: F77897
Account: TETTNOAK Tetra Tech, Inc
Project: Holloman AFB; Alamogordo, NM

Sample	File ID	DF	Analyzed	By	Prep Date	Prep Batch	Analytical Batch
VF1348-MB	F046025.D	1	11/23/10	SH	n/a	n/a	VF1348

The QC reported here applies to the following samples: **Method:** SW846 8260B

F77897-39

CAS No.	Compound	Result	RL	MDL	Units	Q
75-05-8	Acetonitrile	ND	20	5.0	ug/l	
107-05-1	Allyl chloride	ND	2.0	0.30	ug/l	
1476-11-5	cis-1,4-Dichloro-2-Butene	ND	10	1.0	ug/l	
97-63-2	Ethyl methacrylate	ND	5.0	1.0	ug/l	
126-98-7	Methacrylonitrile	ND	20	5.0	ug/l	
80-62-6	Methyl methacrylate	ND	5.0	1.0	ug/l	
76-01-7	Pentachloroethane	ND	10	2.0	ug/l	
107-12-0	Propionitrile	ND	20	5.0	ug/l	

CAS No.	Surrogate Recoveries		Limits
1868-53-7	Dibromofluoromethane	106%	87-116%
17060-07-0	1,2-Dichloroethane-D4	96%	76-127%
2037-26-5	Toluene-D8	100%	86-112%
460-00-4	4-Bromofluorobenzene	93%	84-120%

Blank Spike Summary

Job Number: F77897
Account: TETTNOAK Tetra Tech, Inc
Project: Holloman AFB; Alamogordo, NM

Sample	File ID	DF	Analyzed	By	Prep Date	Prep Batch	Analytical Batch
VC2986-BS	C074943.D	1	11/18/10	AJ	n/a	n/a	VC2986

The QC reported here applies to the following samples: **Method:** SW846 8260B

F77897-39

CAS No.	Compound	Spike ug/l	BSP ug/l	BSP %	Limits
67-64-1	Acetone	125	181	145*	59-134
107-02-8	Acrolein	125	86.0	69	33-157
107-13-1	Acrylonitrile	125	114	91	62-124
71-43-2	Benzene	25	26.4	106	83-124
100-44-7	Benzyl Chloride	25	24.7	99	61-118
108-86-1	Bromobenzene	25	24.1	96	83-115
74-97-5	Bromochloromethane	25	25.6	102	78-112
75-27-4	Bromodichloromethane	25	27.7	111	76-116
75-25-2	Bromoform	25	23.0	92	68-128
104-51-8	n-Butylbenzene	25	26.3	105	84-124
135-98-8	sec-Butylbenzene	25	25.9	104	86-127
98-06-6	tert-Butylbenzene	25	26.9	108	83-126
108-90-7	Chlorobenzene	25	25.6	102	87-115
75-00-3	Chloroethane	25	33.7	135	54-166
67-66-3	Chloroform	25	28.2	113	85-123
544-10-5	1-Chlorohexane	25	25.9	104	87-128
95-49-8	o-Chlorotoluene	25	25.6	102	84-121
106-43-4	p-Chlorotoluene	25	25.3	101	84-120
110-75-8	2-Chloroethyl vinyl ether	125	141	113	63-125
75-15-0	Carbon disulfide	25	29.8	119	67-147
56-23-5	Carbon tetrachloride	25	30.0	120	74-139
75-34-3	1,1-Dichloroethane	25	27.7	111	82-127
75-35-4	1,1-Dichloroethylene	25	31.2	125	75-133
563-58-6	1,1-Dichloropropene	25	29.2	117	87-127
96-12-8	1,2-Dibromo-3-chloropropane	25	22.9	92	61-118
106-93-4	1,2-Dibromoethane	25	23.6	94	80-115
107-06-2	1,2-Dichloroethane	25	28.5	114	76-122
78-87-5	1,2-Dichloropropane	25	26.1	104	81-120
142-28-9	1,3-Dichloropropane	25	24.0	96	81-113
594-20-7	2,2-Dichloropropane	25	30.1	120	77-138
124-48-1	Dibromochloromethane	25	25.0	100	74-116
75-71-8	Dichlorodifluoromethane	25	42.5	170*	34-158
156-59-2	cis-1,2-Dichloroethylene	25	27.3	109	81-114
10061-01-5	cis-1,3-Dichloropropene	25	27.7	111	83-119
541-73-1	m-Dichlorobenzene	25	24.4	98	86-115
95-50-1	o-Dichlorobenzene	25	24.6	98	85-115

Blank Spike Summary

Job Number: F77897
Account: TETTNOAK Tetra Tech, Inc
Project: Holloman AFB; Alamogordo, NM

Sample	File ID	DF	Analyzed	By	Prep Date	Prep Batch	Analytical Batch
VC2986-BS	C074943.D	1	11/18/10	AJ	n/a	n/a	VC2986

The QC reported here applies to the following samples: **Method:** SW846 8260B

F77897-39

CAS No.	Compound	Spike ug/l	BSP ug/l	BSP %	Limits
106-46-7	p-Dichlorobenzene	25	24.2	97	87-113
156-60-5	trans-1,2-Dichloroethylene	25	29.1	116	82-126
10061-02-6	trans-1,3-Dichloropropene	25	27.1	108	87-123
100-41-4	Ethylbenzene	25	26.0	104	87-118
76-13-1	Freon 113	25	33.0	132	74-139
591-78-6	2-Hexanone	125	138	110	58-125
87-68-3	Hexachlorobutadiene	25	27.1	108	71-133
110-54-3	Hexane	25	30.8	123	71-134
98-82-8	Isopropylbenzene	25	26.8	107	87-131
99-87-6	p-Isopropyltoluene	25	26.4	106	83-125
108-10-1	4-Methyl-2-pentanone	125	125	100	62-125
74-83-9	Methyl bromide	25	33.1	132	55-151
74-87-3	Methyl chloride	25	35.7	143	55-173
74-88-4	Methyl iodide	25	30.7	123	72-125
74-95-3	Methylene bromide	25	26.5	106	81-116
75-09-2	Methylene chloride	25	25.3	101	69-125
78-93-3	Methyl ethyl ketone	125	149	119	61-127
1634-04-4	Methyl Tert Butyl Ether	25	27.6	110	75-116
91-20-3	Naphthalene	25	24.4	98	59-125
103-65-1	n-Propylbenzene	25	26.0	104	86-125
100-42-5	Styrene	25	21.8	87	78-118
630-20-6	1,1,1,2-Tetrachloroethane	25	25.0	100	81-119
71-55-6	1,1,1-Trichloroethane	25	29.5	118	79-133
79-34-5	1,1,2,2-Tetrachloroethane	25	22.4	90	71-120
79-00-5	1,1,2-Trichloroethane	25	23.8	95	80-114
87-61-6	1,2,3-Trichlorobenzene	25	25.2	101	64-126
96-18-4	1,2,3-Trichloropropane	25	21.0	84	77-115
120-82-1	1,2,4-Trichlorobenzene	25	25.4	102	68-123
95-63-6	1,2,4-Trimethylbenzene	25	25.6	102	82-120
108-67-8	1,3,5-Trimethylbenzene	25	26.0	104	83-123
127-18-4	Tetrachloroethylene	25	26.1	104	80-131
108-88-3	Toluene	25	25.0	100	86-116
79-01-6	Trichloroethylene	25	28.0	112	85-124
75-69-4	Trichlorofluoromethane	25	34.8	139	66-156
110-57-6	Trans-1,4-Dichloro-2-Butene	25	14.8	59	51-137
75-01-4	Vinyl chloride	25	30.6	122	57-153

Blank Spike Summary

Job Number: F77897
Account: TETTNOAK Tetra Tech, Inc
Project: Holloman AFB; Alamogordo, NM

Sample	File ID	DF	Analyzed	By	Prep Date	Prep Batch	Analytical Batch
VC2986-BS	C074943.D	1	11/18/10	AJ	n/a	n/a	VC2986

The QC reported here applies to the following samples: **Method:** SW846 8260B

F77897-39

CAS No.	Compound	Spike ug/l	BSP ug/l	BSP %	Limits
108-05-4	Vinyl Acetate	125	120	96	38-159
	m,p-Xylene	50	53.3	107	86-121
95-47-6	o-Xylene	25	26.2	105	83-121

CAS No.	Surrogate Recoveries	BSP	Limits
1868-53-7	Dibromofluoromethane	107%	87-116%
17060-07-0	1,2-Dichloroethane-D4	111%	76-127%
2037-26-5	Toluene-D8	96%	86-112%
460-00-4	4-Bromofluorobenzene	100%	84-120%

Blank Spike Summary

Job Number: F77897
Account: TETTNOAK Tetra Tech, Inc
Project: Holloman AFB; Alamogordo, NM

Sample	File ID	DF	Analyzed	By	Prep Date	Prep Batch	Analytical Batch
VF1348-BS	F046024.D	1	11/23/10	SH	n/a	n/a	VF1348

The QC reported here applies to the following samples: **Method:** SW846 8260B

F77897-39

CAS No.	Compound	Spike ug/l	BSP ug/l	BSP %	Limits
75-05-8	Acetonitrile	250	221	88	57-123
107-05-1	Allyl chloride	25	23.0	92	48-136
1476-11-5	cis-1,4-Dichloro-2-Butene	25	38.1	152*	41-130
97-63-2	Ethyl methacrylate	25	21.4	86	68-110
126-98-7	Methacrylonitrile	250	228	91	62-133
80-62-6	Methyl methacrylate	25	20.9	84	63-115
76-01-7	Pentachloroethane	25	24.6	98	82-111
107-12-0	Propionitrile	250	208	83	69-119

CAS No.	Surrogate Recoveries	BSP	Limits
1868-53-7	Dibromofluoromethane	99%	87-116%
17060-07-0	1,2-Dichloroethane-D4	103%	76-127%
2037-26-5	Toluene-D8	99%	86-112%
460-00-4	4-Bromofluorobenzene	92%	84-120%

Matrix Spike/Matrix Spike Duplicate Summary

Job Number: F77897
Account: TETTNOAK Tetra Tech, Inc
Project: Holloman AFB; Alamogordo, NM

Sample	File ID	DF	Analyzed	By	Prep Date	Prep Batch	Analytical Batch
F77883-24MS	C074956.D	1	11/18/10	AJ	n/a	n/a	VC2986
F77883-24MSD	C074957.D	1	11/18/10	AJ	n/a	n/a	VC2986
F77883-24	C074950.D	1	11/18/10	AJ	n/a	n/a	VC2986

The QC reported here applies to the following samples: **Method:** SW846 8260B

F77897-39

CAS No.	Compound	F77883-24 ug/l	Q	Spike ug/l	MS ug/l	MS %	MSD ug/l	MSD %	RPD	Limits Rec/RPD
67-64-1	Acetone	25 U		125	129	103	116	93	11	59-134/14
107-02-8	Acrolein	20 U		125	85.2	68	89.8	72	5	33-157/21
107-13-1	Acrylonitrile	10 U		125	122	98	121	97	1	62-124/13
71-43-2	Benzene	1.0 U		25	27.7	111	27.0	108	3	83-124/11
100-44-7	Benzyl Chloride	2.0 U		25	24.1	96	23.6	94	2	61-118/12
108-86-1	Bromobenzene	1.0 U		25	24.9	100	24.7	99	1	83-115/10
74-97-5	Bromochloromethane	1.0 U		25	27.4	110	27.0	108	1	78-112/10
75-27-4	Bromodichloromethane	1.0 U		25	29.9	120*	29.8	119*	0	76-116/10
75-25-2	Bromoform	1.0 U		25	24.1	96	24.2	97	0	68-128/11
104-51-8	n-Butylbenzene	1.0 U		25	26.4	106	25.9	104	2	84-124/10
135-98-8	sec-Butylbenzene	1.0 U		25	26.6	106	25.9	104	3	86-127/10
98-06-6	tert-Butylbenzene	1.0 U		25	28.0	112	27.4	110	2	83-126/10
108-90-7	Chlorobenzene	1.0 U		25	26.7	107	26.2	105	2	87-115/9
75-00-3	Chloroethane	2.0 U		25	34.1	136	34.7	139	2	54-166/20
67-66-3	Chloroform	1.0 U		25	30.8	123	30.2	121	2	85-123/10
544-10-5	1-Chlorohexane	2.0 U		25	26.4	106	25.8	103	2	87-128/10
95-49-8	o-Chlorotoluene	1.0 U		25	26.8	107	26.5	106	1	84-121/10
106-43-4	p-Chlorotoluene	1.0 U		25	26.1	104	26.2	105	0	84-120/10
110-75-8	2-Chloroethyl vinyl ether	5.0 U		125	ND	0*	ND	0*	nc	63-125/24
75-15-0	Carbon disulfide	1.5	J	25	32.3	123	31.5	120	3	67-147/12
56-23-5	Carbon tetrachloride	1.0 U		25	32.8	131	31.6	126	4	74-139/13
75-34-3	1,1-Dichloroethane	1.3		25	31.2	120	30.2	116	3	82-127/10
75-35-4	1,1-Dichloroethylene	1.0 U		25	34.4	138*	33.7	135*	2	75-133/13
563-58-6	1,1-Dichloropropene	1.0 U		25	31.0	124	29.8	119	4	87-127/10
96-12-8	1,2-Dibromo-3-chloropropane	2.0 U		25	24.2	97	24.4	98	1	61-118/15
106-93-4	1,2-Dibromoethane	1.0 U		25	24.6	98	24.6	98	0	80-115/10
107-06-2	1,2-Dichloroethane	1.0 U		25	32.0	128*	31.7	127*	1	76-122/11
78-87-5	1,2-Dichloropropane	1.0 U		25	27.7	111	27.3	109	1	81-120/11
142-28-9	1,3-Dichloropropane	1.0 U		25	25.1	100	25.2	101	0	81-113/11
594-20-7	2,2-Dichloropropane	1.0 U		25	32.6	130	31.4	126	4	77-138/12
124-48-1	Dibromochloromethane	1.0 U		25	25.7	103	26.0	104	1	74-116/11
75-71-8	Dichlorodifluoromethane	2.0 U		25	40.4	162*	41.1	164*	2	34-158/22
156-59-2	cis-1,2-Dichloroethylene	0.60	J	25	29.1	114	28.1	110	3	81-114/10
10061-01-5	cis-1,3-Dichloropropene	1.0 U		25	27.0	108	27.0	108	0	83-119/10
541-73-1	m-Dichlorobenzene	1.0 U		25	24.9	100	24.7	99	1	86-115/9
95-50-1	o-Dichlorobenzene	1.0 U		25	24.7	99	24.6	98	0	85-115/9

Matrix Spike/Matrix Spike Duplicate Summary

Job Number: F77897
Account: TETTNOAK Tetra Tech, Inc
Project: Holloman AFB; Alamogordo, NM

Sample	File ID	DF	Analyzed	By	Prep Date	Prep Batch	Analytical Batch
F77883-24MS	C074956.D	1	11/18/10	AJ	n/a	n/a	VC2986
F77883-24MSD	C074957.D	1	11/18/10	AJ	n/a	n/a	VC2986
F77883-24	C074950.D	1	11/18/10	AJ	n/a	n/a	VC2986

The QC reported here applies to the following samples: **Method:** SW846 8260B

F77897-39

CAS No.	Compound	F77883-24 ug/l	Q	Spike ug/l	MS ug/l	MS %	MSD ug/l	MSD %	RPD	Limits Rec/RPD
106-46-7	p-Dichlorobenzene	1.0 U		25	25.1	100	24.8	99	1	87-113/10
156-60-5	trans-1,2-Dichloroethylene	1.0 U		25	31.5	126	30.6	122	3	82-126/10
10061-02-6	trans-1,3-Dichloropropene	1.0 U		25	27.9	112	28.2	113	1	87-123/10
100-41-4	Ethylbenzene	1.0 U		25	27.1	108	26.4	106	3	87-118/10
76-13-1	Freon 113	1.0 U		25	34.9	140*	34.5	138	1	74-139/13
591-78-6	2-Hexanone	10 U		125	138	110	138	110	0	58-125/14
87-68-3	Hexachlorobutadiene	2.0 U		25	24.8	99	24.8	99	0	71-133/12
110-54-3	Hexane	2.0 U		25	33.5	134	32.1	128	4	71-134/11
98-82-8	Isopropylbenzene	1.0 U		25	28.0	112	27.2	109	3	87-131/10
99-87-6	p-Isopropyltoluene	1.0 U		25	26.9	108	26.5	106	1	83-125/9
108-10-1	4-Methyl-2-pentanone	5.0 U		125	144	115	142	114	1	62-125/13
74-83-9	Methyl bromide	2.0 U		25	32.8	131	33.2	133	1	55-151/21
74-87-3	Methyl chloride	2.0 U		25	34.5	138	35.4	142	3	55-173/22
74-88-4	Methyl iodide	1.0 U		25	32.0	128*	32.1	128*	0	72-125/11
74-95-3	Methylene bromide	2.0 U		25	28.6	114	28.4	114	1	81-116/10
75-09-2	Methylene chloride	5.0 U		25	29.7	119	27.6	110	7	69-125/11
78-93-3	Methyl ethyl ketone	5.0 U		125	135	108	134	107	1	61-127/13
1634-04-4	Methyl Tert Butyl Ether	1.0 U		25	29.4	118*	29.8	119*	1	75-116/10
91-20-3	Naphthalene	5.0 U		25	24.2	97	24.8	99	2	59-125/15
103-65-1	n-Propylbenzene	1.0 U		25	26.9	108	26.4	106	2	86-125/10
100-42-5	Styrene	1.0 U		25	22.8	91	22.4	90	2	78-118/11
630-20-6	1,1,1,2-Tetrachloroethane	1.0 U		25	26.6	106	26.1	104	2	81-119/10
71-55-6	1,1,1-Trichloroethane	1.0 U		25	32.4	130	31.4	126	3	79-133/11
79-34-5	1,1,2,2-Tetrachloroethane	1.0 U		25	24.4	98	24.1	96	1	71-120/11
79-00-5	1,1,2-Trichloroethane	1.0 U		25	24.5	98	24.6	98	0	80-114/11
87-61-6	1,2,3-Trichlorobenzene	1.0 U		25	23.8	95	24.1	96	1	64-126/16
96-18-4	1,2,3-Trichloropropane	2.0 U		25	23.1	92	23.1	92	0	77-115/12
120-82-1	1,2,4-Trichlorobenzene	1.0 U		25	23.9	96	24.2	97	1	68-123/11
95-63-6	1,2,4-Trimethylbenzene	2.0 U		25	26.7	107	26.3	105	2	82-120/10
108-67-8	1,3,5-Trimethylbenzene	2.0 U		25	27.1	108	26.8	107	1	83-123/10
127-18-4	Tetrachloroethylene	1.0 U		25	26.6	106	26.3	105	1	80-131/12
108-88-3	Toluene	1.0 U		25	25.5	102	25.0	100	2	86-116/10
79-01-6	Trichloroethylene	1.0 U		25	29.8	119	29.0	116	3	85-124/10
75-69-4	Trichlorofluoromethane	2.0 U		25	36.0	144	35.4	142	2	66-156/15
110-57-6	Trans-1,4-Dichloro-2-Butene	10 U		25	3.8	15*	4.8	19*	23	51-137/24
75-01-4	Vinyl chloride	1.0 U		25	29.8	119	30.4	122	2	57-153/22

Matrix Spike/Matrix Spike Duplicate Summary

Job Number: F77897
Account: TETTNOAK Tetra Tech, Inc
Project: Holloman AFB; Alamogordo, NM

Sample	File ID	DF	Analyzed	By	Prep Date	Prep Batch	Analytical Batch
F77883-24MS	C074956.D	1	11/18/10	AJ	n/a	n/a	VC2986
F77883-24MSD	C074957.D	1	11/18/10	AJ	n/a	n/a	VC2986
F77883-24	C074950.D	1	11/18/10	AJ	n/a	n/a	VC2986

The QC reported here applies to the following samples: **Method:** SW846 8260B

F77897-39

CAS No.	Compound	F77883-24 ug/l	Q	Spike ug/l	MS ug/l	MS %	MSD ug/l	MSD %	RPD	Limits Rec/RPD
108-05-4	Vinyl Acetate	10	U	125	127	102	125	100	2	38-159/11
	m,p-Xylene	2.0	U	50	56.1	112	55.6	111	1	86-121/10
95-47-6	o-Xylene	1.0	U	25	27.3	109	27.0	108	1	83-121/10

CAS No.	Surrogate Recoveries	MS	MSD	F77883-24	Limits
1868-53-7	Dibromofluoromethane	112%	110%	114%	87-116%
17060-07-0	1,2-Dichloroethane-D4	119%	117%	119%	76-127%
2037-26-5	Toluene-D8	93%	94%	98%	86-112%
460-00-4	4-Bromofluorobenzene	99%	102%	107%	84-120%

Matrix Spike/Matrix Spike Duplicate Summary

Job Number: F77897
Account: TETTNOAK Tetra Tech, Inc
Project: Holloman AFB; Alamogordo, NM

Sample	File ID	DF	Analyzed	By	Prep Date	Prep Batch	Analytical Batch
F78101-29MS	F046034.D	100	11/23/10	SH	n/a	n/a	VF1348
F78101-29MSD	F046035.D	100	11/23/10	SH	n/a	n/a	VF1348
F78101-29 [a]	F046026.D	100	11/23/10	SH	n/a	n/a	VF1348

The QC reported here applies to the following samples: **Method:** SW846 8260B

F77897-39

CAS No.	Compound	F78101-29 ug/l	Q	Spike ug/l	MS ug/l	MS %	MSD ug/l	MSD %	RPD	Limits Rec/RPD
75-05-8	Acetonitrile	ND		25000	17000	68	31500	126*	60*	57-123/15
107-05-1	Allyl chloride	ND		2500	2200	88	2000	80	10	48-136/13
1476-11-5	cis-1,4-Dichloro-2-Butene	ND		2500	2720	109	3310	132*	20	41-130/33
97-63-2	Ethyl methacrylate	ND		2500	1840	74	2110	84	14*	68-110/11
126-98-7	Methacrylonitrile	ND		25000	19800	79	23300	93	16	62-133/17
80-62-6	Methyl methacrylate	ND		2500	1790	72	2080	83	15*	63-115/10
76-01-7	Pentachloroethane	ND		2500	2430	97	2360	94	3	82-111/8
107-12-0	Propionitrile	ND		25000	16300	65*	20700	83	24*	69-119/12

CAS No.	Surrogate Recoveries	MS	MSD	F78101-29	Limits
1868-53-7	Dibromofluoromethane	105%	102%	104%	87-116%
17060-07-0	1,2-Dichloroethane-D4	92%	98%	93%	76-127%
2037-26-5	Toluene-D8	95%	98%	99%	86-112%
460-00-4	4-Bromofluorobenzene	90%	95%	94%	84-120%

(a) Sample vial(s) contained significant headspace; reported results are considered minimum values.

Instrument Performance Check (BFB)

Job Number: F77897
Account: TETTNOAK Tetra Tech, Inc
Project: Holloman AFB; Alamogordo, NM

Sample: VC2982-BFB
Lab File ID: C074838.D
Instrument ID: GCMSC
Injection Date: 11/13/10
Injection Time: 12:01

m/e	Ion Abundance Criteria	Raw Abundance	% Relative Abundance		Pass/Fail
50	15.0 - 40.0% of mass 95	30472	17.8		Pass
75	30.0 - 60.0% of mass 95	84968	49.7		Pass
95	Base peak, 100% relative abundance	170816	100.0		Pass
96	5.0 - 9.0% of mass 95	11647	6.82		Pass
173	Less than 2.0% of mass 174	538	0.31	(0.37) [a]	Pass
174	50.0 - 100.0% of mass 95	145237	85.0		Pass
175	5.0 - 9.0% of mass 174	10271	6.01	(7.07) [a]	Pass
176	95.0 - 101.0% of mass 174	140064	82.0	(96.4) [a]	Pass
177	5.0 - 9.0% of mass 176	8972	5.25	(6.41) [b]	Pass

(a) Value is % of mass 174
(b) Value is % of mass 176

This check applies to the following Samples, MS, MSD, Blanks, and Standards:

Lab Sample ID	Lab File ID	Date Analyzed	Time Analyzed	Hours Lapsed	Client Sample ID
VC2982-IC2982	C074839.D	11/13/10	12:24	00:23	Initial cal 1
VC2982-IC2982	C074840.D	11/13/10	12:49	00:48	Initial cal 2
VC2982-IC2982	C074841.D	11/13/10	13:13	01:12	Initial cal 3
VC2982-ICC2982	C074842.D	11/13/10	13:38	01:37	Initial cal 4
VC2982-IC2982	C074843.D	11/13/10	14:03	02:02	Initial cal 5
VC2982-IC2982	C074844.D	11/13/10	14:27	02:26	Initial cal 6
VC2982-ICV2982	C074845.D	11/13/10	14:52	02:51	Initial cal verification 4
VC2982-BS	C074846.D	11/13/10	15:17	03:16	Blank Spike
VC2982-MB	C074848.D	11/13/10	16:07	04:06	Method Blank
ZZZZZZ	C074849.D	11/13/10	16:32	04:31	(unrelated sample)
ZZZZZZ	C074850.D	11/13/10	16:56	04:55	(unrelated sample)
ZZZZZZ	C074851.D	11/13/10	17:21	05:20	(unrelated sample)

Instrument Performance Check (BFB)

Job Number: F77897
Account: TETTNOAK Tetra Tech, Inc
Project: Holloman AFB; Alamogordo, NM

Sample: VC2986-BFB
Lab File ID: C074940.D
Instrument ID: GCMSC
Injection Date: 11/18/10
Injection Time: 08:36

m/e	Ion Abundance Criteria	Raw Abundance	% Relative Abundance		Pass/Fail
50	15.0 - 40.0% of mass 95	24170	20.7		Pass
75	30.0 - 60.0% of mass 95	62869	53.9		Pass
95	Base peak, 100% relative abundance	116610	100.0		Pass
96	5.0 - 9.0% of mass 95	8142	6.98		Pass
173	Less than 2.0% of mass 174	216	0.19	(0.25) [a]	Pass
174	50.0 - 100.0% of mass 95	88074	75.5		Pass
175	5.0 - 9.0% of mass 174	6385	5.48	(7.25) [a]	Pass
176	95.0 - 101.0% of mass 174	85632	73.4	(97.2) [a]	Pass
177	5.0 - 9.0% of mass 176	5879	5.04	(6.87) [b]	Pass

(a) Value is % of mass 174
(b) Value is % of mass 176

This check applies to the following Samples, MS, MSD, Blanks, and Standards:

Lab Sample ID	Lab File ID	Date Analyzed	Time Analyzed	Hours Lapsed	Client Sample ID
VC2986-CC2982	C074942.D	11/18/10	09:29	00:53	Continuing cal 4
VC2986-BS	C074943.D	11/18/10	09:56	01:20	Blank Spike
VC2986-MB	C074944.D	11/18/10	10:30	01:54	Method Blank
ZZZZZZ	C074945.D	11/18/10	10:54	02:18	(unrelated sample)
ZZZZZZ	C074946.D	11/18/10	11:19	02:43	(unrelated sample)
ZZZZZZ	C074947.D	11/18/10	11:44	03:08	(unrelated sample)
ZZZZZZ	C074948.D	11/18/10	12:09	03:33	(unrelated sample)
ZZZZZZ	C074949.D	11/18/10	12:34	03:58	(unrelated sample)
F77883-24	C074950.D	11/18/10	12:59	04:23	(used for QC only; not part of job F77897)
F77897-39	C074951.D	11/18/10	13:23	04:47	SD27-ER-11052010
ZZZZZZ	C074952.D	11/18/10	13:48	05:12	(unrelated sample)
ZZZZZZ	C074954.D	11/18/10	14:38	06:02	(unrelated sample)
ZZZZZZ	C074955.D	11/18/10	15:02	06:26	(unrelated sample)
F77883-24MS	C074956.D	11/18/10	15:27	06:51	Matrix Spike
F77883-24MSD	C074957.D	11/18/10	15:52	07:16	Matrix Spike Duplicate
ZZZZZZ	C074958.D	11/18/10	16:17	07:41	(unrelated sample)
ZZZZZZ	C074959.D	11/18/10	16:42	08:06	(unrelated sample)
ZZZZZZ	C074960.D	11/18/10	17:07	08:31	(unrelated sample)
ZZZZZZ	C074961.D	11/18/10	17:31	08:55	(unrelated sample)
ZZZZZZ	C074962.D	11/18/10	17:56	09:20	(unrelated sample)
ZZZZZZ	C074963.D	11/18/10	18:21	09:45	(unrelated sample)
ZZZZZZ	C074964.D	11/18/10	18:46	10:10	(unrelated sample)
ZZZZZZ	C074965.D	11/18/10	19:11	10:35	(unrelated sample)
ZZZZZZ	C074966.D	11/18/10	19:35	10:59	(unrelated sample)

Instrument Performance Check (BFB)

Job Number: F77897
Account: TETTNOAK Tetra Tech, Inc
Project: Holloman AFB; Alamogordo, NM

Sample: VF1347-BFB
Lab File ID: F045992.D
Instrument ID: GCMSF
Injection Date: 11/22/10
Injection Time: 12:44

m/e	Ion Abundance Criteria	Raw Abundance	% Relative Abundance		Pass/Fail
50	15.0 - 40.0% of mass 95	15718	27.3		Pass
75	30.0 - 60.0% of mass 95	27421	47.6		Pass
95	Base peak, 100% relative abundance	57578	100.0		Pass
96	5.0 - 9.0% of mass 95	4241	7.37		Pass
173	Less than 2.0% of mass 174	0	0.00	(0.00) [a]	Pass
174	50.0 - 100.0% of mass 95	42280	73.4		Pass
175	5.0 - 9.0% of mass 174	2750	4.78	(6.50) [a]	Pass
176	95.0 - 101.0% of mass 174	41402	71.9	(97.9) [a]	Pass
177	5.0 - 9.0% of mass 176	2772	4.81	(6.70) [b]	Pass

(a) Value is % of mass 174
(b) Value is % of mass 176

This check applies to the following Samples, MS, MSD, Blanks, and Standards:

Lab Sample ID	Lab File ID	Date Analyzed	Time Analyzed	Hours Lapsed	Client Sample ID
VF1347-IC1347	F045993.D	11/22/10	13:13	00:29	Initial cal 1
VF1347-IC1347	F045994.D	11/22/10	13:38	00:54	Initial cal 2
VF1347-IC1347	F045995.D	11/22/10	14:03	01:19	Initial cal 3
VF1347-ICC1347	F045996.D	11/22/10	14:28	01:44	Initial cal 4
VF1347-IC1347	F045997.D	11/22/10	14:53	02:09	Initial cal 5
VF1347-IC1347	F045998.D	11/22/10	15:18	02:34	Initial cal 6
VF1347-ICV1347	F045999.D	11/22/10	15:44	03:00	Initial cal verification 3
VF1347-BS	F046000.D	11/22/10	16:09	03:25	Blank Spike
VF1347-MB	F046001.D	11/22/10	16:34	03:50	Method Blank
ZZZZZZ	F046002.D	11/22/10	16:59	04:15	(unrelated sample)
ZZZZZZ	F046003.D	11/22/10	17:25	04:41	(unrelated sample)
ZZZZZZ	F046004.D	11/22/10	17:50	05:06	(unrelated sample)
ZZZZZZ	F046005.D	11/22/10	18:15	05:31	(unrelated sample)
ZZZZZZ	F046006.D	11/22/10	18:40	05:56	(unrelated sample)
ZZZZZZ	F046007.D	11/22/10	19:05	06:21	(unrelated sample)
F78101-29	F046008.D	11/22/10	19:30	06:46	(used for QC only; not part of job F77897)
ZZZZZZ	F046009.D	11/22/10	19:55	07:11	(unrelated sample)
ZZZZZZ	F046010.D	11/22/10	20:20	07:36	(unrelated sample)
ZZZZZZ	F046011.D	11/22/10	20:46	08:02	(unrelated sample)
ZZZZZZ	F046012.D	11/22/10	21:11	08:27	(unrelated sample)
ZZZZZZ	F046013.D	11/22/10	21:36	08:52	(unrelated sample)
ZZZZZZ	F046014.D	11/22/10	22:01	09:17	(unrelated sample)
ZZZZZZ	F046015.D	11/22/10	22:26	09:42	(unrelated sample)
ZZZZZZ	F046017.D	11/22/10	23:16	10:32	(unrelated sample)

Instrument Performance Check (BFB)

Job Number: F77897
Account: TETTNOAK Tetra Tech, Inc
Project: Holloman AFB; Alamogordo, NM

Sample: VF1347-BFB
Lab File ID: F045992.D
Instrument ID: GCMSF
Injection Date: 11/22/10
Injection Time: 12:44

Lab Sample ID	Lab File ID	Date Analyzed	Time Analyzed	Hours Lapsed	Client Sample ID
F78101-29MS	F046018.D	11/22/10	23:41	10:57	Matrix Spike
F78101-29MSD	F046019.D	11/23/10	00:06	11:22	Matrix Spike Duplicate

Instrument Performance Check (BFB)

Job Number: F77897
Account: TETTNOAK Tetra Tech, Inc
Project: Holloman AFB; Alamogordo, NM

Sample: VF1348-BFB
Lab File ID: F046022.D
Instrument ID: GCMSF
Injection Date: 11/23/10
Injection Time: 09:16

m/e	Ion Abundance Criteria	Raw Abundance	% Relative Abundance		Pass/Fail
50	15.0 - 40.0% of mass 95	8549	21.4		Pass
75	30.0 - 60.0% of mass 95	18133	45.4		Pass
95	Base peak, 100% relative abundance	39952	100.0		Pass
96	5.0 - 9.0% of mass 95	2604	6.52		Pass
173	Less than 2.0% of mass 174	146	0.37	(0.46) [a]	Pass
174	50.0 - 100.0% of mass 95	31621	79.1		Pass
175	5.0 - 9.0% of mass 174	2385	5.97	(7.54) [a]	Pass
176	95.0 - 101.0% of mass 174	30061	75.2	(95.1) [a]	Pass
177	5.0 - 9.0% of mass 176	1931	4.83	(6.42) [b]	Pass

(a) Value is % of mass 174
(b) Value is % of mass 176

This check applies to the following Samples, MS, MSD, Blanks, and Standards:

Lab Sample ID	Lab File ID	Date Analyzed	Time Analyzed	Hours Lapsed	Client Sample ID
VF1348-CC1347	F046023.D	11/23/10	09:55	00:39	Continuing cal 4
VF1348-BS	F046024.D	11/23/10	10:32	01:16	Blank Spike
VF1348-MB	F046025.D	11/23/10	10:57	01:41	Method Blank
F78101-29	F046026.D	11/23/10	11:22	02:06	(used for QC only; not part of job F77897)
ZZZZZZ	F046028.D	11/23/10	12:13	02:57	(unrelated sample)
ZZZZZZ	F046029.D	11/23/10	12:38	03:22	(unrelated sample)
ZZZZZZ	F046030.D	11/23/10	13:04	03:48	(unrelated sample)
F77897-39	F046031.D	11/23/10	13:29	04:13	SD27-ER-11052010
ZZZZZZ	F046032.D	11/23/10	13:55	04:39	(unrelated sample)
ZZZZZZ	F046033.D	11/23/10	14:21	05:05	(unrelated sample)
F78101-29MS	F046034.D	11/23/10	14:46	05:30	Matrix Spike
F78101-29MSD	F046035.D	11/23/10	15:11	05:55	Matrix Spike Duplicate

Volatile Internal Standard Area Summary

Job Number: F77897
Account: TETTNOAK Tetra Tech, Inc
Project: Holloman AFB; Alamogordo, NM

Check Std:	VC2986-CC2982	**Injection Date:**	11/18/10
Lab File ID:	C074942.D	**Injection Time:**	09:29
Instrument ID:	GCMSC	**Method:**	SW846 8260B

	IS 1 AREA	RT	IS 2 AREA	RT	IS 3 AREA	RT	IS 4 AREA	RT
Initial Cal [a]	1656702	7.24	1424250	10.34	863771	12.72	201420	4.91
Check Std [b]	1275841	7.24	1167750	10.34	728417	12.72	172048	4.90
Upper Limit [c]	2551682	7.74	2335500	10.84	1456834	13.22	344096	5.40
Lower Limit [d]	637921	6.74	583875	9.84	364209	12.22	86024	4.40

Lab Sample ID	IS 1 AREA	RT	IS 2 AREA	RT	IS 3 AREA	RT	IS 4 AREA	RT
VC2986-BS	1168175	7.24	1057587	10.34	655031	12.71	156431	4.90
VC2986-MB	1091341	7.24	956892	10.34	546791	12.72	147471	4.91
ZZZZZZ	1115912	7.24	986363	10.34	565435	12.71	152779	4.90
ZZZZZZ	973120	7.24	866499	10.34	497773	12.71	130601	4.91
ZZZZZZ	973653	7.24	850628	10.34	486304	12.71	133978	4.90
ZZZZZZ	1086305	7.23	947396	10.34	538383	12.71	144152	4.90
ZZZZZZ	942720	7.24	835839	10.34	467546	12.72	134857	4.90
F77883-24	1008610	7.24	912690	10.34	523670	12.72	157122	4.91
F77897-39	914174	7.24	807808	10.34	445783	12.72	127420	4.90
ZZZZZZ	902057	7.24	798761	10.34	457547	12.72	129426	4.90
ZZZZZZ	953593	7.24	840525	10.34	480874	12.72	138022	4.90
ZZZZZZ	950494	7.24	851200	10.34	488272	12.72	145351	4.90
F77883-24MS	1012413	7.24	936629	10.34	584034	12.72	149680	4.91
F77883-24MSD	1012973	7.24	937401	10.34	582105	12.72	148323	4.90
ZZZZZZ	987381	7.24	870766	10.34	495221	12.72	133932	4.91
ZZZZZZ	1016541	7.24	970025	10.34	615282	12.72	138154	4.90
ZZZZZZ	1634237	7.24	1511554	10.34	916315	12.72	199830	4.91
ZZZZZZ	1696658	7.23	1490000	10.34	875815	12.71	195840	4.90
ZZZZZZ	1483282	7.24	1314686	10.34	759148	12.71	178470	4.90
ZZZZZZ	1189857	7.24	1044404	10.34	604743	12.71	146085	4.91
ZZZZZZ	981395	7.24	863246	10.34	500264	12.71	133417	4.90
ZZZZZZ	932173	7.24	823843	10.34	477129	12.71	135366	4.90
ZZZZZZ	914433	7.24	822086	10.34	471939	12.71	135681	4.89

IS 1 = Fluorobenzene
IS 2 = Chlorobenzene-D5
IS 3 = 1,4-Dichlorobenzene-d4
IS 4 = Tert Butyl Alcohol-D10

(a) Initial Cal is: VC2982-ICC2982 C074842.D 11/13/10 13:38
(b) Check Std Limit = -50 to + 100% of initial cal area.
(c) Upper Limit = + 100% of check standard area; Retention time + 0.5 minutes.
(d) Lower Limit = -50% of check standard area; Retention time -0.5 minutes.

Volatile Internal Standard Area Summary

Job Number: F77897
Account: TETTNOAK Tetra Tech, Inc
Project: Holloman AFB; Alamogordo, NM

Check Std:	VF1348-CC1347	**Injection Date:**	11/23/10
Lab File ID:	F046023.D	**Injection Time:**	09:55
Instrument ID:	GCMSF	**Method:**	SW846 8260B

	IS 1 AREA	RT	IS 2 AREA	RT	IS 3 AREA	RT	IS 4 AREA	RT
Initial Cal [a]	516749	10.31	448628	13.70	262080	16.20	62200	7.53
Check Std [b]	437057	10.31	377487	13.70	227171	16.21	46923	7.52
Upper Limit [c]	874114	10.81	754974	14.20	454342	16.71	93846	8.02
Lower Limit [d]	218529	9.81	188744	13.20	113586	15.71	23462	7.02

Lab Sample ID	IS 1 AREA	RT	IS 2 AREA	RT	IS 3 AREA	RT	IS 4 AREA	RT
VF1348-BS	447083	10.31	372885	13.71	222098	16.21	50949	7.52
VF1348-MB	419969	10.30	349350	13.70	196495	16.20	49157	7.52
F78101-29	408515	10.30	340112	13.70	188493	16.20	46328	7.52
ZZZZZZ	389451	10.30	320445	13.70	180253	16.20	43244	7.52
ZZZZZZ	374094	10.30	313979	13.70	175282	16.20	42167	7.53
ZZZZZZ	372826	10.30	310954	13.70	171476	16.20	44356	7.52
F77897-39 [e]	366777	10.31	305239	13.70	173917	16.20	44068	7.53
ZZZZZZ	295591	10.31	248831	13.70	105905*	16.21	176258*	7.52
ZZZZZZ	357053	10.31	306001	13.70	169786	16.20	38661	7.52
F78101-29MS	381168	10.30	333197	13.70	198814	16.20	36327	7.52
F78101-29MSD	401979	10.31	338557	13.70	196710	16.20	46975	7.52

IS 1 = Fluorobenzene
IS 2 = Chlorobenzene-D5
IS 3 = 1,4-Dichlorobenzene-d4
IS 4 = Tert Butyl Alcohol-D10

(a) Initial Cal is: VF1347-ICC1347 F045996.D 11/22/10 14:28
(b) Check Std Limit = -50 to + 100% of initial cal area.
(c) Upper Limit = + 100% of check standard area; Retention time + 0.5 minutes.
(d) Lower Limit = -50% of check standard area; Retention time -0.5 minutes.
(e) Sample re-analyzed beyond hold time; reported results are considered minimum values.

Volatile Surrogate Recovery Summary

Job Number: F77897
Account: TETTNOAK Tetra Tech, Inc
Project: Holloman AFB; Alamogordo, NM

Method: SW846 8260B **Matrix:** AQ

Samples and QC shown here apply to the above method

Lab Sample ID	Lab File ID	S1	S2	S3	S4
F77897-39	F046031.D	106.0	94.0	99.0	89.0
F77897-39	C074951.D	111.0	119.0	99.0	110.0
F77883-24MS	C074956.D	112.0	119.0	93.0	99.0
F77883-24MSD	C074957.D	110.0	117.0	94.0	102.0
F78101-29MS	F046034.D	105.0	92.0	95.0	90.0
F78101-29MSD	F046035.D	102.0	98.0	98.0	95.0
VC2986-BS	C074943.D	107.0	111.0	96.0	100.0
VC2986-MB	C074944.D	108.0	110.0	97.0	105.0
VF1348-BS	F046024.D	99.0	103.0	99.0	92.0
VF1348-MB	F046025.D	106.0	96.0	100.0	93.0

Surrogate Compounds	Recovery Limits
S1 = Dibromofluoromethane	87-116%
S2 = 1,2-Dichloroethane-D4	76-127%
S3 = Toluene-D8	86-112%
S4 = 4-Bromofluorobenzene	84-120%

Initial Calibration Summary

Job Number: F77897
Account: TETTNOAK Tetra Tech, Inc
Project: Holloman AFB; Alamogordo, NM

Sample: VC2982-ICC2982
Lab FileID: C074842.D

Response Factor Report MSVOA5

```
Method       : C:\msdchem\2\METHODS\8260c.m (RTE Integrator)
Title        : SW-846 Method 5030B/8260B & EPA 624
Last Update  : Mon Nov 15 08:45:56 2010
Response via : Initial Calibration

Calibration Files
1   =C074839.D   2   =C074840.D   3   =C074841.D   4   =C074842.D
5      =C074843.D    6      =C074844.D

      Compound              1     2     3     4     5     6     Avg    %RSD
-------------------------------------------------------------------------------

1) I   Fluorobenzene         ----------------ISTD---------------------
2)     Dichlorodifluoromet 0.272 0.374 0.348 0.315 0.293 0.256 0.310  14.60
3) P   Chloromethane       0.378 0.416 0.372 0.335 0.305 0.256 0.344  16.70
           ---- Quadratic regr., Force(0,0) ----  Coefficient =  0.9995
             Response Ratio = 0.00000 + 0.40078 *A + -0.07183 *A^2

4) C   Vinyl Chloride      0.300 0.361 0.330 0.302 0.280 0.249 0.304  12.89
5)     Bromomethane        0.214 0.224 0.187 0.160 0.136 0.112 0.172  25.58
           ---- Quadratic regr., Force(0,0) ----  Coefficient =  0.9996
             Response Ratio = 0.00000 + 0.19624 *A + -0.04226 *A^2

6)     Chloroethane        0.132 0.164 0.137 0.111 0.089 0.072 0.117  28.65
           ---- Quadratic regr., Force(0,0) ----  Coefficient =  0.9982
             Response Ratio = 0.00000 + 0.13969 *A + -0.03442 *A^2

7)     Trichlorofluorometh 0.408 0.561 0.535 0.478 0.433 0.372 0.465  15.83
           ---- Quadratic regr., Force(0,0) ----  Coefficient =  0.9998
             Response Ratio = 0.00000 + 0.56270 *A + -0.09479 *A^2

8)     Ethyl Ether         0.156 0.194 0.194 0.179 0.166 0.146 0.172  11.55
9)     1,2-Dichlorotrifluo 0.209 0.274 0.264 0.236 0.221 0.195 0.233  13.35
10) C  1,1-Dichloroethene  0.318 0.395 0.393 0.356 0.332 0.292 0.348  11.93
11)    Freon 113           0.221 0.284 0.281 0.247 0.237 0.210 0.247  12.39
12)    Carbon Disulfide    0.629 0.773 0.762 0.688 0.656 0.582 0.682  11.05
13)    Iodomethane         0.423 0.501 0.495 0.466 0.458 0.415 0.460   7.75
14)    Methylene Chloride  0.425 0.325 0.297 0.317 0.255 0.242 0.310  21.06
           ---- Quadratic regr., Force(0,0) ----  Coefficient =  0.9962
             Response Ratio = 0.00000 + 0.33109 *A + -0.04609 *A^2

15)    Acetone             0.027 0.024 0.023 0.027 0.022 0.019 0.024  12.37
16)    Methyl acetate      0.046 0.048 0.049 0.047 0.046 0.043 0.046   4.70
17)    trans-1,2-Dichloroe 0.353 0.440 0.444 0.421 0.397 0.355 0.402  10.02
18)    Hexane              0.217 0.233 0.229 0.213 0.200 0.181 0.212   9.18
19)    Methyl Tert Butyl E 0.806 0.935 0.965 0.926 0.903 0.828 0.894   7.05
20)    Di-isopropyl ether  0.723 0.824 0.854 0.826 0.796 0.727 0.792   6.91
21) P  1,1-Dichloroethane  0.468 0.537 0.545 0.526 0.508 0.461 0.508   7.00
22)    Acrylonitrile       0.089 0.105 0.102 0.101 0.098 0.090 0.098   6.81
23)    ETBE                0.785 0.939 0.972 0.931 0.887 0.772 0.881   9.52
24)    Vinyl acetate       0.457 0.543 0.539 0.517 0.483 0.411 0.492  10.48
25)    cis-1,2-Dichloroeth 0.279 0.299 0.317 0.316 0.314 0.293 0.303   5.05
26)    2,2-Dichloropropane 0.366 0.484 0.504 0.470 0.443 0.393 0.443  12.18
27)    Bromochloromethane  0.147 0.178 0.184 0.183 0.183 0.172 0.174   8.10
28)    Cyclohexane         0.358 0.432 0.453 0.436 0.421 0.373 0.412   9.20
29) C  Chloroform          0.529 0.626 0.633 0.612 0.595 0.530 0.587   7.96
30)    Tetrahydrofuran     0.579 0.199 0.104 0.091 0.079 0.070 0.187  105.60
           ---- Quadratic regr., Force(0,0) ----  Coefficient =  0.9963
```

Initial Calibration Summary

Job Number: F77897
Account: TETTNOAK Tetra Tech, Inc
Project: Holloman AFB; Alamogordo, NM

Sample: VC2982-ICC2982
Lab FileID: C074842.D

```
                Response Ratio = 0.00000 + 0.10837 *A + -0.01957 *A^2

 31) S   Dibromofluoromethan 0.265 0.270 0.271 0.265 0.262 0.257 0.265   1.98
 32)     Carbon Tetrachlorid 0.446 0.582 0.608 0.582 0.557 0.510 0.547  10.93
 33)     1,1,1-Trichloroetha 0.430 0.573 0.591 0.565 0.536 0.488 0.531  11.53
 34)     2-Butanone          0.123 0.135 0.135 0.137 0.129 0.110 0.128   8.00
 35)     1,1-Dichloropropene 0.354 0.433 0.461 0.449 0.434 0.397 0.422   9.32
 36)     Benzene             1.024 1.210 1.240 1.249 1.225 1.120 1.178   7.51
 37)     TAME                0.698 0.806 0.884 0.882 0.867 0.789 0.821   8.83
 38) S   1,2-Dichloroethane- 0.334 0.351 0.354 0.347 0.343 0.333 0.344   2.53
 39)     1,2-Dichloroethane  0.439 0.510 0.520 0.495 0.465 0.412 0.474   8.97
 40)     Trichloroethene     0.294 0.348 0.353 0.349 0.338 0.305 0.331   7.59
 41)     Methylcyclohexane   0.360 0.418 0.451 0.438 0.428 0.387 0.414   8.22
 42)     Dibromomethane      0.182 0.209 0.219 0.218 0.212 0.191 0.205   7.44
 43) C   1,2-Dichloropropane 0.261 0.291 0.312 0.308 0.296 0.265 0.289   7.45
 44)     Bromodichloromethan 0.376 0.459 0.493 0.491 0.472 0.423 0.452   9.98
 45)     2-Chloroethyl vinyl 0.141 0.178 0.196 0.190 0.175 0.145 0.171  13.47
 46)     cis-1,3-Dichloropro 0.426 0.519 0.566 0.569 0.547 0.494 0.520  10.47

 47) I   Chlorobenzene-d5      ----------------ISTD---------------------
 48) S   Toluene-d8          1.225 1.229 1.210 1.215 1.231 1.264 1.229   1.55
 49) C   Toluene             1.380 1.673 1.676 1.695 1.682 1.573 1.613   7.59
 50)     2-Nitropropane      0.080 0.100 0.110 0.108 0.104 0.094 0.099  11.31
 51)     4-Methyl-2-pentanon 0.269 0.331 0.343 0.327 0.299 0.257 0.304  11.60
 52)     trans-1,3-Dichlorop 0.487 0.573 0.612 0.610 0.596 0.536 0.569   8.63
 53)     Tetrachloroethene   0.375 0.446 0.454 0.461 0.467 0.443 0.441   7.64
 54)     1,1,2-Trichloroetha 0.263 0.293 0.306 0.308 0.307 0.287 0.294   5.91
 55)     Dibromochloromethan 0.369 0.429 0.470 0.478 0.485 0.464 0.449   9.75
 56)     1,3-Dichloropropane 0.528 0.609 0.636 0.640 0.630 0.581 0.604   7.17
 57)     1,2-Dibromoethane   0.332 0.382 0.397 0.406 0.413 0.392 0.387   7.53
 58)     2-hexanone          0.182 0.232 0.253 0.250 0.229 0.201 0.224  12.48
 59)     1-Chlorohexane      0.373 0.480 0.530 0.533 0.531 0.499 0.491  12.58
 60) C   Ethylbenzene        1.699 1.932 1.978 1.970 1.863 1.665 1.851   7.42
 61) P   Chlorobenzene       0.976 1.144 1.174 1.173 1.121 0.997 1.098   8.05
 62)     1,1,1,2-Tetrachloro 0.368 0.421 0.451 0.455 0.454 0.427 0.429   7.78
 63)     m,p-Xylene          1.177 1.470 1.578 1.554 1.459 1.281 1.420  11.16
 64)     o-Xylene            1.097 1.457 1.590 1.595 1.562 1.431 1.455  12.97
 65)     Styrene             0.792 1.094 1.255 1.275 1.276 1.159 1.142  16.30
             ---- Quadratic regr., Force(0,0) ----  Coefficient =  0.9989
                Response Ratio = 0.00000 + 1.38626 *A + -0.10764 *A^2

 66) P   Bromoform           0.257 0.294 0.336 0.346 0.360 0.345 0.323  12.24
 67)     Isopropylbenzene    1.162 1.516 1.710 1.705 1.675 1.546 1.552  13.42
             ---- Quadratic regr., Force(0,0) ----  Coefficient =  0.9995
                Response Ratio = 0.00000 + 1.83818 *A + -0.14108 *A^2


 68) I   1,4-Dichlorobenzene-d ----------------ISTD---------------------
 69) S   4-Bromofluorobenzen 0.883 0.874 0.837 0.842 0.832 0.845 0.852   2.48
 70)     n-Propylbenzene     2.997 3.488 3.608 3.584 3.354 2.963 3.332   8.63
 71)     Bromobenzene        0.780 0.896 0.917 0.947 0.922 0.837 0.883   7.11
 72) P   1,1,2,2-Tetrachloro 0.719 0.797 0.800 0.814 0.793 0.736 0.777   5.03
 73)     1,3,5-Trimethylbenz 1.931 2.530 2.668 2.696 2.568 2.296 2.448  11.86
 74)     2-Chlorotoluene     2.122 2.572 2.583 2.575 2.438 2.169 2.410   8.81
 75)     trans-1,4-Dichloro- 0.095 0.089 0.146 0.182 0.190 0.186 0.148  31.32
             ---- Linear regr., Force(0,0) ----  Coefficient =  0.9982
                Response Ratio = 0.00000 + 0.18555 *A

 76)     1,2,3-Trichloroprop 0.238 0.267 0.268 0.269 0.266 0.248 0.259   5.07
 77)     Cyclohexanone       0.014 0.018 0.021 0.021 0.022 0.021 0.019  16.00
```

Initial Calibration Summary

Job Number: F77897
Account: TETTNOAK Tetra Tech, Inc
Project: Holloman AFB; Alamogordo, NM

Sample: VC2982-ICC2982
Lab FileID: C074842.D

```
            ---- Quadratic regr., Force(0,0) ----  Coefficient =  0.9997
              Response Ratio = 0.00000 + 0.02158 *A + -0.00004 *A^2

78)     4-Chlorotoluene     1.935 2.308 2.405 2.403 2.344 2.142 2.256   8.18
79)     tert-Butylbenzene   1.111 1.388 1.487 1.481 1.430 1.312 1.368  10.37
80)     1,2,4-Trimethylbenz 1.990 2.565 2.762 2.773 2.710 2.477 2.546  11.63
81)     sec-Butylbenzene    2.350 2.905 3.102 3.115 3.019 2.765 2.876  10.05
82)     4-Isopropyltoluene  1.879 2.356 2.617 2.651 2.587 2.391 2.414  11.97
83)     1,3-Dichlorobenzene 1.428 1.542 1.653 1.691 1.682 1.558 1.592   6.42
84)     1,4-Dichlorobenzene 1.623 1.680 1.760 1.759 1.761 1.601 1.697   4.32
85)     n-Butylbenzene      1.019 1.254 1.384 1.385 1.312 1.182 1.256  11.14
86)     Benzyl Chloride     0.251 0.314 0.371 0.383 0.372 0.339 0.338  14.77
87)     1,2-Dichlorobenzene 1.346 1.520 1.596 1.630 1.638 1.506 1.539   7.11
88)     1,2-Dibromo-3-Chlor 0.205 0.146 0.159 0.162 0.160 0.147 0.163  13.38
89)     Hexachlorobutadiene 0.393 0.334 0.354 0.353 0.353 0.338 0.354   5.92
90)     1,2,4-Trichlorobenz 0.864 0.910 1.017 1.081 1.101 1.023 0.999   9.42
91)     Naphthalene         2.198 2.159 2.579 2.703 2.728 2.547 2.486   9.99
92)     1,2,3-Trichlorobenz 0.894 0.816 0.950 0.991 1.015 0.941 0.935   7.66

93) I   Tert Butyl Alcohol-d1 ----------------ISTD---------------------
94)     acrolein            1.104 1.038 0.978 0.934 0.942 0.871 0.978   8.44
            ---- Linear regr., Force(0,0) ----  Coefficient =  0.9972
              Response Ratio = 0.00000 + 0.90033 *A

95)     Tert Butyl Alcohol  1.137 1.265 1.251 1.255 1.263 1.183 1.226   4.35
96)     tert Amyl alcohol   0.738 0.777 0.891 0.961 0.975 0.940 0.880  11.40
97)     1,4-Dioxane         0.127 0.127 0.148 0.159 0.164 0.158 0.147  11.11
---------------------------------------------------------------------------
(#) = Out of Range

          8260c.m           Mon Nov 15 09:01:32 2010
```

Initial Calibration Verification

Job Number: F77897
Account: TETTNOAK Tetra Tech, Inc
Project: Holloman AFB; Alamogordo, NM

Sample: VC2982-ICV2982
Lab FileID: C074845.D

Evaluate Continuing Calibration Report

```
Data File : C:\msdchem\2\DATA\111310\C074845.D          Vial: 7
Acq On    : 13 Nov 2010   2:52 pm                   Operator: AnaJ
Sample    : ICV2982-4                               Inst    : MSVOA5
Misc      : MS15870,VC2982,,,,,                     Multiplr: 1.00
MS Integration Params: Tiny.p

Method       : C:\msdchem\2\METHODS\8260c.m (RTE Integrator)
Title        : SW-846 Method 5030B/8260B & EPA 624
Last Update  : Mon Nov 15 08:45:56 2010
Response via : Multiple Level Calibration

Min. RRF     :   0.000  Min. Rel. Area :  50%  Max. R.T. Dev  0.50min
Max. RRF Dev :  20%     Max. Rel. Area : 200%
```

	Compound	AvgRF	CCRF	%Dev	Area%	Dev(min)	R.T.
1 I	Fluorobenzene	1.000	1.000	0.0	122	0.00	7.24
2	Dichlorodifluoromethane	0.310	0.466	-50.3#	181	-0.01	2.61
	----------	Amount	Calc.	%Drift		----------	
3 P	Chloromethane	40.000	47.025	-17.6	143	0.00	2.77
	----------	AvgRF	CCRF	%Dev		----------	
4 C	Vinyl Chloride	0.304	0.297	2.3	120	-0.01	2.90
	----------	Amount	Calc.	%Drift		----------	
5	Bromomethane	40.000	37.721	5.7	118	0.00	3.25
6	Chloroethane	40.000	35.836	10.4	113	0.00	3.38
7	Trichlorofluoromethane	40.000	39.531	1.2	123	0.00	3.59
	----------	AvgRF	CCRF	%Dev		----------	
8	Ethyl Ether	0.172	0.174	-1.2	119	0.00	3.81
9	1,2-Dichlorotrifluoroetha	0.233	0.260	-11.6	135	0.00	4.04
10 C	1,1-Dichloroethene	0.348	0.321	7.8	110	0.00	4.05
11	Freon 113	0.247	0.246	0.4	122	0.00	4.12
12	Carbon Disulfide	0.682	0.657	3.7	117	0.00	4.11
13	Iodomethane	0.460	0.486	-5.7	127	0.00	4.22
	----------	Amount	Calc.	%Drift		----------	
14	Methylene Chloride	40.000	33.170	17.1	96	0.00	4.65
	----------	AvgRF	CCRF	%Dev		----------	
15	Acetone	0.024	0.020	16.7	90	0.00	4.68
16	Methyl acetate	0.046	0.051	-10.9	132	-0.01	4.78
17	trans-1,2-Dichloroethene	0.402	0.398	1.0	116	0.00	4.80
18	Hexane	0.212	0.223	-5.2	128	0.00	4.85
19	Methyl Tert Butyl Ether	0.894	0.951	-6.4	125	0.00	4.91
20	Di-isopropyl ether	0.792	0.865	-9.2	128	0.00	5.26
21 P	1,1-Dichloroethane	0.508	0.521	-2.6	121	0.00	5.43
22	Acrylonitrile	0.098	0.098	0.0	118	0.00	5.47
23	ETBE	0.881	0.910	-3.3	120	0.00	5.64
24	Vinyl acetate	0.492	0.460	6.5	109	0.00	5.64
25	cis-1,2-Dichloroethene	0.303	0.341	-12.5	132	0.00	5.97
26	2,2-Dichloropropane	0.443	0.428	3.4	111	0.00	6.11
27	Bromochloromethane	0.174	0.191	-9.8	127	0.00	6.18
28	Cyclohexane	0.412	0.439	-6.6	123	0.00	6.21
29 C	Chloroform	0.587	0.607	-3.4	121	0.00	6.23

Initial Calibration Verification

Job Number: F77897
Account: TETTNOAK Tetra Tech, Inc
Project: Holloman AFB; Alamogordo, NM

Sample: VC2982-ICV2982
Lab FileID: C074845.D

			Amount	Calc.	%Drift			
30		Tetrahydrofuran	40.000	41.054	-2.6	127	0.00	6.41

			AvgRF	CCRF	%Dev			
31	S	Dibromofluoromethane	0.265	0.260	1.9	120	0.00	6.42
32		Carbon Tetrachloride	0.547	0.560	-2.4	118	0.00	6.41
33		1,1,1-Trichloroethane	0.531	0.532	-0.2	115	0.00	6.48
34		2-Butanone	0.128	0.125	2.3	112	0.00	6.53
35		1,1-Dichloropropene	0.422	0.448	-6.2	122	0.00	6.58
36		Benzene	1.178	1.264	-7.3	124	0.00	6.84
37		TAME	0.821	0.893	-8.8	124	0.00	6.93
38	S	1,2-Dichloroethane-d4	0.344	0.313	9.0	110	0.00	6.97
39		1,2-Dichloroethane	0.474	0.462	2.5	114	0.00	7.04
40		Trichloroethene	0.331	0.348	-5.1	122	0.00	7.41
41		Methylcyclohexane	0.414	0.466	-12.6	130	0.00	7.42
42		Dibromomethane	0.205	0.216	-5.4	121	0.00	7.84
43	C	1,2-Dichloropropane	0.289	0.304	-5.2	121	0.00	7.93
44		Bromodichloromethane	0.452	0.461	-2.0	115	0.00	7.98
45		2-Chloroethyl vinyl ether	0.171	0.199	-16.4	128	0.00	8.52
46		cis-1,3-Dichloropropene	0.520	0.564	-8.5	121	0.00	8.60
47	I	Chlorobenzene-d5	1.000	1.000	0.0	117	0.00	10.34
48	S	Toluene-d8	1.229	1.229	0.0	118	0.00	8.79
49	C	Toluene	1.613	1.769	-9.7	122	0.00	8.84
50		2-Nitropropane	0.099	0.100	-1.0	108	0.00	9.07
51		4-Methyl-2-pentanone	0.304	0.314	-3.3	112	0.00	9.19
52		trans-1,3-Dichloropropene	0.569	0.650	-14.2	124	0.00	9.24
53		Tetrachloroethene	0.441	0.501	-13.6	127	0.00	9.23
54		1,1,2-Trichloroethane	0.294	0.316	-7.5	119	0.00	9.40
55		Dibromochloromethane	0.449	0.496	-10.5	121	0.00	9.59
56		1,3-Dichloropropane	0.604	0.645	-6.8	117	0.00	9.68
57		1,2-Dibromoethane	0.387	0.427	-10.3	123	0.00	9.85
58		2-hexanone	0.224	0.226	-0.9	106	0.00	10.02
59		1-Chlorohexane	0.491	0.541	-10.2	118	0.00	10.30
60	C	Ethylbenzene	1.851	1.958	-5.8	116	0.00	10.37
61	P	Chlorobenzene	1.098	1.205	-9.7	120	0.00	10.36
62		1,1,1,2-Tetrachloroethane	0.429	0.460	-7.2	118	0.00	10.41
63		m,p-Xylene	1.420	1.538	-8.3	115	0.00	10.51
64		o-Xylene	1.455	1.604	-10.2	117	0.00	10.95

			Amount	Calc.	%Drift			
65		Styrene	40.000	40.496	-1.2	120	0.00	11.00

			AvgRF	CCRF	%Dev			
66	P	Bromoform	0.323	0.354	-9.6	120	0.00	11.05

			Amount	Calc.	%Drift			
67		Isopropylbenzene	40.000	45.649	-14.1	133	0.00	11.26

			AvgRF	CCRF	%Dev			
68	I	1,4-Dichlorobenzene-d4	1.000	1.000	0.0	113	0.00	12.72
69	S	4-Bromofluorobenzene	0.852	0.840	1.4	113	0.00	11.56
70		n-Propylbenzene	3.332	3.639	-9.2	115	0.00	11.68
71		Bromobenzene	0.883	0.980	-11.0	117	0.00	11.69
72	P	1,1,2,2-Tetrachloroethane	0.777	0.855	-10.0	119	0.00	11.75
73		1,3,5-Trimethylbenzene	2.448	2.721	-11.2	114	0.00	11.87
74		2-Chlorotoluene	2.410	2.601	-7.9	114	0.00	11.86

			Amount	Calc.	%Drift			

Initial Calibration Verification

Job Number: F77897
Account: TETTNOAK Tetra Tech, Inc
Project: Holloman AFB; Alamogordo, NM

Sample: VC2982-ICV2982
Lab FileID: C074845.D

75	trans-1,4-Dichloro-2-Bute	40.000	39.999	0.0	115	0.00	11.93
	----------	AvgRF	CCRF	%Dev	----------		
76	1,2,3-Trichloropropane	0.259	0.251	3.1	105	0.00	11.90
	----------	Amount	Calc.	%Drift	----------		
77	Cyclohexanone	200.000	202.513	-1.3	115	0.00	11.97
	----------	AvgRF	CCRF	%Dev	----------		
78	4-Chlorotoluene	2.256	2.451	-8.6	115	0.00	12.03
79	tert-Butylbenzene	1.368	1.477	-8.0	113	0.00	12.21
80	1,2,4-Trimethylbenzene	2.546	2.818	-10.7	115	0.00	12.28
81	sec-Butylbenzene	2.876	3.203	-11.4	116	0.00	12.39
82	4-Isopropyltoluene	2.414	2.754	-14.1	117	0.00	12.53
83	1,3-Dichlorobenzene	1.592	1.771	-11.2	118	0.00	12.65
84	1,4-Dichlorobenzene	1.697	1.848	-8.9	119	0.00	12.74
85	n-Butylbenzene	1.256	1.368	-8.9	111	0.00	12.97
86	Benzyl Chloride	0.338	0.369	-9.2	109	0.00	12.98
87	1,2-Dichlorobenzene	1.539	1.720	-11.8	119	0.00	13.18
88	1,2-Dibromo-3-Chloropropa	0.163	0.161	1.2	112	0.00	13.96
89	Hexachlorobutadiene	0.354	0.395	-11.6	126	0.00	14.53
90	1,2,4-Trichlorobenzene	0.999	1.154	-15.5	121	0.00	14.57
91	Naphthalene	2.486	2.855	-14.8	119	0.00	14.85
92	1,2,3-Trichlorobenzene	0.935	1.071	-14.5	122	0.00	15.01
93 I	Tert Butyl Alcohol-d10	1.000	1.000	0.0	120	0.00	4.90
	----------	Amount	Calc.	%Drift	----------		
94	acrolein	200.000	148.406	25.8#	86	-0.01	4.38
	----------	AvgRF	CCRF	%Dev	----------		
95	Tert Butyl Alcohol	1.226	1.238	-1.0	119	0.00	4.98
96	tert Amyl alcohol	0.880	0.996	-13.2	125	0.00	7.09
97	1,4-Dioxane	0.147	0.170	-15.6	129	0.00	8.17

(#) = Out of Range SPCC's out = 0 CCC's out = 0
C074842.D 8260c.m Mon Nov 15 09:02:07 2010

Continuing Calibration Summary

Job Number: F77897
Account: TETTNOAK Tetra Tech, Inc
Project: Holloman AFB; Alamogordo, NM

Sample: VC2986-CC2982
Lab FileID: C074942.D

Evaluate Continuing Calibration Report

Data File : C:\msdchem\2\DATA\111810\C074942.D Vial: 2
Acq On : 18 Nov 2010 9:29 am Operator: AnaJ
Sample : CC2982-4 Inst : MSVOA5
Misc : MS15897,VC2986,,,,, Multiplr: 1.00
MS Integration Params: Tiny.p

Method : C:\msdchem\2\METHODS\8260c.m (RTE Integrator)
Title : SW-846 Method 5030B/8260B & EPA 624
Last Update : Mon Nov 15 08:45:56 2010
Response via : Multiple Level Calibration

Min. RRF : 0.000 Min. Rel. Area : 50% Max. R.T. Dev 0.50min
Max. RRF Dev : 20% Max. Rel. Area : 200%

	Compound	AvgRF	CCRF	%Dev	Area%	Dev(min)	R.T.
1 I	Fluorobenzene	1.000	1.000	0.0	77	0.00	7.24
2	Dichlorodifluoromethane	0.310	0.310	0.0	76	0.00	2.63
	----------	Amount	Calc.	%Drift		----------	
3 P	Chloromethane	40.000	42.239	-5.6	83	0.00	2.77
	----------	AvgRF	CCRF	%Dev		----------	
4 C	Vinyl Chloride	0.304	0.309	-1.6	79	-0.01	2.90
	----------	Amount	Calc.	%Drift		----------	
5	Bromomethane	40.000	47.031	-17.6	88	0.00	3.25
6	Chloroethane	40.000	50.808	-27.0#	92	0.00	3.38
7	Trichlorofluoromethane	40.000	42.234	-5.6	82	0.00	3.60
	----------	AvgRF	CCRF	%Dev		----------	
8	Ethyl Ether	0.172	0.203	-18.0	88	0.00	3.80
9	1,2-Dichlorotrifluoroetha	0.233	0.264	-13.3	86	0.00	4.04
10 C	1,1-Dichloroethene	0.348	0.401	-15.2	87	0.00	4.05
11	Freon 113	0.247	0.266	-7.7	83	0.00	4.13
12	Carbon Disulfide	0.682	0.765	-12.2	86	0.00	4.11
13	Iodomethane	0.460	0.514	-11.7	85	0.00	4.22
	----------	Amount	Calc.	%Drift		----------	
14	Methylene Chloride	40.000	40.549	-1.4	72	-0.01	4.63
	----------	AvgRF	CCRF	%Dev		----------	
15	Acetone	0.024	0.030	-25.0#	85	0.00	4.68
16	Methyl acetate	0.046	0.045	2.2	73	0.00	4.79
17	trans-1,2-Dichloroethene	0.402	0.437	-8.7	80	0.00	4.81
18	Hexane	0.212	0.215	-1.4	78	0.00	4.85
19	Methyl Tert Butyl Ether	0.894	0.947	-5.9	79	0.00	4.91
20	Di-isopropyl ether	0.792	0.840	-6.1	78	0.00	5.26
21 P	1,1-Dichloroethane	0.508	0.527	-3.7	77	0.00	5.43
22	Acrylonitrile	0.098	0.095	3.1	72	0.00	5.48
23	ETBE	0.881	0.942	-6.9	78	0.00	5.64
24	Vinyl acetate	0.492	0.529	-7.5	79	0.00	5.63
25	cis-1,2-Dichloroethene	0.303	0.297	2.0	72	0.00	5.97
26	2,2-Dichloropropane	0.443	0.499	-12.6	82	0.00	6.11
27	Bromochloromethane	0.174	0.171	1.7	72	0.00	6.18
28	Cyclohexane	0.412	0.397	3.6	70	0.00	6.20
29 C	Chloroform	0.587	0.617	-5.1	78	0.00	6.23

Continuing Calibration Summary

Job Number: F77897
Account: TETTNOAK Tetra Tech, Inc
Project: Holloman AFB; Alamogordo, NM

Sample: VC2986-CC2982
Lab FileID: C074942.D

			Amount	Calc.	%Drift			
30		Tetrahydrofuran	40.000	29.567	26.1#	60	0.00	6.41

			AvgRF	CCRF	%Dev			
31	S	Dibromofluoromethane	0.265	0.284	-7.2	83	0.00	6.42
32		Carbon Tetrachloride	0.547	0.574	-4.9	76	0.00	6.41
33		1,1,1-Trichloroethane	0.531	0.566	-6.6	77	0.00	6.48
34		2-Butanone	0.128	0.142	-10.9	80	0.00	6.53
35		1,1-Dichloropropene	0.422	0.428	-1.4	73	0.00	6.58
36		Benzene	1.178	1.159	1.6	72	0.00	6.84
37		TAME	0.821	0.849	-3.4	74	0.00	6.93
38	S	1,2-Dichloroethane-d4	0.344	0.391	-13.7	87	0.00	6.96
39		1,2-Dichloroethane	0.474	0.519	-9.5	81	0.00	7.04
40		Trichloroethene	0.331	0.327	1.2	72	0.00	7.41
41		Methylcyclohexane	0.414	0.386	6.8	68	0.00	7.42
42		Dibromomethane	0.205	0.205	0.0	72	0.00	7.83
43	C	1,2-Dichloropropane	0.289	0.284	1.7	71	0.00	7.93
44		Bromodichloromethane	0.452	0.482	-6.6	76	0.00	7.98
45		2-Chloroethyl vinyl ether	0.171	0.167	2.3	68	0.00	8.52
46		cis-1,3-Dichloropropene	0.520	0.529	-1.7	72	0.00	8.60
47	I	Chlorobenzene-d5	1.000	1.000	0.0	82	0.00	10.34
48	S	Toluene-d8	1.229	1.167	5.0	79	0.00	8.79
49	C	Toluene	1.613	1.455	9.8	70	0.00	8.84
50		2-Nitropropane	0.099	0.101	-2.0	77	0.00	9.07
51		4-Methyl-2-pentanone	0.304	0.286	5.9	72	0.00	9.19
52		trans-1,3-Dichloropropene	0.569	0.548	3.7	74	0.00	9.24
53		Tetrachloroethene	0.441	0.390	11.6	69	0.00	9.23
54		1,1,2-Trichloroethane	0.294	0.261	11.2	70	0.00	9.40
55		Dibromochloromethane	0.449	0.416	7.3	71	0.00	9.59
56		1,3-Dichloropropane	0.604	0.545	9.8	70	0.00	9.68
57		1,2-Dibromoethane	0.387	0.342	11.6	69	0.00	9.85
58		2-hexanone	0.224	0.236	-5.4	78	0.00	10.01
59		1-Chlorohexane	0.491	0.446	9.2	69	0.00	10.30
60	C	Ethylbenzene	1.851	1.738	6.1	72	0.00	10.37
61	P	Chlorobenzene	1.098	1.017	7.4	71	0.00	10.36
62		1,1,1,2-Tetrachloroethane	0.429	0.405	5.6	73	0.00	10.41
63		m,p-Xylene	1.420	1.390	2.1	73	0.00	10.51
64		o-Xylene	1.455	1.411	3.0	73	0.00	10.94

			Amount	Calc.	%Drift			
65		Styrene	40.000	33.380	16.5	71	0.00	11.00

			AvgRF	CCRF	%Dev			
66	P	Bromoform	0.323	0.285	11.8	68	0.00	11.05

			Amount	Calc.	%Drift			
67		Isopropylbenzene	40.000	33.868	15.3	71	0.00	11.25

			AvgRF	CCRF	%Dev			
68	I	1,4-Dichlorobenzene-d4	1.000	1.000	0.0	84	0.00	12.72
69	S	4-Bromofluorobenzene	0.852	0.847	0.6	85	0.00	11.56
70		n-Propylbenzene	3.332	3.029	9.1	71	0.00	11.68
71		Bromobenzene	0.883	0.791	10.4	70	0.00	11.69
72	P	1,1,2,2-Tetrachloroethane	0.777	0.650	16.3	67	0.00	11.75
73		1,3,5-Trimethylbenzene	2.448	2.308	5.7	72	0.00	11.87
74		2-Chlorotoluene	2.410	2.245	6.8	74	0.00	11.86

			Amount	Calc.	%Drift			

Continuing Calibration Summary

Job Number: F77897
Account: TETTNOAK Tetra Tech, Inc
Project: Holloman AFB; Alamogordo, NM

Sample: VC2986-CC2982
Lab FileID: C074942.D

75	trans-1,4-Dichloro-2-Bute	40.000	24.843	37.9#	53	0.00	11.93
	----------	AvgRF	CCRF	%Dev	----------		
76	1,2,3-Trichloropropane	0.259	0.224	13.5	70	0.00	11.90
	----------	Amount	Calc.	%Drift	----------		
77	Cyclohexanone	200.000	160.252	19.9	68	0.00	11.97
	----------	AvgRF	CCRF	%Dev	----------		
78	4-Chlorotoluene	2.256	2.099	7.0	74	0.00	12.03
79	tert-Butylbenzene	1.368	1.287	5.9	73	0.00	12.20
80	1,2,4-Trimethylbenzene	2.546	2.394	6.0	73	0.00	12.28
81	sec-Butylbenzene	2.876	2.585	10.1	70	0.00	12.39
82	4-Isopropyltoluene	2.414	2.238	7.3	71	0.00	12.53
83	1,3-Dichlorobenzene	1.592	1.429	10.2	71	0.00	12.64
84	1,4-Dichlorobenzene	1.697	1.500	11.6	72	0.00	12.73
85	n-Butylbenzene	1.256	1.172	6.7	71	0.00	12.97
86	Benzyl Chloride	0.338	0.328	3.0	72	0.00	12.98
87	1,2-Dichlorobenzene	1.539	1.370	11.0	71	0.00	13.18
88	1,2-Dibromo-3-Chloropropa	0.163	0.136	16.6	71	0.00	13.95
89	Hexachlorobutadiene	0.354	0.308	13.0	74	0.00	14.53
90	1,2,4-Trichlorobenzene	0.999	0.894	10.5	70	0.00	14.57
91	Naphthalene	2.486	2.188	12.0	68	0.00	14.85
92	1,2,3-Trichlorobenzene	0.935	0.827	11.6	70	0.00	15.01
93 I	Tert Butyl Alcohol-d10	1.000	1.000	0.0	85	-0.01	4.90
	----------	Amount	Calc.	%Drift	----------		
94	acrolein	200.000	206.181	-3.1	85	0.00	4.39
	----------	AvgRF	CCRF	%Dev	----------		
95	Tert Butyl Alcohol	1.226	1.041	15.1	71	0.00	4.98
96	tert Amyl alcohol	0.880	0.735	16.5	65	0.00	7.09
97	1,4-Dioxane	0.147	0.118	19.7	64	0.00	8.17

(#) = Out of Range SPCC's out = 0 CCC's out = 0
C074842.D 8260c.m Thu Nov 18 10:16:38 2010

Initial Calibration Summary

Job Number: F77897
Account: TETTNOAK Tetra Tech, Inc
Project: Holloman AFB; Alamogordo, NM

Sample: VF1347-ICC1347
Lab FileID: F045996.D

Response Factor Report MSVOA9

Method : C:\MSDCHEM\1\METHODS\8260FW.M (RTE Integrator)
Title : SW-846 Method 5035A/8260B
Last Update : Tue Nov 23 08:44:36 2010
Response via : Initial Calibration

Calibration Files
1 =F045993.D 2 =F045994.D 3 =F045995.D 4 =F045996.D
5 =F045997.D 6 =F045998.D

	Compound	1	2	3	4	5	6	Avg	%RSD
1) I	Fluorobenzene	----------ISTD----------							
2)	Dichlorodifluoromet	0.565	0.530	0.477	0.498	0.501	0.445	0.503	8.27
3) P	Chloromethane	0.953	0.948	0.853	0.859	0.855	0.747	0.869	8.71
4) C	Vinyl Chloride	0.608	0.686	0.612	0.604	0.583	0.511	0.601	9.38
5)	Bromomethane	0.499	0.356	0.287	0.241	0.214	0.171	0.295	40.16
	---- Quadratic regr., Force(0,0) ---- Coefficient = 0.9989								
	Response Ratio = 0.00000 + 0.30379 *A + -0.06616 *A^2								
6)	Chloroethane	0.264	0.322	0.278	0.262	0.220	0.187	0.255	18.43
	---- Quadratic regr., Force(0,0) ---- Coefficient = 0.9998								
	Response Ratio = 0.00000 + 0.30546 *A + -0.05971 *A^2								
7)	Trichlorofluorometh	0.706	0.723	0.683	0.656	0.629	0.539	0.656	10.17
8)	Ethyl Ether	0.328	0.351	0.325	0.307	0.295	0.252	0.310	10.97
9)	1,2-Dichlorotrifluo	0.548	0.499	0.414	0.394	0.381	0.325	0.427	19.25
	---- Quadratic regr., Force(0,0) ---- Coefficient = 0.9983								
	Response Ratio = 0.00000 + 0.46098 *A + -0.06642 *A^2								
10) C	1,1-Dichloroethene	0.666	0.753	0.688	0.648	0.618	0.545	0.653	10.69
11)	Freon 113	0.419	0.378	0.344	0.335	0.309	0.271	0.343	15.12
	---- Quadratic regr., Force(0,0) ---- Coefficient = 0.9996								
	Response Ratio = 0.00000 + 0.38015 *A + -0.05390 *A^2								
12)	Carbon Disulfide	1.280	1.308	1.206	1.144	1.088	0.904	1.155	12.81
13)	Iodomethane	0.661	0.731	0.666	0.646	0.630	0.538	0.645	9.76
14)	Allyl chloride	0.827	0.937	0.839	0.832	0.880	0.835	0.858	5.02
15)	Methylene Chloride	4.454	1.435	0.852	0.779	0.812	0.769	1.517	96.32
	---- Linear regr., Force(0,0) ---- Coefficient = 0.9983								
	Response Ratio = 0.00000 + 0.78563 *A								
16)	Acetone	0.378	0.332	0.305	0.292	0.293	0.262	0.310	12.90
17)	Methyl acetate	0.360	0.372	0.350	0.350	0.358	0.331	0.353	3.84
18)	trans-1,2-Dichloroe	0.668	0.694	0.633	0.614	0.640	0.619	0.645	4.76
19)	Hexane	0.446	0.340	0.296	0.288	0.291	0.274	0.322	19.99
	---- Linear regr., Force(0,0) ---- Coefficient = 0.9986								
	Response Ratio = 0.00000 + 0.28108 *A								
20)	Methyl Tert Butyl E	1.013	1.157	1.055	1.067	1.101	1.059	1.075	4.54
21)	Acetonitrile	0.083	0.066	0.062	0.061	0.065	0.057	0.066	14.08
22)	Di-isopropyl ether	1.677	1.746	1.706	1.696	1.759	1.615	1.700	3.04
23)	Chloroprene	0.592	0.713	0.678	0.683	0.735	0.699	0.683	7.24
24) P	1,1-Dichloroethane	0.741	0.783	0.730	0.730	0.757	0.724	0.744	2.99
25)	Acrylonitrile	0.188	0.178	0.180	0.183	0.189	0.174	0.182	3.07
26)	ETBE	1.310	1.452	1.443	1.472	1.497	1.374	1.425	4.88
27)	Vinyl acetate	0.875	1.005	1.026	0.986	0.954	0.832	0.946	8.13
28)	cis-1,2-Dichloroeth	0.399	0.401	0.379	0.374	0.384	0.373	0.385	3.17

Initial Calibration Summary

Job Number: F77897
Account: TETTNOAK Tetra Tech, Inc
Project: Holloman AFB; Alamogordo, NM

Sample: VF1347-ICC1347
Lab FileID: F045996.D

29)		2,2-Dichloropropane	0.565	0.598	0.539	0.545	0.561	0.537	0.557	4.10
30)		Bromochloromethane	0.209	0.226	0.216	0.210	0.215	0.200	0.213	4.11
31)		Cyclohexane	0.632	0.680	0.665	0.676	0.704	0.669	0.671	3.49
32)	C	Chloroform	0.673	0.737	0.677	0.678	0.697	0.662	0.687	3.90
33)		Ethyl acetate	0.626	0.625	0.627	0.625	0.636	0.567	0.618	4.10
34)		Tetrahydrofuran	0.148	0.167	0.147	0.148	0.156	0.144	0.152	5.53
35)	S	Dibromofluoromethan	0.295	0.289	0.287	0.284	0.283	0.277	0.286	2.09
36)		Carbon Tetrachlorid	0.518	0.637	0.594	0.584	0.606	0.575	0.586	6.79
37)		1,1,1-Trichloroetha	0.560	0.652	0.584	0.580	0.603	0.575	0.592	5.46
38)		2-Butanone	0.347	0.346	0.351	0.338	0.340	0.305	0.338	4.99
39)		1,1-Dichloropropene	0.447	0.500	0.476	0.473	0.498	0.479	0.479	4.03
40)		Propionitrile	0.073	0.074	0.071	0.071	0.071	0.065	0.071	4.72
41)		Methacrylonitrile	0.399	0.428	0.410	0.381	0.373	0.327	0.386	9.07
42)		Benzene	1.366	1.539	1.470	1.487	1.481	1.279	1.437	6.68
43)		TAME	1.056	1.173	1.177	1.190	1.222	1.115	1.155	5.18
44)	S	1,2-Dichloroethane-	0.358	0.345	0.350	0.355	0.346	0.338	0.349	2.08
45)		1,2-Dichloroethane	0.624	0.661	0.637	0.626	0.654	0.601	0.634	3.45
46)		Trichloroethene	0.388	0.419	0.387	0.377	0.393	0.381	0.391	3.78
47)		Methylcyclohexane	0.423	0.454	0.429	0.435	0.447	0.431	0.437	2.69
48)		Dibromomethane	0.253	0.264	0.245	0.240	0.260	0.251	0.252	3.57
49)	C	1,2-Dichloropropane	0.322	0.436	0.396	0.394	0.413	0.402	0.394	9.75
50)		Bromodichloromethan	0.515	0.515	0.482	0.489	0.519	0.498	0.503	3.11
51)		Methyl methacrylate	0.354	0.441	0.444	0.442	0.474	0.448	0.434	9.51
52)		2-Chloroethyl vinyl	0.117	0.181	0.211	0.229	0.252	0.238	0.205	24.31
		---- Linear regr., Force(0,0) ---- Coefficient = 0.9977								
		Response Ratio = 0.00000 + 0.24060 *A								
53)		cis-1,3-Dichloropro	0.610	0.615	0.616	0.594	0.632	0.616	0.614	2.00
54)	I	Chlorobenzene-d5	----------ISTD----------							
55)	S	Toluene-d8	1.173	1.159	1.145	1.098	1.107	1.179	1.144	2.96
56)	C	Toluene	1.725	1.971	1.814	1.756	1.826	1.821	1.819	4.67
57)		2-Nitropropane	0.121	0.132	0.136	0.142	0.151	0.150	0.139	8.36
58)		4-Methyl-2-pentanon	0.630	0.689	0.677	0.650	0.636	0.595	0.646	5.22
59)		trans-1,3-Dichlorop	0.622	0.668	0.642	0.650	0.674	0.692	0.658	3.80
60)		Tetrachloroethene	0.423	0.498	0.434	0.408	0.426	0.427	0.436	7.27
61)		Ethyl methacrylate	0.513	0.555	0.589	0.604	0.657	0.655	0.596	9.49
62)		1,1,2-Trichloroetha	0.334	0.373	0.353	0.331	0.354	0.355	0.350	4.40
63)		Dibromochloromethan	0.407	0.478	0.450	0.449	0.476	0.489	0.458	6.53
64)		1,3-Dichloropropane	0.713	0.740	0.667	0.661	0.704	0.710	0.699	4.29
65)		1,2-Dibromoethane	0.395	0.442	0.410	0.411	0.425	0.439	0.420	4.36
66)		2-hexanone	0.480	0.611	0.607	0.595	0.577	0.539	0.568	8.91
67)		1-Chlorohexane	0.495	0.546	0.537	0.518	0.565	0.588	0.542	6.11
68)	C	Ethylbenzene	2.112	2.293	2.148	2.128	2.194	2.113	2.164	3.22
69)	P	Chlorobenzene	1.267	1.423	1.278	1.264	1.302	1.274	1.302	4.68
70)		1,1,1,2-Tetrachloro	0.513	0.506	0.485	0.483	0.521	0.512	0.503	3.15
71)		m,p-Xylene	1.526	1.730	1.670	1.660	1.691	1.592	1.645	4.47
72)		o-Xylene	1.519	1.781	1.723	1.751	1.839	1.787	1.733	6.46
73)		Styrene	0.960	1.192	1.255	1.306	1.375	1.356	1.241	12.32
74)	P	Bromoform	0.254	0.279	0.305	0.317	0.339	0.345	0.306	11.53
75)		Isopropylbenzene	1.390	1.613	1.631	1.632	1.722	1.654	1.607	7.03
76)	I	1,4-Dichlorobenzene-d	----------ISTD----------							
77)	S	4-Bromofluorobenzen	0.914	0.904	0.887	0.897	0.920	0.972	0.916	3.29
78)		cis-1,4-Dichloro-2-	0.223	0.065	0.145	0.201	0.255	0.285	0.196	40.85
		---- Quadratic regr., Force(0,0) ---- Coefficient = 0.9984								
		Response Ratio = 0.00000 + 0.14739 *A + 0.07014 *A^2								
79)		n-Propylbenzene	3.895	4.248	4.149	4.070	4.305	4.150	4.136	3.49
80)		Bromobenzene	1.084	1.107	1.047	0.995	1.040	0.991	1.044	4.45

Initial Calibration Summary

Job Number: F77897
Account: TETTNOAK Tetra Tech, Inc
Project: Holloman AFB; Alamogordo, NM

Sample: VF1347-ICC1347
Lab FileID: F045996.D

```
 81) P   1,1,2,2-Tetrachloro 1.060 1.103 1.050 1.026 1.078 1.029 1.058   2.81
 82)     1,3,5-Trimethylbenz 2.542 2.861 2.830 2.799 2.961 2.840 2.806   4.99
 83)     2-Chlorotoluene     2.750 2.947 2.799 2.814 2.908 2.836 2.842   2.57
 84)     trans-1,4-Dichloro- 0.174 0.033 0.166 0.221 0.282 0.295 0.195  48.94
             ---- Quadratic regr., Force(0,0) ----  Coefficient =  0.9966
               Response Ratio = 0.00000 + 0.18215 *A + 0.05909 *A^2

 85)     1,2,3-Trichloroprop 0.293 0.309 0.286 0.281 0.302 0.294 0.294   3.50
 86)     Cyclohexanone       0.063 0.036 0.035 0.035 0.038 0.037 0.041  26.76
             ---- Linear regr., Force(0,0) ----  Coefficient =  0.9987
               Response Ratio = 0.00000 + 0.03713 *A

 87)     4-Chlorotoluene     2.590 2.769 2.789 2.767 2.975 2.872 2.794   4.58
 88)     tert-Butylbenzene   1.616 1.683 1.658 1.662 1.759 1.688 1.678   2.83
 89)     1,2,4-Trimethylbenz 2.538 3.162 2.998 3.001 3.122 2.931 2.959   7.54
 90)     Pentachloroethane   0.509 0.588 0.581 0.564 0.588 0.555 0.564   5.36
 91)     sec-Butylbenzene    3.419 3.450 3.190 3.144 3.299 3.151 3.276   4.13
 92)     4-Isopropyltoluene  2.600 2.753 2.681 2.665 2.831 2.701 2.705   2.93
 93)     1,3-Dichlorobenzene 1.839 2.004 1.885 1.859 1.950 1.878 1.903   3.28
 94)     1,4-Dichlorobenzene 2.350 2.159 1.961 1.931 2.013 1.907 2.053   8.31
 95)     n-Butylbenzene      1.337 1.316 1.538 1.599 1.712 1.658 1.527  10.86
 96)     Benzyl Chloride     0.420 0.431 0.430 0.443 0.483 0.475 0.447   5.78
 97)     1,2-Dichlorobenzene 1.987 2.076 1.906 1.914 1.979 1.886 1.958   3.61
 98)     1,2-Dibromo-3-Chlor 0.161 0.199 0.186 0.202 0.218 0.222 0.198  11.20
 99)     Hexachlorobutadiene 0.834 0.344 0.321 0.293 0.310 0.298 0.400  53.35
             ---- Linear regr., Force(0,0) ----  Coefficient =  0.9989
               Response Ratio = 0.00000 + 0.30140 *A

100)     1,2,4-Trichlorobenz 1.754 1.076 0.984 0.961 1.020 0.948 1.124  27.78
             ---- Linear regr., Force(0,0) ----  Coefficient =  0.9977
               Response Ratio = 0.00000 + 0.97122 *A

101)     Naphthalene         5.292 2.958 2.901 2.994 3.226 3.038 3.401  27.42
             ---- Linear regr., Force(0,0) ----  Coefficient =  0.9979
               Response Ratio = 0.00000 + 3.08470 *A

102)     1,2,3-Trichlorobenz 1.955 1.028 0.922 0.901 0.950 0.901 1.110  37.57
             ---- Linear regr., Force(0,0) ----  Coefficient =  0.9987
               Response Ratio = 0.00000 + 0.91595 *A


103) I   Tert Butyl Alcohol-d1 ----------------ISTD---------------------
104)     Ethanol             0.989 0.454 0.266 0.256 0.249 0.193 0.401  75.10
             ---- Quadratic regr., Force(0,0) ----  Coefficient =  0.9909
               Response Ratio = 0.00000 + 0.32257 *A + -0.01571 *A^2

105)     Acrolein            4.308 2.803 2.336 2.384 2.224 2.299 2.726  29.40
             ---- Linear regr., Force(0,0) ----  Coefficient =  0.9992
               Response Ratio = 0.00000 + 2.28704 *A

106)     Tert butyl alcohol  2.261 1.852 1.632 1.711 1.674 1.647 1.796  13.43
107)     Isobutyl alcohol    0.867 0.775 0.722 0.679 0.926 0.642 0.769  14.36
108)     Tert Amyl Alcohol   1.649 1.420 1.336 1.403 1.453 1.404 1.444   7.44
109)     1,4-Dioxane         0.234 0.137 0.126 0.160 0.139 0.147 0.157  25.04
             ---- Linear regr., Force(0,0) ----  Coefficient =  0.9956
               Response Ratio = 0.00000 + 0.14519 *A

 ---------------------------------------------------------------------------
 (#) = Out of Range
```

Initial Calibration Summary

Job Number: F77897
Account: TETTNOAK Tetra Tech, Inc
Project: Holloman AFB; Alamogordo, NM

Sample: VF1347-ICC1347
Lab FileID: F045996.D

8260FW.M Tue Nov 23 09:52:31 2010

Initial Calibration Verification

Job Number: F77897
Account: TETTNOAK Tetra Tech, Inc
Project: Holloman AFB; Alamogordo, NM

Sample: VF1347-ICV1347
Lab FileID: F045999.D

Evaluate Continuing Calibration Report

```
Data File : C:\MSDCHEM\1\DATA\112210\F045999.D          Vial: 7
Acq On    : 22 Nov 2010   3:44 pm                   Operator: StevenH
Sample    : icv1347-3                               Inst    : MSVOA9
Misc      : ms15845,vf1347,,,,,                     Multiplr: 1.00
MS Integration Params: rteint.p

Method       : C:\MSDCHEM\1\METHODS\8260FW.M (RTE Integrator)
Title        : SW-846 Method 5035A/8260B
Last Update  : Tue Nov 23 08:44:36 2010
Response via : Multiple Level Calibration

Min. RRF     :   0.001  Min. Rel. Area :  50%  Max. R.T. Dev  0.50min
Max. RRF Dev :  20%     Max. Rel. Area : 200%
```

	Compound	AvgRF	CCRF	%Dev	Area%	Dev(min)	R.T.
1 I	Fluorobenzene	1.000	1.000	0.0	123	0.00	10.30
2	Dichlorodifluoromethane	0.503	0.223	55.7#	55	0.00	4.27
3 P	Chloromethane	0.869	0.622	28.4#	89	0.00	4.59
4 C	Vinyl Chloride	0.601	0.388	35.4#	79	0.00	4.78
	----------	Amount	Calc.	%Drift		----------	
5	Bromomethane	40.000	26.591	33.5#	91	0.00	5.33
6	Chloroethane	40.000	26.762	33.1#	86	0.00	5.53
	----------	AvgRF	CCRF	%Dev		----------	
7	Trichlorofluoromethane	0.656	0.555	15.4	104	0.00	5.81
8	Ethyl Ether	0.310	0.259	16.5	104	0.00	6.15
	----------	Amount	Calc.	%Drift		----------	
9	1,2-Dichlorotrifluoroetha	40.000	37.403	6.5	120	-0.01	6.41
	----------	AvgRF	CCRF	%Dev		----------	
10 C	1,1-Dichloroethene	0.653	0.502	23.1#	95	0.00	6.50
	----------	Amount	Calc.	%Drift		----------	
11	Freon 113	40.000	31.368	21.6#	100	0.00	6.56
	----------	AvgRF	CCRF	%Dev		----------	
12	Carbon Disulfide	1.155	0.794	31.3#	85	0.00	6.62
13	Iodomethane	0.645	0.528	18.1	101	0.00	6.74
14	Allyl chloride	0.858	0.781	9.0	116	0.00	7.11
	----------	Amount	Calc.	%Drift		----------	
15	Methylene Chloride	40.000	39.409	1.5	122	0.00	7.26
	----------	AvgRF	CCRF	%Dev		----------	
16	Acetone	0.310	0.170	45.2#	72	0.00	7.30
17	Methyl acetate	0.353	0.349	1.1	123	0.00	7.42
18	trans-1,2-Dichloroethene	0.645	0.606	6.0	122	0.00	7.47
	----------	Amount	Calc.	%Drift		----------	
19	Hexane	40.000	41.047	-2.6	124	0.00	7.52
	----------	AvgRF	CCRF	%Dev		----------	
20	Methyl Tert Butyl Ether	1.075	1.111	-3.3	128	0.00	7.57
21	Acetonitrile	0.066	0.056	15.2	113	0.00	7.90
22	Di-isopropyl ether	1.700	1.720	-1.2	125	0.00	7.99

Initial Calibration Verification

Job Number: F77897
Account: TETTNOAK Tetra Tech, Inc
Project: Holloman AFB; Alamogordo, NM

Sample: VF1347-ICV1347
Lab FileID: F045999.D

23		Chloroprene	0.683	0.689	-0.9	124	0.00	8.20
24	P	1,1-Dichloroethane	0.744	0.713	4.2	120	0.00	8.23
25		Acrylonitrile	0.182	0.169	7.1	114	0.00	8.27
26		ETBE	1.425	1.402	1.6	117	0.00	8.44
27		Vinyl acetate	0.946	0.812	14.2	101	0.00	8.45
28		cis-1,2-Dichloroethene	0.385	0.393	-2.1	130	0.00	8.88
29		2,2-Dichloropropane	0.557	0.549	1.4	124	0.00	9.02
30		Bromochloromethane	0.213	0.202	5.2	119	0.00	9.11
31		Cyclohexane	0.671	0.659	1.8	120	0.00	9.17
32	C	Chloroform	0.687	0.690	-0.4	125	0.00	9.16
33		Ethyl acetate	0.618	0.347	43.9#	68	0.00	9.22
34		Tetrahydrofuran	0.152	0.147	3.3	122	0.00	9.38
35	S	Dibromofluoromethane	0.286	0.283	1.0	123	0.00	9.38
36		Carbon Tetrachloride	0.586	0.596	-1.7	126	0.00	9.39
37		1,1,1-Trichloroethane	0.592	0.589	0.5	125	0.00	9.46
38		2-Butanone	0.338	0.247	26.9#	90	0.00	9.49
39		1,1-Dichloropropene	0.479	0.488	-1.9	127	0.00	9.58
40		Propionitrile	0.071	0.063	11.3	110	0.00	9.85
41		Methacrylonitrile	0.386	0.339	12.2	110	0.00	9.87
42		Benzene	1.437	1.389	3.3	115	0.00	9.87
43		TAME	1.155	1.152	0.3	119	0.00	9.92
44	S	1,2-Dichloroethane-d4	0.349	0.339	2.9	118	0.00	10.01
45		1,2-Dichloroethane	0.634	0.604	4.7	119	0.00	10.08
46		Trichloroethene	0.391	0.393	-0.5	129	0.00	10.50
47		Methylcyclohexane	0.437	0.461	-5.5	131	0.00	10.52
48		Dibromomethane	0.252	0.253	-0.4	130	0.00	10.98
49	C	1,2-Dichloropropane	0.394	0.401	-1.8	125	0.00	11.08
50		Bromodichloromethane	0.503	0.492	2.2	124	0.00	11.12
51		Methyl methacrylate	0.434	0.417	3.9	116	0.00	11.20
		----------	Amount	Calc.	%Drift		----------	
52		2-Chloroethyl vinyl ether	200.000	184.419	7.8	119	0.00	11.66
		----------	AvgRF	CCRF	%Dev		----------	
53		cis-1,3-Dichloropropene	0.614	0.629	-2.4	130	0.00	11.79
54	I	Chlorobenzene-d5	1.000	1.000	0.0	115	0.00	13.70
55	S	Toluene-d8	1.144	1.175	-2.7	123	0.00	12.00
56	C	Toluene	1.819	1.899	-4.4	124	0.00	12.06
57		2-Nitropropane	0.139	0.145	-4.3	117	0.00	12.30
58		4-Methyl-2-pentanone	0.646	0.623	3.6	110	0.00	12.40
59		trans-1,3-Dichloropropene	0.658	0.753	-14.4	133	0.00	12.47
60		Tetrachloroethene	0.436	0.452	-3.7	127	0.00	12.51
61		Ethyl methacrylate	0.596	0.605	-1.5	115	0.00	12.55
62		1,1,2-Trichloroethane	0.350	0.363	-3.7	126	0.00	12.66
63		Dibromochloromethane	0.458	0.493	-7.6	126	0.00	12.88
64		1,3-Dichloropropane	0.699	0.726	-3.9	126	0.00	12.98
65		1,2-Dibromoethane	0.420	0.440	-4.8	123	0.00	13.19
66		2-hexanone	0.568	0.456	19.7	88	0.00	13.28
67		1-Chlorohexane	0.542	0.588	-8.5	130	0.00	13.62
68	C	Ethylbenzene	2.164	2.207	-2.0	119	0.00	13.70
69	P	Chlorobenzene	1.302	1.332	-2.3	121	0.00	13.72
70		1,1,1,2-Tetrachloroethane	0.503	0.524	-4.2	125	0.00	13.76
71		m,p-Xylene	1.645	1.723	-4.7	119	0.00	13.84
72		o-Xylene	1.733	1.856	-7.1	122	0.00	14.32
73		Styrene	1.241	1.359	-9.5	120	0.00	14.37
74	P	Bromoform	0.306	0.330	-7.8	119	0.00	14.46
75		Isopropylbenzene	1.607	1.974	-22.8#	139	0.00	14.64
76	I	1,4-Dichlorobenzene-d4	1.000	1.000	0.0	110	0.00	16.20

Initial Calibration Verification

Job Number: F77897
Account: TETTNOAK Tetra Tech, Inc
Project: Holloman AFB; Alamogordo, NM

Sample: VF1347-ICV1347
Lab FileID: F045999.D

77	S	4-Bromofluorobenzene	0.916	0.945	-3.2	116	0.00	14.99
		----------	Amount	Calc.	%Drift			
78		cis-1,4-Dichloro-2-butene	40.000	43.437	-8.6	124	0.00	15.01
		----------	AvgRF	CCRF	%Dev			
79		n-Propylbenzene	4.136	4.406	-6.5	119	0.00	15.08
80		Bromobenzene	1.044	1.053	-0.9	117	0.00	15.13
81	P	1,1,2,2-Tetrachloroethane	1.058	1.105	-4.4	119	0.00	15.14
82		1,3,5-Trimethylbenzene	2.806	2.988	-6.5	118	0.00	15.26
83		2-Chlorotoluene	2.842	2.997	-5.5	118	0.00	15.30
		----------	Amount	Calc.	%Drift			
84		trans-1,4-Dichloro-2-Bute	40.000	42.837	-7.1	125	0.00	15.34
		----------	AvgRF	CCRF	%Dev			
85		1,2,3-Trichloropropane	0.294	0.279	5.1	110	0.00	15.33
		----------	Amount	Calc.	%Drift			
86		Cyclohexanone	200.000	195.598	2.2	115	0.00	15.43
		----------	AvgRF	CCRF	%Dev			
87		4-Chlorotoluene	2.794	2.991	-7.1	119	0.00	15.48
88		tert-Butylbenzene	1.678	1.806	-7.6	120	0.00	15.63
89		1,2,4-Trimethylbenzene	2.959	3.230	-9.2	119	0.00	15.70
90		Pentachloroethane	0.564	0.573	-1.6	112	0.00	15.70
91		sec-Butylbenzene	3.276	3.403	-3.9	119	0.00	15.82
92		4-Isopropyltoluene	2.705	2.933	-8.4	121	0.00	15.95
93		1,3-Dichlorobenzene	1.903	1.970	-3.5	117	0.00	16.13
94		1,4-Dichlorobenzene	2.053	2.044	0.4	117	0.00	16.22
95		n-Butylbenzene	1.527	1.719	-12.6	119	0.00	16.42
96		Benzyl Chloride	0.447	0.484	-8.3	121	0.00	16.46
97		1,2-Dichlorobenzene	1.958	1.983	-1.3	114	0.00	16.69
98		1,2-Dibromo-3-Chloropropa	0.198	0.224	-13.1	122	0.00	17.52
		----------	Amount	Calc.	%Drift			
99		Hexachlorobutadiene	40.000	45.741	-14.4	130	0.00	18.18
100		1,2,4-Trichlorobenzene	40.000	43.295	-8.2	121	0.00	18.26
101		Naphthalene	40.000	43.116	-7.8	123	0.00	18.64
102		1,2,3-Trichlorobenzene	40.000	43.577	-8.9	122	0.00	18.87
		----------	AvgRF	CCRF	%Dev			
103	I	Tert Butyl Alcohol-d10	1.000	1.000	0.0	133	0.00	7.52
		----------	Amount	Calc.	%Drift			
104		Ethanol	800.000	545.478	31.8#	103	0.00	6.32
105		Acrolein	200.000	106.350	46.8#	68	0.00	6.93
		----------	AvgRF	CCRF	%Dev			
106		Tert butyl alcohol	1.796	1.612	10.2	126	0.00	7.61
107		Isobutyl alcohol	0.769	0.584	24.1#	115	0.00	9.92
108		Tert Amyl Alcohol	1.444	1.339	7.3	127	0.00	10.06
		----------	Amount	Calc.	%Drift			
109		1,4-Dioxane	800.000	784.597	1.9	119	0.00	11.31

(#) = Out of Range SPCC's out = 0 CCC's out = 2

Initial Calibration Verification

Job Number: F77897
Account: TETTNOAK Tetra Tech, Inc
Project: Holloman AFB; Alamogordo, NM

Sample: VF1347-ICV1347
Lab FileID: F045999.D

F045996.D 8260FW.M Tue Nov 23 09:52:01 2010

Continuing Calibration Summary

Job Number: F77897
Account: TETTNOAK Tetra Tech, Inc
Project: Holloman AFB; Alamogordo, NM

Sample: VF1348-CC1347
Lab FileID: F046023.D

Evaluate Continuing Calibration Report

Data File : C:\MSDCHEM\1\DATA\112310\F046023.D Vial: 4
Acq On : 23 Nov 2010 9:55 am Operator: StevenH
Sample : cc1347-4 Inst : MSVOA9
Misc : ms15845,vf1348,,,,, Multiplr: 1.00
MS Integration Params: rteint.p

Method : C:\MSDCHEM\1\METHODS\8260FW.M (RTE Integrator)
Title : SW-846 Method 5035A/8260B
Last Update : Wed Nov 24 08:20:57 2010
Response via : Multiple Level Calibration

Min. RRF : 0.001 Min. Rel. Area : 50% Max. R.T. Dev 0.50min
Max. RRF Dev : 20% Max. Rel. Area : 200%

	Compound	AvgRF	CCRF	%Dev	Area%	Dev(min)	R.T.
1 I	Fluorobenzene	1.000	1.000	0.0	104	0.00	10.31
2	Dichlorodifluoromethane	0.465	0.452	2.8	97	0.00	4.26
3 P	Chloromethane	0.855	0.760	11.1	93	0.00	4.59
4 C	Vinyl Chloride	0.693	0.646	6.8	98	0.00	4.78
		Amount	Calc.	%Drift			
5	Bromomethane	40.000	46.709	-16.8	93	0.00	5.34
		AvgRF	CCRF	%Dev			
6	Chloroethane	0.310	0.290	6.5	98	0.00	5.53
7	Trichlorofluoromethane	0.729	0.725	0.5	103	0.00	5.80
8	Ethyl Ether	0.346	0.327	5.5	98	0.00	6.15
9	1,2-Dichlorotrifluoroetha	0.483	0.452	6.4	106	0.00	6.41
10 C	1,1-Dichloroethene	0.733	0.694	5.3	101	0.00	6.50
11	Freon 113	0.362	0.371	-2.5	104	0.01	6.56
12	Carbon Disulfide	1.315	1.270	3.4	103	0.00	6.60
13	Iodomethane	0.704	0.682	3.1	102	0.00	6.74
14	Allyl chloride	0.841	0.808	3.9	107	0.00	7.12
		Amount	Calc.	%Drift			
15	Methylene Chloride	40.000	45.549	-13.9	111	0.00	7.26
		AvgRF	CCRF	%Dev			
16	Acetone	0.289	0.275	4.8	106	0.00	7.29
17	Methyl acetate	0.346	0.312	9.8	97	0.00	7.42
18	trans-1,2-Dichloroethene	0.615	0.601	2.3	103	0.00	7.47
		Amount	Calc.	%Drift			
19	Hexane	40.000	40.130	-0.3	101	0.00	7.53
		AvgRF	CCRF	%Dev			
20	Methyl Tert Butyl Ether	1.049	0.978	6.8	97	0.00	7.57
		Amount	Calc.	%Drift			
21	Acetonitrile	400.000	342.210	14.4	63	0.00	7.91
		AvgRF	CCRF	%Dev			
22	Di-isopropyl ether	1.589	1.600	-0.7	102	0.00	7.99
23	Chloroprene	0.653	0.660	-1.1	105	0.00	8.20
24 P	1,1-Dichloroethane	0.731	0.704	3.7	103	0.00	8.24
25	Acrylonitrile	0.177	0.171	3.4	102	0.00	8.28
26	ETBE	1.362	1.375	-1.0	101	0.00	8.44

Continuing Calibration Summary

Job Number: F77897
Account: TETTNOAK Tetra Tech, Inc
Project: Holloman AFB; Alamogordo, NM

Sample: VF1348-CC1347
Lab FileID: F046023.D

27		Vinyl acetate	0.935	0.963	-3.0	101	0.00	8.45
28		cis-1,2-Dichloroethene	0.383	0.372	2.9	103	0.00	8.88
29		2,2-Dichloropropane	0.531	0.518	2.4	103	0.01	9.04
30		Bromochloromethane	0.215	0.212	1.4	100	0.00	9.12
		----------	Amount	Calc.	%Drift	----------		
31		Cyclohexane	40.000	38.399	4.0	101	0.00	9.17
		----------	AvgRF	CCRF	%Dev	----------		
32	C	Chloroform	0.690	0.659	4.5	101	0.00	9.16
33		Ethyl acetate	0.580	0.566	2.4	98	0.00	9.22
		----------	Amount	Calc.	%Drift	----------		
34		Tetrahydrofuran	40.000	32.259	19.4	99	0.00	9.39
		----------	AvgRF	CCRF	%Dev	----------		
35	S	Dibromofluoromethane	0.294	0.289	1.7	103	0.00	9.38
36		Carbon Tetrachloride	0.606	0.590	2.6	103	0.00	9.39
37		1,1,1-Trichloroethane	0.582	0.570	2.1	102	0.00	9.46
38		2-Butanone	0.315	0.308	2.2	101	0.00	9.49
39		1,1-Dichloropropene	0.457	0.456	0.2	100	0.00	9.59
40		Propionitrile	0.065	0.064	1.5	102	0.00	9.85
41		Methacrylonitrile	0.382	0.376	1.6	99	0.00	9.88
42		Benzene	1.465	1.416	3.3	101	0.00	9.87
43		TAME	1.114	1.096	1.6	100	0.00	9.92
44	S	1,2-Dichloroethane-d4	0.346	0.343	0.9	103	0.00	10.01
45		1,2-Dichloroethane	0.624	0.602	3.5	102	0.00	10.08
46		Trichloroethene	0.383	0.370	3.4	103	0.00	10.50
47		Methylcyclohexane	0.404	0.418	-3.5	103	0.00	10.53
48		Dibromomethane	0.254	0.239	5.9	101	0.00	10.99
49	C	1,2-Dichloropropane	0.383	0.383	0.0	101	0.00	11.08
50		Bromodichloromethane	0.491	0.475	3.3	102	0.00	11.12
		----------	Amount	Calc.	%Drift	----------		
51		Methyl methacrylate	40.000	36.402	9.0	93	0.00	11.20
52		2-Chloroethyl vinyl ether	200.000	185.499	7.3	98	0.00	11.66
		----------	AvgRF	CCRF	%Dev	----------		
53		cis-1,3-Dichloropropene	0.589	0.564	4.2	97	0.00	11.80
54	I	Chlorobenzene-d5	1.000	1.000	0.0	102	0.00	13.70
55	S	Toluene-d8	1.103	1.101	0.2	102	0.00	12.00
56	C	Toluene	1.762	1.710	3.0	99	0.00	12.07
57		2-Nitropropane	0.135	0.130	3.7	92	0.00	12.30
58		4-Methyl-2-pentanone	0.598	0.607	-1.5	98	0.00	12.41
59		trans-1,3-Dichloropropene	0.615	0.621	-1.0	100	0.00	12.47
60		Tetrachloroethene	0.443	0.413	6.8	98	0.00	12.51
		----------	Amount	Calc.	%Drift	----------		
61		Ethyl methacrylate	40.000	38.161	4.6	99	0.00	12.56
		----------	AvgRF	CCRF	%Dev	----------		
62		1,1,2-Trichloroethane	0.337	0.323	4.2	99	0.00	12.67
63		Dibromochloromethane	0.465	0.440	5.4	96	0.00	12.89
64		1,3-Dichloropropane	0.659	0.624	5.3	97	0.00	12.98
65		1,2-Dibromoethane	0.404	0.390	3.5	97	0.00	13.19
66		2-hexanone	0.522	0.565	-8.2	102	0.00	13.29
67		1-Chlorohexane	0.488	0.508	-4.1	97	0.00	13.62
68	C	Ethylbenzene	2.067	2.054	0.6	100	0.00	13.70
69	P	Chlorobenzene	1.299	1.225	5.7	98	0.00	13.72

Continuing Calibration Summary

Job Number: F77897
Account: TETTNOAK Tetra Tech, Inc
Project: Holloman AFB; Alamogordo, NM

Sample: VF1348-CC1347
Lab FileID: F046023.D

70		1,1,1,2-Tetrachloroethane	0.491	0.493	-0.4	103	0.00	13.77
71		m,p-Xylene	1.547	1.600	-3.4	99	0.00	13.84
		----------	Amount	Calc.	%Drift		----------	
72		o-Xylene	40.000	38.004	5.0	98	0.00	14.32
73		Styrene	40.000	41.298	-3.2	103	0.00	14.37
		----------	AvgRF	CCRF	%Dev		----------	
74	P	Bromoform	0.310	0.300	3.2	94	0.00	14.46
		----------	Amount	Calc.	%Drift		----------	
75		Isopropylbenzene	40.000	39.012	2.5	100	0.00	14.64
		----------	AvgRF	CCRF	%Dev		----------	
76	I	1,4-Dichlorobenzene-d4	1.000	1.000	0.0	105	0.00	16.21
77	S	4-Bromofluorobenzene	0.856	0.847	1.1	104	0.00	14.99
		----------	Amount	Calc.	%Drift		----------	
78		cis-1,4-Dichloro-2-butene	40.000	60.536	-51.3#	125	0.00	15.01
		----------	AvgRF	CCRF	%Dev		----------	
79		n-Propylbenzene	3.873	3.865	0.2	103	0.00	15.08
80		Bromobenzene	1.012	0.958	5.3	101	0.00	15.14
81	P	1,1,2,2-Tetrachloroethane	0.990	0.938	5.3	98	0.00	15.15
		----------	Amount	Calc.	%Drift		----------	
82		1,3,5-Trimethylbenzene	40.000	36.949	7.6	100	0.00	15.26
		----------	AvgRF	CCRF	%Dev		----------	
83		2-Chlorotoluene	2.617	2.576	1.6	100	0.00	15.30
		----------	Amount	Calc.	%Drift		----------	
84		trans-1,4-Dichloro-2-Bute	40.000	55.608	-39.0#	116	0.00	15.34
		----------	AvgRF	CCRF	%Dev		----------	
85		1,2,3-Trichloropropane	0.271	0.257	5.2	95	0.00	15.34
		----------	Amount	Calc.	%Drift		----------	
86		Cyclohexanone	200.000	160.973	19.5	114	0.00	15.42
		----------	AvgRF	CCRF	%Dev		----------	
87		4-Chlorotoluene	2.547	2.646	-3.9	102	0.00	15.48
88		tert-Butylbenzene	1.496	1.524	-1.9	98	0.00	15.63
89		1,2,4-Trimethylbenzene	2.856	2.793	2.2	103	0.00	15.70
90		Pentachloroethane	0.574	0.575	-0.2	108	0.00	15.70
91		sec-Butylbenzene	2.866	2.907	-1.4	99	0.00	15.83
92		4-Isopropyltoluene	2.398	2.520	-5.1	102	0.00	15.95
93		1,3-Dichlorobenzene	1.839	1.759	4.4	101	0.00	16.13
94		1,4-Dichlorobenzene	2.026	1.841	9.1	101	0.00	16.22
		----------	Amount	Calc.	%Drift		----------	
95		n-Butylbenzene	40.000	39.713	0.7	103	0.00	16.42
		----------	AvgRF	CCRF	%Dev		----------	
96		Benzyl Chloride	0.409	0.420	-2.7	102	0.00	16.46
97		1,2-Dichlorobenzene	1.897	1.791	5.6	100	0.00	16.70
98		1,2-Dibromo-3-Chloropropa	0.189	0.164	13.2	94	0.00	17.52
		----------	Amount	Calc.	%Drift		----------	

Continuing Calibration Summary

Job Number: F77897
Account: TETTNOAK Tetra Tech, Inc
Project: Holloman AFB; Alamogordo, NM

Sample: VF1348-CC1347
Lab FileID: F046023.D

99	Hexachlorobutadiene	40.000	40.042	-0.1	106	0.00	18.18
100	1,2,4-Trichlorobenzene	40.000	38.414	4.0	102	0.00	18.26
	----------	AvgRF	CCRF	%Dev	----------		
101	Naphthalene	2.944	2.589	12.1	95	0.00	18.64
	----------	Amount	Calc.	%Drift	----------		
102	1,2,3-Trichlorobenzene	40.000	36.175	9.6	99	0.00	18.87
	----------	AvgRF	CCRF	%Dev	----------		
103 I	Tert Butyl Alcohol-d10	1.000	1.000	0.0	94	0.01	7.52
	----------	Amount	Calc.	%Drift	----------		
104	Ethanol	800.000	842.097	-5.3	119	0.00	6.32
105	Acrolein	200.000	225.633	-12.8	108	0.00	6.93
	----------	AvgRF	CCRF	%Dev	----------		
106	Tert butyl alcohol	1.723	1.561	9.4	95	0.00	7.61
	----------	Amount	Calc.	%Drift	----------		
107	Isobutyl alcohol	800.000	759.655	5.0	65	0.00	9.92
	----------	AvgRF	CCRF	%Dev	----------		
108	Tert Amyl Alcohol	1.388	1.295	6.7	93	0.00	10.07
	----------	Amount	Calc.	%Drift	----------		
109	1,4-Dioxane	800.000	749.861	6.3	123	0.00	11.31

(#) = Out of Range SPCC's out = 0 CCC's out = 0
F046040.D 8260FW.M Wed Nov 24 09:14:43 2010

Southeast ACCUTEST LABORATORIES

GC/MS Semi-volatiles

QC Data Summaries

Includes the following where applicable:

- Method Blank Summaries
- Blank Spike Summaries
- Matrix Spike and Duplicate Summaries
- Instrument Performance Checks (DFTPP)
- Internal Standard Area Summaries
- Surrogate Recovery Summaries
- Initial and Continuing Calibration Summaries

Method Blank Summary

Job Number: F77897
Account: TETTNOAK Tetra Tech, Inc
Project: Holloman AFB; Alamogordo, NM

Sample	File ID	DF	Analyzed	By	Prep Date	Prep Batch	Analytical Batch
OP35016-MB	U022225.D	1	11/15/10	NAF	11/12/10	OP35016	SU1063

The QC reported here applies to the following samples: **Method:** SW846 8270D

F77897-36, F77897-37, F77897-38

CAS No.	Compound	Result	RL	MDL	Units	Q
83-32-9	Acenaphthene	ND	170	17	ug/kg	
208-96-8	Acenaphthylene	ND	170	17	ug/kg	
120-12-7	Anthracene	ND	170	17	ug/kg	
56-55-3	Benzo(a)anthracene	ND	170	17	ug/kg	
50-32-8	Benzo(a)pyrene	ND	170	17	ug/kg	
205-99-2	Benzo(b)fluoranthene	ND	170	17	ug/kg	
191-24-2	Benzo(g,h,i)perylene	ND	170	17	ug/kg	
207-08-9	Benzo(k)fluoranthene	ND	170	17	ug/kg	
218-01-9	Chrysene	ND	170	17	ug/kg	
53-70-3	Dibenzo(a,h)anthracene	ND	170	17	ug/kg	
206-44-0	Fluoranthene	ND	170	17	ug/kg	
86-73-7	Fluorene	ND	170	17	ug/kg	
193-39-5	Indeno(1,2,3-cd)pyrene	ND	170	17	ug/kg	
90-12-0	1-Methylnaphthalene	ND	170	17	ug/kg	
91-57-6	2-Methylnaphthalene	ND	170	17	ug/kg	
91-20-3	Naphthalene	ND	170	27	ug/kg	
85-01-8	Phenanthrene	ND	170	17	ug/kg	
129-00-0	Pyrene	ND	170	17	ug/kg	

CAS No.	Surrogate Recoveries		Limits
4165-60-0	Nitrobenzene-d5	82%	40-105%
321-60-8	2-Fluorobiphenyl	75%	43-107%
1718-51-0	Terphenyl-d14	81%	45-119%

Method Blank Summary

Job Number: F77897
Account: TETTNOAK Tetra Tech, Inc
Project: Holloman AFB; Alamogordo, NM

Sample	File ID	DF	Analyzed	By	Prep Date	Prep Batch	Analytical Batch
OP35019-MB	U022411.D	1	11/20/10	NAF	11/12/10	OP35019	SU1071

The QC reported here applies to the following samples: **Method:** SW846 8270D

F77897-39

CAS No.	Compound	Result	RL	MDL	Units	Q
83-32-9	Acenaphthene	ND	5.0	0.50	ug/l	
208-96-8	Acenaphthylene	ND	5.0	0.50	ug/l	
120-12-7	Anthracene	ND	5.0	0.50	ug/l	
56-55-3	Benzo(a)anthracene	ND	5.0	0.50	ug/l	
50-32-8	Benzo(a)pyrene	ND	5.0	0.50	ug/l	
205-99-2	Benzo(b)fluoranthene	ND	5.0	0.50	ug/l	
191-24-2	Benzo(g,h,i)perylene	ND	5.0	0.50	ug/l	
207-08-9	Benzo(k)fluoranthene	ND	5.0	0.50	ug/l	
218-01-9	Chrysene	ND	5.0	0.50	ug/l	
53-70-3	Dibenzo(a,h)anthracene	ND	5.0	0.52	ug/l	
206-44-0	Fluoranthene	ND	5.0	0.50	ug/l	
86-73-7	Fluorene	ND	5.0	0.50	ug/l	
193-39-5	Indeno(1,2,3-cd)pyrene	ND	5.0	0.50	ug/l	
90-12-0	1-Methylnaphthalene	ND	5.0	0.50	ug/l	
91-57-6	2-Methylnaphthalene	ND	5.0	0.57	ug/l	
91-20-3	Naphthalene	ND	5.0	0.80	ug/l	
85-01-8	Phenanthrene	ND	5.0	0.50	ug/l	
129-00-0	Pyrene	ND	5.0	0.50	ug/l	

CAS No.	Surrogate Recoveries		Limits
367-12-4	2-Fluorophenol	39%	14-62%
4165-62-2	Phenol-d5	25%	10-40%
118-79-6	2,4,6-Tribromophenol	80%	33-118%
4165-60-0	Nitrobenzene-d5	84%	42-108%
321-60-8	2-Fluorobiphenyl	74%	40-106%
1718-51-0	Terphenyl-d14	87%	39-121%

CAS No.	Tentatively Identified Compounds	R.T.	Est. Conc.	Units	Q
	Total TIC, Semi-Volatile [a]		0	ug/l	

(a) No TICs detected.

Method Blank Summary

Job Number: F77897
Account: TETTNOAK Tetra Tech, Inc
Project: Holloman AFB; Alamogordo, NM

Sample	File ID	DF	Analyzed	By	Prep Date	Prep Batch	Analytical Batch
OP35019-MB	U022451.D	1	11/22/10	NAF	11/12/10	OP35019	SU1072

The QC reported here applies to the following samples: **Method:** SW846 8270D

F77897-39

CAS No.	Compound	Result	RL	MDL	Units	Q

CAS No.	Surrogate Recoveries		Limits
367-12-4	2-Fluorophenol	42%	14-62%
4165-62-2	Phenol-d5	27%	10-40%
118-79-6	2,4,6-Tribromophenol	85%	33-118%
4165-60-0	Nitrobenzene-d5	79%	42-108%
321-60-8	2-Fluorobiphenyl	82%	40-106%
1718-51-0	Terphenyl-d14	99%	39-121%

Method Blank Summary

Job Number: F77897
Account: TETTNOAK Tetra Tech, Inc
Project: Holloman AFB; Alamogordo, NM

Sample	File ID	DF	Analyzed	By	Prep Date	Prep Batch	Analytical Batch
OP35019-MB	U022531.D	1	11/24/10	NAF	11/12/10	OP35019	SU1075

The QC reported here applies to the following samples: **Method:** SW846 8270D

F77897-39

CAS No.	Compound	Result	RL	MDL	Units	Q
83-32-9	Acenaphthene	ND	5.0	0.50	ug/l	
208-96-8	Acenaphthylene	ND	5.0	0.50	ug/l	
120-12-7	Anthracene	ND	5.0	0.50	ug/l	
56-55-3	Benzo(a)anthracene	ND	5.0	0.50	ug/l	
50-32-8	Benzo(a)pyrene	ND	5.0	0.50	ug/l	
205-99-2	Benzo(b)fluoranthene	ND	5.0	0.50	ug/l	
191-24-2	Benzo(g,h,i)perylene	ND	5.0	0.50	ug/l	
207-08-9	Benzo(k)fluoranthene	ND	5.0	0.50	ug/l	
218-01-9	Chrysene	ND	5.0	0.50	ug/l	
53-70-3	Dibenzo(a,h)anthracene	ND	5.0	0.52	ug/l	
206-44-0	Fluoranthene	ND	5.0	0.50	ug/l	
86-73-7	Fluorene	ND	5.0	0.50	ug/l	
193-39-5	Indeno(1,2,3-cd)pyrene	ND	5.0	0.50	ug/l	
90-12-0	1-Methylnaphthalene	ND	5.0	0.50	ug/l	
91-57-6	2-Methylnaphthalene	ND	5.0	0.57	ug/l	
91-20-3	Naphthalene	ND	5.0	0.80	ug/l	
85-01-8	Phenanthrene	ND	5.0	0.50	ug/l	
129-00-0	Pyrene	ND	5.0	0.50	ug/l	

CAS No.	Surrogate Recoveries		Limits
367-12-4	2-Fluorophenol	40%	14-62%
4165-62-2	Phenol-d5	25%	10-40%
118-79-6	2,4,6-Tribromophenol	81%	33-118%
4165-60-0	Nitrobenzene-d5	83%	42-108%
321-60-8	2-Fluorobiphenyl	76%	40-106%
1718-51-0	Terphenyl-d14	91%	39-121%

CAS No.	Tentatively Identified Compounds	R.T.	Est. Conc.	Units	Q
	Total TIC, Semi-Volatile		0	ug/l	

Method Blank Summary

Job Number: F77897
Account: TETTNOAK Tetra Tech, Inc
Project: Holloman AFB; Alamogordo, NM

Sample	File ID	DF	Analyzed	By	Prep Date	Prep Batch	Analytical Batch
OP35019-MB	L049120.D	1	11/24/10	NAF	11/12/10	OP35019	SL2516

The QC reported here applies to the following samples: **Method:** SW846 8270D

F77897-39

CAS No.	Compound	Result	RL	MDL	Units	Q
83-32-9	Acenaphthene	ND	5.0	0.50	ug/l	
208-96-8	Acenaphthylene	ND	5.0	0.50	ug/l	
120-12-7	Anthracene	ND	5.0	0.50	ug/l	
56-55-3	Benzo(a)anthracene	ND	5.0	0.50	ug/l	
50-32-8	Benzo(a)pyrene	ND	5.0	0.50	ug/l	
205-99-2	Benzo(b)fluoranthene	ND	5.0	0.50	ug/l	
191-24-2	Benzo(g,h,i)perylene	ND	5.0	0.50	ug/l	
207-08-9	Benzo(k)fluoranthene	ND	5.0	0.50	ug/l	
218-01-9	Chrysene	ND	5.0	0.50	ug/l	
53-70-3	Dibenzo(a,h)anthracene	ND	5.0	0.52	ug/l	
206-44-0	Fluoranthene	ND	5.0	0.50	ug/l	
86-73-7	Fluorene	ND	5.0	0.50	ug/l	
193-39-5	Indeno(1,2,3-cd)pyrene	ND	5.0	0.50	ug/l	
90-12-0	1-Methylnaphthalene	ND	5.0	0.50	ug/l	
91-57-6	2-Methylnaphthalene	ND	5.0	0.57	ug/l	
91-20-3	Naphthalene	ND	5.0	0.80	ug/l	
85-01-8	Phenanthrene	ND	5.0	0.50	ug/l	
129-00-0	Pyrene	ND	5.0	0.50	ug/l	

CAS No.	Surrogate Recoveries		Limits
367-12-4	2-Fluorophenol	44%	14-62%
4165-62-2	Phenol-d5	29%	10-40%
118-79-6	2,4,6-Tribromophenol	88%	33-118%
4165-60-0	Nitrobenzene-d5	80%	42-108%
321-60-8	2-Fluorobiphenyl	82%	40-106%
1718-51-0	Terphenyl-d14	86%	39-121%

CAS No.	Tentatively Identified Compounds	R.T.	Est. Conc.	Units	Q
	Total TIC, Semi-Volatile		0	ug/l	

Blank Spike Summary

Job Number: F77897
Account: TETTNOAK Tetra Tech, Inc
Project: Holloman AFB; Alamogordo, NM

Sample	File ID	DF	Analyzed	By	Prep Date	Prep Batch	Analytical Batch
OP35016-BS	U022224.D	1	11/15/10	NAF	11/12/10	OP35016	SU1063

The QC reported here applies to the following samples: **Method:** SW846 8270D

F77897-36, F77897-37, F77897-38

CAS No.	Compound	Spike ug/kg	BSP ug/kg	BSP %	Limits
83-32-9	Acenaphthene	1670	1310	79	59-97
208-96-8	Acenaphthylene	1670	1290	77	58-98
120-12-7	Anthracene	1670	1310	79	61-104
56-55-3	Benzo(a)anthracene	1670	1300	78	60-106
50-32-8	Benzo(a)pyrene	1670	1260	76	59-102
205-99-2	Benzo(b)fluoranthene	1670	1260	76	60-107
191-24-2	Benzo(g,h,i)perylene	1670	1370	82	56-103
207-08-9	Benzo(k)fluoranthene	1670	1350	81	61-107
218-01-9	Chrysene	1670	1330	80	60-107
53-70-3	Dibenzo(a,h)anthracene	1670	1310	79	57-105
206-44-0	Fluoranthene	1670	1320	79	60-110
86-73-7	Fluorene	1670	1330	80	60-99
193-39-5	Indeno(1,2,3-cd)pyrene	1670	1170	70	57-104
90-12-0	1-Methylnaphthalene	1670	1450	87	55-93
91-57-6	2-Methylnaphthalene	1670	1430	86	57-103
91-20-3	Naphthalene	1670	1440	86	54-93
85-01-8	Phenanthrene	1670	1330	80	61-103
129-00-0	Pyrene	1670	1330	80	58-109

CAS No.	Surrogate Recoveries	BSP	Limits
4165-60-0	Nitrobenzene-d5	80%	40-105%
321-60-8	2-Fluorobiphenyl	76%	43-107%
1718-51-0	Terphenyl-d14	80%	45-119%

Blank Spike Summary

Job Number: F77897
Account: TETTNOAK Tetra Tech, Inc
Project: Holloman AFB; Alamogordo, NM

Sample	File ID	DF	Analyzed	By	Prep Date	Prep Batch	Analytical Batch
OP35019-BS	U022410.D	1	11/20/10	NAF	11/12/10	OP35019	SU1071

The QC reported here applies to the following samples: **Method:** SW846 8270D

F77897-39

CAS No.	Compound	Spike ug/l	BSP ug/l	BSP %	Limits
83-32-9	Acenaphthene	50	41.1	82	58-106
208-96-8	Acenaphthylene	50	40.2	80	58-105
120-12-7	Anthracene	50	42.6	85	65-108
56-55-3	Benzo(a)anthracene	50	43.8	88	63-111
50-32-8	Benzo(a)pyrene	50	42.8	86	62-106
205-99-2	Benzo(b)fluoranthene	50	44.2	88	63-109
191-24-2	Benzo(g,h,i)perylene	50	46.5	93	61-111
207-08-9	Benzo(k)fluoranthene	50	41.0	82	64-111
218-01-9	Chrysene	50	42.5	85	64-111
53-70-3	Dibenzo(a,h)anthracene	50	50.5	101	62-112
206-44-0	Fluoranthene	50	42.0	84	65-114
86-73-7	Fluorene	50	41.4	83	61-106
193-39-5	Indeno(1,2,3-cd)pyrene	50	54.6	109	61-113
90-12-0	1-Methylnaphthalene	50	44.1	88	52-102
91-57-6	2-Methylnaphthalene	50	44.7	89	56-112
91-20-3	Naphthalene	50	43.3	87	50-104
85-01-8	Phenanthrene	50	41.8	84	65-108
129-00-0	Pyrene	50	42.1	84	60-113

CAS No.	Surrogate Recoveries	BSP	Limits
367-12-4	2-Fluorophenol	39%	14-62%
4165-62-2	Phenol-d5	25%	10-40%
118-79-6	2,4,6-Tribromophenol	84%	33-118%
4165-60-0	Nitrobenzene-d5	87%	42-108%
321-60-8	2-Fluorobiphenyl	78%	40-106%
1718-51-0	Terphenyl-d14	83%	39-121%

Blank Spike Summary

Job Number: F77897
Account: TETTNOAK Tetra Tech, Inc
Project: Holloman AFB; Alamogordo, NM

Sample	File ID	DF	Analyzed	By	Prep Date	Prep Batch	Analytical Batch
OP35019-BS	U022530.D	1	11/24/10	NAF	11/12/10	OP35019	SU1075

The QC reported here applies to the following samples: **Method:** SW846 8270D

F77897-39

CAS No.	Compound	Spike ug/l	BSP ug/l	BSP %	Limits
83-32-9	Acenaphthene	50	41.5	83	58-106
208-96-8	Acenaphthylene	50	40.7	81	58-105
120-12-7	Anthracene	50	43.0	86	65-108
56-55-3	Benzo(a)anthracene	50	44.6	89	63-111
50-32-8	Benzo(a)pyrene	50	42.6	85	62-106
205-99-2	Benzo(b)fluoranthene	50	45.2	90	63-109
191-24-2	Benzo(g,h,i)perylene	50	48.7	97	61-111
207-08-9	Benzo(k)fluoranthene	50	41.9	84	64-111
218-01-9	Chrysene	50	43.8	88	64-111
53-70-3	Dibenzo(a,h)anthracene	50	50.8	102	62-112
206-44-0	Fluoranthene	50	41.3	83	65-114
86-73-7	Fluorene	50	42.0	84	61-106
193-39-5	Indeno(1,2,3-cd)pyrene	50	52.3	105	61-113
90-12-0	1-Methylnaphthalene	50	45.1	90	52-102
91-57-6	2-Methylnaphthalene	50	45.8	92	56-112
91-20-3	Naphthalene	50	44.7	89	50-104
85-01-8	Phenanthrene	50	43.2	86	65-108
129-00-0	Pyrene	50	47.1	94	60-113

CAS No.	Surrogate Recoveries	BSP	Limits
367-12-4	2-Fluorophenol	40%	14-62%
4165-62-2	Phenol-d5	24%	10-40%
118-79-6	2,4,6-Tribromophenol	87%	33-118%
4165-60-0	Nitrobenzene-d5	88%	42-108%
321-60-8	2-Fluorobiphenyl	80%	40-106%
1718-51-0	Terphenyl-d14	93%	39-121%

Blank Spike Summary

Job Number: F77897
Account: TETTNOAK Tetra Tech, Inc
Project: Holloman AFB; Alamogordo, NM

Sample	File ID	DF	Analyzed	By	Prep Date	Prep Batch	Analytical Batch
OP35019-BS	L049119.D	1	11/24/10	NAF	11/12/10	OP35019	SL2516

The QC reported here applies to the following samples: **Method:** SW846 8270D

F77897-39

CAS No.	Compound	Spike ug/l	BSP ug/l	BSP %	Limits
83-32-9	Acenaphthene	50	42.7	85	58-106
208-96-8	Acenaphthylene	50	42.3	85	58-105
120-12-7	Anthracene	50	44.1	88	65-108
56-55-3	Benzo(a)anthracene	50	45.7	91	63-111
50-32-8	Benzo(a)pyrene	50	44.8	90	62-106
205-99-2	Benzo(b)fluoranthene	50	45.4	91	63-109
191-24-2	Benzo(g,h,i)perylene	50	46.7	93	61-111
207-08-9	Benzo(k)fluoranthene	50	44.8	90	64-111
218-01-9	Chrysene	50	44.4	89	64-111
53-70-3	Dibenzo(a,h)anthracene	50	48.0	96	62-112
206-44-0	Fluoranthene	50	43.5	87	65-114
86-73-7	Fluorene	50	42.8	86	61-106
193-39-5	Indeno(1,2,3-cd)pyrene	50	48.5	97	61-113
90-12-0	1-Methylnaphthalene	50	41.1	82	52-102
91-57-6	2-Methylnaphthalene	50	43.4	87	56-112
91-20-3	Naphthalene	50	40.3	81	50-104
85-01-8	Phenanthrene	50	44.1	88	65-108
129-00-0	Pyrene	50	45.8	92	60-113

CAS No.	Surrogate Recoveries	BSP	Limits
367-12-4	2-Fluorophenol	45%	14-62%
4165-62-2	Phenol-d5	28%	10-40%
118-79-6	2,4,6-Tribromophenol	90%	33-118%
4165-60-0	Nitrobenzene-d5	85%	42-108%
321-60-8	2-Fluorobiphenyl	81%	40-106%
1718-51-0	Terphenyl-d14	89%	39-121%

Matrix Spike/Matrix Spike Duplicate Summary

Job Number: F77897
Account: TETTNOAK Tetra Tech, Inc
Project: Holloman AFB; Alamogordo, NM

Sample	File ID	DF	Analyzed	By	Prep Date	Prep Batch	Analytical Batch
OP35016-MS	U022236.D	1	11/15/10	NAF	11/12/10	OP35016	SU1063
OP35016-MSD	U022237.D	1	11/15/10	NAF	11/12/10	OP35016	SU1063
F77964-10	U022235.D	1	11/15/10	NAF	11/12/10	OP35016	SU1063

The QC reported here applies to the following samples: **Method:** SW846 8270D

F77897-36, F77897-37, F77897-38

CAS No.	Compound	F77964-10 ug/kg	Q	Spike ug/kg	MS ug/kg	MS %	MSD ug/kg	MSD %	RPD	Limits Rec/RPD
83-32-9	Acenaphthene	ND		2070	1660	80	1610	78	3	59-97/29
208-96-8	Acenaphthylene	ND		2070	1620	78	1580	77	3	58-98/30
120-12-7	Anthracene	ND		2070	1700	82	1610	78	5	61-104/29
56-55-3	Benzo(a)anthracene	ND		2070	1740	84	1630	79	7	60-106/31
50-32-8	Benzo(a)pyrene	ND		2070	1680	81	1570	76	7	59-102/32
205-99-2	Benzo(b)fluoranthene	ND		2070	1630	79	1570	76	4	60-107/31
191-24-2	Benzo(g,h,i)perylene	ND		2070	1760	85	1660	81	6	56-103/32
207-08-9	Benzo(k)fluoranthene	ND		2070	1840	89	1650	80	11	61-107/30
218-01-9	Chrysene	ND		2070	1750	85	1640	80	6	60-107/31
53-70-3	Dibenzo(a,h)anthracene	ND		2070	1720	83	1620	79	6	57-105/29
206-44-0	Fluoranthene	ND		2070	1740	84	1620	79	7	60-110/32
86-73-7	Fluorene	ND		2070	1680	81	1640	80	2	60-99/30
193-39-5	Indeno(1,2,3-cd)pyrene	ND		2070	1610	78	1440	70	11	57-104/33
90-12-0	1-Methylnaphthalene	ND		2070	1800	87	1770	86	2	55-93/33
91-57-6	2-Methylnaphthalene	ND		2070	1820	88	1810	88	1	57-103/32
91-20-3	Naphthalene	ND		2070	1810	88	1780	86	2	54-93/32
85-01-8	Phenanthrene	ND		2070	1700	82	1620	79	5	61-103/32
129-00-0	Pyrene	ND		2070	1750	85	1670	81	5	58-109/33

CAS No.	Surrogate Recoveries	MS	MSD	F77964-10	Limits
4165-60-0	Nitrobenzene-d5	81%	83%	77%	40-105%
321-60-8	2-Fluorobiphenyl	77%	77%	73%	43-107%
1718-51-0	Terphenyl-d14	86%	83%	83%	45-119%

Matrix Spike/Matrix Spike Duplicate Summary

Job Number: F77897
Account: TETTNOAK Tetra Tech, Inc
Project: Holloman AFB; Alamogordo, NM

Sample	File ID	DF	Analyzed	By	Prep Date	Prep Batch	Analytical Batch
OP35019-MS	U022421.D	1	11/20/10	NAF	11/12/10	OP35019	SU1071
OP35019-MSD	U022422.D	1	11/20/10	NAF	11/12/10	OP35019	SU1071
F77970-2	U022420.D	1	11/20/10	NAF	11/12/10	OP35019	SU1071

The QC reported here applies to the following samples: **Method:** SW846 8270D

F77897-39

CAS No.	Compound	F77970-2 ug/l	Q	Spike ug/l	MS ug/l	MS %	MSD ug/l	MSD %	RPD	Limits Rec/RPD
83-32-9	Acenaphthene	ND		96.2	65.3	68	82.9	86	24*	58-106/21
208-96-8	Acenaphthylene	ND		96.2	63.7	66	82.1	85	25*	58-105/21
120-12-7	Anthracene	ND		96.2	70.3	73	83.9	87	18	65-108/19
56-55-3	Benzo(a)anthracene	ND		96.2	73.0	76	86.3	90	17	63-111/19
50-32-8	Benzo(a)pyrene	ND		96.2	71.5	74	83.6	87	16	62-106/20
205-99-2	Benzo(b)fluoranthene	ND		96.2	75.0	78	91.0	95	19	63-109/20
191-24-2	Benzo(g,h,i)perylene	ND		96.2	75.9	79	89.9	93	17	61-111/21
207-08-9	Benzo(k)fluoranthene	ND		96.2	65.9	69	75.6	79	14	64-111/20
218-01-9	Chrysene	ND		96.2	70.6	73	83.9	87	17	64-111/19
53-70-3	Dibenzo(a,h)anthracene	ND		96.2	82.4	86	98.0	102	17	62-112/20
206-44-0	Fluoranthene	ND		96.2	69.4	72	82.3	86	17	65-114/21
86-73-7	Fluorene	ND		96.2	67.9	71	83.2	87	20*	61-106/19
193-39-5	Indeno(1,2,3-cd)pyrene	ND		96.2	87.7	91	102	106	15	61-113/20
90-12-0	1-Methylnaphthalene	ND		96.2	69.6	72	89.9	93	25	52-102/25
91-57-6	2-Methylnaphthalene	ND		96.2	69.7	72	90.7	94	26	56-112/26
91-20-3	Naphthalene	ND		96.2	68.8	72	87.6	91	24	50-104/28
85-01-8	Phenanthrene	ND		96.2	69.5	72	83.0	86	18	65-108/20
129-00-0	Pyrene	ND		96.2	71.4	74	83.5	87	16	60-113/20

CAS No.	Surrogate Recoveries	MS	MSD	F77970-2	Limits
367-12-4	2-Fluorophenol	45%	53%	35%	14-62%
4165-62-2	Phenol-d5	33%	38%	23%	10-40%
118-79-6	2,4,6-Tribromophenol	72%	88%	74%	33-118%
4165-60-0	Nitrobenzene-d5	70%	90%	77%	42-108%
321-60-8	2-Fluorobiphenyl	63%	83%	66%	40-106%
1718-51-0	Terphenyl-d14	72%	84%	77%	39-121%

Instrument Performance Check (DFTPP)

Job Number: F77897
Account: TETTNOAK Tetra Tech, Inc
Project: Holloman AFB; Alamogordo, NM

Sample: SL2516-DFTPP
Lab File ID: L049096.D
Instrument ID: GCMSL
Injection Date: 11/24/10
Injection Time: 08:23

m/e	Ion Abundance Criteria	Raw Abundance	% Relative Abundance		Pass/Fail
51	30.0 - 60.0% of mass 198	18532	38.2		Pass
68	Less than 2.0% of mass 69	25	0.05	(0.14) [a]	Pass
69	Mass 69 relative abundance	17453	36.0		Pass
70	Less than 2.0% of mass 69	59	0.12	(0.34) [a]	Pass
127	40.0 - 60.0% of mass 198	21571	44.5		Pass
197	Less than 1.0% of mass 198	93	0.19		Pass
198	Base peak, 100% relative abundance	48460	100.0		Pass
199	5.0 - 9.0% of mass 198	3275	6.76		Pass
275	10.0 - 30.0% of mass 198	10408	21.5		Pass
365	1.0 - 100.0% of mass 198	1054	2.17		Pass
441	Present, but less than mass 443	433	0.89	(6.27) [b]	Pass
442	40.0 - 100.0% of mass 198	34915	72.0		Pass
443	17.0 - 23.0% of mass 442	6907	14.3	(19.8) [c]	Pass

(a) Value is % of mass 69
(b) Value is % of mass 443
(c) Value is % of mass 442

This check applies to the following Samples, MS, MSD, Blanks, and Standards:

Lab Sample ID	Lab File ID	Date Analyzed	Time Analyzed	Hours Lapsed	Client Sample ID
SL2516-IC2516	L049099.D	11/24/10	09:36	01:13	Initial cal 25
SL2516-IC2516	L049100.D	11/24/10	10:04	01:41	Initial cal 5
SL2516-IC2516	L049101.D	11/24/10	10:33	02:10	Initial cal 50
SL2516-ICC2516	L049102.D	11/24/10	11:01	02:38	Initial cal 75
SL2516-IC2516	L049103.D	11/24/10	11:29	03:06	Initial cal 100
SL2516-IC2516	L049104.D	11/24/10	11:57	03:34	Initial cal 125
SL2516-IC2516	L049105.D	11/24/10	12:27	04:04	Initial cal 5
SL2516-IC2516	L049107.D	11/24/10	13:24	05:01	Initial cal 25
SL2516-IC2516	L049108.D	11/24/10	14:47	06:24	Initial cal 10
SL2516-IC2516	L049110.D	11/24/10	15:43	07:20	Initial cal 50
SL2516-IC2516	L049111.D	11/24/10	16:12	07:49	Initial cal 75
SL2516-IC2516	L049112.D	11/24/10	16:40	08:17	Initial cal 100
SL2516-IC2516	L049113.D	11/24/10	17:09	08:46	Initial cal 125
SL2516-IC2516	L049114.D	11/24/10	17:37	09:14	Initial cal 1250
SL2516-IC2516	L049115.D	11/24/10	18:05	09:42	Initial cal 2000
SL2516-ICV2516	L049116.D	11/24/10	18:33	10:10	Initial cal verification 50
SL2516-ICV2516	L049117.D	11/24/10	19:01	10:38	Initial cal verification 50
SL2516-ICV2516	L049118.D	11/24/10	19:29	11:06	Initial cal verification 50
OP35019-BS	L049119.D	11/24/10	19:57	11:34	Blank Spike

Instrument Performance Check (DFTPP)

Job Number: F77897
Account: TETTNOAK Tetra Tech, Inc
Project: Holloman AFB; Alamogordo, NM

Sample: SL2516-DFTPP
Lab File ID: L049096.D
Instrument ID: GCMSL
Injection Date: 11/24/10
Injection Time: 08:23

Lab Sample ID	Lab File ID	Date Analyzed	Time Analyzed	Hours Lapsed	Client Sample ID
OP35019-MB	L049120.D	11/24/10	20:25	12:02	Method Blank
ZZZZZZ	L049121.D	11/24/10	20:53	12:30	(unrelated sample)

Instrument Performance Check (DFTPP)

Job Number: F77897
Account: TETTNOAK Tetra Tech, Inc
Project: Holloman AFB; Alamogordo, NM

Sample: SU1052-DFTPP
Lab File ID: U021943.D
Instrument ID: GCMSU
Injection Date: 11/08/10
Injection Time: 09:57

m/e	Ion Abundance Criteria	Raw Abundance	% Relative Abundance		Pass/Fail
51	30.0 - 60.0% of mass 198	43522	45.5		Pass
68	Less than 2.0% of mass 69	685	0.72	(1.69) [a]	Pass
69	Mass 69 relative abundance	40507	42.4		Pass
70	Less than 2.0% of mass 69	171	0.18	(0.42) [a]	Pass
127	40.0 - 60.0% of mass 198	50477	52.8		Pass
197	Less than 1.0% of mass 198	0	0.00		Pass
198	Base peak, 100% relative abundance	95581	100.0		Pass
199	5.0 - 9.0% of mass 198	6492	6.79		Pass
275	10.0 - 30.0% of mass 198	21275	22.3		Pass
365	1.0 - 100.0% of mass 198	2512	2.63		Pass
441	Present, but less than mass 443	11194	11.7	(75.8) [b]	Pass
442	40.0 - 100.0% of mass 198	75266	78.7		Pass
443	17.0 - 23.0% of mass 442	14775	15.5	(19.6) [c]	Pass

(a) Value is % of mass 69
(b) Value is % of mass 443
(c) Value is % of mass 442

This check applies to the following Samples, MS, MSD, Blanks, and Standards:

Lab Sample ID	Lab File ID	Date Analyzed	Time Analyzed	Hours Lapsed	Client Sample ID
SU1052-IC1052	U021944.D	11/08/10	10:19	00:22	Initial cal 5
SU1052-IC1052	U021945.D	11/08/10	10:50	00:53	Initial cal 25
SU1052-IC1052	U021946.D	11/08/10	11:17	01:20	Initial cal 50
SU1052-ICC1052	U021947.D	11/08/10	11:48	01:51	Initial cal 75
SU1052-IC1052	U021948.D	11/08/10	12:14	02:17	Initial cal 100
SU1052-IC1052	U021949.D	11/08/10	12:58	03:01	Initial cal 125
SU1052-ICV1052	U021950.D	11/08/10	13:33	03:36	Initial cal verification 50
SU1052-ICV1052	U021951.D	11/08/10	14:03	04:06	Initial cal verification 50
SU1052-ICV1052	U021952.D	11/08/10	15:47	05:50	Initial cal verification 50
OP34947-BS	U021953.D	11/08/10	16:14	06:17	Blank Spike
OP34947-MB	U021954.D	11/08/10	16:41	06:44	Method Blank
ZZZZZZ	U021955.D	11/08/10	17:07	07:10	(unrelated sample)
ZZZZZZ	U021956.D	11/08/10	17:34	07:37	(unrelated sample)
OP34926-MB	U021957.D	11/08/10	18:00	08:03	Method Blank
ZZZZZZ	U021958.D	11/08/10	18:27	08:30	(unrelated sample)
M95557-11	U021959.D	11/08/10	18:53	08:56	(used for QC only; not part of job F77897)
OP34926-MS	U021960.D	11/08/10	19:20	09:23	Matrix Spike
OP34926-MSD	U021961.D	11/08/10	19:47	09:50	Matrix Spike Duplicate
F77737-1	U021962.D	11/08/10	20:13	10:16	(used for QC only; not part of job F77897)

Instrument Performance Check (DFTPP)

Job Number: F77897
Account: TETTNOAK Tetra Tech, Inc
Project: Holloman AFB; Alamogordo, NM

Sample: SU1052-DFTPP
Lab File ID: U021943.D
Instrument ID: GCMSU
Injection Date: 11/08/10
Injection Time: 09:57

Lab Sample ID	Lab File ID	Date Analyzed	Time Analyzed	Hours Lapsed	Client Sample ID
OP34947-MS	U021963.D	11/08/10	20:39	10:42	Matrix Spike
OP34947-MSD	U021964.D	11/08/10	21:06	11:09	Matrix Spike Duplicate
ZZZZZZ	U021965.D	11/08/10	21:33	11:36	(unrelated sample)

Instrument Performance Check (DFTPP)

Job Number: F77897
Account: TETTNOAK Tetra Tech, Inc
Project: Holloman AFB; Alamogordo, NM

Sample: SU1063-DFTPP
Lab File ID: U022220.D
Instrument ID: GCMSU
Injection Date: 11/15/10
Injection Time: 07:31

m/e	Ion Abundance Criteria	Raw Abundance	% Relative Abundance		Pass/Fail
51	30.0 - 60.0% of mass 198	35086	41.3		Pass
68	Less than 2.0% of mass 69	576	0.68	(1.69) [a]	Pass
69	Mass 69 relative abundance	34071	40.1		Pass
70	Less than 2.0% of mass 69	173	0.20	(0.51) [a]	Pass
127	40.0 - 60.0% of mass 198	43796	51.5		Pass
197	Less than 1.0% of mass 198	110	0.13		Pass
198	Base peak, 100% relative abundance	84970	100.0		Pass
199	5.0 - 9.0% of mass 198	5624	6.62		Pass
275	10.0 - 30.0% of mass 198	20536	24.2		Pass
365	1.0 - 100.0% of mass 198	2399	2.82		Pass
441	Present, but less than mass 443	12211	14.4	(79.6) [b]	Pass
442	40.0 - 100.0% of mass 198	79256	93.3		Pass
443	17.0 - 23.0% of mass 442	15345	18.1	(19.4) [c]	Pass

(a) Value is % of mass 69
(b) Value is % of mass 443
(c) Value is % of mass 442

This check applies to the following Samples, MS, MSD, Blanks, and Standards:

Lab Sample ID	Lab File ID	Date Analyzed	Time Analyzed	Hours Lapsed	Client Sample ID
SU1063-CC1052	U022221.D	11/15/10	07:50	00:19	Continuing cal 50
OP35016-BS	U022224.D	11/15/10	09:03	01:32	Blank Spike
OP35016-MB	U022225.D	11/15/10	09:30	01:59	Method Blank
ZZZZZZ	U022226.D	11/15/10	09:58	02:27	(unrelated sample)
ZZZZZZ	U022227.D	11/15/10	10:25	02:54	(unrelated sample)
ZZZZZZ	U022228.D	11/15/10	10:52	03:21	(unrelated sample)
ZZZZZZ	U022229.D	11/15/10	11:20	03:49	(unrelated sample)
ZZZZZZ	U022230.D	11/15/10	11:47	04:16	(unrelated sample)
ZZZZZZ	U022231.D	11/15/10	12:15	04:44	(unrelated sample)
ZZZZZZ	U022232.D	11/15/10	12:42	05:11	(unrelated sample)
ZZZZZZ	U022233.D	11/15/10	13:10	05:39	(unrelated sample)
ZZZZZZ	U022234.D	11/15/10	13:37	06:06	(unrelated sample)
F77964-10	U022235.D	11/15/10	14:05	06:34	(used for QC only; not part of job F77897)
OP35016-MS	U022236.D	11/15/10	14:32	07:01	Matrix Spike
OP35016-MSD	U022237.D	11/15/10	15:00	07:29	Matrix Spike Duplicate
ZZZZZZ	U022238.D	11/15/10	15:27	07:56	(unrelated sample)
ZZZZZZ	U022239.D	11/15/10	15:54	08:23	(unrelated sample)
F77897-36	U022240.D	11/15/10	16:21	08:50	SD27-DPT-13A
F77897-37	U022241.D	11/15/10	16:49	09:18	SD27-DPT-13B

Instrument Performance Check (DFTPP)

Job Number: F77897
Account: TETTNOAK Tetra Tech, Inc
Project: Holloman AFB; Alamogordo, NM

Sample: SU1063-DFTPP
Lab File ID: U022220.D
Instrument ID: GCMSU
Injection Date: 11/15/10
Injection Time: 07:31

Lab Sample ID	Lab File ID	Date Analyzed	Time Analyzed	Hours Lapsed	Client Sample ID
F77897-38	U022242.D	11/15/10	17:16	09:45	SD27-DPT-13C

Instrument Performance Check (DFTPP)

Job Number: F77897
Account: TETTNOAK Tetra Tech, Inc
Project: Holloman AFB; Alamogordo, NM

Sample: SU1064-DFTPP
Lab File ID: U022252.D
Instrument ID: GCMSU
Injection Date: 11/16/10
Injection Time: 13:11

m/e	Ion Abundance Criteria	Raw Abundance	% Relative Abundance		Pass/Fail
51	30.0 - 60.0% of mass 198	134189	49.2		Pass
68	Less than 2.0% of mass 69	2003	0.73	(1.67) [a]	Pass
69	Mass 69 relative abundance	120189	44.1		Pass
70	Less than 2.0% of mass 69	647	0.24	(0.54) [a]	Pass
127	40.0 - 60.0% of mass 198	148176	54.3		Pass
197	Less than 1.0% of mass 198	0	0.00		Pass
198	Base peak, 100% relative abundance	272680	100.0		Pass
199	5.0 - 9.0% of mass 198	18497	6.78		Pass
275	10.0 - 30.0% of mass 198	57378	21.0		Pass
365	1.0 - 100.0% of mass 198	5521	2.02		Pass
441	Present, but less than mass 443	28015	10.3	(80.0) [b]	Pass
442	40.0 - 100.0% of mass 198	178866	65.6		Pass
443	17.0 - 23.0% of mass 442	35021	12.8	(19.6) [c]	Pass

(a) Value is % of mass 69
(b) Value is % of mass 443
(c) Value is % of mass 442

This check applies to the following Samples, MS, MSD, Blanks, and Standards:

Lab Sample ID	Lab File ID	Date Analyzed	Time Analyzed	Hours Lapsed	Client Sample ID
SU1064-IC1064	U022253.D	11/16/10	13:29	00:18	Initial cal 5
SU1064-IC1064	U022254.D	11/16/10	13:59	00:48	Initial cal 25
SU1064-IC1064	U022255.D	11/16/10	14:27	01:16	Initial cal 50
SU1064-ICC1064	U022256.D	11/16/10	14:54	01:43	Initial cal 75
SU1064-IC1064	U022257.D	11/16/10	15:25	02:14	Initial cal 100
SU1064-IC1064	U022258.D	11/16/10	15:53	02:42	Initial cal 125
SU1064-ICV1064	U022259.D	11/16/10	16:21	03:10	Initial cal verification 50
SU1064-ICV1064	U022260.D	11/16/10	16:50	03:39	Initial cal verification 50
OP34946-BS	U022261.D	11/16/10	17:16	04:05	Blank Spike
OP34946-MB	U022262.D	11/16/10	17:43	04:32	Method Blank
ZZZZZZ	U022263.D	11/16/10	18:10	04:59	(unrelated sample)
ZZZZZZ	U022264.D	11/16/10	18:37	05:26	(unrelated sample)

Instrument Performance Check (DFTPP)

Job Number: F77897
Account: TETTNOAK Tetra Tech, Inc
Project: Holloman AFB; Alamogordo, NM

Sample: SU1071-DFTPP
Lab File ID: U022408.D
Instrument ID: GCMSU
Injection Date: 11/20/10
Injection Time: 13:30

m/e	Ion Abundance Criteria	Raw Abundance	% Relative Abundance		Pass/Fail
51	30.0 - 60.0% of mass 198	55733	51.0		Pass
68	Less than 2.0% of mass 69	911	0.83	(1.81) [a]	Pass
69	Mass 69 relative abundance	50312	46.0		Pass
70	Less than 2.0% of mass 69	285	0.26	(0.57) [a]	Pass
127	40.0 - 60.0% of mass 198	60325	55.2		Pass
197	Less than 1.0% of mass 198	0	0.00		Pass
198	Base peak, 100% relative abundance	109368	100.0		Pass
199	5.0 - 9.0% of mass 198	7629	6.98		Pass
275	10.0 - 30.0% of mass 198	23509	21.5		Pass
365	1.0 - 100.0% of mass 198	2291	2.09		Pass
441	Present, but less than mass 443	10110	9.24	(79.8) [b]	Pass
442	40.0 - 100.0% of mass 198	67367	61.6		Pass
443	17.0 - 23.0% of mass 442	12672	11.6	(18.8) [c]	Pass

(a) Value is % of mass 69
(b) Value is % of mass 443
(c) Value is % of mass 442

This check applies to the following Samples, MS, MSD, Blanks, and Standards:

Lab Sample ID	Lab File ID	Date Analyzed	Time Analyzed	Hours Lapsed	Client Sample ID
SU1071-CC1064	U022409.D	11/20/10	13:47	00:17	Continuing cal 50
OP35019-BS	U022410.D	11/20/10	14:14	00:44	Blank Spike
OP35019-MB	U022411.D	11/20/10	14:41	01:11	Method Blank
ZZZZZZ	U022412.D	11/20/10	15:07	01:37	(unrelated sample)
F77897-39	U022413.D	11/20/10	15:34	02:04	SD27-ER-11052010
ZZZZZZ	U022414.D	11/20/10	16:00	02:30	(unrelated sample)
ZZZZZZ	U022416.D	11/20/10	16:54	03:24	(unrelated sample)
ZZZZZZ	U022417.D	11/20/10	17:20	03:50	(unrelated sample)
F77970-2	U022420.D	11/20/10	18:40	05:10	(used for QC only; not part of job F77897)
OP35019-MS	U022421.D	11/20/10	19:06	05:36	Matrix Spike
OP35019-MSD	U022422.D	11/20/10	19:33	06:03	Matrix Spike Duplicate
ZZZZZZ	U022423.D	11/20/10	20:00	06:30	(unrelated sample)
ZZZZZZ	U022424.D	11/20/10	20:26	06:56	(unrelated sample)
ZZZZZZ	U022425.D	11/20/10	20:53	07:23	(unrelated sample)
OP34980-BS	U022426.D	11/20/10	21:20	07:50	Blank Spike
OP34980-MB	U022427.D	11/20/10	21:46	08:16	Method Blank
F77743-3R	U022428.D	11/20/10	22:13	08:43	(used for QC only; not part of job F77897)
OP34980-MS	U022429.D	11/20/10	22:39	09:09	Matrix Spike
OP34980-MSD	U022430.D	11/20/10	23:06	09:36	Matrix Spike Duplicate

Instrument Performance Check (DFTPP)

Job Number: F77897
Account: TETTNOAK Tetra Tech, Inc
Project: Holloman AFB; Alamogordo, NM

Sample: SU1072-DFTPP
Lab File ID: U022433.D
Instrument ID: GCMSU
Injection Date: 11/22/10
Injection Time: 09:46

m/e	Ion Abundance Criteria	Raw Abundance	% Relative Abundance		Pass/Fail
51	30.0 - 60.0% of mass 198	64448	45.8		Pass
68	Less than 2.0% of mass 69	1000	0.71	(1.72) [a]	Pass
69	Mass 69 relative abundance	58039	41.3		Pass
70	Less than 2.0% of mass 69	328	0.23	(0.57) [a]	Pass
127	40.0 - 60.0% of mass 198	72776	51.8		Pass
197	Less than 1.0% of mass 198	507	0.36		Pass
198	Base peak, 100% relative abundance	140584	100.0		Pass
199	5.0 - 9.0% of mass 198	9348	6.65		Pass
275	10.0 - 30.0% of mass 198	29717	21.1		Pass
365	1.0 - 100.0% of mass 198	3177	2.26		Pass
441	Present, but less than mass 443	15747	11.2	(80.6) [b]	Pass
442	40.0 - 100.0% of mass 198	101501	72.2		Pass
443	17.0 - 23.0% of mass 442	19546	13.9	(19.3) [c]	Pass

(a) Value is % of mass 69
(b) Value is % of mass 443
(c) Value is % of mass 442

This check applies to the following Samples, MS, MSD, Blanks, and Standards:

Lab Sample ID	Lab File ID	Date Analyzed	Time Analyzed	Hours Lapsed	Client Sample ID
SU1072-IC1072	U022434.D	11/22/10	10:13	00:27	Initial cal 5
SU1072-IC1072	U022435.D	11/22/10	10:40	00:54	Initial cal 25
SU1072-IC1072	U022436.D	11/22/10	11:08	01:22	Initial cal 50
SU1072-ICC1072	U022437.D	11/22/10	11:35	01:49	Initial cal 75
SU1072-IC1072	U022438.D	11/22/10	12:04	02:18	Initial cal 100
SU1072-IC1072	U022439.D	11/22/10	12:33	02:47	Initial cal 125
SU1072-ICV1072	U022440.D	11/22/10	13:00	03:14	Initial cal verification 50
SU1072-ICV1072	U022441.D	11/22/10	13:31	03:45	Initial cal verification 50
OP35010-BS	U022442.D	11/22/10	14:25	04:39	Blank Spike
OP35010-MB	U022443.D	11/22/10	14:53	05:07	Method Blank
F77889-23	U022445.D	11/22/10	15:48	06:02	(used for QC only; not part of job F77897)
ZZZZZZ	U022448.D	11/22/10	17:19	07:33	(unrelated sample)
F77889-23	U022449.D	11/22/10	17:46	08:00	(used for QC only; not part of job F77897)
OP35019-MB	U022451.D	11/22/10	18:40	08:54	Method Blank
ZZZZZZ	U022452.D	11/22/10	19:07	09:21	(unrelated sample)

Instrument Performance Check (DFTPP)

Job Number: F77897
Account: TETTNOAK Tetra Tech, Inc
Project: Holloman AFB; Alamogordo, NM

Sample: SU1075-DFTPP
Lab File ID: U022528.D
Instrument ID: GCMSU
Injection Date: 11/24/10
Injection Time: 13:49

m/e	Ion Abundance Criteria	Raw Abundance	% Relative Abundance		Pass/Fail
51	30.0 - 60.0% of mass 198	58352	45.3		Pass
68	Less than 2.0% of mass 69	976	0.76	(1.85) [a]	Pass
69	Mass 69 relative abundance	52776	40.9		Pass
70	Less than 2.0% of mass 69	185	0.14	(0.35) [a]	Pass
127	40.0 - 60.0% of mass 198	65725	51.0		Pass
197	Less than 1.0% of mass 198	0	0.00		Pass
198	Base peak, 100% relative abundance	128912	100.0		Pass
199	5.0 - 9.0% of mass 198	8971	6.96		Pass
275	10.0 - 30.0% of mass 198	27741	21.5		Pass
365	1.0 - 100.0% of mass 198	3051	2.37		Pass
441	Present, but less than mass 443	14371	11.1	(82.7) [b]	Pass
442	40.0 - 100.0% of mass 198	93920	72.9		Pass
443	17.0 - 23.0% of mass 442	17379	13.5	(18.5) [c]	Pass

(a) Value is % of mass 69
(b) Value is % of mass 443
(c) Value is % of mass 442

This check applies to the following Samples, MS, MSD, Blanks, and Standards:

Lab Sample ID	Lab File ID	Date Analyzed	Time Analyzed	Hours Lapsed	Client Sample ID
SU1075-CC1064	U022529.D	11/24/10	14:07	00:18	Continuing cal 75
OP35019-BS	U022530.D	11/24/10	14:52	01:03	Blank Spike
OP35019-MB	U022531.D	11/24/10	15:19	01:30	Method Blank
ZZZZZZ	U022532.D	11/24/10	15:47	01:58	(unrelated sample)
OP35108-BS	U022533.D	11/24/10	16:14	02:25	Blank Spike
OP35108-MB	U022534.D	11/24/10	16:41	02:52	Method Blank
ZZZZZZ	U022535.D	11/24/10	17:08	03:19	(unrelated sample)
ZZZZZZ	U022536.D	11/24/10	17:36	03:47	(unrelated sample)
ZZZZZZ	U022537.D	11/24/10	18:03	04:14	(unrelated sample)
ZZZZZZ	U022538.D	11/24/10	18:30	04:41	(unrelated sample)
ZZZZZZ	U022539.D	11/24/10	18:57	05:08	(unrelated sample)
ZZZZZZ	U022540.D	11/24/10	19:24	05:35	(unrelated sample)
ZZZZZZ	U022541.D	11/24/10	19:51	06:02	(unrelated sample)
ZZZZZZ	U022542.D	11/24/10	20:18	06:29	(unrelated sample)
ZZZZZZ	U022546.D	11/24/10	22:06	08:17	(unrelated sample)
ZZZZZZ	U022547.D	11/24/10	22:33	08:44	(unrelated sample)

Semivolatile Internal Standard Area Summary

Job Number: F77897
Account: TETTNOAK Tetra Tech, Inc
Project: Holloman AFB; Alamogordo, NM

Check Std:	SL2516-ICC2516	**Injection Date:**	11/24/10
Lab File ID:	L049102.D	**Injection Time:**	11:01
Instrument ID:	GCMSL	**Method:**	SW846 8270D

	IS 1 AREA	RT	IS 2 AREA	RT	IS 3 AREA	RT	IS 4 AREA	RT	IS 5 AREA	RT	IS 6 AREA	RT
Initial Cal [a]	114470	4.95	448084	6.09	231989	8.37	402486	10.87	322407	15.79	323786	18.30
Check Std [b]	114470	4.95	448084	6.09	231989	8.37	402486	10.87	322407	15.79	323786	18.30
Upper Limit [c]	228940	5.45	896168	6.59	463978	8.87	804972	11.37	644814	16.29	647572	18.80
Lower Limit [d]	57235	4.45	224042	5.59	115995	7.87	201243	10.37	161204	15.29	161893	17.80

Lab Sample ID	IS 1 AREA	RT	IS 2 AREA	RT	IS 3 AREA	RT	IS 4 AREA	RT	IS 5 AREA	RT	IS 6 AREA	RT
OP35019-BS	175561	4.95	658306	6.09	341834	8.36	562487	10.86	441950	15.79	453151	18.30
OP35019-MB	159923	4.95	598294	6.09	307155	8.36	515032	10.86	442959	15.78	417535	18.29
ZZZZZZ	158852	4.94	593841	6.08	312682	8.36	528546	10.86	461074	15.78	441007	18.29

IS 1 = 1,4-Dichlorobenzene-d4
IS 2 = Naphthalene-d8
IS 3 = Acenaphthene-D10
IS 4 = Phenanthrene-d10
IS 5 = Chrysene-d12
IS 6 = Perylene-d12

(a) Initial Cal is: SL2516-ICC2516 L049102.D 11/24/10 11:01
(b) Check Std Limit = -50 to + 100% of initial cal area.
(c) Upper Limit = + 100% of check standard area; Retention time + 0.5 minutes.
(d) Lower Limit = -50% of check standard area; Retention time -0.5 minutes.

Semivolatile Internal Standard Area Summary

Job Number: F77897
Account: TETTNOAK Tetra Tech, Inc
Project: Holloman AFB; Alamogordo, NM

Check Std: SU1063-CC1052 **Injection Date:** 11/15/10
Lab File ID: U022221.D **Injection Time:** 07:50
Instrument ID: GCMSU **Method:** SW846 8270D

	IS 1 AREA	RT	IS 2 AREA	RT	IS 3 AREA	RT	IS 4 AREA	RT	IS 5 AREA	RT	IS 6 AREA	RT
Initial Cal [a]	100693	4.98	455342	6.13	204944	8.43	358168	10.89	359831	15.81	363443	18.33
Check Std [b]	82126	4.85	346747	5.98	165411	8.25	282269	10.69	282667	15.60	290953	18.11
Upper Limit [c]	164252	5.35	693494	6.48	330822	8.75	564538	11.19	565334	16.10	581906	18.61
Lower Limit [d]	41063	4.35	173374	5.48	82706	7.75	141135	10.19	141334	15.10	145477	17.61

Lab Sample ID	IS 1 AREA	RT	IS 2 AREA	RT	IS 3 AREA	RT	IS 4 AREA	RT	IS 5 AREA	RT	IS 6 AREA	RT
OP35016-BS	64968	4.85	254644	5.98	131986	8.25	223755	10.69	208256	15.60	211132	18.11
OP35016-MB	78062	4.85	312814	5.98	167815	8.24	285050	10.68	279133	15.59	282063	18.11
ZZZZZZ	75860	4.85	297825	5.98	155478	8.24	263528	10.68	259444	15.59	260705	18.10
ZZZZZZ	76929	4.85	308967	5.98	165817	8.24	283427	10.68	271667	15.59	255286	18.11
ZZZZZZ	68877	4.85	274038	5.98	143540	8.24	240647	10.68	230098	15.59	227057	18.10
ZZZZZZ	88185	4.85	353091	5.98	191095	8.25	324812	10.68	315059	15.59	305306	18.11
ZZZZZZ	89350	4.85	346435	5.98	183045	8.24	308864	10.68	302285	15.59	300254	18.11
ZZZZZZ	81226	4.85	317499	5.98	171401	8.24	289504	10.68	285190	15.59	277959	18.11
ZZZZZZ	69790	4.85	275069	5.98	148046	8.24	250894	10.68	242474	15.59	240127	18.10
ZZZZZZ	73081	4.85	290514	5.98	155585	8.24	262206	10.68	255021	15.59	254622	18.10
ZZZZZZ	79598	4.85	310115	5.98	166181	8.24	276738	10.68	271278	15.59	269890	18.11
F77964-10	86331	4.85	341410	5.98	182190	8.24	304637	10.68	294939	15.59	288197	18.11
OP35016-MS	81829	4.85	321268	5.98	166739	8.25	277993	10.69	258867	15.60	265452	18.11
OP35016-MSD	71985	4.85	279700	5.98	147516	8.25	248687	10.69	226020	15.60	229592	18.11
ZZZZZZ	55955	4.85	221909	5.98	117917	8.24	199718	10.68	192307	15.59	190246	18.10
ZZZZZZ	66113	4.85	260007	5.98	140771	8.24	237461	10.68	226183	15.59	222024	18.10
F77897-36	72562	4.85	288060	5.98	152524	8.24	255370	10.68	246733	15.59	242385	18.10
F77897-37	83437	4.85	323479	5.98	173611	8.24	296017	10.68	285363	15.59	276447	18.10
F77897-38	64554	4.85	251230	5.98	130207	8.24	215625	10.68	215731	15.59	223449	18.10

IS 1 = 1,4-Dichlorobenzene-d4
IS 2 = Naphthalene-d8
IS 3 = Acenaphthene-D10
IS 4 = Phenanthrene-d10
IS 5 = Chrysene-d12
IS 6 = Perylene-d12

(a) Initial Cal is: SU1052-ICC1052 U021947.D 11/08/10 11:48
(b) Check Std Limit = -50 to + 100% of initial cal area.
(c) Upper Limit = + 100% of check standard area; Retention time + 0.5 minutes.
(d) Lower Limit = -50% of check standard area; Retention time -0.5 minutes.

Semivolatile Internal Standard Area Summary

Job Number: F77897
Account: TETTNOAK Tetra Tech, Inc
Project: Holloman AFB; Alamogordo, NM

Check Std: SU1071-CC1064 **Injection Date:** 11/20/10
Lab File ID: U022409.D **Injection Time:** 13:47
Instrument ID: GCMSU **Method:** SW846 8270D

	IS 1 AREA	RT	IS 2 AREA	RT	IS 3 AREA	RT	IS 4 AREA	RT	IS 5 AREA	RT	IS 6 AREA	RT
Initial Cal [a]	99240	4.82	463145	5.93	206042	8.18	356256	10.62	370070	15.52	367332	18.03
Check Std [b]	122788	4.69	544255	5.78	257842	7.99	453259	10.41	463162	15.31	454538	17.81
Upper Limit [c]	245576	5.19	1088510	6.28	515684	8.49	906518	10.91	926324	15.81	909076	18.31
Lower Limit [d]	61394	4.19	272128	5.28	128921	7.49	226630	9.91	231581	14.81	227269	17.31

Lab Sample ID	IS 1 AREA	RT	IS 2 AREA	RT	IS 3 AREA	RT	IS 4 AREA	RT	IS 5 AREA	RT	IS 6 AREA	RT
OP35019-BS	130940	4.69	527491	5.78	272613	7.99	456104	10.41	439476	15.30	453671	17.80
OP35019-MB	127547	4.69	498092	5.78	263019	7.98	430161	10.40	401685	15.29	421022	17.80
ZZZZZZ	116387	4.69	461424	5.78	240422	7.98	397261	10.40	372295	15.29	386457	17.79
F77897-39	118086	4.69	457938	5.77	242015	7.98	399080	10.40	383973	15.29	394733	17.79
ZZZZZZ	123080	4.69	493847	5.77	258676	7.98	430381	10.40	428462	15.30	434138	17.80
ZZZZZZ	122779	4.69	484019	5.77	252388	7.98	424266	10.40	405815	15.29	414234	17.79
ZZZZZZ	121428	4.69	471532	5.77	251424	7.98	415268	10.40	405765	15.29	417852	17.79
F77970-2	125094	4.69	480524	5.77	256596	7.98	431636	10.40	424238	15.29	430985	17.79
OP35019-MS	128641	4.69	503932	5.78	259843	7.98	436324	10.41	416209	15.30	425193	17.80
OP35019-MSD	131336	4.69	511145	5.78	262603	7.98	438946	10.41	418490	15.30	428345	17.80
ZZZZZZ	127737	4.69	504654	5.77	265086	7.98	442670	10.40	438375	15.29	441538	17.79
ZZZZZZ	127745	4.69	505641	5.77	267285	7.98	446278	10.40	453866	15.29	440214	17.79
ZZZZZZ	130893	4.69	513231	5.77	270900	7.98	454346	10.40	446973	15.29	447900	17.79
OP34980-BS	129738	4.69	512234	5.78	264372	7.98	455122	10.40	446188	15.30	447934	17.79
OP34980-MB	132975	4.69	522406	5.77	278376	7.98	459175	10.40	451844	15.29	458538	17.79
F77743-3R	133644	4.69	523746	5.77	279466	7.98	471950	10.40	468327	15.29	465369	17.79
OP34980-MS	140837	4.69	550620	5.78	283712	7.98	482456	10.40	461290	15.30	469777	17.79
OP34980-MSD	133323	4.69	519940	5.78	269486	7.98	454430	10.40	450204	15.30	450043	17.79

IS 1 = 1,4-Dichlorobenzene-d4
IS 2 = Naphthalene-d8
IS 3 = Acenaphthene-D10
IS 4 = Phenanthrene-d10
IS 5 = Chrysene-d12
IS 6 = Perylene-d12

(a) Initial Cal is: SU1064-ICC1064 U022256.D 11/16/10 14:54
(b) Check Std Limit = -50 to + 100% of initial cal area.
(c) Upper Limit = + 100% of check standard area; Retention time + 0.5 minutes.
(d) Lower Limit = -50% of check standard area; Retention time -0.5 minutes.

Semivolatile Internal Standard Area Summary

Job Number: F77897
Account: TETTNOAK Tetra Tech, Inc
Project: Holloman AFB; Alamogordo, NM

Check Std:	SU1072-ICC1072	**Injection Date:**	11/22/10
Lab File ID:	U022437.D	**Injection Time:**	11:35
Instrument ID:	GCMSU	**Method:**	SW846 8270D

	IS 1 AREA	RT	IS 2 AREA	RT	IS 3 AREA	RT	IS 4 AREA	RT	IS 5 AREA	RT	IS 6 AREA	RT
Initial Cal [a]	85071	4.68	343967	5.76	183554	7.96	313860	10.38	333072	15.27	322973	17.77
Check Std [b]	85071	4.68	343967	5.76	183554	7.96	313860	10.38	333072	15.27	322973	17.77
Upper Limit [c]	170142	5.18	687934	6.26	367108	8.46	627720	10.88	666144	15.77	645946	18.27
Lower Limit [d]	42536	4.18	171984	5.26	91777	7.46	156930	9.88	166536	14.77	161487	17.27

Lab Sample ID	IS 1 AREA	RT	IS 2 AREA	RT	IS 3 AREA	RT	IS 4 AREA	RT	IS 5 AREA	RT	IS 6 AREA	RT
OP35010-BS	87221	4.68	332767	5.76	159322	7.96	255004	10.38	215067	15.27	193485	17.77
OP35010-MB	81478	4.67	329033	5.76	177914	7.96	291810	10.38	270438	15.26	273708	17.76
F77889-23	80660	4.68	317131	5.76	172280	7.96	298657	10.38	308120	15.26	319247	17.76
ZZZZZZ	87252	4.68	350449	5.76	185296	7.96	313744	10.38	298070	15.26	292222	17.76
F77889-23	101784	4.67	396614	5.76	213991	7.96	354396	10.38	323010	15.26	314551	17.76
OP35019-MB	123889	4.67	486650	5.76	261435	7.96	432332	10.38	388795	15.26	370183	17.76
ZZZZZZ	119718	4.67	461744	5.76	242904	7.96	398767	10.38	386935	15.26	387411	17.76

IS 1 = 1,4-Dichlorobenzene-d4
IS 2 = Naphthalene-d8
IS 3 = Acenaphthene-D10
IS 4 = Phenanthrene-d10
IS 5 = Chrysene-d12
IS 6 = Perylene-d12

(a) Initial Cal is: SU1072-ICC1072 U022437.D 11/22/10 11:35
(b) Check Std Limit = -50 to + 100% of initial cal area.
(c) Upper Limit = + 100% of check standard area; Retention time + 0.5 minutes.
(d) Lower Limit = -50% of check standard area; Retention time -0.5 minutes.

Semivolatile Internal Standard Area Summary

Job Number: F77897
Account: TETTNOAK Tetra Tech, Inc
Project: Holloman AFB; Alamogordo, NM

Check Std:	SU1075-CC1064	**Injection Date:**	11/24/10
Lab File ID:	U022529.D	**Injection Time:**	14:07
Instrument ID:	GCMSU	**Method:**	SW846 8270D

	IS 1 AREA	RT	IS 2 AREA	RT	IS 3 AREA	RT	IS 4 AREA	RT	IS 5 AREA	RT	IS 6 AREA	RT
Initial Cal [a]	99240	4.82	463145	5.93	206042	8.18	356256	10.62	370070	15.52	367332	18.03
Check Std [b]	94917	4.64	446525	5.72	198564	7.90	344752	10.31	318314	15.20	283632	17.69
Upper Limit [c]	189834	5.14	893050	6.22	397128	8.40	689504	10.81	636628	15.70	567264	18.19
Lower Limit [d]	47459	4.14	223263	5.22	99282	7.40	172376	9.81	159157	14.70	141816	17.19

Lab Sample ID	IS 1 AREA	RT	IS 2 AREA	RT	IS 3 AREA	RT	IS 4 AREA	RT	IS 5 AREA	RT	IS 6 AREA	RT
OP35019-BS	117063	4.64	457448	5.72	236099	7.90	387228	10.31	325746	15.20	318925	17.70
OP35019-MB	84199	4.64	330708	5.71	170345	7.90	283322	10.30	257141	15.19	242439	17.69
ZZZZZZ	114442	4.64	445282	5.71	232871	7.90	379176	10.31	338132	15.19	320972	17.68
OP35108-BS	100624	4.64	401412	5.72	209060	7.90	353918	10.31	316123	15.19	284890	17.69
OP35108-MB	77483	4.64	309288	5.71	162393	7.90	276127	10.30	261900	15.19	252858	17.69
ZZZZZZ	104371	4.64	416075	5.71	220942	7.90	360591	10.30	292689	15.19	260182	17.69
ZZZZZZ	126726	4.64	499748	5.72	268005	7.90	455147	10.31	419314	15.19	392364	17.70
ZZZZZZ	113516	4.64	460768	5.72	250037	7.90	423606	10.31	379126	15.19	346497	17.69
ZZZZZZ	110481	4.64	452936	5.72	245997	7.90	414887	10.31	366097	15.19	341817	17.70
ZZZZZZ	113480	4.64	459304	5.72	247128	7.90	413744	10.31	356639	15.20	328626	17.71
ZZZZZZ	90615	4.64	375431	5.72	206385	7.91	351793	10.31	292460	15.20	267600	17.70
ZZZZZZ	112588	4.65	454875	5.73	247080	7.91	416972	10.33	369353	15.21	346217	17.71
ZZZZZZ	108569	4.65	444362	5.73	244465	7.91	424230	10.33	386340	15.21	366823	17.71
ZZZZZZ	89925	4.65	363363	5.73	204208	7.91	358338	10.32	334496	15.20	320997	17.71
ZZZZZZ	90496	4.64	373821	5.73	210123	7.91	388622	10.32	355480	15.21	299433	17.71

IS 1 = 1,4-Dichlorobenzene-d4
IS 2 = Naphthalene-d8
IS 3 = Acenaphthene-D10
IS 4 = Phenanthrene-d10
IS 5 = Chrysene-d12
IS 6 = Perylene-d12

(a) Initial Cal is: SU1064-ICC1064 U022256.D 11/16/10 14:54
(b) Check Std Limit = -50 to + 100% of initial cal area.
(c) Upper Limit = + 100% of check standard area; Retention time + 0.5 minutes.
(d) Lower Limit = -50% of check standard area; Retention time -0.5 minutes.

Semivolatile Surrogate Recovery Summary

Job Number: F77897
Account: TETTNOAK Tetra Tech, Inc
Project: Holloman AFB; Alamogordo, NM

Method: SW846 8270D **Matrix:** AQ

Samples and QC shown here apply to the above method

Lab Sample ID	Lab File ID	S1	S2	S3
F77897-39	U022413.D	82.0	71.0	83.0
OP35019-BS	U022410.D	87.0	78.0	83.0
OP35019-BS	U022530.D	88.0	80.0	93.0
OP35019-BS	L049119.D	85.0	81.0	89.0
OP35019-MB	U022411.D	84.0	74.0	87.0
OP35019-MB	U022451.D	79.0	82.0	99.0
OP35019-MB	U022531.D	83.0	76.0	91.0
OP35019-MB	L049120.D	80.0	82.0	86.0
OP35019-MS	U022421.D	70.0	63.0	72.0
OP35019-MSD	U022422.D	90.0	83.0	84.0

Surrogate Compounds	Recovery Limits
S1 = Nitrobenzene-d5	42-108%
S2 = 2-Fluorobiphenyl	40-106%
S3 = Terphenyl-d14	39-121%

Semivolatile Surrogate Recovery Summary

Job Number: F77897
Account: TETTNOAK Tetra Tech, Inc
Project: Holloman AFB; Alamogordo, NM

Method: SW846 8270D **Matrix:** SO

Samples and QC shown here apply to the above method

Lab Sample ID	Lab File ID	S1	S2	S3
F77897-36	U022240.D	80.0	75.0	80.0
F77897-37	U022241.D	70.0	61.0	79.0
F77897-38	U022242.D	86.0	80.0	84.0
OP35016-BS	U022224.D	80.0	76.0	80.0
OP35016-MB	U022225.D	82.0	75.0	81.0
OP35016-MS	U022236.D	81.0	77.0	86.0
OP35016-MSD	U022237.D	83.0	77.0	83.0

Surrogate Compounds	Recovery Limits
S1 = Nitrobenzene-d5	40-105%
S2 = 2-Fluorobiphenyl	43-107%
S3 = Terphenyl-d14	45-119%

Initial Calibration Summary

Job Number: F77897
Account: TETTNOAK Tetra Tech, Inc
Project: Holloman AFB; Alamogordo, NM

Sample: SL2516-ICC2516
Lab FileID: L049102.D

Response Factor Report MSBNA02

Method : C:\msdchem\2\METHODS\app9D.m (RTE Integrator)
Title : SW846 8270D OR EPA 625
Last Update : Mon Nov 29 05:58:29 2010
Response via : Initial Calibration

Calibration Files
5 =L049105.D 25 =L049107.D 50 =L049110.D 75 =L049111.D
100 =L049112.D 125 =L049113.D icv =L049116.D 10 =L049108.D
200 =L049115.D =

Compound	5	25	50	75	100	125	icv	10	200	Avg	%RSD
1) I 1,4-Dichlorobenzene-d ----------ISTD----------											
2) 1,4-Dioxane	0.578	0.569	0.558	0.564	0.543	0.547				0.560	2.38
3) N-nitrosodimethylamine	0.704	0.743	0.713	0.700	0.679	0.684				0.704	3.29
4) Pyridine	1.509	1.528	1.444	1.451	1.388	1.405				1.454	3.80
5) Benzaldehyde	1.141	1.229	1.132	1.173	1.031	0.967				1.112	8.66
6) Aniline	2.386	2.136	1.949	1.901	1.699	1.653				1.954	14.08
7) 2-Fluorophenol	1.361	1.337	1.231	1.220	1.114	1.105				1.228	8.75
8) bis(2-Chloroethyl)ether	1.392	1.362	1.307	1.292	1.217	1.196				1.294	5.97
9) Phenol-d5	1.768	1.697	1.555	1.522	1.377	1.334				1.542	11.09
10) Phenol	2.022	1.883	1.672	1.625	1.442	1.397				1.673	14.57
11) 2-Chlorophenol	1.446	1.449	1.401	1.403	1.323	1.294				1.386	4.62
12) 1,3-Dichlorobenzene	1.678	1.616	1.539	1.487	1.407	1.378				1.517	7.71
13) 1,4-Dichlorobenzene	1.608	1.579	1.448	1.448	1.357	1.334				1.462	7.68
14) 1,2-Dichlorobenzene	1.617	1.520	1.417	1.384	1.291	1.270				1.417	9.42
15) Benzyl alcohol	0.921	0.946	0.938	0.954	0.895	0.898				0.925	2.68
16) bis(2-chloroisopropyl)ether	2.167	1.997	1.832	1.784	1.605	1.550				1.822	12.79
17) 2-Methylphenol	1.375	1.298	1.242	1.241	1.160	1.138				1.242	7.06
18) Acetophenone	2.057	1.946	1.727	1.727	1.576	1.525				1.760	11.75
19) Hexachloroethane	0.528	0.560	0.530	0.529	0.498	0.487				0.522	4.96
20) N-Nitroso-di-n-propylamine	0.963	0.940	0.888	0.881	0.792	0.757				0.870	9.32
21) 3&4-Methylphenol	1.396	1.362	1.250	1.241	1.136	1.091				1.246	9.64
22) I Naphthalene-d8 ----------ISTD----------											
23) Nitrobenzene-d5											

Initial Calibration Summary

Job Number: F77897
Account: TETTNOAK Tetra Tech, Inc
Project: Holloman AFB; Alamogordo, NM

Sample: SL2516-ICC2516
Lab FileID: L049102.D

```
            0.338 0.341 0.351 0.346 0.339 0.328                      0.341    2.32
24)  Nitrobenzene
            0.346 0.343 0.344 0.337 0.326 0.312                      0.335    3.99
25)  Isophorone
            0.705 0.649 0.671 0.647 0.625 0.608                      0.651    5.31
26)  2-Nitrophenol
            0.181 0.196 0.208 0.204 0.205 0.195                      0.198    5.00
27)  2,4-Dimethylphenol
            0.369 0.331 0.335 0.323 0.308 0.301                      0.328    7.30
28)  bis(2-Chloroethoxy)methane
            0.436 0.386 0.387 0.375 0.362 0.347                      0.382    7.97
29)  Benzoic Acid
            0.072 0.174 0.216 0.227 0.247 0.249                      0.198   33.96
             ---- Quadratic regr., Force(0,0) ----  Coefficient =  0.9985
               Response Ratio = 0.00000 + 0.18857 *A + 0.02051 *A^2

30)  2,4-Dichlorophenol
            0.325 0.307 0.315 0.306 0.290 0.279                      0.304    5.52
31)  1,2,4-Trichlorobenzene
            0.411 0.352 0.351 0.330 0.322 0.305                      0.345   10.70
32)  Naphthalene
            1.116 1.166 0.890 0.854 0.801 0.750                      0.930   18.43
33)  alpha-terpineol
            0.286 0.249 0.247 0.239 0.225 0.211                      0.243   10.59
34)  4-Chloroaniline
            0.457 0.426 0.426 0.419 0.399 0.377                      0.417    6.53
35)  2,6-Dichlorophenol
            0.323 0.292 0.296 0.284 0.271 0.262                      0.288    7.40
36)  Hexachlorobutadiene
            0.178 0.166 0.164 0.155 0.151 0.146                      0.160    7.41
37)  Caprolactam
            0.103 0.115 0.128 0.131 0.133 0.125                      0.123    9.15
38)  4-Chloro-3-methylphenol
            0.299 0.285 0.296 0.289 0.279 0.270                      0.286    3.73
39)  2-Methylnaphthalene
            0.737 0.673 0.649 0.625 0.598 0.570                      0.642    9.19
40)  1-Methylnaphthalene
            0.740 0.658 0.653 0.620 0.602 0.565                      0.640    9.39
41)  1,2,4,5-Tetrachlorobenzene
            0.370 0.308 0.303 0.286 0.267 0.250                      0.297   14.06

42) I   Acenaphthene-d10      ----------------ISTD---------------------
43)  Hexachlorocyclopentadiene
            0.248 0.312 0.324 0.318 0.305 0.302                      0.302    9.04
44)  2,4,6-Trichlorophenol
            0.403 0.434 0.410 0.400 0.385 0.377                      0.402    4.98
45)  2,4,5-Trichlorophenol
            0.445 0.447 0.424 0.420 0.401 0.400                      0.423    4.86
46)  2-Fluorobiphenyl
            1.461 1.422 1.323 1.254 1.190 1.154                      1.301    9.53
47)  1,1'-Biphenyl
            1.823 1.865 1.715 1.661 1.568 1.549                      1.697    7.65
48)  2-Chloronaphthalene
            1.318 1.290 1.171 1.119 1.054 1.027                      1.163   10.35
49)  2-Nitroaniline
            0.248 0.330 0.345 0.342 0.337 0.341                      0.324   11.53
50)  m-Dinitrobenzene
            0.173 0.238 0.248 0.240 0.241 0.237                      0.230   12.26
51)  Acenaphthylene
            2.004 1.956 1.776 1.707 1.607 1.550                      1.767   10.40
```

Initial Calibration Summary

Job Number: F77897
Account: TETTNOAK Tetra Tech, Inc
Project: Holloman AFB; Alamogordo, NM

Sample: SL2516-ICC2516
Lab FileID: L049102.D

```
52)  Dimethylphthalate
           1.491 1.436 1.360 1.306 1.239 1.218                    1.342    8.07
53)  2,6-Dinitrotoluene
           0.278 0.323 0.326 0.318 0.306 0.308                    0.310    5.70
54)  Acenaphthene
           1.199 1.213 1.103 1.048 1.012 0.980                    1.093    8.89
55)  3-Nitroaniline
           0.314 0.384 0.392 0.379 0.381 0.375                    0.371    7.70
56)  2,4-Dinitrophenol
           0.048 0.150 0.187 0.202 0.218 0.220                    0.171   38.25
            ---- Quadratic regr., Force(0,0) ----  Coefficient =  0.9981
              Response Ratio = 0.00000 + 0.16476 *A + 0.01873 *A^2

57)  Dibenzofuran
           1.826 1.729 1.538 1.460 1.380 1.339                    1.546   12.61
58)  2,4-Dinitrotoluene
           0.320 0.394 0.383 0.363 0.354 0.353                    0.361    7.21
59)  4-Nitrophenol
           0.135 0.176 0.180 0.176 0.182 0.179                    0.172   10.44
60)  2,3,4,6-Tetrachlorophenol
           0.330 0.332 0.329 0.324 0.309 0.305                    0.321    3.54
61)  Fluorene
           1.413 1.430 1.316 1.263 1.205 1.163                    1.298    8.36
62)  4-Chlorophenyl-phenylether
           0.747 0.670 0.623 0.591 0.559 0.542                    0.622   12.32
63)  Diethylphthalate
           1.251 1.292 1.251 1.214 1.161 1.119                    1.214    5.31
64)  4-Nitroaniline
           0.285 0.341 0.353 0.358 0.363 0.358                    0.343    8.55

65) I   Phenanthrene-d10      ----------------ISTD---------------------
66)  4,6-Dinitro-2-methylphenol
           0.079 0.144 0.156 0.155 0.159 0.159                    0.142   22.18
            ---- Quadratic regr., Force(0,0) ----  Coefficient =  0.9996
              Response Ratio = 0.00000 + 0.14891 *A + 0.00352 *A^2

67)  Diphenylamine
           0.709 0.692 0.654 0.618 0.588 0.569                    0.638    8.78
68)  n-Nitrosodiphenylamine
           0.590 0.576 0.545 0.515 0.490 0.474                    0.532    8.78
69)  1,2-Diphenylhydrazine
           0.702 0.720 0.687 0.661 0.633 0.610                    0.669    6.31
70)  2,4,6-Tribromophenol
           0.103 0.102 0.097 0.090 0.086 0.085                    0.094    8.31
71)  4-Bromophenyl-phenylether
           0.205 0.212 0.202 0.193 0.183 0.179                    0.196    6.60
72)  Hexachlorobenzene
           0.236 0.228 0.211 0.201 0.191 0.187                    0.209    9.50
73)  Simazine
           0.110 0.131 0.131 0.124 0.120 0.118                    0.122    6.58
74)  Atrazine
           0.213 0.238 0.227 0.220 0.212 0.201                    0.219    5.97
75)  Pentachlorophenol
           0.064 0.111 0.119 0.117 0.119 0.119                    0.108   20.09
            ---- Quadratic regr., Force(0,0) ----  Coefficient =  0.9996
              Response Ratio = 0.00000 + 0.11456 *A + 0.00141 *A^2

76)  Phenanthrene
           1.200 1.189 1.036 0.995 0.944 0.910                    1.046   11.78
77)  Anthracene
```

Initial Calibration Summary

Job Number: F77897
Account: TETTNOAK Tetra Tech, Inc
Project: Holloman AFB; Alamogordo, NM

Sample: SL2516-ICC2516
Lab FileID: L049102.D

```
            1.125 1.161 1.068 1.016 0.965 0.928                        1.044    8.73
 78)  Carbazole
            1.090 1.096 1.025 0.977 0.925 0.892                        1.001    8.46
 79)  Di-n-butylphthalate
            0.946 1.107 1.076 1.033 0.982 0.945                        1.015    6.73
 80)  Fluoranthene
            1.134 1.211 1.112 1.077 1.001 0.974                        1.085    8.06

 81) I   Chrysene-d12          ----------------ISTD---------------------
 82)  Benzidine
            0.532 0.809 0.909 0.895 0.895 0.877                        0.820   17.73
 83)  Pyrene
            1.418 1.425 1.392 1.319 1.289 1.242                        1.347    5.59
 84)  Terphenyl-d14
            0.769 0.799 0.805 0.772 0.748 0.729                        0.770    3.78
 85)  Butylbenzylphthalate
            0.354 0.509 0.557 0.533 0.545 0.530                        0.505   15.00
 86)  3,3'-Dichlorobenzidine
            0.274 0.388 0.421 0.418 0.410 0.410                        0.387   14.58
 87)  Benzo[a]anthracene
            1.057 1.143 1.157 1.124 1.113 1.101                        1.116    3.15
 88)  Chrysene
            1.175 1.111 1.092 1.057 1.024 1.012                        1.079    5.62
 89)  bis(2-Ethylhexyl)phthalate
            0.449 0.658 0.717 0.696 0.695 0.670                        0.648   15.40

 90) I   Perylene-d12          ----------------ISTD---------------------
 91)  Di-n-octylphthalate
            0.569 1.051 1.166 1.138 1.080 1.007                        1.002   21.95
             ---- Quadratic regr., Force(0,0) ----  Coefficient =  0.9984
               Response Ratio = 0.00000 + 1.25362 *A + -0.07516 *A^2

 92)  Benzo[b]fluoranthene
            1.051 1.170 1.147 1.117 1.058 1.013                        1.093    5.59
 93)  Benzo[k]fluoranthene
            1.165 1.143 1.076 1.055 0.959 0.943                        1.057    8.67
 94)  Benzo[a]pyrene
            0.979 1.118 1.091 1.071 1.021 0.993                        1.046    5.37
 95)  Indeno[1,2,3-cd]pyrene
            0.876 1.058 1.062 1.084 1.063 1.050                        1.032    7.49
 96)  Dibenz[a,h]anthracene
            0.962 1.073 1.077 1.068 1.025 1.015                        1.037    4.34
 97)  Benzo[g,h,i]perylene
            1.182 1.230 1.193 1.183 1.151 1.116                        1.176    3.29

 98) I   1,4-Dichlorobenzene-d ----------------ISTD---------------------
 99)  2-Picoline
            1.572 1.499 1.406 1.382 1.332 1.284       1.566            1.434    7.88
100)  N-Nitrosomethylethylamine
            0.767 0.728 0.696 0.702 0.692 0.688       0.725            0.714    3.96
101)  Methyl methanesulfonate
            0.756 0.703 0.681 0.671 0.663 0.626       0.708            0.687    5.98
102)  N-Nitrosodiethylamine
            0.634 0.662 0.653 0.640 0.632 0.614       0.654            0.641    2.60
103)  Ethyl methanesulfonate
            1.063 1.009 0.962 0.942 0.936 0.891       1.043            0.978    6.39
104)  Pentachloroethane
            0.524 0.510 0.492 0.488 0.469 0.455       0.520            0.494    5.25
105)  N-Nitrosopyrrolidine
            0.630 0.720 0.724 0.745 0.749 0.716       0.662            0.707    6.24
```

Initial Calibration Summary

Job Number: F77897 **Sample:** SL2516-ICC2516
Account: TETTNOAK Tetra Tech, Inc **Lab FileID:** L049102.D
Project: Holloman AFB; Alamogordo, NM

```
106)  N-Nitrosomorpholine
            0.810 0.775 0.732 0.721 0.705 0.669       0.800         0.744    7.00
107)  O-Toluidine
            2.211 2.072 1.931 1.843 1.765 1.701       2.168         1.956   10.19

108) I   Naphthalene-d8A       ----------------ISTD---------------------
109)  N-Nitrosopiperidine
            0.237 0.249 0.242 0.239 0.240 0.230       0.242         0.240    2.33
110)  A,A-Dimethylphenethylamine
            0.821 1.028 1.029 1.065 1.147 0.987       0.934         1.001   10.33
             ---- Quadratic regr., Force(0,0) ----  Coefficient =  0.9909
               Response Ratio = 0.00000 + 1.14113 *A + -0.03595 *A^2

111)  Hexachloropropene
            0.168 0.179 0.179 0.177 0.179 0.172       0.171         0.175    2.58
112)  p-Phenylenediamine
            0.376 0.401 0.381 0.328 0.317 0.311       0.390         0.358   10.50
113)  N-Nitrosodi-n-butylamine
            0.216 0.290 0.276 0.260 0.260 0.244       0.279         0.261    9.48
114)  Isosafrole
            0.272 0.280 0.268 0.260 0.258 0.244       0.268         0.264    4.39

115) I   Acenaphthene-d10A     ----------------ISTD---------------------
116)  Safrole
            0.535 0.544 0.523 0.512 0.498 0.481       0.522         0.517    4.19
117)  1-Chloronaphthalene
            1.305 1.177 1.075 1.008 0.961 0.942       1.202         1.096   12.46
118)  Diphenyl Ether
            0.894 0.814 0.771 0.742 0.704 0.689       0.862         0.782    9.97
119)  1,4-Naphthoquinone
            0.393 0.442 0.421 0.367 0.355 0.379       0.423         0.397    8.16
120)  Pentachlorobenzene
            0.520 0.482 0.449 0.434 0.419 0.405       0.498         0.458    9.31
121)  1-Naphthylamine
            1.111 1.152 1.103 1.068 1.045 1.007       1.101         1.084    4.44
122)  2-Naphthylamine
            1.220 1.222 1.134 1.112 1.079 1.030       1.209         1.144    6.64
123)  5-Nitro-o-toluidine
            0.212 0.338 0.361 0.380 0.387 0.370       0.260         0.330   20.48
             ---- Quadratic regr., Force(0,0) ----  Coefficient =  0.9982
               Response Ratio = 0.00000 + 0.36527 *A + 0.00380 *A^2


124) I   Phenanthrene-d10A     ----------------ISTD---------------------
125)  1,3,5-Trinitrobenzene
            0.052 0.103 0.131 0.163 0.182 0.174       0.068         0.125   41.72
             ---- Quadratic regr., Force(0,0) ----  Coefficient =  0.9922
               Response Ratio = 0.00000 + 0.11970 *A + 0.01971 *A^2

126)  Diallate
            0.261 0.289 0.272 0.272 0.257 0.252       0.266         0.267    4.61
127)  Phenacetin
            0.280 0.352 0.339 0.347 0.358 0.341       0.303         0.332    8.74
128)  4-aminobiphenyl
            0.751 0.798 0.731 0.684 0.605 0.564       0.733         0.695   12.04
129)  Pentachloronitrobenzene
            0.057 0.074 0.071 0.070 0.068 0.067       0.066         0.068    7.94
130)  Pronamide
            0.208 0.287 0.287 0.295 0.288 0.278       0.229         0.267   12.90
131)  4-Nitroquinoline 1-Oxide
```

```
            0.013 0.033 0.047 0.055 0.063 0.068       0.015         0.042   53.08
             ---- Quadratic regr., Force(0,0) ----  Coefficient =  0.9988
               Response Ratio = 0.00000 + 0.03142 *A + 0.01209 *A^2

132)  Methapyrilene
            0.099 0.150 0.140 0.163 0.168 0.162       0.114         0.142   18.66
133)  Isodrin
            0.117 0.117 0.106 0.109 0.106 0.102       0.111         0.110    5.14

134) I   Chrysene-d12A         ----------------ISTD---------------------
135)  Aramite
            0.017 0.030 0.035 0.037 0.040 0.038       0.020         0.031   29.06
             ---- Quadratic regr., Force(0,0) ----  Coefficient =  0.9970
               Response Ratio = 0.00000 + 0.03301 *A + 0.00190 *A^2

136)  p-(Dimethylamine)azobenzene
            0.220 0.308 0.295 0.288 0.287 0.278       0.258         0.276   10.59
137)  Chlorobenzilate
            0.293 0.357 0.339 0.331 0.331 0.316       0.320         0.327    6.13
138)  Kepone
            0.030 0.072 0.079 0.081 0.087 0.077       0.041         0.066   33.08
             ---- Quadratic regr., Force(0,0) ----  Coefficient =  0.9925
               Response Ratio = 0.00000 + 0.08183 *A + -0.00065 *A^2

139)  3,3'-Dimethylbenzidine
            0.380 0.664 0.651 0.590 0.535 0.696       0.478         0.571   19.93
140)  2-Acetylaminofluorene
            0.244 0.452 0.479 0.499 0.500 0.528       0.309         0.430   25.37
             ---- Quadratic regr., Force(0,0) ----  Coefficient =  0.9992
               Response Ratio = 0.00000 + 0.43392 *A + 0.02959 *A^2


141) I   Perylene-d12A         ----------------ISTD---------------------
142)  7,12-Dimethylbenz(a)anthracene
            0.402 0.515 0.524 0.508 0.515 0.452       0.461         0.482    9.43
143)  Hexachlorophene
                  0.001 0.018 0.032 0.037 0.048             0.057   0.032   63.35
             ---- Quadratic regr., Force(0,0) ----  Coefficient =  0.9897
               Response Ratio = 0.00000 + 0.01673 *A + 0.00084 *A^2

144)  3-Methylcholanthrene
            0.431 0.543 0.536 0.537 0.523 0.520       0.463         0.508    8.47
145)  Dibenz(a,j)acridine
            0.736 0.899 0.868 0.879 0.854 0.882       0.807         0.847    6.70
 ---------------------------------------------------------------------------
 (#) = Out of Range  ###  Number of calibration levels exceeded format  ###

           app9D.m           Mon Nov 29 06:01:06 2010
```

Initial Calibration Verification

Job Number: F77897
Account: TETTNOAK Tetra Tech, Inc
Project: Holloman AFB; Alamogordo, NM

Sample: SL2516-ICV2516
Lab FileID: L049116.D

Evaluate Continuing Calibration Report

```
Data File : C:\msdchem\2\DATA\112410\L049116.D          Vial: 17
Acq On    : 24 Nov 2010   6:33 pm                   Operator: nancyf
Sample    : icv2516-50                              Inst    : MSBNA02
Misc      : op35019,sl2516,1000,,,1,1,water         Multiplr: 1.00
MS Integration Params: lscint.p

Method       : C:\msdchem\2\METHODS\app9D.m (RTE Integrator)
Title        : SW846 8270D OR EPA 625
Last Update  : Mon Nov 29 05:58:29 2010
Response via : Multiple Level Calibration

Min. RRF     :   0.000  Min. Rel. Area :  50%  Max. R.T. Dev  0.50min
Max. RRF Dev :  20%     Max. Rel. Area : 200%
```

		Compound	Amount	Calc.	%Drift	Area%	Dev(min)	R.T.
1	I	1,4-Dichlorobenzene-d4	40.000	40.000	0.0	155	0.00	4.95
2		1,4-Dioxane	50.000	48.744	2.5	0	-0.01	2.50
3		N-nitrosodimethylamine	50.000	49.077	1.8	0	-0.01	2.79
4		Pyridine	50.000	49.998	0.0	0	-0.01	2.82
5	P	Benzaldehyde	50.000	51.160	-2.3	0	0.00	4.61
6		Aniline	50.000	50.591	-1.2	0	0.00	4.70
7	S	2-Fluorophenol		----------NA----------				
8	P	bis(2-Chloroethyl)ether	50.000	51.056	-2.1	0	0.00	4.74
9	S	Phenol-d5		----------NA----------				
10	P	Phenol	50.000	56.144	-12.3	0	0.00	4.69
11	P	2-Chlorophenol	50.000	51.707	-3.4	0	0.00	4.79
12		1,3-Dichlorobenzene	50.000	51.121	-2.2	0	0.00	4.90
13	C	1,4-Dichlorobenzene	50.000	51.106	-2.2	0	0.00	4.96
14		1,2-Dichlorobenzene	50.000	50.885	-1.8	0	0.00	5.09
15		Benzyl alcohol	50.000	57.784	-15.6	0	0.00	5.06
16	P	bis(2-chloroisopropyl)eth	50.000	50.966	-1.9	0	0.00	5.16
17	P	2-Methylphenol	50.000	50.711	-1.4	0	0.00	5.16
18	P	Acetophenone	50.000	45.246	9.5	0	0.00	5.27
19	P	Hexachloroethane	50.000	53.167	-6.3	0	0.00	5.37
20	P	N-Nitroso-di-n-propylamin	50.000	46.554	6.9	0	0.00	5.27
21	P	3&4-Methylphenol	100.000	91.677	8.3	0	0.00	5.28
22	I	Naphthalene-d8	40.000	40.000	0.0	151	0.00	6.09
23	S	Nitrobenzene-d5		----------NA----------				
24	P	Nitrobenzene	50.000	53.611	-7.2	0	0.00	5.42
25	P	Isophorone	50.000	43.890	12.2	0	0.00	5.64
26	P	2-Nitrophenol	50.000	55.466	-10.9	0	0.00	5.71
27	P	2,4-Dimethylphenol	50.000	44.339	11.3	0	0.00	5.75
28	P	bis(2-Chloroethoxy)methan	50.000	51.964	-3.9	0	0.00	5.83
		----------	Amount	Calc.	%Drift		----------	
29		Benzoic Acid	100.000	106.813	-6.8	0	0.02	5.89
		----------	Amount	Calc.	%Drift		----------	
30	P	2,4-Dichlorophenol	50.000	53.093	-6.2	0	0.00	5.95
31		1,2,4-Trichlorobenzene	50.000	48.078	3.8	0	0.00	6.03
32	P	Naphthalene	50.000	46.919	6.2	0	0.00	6.11
33		alpha-terpineol	50.000	50.148	-0.3	0	0.00	6.12
34	P	4-Chloroaniline	50.000	30.633	38.7#	0	0.00	6.17
35		2,6-Dichlorophenol	50.000	51.915	-3.8	0	0.00	6.18
36	P	Hexachlorobutadiene	50.000	52.967	-5.9	0	0.00	6.25
37	P	Caprolactam	50.000	52.492	-5.0	0	0.00	6.57

Initial Calibration Verification

Job Number: F77897
Account: TETTNOAK Tetra Tech, Inc
Project: Holloman AFB; Alamogordo, NM

Sample: SL2516-ICV2516
Lab FileID: L049116.D

38	P	4-Chloro-3-methylphenol	50.000	53.014	-6.0	0	0.01	6.73
39	P	2-Methylnaphthalene	50.000	55.930	-11.9	0	0.00	6.90
40		1-Methylnaphthalene	50.000	49.637	0.7	0	0.00	7.03
41	P	1,2,4,5-Tetrachlorobenzen	50.000	48.042	3.9	0	0.00	7.12
42	I	Acenaphthene-d10	40.000	40.000	0.0	151	0.00	8.36
43	P	Hexachlorocyclopentadiene	50.000	57.037	-14.1	0	0.00	7.12
44	P	2,4,6-Trichlorophenol	50.000	51.446	-2.9	0	0.00	7.28
45	P	2,4,5-Trichlorophenol	50.000	51.942	-3.9	0	0.00	7.33
46	S	2-Fluorobiphenyl		----------NA----------				
47	P	1,1'-Biphenyl	50.000	45.967	8.1	0	0.00	7.52
48	P	2-Chloronaphthalene	50.000	48.743	2.5	0	0.00	7.54
49	P	2-Nitroaniline	50.000	69.042	-38.1#	0	0.00	7.70
50		m-Dinitrobenzene	50.000	56.705	-13.4	0	0.00	8.01
51	P	Acenaphthylene	50.000	51.006	-2.0	0	0.00	8.14
52	P	Dimethylphthalate	50.000	50.625	-1.3	0	0.00	7.99
53	P	2,6-Dinitrotoluene	50.000	52.537	-5.1	0	0.00	8.06
54	P	Acenaphthene	50.000	50.646	-1.3	0	0.00	8.41
55	P	3-Nitroaniline	50.000	34.479	31.0#	0	0.00	8.31
		----------	Amount	Calc.	%Drift	----------		
56	P	2,4-Dinitrophenol	100.000	104.478	-4.5	0	0.00	8.48
		----------	Amount	Calc.	%Drift	----------		
57	P	Dibenzofuran	50.000	52.569	-5.1	0	0.00	8.69
58	P	2,4-Dinitrotoluene	50.000	50.208	-0.4	0	0.00	8.69
59	P	4-Nitrophenol	100.000	97.938	2.1	0	0.02	8.65
60	P	2,3,4,6-Tetrachlorophenol	50.000	53.053	-6.1	0	0.00	8.91
61	P	Fluorene	50.000	51.370	-2.7	0	0.00	9.25
62	P	4-Chlorophenyl-phenylethe	50.000	49.850	0.3	0	0.00	9.27
63	P	Diethylphthalate	50.000	51.654	-3.3	0	0.00	9.14
64	P	4-Nitroaniline	50.000	57.269	-14.5	0	0.00	9.32
65	I	Phenanthrene-d10	40.000	40.000	0.0	148	0.00	10.87
		----------	Amount	Calc.	%Drift	----------		
66	P	4,6-Dinitro-2-methylpheno	100.000	108.471	-8.5	0	0.00	9.38
		----------	Amount	Calc.	%Drift	----------		
67		Diphenylamine	50.000	43.524	13.0	0	-0.01	9.48
68	P	n-Nitrosodiphenylamine	50.000	52.229	-4.5	0	-0.01	9.48
69		1,2-Diphenylhydrazine	50.000	52.459	-4.9	0	0.00	9.54
70	S	2,4,6-Tribromophenol		----------NA----------				
71	P	4-Bromophenyl-phenylether	50.000	52.627	-5.3	0	0.00	10.11
72	P	Hexachlorobenzene	50.000	50.933	-1.9	0	0.00	10.20
73		Simazine	50.000	72.146	-44.3#	0	0.00	10.43
74	P	Atrazine	50.000	49.686	0.6	0	0.00	10.49
		----------	Amount	Calc.	%Drift	----------		
75	P	Pentachlorophenol	100.000	111.995	-12.0	0	0.00	10.57
		----------	Amount	Calc.	%Drift	----------		
76	P	Phenanthrene	50.000	49.413	1.2	0	0.00	10.91
77	P	Anthracene	50.000	50.785	-1.6	0	0.00	10.99
78	P	Carbazole	50.000	55.083	-10.2	0	0.00	11.33
79	P	Di-n-butylphthalate	50.000	52.491	-5.0	0	0.00	12.10
80	P	Fluoranthene	50.000	49.054	1.9	0	0.00	13.08
81	I	Chrysene-d12	40.000	40.000	0.0	141	0.00	15.79
82		Benzidine	50.000	27.954	44.1#	0	-0.01	13.41

Initial Calibration Verification

Job Number: F77897
Account: TETTNOAK Tetra Tech, Inc
Project: Holloman AFB; Alamogordo, NM

Sample: SL2516-ICV2516
Lab FileID: L049116.D

83	P	Pyrene	50.000	52.502	-5.0	0	-0.01	13.49
84	S	Terphenyl-d14		----------NA----------				
85	P	Butylbenzylphthalate	50.000	56.978	-14.0	0	0.00	14.92
86	P	3,3'-Dichlorobenzidine	50.000	25.905	48.2#	0	0.00	15.81
87	P	Benzo[a]anthracene	50.000	52.717	-5.4	0	0.00	15.77
88	P	Chrysene	50.000	50.798	-1.6	0	0.00	15.84
89	P	bis(2-Ethylhexyl)phthalat	50.000	58.078	-16.2	0	0.00	16.10
90	I	Perylene-d12	40.000	40.000	0.0	132	0.00	18.30
		----------	Amount	Calc.	%Drift		----------	
91	P	Di-n-octylphthalate	50.000	56.276	-12.6	0	0.00	17.28
		----------	Amount	Calc.	%Drift		----------	
92	P	Benzo[b]fluoranthene	50.000	52.806	-5.6	0	0.00	17.68
93	P	Benzo[k]fluoranthene	50.000	53.572	-7.1	0	0.00	17.73
94	P	Benzo[a]pyrene	50.000	52.622	-5.2	0	0.00	18.20
95	P	Indeno[1,2,3-cd]pyrene	50.000	52.279	-4.6	0	0.00	19.88
96	P	Dibenz[a,h]anthracene	50.000	52.138	-4.3	0	0.00	19.93
97	P	Benzo[g,h,i]perylene	50.000	49.364	1.3	0	0.00	20.25
98	I	1,4-Dichlorobenzene-d4A	40.000	40.000	0.0	120	0.00	4.95
99		2-Picoline		----------NA----------				
100		N-Nitrosomethylethylamine		----------NA----------				
101		Methyl methanesulfonate		----------NA----------				
102		N-Nitrosodiethylamine		----------NA----------				
103		Ethyl methanesulfonate		----------NA----------				
104		Pentachloroethane		----------NA----------				
105		N-Nitrosopyrrolidine		----------NA----------				
106		N-Nitrosomorpholine		----------NA----------				
107		O-Toluidine		----------NA----------				
108	I	Naphthalene-d8A	40.000	40.000	0.0	122	0.00	6.09
109		N-Nitrosopiperidine		----------NA----------				
		----------	Amount	Calc.	%Drift		----------	
110		A,A-Dimethylphenethylamin		----------NA----------				
		----------	Amount	Calc.	%Drift		----------	
111		Hexachloropropene		----------NA----------				
112		p-Phenylenediamine		----------NA----------				
113		N-Nitrosodi-n-butylamine		----------NA----------				
114		Isosafrole		----------NA----------				
115	I	Acenaphthene-d10A	40.000	40.000	0.0	120	0.00	8.36
116		Safrole		----------NA----------				
117		1-Chloronaphthalene		----------NA----------				
118		Diphenyl Ether	50.000	58.331	-16.7	0	0.00	7.67
119		1,4-Naphthoquinone		----------NA----------				
120		Pentachlorobenzene		----------NA----------				
121		1-Naphthylamine		----------NA----------				
122		2-Naphthylamine		----------NA----------				
		----------	Amount	Calc.	%Drift		----------	
123		5-Nitro-o-toluidine		----------NA----------				
		----------	Amount	Calc.	%Drift		----------	
124	I	Phenanthrene-d10A	40.000	40.000	0.0	123	0.00	10.87

Initial Calibration Verification

Job Number: F77897
Account: TETTNOAK Tetra Tech, Inc
Project: Holloman AFB; Alamogordo, NM

Sample: SL2516-ICV2516
Lab FileID: L049116.D

			Amount	Calc.	%Drift		
125		1,3,5-Trinitrobenzene		NA			
126		Diallate		NA			
127		Phenacetin		NA			
128		4-aminobiphenyl		NA			
129		Pentachloronitrobenzene		NA			
130		Pronamide		NA			
131		4-Nitroquinoline 1-Oxide		NA			
132		Methapyrilene		NA			
133		Isodrin		NA			
134	I	Chrysene-d12A	40.000	40.000	0.0	102	0.00 15.79
135		Aramite		NA			
136		p-(Dimethylamine)azobenze		NA			
137		Chlorobenzilate		NA			
138		Kepone		NA			
139		3,3'-Dimethylbenzidine		NA			
140		2-Acetylaminofluorene		NA			
141	I	Perylene-d12A	40.000	40.000	0.0	109	0.00 18.30
142		7,12-Dimethylbenz(a)anthr		NA			
143		Hexachlorophene		NA			
144		3-Methylcholanthrene		NA			
145		Dibenz(a,j)acridine		NA			

(#) = Out of Range SPCC's out = 0 CCC's out = 0
L049116.D app9D.m Mon Nov 29 06:02:09 2010

6.7.2

6

Initial Calibration Verification

Job Number: F77897
Account: TETTNOAK Tetra Tech, Inc
Project: Holloman AFB; Alamogordo, NM

Sample: SL2516-ICV2516
Lab FileID: L049117.D

Evaluate Continuing Calibration Report

```
Data File : C:\msdchem\2\DATA\112410\L049117.D          Vial: 18
Acq On    : 24 Nov 2010   7:01 pm                   Operator: nancyf
Sample    : icv2516-50                              Inst    : MSBNA02
Misc      : op35019,sl2516,1000,,,1,1,water         Multiplr: 1.00
MS Integration Params: lscint.p

Method       : C:\msdchem\2\METHODS\app9D.m (RTE Integrator)
Title        : SW846 8270D OR EPA 625
Last Update  : Mon Nov 29 05:27:47 2010
Response via : Multiple Level Calibration

Min. RRF     :   0.000  Min. Rel. Area :  50%  Max. R.T. Dev  0.50min
Max. RRF Dev :  20%     Max. Rel. Area : 200%
```

		Compound	Amount	Calc.	%Drift	Area%	Dev(min)	R.T.
1	I	1,4-Dichlorobenzene-d4	40.000	40.000	0.0	0	0.00	4.95
2		1,4-Dioxane		NA				
3		N-nitrosodimethylamine		NA				
4		Pyridine	50.000	48.465	3.1	0	-0.03	2.81
5	P	Benzaldehyde		NA				
6		Aniline	50.000	59.194	-18.4	0	0.00	4.69
7	S	2-Fluorophenol		NA				
8	P	bis(2-Chloroethyl)ether		NA				
9	S	Phenol-d5		NA				
10	P	Phenol		NA				
11	P	2-Chlorophenol		NA				
12		1,3-Dichlorobenzene		NA				
13	C	1,4-Dichlorobenzene		NA				
14		1,2-Dichlorobenzene		NA				
15		Benzyl alcohol	50.000	53.474	-6.9	0	0.00	5.06
16	P	bis(2-chloroisopropyl)eth		NA				
17	P	2-Methylphenol		NA				
18	P	Acetophenone		NA				
19	P	Hexachloroethane		NA				
20	P	N-Nitroso-di-n-propylamin		NA				
21	P	3&4-Methylphenol		NA				
22	I	Naphthalene-d8	40.000	40.000	0.0	0	0.00	6.08
23	S	Nitrobenzene-d5		NA				
24	P	Nitrobenzene		NA				
25	P	Isophorone		NA				
26	P	2-Nitrophenol		NA				
27	P	2,4-Dimethylphenol		NA				
28	P	bis(2-Chloroethoxy)methan		NA				
		----------	Amount	Calc.	%Drift	----------		
29		Benzoic Acid		NA				
		----------	Amount	Calc.	%Drift	----------		
30	P	2,4-Dichlorophenol		NA				
31		1,2,4-Trichlorobenzene		NA				
32	P	Naphthalene		NA				
33		alpha-terpineol		NA				
34	P	4-Chloroaniline	50.000	57.679	-15.4	0	0.00	6.16
35		2,6-Dichlorophenol		NA				
36	P	Hexachlorobutadiene		NA				
37	P	Caprolactam		NA				

Initial Calibration Verification

Job Number: F77897
Account: TETTNOAK Tetra Tech, Inc
Project: Holloman AFB; Alamogordo, NM

Sample: SL2516-ICV2516
Lab FileID: L049117.D

38	P	4-Chloro-3-methylphenol		----------NA----------				
39	P	2-Methylnaphthalene	50.000	56.686	-13.4	0	0.00	6.90
40		1-Methylnaphthalene		----------NA----------				
41	P	1,2,4,5-Tetrachlorobenzen		----------NA----------				
42	I	Acenaphthene-d10	40.000	40.000	0.0	0	0.00	8.36
43	P	Hexachlorocyclopentadiene		----------NA----------				
44	P	2,4,6-Trichlorophenol		----------NA----------				
45	P	2,4,5-Trichlorophenol		----------NA----------				
46	S	2-Fluorobiphenyl		----------NA----------				
47	P	1,1'-Biphenyl		----------NA----------				
48	P	2-Chloronaphthalene		----------NA----------				
49	P	2-Nitroaniline	50.000	57.264	-14.5	0	0.00	7.69
50		m-Dinitrobenzene	50.000	59.161	-18.3	0	-0.01	8.00
51	P	Acenaphthylene		----------NA----------				
52	P	Dimethylphthalate		----------NA----------				
53	P	2,6-Dinitrotoluene		----------NA----------				
54	P	Acenaphthene		----------NA----------				
55	P	3-Nitroaniline	50.000	59.502	-19.0	0	0.00	8.31
		----------	Amount	Calc.	%Drift	----------		
56	P	2,4-Dinitrophenol		----------NA----------				
		----------	Amount	Calc.	%Drift	----------		
57	P	Dibenzofuran	50.000	57.327	-14.7	0	0.00	8.69
58	P	2,4-Dinitrotoluene		----------NA----------				
59	P	4-Nitrophenol		----------NA----------				
60	P	2,3,4,6-Tetrachlorophenol		----------NA----------				
61	P	Fluorene		----------NA----------				
62	P	4-Chlorophenyl-phenylethe		----------NA----------				
63	P	Diethylphthalate		----------NA----------				
64	P	4-Nitroaniline	50.000	62.890	-25.8#	0	0.00	9.31
65	I	Phenanthrene-d10	40.000	40.000	0.0	0	0.00	10.86
		----------	Amount	Calc.	%Drift	----------		
66	P	4,6-Dinitro-2-methylpheno		----------NA----------				
		----------	Amount	Calc.	%Drift	----------		
67		Diphenylamine		----------NA----------				
68	P	n-Nitrosodiphenylamine		----------NA----------				
69		1,2-Diphenylhydrazine		----------NA----------				
70	S	2,4,6-Tribromophenol		----------NA----------				
71	P	4-Bromophenyl-phenylether		----------NA----------				
72	P	Hexachlorobenzene		----------NA----------				
73		Simazine		----------NA----------				
74	P	Atrazine		----------NA----------				
		----------	Amount	Calc.	%Drift	----------		
75	P	Pentachlorophenol		----------NA----------				
		----------	Amount	Calc.	%Drift	----------		
76	P	Phenanthrene		----------NA----------				
77	P	Anthracene		----------NA----------				
78	P	Carbazole	50.000	56.149	-12.3	0	0.00	11.32
79	P	Di-n-butylphthalate		----------NA----------				
80	P	Fluoranthene		----------NA----------				
81	I	Chrysene-d12	40.000	40.000	0.0	0	-0.01	15.78
82		Benzidine	50.000	53.277	-6.6	0	-0.02	13.41

Initial Calibration Verification

Job Number: F77897
Account: TETTNOAK Tetra Tech, Inc
Project: Holloman AFB; Alamogordo, NM

Sample: SL2516-ICV2516
Lab FileID: L049117.D

83	P	Pyrene		----------NA----------				
84	S	Terphenyl-d14		----------NA----------				
85	P	Butylbenzylphthalate		----------NA----------				
86	P	3,3'-Dichlorobenzidine	50.000	50.261	-0.5	0	0.00	15.81
87	P	Benzo[a]anthracene		----------NA----------				
88	P	Chrysene		----------NA----------				
89	P	bis(2-Ethylhexyl)phthalat		----------NA----------				
90	I	Perylene-d12	40.000	40.000	0.0	0	0.00	18.29
		----------	Amount	Calc.	%Drift		----------	
91	P	Di-n-octylphthalate		----------NA----------				
		----------	Amount	Calc.	%Drift		----------	
92	P	Benzo[b]fluoranthene		----------NA----------				
93	P	Benzo[k]fluoranthene		----------NA----------				
94	P	Benzo[a]pyrene		----------NA----------				
95	P	Indeno[1,2,3-cd]pyrene		----------NA----------				
96	P	Dibenz[a,h]anthracene		----------NA----------				
97	P	Benzo[g,h,i]perylene		----------NA----------				
98	I	1,4-Dichlorobenzene-d4A	40.000	40.000	0.0	0	0.00	4.95
99		2-Picoline		----------NA----------				
100		N-Nitrosomethylethylamine		----------NA----------				
101		Methyl methanesulfonate		----------NA----------				
102		N-Nitrosodiethylamine		----------NA----------				
103		Ethyl methanesulfonate		----------NA----------				
104		Pentachloroethane		----------NA----------				
105		N-Nitrosopyrrolidine		----------NA----------				
106		N-Nitrosomorpholine		----------NA----------				
107		O-Toluidine		----------NA----------				
108	I	Naphthalene-d8A	40.000	40.000	0.0	0	0.00	6.08
109		N-Nitrosopiperidine		----------NA----------				
		----------	Amount	Calc.	%Drift		----------	
110		A,A-Dimethylphenethylamin		----------NA----------				
		----------	Amount	Calc.	%Drift		----------	
111		Hexachloropropene		----------NA----------				
112		p-Phenylenediamine		----------NA----------				
113		N-Nitrosodi-n-butylamine		----------NA----------				
114		Isosafrole		----------NA----------				
115	I	Acenaphthene-d10A	40.000	40.000	0.0	0	0.00	8.36
116		Safrole		----------NA----------				
117		1-Chloronaphthalene		----------NA----------				
118		Diphenyl Ether	50.000	59.198	-18.4	0	0.00	7.67
119		1,4-Naphthoquinone		----------NA----------				
120		Pentachlorobenzene		----------NA----------				
121		1-Naphthylamine		----------NA----------				
122		2-Naphthylamine		----------NA----------				
		----------	Amount	Calc.	%Drift		----------	
123		5-Nitro-o-toluidine		----------NA----------				
		----------	Amount	Calc.	%Drift		----------	
124	I	Phenanthrene-d10A	40.000	40.000	0.0	0	0.00	10.86

Initial Calibration Verification

Job Number: F77897
Account: TETTNOAK Tetra Tech, Inc
Project: Holloman AFB; Alamogordo, NM

Sample: SL2516-ICV2516
Lab FileID: L049117.D

			Amount	Calc.	%Drift		
125		1,3,5-Trinitrobenzene		NA			
126		Diallate		NA			
127		Phenacetin		NA			
128		4-aminobiphenyl		NA			
129		Pentachloronitrobenzene		NA			
130		Pronamide		NA			
131		4-Nitroquinoline 1-Oxide		NA			
132		Methapyrilene		NA			
133		Isodrin		NA			
134	I	Chrysene-d12A	40.000	40.000	0.0	0	0.00	15.78
135		Aramite		NA			
136		p-(Dimethylamine)azobenze		NA			
137		Chlorobenzilate		NA			
138		Kepone		NA			
139		3,3'-Dimethylbenzidine		NA			
140		2-Acetylaminofluorene		NA			
141	I	Perylene-d12A	40.000	40.000	0.0	0	-0.01	18.29
142		7,12-Dimethylbenz(a)anthr		NA			
143		Hexachlorophene		NA			
144		3-Methylcholanthrene		NA			
145		Dibenz(a,j)acridine		NA			

(#) = Out of Range SPCC's out = 0 CCC's out = 1
L048939.D app9D.m Mon Nov 29 05:50:24 2010

6.7.3

6

Initial Calibration Verification

Job Number: F77897
Account: TETTNOAK Tetra Tech, Inc
Project: Holloman AFB; Alamogordo, NM

Sample: SL2516-ICV2516
Lab FileID: L049118.D

Evaluate Continuing Calibration Report

```
Data File : C:\msdchem\2\DATA\112410\L049118.D          Vial: 19
Acq On    : 24 Nov 2010   7:29 pm                   Operator: nancyf
Sample    : icv2516-50                              Inst    : MSBNA02
Misc      : op35019,sl2516,1000,,,1,1,water         Multiplr: 1.00
MS Integration Params: lscint.p

Method       : C:\msdchem\2\METHODS\app9D.m (RTE Integrator)
Title        : SW846 8270D OR EPA 625
Last Update  : Mon Nov 29 05:27:47 2010
Response via : Multiple Level Calibration

Min. RRF     :   0.000  Min. Rel. Area :  50%  Max. R.T. Dev  0.50min
Max. RRF Dev :  20%     Max. Rel. Area : 200%
```

		Compound	Amount	Calc.	%Drift	Area%	Dev(min)	R.T.
1	I	1,4-Dichlorobenzene-d4	40.000	40.000	0.0	0	0.00	4.95
2		1,4-Dioxane		NA				
3		N-nitrosodimethylamine		NA				
4		Pyridine		NA				
5	P	Benzaldehyde		NA				
6		Aniline		NA				
7	S	2-Fluorophenol		NA				
8	P	bis(2-Chloroethyl)ether		NA				
9	S	Phenol-d5		NA				
10	P	Phenol		NA				
11	P	2-Chlorophenol		NA				
12		1,3-Dichlorobenzene		NA				
13	C	1,4-Dichlorobenzene		NA				
14		1,2-Dichlorobenzene		NA				
15		Benzyl alcohol		NA				
16	P	bis(2-chloroisopropyl)eth		NA				
17	P	2-Methylphenol		NA				
18	P	Acetophenone		NA				
19	P	Hexachloroethane		NA				
20	P	N-Nitroso-di-n-propylamin		NA				
21	P	3&4-Methylphenol		NA				
22	I	Naphthalene-d8	40.000	40.000	0.0	0	0.00	6.08
23	S	Nitrobenzene-d5		NA				
24	P	Nitrobenzene		NA				
25	P	Isophorone		NA				
26	P	2-Nitrophenol		NA				
27	P	2,4-Dimethylphenol		NA				
28	P	bis(2-Chloroethoxy)methan		NA				
		----------	Amount	Calc.	%Drift	----------		
29		Benzoic Acid		NA				
		----------	Amount	Calc.	%Drift	----------		
30	P	2,4-Dichlorophenol		NA				
31		1,2,4-Trichlorobenzene		NA				
32	P	Naphthalene		NA				
33		alpha-terpineol		NA				
34	P	4-Chloroaniline		NA				
35		2,6-Dichlorophenol		NA				
36	P	Hexachlorobutadiene		NA				
37	P	Caprolactam		NA				

Initial Calibration Verification

Job Number: F77897
Account: TETTNOAK Tetra Tech, Inc
Project: Holloman AFB; Alamogordo, NM

Sample: SL2516-ICV2516
Lab FileID: L049118.D

38	P	4-Chloro-3-methylphenol		----------NA----------				
39	P	2-Methylnaphthalene		----------NA----------				
40		1-Methylnaphthalene		----------NA----------				
41	P	1,2,4,5-Tetrachlorobenzen		----------NA----------				
42	I	Acenaphthene-d10	40.000	40.000	0.0	0	0.00	8.36
43	P	Hexachlorocyclopentadiene		----------NA----------				
44	P	2,4,6-Trichlorophenol		----------NA----------				
45	P	2,4,5-Trichlorophenol		----------NA----------				
46	S	2-Fluorobiphenyl		----------NA----------				
47	P	1,1'-Biphenyl		----------NA----------				
48	P	2-Chloronaphthalene		----------NA----------				
49	P	2-Nitroaniline		----------NA----------				
50		m-Dinitrobenzene		----------NA----------				
51	P	Acenaphthylene		----------NA----------				
52	P	Dimethylphthalate		----------NA----------				
53	P	2,6-Dinitrotoluene		----------NA----------				
54	P	Acenaphthene		----------NA----------				
55	P	3-Nitroaniline		----------NA----------				
		----------	Amount	Calc.	%Drift	----------		
56	P	2,4-Dinitrophenol		----------NA----------				
		----------	Amount	Calc.	%Drift	----------		
57	P	Dibenzofuran		----------NA----------				
58	P	2,4-Dinitrotoluene		----------NA----------				
59	P	4-Nitrophenol		----------NA----------				
60	P	2,3,4,6-Tetrachlorophenol		----------NA----------				
61	P	Fluorene		----------NA----------				
62	P	4-Chlorophenyl-phenylethe		----------NA----------				
63	P	Diethylphthalate		----------NA----------				
64	P	4-Nitroaniline		----------NA----------				
65	I	Phenanthrene-d10	40.000	40.000	0.0	0	0.00	10.87
		----------	Amount	Calc.	%Drift	----------		
66	P	4,6-Dinitro-2-methylpheno		----------NA----------				
		----------	Amount	Calc.	%Drift	----------		
67		Diphenylamine		----------NA----------				
68	P	n-Nitrosodiphenylamine		----------NA----------				
69		1,2-Diphenylhydrazine		----------NA----------				
70	S	2,4,6-Tribromophenol		----------NA----------				
71	P	4-Bromophenyl-phenylether		----------NA----------				
72	P	Hexachlorobenzene		----------NA----------				
73		Simazine		----------NA----------				
74	P	Atrazine		----------NA----------				
		----------	Amount	Calc.	%Drift	----------		
75	P	Pentachlorophenol		----------NA----------				
		----------	Amount	Calc.	%Drift	----------		
76	P	Phenanthrene		----------NA----------				
77	P	Anthracene		----------NA----------				
78	P	Carbazole		----------NA----------				
79	P	Di-n-butylphthalate		----------NA----------				
80	P	Fluoranthene		----------NA----------				
81	I	Chrysene-d12	40.000	40.000	0.0	0	0.00	15.79
82		Benzidine		----------NA----------				

Initial Calibration Verification

Job Number: F77897
Account: TETTNOAK Tetra Tech, Inc
Project: Holloman AFB; Alamogordo, NM

Sample: SL2516-ICV2516
Lab FileID: L049118.D

83	P	Pyrene		----------NA----------				
84	S	Terphenyl-d14		----------NA----------				
85	P	Butylbenzylphthalate		----------NA----------				
86	P	3,3'-Dichlorobenzidine		----------NA----------				
87	P	Benzo[a]anthracene		----------NA----------				
88	P	Chrysene		----------NA----------				
89	P	bis(2-Ethylhexyl)phthalat		----------NA----------				
90	I	Perylene-d12	40.000	40.000	0.0	0	0.00	18.29
		----------	Amount	Calc.	%Drift		----------	
91	P	Di-n-octylphthalate		----------NA----------				
		----------	Amount	Calc.	%Drift		----------	
92	P	Benzo[b]fluoranthene		----------NA----------				
93	P	Benzo[k]fluoranthene		----------NA----------				
94	P	Benzo[a]pyrene		----------NA----------				
95	P	Indeno[1,2,3-cd]pyrene		----------NA----------				
96	P	Dibenz[a,h]anthracene		----------NA----------				
97	P	Benzo[g,h,i]perylene		----------NA----------				
98	I	1,4-Dichlorobenzene-d4A	40.000	40.000	0.0	0	0.00	4.95
99		2-Picoline	50.000	51.400	-2.8	0	0.00	3.47
100		N-Nitrosomethylethylamine	50.000	50.404	-0.8	0	0.00	3.57
101		Methyl methanesulfonate	50.000	55.976	-12.0	0	0.00	3.81
102		N-Nitrosodiethylamine	50.000	55.873	-11.7	0	0.00	4.12
103		Ethyl methanesulfonate	50.000	51.611	-3.2	0	0.00	4.36
104		Pentachloroethane	50.000	53.437	-6.9	0	0.00	4.73
105		N-Nitrosopyrrolidine	50.000	57.097	-14.2	0	0.00	5.25
106		N-Nitrosomorpholine	50.000	53.054	-6.1	0	0.00	5.28
107		O-Toluidine	50.000	51.891	-3.8	0	0.00	5.30
108	I	Naphthalene-d8A	40.000	40.000	0.0	0	0.00	6.08
109		N-Nitrosopiperidine	50.000	56.459	-12.9	0	0.00	5.55
		----------	Amount	Calc.	%Drift		----------	
110		A,A-Dimethylphenethylamin	50.000	51.958	-3.9	0	-0.07	5.92
		----------	Amount	Calc.	%Drift		----------	
111		Hexachloropropene	50.000	58.370	-16.7	0	0.00	6.21
112		p-Phenylenediamine	50.000	57.453	-14.9	0	0.00	6.55
113		N-Nitrosodi-n-butylamine	50.000	46.857	6.3	0	0.00	6.54
114		Isosafrole	50.000	57.779	-15.6	0	0.00	6.79
115	I	Acenaphthene-d10A	40.000	40.000	0.0	0	0.00	8.36
116		Safrole	50.000	55.240	-10.5	0	0.00	7.47
117		1-Chloronaphthalene	50.000	49.632	0.7	0	0.00	7.58
118		Diphenyl Ether		----------NA----------				
119		1,4-Naphthoquinone	50.000	46.753	6.5	0	0.00	7.79
120		Pentachlorobenzene	50.000	52.760	-5.5	0	0.00	8.63
121		1-Naphthylamine	50.000	59.836	-19.7	0	0.00	8.81
122		2-Naphthylamine	50.000	58.899	-17.8	0	0.00	8.94
		----------	Amount	Calc.	%Drift		----------	
123		5-Nitro-o-toluidine	50.000	54.922	-9.8	0	0.00	9.29
		----------	Amount	Calc.	%Drift		----------	
124	I	Phenanthrene-d10A	40.000	40.000	0.0	0	0.00	10.87

Initial Calibration Verification

Job Number: F77897
Account: TETTNOAK Tetra Tech, Inc
Project: Holloman AFB; Alamogordo, NM

Sample: SL2516-ICV2516
Lab FileID: L049118.D

			Amount	Calc.	%Drift			
125		1,3,5-Trinitrobenzene	50.000	64.335	-28.7#	0	0.00	9.98
126		Diallate	50.000	55.550	-11.1	0	0.00	10.01
127		Phenacetin	50.000	58.466	-16.9	0	0.00	10.08
128		4-aminobiphenyl	50.000	55.753	-11.5	0	0.00	10.58
129		Pentachloronitrobenzene	50.000	58.102	-16.2	0	0.00	10.58
130		Pronamide	50.000	61.798	-23.6#	0	0.00	10.76
131		4-Nitroquinoline 1-Oxide	50.000	66.004	-32.0#	0	0.00	12.34
132		Methapyrilene	50.000	148.335	-196.7#	0	0.00	12.58
133		Isodrin	50.000	53.966	-7.9	0	0.00	12.81
134	I	Chrysene-d12A	40.000	40.000	0.0	0	0.00	15.79
135		Aramite	50.000	81.723	-63.4#	0	0.00	13.95
136		p-(Dimethylamine)azobenze	50.000	62.534	-25.1#	0	0.00	14.17
137		Chlorobenzilate	50.000	58.479	-17.0	0	0.00	14.31
138		Kepone	50.000	52.638	-5.3	0	0.00	14.79
139		3,3'-Dimethylbenzidine	50.000	70.990	-42.0#	0	0.00	14.82
140		2-Acetylaminofluorene	50.000	56.404	-12.8	0	0.00	15.28
141	I	Perylene-d12A	40.000	40.000	0.0	0	-0.01	18.29
142		7,12-Dimethylbenz(a)anthr	50.000	55.471	-10.9	0	0.00	17.69
143		Hexachlorophene			NA			
144		3-Methylcholanthrene	50.000	56.260	-12.5	0	0.00	18.79
145		Dibenz(a,j)acridine	50.000	55.228	-10.5	0	0.00	19.66

(#) = Out of Range SPCC's out = 0 CCC's out = 1
L048939.D app9D.m Mon Nov 29 05:45:02 2010

6.7.4

6

Initial Calibration Summary

Job Number: F77897
Account: TETTNOAK Tetra Tech, Inc
Project: Holloman AFB; Alamogordo, NM

Sample: SU1052-ICC1052
Lab FileID: U021947.D

Response Factor Report MSBNA04

Method : C:\msdchem\2\METHODS\8270d.m (RTE Integrator)
Title : SW846 8270D OR EPA 625
Last Update : Tue Nov 09 06:41:16 2010
Response via : Initial Calibration

Calibration Files
5 =U021944.D 25 =U021945.D 50 =U021946.D 75 =U021947.D
100 =U021948.D 125 =U021949.D icv =U021950.D

Compound	5	25	50	75	100	125	icv	Avg	%RSD
1) I 1,4-Dichlorobenzene-d				ISTD					
2) 1,4-Dioxane	0.563	0.546	0.523	0.542	0.550	0.542		0.544	2.38
3) N-nitrosodimethyl	0.802	0.783	0.739	0.742	0.748	0.737		0.758	3.59
4) Pyridine	1.175	1.454	1.501	1.536	1.549	1.521		1.456	9.73
5)P Benzaldehyde	1.471	1.383	1.238	1.347	1.242	1.269		1.325	6.99
6) Aniline	2.623	2.581	2.458	2.422	2.353	2.328		2.461	4.86
7)S 2-Fluorophenol	1.497	1.464	1.355	1.345	1.335	1.323		1.387	5.37
8)P bis(2-Chloroethyl	1.577	1.605	1.487	1.506	1.501	1.475		1.525	3.47
9)S Phenol-d5	1.894	1.891	1.768	1.725	1.689	1.684		1.775	5.40
10)P Phenol	2.260	2.242	2.109	2.036	1.943	1.937		2.088	6.77
11)P 2-Chlorophenol	1.615	1.639	1.551	1.562	1.570	1.557		1.582	2.28
12) 1,3-Dichlorobenze	1.755	1.679	1.562	1.553	1.560	1.537		1.608	5.51
13) 1,4-Dichlorobenze	1.735	1.692	1.567	1.560	1.546	1.544		1.607	5.21
14) 1,2-Dichlorobenze	1.626	1.599	1.492	1.492	1.477	1.480		1.527	4.35
15) Benzyl alcohol	1.104	1.109	1.057	1.068	1.051	1.055		1.074	2.41
16)P bis(2-chloroisopr	2.727	2.681	2.493	2.447	2.354	2.333		2.506	6.58
17)P 2-Methylphenol	1.498	1.502	1.443	1.430	1.407	1.399		1.446	3.08
18)P Acetophenone	2.423	2.204	2.092	2.092	2.000	2.052		2.144	7.12
19)P Hexachloroethane	0.653	0.647	0.613	0.609	0.614	0.613		0.625	3.15
20)P N-Nitroso-di-n-pr	1.168	1.193	1.117	1.135	1.110	1.111		1.139	3.02
21)P 3&4-Methylphenol	1.624	1.599	1.520	1.492	1.465	1.451		1.525	4.69
22) I Naphthalene-d8				ISTD					
23)S Nitrobenzene-d5	0.428	0.412	0.375	0.357	0.348	0.323		0.374	10.68
24)P Nitrobenzene	0.439	0.420	0.378	0.363	0.349	0.324		0.379	11.46
25)P Isophorone	0.812	0.771	0.711	0.675	0.645	0.609		0.704	10.94
26)P 2-Nitrophenol	0.216	0.215	0.197	0.190	0.184	0.171		0.195	9.09
27)P 2,4-Dimethylpheno	0.395	0.385	0.352	0.337	0.322	0.298		0.348	10.59
28)P bis(2-Chloroethox	0.468	0.449	0.407	0.383	0.365	0.338		0.402	12.40
29) Benzoic Acid	0.256	0.331	0.334	0.331	0.320	0.308		0.313	9.48
30)P 2,4-Dichloropheno	0.314	0.310	0.282	0.270	0.258	0.240		0.279	10.36
31) 1,2,4-Trichlorobe	0.342	0.330	0.294	0.279	0.269	0.250		0.294	12.08
32)P Naphthalene	1.166	1.097	0.984	0.918	0.870	0.806		0.973	14.10
33) alpha-Terpineol	0.348	0.343	0.310	0.292	0.274	0.257		0.304	12.00
34)P 4-Chloroaniline	0.511	0.491	0.445	0.412	0.387	0.363		0.435	13.45
35) 2,6-Dichloropheno	0.323	0.307	0.277	0.258	0.244	0.229		0.273	13.42
36)P Hexachlorobutadie	0.168	0.165	0.145	0.137	0.133	0.123		0.145	12.22
37)P Caprolactam	0.145	0.134	0.129	0.127	0.119	0.116		0.128	8.05
38)P 4-Chloro-3-methyl	0.338	0.330	0.309	0.294	0.281	0.266		0.303	9.24
39)P 2-Methylnaphthale	0.741	0.700	0.638	0.600	0.569	0.531		0.630	12.64
40) 1-Methylnaphthale	0.699	0.673	0.613	0.577	0.548	0.510		0.603	12.04
41)P 1,2,4,5-Tetrachlo	0.300	0.291	0.266	0.251	0.241	0.226		0.263	10.92
42) I Acenaphthene-d10				ISTD					
43)P Hexachlorocyclope	0.299	0.346	0.337	0.346	0.367	0.360		0.342	7.02
44)P 2,4,6-Trichloroph	0.425	0.422	0.411	0.413	0.425	0.420		0.419	1.44

Initial Calibration Summary

Job Number: F77897
Account: TETTNOAK Tetra Tech, Inc
Project: Holloman AFB; Alamogordo, NM

Sample: SU1052-ICC1052
Lab FileID: U021947.D

```
45)P 2,4,5-Trichloroph 0.450 0.461 0.437 0.445 0.456 0.454       0.451   1.88
46)S 2-Fluorobiphenyl  1.468 1.447 1.347 1.352 1.381 1.346       1.390   3.89
47)P 1,1'-Biphenyl     1.835 1.675 1.591 1.612 1.624 1.625       1.660   5.42
48)P 2-Chloronaphthale 1.312 1.315 1.234 1.231 1.253 1.232       1.263   3.19
49)P 2-Nitroaniline    0.433 0.458 0.440 0.450 0.464 0.458       0.450   2.60
50)P Acenaphthylene    2.075 2.095 1.962 1.959 1.979 1.950       2.003   3.22
51)P Dimethylphthalate 1.484 1.508 1.457 1.464 1.472 1.478       1.477   1.23
52)  m-Dinitrobenzene  0.224 0.261 0.257 0.268 0.272 0.277       0.260   7.34
53)P 2,6-Dinitrotoluen 0.335 0.349 0.337 0.342 0.345 0.341       0.341   1.50
54)P Acenaphthene      1.254 1.263 1.199 1.206 1.223 1.201       1.224   2.29
55)P 3-Nitroaniline    0.400 0.422 0.413 0.419 0.424 0.424       0.417   2.21
56)P 2,4-Dinitrophenol 0.067 0.149 0.174 0.206 0.217 0.231       0.174  34.74
             ---- Quadratic regr., Force(0,0) ----  Coefficient =  0.9989
               Response Ratio = 0.00000 + 0.14735 *A + 0.02728 *A^2

57)P Dibenzofuran      1.805 1.803 1.688 1.672 1.664 1.652       1.714   4.14
58)P 2,4-Dinitrotoluen 0.398 0.457 0.455 0.474 0.474 0.483       0.457   6.78
59)P 4-Nitrophenol     0.205 0.224 0.228 0.228 0.225 0.228       0.223   3.98
60)P 2,3,4,6-Tetrachlo 0.330 0.348 0.338 0.349 0.356 0.353       0.346   2.90
61)P Fluorene          1.459 1.455 1.371 1.391 1.390 1.371       1.406   2.86
62)P 4-Chlorophenyl-ph 0.645 0.643 0.599 0.599 0.604 0.598       0.615   3.73
63)P Diethylphthalate  1.423 1.454 1.411 1.424 1.407 1.406       1.421   1.28
64)P 4-Nitroaniline    0.384 0.415 0.417 0.434 0.432 0.443       0.421   4.95

65) I   Phenanthrene-d10      ----------------ISTD---------------------
66)P 4,6-Dinitro-2-met 0.094 0.150 0.155 0.163 0.168 0.169       0.150  19.06
67)P n-Nitrosodiphenyl 0.640 0.639 0.586 0.575 0.583 0.568       0.599   5.41
68)  1,2-Diphenylhydra 0.929 0.937 0.851 0.930 0.943 0.909       0.917   3.72
69)S 2,4,6-Tribromophe 0.106 0.105 0.100 0.100 0.104 0.102       0.103   2.46
70)P 4-Bromophenyl-phe 0.208 0.221 0.203 0.202 0.204 0.200       0.206   3.71
71)P Hexachlorobenzene 0.214 0.221 0.206 0.204 0.210 0.204       0.210   3.17
72)  Simazine          0.101 0.105 0.101 0.100 0.101 0.099       0.101   1.78
73)P Atrazine          0.239 0.231 0.222 0.227 0.222 0.225       0.228   2.88
74)P Pentachlorophenol 0.138 0.150 0.147 0.149 0.149 0.149       0.147   3.19
75)P Phenanthrene      1.209 1.197 1.118 1.096 1.109 1.084       1.135   4.73
76)P Anthracene        1.221 1.213 1.138 1.114 1.127 1.109       1.154   4.35
77)P Carbazole         1.170 1.199 1.135 1.120 1.114 1.116       1.142   3.06
78)P Di-n-butylphthala 1.331 1.401 1.319 1.310 1.266 1.259       1.314   3.90
79)P Fluoranthene      1.132 1.182 1.134 1.142 1.110 1.143       1.141   2.06

80) I   Chrysene-d12          ----------------ISTD---------------------
81)  Benzidine         0.899 0.905 0.860 0.855 0.878 0.832       0.871   3.19
82)P Pyrene            1.353 1.331 1.249 1.217 1.277 1.179       1.268   5.24
83)S Terphenyl-d14     0.755 0.745 0.711 0.699 0.732 0.679       0.720   4.04
84)P Butylbenzylphthal 0.598 0.619 0.593 0.593 0.595 0.568       0.594   2.72
85)P 3,3'-Dichlorobenz 0.435 0.459 0.442 0.446 0.453 0.456       0.448   2.04
86)P Benzo[a]anthracen 1.149 1.201 1.156 1.153 1.177 1.167       1.168   1.67
87)P Chrysene          1.154 1.161 1.102 1.098 1.120 1.103       1.123   2.46
88)P bis(2-Ethylhexyl) 0.810 0.821 0.791 0.780 0.770 0.740       0.785   3.70

89) I   Perylene-d12          ----------------ISTD---------------------
90)P Di-n-octylphthala 1.346 1.401 1.375 1.360 1.294 1.314       1.349   2.91
91)P Benzo[b]fluoranth 1.084 1.146 1.124 1.158 1.161 1.200       1.146   3.39
92)P Benzo[k]fluoranth 1.191 1.210 1.152 1.125 1.139 1.147       1.161   2.80
93)P Benzo[a]pyrene    1.092 1.150 1.117 1.116 1.152 1.152       1.130   2.25
94)P Indeno[1,2,3-cd]p 1.047 1.129 1.082 1.110 1.191 1.189       1.125   5.12
95)P Dibenz[a,h]anthra 1.084 1.120 1.060 1.076 1.125 1.121       1.098   2.52
96)P Benzo[g,h,i]peryl 1.218 1.189 1.130 1.140 1.196 1.189       1.177   2.91
-------------------------------------------------------------------------------
(#) = Out of Range
```

Initial Calibration Summary

Job Number: F77897
Account: TETTNOAK Tetra Tech, Inc
Project: Holloman AFB; Alamogordo, NM

Sample: SU1052-ICC1052
Lab FileID: U021947.D

8270d.m Tue Nov 09 06:49:37 2010

Initial Calibration Verification

Job Number: F77897
Account: TETTNOAK Tetra Tech, Inc
Project: Holloman AFB; Alamogordo, NM

Sample: SU1052-ICV1052
Lab FileID: U021950.D

Evaluate Continuing Calibration Report

Data File : C:\msdchem\2\DATA\110810\U021950.D Vial: 8
Acq On : 8 Nov 2010 1:33 pm Operator: nancyf
Sample : icv1052-50 Inst : MSBNA04
Misc : op34713,su1052,1000,,,1,1,water Multiplr: 1.00
MS Integration Params: RTEINT.P

Method : C:\msdchem\2\METHODS\8270d.m (RTE Integrator)
Title : SW846 8270D OR EPA 625
Last Update : Tue Nov 09 06:41:16 2010
Response via : Multiple Level Calibration

Min. RRF : 0.000 Min. Rel. Area : 50% Max. R.T. Dev 0.50min
Max. RRF Dev : 20% Max. Rel. Area : 200%

		Compound	Amount	Calc.	%Drift	Area%	Dev(min)	R.T.
1	I	1,4-Dichlorobenzene-d4	40.000	40.000	0.0	108	0.00	4.98
2		1,4-Dioxane	50.000	44.727	10.5	0	0.00	2.57
3		N-nitrosodimethylamine	50.000	45.704	8.6	0	0.00	2.91
4		Pyridine		----------NA----------				
5	P	Benzaldehyde	50.000	46.985	6.0	0	0.00	4.65
6		Aniline		----------NA----------				
7	S	2-Fluorophenol		----------NA----------				
8	P	bis(2-Chloroethyl)ether	50.000	48.540	2.9	0	0.00	4.79
9	S	Phenol-d5		----------NA----------				
10	P	Phenol	50.000	48.522	3.0	0	0.00	4.75
11	P	2-Chlorophenol	50.000	49.709	0.6	0	0.00	4.84
12		1,3-Dichlorobenzene	50.000	47.472	5.1	0	0.00	4.95
13		1,4-Dichlorobenzene	50.000	48.256	3.5	0	0.00	4.99
14		1,2-Dichlorobenzene	50.000	48.335	3.3	0	0.00	5.15
15		Benzyl alcohol		----------NA----------				
16	P	bis(2-chloroisopropyl)eth	50.000	49.720	0.6	0	0.00	5.22
17	P	2-Methylphenol	50.000	45.998	8.0	0	0.00	5.21
18	P	Acetophenone	50.000	42.508	15.0	0	0.00	5.33
19	P	Hexachloroethane	50.000	48.290	3.4	0	0.00	5.40
20	P	N-Nitroso-di-n-propylamin	50.000	44.321	11.4	0	0.00	5.34
21	P	3&4-Methylphenol	100.000	86.071	13.9	0	0.00	5.33
22	I	Naphthalene-d8	40.000	40.000	0.0	99	0.00	6.13
23	S	Nitrobenzene-d5		----------NA----------				
24	P	Nitrobenzene	50.000	48.271	3.5	0	0.00	5.48
25	P	Isophorone	50.000	39.181	21.6#	0	0.00	5.68
26	P	2-Nitrophenol	50.000	51.296	-2.6	0	0.00	5.78
27	P	2,4-Dimethylphenol	50.000	43.445	13.1	0	0.00	5.79
28	P	bis(2-Chloroethoxy)methan	50.000	50.995	-2.0	0	0.00	5.88
29		Benzoic Acid	100.000	98.508	1.5	0	0.00	5.93
30	P	2,4-Dichlorophenol	50.000	51.684	-3.4	0	0.00	6.00
31		1,2,4-Trichlorobenzene	50.000	46.405	7.2	0	0.00	6.09
32	P	Naphthalene	50.000	49.053	1.9	0	0.00	6.15
33		alpha-Terpineol	50.000	48.674	2.7	0	0.00	6.13
34	P	4-Chloroaniline		----------NA----------				
35		2,6-Dichlorophenol	50.000	48.799	2.4	0	0.00	6.24
36	P	Hexachlorobutadiene	50.000	50.698	-1.4	0	0.00	6.33
37	P	Caprolactam	50.000	45.295	9.4	0	0.00	6.60
38	P	4-Chloro-3-methylphenol	50.000	49.659	0.7	0	0.00	6.77
39	P	2-Methylnaphthalene		----------NA----------				
40		1-Methylnaphthalene	50.000	47.637	4.7	0	0.00	7.07
41	P	1,2,4,5-Tetrachlorobenzen	50.000	46.749	6.5	0	0.00	7.20

Initial Calibration Verification

Job Number: F77897
Account: TETTNOAK Tetra Tech, Inc
Project: Holloman AFB; Alamogordo, NM

Sample: SU1052-ICV1052
Lab FileID: U021950.D

42	I	Acenaphthene-d10	40.000	40.000	0.0	103	0.00	8.43
43	P	Hexachlorocyclopentadiene	50.000	50.522	-1.0	0	0.00	7.22
44	P	2,4,6-Trichlorophenol	50.000	48.618	2.8	0	0.00	7.34
45	P	2,4,5-Trichlorophenol	50.000	47.042	5.9	0	0.00	7.39
46	S	2-Fluorobiphenyl		----------NA----------				
47	P	1,1'-Biphenyl	50.000	44.722	10.6	0	0.00	7.56
48	P	2-Chloronaphthalene	50.000	46.812	6.4	0	0.00	7.58
49	P	2-Nitroaniline		----------NA----------				
50	P	Acenaphthylene	50.000	46.426	7.1	0	0.00	8.19
51	P	Dimethylphthalate	50.000	48.140	3.7	0	0.00	8.09
52		m-Dinitrobenzene		----------NA----------				
53	P	2,6-Dinitrotoluene	50.000	44.596	10.8	0	0.00	8.20
54	P	Acenaphthene	50.000	47.189	5.6	0	0.00	8.47
55	P	3-Nitroaniline		----------NA----------				
		----------	Amount	Calc.	%Drift	----------		
56	P	2,4-Dinitrophenol	100.000	86.676	13.3	0	0.00	8.57
		----------	Amount	Calc.	%Drift	----------		
57	P	Dibenzofuran		----------NA----------				
58	P	2,4-Dinitrotoluene	50.000	46.353	7.3	0	0.00	8.82
59	P	4-Nitrophenol	100.000	95.160	4.8	0	0.00	8.71
60	P	2,3,4,6-Tetrachlorophenol	50.000	45.272	9.5	0	0.00	9.01
61	P	Fluorene	50.000	46.260	7.5	0	0.00	9.28
62	P	4-Chlorophenyl-phenylethe	50.000	48.319	3.4	0	0.00	9.30
63	P	Diethylphthalate	50.000	47.915	4.2	0	0.00	9.23
64	P	4-Nitroaniline		----------NA----------				
65	I	Phenanthrene-d10	40.000	40.000	0.0	96	0.00	10.89
66	P	4,6-Dinitro-2-methylpheno	100.000	109.481	-9.5	0	0.00	9.48
67	P	n-Nitrosodiphenylamine	50.000	47.037	5.9	0	0.00	9.53
68		1,2-Diphenylhydrazine	50.000	45.270	9.5	0	0.00	9.56
69	S	2,4,6-Tribromophenol		----------NA----------				
70	P	4-Bromophenyl-phenylether	50.000	48.725	2.5	0	0.00	10.13
71	P	Hexachlorobenzene	50.000	47.392	5.2	0	0.00	10.37
72		Simazine	50.000	64.768	-29.5#	0	0.00	10.48
73	P	Atrazine	50.000	45.820	8.4	0	0.00	10.55
74	P	Pentachlorophenol	100.000	98.852	1.1	0	0.00	10.70
75	P	Phenanthrene	50.000	47.473	5.1	0	0.00	10.93
76	P	Anthracene	50.000	48.044	3.9	0	0.00	11.00
77	P	Carbazole		----------NA----------				
78	P	Di-n-butylphthalate	50.000	48.136	3.7	0	0.00	12.16
79	P	Fluoranthene	50.000	48.404	3.2	0	0.00	13.11
80	I	Chrysene-d12	40.000	40.000	0.0	90	0.00	15.81
81		Benzidine		----------NA----------				
82	P	Pyrene	50.000	48.044	3.9	0	0.00	13.51
83	S	Terphenyl-d14		----------NA----------				
84	P	Butylbenzylphthalate	50.000	49.512	1.0	0	0.00	14.95
85	P	3,3'-Dichlorobenzidine		----------NA----------				
86	P	Benzo[a]anthracene	50.000	48.318	3.4	0	0.00	15.78
87	P	Chrysene	50.000	48.481	3.0	0	0.00	15.85
88	P	bis(2-Ethylhexyl)phthalat	50.000	49.725	0.5	0	0.00	16.12
89	I	Perylene-d12	40.000	40.000	0.0	82	0.00	18.32
90	P	Di-n-octylphthalate	50.000	54.258	-8.5	0	0.00	17.22
91	P	Benzo[b]fluoranthene	50.000	48.612	2.8	0	0.00	17.71
92	P	Benzo[k]fluoranthene	50.000	50.388	-0.8	0	0.00	17.75
93	P	Benzo[a]pyrene	50.000	48.438	3.1	0	0.00	18.22

Initial Calibration Verification

Job Number: F77897
Account: TETTNOAK Tetra Tech, Inc
Project: Holloman AFB; Alamogordo, NM

Sample: SU1052-ICV1052
Lab FileID: U021950.D

94	P	Indeno[1,2,3-cd]pyrene	50.000	47.656	4.7	0	0.00	19.91
95	P	Dibenz[a,h]anthracene	50.000	48.258	3.5	0	0.00	19.95
96	P	Benzo[g,h,i]perylene	50.000	48.265	3.5	0	0.00	20.28

(#) = Out of Range SPCC's out = 0 CCC's out = 0
U021950.D 8270d.m Tue Nov 09 06:49:16 2010

Initial Calibration Verification

Job Number: F77897
Account: TETTNOAK Tetra Tech, Inc
Project: Holloman AFB; Alamogordo, NM

Sample: SU1052-ICV1052
Lab FileID: U021951.D

Evaluate Continuing Calibration Report

```
Data File : C:\msdchem\2\DATA\110810\U021951.D          Vial: 9
Acq On    :  8 Nov 2010   2:03 pm                   Operator: nancyf
Sample    : icv1052-50                              Inst    : MSBNA04
Misc      : op34713,su1052,1000,,,1,1,water         Multiplr: 1.00
MS Integration Params: RTEINT.P

Method       : C:\msdchem\2\METHODS\8270d.m (RTE Integrator)
Title        : SW846 8270D OR EPA 625
Last Update  : Tue Nov 09 06:41:16 2010
Response via : Multiple Level Calibration

Min. RRF     :   0.000  Min. Rel. Area :  50%  Max. R.T. Dev  0.50min
Max. RRF Dev :  20%     Max. Rel. Area : 200%
```

		Compound	Amount	Calc.	%Drift	Area%	Dev(min)	R.T.
1	I	1,4-Dichlorobenzene-d4	40.000	40.000	0.0	99	0.00	4.98
2		1,4-Dioxane		NA				
3		N-nitrosodimethylamine		NA				
4		Pyridine	50.000	46.624	6.8	0	0.02	2.92
5	P	Benzaldehyde		NA				
6		Aniline	50.000	49.806	0.4	0	0.00	4.76
7	S	2-Fluorophenol		NA				
8	P	bis(2-Chloroethyl)ether		NA				
9	S	Phenol-d5		NA				
10	P	Phenol		NA				
11	P	2-Chlorophenol		NA				
12		1,3-Dichlorobenzene		NA				
13		1,4-Dichlorobenzene		NA				
14		1,2-Dichlorobenzene		NA				
15		Benzyl alcohol	50.000	49.056	1.9	0	0.00	5.11
16	P	bis(2-chloroisopropyl)eth		NA				
17	P	2-Methylphenol		NA				
18	P	Acetophenone		NA				
19	P	Hexachloroethane		NA				
20	P	N-Nitroso-di-n-propylamin		NA				
21	P	3&4-Methylphenol		NA				
22	I	Naphthalene-d8	40.000	40.000	0.0	85	0.00	6.13
23	S	Nitrobenzene-d5		NA				
24	P	Nitrobenzene		NA				
25	P	Isophorone		NA				
26	P	2-Nitrophenol		NA				
27	P	2,4-Dimethylphenol		NA				
28	P	bis(2-Chloroethoxy)methan		NA				
29		Benzoic Acid		NA				
30	P	2,4-Dichlorophenol		NA				
31		1,2,4-Trichlorobenzene		NA				
32	P	Naphthalene		NA				
33		alpha-Terpineol		NA				
34	P	4-Chloroaniline	50.000	56.434	-12.9	0	0.00	6.23
35		2,6-Dichlorophenol		NA				
36	P	Hexachlorobutadiene		NA				
37	P	Caprolactam		NA				
38	P	4-Chloro-3-methylphenol		NA				
39	P	2-Methylnaphthalene	50.000	51.571	-3.1	0	0.00	6.93
40		1-Methylnaphthalene		NA				
41	P	1,2,4,5-Tetrachlorobenzen		NA				

Initial Calibration Verification

Job Number: F77897
Account: TETTNOAK Tetra Tech, Inc
Project: Holloman AFB; Alamogordo, NM

Sample: SU1052-ICV1052
Lab FileID: U021951.D

42	I	Acenaphthene-d10	40.000	40.000	0.0	96	0.00	8.42
43	P	Hexachlorocyclopentadiene		----------NA----------				
44	P	2,4,6-Trichlorophenol		----------NA----------				
45	P	2,4,5-Trichlorophenol		----------NA----------				
46	S	2-Fluorobiphenyl		----------NA----------				
47	P	1,1'-Biphenyl		----------NA----------				
48	P	2-Chloronaphthalene		----------NA----------				
49	P	2-Nitroaniline	50.000	49.303	1.4	0	0.00	7.78
50	P	Acenaphthylene		----------NA----------				
51	P	Dimethylphthalate		----------NA----------				
52		m-Dinitrobenzene	50.000	46.490	7.0	0	-0.01	8.12
53	P	2,6-Dinitrotoluene		----------NA----------				
54	P	Acenaphthene		----------NA----------				
55	P	3-Nitroaniline	50.000	48.992	2.0	0	-0.01	8.41
		----------	Amount	Calc.	%Drift	----------		
56	P	2,4-Dinitrophenol		----------NA----------				
		----------	Amount	Calc.	%Drift	----------		
57	P	Dibenzofuran	50.000	47.967	4.1	0	0.00	8.72
58	P	2,4-Dinitrotoluene		----------NA----------				
59	P	4-Nitrophenol		----------NA----------				
60	P	2,3,4,6-Tetrachlorophenol		----------NA----------				
61	P	Fluorene		----------NA----------				
62	P	4-Chlorophenyl-phenylethe		----------NA----------				
63	P	Diethylphthalate		----------NA----------				
64	P	4-Nitroaniline	50.000	48.896	2.2	0	-0.02	9.41
65	I	Phenanthrene-d10	40.000	40.000	0.0	90	0.00	10.88
66	P	4,6-Dinitro-2-methylpheno		----------NA----------				
67	P	n-Nitrosodiphenylamine		----------NA----------				
68		1,2-Diphenylhydrazine		----------NA----------				
69	S	2,4,6-Tribromophenol		----------NA----------				
70	P	4-Bromophenyl-phenylether		----------NA----------				
71	P	Hexachlorobenzene		----------NA----------				
72		Simazine		----------NA----------				
73	P	Atrazine		----------NA----------				
74	P	Pentachlorophenol		----------NA----------				
75	P	Phenanthrene		----------NA----------				
76	P	Anthracene		----------NA----------				
77	P	Carbazole	50.000	47.697	4.6	0	0.00	11.34
78	P	Di-n-butylphthalate		----------NA----------				
79	P	Fluoranthene		----------NA----------				
80	I	Chrysene-d12	40.000	40.000	0.0	78	0.00	15.80
81		Benzidine	50.000	53.418	-6.8	0	0.00	13.44
82	P	Pyrene		----------NA----------				
83	S	Terphenyl-d14		----------NA----------				
84	P	Butylbenzylphthalate		----------NA----------				
85	P	3,3'-Dichlorobenzidine	50.000	49.065	1.9	0	-0.01	15.84
86	P	Benzo[a]anthracene		----------NA----------				
87	P	Chrysene		----------NA----------				
88	P	bis(2-Ethylhexyl)phthalat		----------NA----------				
89	I	Perylene-d12	40.000	40.000	0.0	71	0.00	18.31
90	P	Di-n-octylphthalate		----------NA----------				
91	P	Benzo[b]fluoranthene		----------NA----------				
92	P	Benzo[k]fluoranthene		----------NA----------				
93	P	Benzo[a]pyrene		----------NA----------				

Initial Calibration Verification

Job Number: F77897
Account: TETTNOAK Tetra Tech, Inc
Project: Holloman AFB; Alamogordo, NM

Sample: SU1052-ICV1052
Lab FileID: U021951.D

```
94 P   Indeno[1,2,3-cd]pyrene            ----------NA----------
95 P   Dibenz[a,h]anthracene             ----------NA----------
96 P   Benzo[g,h,i]perylene              ----------NA----------
---------------------------------------------------------------------------
---------------------------------------------------------------------------

   (#) = Out of Range              SPCC's out = 0  CCC's out = 0
    U021950.D  8270d.m          Tue Nov 09 06:49:17 2010
```

6.7.7

6

Initial Calibration Verification

Job Number: F77897
Account: TETTNOAK Tetra Tech, Inc
Project: Holloman AFB; Alamogordo, NM

Sample: SU1052-ICV1052
Lab FileID: U021952.D

Evaluate Continuing Calibration Report

Data File : C:\msdchem\2\DATA\110810\U021952.D Vial: 10
Acq On : 8 Nov 2010 3:47 pm Operator: nancyf
Sample : icv1052-50 Inst : MSBNA04
Misc : op34713,su1052,1000,,,1,1,water Multiplr: 1.00
MS Integration Params: RTEINT.P

Method : C:\msdchem\2\METHODS\8270d.m (RTE Integrator)
Title : SW846 8270D OR EPA 625
Last Update : Tue Nov 09 06:41:16 2010
Response via : Multiple Level Calibration

Min. RRF : 0.000 Min. Rel. Area : 50% Max. R.T. Dev 0.50min
Max. RRF Dev : 20% Max. Rel. Area : 200%

		Compound	Amount	Calc.	%Drift	Area%	Dev(min)	R.T.
1	I	1,4-Dichlorobenzene-d4	40.000	40.000	0.0	100	0.00	4.98
2		1,4-Dioxane	50.000	47.033	5.9	0	0.00	2.57
3		N-nitrosodimethylamine	50.000	46.032	7.9	0	0.00	2.90
4		Pyridine		----------NA----------				
5	P	Benzaldehyde	50.000	47.209	5.6	0	0.00	4.65
6		Aniline		----------NA----------				
7	S	2-Fluorophenol		----------NA----------				
8	P	bis(2-Chloroethyl)ether	50.000	49.228	1.5	0	0.00	4.79
9	S	Phenol-d5		----------NA----------				
10	P	Phenol	50.000	48.715	2.6	0	0.00	4.75
11	P	2-Chlorophenol	50.000	49.920	0.2	0	0.00	4.84
12		1,3-Dichlorobenzene	50.000	47.839	4.3	0	0.00	4.95
13		1,4-Dichlorobenzene	50.000	49.170	1.7	0	0.00	4.99
14		1,2-Dichlorobenzene	50.000	48.250	3.5	0	0.00	5.15
15		Benzyl alcohol		----------NA----------				
16	P	bis(2-chloroisopropyl)eth	50.000	50.238	-0.5	0	0.00	5.23
17	P	2-Methylphenol	50.000	46.756	6.5	0	0.00	5.21
18	P	Acetophenone	50.000	43.386	13.2	0	0.00	5.33
19	P	Hexachloroethane	50.000	48.003	4.0	0	0.00	5.40
20	P	N-Nitroso-di-n-propylamin	50.000	45.133	9.7	0	0.00	5.34
21	P	3&4-Methylphenol	100.000	87.470	12.5	0	0.00	5.33
22	I	Naphthalene-d8	40.000	40.000	0.0	85	0.00	6.13
23	S	Nitrobenzene-d5		----------NA----------				
24	P	Nitrobenzene	50.000	52.495	-5.0	0	0.00	5.48
25	P	Isophorone	50.000	42.963	14.1	0	0.00	5.68
26	P	2-Nitrophenol	50.000	55.395	-10.8	0	0.00	5.78
27	P	2,4-Dimethylphenol	50.000	45.851	8.3	0	0.00	5.79
28	P	bis(2-Chloroethoxy)methan	50.000	54.868	-9.7	0	0.00	5.88
29		Benzoic Acid	100.000	107.507	-7.5	0	0.00	5.93
30	P	2,4-Dichlorophenol	50.000	56.518	-13.0	0	0.00	6.00
31		1,2,4-Trichlorobenzene	50.000	50.571	-1.1	0	0.00	6.09
32	P	Naphthalene	50.000	53.880	-7.8	0	0.00	6.15
33		alpha-Terpineol		----------NA----------				
34	P	4-Chloroaniline		----------NA----------				
35		2,6-Dichlorophenol	50.000	53.693	-7.4	0	0.00	6.24
36	P	Hexachlorobutadiene	50.000	54.516	-9.0	0	0.00	6.33
37	P	Caprolactam	50.000	49.771	0.5	0	0.00	6.60
38	P	4-Chloro-3-methylphenol	50.000	54.272	-8.5	0	0.00	6.77
39	P	2-Methylnaphthalene		----------NA----------				
40		1-Methylnaphthalene	50.000	52.210	-4.4	0	0.00	7.07
41	P	1,2,4,5-Tetrachlorobenzen	50.000	50.235	-0.5	0	0.00	7.21

Initial Calibration Verification

Job Number: F77897
Account: TETTNOAK Tetra Tech, Inc
Project: Holloman AFB; Alamogordo, NM

Sample: SU1052-ICV1052
Lab FileID: U021952.D

42	I	Acenaphthene-d10	40.000	40.000	0.0	95	0.00	8.43
43	P	Hexachlorocyclopentadiene	50.000	50.233	-0.5	0	0.00	7.22
44	P	2,4,6-Trichlorophenol	50.000	48.943	2.1	0	0.00	7.34
45	P	2,4,5-Trichlorophenol	50.000	47.510	5.0	0	0.00	7.39
46	S	2-Fluorobiphenyl		----------NA----------				
47	P	1,1'-Biphenyl	50.000	44.862	10.3	0	0.00	7.56
48	P	2-Chloronaphthalene	50.000	47.145	5.7	0	0.00	7.57
49	P	2-Nitroaniline		----------NA----------				
50	P	Acenaphthylene	50.000	46.741	6.5	0	0.00	8.19
51	P	Dimethylphthalate	50.000	48.324	3.4	0	0.00	8.09
52		m-Dinitrobenzene		----------NA----------				
53	P	2,6-Dinitrotoluene	50.000	45.628	8.7	0	0.00	8.20
54	P	Acenaphthene	50.000	47.779	4.4	0	0.00	8.47
55	P	3-Nitroaniline		----------NA----------				
		----------	Amount	Calc.	%Drift		----------	
56	P	2,4-Dinitrophenol	100.000	85.107	14.9	0	0.00	8.57
		----------	Amount	Calc.	%Drift		----------	
57	P	Dibenzofuran		----------NA----------				
58	P	2,4-Dinitrotoluene	50.000	47.052	5.9	0	0.00	8.82
59	P	4-Nitrophenol	100.000	96.486	3.5	0	0.00	8.71
60	P	2,3,4,6-Tetrachlorophenol	50.000	46.529	6.9	0	0.00	9.01
61	P	Fluorene	50.000	47.118	5.8	0	0.00	9.28
62	P	4-Chlorophenyl-phenylethe	50.000	49.506	1.0	0	0.00	9.30
63	P	Diethylphthalate	50.000	48.499	3.0	0	0.00	9.23
64	P	4-Nitroaniline		----------NA----------				
65	I	Phenanthrene-d10	40.000	40.000	0.0	88	0.00	10.89
66	P	4,6-Dinitro-2-methylpheno	100.000	110.414	-10.4	0	0.00	9.48
67	P	n-Nitrosodiphenylamine	50.000	48.600	2.8	0	0.00	9.53
68		1,2-Diphenylhydrazine	50.000	45.436	9.1	0	0.00	9.56
69	S	2,4,6-Tribromophenol		----------NA----------				
70	P	4-Bromophenyl-phenylether	50.000	49.812	0.4	0	0.00	10.13
71	P	Hexachlorobenzene	50.000	48.734	2.5	0	0.00	10.37
72		Simazine		----------NA----------				
73	P	Atrazine	50.000	46.291	7.4	0	0.00	10.55
74	P	Pentachlorophenol	100.000	102.161	-2.2	0	0.00	10.70
75	P	Phenanthrene	50.000	48.634	2.7	0	0.00	10.93
76	P	Anthracene	50.000	48.807	2.4	0	0.00	11.00
77	P	Carbazole		----------NA----------				
78	P	Di-n-butylphthalate	50.000	49.045	1.9	0	0.00	12.16
79	P	Fluoranthene	50.000	49.718	0.6	0	0.00	13.11
80	I	Chrysene-d12	40.000	40.000	0.0	87	0.00	15.81
81		Benzidine		----------NA----------				
82	P	Pyrene	50.000	47.466	5.1	0	0.00	13.51
83	S	Terphenyl-d14		----------NA----------				
84	P	Butylbenzylphthalate	50.000	48.600	2.8	0	0.00	14.96
85	P	3,3'-Dichlorobenzidine		----------NA----------				
86	P	Benzo[a]anthracene	50.000	48.570	2.9	0	0.00	15.78
87	P	Chrysene	50.000	48.951	2.1	0	0.00	15.86
88	P	bis(2-Ethylhexyl)phthalat	50.000	49.033	1.9	0	0.00	16.12
89	I	Perylene-d12	40.000	40.000	0.0	84	0.00	18.33
90	P	Di-n-octylphthalate	50.000	51.150	-2.3	0	0.00	17.22
91	P	Benzo[b]fluoranthene	50.000	49.883	0.2	0	0.00	17.71
92	P	Benzo[k]fluoranthene	50.000	48.308	3.4	0	0.00	17.75
93	P	Benzo[a]pyrene	50.000	47.780	4.4	0	0.00	18.23

Initial Calibration Verification

Job Number: F77897
Account: TETTNOAK Tetra Tech, Inc
Project: Holloman AFB; Alamogordo, NM

Sample: SU1052-ICV1052
Lab FileID: U021952.D

94	P	Indeno[1,2,3-cd]pyrene	50.000	47.413	5.2	0	0.00	19.92
95	P	Dibenz[a,h]anthracene	50.000	49.264	1.5	0	0.00	19.95
96	P	Benzo[g,h,i]perylene	50.000	49.344	1.3	0	0.00	20.28

(#) = Out of Range SPCC's out = 0 CCC's out = 0
U021950.D 8270d.m Tue Nov 09 06:49:18 2010

Continuing Calibration Summary

Job Number: F77897
Account: TETTNOAK Tetra Tech, Inc
Project: Holloman AFB; Alamogordo, NM

Sample: SU1063-CC1052
Lab FileID: U022221.D

Evaluate Continuing Calibration Report

Data File : C:\msdchem\2\DATA\111510\U022221.D Vial: 2
Acq On : 15 Nov 2010 7:50 am Operator: nancyf
Sample : cc1052-50 Inst : MSBNA04
Misc : op35016,su1063,1000,,,1,1,water Multiplr: 1.00
MS Integration Params: RTEINT.P

Method : C:\msdchem\2\METHODS\8270d.m (RTE Integrator)
Title : SW846 8270D OR EPA 625
Last Update : Tue Nov 16 06:58:26 2010
Response via : Multiple Level Calibration

Min. RRF : 0.000 Min. Rel. Area : 50% Max. R.T. Dev 0.50min
Max. RRF Dev : 20% Max. Rel. Area : 200%

		Compound	AvgRF	CCRF	%Dev	Area%	Dev(min)	R.T.
1	I	1,4-Dichlorobenzene-d4	1.000	1.000	0.0	79	0.00	4.85
2		1,4-Dioxane	0.544	0.499	8.3	75	0.00	2.44
3		N-nitrosodimethylamine	0.758	0.687	9.4	73	0.00	2.78
4		Pyridine	1.456	1.318	9.5	69	0.00	2.77
5	P	Benzaldehyde	1.325	1.189	10.3	76	0.00	4.54
6		Aniline	2.461	2.119	13.9	68	0.00	4.65
7	S	2-Fluorophenol	1.387	1.315	5.2	77	0.00	3.93
8	P	bis(2-Chloroethyl)ether	1.525	1.393	8.7	74	0.00	4.68
9	S	Phenol-d5	1.775	1.647	7.2	74	0.02	4.64
10	P	Phenol	2.088	1.914	8.3	72	0.02	4.65
11	P	2-Chlorophenol	1.582	1.498	5.3	76	0.00	4.73
12		1,3-Dichlorobenzene	1.608	1.535	4.5	78	0.00	4.83
13		1,4-Dichlorobenzene	1.607	1.543	4.0	78	0.00	4.87
14		1,2-Dichlorobenzene	1.527	1.465	4.1	78	0.00	5.02
15		Benzyl alcohol	1.074	1.011	5.9	76	0.00	4.99
16	P	bis(2-chloroisopropyl)eth	2.506	2.142	14.5	68	0.00	5.10
17	P	2-Methylphenol	1.446	1.310	9.4	72	0.02	5.09
18	P	Acetophenone	2.144	2.111	1.5	80	0.00	5.20
19	P	Hexachloroethane	0.625	0.587	6.1	76	0.00	5.27
20	P	N-Nitroso-di-n-propylamin	1.139	1.022	10.3	72	0.00	5.22
21	P	3&4-Methylphenol	1.525	1.409	7.6	73	0.02	5.21
22	I	Naphthalene-d8	1.000	1.000	0.0	78	0.00	5.98
23	S	Nitrobenzene-d5	0.374	0.365	2.4	76	0.01	5.34
24	P	Nitrobenzene	0.379	0.365	3.7	75	0.00	5.35
25	P	Isophorone	0.704	0.668	5.1	73	0.00	5.54
26	P	2-Nitrophenol	0.195	0.192	1.5	76	0.00	5.64
27	P	2,4-Dimethylphenol	0.348	0.343	1.4	76	0.02	5.67
28	P	bis(2-Chloroethoxy)methan	0.402	0.387	3.7	74	0.00	5.75
29		Benzoic Acid	0.313	0.304	2.9	71	0.00	5.79
30	P	2,4-Dichlorophenol	0.279	0.281	-0.7	78	0.00	5.86
31		1,2,4-Trichlorobenzene	0.294	0.299	-1.7	79	0.00	5.94
32	P	Naphthalene	0.973	0.961	1.2	76	0.00	6.00
33		alpha-Terpineol	0.304	0.290	4.6	73	0.00	5.99
34	P	4-Chloroaniline	0.435	0.427	1.8	75	0.00	6.09
35		2,6-Dichlorophenol	0.273	0.274	-0.4	77	0.00	6.10
36	P	Hexachlorobutadiene	0.145	0.149	-2.8	81	0.00	6.19
37	P	Caprolactam	0.128	0.120	6.3	72	0.00	6.43
38	P	4-Chloro-3-methylphenol	0.303	0.299	1.3	76	0.03	6.64
39	P	2-Methylnaphthalene	0.630	0.619	1.7	76	0.00	6.77
40		1-Methylnaphthalene	0.603	0.601	0.3	76	0.00	6.91
41	P	1,2,4,5-Tetrachlorobenzen	0.263	0.270	-2.7	79	0.01	7.04

Continuing Calibration Summary

Job Number: F77897
Account: TETTNOAK Tetra Tech, Inc
Project: Holloman AFB; Alamogordo, NM

Sample: SU1063-CC1052
Lab FileID: U022221.D

42	I	Acenaphthene-d10	1.000	1.000	0.0	78	0.00	8.25
43	P	Hexachlorocyclopentadiene	0.342	0.343	-0.3	79	-0.01	7.06
44	P	2,4,6-Trichlorophenol	0.419	0.409	2.4	77	0.00	7.18
45	P	2,4,5-Trichlorophenol	0.451	0.439	2.7	78	0.00	7.23
46	S	2-Fluorobiphenyl	1.390	1.366	1.7	79	0.00	7.28
47	P	1,1'-Biphenyl	1.660	1.601	3.6	78	0.00	7.39
48	P	2-Chloronaphthalene	1.263	1.229	2.7	77	-0.01	7.41
49	P	2-Nitroaniline	0.450	0.417	7.3	74	0.00	7.62
50	P	Acenaphthylene	2.003	1.929	3.7	76	0.00	8.02
51	P	Dimethylphthalate	1.477	1.422	3.7	76	0.00	7.93
52		m-Dinitrobenzene	0.260	0.251	3.5	76	0.00	7.96
53	P	2,6-Dinitrotoluene	0.341	0.331	2.9	76	0.00	8.04
54	P	Acenaphthene	1.224	1.182	3.4	77	0.00	8.29
55	P	3-Nitroaniline	0.417	0.389	6.7	73	0.00	8.25
		----------	Amount	Calc.	%Drift		----------	
56	P	2,4-Dinitrophenol	50.000	44.654	10.7	71	0.01	8.40
		----------	AvgRF	CCRF	%Dev		----------	
57	P	Dibenzofuran	1.714	1.687	1.6	78	0.00	8.54
58	P	2,4-Dinitrotoluene	0.457	0.446	2.4	76	0.00	8.64
59	P	4-Nitrophenol	0.223	0.211	5.4	72	0.04	8.57
60	P	2,3,4,6-Tetrachlorophenol	0.346	0.351	-1.4	81	0.01	8.83
61	P	Fluorene	1.406	1.372	2.4	78	0.01	9.10
62	P	4-Chlorophenyl-phenylethe	0.615	0.613	0.3	80	0.02	9.12
63	P	Diethylphthalate	1.421	1.350	5.0	74	0.02	9.06
64	P	4-Nitroaniline	0.421	0.396	5.9	74	0.02	9.25
65	I	Phenanthrene-d10	1.000	1.000	0.0	79	0.00	10.69
66	P	4,6-Dinitro-2-methylpheno	0.150	0.148	1.3	75	-0.02	9.30
67	P	n-Nitrosodiphenylamine	0.599	0.576	3.8	77	-0.01	9.35
68		1,2-Diphenylhydrazine	0.917	0.884	3.6	82	-0.01	9.38
69	S	2,4,6-Tribromophenol	0.103	0.107	-3.9	84	-0.01	9.54
70	P	4-Bromophenyl-phenylether	0.206	0.204	1.0	79	0.00	9.94
71	P	Hexachlorobenzene	0.210	0.211	-0.5	81	0.00	10.17
72		Simazine	0.101	0.118	-16.8	92	0.00	10.30
73	P	Atrazine	0.228	0.221	3.1	78	0.00	10.37
74	P	Pentachlorophenol	0.147	0.149	-1.4	80	0.00	10.51
75	P	Phenanthrene	1.135	1.097	3.3	77	0.00	10.73
76	P	Anthracene	1.154	1.105	4.2	76	0.00	10.81
77	P	Carbazole	1.142	1.090	4.6	75	0.02	11.15
78	P	Di-n-butylphthalate	1.314	1.255	4.5	75	0.03	11.97
79	P	Fluoranthene	1.141	1.124	1.5	78	0.03	12.90
80	I	Chrysene-d12	1.000	1.000	0.0	80	0.00	15.60
81		Benzidine	0.871	0.791	9.2	74	-0.02	13.25
82	P	Pyrene	1.268	1.202	5.2	77	-0.03	13.30
83	S	Terphenyl-d14	0.720	0.705	2.1	79	-0.02	13.70
84	P	Butylbenzylphthalate	0.594	0.547	7.9	74	0.00	14.76
85	P	3,3'-Dichlorobenzidine	0.448	0.438	2.2	79	0.00	15.65
86	P	Benzo[a]anthracene	1.168	1.113	4.7	77	0.00	15.57
87	P	Chrysene	1.123	1.078	4.0	78	0.00	15.65
88	P	bis(2-Ethylhexyl)phthalat	0.785	0.720	8.3	73	0.02	15.93
89	I	Perylene-d12	1.000	1.000	0.0	82	0.00	18.11
90	P	Di-n-octylphthalate	1.349	1.194	11.5	71	0.00	17.03
91	P	Benzo[b]fluoranthene	1.146	1.067	6.9	78	-0.02	17.49
92	P	Benzo[k]fluoranthene	1.161	1.121	3.4	80	-0.02	17.54
93	P	Benzo[a]pyrene	1.130	1.099	2.7	81	0.00	18.02

Continuing Calibration Summary

Job Number: F77897
Account: TETTNOAK Tetra Tech, Inc
Project: Holloman AFB; Alamogordo, NM

Sample: SU1063-CC1052
Lab FileID: U022221.D

94	P	Indeno[1,2,3-cd]pyrene	1.125	1.005	10.7	76	0.00	19.70
95	P	Dibenz[a,h]anthracene	1.098	1.035	5.7	80	0.00	19.74
96	P	Benzo[g,h,i]perylene	1.177	1.115	5.3	81	0.00	20.06

(#) = Out of Range SPCC's out = 0 CCC's out = 0
U021946.D 8270d.m Tue Nov 16 06:59:44 2010

Initial Calibration Summary

Job Number: F77897
Account: TETTNOAK Tetra Tech, Inc
Project: Holloman AFB; Alamogordo, NM

Sample: SU1064-ICC1064
Lab FileID: U022256.D

Response Factor Report MSBNA04

Method : C:\msdchem\2\METHODS\8270d.m (RTE Integrator)
Title : SW846 8270D OR EPA 625
Last Update : Wed Nov 17 09:15:33 2010
Response via : Initial Calibration

Calibration Files
5 =U022253.D 25 =U022254.D 50 =U022255.D 75 =U022256.D
100 =U022257.D 125 =U022258.D icv =U022259.D

Compound	5	25	50	75	100	125	icv	Avg	%RSD
1) I 1,4-Dichlorobenzene-d	----------ISTD----------								
2) 1,4-Dioxane	0.557	0.488	0.500	0.521	0.502	0.536		0.517	4.98
3) N-nitrosodimethyl	0.823	0.781	0.791	0.816	0.802	0.856		0.812	3.29
4) Pyridine	1.405	1.347	1.459	1.536	1.335	1.447		1.421	5.30
5)P Benzaldehyde	1.295	1.215	1.198	1.157	1.115	0.961		1.157	9.82
6) Aniline	2.433	2.257	2.208	2.194	2.101	2.232		2.238	4.91
7)S 2-Fluorophenol	1.387	1.353	1.358	1.361	1.341	1.427		1.371	2.30
8)P bis(2-Chloroethyl	1.440	1.449	1.437	1.447	1.452	1.515		1.457	2.01
9)S Phenol-d5	1.868	1.778	1.745	1.744	1.675	1.784		1.766	3.59
10)P Phenol	2.208	2.035	1.979	1.990	1.934	2.064		2.035	4.72
11)P 2-Chlorophenol	1.581	1.493	1.535	1.562	1.542	1.638		1.559	3.13
12) 1,3-Dichlorobenze	1.666	1.540	1.552	1.568	1.540	1.629		1.582	3.33
13) 1,4-Dichlorobenze	1.666	1.605	1.583	1.584	1.566	1.653		1.609	2.54
14) 1,2-Dichlorobenze	1.607	1.503	1.505	1.526	1.495	1.554		1.532	2.78
15) Benzyl alcohol	1.015	1.014	1.040	1.067	1.066	1.124		1.054	3.91
16)P bis(2-chloroisopr	2.789	2.616	2.542	2.492	2.398	2.499		2.556	5.26
17)P 2-Methylphenol	1.430	1.376	1.375	1.396	1.386	1.442		1.401	2.03
18)P Acetophenone	2.197	2.133	2.143	2.138	2.113	2.286		2.168	2.95
19)P Hexachloroethane	0.627	0.592	0.610	0.616	0.611	0.646		0.617	2.95
20)P N-Nitroso-di-n-pr	1.106	1.102	1.079	1.084	1.097	1.135		1.100	1.82
21)P 3&4-Methylphenol	1.487	1.438	1.455	1.479	1.446	1.559		1.477	2.99
22) I Naphthalene-d8	----------ISTD----------								
23)S Nitrobenzene-d5	0.427	0.377	0.366	0.351	0.328	0.321		0.362	10.61
24)P Nitrobenzene	0.417	0.383	0.369	0.348	0.324	0.317		0.360	10.51
25)P Isophorone	0.755	0.701	0.668	0.643	0.599	0.596		0.660	9.33
26)P 2-Nitrophenol	0.199	0.191	0.186	0.183	0.171	0.168		0.183	6.61
27)P 2,4-Dimethylpheno	0.389	0.357	0.340	0.326	0.306	0.299		0.336	9.98
28)P bis(2-Chloroethox	0.460	0.406	0.387	0.368	0.345	0.334		0.383	11.95
29) Benzoic Acid	0.206	0.277	0.292	0.290	0.282	0.284		0.272	12.05
30)P 2,4-Dichloropheno	0.312	0.283	0.275	0.262	0.244	0.242		0.270	9.75
31) 1,2,4-Trichlorobe	0.344	0.307	0.291	0.277	0.256	0.250		0.288	12.18
32)P Naphthalene	1.165	1.022	0.958	0.909	0.832	0.816		0.950	13.72
33) alpha-Terpineol	0.364	0.341	0.323	0.305	0.281	0.276		0.315	10.99
34)P 4-Chloroaniline	0.491	0.449	0.428	0.404	0.374	0.370		0.419	11.09
35) 2,6-Dichloropheno	0.310	0.288	0.271	0.257	0.239	0.234		0.266	11.02
36)P Hexachlorobutadie	0.159	0.144	0.139	0.130	0.121	0.119		0.135	11.14
37)P Caprolactam	0.126	0.123	0.122	0.114	0.110	0.113		0.118	5.57
38)P 4-Chloro-3-methyl	0.308	0.301	0.297	0.287	0.267	0.269		0.288	5.89
39)P 2-Methylnaphthale	0.699	0.646	0.619	0.589	0.555	0.545		0.609	9.58
40) 1-Methylnaphthale	0.688	0.626	0.600	0.573	0.531	0.526		0.591	10.37
41)P 1,2,4,5-Tetrachlo	0.301	0.273	0.266	0.252	0.234	0.234		0.260	9.83
42) I Acenaphthene-d10	----------ISTD----------								
43)P Hexachlorocyclope	0.219	0.268	0.292	0.312	0.309	0.319		0.286	13.25
44)P 2,4,6-Trichloroph	0.406	0.401	0.397	0.409	0.404	0.417		0.406	1.71

Initial Calibration Summary

Job Number: F77897
Account: TETTNOAK Tetra Tech, Inc
Project: Holloman AFB; Alamogordo, NM

Sample: SU1064-ICC1064
Lab FileID: U022256.D

```
45)P 2,4,5-Trichloroph 0.437 0.432 0.438 0.438 0.431 0.446       0.437   1.26
46)S 2-Fluorobiphenyl  1.447 1.406 1.366 1.389 1.346 1.375       1.388   2.55
47)P 1,1'-Biphenyl     1.657 1.617 1.565 1.556 1.485 1.534       1.569   3.87
48)P 2-Chloronaphthale 1.323 1.278 1.226 1.262 1.204 1.222       1.253   3.51
49)P 2-Nitroaniline    0.415 0.419 0.435 0.445 0.441 0.459       0.436   3.78
50)P Acenaphthylene    1.994 1.982 1.959 1.987 1.933 2.008       1.977   1.36
51)P Dimethylphthalate 1.479 1.449 1.450 1.480 1.469 1.535       1.477   2.13
52)  m-Dinitrobenzene  0.213 0.243 0.255 0.261 0.267 0.281       0.254   9.22
53)P 2,6-Dinitrotoluen 0.312 0.332 0.338 0.350 0.349 0.367       0.341   5.41
54)P Acenaphthene      1.293 1.202 1.209 1.228 1.190 1.233       1.226   3.01
55)P 3-Nitroaniline    0.391 0.393 0.404 0.413 0.416 0.444       0.410   4.77
56)P 2,4-Dinitrophenol 0.074 0.142 0.175 0.201 0.221 0.244       0.176  34.87
             ---- Quadratic regr., Force(0,0) ----  Coefficient =  0.9998
               Response Ratio = 0.00000 + 0.12918 *A + 0.03676 *A^2

57)P Dibenzofuran      1.814 1.721 1.704 1.716 1.700 1.770       1.738   2.59
58)P 2,4-Dinitrotoluen 0.395 0.439 0.455 0.469 0.484 0.519       0.460   9.13
59)P 4-Nitrophenol     0.200 0.225 0.228 0.240 0.245 0.264       0.234   9.16
60)P 2,3,4,6-Tetrachlo 0.324 0.314 0.327 0.331 0.335 0.351       0.330   3.74
61)P Fluorene          1.431 1.404 1.402 1.415 1.412 1.478       1.424   2.02
62)P 4-Chlorophenyl-ph 0.640 0.623 0.615 0.629 0.611 0.639       0.626   1.93
63)P Diethylphthalate  1.347 1.386 1.418 1.432 1.437 1.521       1.423   4.09
64)P 4-Nitroaniline    0.383 0.409 0.419 0.434 0.447 0.481       0.429   7.91

65) I   Phenanthrene-d10      ----------------ISTD---------------------
66)P 4,6-Dinitro-2-met 0.078 0.133 0.148 0.163 0.164 0.172       0.143  24.37
             ---- Quadratic regr., Force(0,0) ----  Coefficient =  0.9992
               Response Ratio = 0.00000 + 0.13507 *A + 0.01196 *A^2

67)P n-Nitrosodiphenyl 0.618 0.601 0.598 0.597 0.551 0.567       0.589   4.19
68)  1,2-Diphenylhydra 0.879 0.937 0.939 0.933 0.866 0.891       0.907   3.62
69)S 2,4,6-Tribromophe 0.094 0.092 0.092 0.094 0.092 0.095       0.093   1.42
70)P 4-Bromophenyl-phe 0.192 0.192 0.194 0.197 0.183 0.193       0.192   2.39
71)P Hexachlorobenzene 0.193 0.187 0.188 0.188 0.182 0.188       0.188   1.99
72)  Simazine          0.110 0.115 0.117 0.118 0.115 0.121       0.116   3.02
73)P Atrazine          0.222 0.221 0.225 0.219 0.211 0.224       0.220   2.26
74)P Pentachlorophenol 0.106 0.129 0.136 0.140 0.141 0.148       0.133  11.10
75)P Phenanthrene      1.198 1.140 1.132 1.142 1.095 1.141       1.141   2.89
76)P Anthracene        1.170 1.145 1.155 1.154 1.118 1.177       1.153   1.79
77)P Carbazole         1.174 1.170 1.164 1.176 1.158 1.215       1.176   1.70
78)P Di-n-butylphthala 1.186 1.312 1.327 1.359 1.328 1.399       1.319   5.45
79)P Fluoranthene      1.095 1.168 1.161 1.199 1.208 1.279       1.185   5.14

80) I   Chrysene-d12          ----------------ISTD---------------------
81)  Benzidine         0.665 0.780 0.815 0.828 0.840 0.830       0.793   8.31
82)P Pyrene            1.302 1.245 1.288 1.271 1.259 1.277       1.274   1.60
83)S Terphenyl-d14     0.692 0.681 0.705 0.691 0.692 0.705       0.694   1.37
84)P Butylbenzylphthal 0.516 0.575 0.595 0.595 0.601 0.618       0.583   6.15
85)P 3,3'-Dichlorobenz 0.396 0.418 0.444 0.445 0.441 0.449       0.432   4.82
86)P Benzo[a]anthracen 1.064 1.075 1.112 1.121 1.115 1.161       1.108   3.18
87)P Chrysene          1.099 1.099 1.092 1.108 1.082 1.105       1.097   0.86
88)P bis(2-Ethylhexyl) 0.628 0.768 0.794 0.814 0.817 0.830       0.775   9.72

89) I   Perylene-d12          ----------------ISTD---------------------
90)P Di-n-octylphthala 0.816 1.184 1.243 1.365 1.470 1.526       1.267  20.23
             ---- Quadratic regr., Force(0,0) ----  Coefficient =  0.9996
               Response Ratio = 0.00000 + 1.09762 *A + 0.14022 *A^2

91)P Benzo[b]fluoranth 0.944 0.993 1.010 1.137 1.122 1.169       1.063   8.62
92)P Benzo[k]fluoranth 1.218 1.198 1.219 1.174 1.165 1.237       1.202   2.34
```

Initial Calibration Summary

Job Number: F77897
Account: TETTNOAK Tetra Tech, Inc
Project: Holloman AFB; Alamogordo, NM

Sample: SU1064-ICC1064
Lab FileID: U022256.D

```
93)P Benzo[a]pyrene    0.926 1.045 1.080 1.140 1.112 1.173       1.079   8.10
94)P Indeno[1,2,3-cd]p 0.565 0.752 0.853 0.883 0.830 0.933       0.803  16.33
            ---- Quadratic regr., Force(0,0) ----  Coefficient =  0.9951
              Response Ratio = 0.00000 + 0.75326 *A + 0.05188 *A^2

95)P Dibenz[a,h]anthra 0.706 0.898 0.941 0.953 0.897 0.952       0.891  10.59
96)P Benzo[g,h,i]peryl 0.973 1.057 1.088 1.053 0.976 1.032       1.030   4.52
---------------------------------------------------------------------------
(#) = Out of Range

          8270d.m           Wed Nov 17 09:26:53 2010
```

Initial Calibration Verification

Job Number: F77897
Account: TETTNOAK Tetra Tech, Inc
Project: Holloman AFB; Alamogordo, NM

Sample: SU1064-ICV1064
Lab FileID: U022259.D

Evaluate Continuing Calibration Report

```
Data File : C:\msdchem\2\DATA\111610\U022259.D          Vial: 8
Acq On    : 16 Nov 2010   4:21 pm                   Operator: nancyf
Sample    : icv1064-50                              Inst    : MSBNA04
Misc      : op35016,su1064,1000,,,1,1,water         Multiplr: 1.00
MS Integration Params: RTEINT.P

Method       : C:\msdchem\2\METHODS\8270d.m (RTE Integrator)
Title        : SW846 8270D OR EPA 625
Last Update  : Wed Nov 17 09:15:33 2010
Response via : Multiple Level Calibration

Min. RRF     :   0.000  Min. Rel. Area :  50%  Max. R.T. Dev  0.50min
Max. RRF Dev :  20%     Max. Rel. Area : 200%
```

		Compound	Amount	Calc.	%Drift	Area%	Dev(min)	R.T.
1	I	1,4-Dichlorobenzene-d4	40.000	40.000	0.0	92	0.00	4.81
2		1,4-Dioxane	50.000	45.590	8.8	0	0.00	2.39
3		N-nitrosodimethylamine	50.000	45.462	9.1	0	0.00	2.74
4		Pyridine	50.000	45.722	8.6	0	0.00	2.73
5	P	Benzaldehyde	50.000	49.413	1.2	0	0.00	4.50
6		Aniline	50.000	50.613	-1.2	0	0.00	4.60
7	S	2-Fluorophenol		----------NA----------				
8	P	bis(2-Chloroethyl)ether	50.000	47.540	4.9	0	0.00	4.64
9	S	Phenol-d5		----------NA----------				
10	P	Phenol	50.000	50.354	-0.7	0	0.00	4.60
11	P	2-Chlorophenol	50.000	48.659	2.7	0	0.00	4.69
12		1,3-Dichlorobenzene	50.000	47.994	4.0	0	0.00	4.78
13		1,4-Dichlorobenzene	50.000	47.644	4.7	0	0.00	4.83
14		1,2-Dichlorobenzene	50.000	48.054	3.9	0	0.00	4.98
15		Benzyl alcohol	50.000	53.529	-7.1	0	0.00	4.95
16	P	bis(2-chloroisopropyl)eth	50.000	48.762	2.5	0	0.00	5.06
17	P	2-Methylphenol	50.000	49.039	1.9	0	0.00	5.05
18	P	Acetophenone	50.000	47.177	5.6	0	0.00	5.15
19	P	Hexachloroethane	50.000	48.864	2.3	0	0.00	5.22
20	P	N-Nitroso-di-n-propylamin	50.000	46.360	7.3	0	0.00	5.17
21	P	3&4-Methylphenol	100.000	96.435	3.6	0	0.00	5.17
22	I	Naphthalene-d8	40.000	40.000	0.0	87	0.00	5.93
23	S	Nitrobenzene-d5		----------NA----------				
24	P	Nitrobenzene	50.000	49.127	1.7	0	0.00	5.30
25	P	Isophorone	50.000	40.516	19.0	0	0.00	5.50
26	P	2-Nitrophenol	50.000	51.063	-2.1	0	0.00	5.59
27	P	2,4-Dimethylphenol	50.000	44.035	11.9	0	0.00	5.62
28	P	bis(2-Chloroethoxy)methan	50.000	48.661	2.7	0	0.00	5.70
29		Benzoic Acid	100.000	110.920	-10.9	0	0.00	5.74
30	P	2,4-Dichlorophenol	50.000	51.886	-3.8	0	0.00	5.81
31		1,2,4-Trichlorobenzene	50.000	45.718	8.6	0	0.00	5.89
32	P	Naphthalene	50.000	49.465	1.1	0	0.00	5.95
33		alpha-Terpineol	50.000	50.635	-1.3	0	0.00	5.93
34	P	4-Chloroaniline	50.000	45.627	8.7	0	0.00	6.04
35		2,6-Dichlorophenol	50.000	49.571	0.9	0	0.00	6.04
36	P	Hexachlorobutadiene	50.000	50.983	-2.0	0	0.00	6.13
37	P	Caprolactam	50.000	48.691	2.6	0	0.00	6.38
38	P	4-Chloro-3-methylphenol	50.000	51.812	-3.6	0	0.00	6.58
39	P	2-Methylnaphthalene	50.000	54.762	-9.5	0	0.00	6.72
40		1-Methylnaphthalene	50.000	49.043	1.9	0	0.00	6.85
41	P	1,2,4,5-Tetrachlorobenzen	50.000	48.483	3.0	0	0.00	6.98

Initial Calibration Verification

Job Number: F77897
Account: TETTNOAK Tetra Tech, Inc
Project: Holloman AFB; Alamogordo, NM

Sample: SU1064-ICV1064
Lab FileID: U022259.D

42	I	Acenaphthene-d10	40.000	40.000	0.0	92	0.00	8.18
43	P	Hexachlorocyclopentadiene	50.000	51.372	-2.7	0	0.00	7.00
44	P	2,4,6-Trichlorophenol	50.000	49.203	1.6	0	0.00	7.12
45	P	2,4,5-Trichlorophenol	50.000	49.854	0.3	0	0.00	7.18
46	S	2-Fluorobiphenyl		----------NA----------				
47	P	1,1'-Biphenyl	50.000	46.944	6.1	0	0.00	7.34
48	P	2-Chloronaphthalene	50.000	47.537	4.9	0	0.00	7.35
49	P	2-Nitroaniline	50.000	56.125	-12.3	0	0.00	7.56
50	P	Acenaphthylene	50.000	48.159	3.7	0	0.00	7.95
51	P	Dimethylphthalate	50.000	47.827	4.3	0	0.00	7.87
52		m-Dinitrobenzene	50.000	53.166	-6.3	0	0.00	7.89
53	P	2,6-Dinitrotoluene	50.000	47.944	4.1	0	0.00	7.97
54	P	Acenaphthene	50.000	48.273	3.5	0	0.00	8.23
55	P	3-Nitroaniline	50.000	41.431	17.1	0	0.00	8.18
		----------	Amount	Calc.	%Drift		----------	
56	P	2,4-Dinitrophenol	100.000	91.887	8.1	0	0.00	8.33
		----------	Amount	Calc.	%Drift		----------	
57	P	Dibenzofuran	50.000	51.794	-3.6	0	0.00	8.48
58	P	2,4-Dinitrotoluene	50.000	48.352	3.3	0	0.00	8.58
59	P	4-Nitrophenol	100.000	98.892	1.1	0	0.00	8.50
60	P	2,3,4,6-Tetrachlorophenol	50.000	47.331	5.3	0	0.00	8.76
61	P	Fluorene	50.000	49.375	1.3	0	0.00	9.03
62	P	4-Chlorophenyl-phenylethe	50.000	48.405	3.2	0	0.00	9.05
63	P	Diethylphthalate	50.000	48.455	3.1	0	0.00	8.99
64	P	4-Nitroaniline	50.000	51.877	-3.8	0	0.00	9.18
65	I	Phenanthrene-d10	40.000	40.000	0.0	90	0.00	10.62
		----------	Amount	Calc.	%Drift		----------	
66	P	4,6-Dinitro-2-methylpheno	100.000	102.477	-2.5	0	0.00	9.23
		----------	Amount	Calc.	%Drift		----------	
67	P	n-Nitrosodiphenylamine	50.000	49.806	0.4	0	0.00	9.28
68		1,2-Diphenylhydrazine	50.000	45.337	9.3	0	0.00	9.31
69	S	2,4,6-Tribromophenol		----------NA----------				
70	P	4-Bromophenyl-phenylether	50.000	49.431	1.1	0	0.00	9.87
71	P	Hexachlorobenzene	50.000	47.747	4.5	0	0.00	10.10
72		Simazine	50.000	74.147	-48.3#	0	0.00	10.23
73	P	Atrazine	50.000	49.531	0.9	0	0.00	10.30
74	P	Pentachlorophenol	100.000	108.032	-8.0	0	0.00	10.44
75	P	Phenanthrene	50.000	49.686	0.6	0	0.00	10.66
76	P	Anthracene	50.000	50.021	-0.0	0	0.00	10.73
77	P	Carbazole	50.000	54.594	-9.2	0	0.00	11.08
78	P	Di-n-butylphthalate	50.000	48.742	2.5	0	0.00	11.90
79	P	Fluoranthene	50.000	49.197	1.6	0	0.00	12.82
80	I	Chrysene-d12	40.000	40.000	0.0	84	0.00	15.52
81		Benzidine	50.000	65.105	-30.2#	0	0.00	13.18
82	P	Pyrene	50.000	50.659	-1.3	0	-0.01	13.22
83	S	Terphenyl-d14		----------NA----------				
84	P	Butylbenzylphthalate	50.000	50.507	-1.0	0	0.00	14.69
85	P	3,3'-Dichlorobenzidine	50.000	64.919	-29.8#	0	0.00	15.57
86	P	Benzo[a]anthracene	50.000	49.721	0.6	0	0.00	15.49
87	P	Chrysene	50.000	50.319	-0.6	0	0.00	15.57
88	P	bis(2-Ethylhexyl)phthalat	50.000	51.401	-2.8	0	0.00	15.86
89	I	Perylene-d12	40.000	40.000	0.0	79	0.00	18.02

Initial Calibration Verification

Job Number: F77897
Account: TETTNOAK Tetra Tech, Inc
Project: Holloman AFB; Alamogordo, NM

Sample: SU1064-ICV1064
Lab FileID: U022259.D

			Amount	Calc.	%Drift			
90	P	Di-n-octylphthalate	50.000	53.506	-7.0	0	0.00	16.96
91	P	Benzo[b]fluoranthene	50.000	49.280	1.4	0	0.00	17.41
92	P	Benzo[k]fluoranthene	50.000	51.579	-3.2	0	-0.01	17.45
93	P	Benzo[a]pyrene	50.000	49.029	1.9	0	0.00	17.93
94	P	Indeno[1,2,3-cd]pyrene	50.000	51.399	-2.8	0	0.00	19.61
95	P	Dibenz[a,h]anthracene	50.000	52.428	-4.9	0	0.00	19.65
96	P	Benzo[g,h,i]perylene	50.000	51.725	-3.5	0	0.00	19.96

(#) = Out of Range SPCC's out = 0 CCC's out = 0
U022259.D 8270d.m Wed Nov 17 09:26:01 2010

6.7.11

6

Initial Calibration Verification

Job Number: F77897
Account: TETTNOAK Tetra Tech, Inc
Project: Holloman AFB; Alamogordo, NM

Sample: SU1064-ICV1064
Lab FileID: U022260.D

Evaluate Continuing Calibration Report

```
Data File : C:\msdchem\2\DATA\111610\U022260.D          Vial: 9
Acq On    : 16 Nov 2010   4:50 pm                   Operator: nancyf
Sample    : icv1064-50                              Inst    : MSBNA04
Misc      : op35016,su1064,1000,,,1,1,water         Multiplr: 1.00
MS Integration Params: RTEINT.P

Method       : C:\msdchem\2\METHODS\8270d.m (RTE Integrator)
Title        : SW846 8270D OR EPA 625
Last Update  : Wed Nov 17 09:15:33 2010
Response via : Multiple Level Calibration

Min. RRF     :   0.000  Min. Rel. Area :  50%  Max. R.T. Dev  0.50min
Max. RRF Dev :  20%     Max. Rel. Area : 200%
```

		Compound	Amount	Calc.	%Drift	Area%	Dev(min)	R.T.
1	I	1,4-Dichlorobenzene-d4	40.000	40.000	0.0	99	0.00	4.81
2		1,4-Dioxane		----------NA----------				
3		N-nitrosodimethylamine		----------NA----------				
4		Pyridine	50.000	45.703	8.6	0	0.00	2.73
5	P	Benzaldehyde		----------NA----------				
6		Aniline	50.000	55.480	-11.0	0	0.00	4.60
7	S	2-Fluorophenol		----------NA----------				
8	P	bis(2-Chloroethyl)ether		----------NA----------				
9	S	Phenol-d5		----------NA----------				
10	P	Phenol		----------NA----------				
11	P	2-Chlorophenol		----------NA----------				
12		1,3-Dichlorobenzene		----------NA----------				
13		1,4-Dichlorobenzene		----------NA----------				
14		1,2-Dichlorobenzene		----------NA----------				
15		Benzyl alcohol	50.000	50.293	-0.6	0	0.00	4.95
16	P	bis(2-chloroisopropyl)eth		----------NA----------				
17	P	2-Methylphenol		----------NA----------				
18	P	Acetophenone		----------NA----------				
19	P	Hexachloroethane		----------NA----------				
20	P	N-Nitroso-di-n-propylamin		----------NA----------				
21	P	3&4-Methylphenol		----------NA----------				
22	I	Naphthalene-d8	40.000	40.000	0.0	82	0.00	5.93
23	S	Nitrobenzene-d5		----------NA----------				
24	P	Nitrobenzene		----------NA----------				
25	P	Isophorone		----------NA----------				
26	P	2-Nitrophenol		----------NA----------				
27	P	2,4-Dimethylphenol		----------NA----------				
28	P	bis(2-Chloroethoxy)methan		----------NA----------				
29		Benzoic Acid		----------NA----------				
30	P	2,4-Dichlorophenol		----------NA----------				
31		1,2,4-Trichlorobenzene		----------NA----------				
32	P	Naphthalene		----------NA----------				
33		alpha-Terpineol		----------NA----------				
34	P	4-Chloroaniline	50.000	62.535	-25.1#	0	0.00	6.04
35		2,6-Dichlorophenol		----------NA----------				
36	P	Hexachlorobutadiene		----------NA----------				
37	P	Caprolactam		----------NA----------				
38	P	4-Chloro-3-methylphenol		----------NA----------				
39	P	2-Methylnaphthalene	50.000	59.971	-19.9	0	0.00	6.72
40		1-Methylnaphthalene		----------NA----------				
41	P	1,2,4,5-Tetrachlorobenzen		----------NA----------				

Initial Calibration Verification

Job Number: F77897
Account: TETTNOAK Tetra Tech, Inc
Project: Holloman AFB; Alamogordo, NM

Sample: SU1064-ICV1064
Lab FileID: U022260.D

42	I	Acenaphthene-d10	40.000	40.000	0.0	96	0.00	8.18
43	P	Hexachlorocyclopentadiene		----------NA----------				
44	P	2,4,6-Trichlorophenol		----------NA----------				
45	P	2,4,5-Trichlorophenol		----------NA----------				
46	S	2-Fluorobiphenyl		----------NA----------				
47	P	1,1'-Biphenyl		----------NA----------				
48	P	2-Chloronaphthalene		----------NA----------				
49	P	2-Nitroaniline	50.000	54.629	-9.3	0	0.00	7.56
50	P	Acenaphthylene		----------NA----------				
51	P	Dimethylphthalate		----------NA----------				
52		m-Dinitrobenzene	50.000	52.360	-4.7	0	0.00	7.89
53	P	2,6-Dinitrotoluene		----------NA----------				
54	P	Acenaphthene		----------NA----------				
55	P	3-Nitroaniline	50.000	55.616	-11.2	0	0.00	8.18
		----------	Amount	Calc.	%Drift	----------		
56	P	2,4-Dinitrophenol		----------NA----------				
		----------	Amount	Calc.	%Drift	----------		
57	P	Dibenzofuran	50.000	52.290	-4.6	0	0.00	8.48
58	P	2,4-Dinitrotoluene		----------NA----------				
59	P	4-Nitrophenol		----------NA----------				
60	P	2,3,4,6-Tetrachlorophenol		----------NA----------				
61	P	Fluorene		----------NA----------				
62	P	4-Chlorophenyl-phenylethe		----------NA----------				
63	P	Diethylphthalate		----------NA----------				
64	P	4-Nitroaniline	50.000	54.015	-8.0	0	-0.01	9.17
65	I	Phenanthrene-d10	40.000	40.000	0.0	92	0.00	10.61
		----------	Amount	Calc.	%Drift	----------		
66	P	4,6-Dinitro-2-methylpheno		----------NA----------				
		----------	Amount	Calc.	%Drift	----------		
67	P	n-Nitrosodiphenylamine		----------NA----------				
68		1,2-Diphenylhydrazine		----------NA----------				
69	S	2,4,6-Tribromophenol		----------NA----------				
70	P	4-Bromophenyl-phenylether		----------NA----------				
71	P	Hexachlorobenzene		----------NA----------				
72		Simazine		----------NA----------				
73	P	Atrazine		----------NA----------				
74	P	Pentachlorophenol		----------NA----------				
75	P	Phenanthrene		----------NA----------				
76	P	Anthracene		----------NA----------				
77	P	Carbazole	50.000	53.754	-7.5	0	0.00	11.08
78	P	Di-n-butylphthalate		----------NA----------				
79	P	Fluoranthene		----------NA----------				
80	I	Chrysene-d12	40.000	40.000	0.0	86	0.00	15.51
81		Benzidine	50.000	58.834	-17.7	0	0.00	13.18
82	P	Pyrene		----------NA----------				
83	S	Terphenyl-d14		----------NA----------				
84	P	Butylbenzylphthalate		----------NA----------				
85	P	3,3'-Dichlorobenzidine	50.000	51.518	-3.0	0	0.00	15.57
86	P	Benzo[a]anthracene		----------NA----------				
87	P	Chrysene		----------NA----------				
88	P	bis(2-Ethylhexyl)phthalat		----------NA----------				
89	I	Perylene-d12	40.000	40.000	0.0	85	0.00	18.02

Initial Calibration Verification

Job Number: F77897
Account: TETTNOAK Tetra Tech, Inc
Project: Holloman AFB; Alamogordo, NM

Sample: SU1064-ICV1064
Lab FileID: U022260.D

```
            ----------------------- Amount  Calc.    %Drift   -------------
90 P   Di-n-octylphthalate                 ----------NA----------

            ----------------------- Amount  Calc.    %Drift   -------------
91 P   Benzo[b]fluoranthene                ----------NA----------
92 P   Benzo[k]fluoranthene                ----------NA----------
93 P   Benzo[a]pyrene                      ----------NA----------

            ----------------------- Amount  Calc.    %Drift   -------------
94 P   Indeno[1,2,3-cd]pyrene              ----------NA----------

            ----------------------- Amount  Calc.    %Drift   -------------
95 P   Dibenz[a,h]anthracene               ----------NA----------
96 P   Benzo[g,h,i]perylene                ----------NA----------
-------------------------------------------------------------------------
-------------------------------------------------------------------------

   (#) = Out of Range                SPCC's out = 0  CCC's out = 0
    U022259.D  8270d.m          Wed Nov 17 09:26:02 2010
```

6.7.12

6

Continuing Calibration Summary

Job Number: F77897
Account: TETTNOAK Tetra Tech, Inc
Project: Holloman AFB; Alamogordo, NM

Sample: SU1071-CC1064
Lab FileID: U022409.D

Evaluate Continuing Calibration Report

Data File : C:\msdchem\2\DATA\112010\U022409.D Vial: 3
Acq On : 20 Nov 2010 1:47 pm Operator: nancyf
Sample : cc1064-50 Inst : MSBNA04
Misc : op34954,su1071,1000,,,1,1,water Multiplr: 1.00
MS Integration Params: RTEINT.P

Method : C:\msdchem\2\METHODS\8270d.m (RTE Integrator)
Title : SW846 8270D OR EPA 625
Last Update : Mon Nov 22 12:47:19 2010
Response via : Multiple Level Calibration

Min. RRF : 0.000 Min. Rel. Area : 50% Max. R.T. Dev 0.50min
Max. RRF Dev : 20% Max. Rel. Area : 200%

		Compound	AvgRF	CCRF	%Dev	Area%	Dev(min)	R.T.
1	I	1,4-Dichlorobenzene-d4	1.000	1.000	0.0	121	0.00	4.69
2		1,4-Dioxane	0.517	0.473	8.5	115	0.00	2.25
3		N-nitrosodimethylamine	0.812	0.754	7.1	116	0.00	2.60
4		Pyridine	1.421	1.276	10.2	106	-0.01	2.59
5	P	Benzaldehyde	1.157	1.137	1.7	115	0.00	4.38
6		Aniline	2.238	2.156	3.7	118	0.00	4.49
7	S	2-Fluorophenol	1.371	1.274	7.1	114	0.00	3.78
8	P	bis(2-Chloroethyl)ether	1.457	1.349	7.4	114	0.00	4.52
9	S	Phenol-d5	1.766	1.620	8.3	113	0.00	4.50
10	P	Phenol	2.035	1.970	3.2	121	0.02	4.50
11	P	2-Chlorophenol	1.559	1.493	4.2	118	0.00	4.57
12		1,3-Dichlorobenzene	1.582	1.502	5.1	117	0.00	4.66
13		1,4-Dichlorobenzene	1.609	1.538	4.4	118	0.00	4.70
14		1,2-Dichlorobenzene	1.532	1.464	4.4	118	0.00	4.85
15		Benzyl alcohol	1.054	1.011	4.1	118	0.00	4.82
16	P	bis(2-chloroisopropyl)eth	2.556	2.307	9.7	110	0.00	4.93
17	P	2-Methylphenol	1.401	1.339	4.4	118	0.02	4.93
18	P	Acetophenone	2.168	2.200	-1.5	125	0.00	5.03
19	P	Hexachloroethane	0.617	0.606	1.8	121	0.00	5.08
20	P	N-Nitroso-di-n-propylamin	1.100	1.051	4.5	118	0.01	5.05
21	P	3&4-Methylphenol	1.477	1.412	4.4	118	0.02	5.05
22	I	Naphthalene-d8	1.000	1.000	0.0	124	0.00	5.78
23	S	Nitrobenzene-d5	0.362	0.364	-0.6	123	0.02	5.15
24	P	Nitrobenzene	0.360	0.358	0.6	120	0.00	5.17
25	P	Isophorone	0.660	0.654	0.9	121	0.00	5.36
26	P	2-Nitrophenol	0.183	0.188	-2.7	125	0.00	5.45
27	P	2,4-Dimethylphenol	0.336	0.334	0.6	121	0.02	5.49
28	P	bis(2-Chloroethoxy)methan	0.383	0.377	1.6	120	0.00	5.56
29		Benzoic Acid	0.272	0.306	-12.5	129	0.04	5.62
30	P	2,4-Dichlorophenol	0.270	0.273	-1.1	123	0.00	5.67
31		1,2,4-Trichlorobenzene	0.288	0.291	-1.0	124	0.00	5.74
32	P	Naphthalene	0.950	0.911	4.1	118	0.00	5.80
33		alpha-Terpineol	0.315	0.298	5.4	114	0.00	5.79
34	P	4-Chloroaniline	0.419	0.410	2.1	118	0.00	5.89
35		2,6-Dichlorophenol	0.266	0.264	0.8	121	0.00	5.89
36	P	Hexachlorobutadiene	0.135	0.138	-2.2	123	0.00	5.98
37	P	Caprolactam	0.118	0.121	-2.5	123	0.01	6.23
38	P	4-Chloro-3-methylphenol	0.288	0.294	-2.1	122	0.02	6.43
39	P	2-Methylnaphthalene	0.609	0.588	3.4	117	0.00	6.55
40		1-Methylnaphthalene	0.591	0.589	0.3	121	0.00	6.68
41	P	1,2,4,5-Tetrachlorobenzen	0.260	0.257	1.2	120	0.00	6.81

Continuing Calibration Summary

Job Number: F77897
Account: TETTNOAK Tetra Tech, Inc
Project: Holloman AFB; Alamogordo, NM

Sample: SU1071-CC1064
Lab FileID: U022409.D

42	I	Acenaphthene-d10	1.000	1.000	0.0	125	0.00	7.99
43	P	Hexachlorocyclopentadiene	0.286	0.337	-17.8	144	-0.01	6.83
44	P	2,4,6-Trichlorophenol	0.406	0.398	2.0	125	0.00	6.95
45	P	2,4,5-Trichlorophenol	0.437	0.414	5.3	118	0.00	7.00
46	S	2-Fluorobiphenyl	1.388	1.344	3.2	123	0.00	7.04
47	P	1,1'-Biphenyl	1.569	1.551	1.1	124	0.00	7.15
48	P	2-Chloronaphthalene	1.253	1.198	4.4	122	0.00	7.17
49	P	2-Nitroaniline	0.436	0.428	1.8	123	0.00	7.38
50	P	Acenaphthylene	1.977	1.942	1.8	124	0.00	7.76
51	P	Dimethylphthalate	1.477	1.425	3.5	123	0.00	7.69
52		m-Dinitrobenzene	0.254	0.266	-4.7	130	0.00	7.72
53	P	2,6-Dinitrotoluene	0.341	0.336	1.5	124	0.00	7.79
54	P	Acenaphthene	1.226	1.184	3.4	122	0.00	8.04
55	P	3-Nitroaniline	0.410	0.393	4.1	122	0.00	8.00
		----------	Amount	Calc.	%Drift		----------	
56	P	2,4-Dinitrophenol	50.000	58.093	-16.2	151	0.01	8.15
		----------	AvgRF	CCRF	%Dev		----------	
57	P	Dibenzofuran	1.738	1.679	3.4	123	0.00	8.28
58	P	2,4-Dinitrotoluene	0.460	0.460	0.0	126	0.01	8.39
59	P	4-Nitrophenol	0.234	0.230	1.7	126	0.04	8.33
60	P	2,3,4,6-Tetrachlorophenol	0.330	0.307	7.0	117	0.01	8.57
61	P	Fluorene	1.424	1.388	2.5	124	0.01	8.83
62	P	4-Chlorophenyl-phenylethe	0.626	0.604	3.5	123	0.02	8.86
63	P	Diethylphthalate	1.423	1.365	4.1	120	0.03	8.81
64	P	4-Nitroaniline	0.429	0.402	6.3	120	0.03	8.99
65	I	Phenanthrene-d10	1.000	1.000	0.0	129	0.00	10.41
		----------	Amount	Calc.	%Drift		----------	
66	P	4,6-Dinitro-2-methylpheno	50.000	53.126	-6.3	140	-0.02	9.05
		----------	AvgRF	CCRF	%Dev		----------	
67	P	n-Nitrosodiphenylamine	0.589	0.563	4.4	122	-0.02	9.09
68		1,2-Diphenylhydrazine	0.907	0.885	2.4	122	-0.02	9.11
69	S	2,4,6-Tribromophenol	0.093	0.092	1.1	129	-0.02	9.28
70	P	4-Bromophenyl-phenylether	0.192	0.184	4.2	123	-0.01	9.67
71	P	Hexachlorobenzene	0.188	0.182	3.2	125	-0.01	9.89
72		Simazine	0.116	0.127	-9.5	141	0.01	10.04
73	P	Atrazine	0.220	0.224	-1.8	129	0.01	10.11
74	P	Pentachlorophenol	0.133	0.113	15.0	108	0.00	10.24
75	P	Phenanthrene	1.141	1.087	4.7	124	0.00	10.45
76	P	Anthracene	1.153	1.117	3.1	125	0.00	10.52
77	P	Carbazole	1.176	1.102	6.3	123	0.02	10.88
78	P	Di-n-butylphthalate	1.319	1.258	4.6	123	0.00	11.70
79	P	Fluoranthene	1.185	1.189	-0.3	133	0.00	12.61
80	I	Chrysene-d12	1.000	1.000	0.0	134	0.00	15.31
81		Benzidine	0.793	0.806	-1.6	133	-0.03	12.97
82	P	Pyrene	1.274	1.199	5.9	125	0.00	13.01
83	S	Terphenyl-d14	0.694	0.663	4.5	126	-0.03	13.42
84	P	Butylbenzylphthalate	0.583	0.570	2.2	128	0.00	14.48
85	P	3,3'-Dichlorobenzidine	0.432	0.422	2.3	127	0.00	15.36
86	P	Benzo[a]anthracene	1.108	1.101	0.6	133	0.00	15.27
87	P	Chrysene	1.097	1.042	5.0	128	0.00	15.35
88	P	bis(2-Ethylhexyl)phthalat	0.775	0.774	0.1	131	0.02	15.65
89	I	Perylene-d12	1.000	1.000	0.0	129	0.00	17.81

Continuing Calibration Summary

Job Number: F77897
Account: TETTNOAK Tetra Tech, Inc
Project: Holloman AFB; Alamogordo, NM

Sample: SU1071-CC1064
Lab FileID: U022409.D

			Amount	Calc.	%Drift			
90	P	Di-n-octylphthalate	50.000	55.122	-10.2	147	0.00	16.76

			AvgRF	CCRF	%Dev			
91	P	Benzo[b]fluoranthene	1.063	1.089	-2.4	139	-0.01	17.19
92	P	Benzo[k]fluoranthene	1.202	1.096	8.8	116	-0.01	17.24
93	P	Benzo[a]pyrene	1.079	1.062	1.6	127	0.00	17.71

			Amount	Calc.	%Drift			
94	P	Indeno[1,2,3-cd]pyrene	50.000	57.914	-15.8	145	0.01	19.39

			AvgRF	CCRF	%Dev			
95	P	Dibenz[a,h]anthracene	0.891	0.963	-8.1	132	0.01	19.42
96	P	Benzo[g,h,i]perylene	1.030	1.025	0.5	121	0.01	19.74

(#) = Out of Range SPCC's out = 0 CCC's out = 0
U022255.D 8270d.m Mon Nov 22 12:48:51 2010

Initial Calibration Summary

Job Number: F77897
Account: TETTNOAK Tetra Tech, Inc
Project: Holloman AFB; Alamogordo, NM

Sample: SU1072-ICC1072
Lab FileID: U022437.D

Response Factor Report MSBNA04

Method : C:\msdchem\2\METHODS\8270SK.m (RTE Integrator)
Title : SW846 8270SK OR EPA 625
Last Update : Tue Nov 30 09:10:54 2010
Response via : Initial Calibration

Calibration Files
5 =U022434.D 25 =U022435.D 50 =U022436.D 75 =U022437.D
100 =U022438.D 125 =U022439.D icv =U022440.D

Compound	5	25	50	75	100	125	icv	Avg	%RSD
1) I 1,4-Dichlorobenzene-d	----------ISTD----------								
2) Pyridine	1.009	1.297	1.398	1.300	1.337	1.349		1.282	10.80
3)S 2-Fluorophenol	1.341	1.252	1.271	1.156	1.166	1.157		1.224	6.24
4) Thiophenol	1.965	1.792	1.679	1.476	1.329	1.209		1.575	18.28
---- Quadratic regr., Force(0,0) ---- Coefficient = 0.9993									
Response Ratio = 0.00000 + 1.92861 *A + -0.23316 *A^2									
5)S Phenol-d5	1.793	1.645	1.644	1.529	1.514	1.504		1.605	6.98
6)P Phenol	2.096	1.939	1.903	1.775	1.756	1.737		1.868	7.44
7) 1,3-Dichlorobenze	1.534	1.420	1.461	1.373	1.365	1.358		1.418	4.86
8)C 1,4-Dichlorobenze	1.610	1.509	1.489	1.408	1.419	1.373		1.468	5.89
9) 1,2-Dichlorobenze	1.500	1.438	1.437	1.336	1.335	1.325		1.395	5.24
10) Indene	2.367	2.199	1.996	1.709	1.504	1.325		1.850	21.97
---- Quadratic regr., Force(0,0) ---- Coefficient = 0.9991									
Response Ratio = 0.00000 + 2.36803 *A + -0.33772 *A^2									
11) P2-Methylphenol	1.490	1.426	1.428	1.360	1.344	1.328		1.396	4.47
12)P 3&4-Methylphenol	1.618	1.523	1.479	1.416	1.391	1.377		1.467	6.27
13) I Naphthalene-d8	----------ISTD----------								
14)S Nitrobenzene-d5	0.414	0.384	0.391	0.366	0.370	0.363		0.381	5.07
15)P 2,4-Dimethylpheno	0.418	0.401	0.394	0.374	0.362	0.365		0.386	5.80
16)P Naphthalene	1.099	1.004	0.998	0.935	0.925	0.920		0.980	7.02
17) Quinoline	0.729	0.692	0.675	0.657	0.638	0.634		0.671	5.37
18) 1-Methylnaphthale	0.622	0.614	0.600	0.576	0.569	0.571		0.592	3.94
19) I Acenaphthene-d10	----------ISTD----------								
20)S 2-Fluorobiphenyl	1.348	1.277	1.286	1.216	1.223	1.206		1.260	4.34
21)P Dimethylphthalate	1.317	1.297	1.282	1.241	1.233	1.218		1.265	3.13
22)P 2,4-Dinitrophenol	0.072	0.143	0.176	0.183	0.197	0.201		0.162	30.13
---- Quadratic regr., Force(0,0) ---- Coefficient = 0.9989									
Response Ratio = 0.00000 + 0.15353 *A + 0.01580 *A^2									
23)P 4-Nitrophenol	0.220	0.212	0.219	0.220	0.221	0.215		0.218	1.71
24)P Diethylphthalate	1.286	1.253	1.224	1.216	1.206	1.161		1.225	3.47
25) I Phenanthrene-d10	----------ISTD----------								
26)S 2,4,6-Tribromophe	0.099	0.091	0.092	0.088	0.086	0.087		0.090	5.11
27)P Phenanthrene	1.054	1.029	1.014	0.963	0.959	0.952		0.995	4.29
28)P Anthracene	1.121	1.073	1.080	1.031	1.026	1.007		1.056	4.03
29)P Di-n-butylphthala	1.171	1.167	1.142	1.131	1.113	1.085		1.135	2.89
30)P Fluoranthene	1.112	1.082	1.127	1.113	1.143	1.104		1.113	1.86
31) I Chrysene-d12	----------ISTD----------								
32)P Pyrene	1.227	1.277	1.183	1.088	1.042	1.039		1.143	8.80
33)S Terphenyl-d14	0.683	0.704	0.651	0.611	0.589	0.587		0.637	7.77

Initial Calibration Summary

Job Number: F77897 **Sample:** SU1072-ICC1072
Account: TETTNOAK Tetra Tech, Inc **Lab FileID:** U022437.D
Project: Holloman AFB; Alamogordo, NM

34)P Butylbenzylphthal	0.549	0.554	0.524	0.498	0.482	0.469	0.513	6.87
35)P Benzo[a]anthracen	1.081	1.042	1.044	1.000	0.996	0.991	1.026	3.51
36)P Chrysene	1.055	1.035	1.032	0.976	0.983	0.977	1.010	3.47
37)P bis(2-Ethylhexyl)	0.765	0.760	0.714	0.683	0.664	0.643	0.705	7.17
38) Methyl Chrysene	0.733	0.702	0.740	0.696	0.699	0.703	0.712	2.69
39) I Perylene-d12	----------ISTD----------							
40)P Di-n-octylphthala	1.305	1.273	1.237	1.255	1.240	1.206	1.253	2.71
41)P Benzo[b]fluoranth	0.991	0.967	1.032	1.076	1.035	1.087	1.031	4.51
42)P Benzo[k]fluoranth	1.152	1.077	1.056	0.997	1.045	1.004	1.055	5.36
43) 7,12-Dimethylbenz	0.437	0.442	0.443	0.436	0.439	0.436	0.439	0.72
44)P Benzo[a]pyrene	1.000	0.981	1.029	0.991	0.982	0.974	0.993	2.00
45) Dibenz(a,h)acridi	0.784	0.795	0.839	0.763	0.756	0.775	0.785	3.78
46)P Dibenz[a,h]anthra	0.941	0.877	0.930	0.838	0.828	0.849	0.877	5.50

(#) = Out of Range

8270SK.m Tue Nov 30 09:22:20 2010

Initial Calibration Verification

Job Number: F77897
Account: TETTNOAK Tetra Tech, Inc
Project: Holloman AFB; Alamogordo, NM

Sample: SU1072-ICV1072
Lab FileID: U022440.D

Evaluate Continuing Calibration Report

```
Data File : C:\msdchem\2\DATA\112210\U022440.D          Vial: 8
Acq On    : 22 Nov 2010   1:00 pm                   Operator: nancyf
Sample    : icv1072-50                              Inst    : MSBNA04
Misc      : op35010,su1072,1000,,,1,1,water         Multiplr: 1.00
MS Integration Params: lscint.p

Method       : C:\msdchem\2\METHODS\8270SK.m (RTE Integrator)
Title        : SW846 8270SK OR EPA 625
Last Update  : Tue Nov 23 08:37:01 2010
Response via : Multiple Level Calibration

Min. RRF     :   0.000  Min. Rel. Area :  50%  Max. R.T. Dev  0.50min
Max. RRF Dev :  20%     Max. Rel. Area : 200%
```

		Compound	Amount	Calc.	%Drift	Area%	Dev(min)	R.T.
1	I	1,4-Dichlorobenzene-d4	40.000	40.000	0.0	0	0.00	4.68
2		Pyridine		----------NA----------				
3	S	2-Fluorophenol		----------NA----------				
		----------	Amount	Calc.	%Drift		----------	
4		Thiophenol		----------NA----------				
		----------	Amount	Calc.	%Drift		----------	
5	S	Phenol-d5		----------NA----------				
6	P	Phenol	50.000	45.033	9.9	0	0.00	4.48
7		1,3-Dichlorobenzene	50.000	49.537	0.9	0	0.00	4.65
8	C	1,4-Dichlorobenzene	50.000	48.853	2.3	0	0.00	4.69
9		1,2-Dichlorobenzene	50.000	49.017	2.0	0	0.00	4.83
		----------	Amount	Calc.	%Drift		----------	
10		Indene		----------NA----------				
		----------	Amount	Calc.	%Drift		----------	
11	P	2-Methylphenol	50.000	41.603	16.8	0	0.00	4.92
12	P	3&4-Methylphenol	100.000	83.095	16.9	0	0.00	5.03
13	I	Naphthalene-d8	40.000	40.000	0.0	0	0.00	5.76
14	S	Nitrobenzene-d5		----------NA----------				
15	P	2,4-Dimethylphenol	50.000	37.161	25.7#	0	0.00	5.47
16	P	Naphthalene	50.000	48.539	2.9	0	0.00	5.78
17		Quinoline	50.000	51.536	-3.1	0	0.01	6.14
18		1-Methylnaphthalene	50.000	49.129	1.7	0	0.00	6.66
19	I	Acenaphthene-d10	40.000	40.000	0.0	0	0.00	7.96
20	S	2-Fluorobiphenyl		----------NA----------				
21	P	Dimethylphthalate	50.000	49.647	0.7	0	0.00	7.66
		----------	Amount	Calc.	%Drift		----------	
22	P	2,4-Dinitrophenol	100.000	97.929	2.1	0	0.00	8.12
		----------	Amount	Calc.	%Drift		----------	
23	P	4-Nitrophenol	100.000	86.491	13.5	0	0.00	8.31
24	P	Diethylphthalate	50.000	49.224	1.6	0	0.00	8.78
25	I	Phenanthrene-d10	40.000	40.000	0.0	0	0.00	10.38
26	S	2,4,6-Tribromophenol		----------NA----------				
27	P	Phenanthrene	50.000	51.258	-2.5	0	0.00	10.42

Initial Calibration Verification

Job Number: F77897
Account: TETTNOAK Tetra Tech, Inc
Project: Holloman AFB; Alamogordo, NM

Sample: SU1072-ICV1072
Lab FileID: U022440.D

28	P	Anthracene	50.000	49.346	1.3	0	0.00	10.50
29	P	Di-n-butylphthalate	50.000	50.668	-1.3	0	0.00	11.68
30	P	Fluoranthene	50.000	48.465	3.1	0	0.00	12.58
31	I	Chrysene-d12	40.000	40.000	0.0	0	0.00	15.27
32	P	Pyrene	50.000	51.069	-2.1	0	0.00	12.98
33	S	Terphenyl-d14		----------NA----------				
34	P	Butylbenzylphthalate	50.000	52.271	-4.5	0	0.00	14.45
35	P	Benzo[a]anthracene	50.000	50.088	-0.2	0	0.00	15.24
36	P	Chrysene	50.000	48.757	2.5	0	0.00	15.32
37	P	bis(2-Ethylhexyl)phthalat	50.000	52.103	-4.2	0	0.00	15.63
38		Methyl Chrysene		----------NA----------				
39	I	Perylene-d12	40.000	40.000	0.0	0	0.00	17.77
40	P	Di-n-octylphthalate	50.000	55.392	-10.8	0	0.00	16.73
41	P	Benzo[b]fluoranthene	50.000	51.177	-2.4	0	0.00	17.15
42	P	Benzo[k]fluoranthene	50.000	48.899	2.2	0	0.00	17.20
43		7,12-Dimethylbenz(a)anthr		----------NA----------				
44	P	Benzo[a]pyrene	50.000	49.646	0.7	0	0.00	17.67
45		Dibenz(a,h)acridine		----------NA----------				
46	P	Dibenz[a,h]anthracene	50.000	49.408	1.2	0	0.00	19.39

(#) = Out of Range SPCC's out = 0 CCC's out = 0
U021435.D 8270SK.m Tue Nov 23 09:05:40 2010

6.7.15

6

Initial Calibration Verification

Job Number: F77897
Account: TETTNOAK Tetra Tech, Inc
Project: Holloman AFB; Alamogordo, NM

Sample: SU1072-ICV1072
Lab FileID: U022441.D

Evaluate Continuing Calibration Report

```
Data File : C:\msdchem\2\DATA\112210\U022441.D          Vial: 9
Acq On    : 22 Nov 2010   1:31 pm                   Operator: nancyf
Sample    : icv1072-50                              Inst    : MSBNA04
Misc      : op35010,su1072,1000,,,1,1,water         Multiplr: 1.00
MS Integration Params: lscint.p

Method       : C:\msdchem\2\METHODS\8270SK.m (RTE Integrator)
Title        : SW846 8270SK OR EPA 625
Last Update  : Tue Nov 23 08:37:01 2010
Response via : Multiple Level Calibration

Min. RRF     :   0.000  Min. Rel. Area :  50%  Max. R.T. Dev  0.50min
Max. RRF Dev :  20%     Max. Rel. Area : 200%
```

		Compound	Amount	Calc.	%Drift	Area%	Dev(min)	R.T.
1	I	1,4-Dichlorobenzene-d4	40.000	40.000	0.0	0	0.00	4.68
2		Pyridine		----------NA----------				
3	S	2-Fluorophenol		----------NA----------				
		----------	Amount	Calc.	%Drift		----------	
4		Thiophenol	50.000	53.614	-7.2	0	0.00	4.39
		----------	Amount	Calc.	%Drift		----------	
5	S	Phenol-d5		----------NA----------				
6	P	Phenol	50.000	46.103	7.8	0	0.00	4.48
7		1,3-Dichlorobenzene		----------NA----------				
8	C	1,4-Dichlorobenzene		----------NA----------				
9		1,2-Dichlorobenzene		----------NA----------				
		----------	Amount	Calc.	%Drift		----------	
10		Indene	50.000	60.009	-20.0#	0	0.00	4.89
		----------	Amount	Calc.	%Drift		----------	
11	P	2-Methylphenol	50.000	44.494	11.0	0	0.00	4.91
12	P	3&4-Methylphenol	100.000	86.588	13.4	0	0.00	5.03
13	I	Naphthalene-d8	40.000	40.000	0.0	0	0.00	5.76
14	S	Nitrobenzene-d5		----------NA----------				
15	P	2,4-Dimethylphenol	50.000	46.666	6.7	0	0.00	5.47
16	P	Naphthalene		----------NA----------				
17		Quinoline		----------NA----------				
18		1-Methylnaphthalene		----------NA----------				
19	I	Acenaphthene-d10	40.000	40.000	0.0	0	0.00	7.96
20	S	2-Fluorobiphenyl		----------NA----------				
21	P	Dimethylphthalate		----------NA----------				
		----------	Amount	Calc.	%Drift		----------	
22	P	2,4-Dinitrophenol	100.000	45.643	54.4#	0	0.00	8.12
		----------	Amount	Calc.	%Drift		----------	
23	P	4-Nitrophenol	100.000	43.485	56.5#	0	0.00	8.29
24	P	Diethylphthalate		----------NA----------				
25	I	Phenanthrene-d10	40.000	40.000	0.0	0	0.00	10.38
26	S	2,4,6-Tribromophenol		----------NA----------				
27	P	Phenanthrene		----------NA----------				

Initial Calibration Verification

Job Number: F77897
Account: TETTNOAK Tetra Tech, Inc
Project: Holloman AFB; Alamogordo, NM

Sample: SU1072-ICV1072
Lab FileID: U022441.D

28	P	Anthracene		----------NA----------				
29	P	Di-n-butylphthalate		----------NA----------				
30	P	Fluoranthene		----------NA----------				
31	I	Chrysene-d12	40.000	40.000	0.0	0	-0.01	15.26
32	P	Pyrene		----------NA----------				
33	S	Terphenyl-d14		----------NA----------				
34	P	Butylbenzylphthalate		----------NA----------				
35	P	Benzo[a]anthracene		----------NA----------				
36	P	Chrysene		----------NA----------				
37	P	bis(2-Ethylhexyl)phthalat		----------NA----------				
38		Methyl Chrysene		----------NA----------				
39	I	Perylene-d12	40.000	40.000	0.0	0	0.00	17.76
40	P	Di-n-octylphthalate		----------NA----------				
41	P	Benzo[b]fluoranthene		----------NA----------				
42	P	Benzo[k]fluoranthene		----------NA----------				
43		7,12-Dimethylbenz(a)anthr		----------NA----------				
44	P	Benzo[a]pyrene		----------NA----------				
45		Dibenz(a,h)acridine		----------NA----------				
46	P	Dibenz[a,h]anthracene		----------NA----------				

(#) = Out of Range SPCC's out = 0 CCC's out = 1
U021435.D 8270SK.m Tue Nov 23 09:05:41 2010

6.7.16

6

Continuing Calibration Summary

Job Number: F77897
Account: TETTNOAK Tetra Tech, Inc
Project: Holloman AFB; Alamogordo, NM

Sample: SU1075-CC1064
Lab FileID: U022529.D

Evaluate Continuing Calibration Report

Data File : C:\msdchem\2\DATA\112410a\U022529.D Vial: 3
Acq On : 24 Nov 2010 2:07 pm Operator: nancyf
Sample : cc1064-75 Inst : MSBNA04
Misc : op35108,su1075,1000,,,1,1,water Multiplr: 1.00
MS Integration Params: RTEINT.P

Method : C:\msdchem\2\METHODS\8270d.m (RTE Integrator)
Title : SW846 8270D OR EPA 625
Last Update : Sun Nov 28 10:45:00 2010
Response via : Multiple Level Calibration

Min. RRF : 0.000 Min. Rel. Area : 50% Max. R.T. Dev 0.50min
Max. RRF Dev : 20% Max. Rel. Area : 200%

		Compound	AvgRF	CCRF	%Dev	Area%	Dev(min)	R.T.
1	I	1,4-Dichlorobenzene-d4	1.000	1.000	0.0	96	0.00	4.64
2		1,4-Dioxane	0.517	0.510	1.4	94	-0.05	2.18
3		N-nitrosodimethylamine	0.812	0.761	6.3	89	-0.03	2.55
4		Pyridine	1.421	1.477	-3.9	92	-0.04	2.54
5	P	Benzaldehyde	1.157	0.936	19.1	77	0.00	4.33
6		Aniline	2.238	2.086	6.8	91	0.00	4.44
7	S	2-Fluorophenol	1.371	1.286	6.2	90	-0.02	3.73
8	P	bis(2-Chloroethyl)ether	1.457	1.358	6.8	90	0.00	4.48
9	S	Phenol-d5	1.766	1.597	9.6	88	-0.01	4.44
10	P	Phenol	2.035	1.910	6.1	92	0.01	4.45
11	P	2-Chlorophenol	1.559	1.493	4.2	91	0.00	4.52
12		1,3-Dichlorobenzene	1.582	1.500	5.2	91	0.00	4.61
13		1,4-Dichlorobenzene	1.609	1.536	4.5	93	0.00	4.65
14		1,2-Dichlorobenzene	1.532	1.466	4.3	92	0.00	4.79
15		Benzyl alcohol	1.054	1.002	4.9	90	0.00	4.77
16	P	bis(2-chloroisopropyl)eth	2.556	2.158	15.6	83	0.00	4.88
17	P	2-Methylphenol	1.401	1.315	6.1	90	0.01	4.88
18	P	Acetophenone	2.168	2.185	-0.8	98	0.00	4.98
19	P	Hexachloroethane	0.617	0.605	1.9	94	0.00	5.04
20	P	N-Nitroso-di-n-propylamin	1.100	1.018	7.5	90	0.01	5.00
21	P	3&4-Methylphenol	1.477	1.383	6.4	89	0.01	4.99
22	I	Naphthalene-d8	1.000	1.000	0.0	96	0.00	5.72
23	S	Nitrobenzene-d5	0.362	0.336	7.2	92	0.02	5.11
24	P	Nitrobenzene	0.360	0.336	6.7	93	0.00	5.12
25	P	Isophorone	0.660	0.609	7.7	91	0.00	5.31
26	P	2-Nitrophenol	0.183	0.177	3.3	93	0.00	5.39
27	P	2,4-Dimethylphenol	0.336	0.311	7.4	92	0.01	5.43
28	P	bis(2-Chloroethoxy)methan	0.383	0.347	9.4	91	0.00	5.51
29		Benzoic Acid	0.272	0.311	-14.3	103	0.04	5.57
30	P	2,4-Dichlorophenol	0.270	0.254	5.9	93	0.00	5.61
31		1,2,4-Trichlorobenzene	0.288	0.267	7.3	93	0.00	5.68
32	P	Naphthalene	0.950	0.842	11.4	89	0.00	5.74
33		alpha-Terpineol	0.315	0.274	13.0	87	0.00	5.73
34	P	4-Chloroaniline	0.419	0.378	9.8	90	0.00	5.83
35		2,6-Dichlorophenol	0.266	0.246	7.5	92	0.00	5.83
36	P	Hexachlorobutadiene	0.135	0.126	6.7	93	0.00	5.91
37	P	Caprolactam	0.118	0.117	0.8	98	0.02	6.17
38	P	4-Chloro-3-methylphenol	0.288	0.276	4.2	93	0.02	6.36
39	P	2-Methylnaphthalene	0.609	0.545	10.5	89	0.00	6.48
40		1-Methylnaphthalene	0.591	0.551	6.8	93	0.00	6.61
41	P	1,2,4,5-Tetrachlorobenzen	0.260	0.246	5.4	94	0.00	6.74

Continuing Calibration Summary

Job Number: F77897
Account: TETTNOAK Tetra Tech, Inc
Project: Holloman AFB; Alamogordo, NM

Sample: SU1075-CC1064
Lab FileID: U022529.D

42	I	Acenaphthene-d10	1.000	1.000	0.0	96	0.00	7.90
43	P	Hexachlorocyclopentadiene	0.286	0.324	-13.3	100	0.00	6.76
44	P	2,4,6-Trichlorophenol	0.406	0.397	2.2	93	0.00	6.88
45	P	2,4,5-Trichlorophenol	0.437	0.428	2.1	94	0.00	6.93
46	S	2-Fluorobiphenyl	1.388	1.317	5.1	91	0.00	6.97
47	P	1,1'-Biphenyl	1.569	1.518	3.3	94	0.00	7.08
48	P	2-Chloronaphthalene	1.253	1.175	6.2	90	-0.01	7.09
49	P	2-Nitroaniline	0.436	0.428	1.8	93	0.00	7.30
50	P	Acenaphthylene	1.977	1.947	1.5	94	0.00	7.68
51	P	Dimethylphthalate	1.477	1.385	6.2	90	0.01	7.61
52		m-Dinitrobenzene	0.254	0.267	-5.1	99	0.00	7.63
53	P	2,6-Dinitrotoluene	0.341	0.342	-0.3	94	0.00	7.71
54	P	Acenaphthene	1.226	1.172	4.4	92	0.00	7.96
55	P	3-Nitroaniline	0.410	0.402	2.0	94	0.01	7.92
		----------	Amount	Calc.	%Drift		----------	
56	P	2,4-Dinitrophenol	75.000	82.371	-9.8	108	0.02	8.07
		----------	AvgRF	CCRF	%Dev		----------	
57	P	Dibenzofuran	1.738	1.658	4.6	93	0.00	8.20
58	P	2,4-Dinitrotoluene	0.460	0.457	0.7	94	0.02	8.31
59	P	4-Nitrophenol	0.234	0.219	6.4	88	0.03	8.24
60	P	2,3,4,6-Tetrachlorophenol	0.330	0.316	4.2	92	0.02	8.49
61	P	Fluorene	1.424	1.368	3.9	93	0.02	8.74
62	P	4-Chlorophenyl-phenylethe	0.626	0.598	4.5	92	0.03	8.77
63	P	Diethylphthalate	1.423	1.308	8.1	88	0.04	8.72
64	P	4-Nitroaniline	0.429	0.413	3.7	92	0.04	8.91
65	I	Phenanthrene-d10	1.000	1.000	0.0	97	0.00	10.31
		----------	Amount	Calc.	%Drift		----------	
66	P	4,6-Dinitro-2-methylpheno	75.000	78.237	-4.3	98	-0.01	8.96
		----------	AvgRF	CCRF	%Dev		----------	
67	P	n-Nitrosodiphenylamine	0.589	0.562	4.6	91	-0.02	9.00
68		1,2-Diphenylhydrazine	0.907	0.863	4.9	89	-0.02	9.03
69	S	2,4,6-Tribromophenol	0.093	0.095	-2.2	98	-0.02	9.19
70	P	4-Bromophenyl-phenylether	0.192	0.184	4.2	90	-0.01	9.58
71	P	Hexachlorobenzene	0.188	0.185	1.6	95	0.00	9.80
72		Simazine	0.116	0.115	0.9	95	0.02	9.96
73	P	Atrazine	0.220	0.213	3.2	94	0.02	10.02
74	P	Pentachlorophenol	0.133	0.134	-0.8	92	0.00	10.14
75	P	Phenanthrene	1.141	1.080	5.3	92	0.00	10.35
76	P	Anthracene	1.153	1.103	4.3	93	0.00	10.43
77	P	Carbazole	1.176	1.110	5.6	91	0.03	10.79
78	P	Di-n-butylphthalate	1.319	1.213	8.0	86	0.03	11.61
79	P	Fluoranthene	1.185	1.167	1.5	94	0.03	12.51
80	I	Chrysene-d12	1.000	1.000	0.0	86	0.00	15.20
81		Benzidine	0.793	0.847	-6.8	88	-0.03	12.87
82	P	Pyrene	1.274	1.308	-2.7	89	-0.01	12.90
83	S	Terphenyl-d14	0.694	0.705	-1.6	88	-0.03	13.32
84	P	Butylbenzylphthalate	0.583	0.577	1.0	83	0.00	14.38
85	P	3,3'-Dichlorobenzidine	0.432	0.413	4.4	80	0.01	15.26
86	P	Benzo[a]anthracene	1.108	1.092	1.4	84	0.00	15.17
87	P	Chrysene	1.097	1.047	4.6	81	0.00	15.25
88	P	bis(2-Ethylhexyl)phthalat	0.775	0.754	2.7	80	0.04	15.56
89	I	Perylene-d12	1.000	1.000	0.0	77	0.00	17.69

Continuing Calibration Summary

Job Number: F77897
Account: TETTNOAK Tetra Tech, Inc
Project: Holloman AFB; Alamogordo, NM

Sample: SU1075-CC1064
Lab FileID: U022529.D

			Amount	Calc.	%Drift			
90	P	Di-n-octylphthalate	75.000	77.683	-3.6	80	0.02	16.67
			AvgRF	CCRF	%Dev			
91	P	Benzo[b]fluoranthene	1.063	1.076	-1.2	73	0.00	17.09
92	P	Benzo[k]fluoranthene	1.202	1.166	3.0	77	0.00	17.13
93	P	Benzo[a]pyrene	1.079	1.084	-0.5	73	0.00	17.60
			Amount	Calc.	%Drift			
94	P	Indeno[1,2,3-cd]pyrene	75.000	76.032	-1.4	75	0.03	19.27
			AvgRF	CCRF	%Dev			
95	P	Dibenz[a,h]anthracene	0.891	0.897	-0.7	73	0.03	19.32
96	P	Benzo[g,h,i]perylene	1.030	0.987	4.2	72	0.03	19.62

(#) = Out of Range SPCC's out = 0 CCC's out = 0
U022256.D 8270d.m Sun Nov 28 10:46:37 2010

6.7.17

6

Southeast ACCUTEST LABORATORIES

GC Volatiles

QC Data Summaries

Includes the following where applicable:

- Method Blank Summaries
- Blank Spike Summaries
- Matrix Spike and Duplicate Summaries
- Surrogate Recovery Summaries
- GC Surrogate Retention Time Summaries
- Initial and Continuing Calibration Summaries

Method Blank Summary

Job Number: F77897
Account: TETTNOAK Tetra Tech, Inc
Project: Holloman AFB; Alamogordo, NM

Sample	File ID	DF	Analyzed	By	Prep Date	Prep Batch	Analytical Batch
GCD4155-MB	CD100549.D	1	11/17/10	WV	n/a	n/a	GCD4155

The QC reported here applies to the following samples: **Method:** SW846 8015C

F77897-39

CAS No.	Compound	Result	RL	MDL	Units	Q
	TPH-GRO (C6-C10)	ND	0.10	0.050	mg/l	

CAS No.	Surrogate Recoveries		Limits
460-00-4	4-Bromofluorobenzene	86%	57-129%
98-08-8	aaa-Trifluorotoluene	79%	58-120%

Blank Spike Summary

Job Number: F77897
Account: TETTNOAK Tetra Tech, Inc
Project: Holloman AFB; Alamogordo, NM

Sample	File ID	DF	Analyzed	By	Prep Date	Prep Batch	Analytical Batch
GCD4155-BS	CD100548.D	1	11/17/10	WV	n/a	n/a	GCD4155

The QC reported here applies to the following samples: **Method:** SW846 8015C

F77897-39

CAS No.	Compound	Spike mg/l	BSP mg/l	BSP %	Limits
	TPH-GRO (C6-C10)	0.4	0.371	93	75-129

CAS No.	Surrogate Recoveries	BSP	Limits
460-00-4	4-Bromofluorobenzene	113%	57-129%
98-08-8	aaa-Trifluorotoluene	119%	58-120%

Matrix Spike/Matrix Spike Duplicate Summary

Job Number: F77897
Account: TETTNOAK Tetra Tech, Inc
Project: Holloman AFB; Alamogordo, NM

Sample	File ID	DF	Analyzed	By	Prep Date	Prep Batch	Analytical Batch
F77976-1MS	CD100575.D	5	11/17/10	WV	n/a	n/a	GCD4155
F77976-1MSD	CD100576.D	5	11/17/10	WV	n/a	n/a	GCD4155
F77976-1 [a]	CD100568.D	5	11/17/10	WV	n/a	n/a	GCD4155

The QC reported here applies to the following samples: **Method:** SW846 8015C

F77897-39

CAS No.	Compound	F77976-1 mg/l	Q	Spike mg/l	MS mg/l	MS %	MSD mg/l	MSD %	RPD	Limits Rec/RPD
	TPH-GRO (C6-C10)	3.74		2	6.02	114	6.29	128	4	75-129/13

CAS No.	Surrogate Recoveries	MS	MSD	F77976-1	Limits
460-00-4	4-Bromofluorobenzene	126%	124%	127%	57-129%
98-08-8	aaa-Trifluorotoluene	100% [b]	105% [b]		58-120%
98-08-8	aaa-Trifluorotoluene	132%* [c]	137%* [c]	116%	58-120%

(a) Sample was not preserved to a pH < 2; reported results are considered minimum values.
(b) Result reported from PID.
(c) Outside control limits due to matrix interference.

Volatile Surrogate Recovery Summary

Job Number: F77897
Account: TETTNOAK Tetra Tech, Inc
Project: Holloman AFB; Alamogordo, NM

Method: SW846 8015C **Matrix:** AQ

Samples and QC shown here apply to the above method

Lab Sample ID	Lab File ID	S1 [a]	S2 [a]
F77897-39	CD100550.D	93.0	82.0
F77976-1MS	CD100575.D	126.0	132.0* [b]
F77976-1MSD	CD100576.D	124.0	137.0* [b]
GCD4155-BS	CD100548.D	113.0	119.0
GCD4155-MB	CD100549.D	86.0	79.0

Surrogate Compounds	Recovery Limits
S1 = 4-Bromofluorobenzene	57-129%
S2 = aaa-Trifluorotoluene	58-120%

(a) Recovery from GC signal #2
(b) Outside control limits due to matrix interference.

GC Surrogate Retention Time Summary

Job Number: F77897
Account: TETTNOAK Tetra Tech, Inc
Project: Holloman AFB; Alamogordo, NM

Check Std:	GCD4155-CC3992	**Injection Date:**	11/17/10
Lab File ID:	CD100547.D	**Injection Time:**	10:13
Instrument ID:	GCCD	**Method:**	SW846 8015C

	S1 [a] RT	S2 [a] RT
Check Std	11.91	7.49

Lab Sample ID	Lab File ID	Date Analyzed	Time Analyzed	S1 [a] RT	S2 [a] RT
GCD4155-BS	CD100548.D	11/17/10	10:37	11.91	7.49
GCD4155-MB	CD100549.D	11/17/10	11:02	11.91	7.50
F77897-39	CD100550.D	11/17/10	11:44	11.92	7.51
ZZZZZZ	CD100551.D	11/17/10	12:30	11.92	7.50
ZZZZZZ	CD100552.D	11/17/10	12:55	11.91	7.48
ZZZZZZ	CD100553.D	11/17/10	13:19	11.91	7.49
ZZZZZZ	CD100554.D	11/17/10	13:44	11.91	7.49
ZZZZZZ	CD100556.D	11/17/10	15:00	11.91	7.50
ZZZZZZ	CD100557.D	11/17/10	15:25	11.91	7.49

Surrogate Compounds

S1 = 4-Bromofluorobenzene
S2 = aaa-Trifluorotoluene

(a) Retention time from GC signal #2

GC Surrogate Retention Time Summary

Job Number: F77897
Account: TETTNOAK Tetra Tech, Inc
Project: Holloman AFB; Alamogordo, NM

Check Std:	GCD4155-CC3992	**Injection Date:**	11/17/10
Lab File ID:	CD100570.D	**Injection Time:**	20:42
Instrument ID:	GCCD	**Method:**	SW846 8015C

	S1 [a] RT	S1 [b] RT	S2 [a] RT	S2 [b] RT
Check Std	11.91	11.91	7.49	7.49

Lab Sample ID	Lab File ID	Date Analyzed	Time Analyzed	S1 [a] RT	S1 [b] RT	S2 [a] RT	S2 [b] RT
ZZZZZZ	CD100572.D	11/17/10	21:31		11.91		7.50
F77976-1MS	CD100575.D	11/17/10	22:43		11.91	7.49	7.48
F77976-1MSD	CD100576.D	11/17/10	23:07		11.91	7.49	7.49
GCD4155-ECC3992	CD100577.D	11/17/10	23:32	11.91	11.91	7.49	7.49

Surrogate Compounds

S1 = 4-Bromofluorobenzene
S2 = aaa-Trifluorotoluene

(a) Retention time from GC signal #1
(b) Retention time from GC signal #2

Initial Calibration Summary

Job Number: F77897
Account: TETTNOAK Tetra Tech, Inc
Project: Holloman AFB; Alamogordo, NM

Sample: GCD3992-ICC3992
Lab FileID: CD095362.D

Response Factor Report VOA2

Method : C:\HPCHEM\1\METHODS\GROW-CD.M (Chemstation Integrator)
Title : EPA 8015B/TPHGRO by GC-PID/FID
Last Update : Tue Jun 22 09:01:24 2010
Response via : Initial Calibration

Calibration Files
1 =CD095360.D 2 =CD095361.D 3 =CD095362.D 4 =CD095363.D
5 =CD095364.D 6 =CD095365.D

Compound	1	2	3	4	5	6	Avg	%RSD
1) S a,a,a-TFT	1.665	1.691	1.790	1.882	2.007	1.963	1.833 E3	7.72
2) S BFB	4.724	4.823	5.281	5.635	5.975	5.785	5.371 E3	9.61
Signal #2								
4) S a,a,a-TFT #2	5.089	5.539	5.206	5.742	6.361	6.451	5.731 E4	9.99
5) S BFB #2	2.803	2.942	3.061	3.359	3.458	3.463	3.181 E4	8.92
6) H TPH-GRO (C6-C10)	5.018	4.322	4.196	4.350	4.486	4.408	4.463 E4	6.46

---- Linear regression ---- Coefficient = 0.9986
Response Ratio = -62816.61522 + 44158.76720 *A

(#) = Out of Range

GROW-CD.M Mon Jun 28 15:03:00 2010

Initial Calibration Verification

Job Number: F77897
Account: TETTNOAK Tetra Tech, Inc
Project: Holloman AFB; Alamogordo, NM

Sample: GCD3992-ICV3992
Lab FileID: CD095367.D

Evaluate Continuing Calibration Report

```
Signal #1 : C:\HPCHEM\1\DATA\060310\CD095367.D\FID1B.CH  Vial: 12
Signal #2 : C:\HPCHEM\1\DATA\060310\CD095367.D\FID2A.CH
Acq On    :  3 Jun 2010   2:52 pm                    Operator: Wilfredo
Sample    : icv3992-3                                Inst    : VOA2
Misc      : gc11035,gcd3992,,,,,                     Multiplr: 1.00
IntFile Signal #1: PID.E        IntFile Signal #2: events2.e

Method       : C:\HPCHEM\1\METHODS\GROW-CD.M (Chemstation Integrator)
Title        : EPA 8015B/TPHGRO by GC-PID/FID
Last Update  : Tue Jun 22 09:01:24 2010
Response via : Multiple Level Calibration

Min. RRF     :   0.000  Min. Rel. Area :  50%  Max. R.T. Dev  0.10min
Max. RRF Dev :  15%     Max. Rel. Area : 150%
```

	Compound	Amount	Calc.	%Drift	Area%	Dev(min)	RT Window
1 S	a,a,a-TFT	20.000	20.391	-2.0	104	-0.05	7.46- 7.66
2 S	BFB	20.000	20.818	-4.1	106	-0.04	11.88-12.08
*****	Signal #2 *****						
4 S	a,a,a-TFT #2	20.000	20.263	-1.3	112	-0.05	7.46- 7.66
5 S	BFB #2	20.000	21.080	-5.4	110	-0.04	11.88-12.08
6 H	TPH-GRO (C6-C10)	400.000	359.411	10.1	94	-0.06	4.05-13.39

(#) = Out of Range SPCC's out = 0 CCC's out = 0
CD095362.D GROW-CD.M Mon Jun 28 15:03:10 2010

7.6.2

7

Continuing Calibration Summary

Job Number: F77897
Account: TETTNOAK Tetra Tech, Inc
Project: Holloman AFB; Alamogordo, NM

Sample: GCD4155-CC3992
Lab FileID: CD100547.D

```
                    Evaluate Continuing Calibration Report

 Signal #1 : C:\HPCHEM\1\DATA\111710\CD100547.D\FID1B.CH  Vial: 3
 Signal #2 : C:\HPCHEM\1\DATA\111710\CD100547.D\FID2A.CH
 Acq On    : 17 Nov 2010  10:13 am                    Operator: Wilfredo
 Sample    : cc3992-4                                 Inst    : VOA2
 Misc      : gc11621,gcd4155,,,,,                     Multiplr: 1.00
 IntFile Signal #1: PID.E        IntFile Signal #2: events2.e

 Method       : C:\HPCHEM\1\METHODS\GROW-CD.M (Chemstation Integrator)
 Title        : EPA 8015B/TPHGRO by GC-PID/FID
 Last Update  : Thu Nov 11 08:21:51 2010
 Response via : Multiple Level Calibration

 Min. RRF     :   0.000  Min. Rel. Area :  50%  Max. R.T. Dev  0.10min
 Max. RRF Dev :  20%     Max. Rel. Area : 150%

        Compound                Amount  Calc.    %Drift Area% Dev(min)RT Window
 ---------------------------------------------------------------------------
 1 S   a,a,a-TFT               20.000  18.501      7.5   90   0.00    7.40- 7.60
 2 S   BFB                     20.000  18.957      5.2   90   0.00   11.81-12.01

*****  Signal #2   *****

 4 S   a,a,a-TFT #2            20.000  22.032    -10.2  110   0.00    7.40- 7.60
 5 S   BFB #2                  20.000  21.920     -9.6  104   0.00   11.81-12.01
 6 H   TPH-GRO (C6-C10)       600.000 581.341      3.1   98   0.00    3.98-13.44
---------------------------------------------------------------------------
---------------------------------------------------------------------------

   (#) = Out of Range              SPCC's out = 0  CCC's out = 0
    CD095363.D GROW-CD.M        Thu Nov 18 13:47:35 2010
```

7.6.3

7

Continuing Calibration Summary

Job Number: F77897
Account: TETTNOAK Tetra Tech, Inc
Project: Holloman AFB; Alamogordo, NM

Sample: GCD4155-CC3992
Lab FileID: CD100558.D

```
                    Evaluate Continuing Calibration Report

 Signal #1 : C:\HPCHEM\1\DATA\111710\CD100558.D\FID1B.CH  Vial: 14
 Signal #2 : C:\HPCHEM\1\DATA\111710\CD100558.D\FID2A.CH
 Acq On    : 17 Nov 2010   3:49 pm                    Operator: Wilfredo
 Sample    : cc3992-3                                 Inst    : VOA2
 Misc      : gc11621,gcd4155,,,,,                     Multiplr: 1.00
 IntFile Signal #1: PID.E        IntFile Signal #2: events2.e

 Method       : C:\HPCHEM\1\METHODS\GROW-CD.M (Chemstation Integrator)
 Title        : EPA 8015B/TPHGRO by GC-PID/FID
 Last Update  : Thu Nov 11 08:21:51 2010
 Response via : Multiple Level Calibration

 Min. RRF     :   0.000  Min. Rel. Area :  50%  Max. R.T. Dev  0.10min
 Max. RRF Dev :  20%     Max. Rel. Area : 150%

        Compound                Amount  Calc.    %Drift Area% Dev(min)RT Window
 ---------------------------------------------------------------------------
 1 S   a,a,a-TFT               20.000  17.723     11.4   91   0.00    7.40- 7.60
 2 S   BFB                     20.000  18.137      9.3   92   0.00   11.81-12.01

*****  Signal #2   *****

 4 S   a,a,a-TFT #2            20.000  21.828     -9.1  120   0.00    7.40- 7.60
 5 S   BFB #2                  20.000  22.160    -10.8  115   0.00   11.81-12.01
 6 H   TPH-GRO (C6-C10)       400.000 412.672     -3.2  108   0.00    3.98-13.44
---------------------------------------------------------------------------
---------------------------------------------------------------------------

   (#) = Out of Range              SPCC's out = 0  CCC's out = 0
    CD095362.D GROW-CD.M        Thu Nov 18 13:47:18 2010
```

7.6.4

7

Continuing Calibration Summary

Job Number: F77897
Account: TETTNOAK Tetra Tech, Inc
Project: Holloman AFB; Alamogordo, NM

Sample: GCD4155-CC3992
Lab FileID: CD100570.D

```
                    Evaluate Continuing Calibration Report

 Signal #1 : C:\HPCHEM\1\DATA\111710\CD100570.D\FID1B.CH  Vial: 26
 Signal #2 : C:\HPCHEM\1\DATA\111710\CD100570.D\FID2A.CH
 Acq On    : 17 Nov 2010   8:42 pm                    Operator: Wilfredo
 Sample    : cc3992-3                                 Inst    : VOA2
 Misc      : gc11621,gcd4155,,,,,                     Multiplr: 1.00
 IntFile Signal #1: PID.E        IntFile Signal #2: events2.e

 Method       : C:\HPCHEM\1\METHODS\GROW-CD.M (Chemstation Integrator)
 Title        : EPA 8015B/TPHGRO by GC-PID/FID
 Last Update  : Thu Nov 11 08:21:51 2010
 Response via : Multiple Level Calibration

 Min. RRF     :   0.000  Min. Rel. Area :  50%  Max. R.T. Dev  0.10min
 Max. RRF Dev :  20%     Max. Rel. Area : 150%

        Compound                Amount  Calc.    %Drift Area% Dev(min)RT Window
 ---------------------------------------------------------------------------
 1 S   a,a,a-TFT               20.000  17.871     10.6   91   0.00    7.40- 7.60
 2 S   BFB                     20.000  18.088      9.6   92   0.00   11.81-12.01

*****  Signal #2   *****

 4 S   a,a,a-TFT #2            20.000  20.213     -1.1  111   0.00    7.40- 7.60
 5 S   BFB #2                  20.000  20.198     -1.0  105   0.00   11.81-12.01
 6 H   TPH-GRO (C6-C10)       400.000 409.043     -2.3  107   0.00    3.98-13.44
---------------------------------------------------------------------------
---------------------------------------------------------------------------

   (#) = Out of Range              SPCC's out = 0  CCC's out = 0
    CD095362.D GROW-CD.M        Thu Nov 18 13:47:18 2010
```

7.6.5

7

Continuing Calibration Summary

Job Number: F77897
Account: TETTNOAK Tetra Tech, Inc
Project: Holloman AFB; Alamogordo, NM

Sample: GCD4155-ECC3992
Lab FileID: CD100577.D

```
                    Evaluate Continuing Calibration Report

 Signal #1 : C:\HPCHEM\1\DATA\111710\CD100577.D\FID1B.CH  Vial: 32
 Signal #2 : C:\HPCHEM\1\DATA\111710\CD100577.D\FID2A.CH
 Acq On    : 17 Nov 2010  11:32 pm                    Operator: Wilfredo
 Sample    : ecc3992-3                                Inst    : VOA2
 Misc      : gc11621,gcd4155,,,,,                     Multiplr: 1.00
 IntFile Signal #1: PID.E        IntFile Signal #2: events2.e

 Method       : C:\HPCHEM\1\METHODS\GROW-CD.M (Chemstation Integrator)
 Title        : EPA 8015B/TPHGRO by GC-PID/FID
 Last Update  : Thu Nov 11 08:21:51 2010
 Response via : Multiple Level Calibration

 Min. RRF     :   0.000  Min. Rel. Area :  50%  Max. R.T. Dev  0.10min
 Max. RRF Dev :  20%     Max. Rel. Area : 150%

        Compound                Amount  Calc.    %Drift Area% Dev(min)RT Window
 ---------------------------------------------------------------------------
 1 S   a,a,a-TFT               20.000  17.455     12.7   89   0.00    7.40- 7.60
 2 S   BFB                     20.000  17.848     10.8   91   0.00   11.81-12.01

*****  Signal #2   *****

 4 S   a,a,a-TFT #2            20.000  23.367    -16.8  129   0.00    7.40- 7.60
 5 S   BFB #2                  20.000  22.800    -14.0  118   0.00   11.81-12.01
 6 H   TPH-GRO (C6-C10)       400.000 428.387     -7.1  112   0.00    3.98-13.44
---------------------------------------------------------------------------
---------------------------------------------------------------------------

   (#) = Out of Range              SPCC's out = 0  CCC's out = 0
    CD095362.D GROW-CD.M        Thu Nov 18 13:47:18 2010
```

7.6.6

7

Southeast ACCUTEST LABORATORIES

GC Semi-volatiles

QC Data Summaries

Includes the following where applicable:

- Method Blank Summaries
- Blank Spike Summaries
- Matrix Spike and Duplicate Summaries
- Surrogate Recovery Summaries
- GC Surrogate Retention Time Summaries
- Initial and Continuing Calibration Summaries

Method Blank Summary

Job Number: F77897
Account: TETTNOAK Tetra Tech, Inc
Project: Holloman AFB; Alamogordo, NM

Sample	File ID	DF	Analyzed	By	Prep Date	Prep Batch	Analytical Batch
OP34995-MB	YY18630.D	1	11/16/10	MV	11/10/10	OP34995	GYY675

The QC reported here applies to the following samples: **Method:** SW846 8015C

F77897-1, F77897-2, F77897-3, F77897-4, F77897-5, F77897-6, F77897-7, F77897-8, F77897-9, F77897-10, F77897-11, F77897-12, F77897-13

CAS No.	Compound	Result	RL	MDL	Units	Q
	TPH (C10-C28)	ND	8.3	3.3	mg/kg	

CAS No.	Surrogate Recoveries		Limits
84-15-1	o-Terphenyl	81%	49-108%

Method Blank Summary

Job Number: F77897
Account: TETTNOAK Tetra Tech, Inc
Project: Holloman AFB; Alamogordo, NM

Sample	File ID	DF	Analyzed	By	Prep Date	Prep Batch	Analytical Batch
OP34997-MB	ZF37624.D	1	11/17/10	FEA	11/10/10	OP34997	GZF1576

The QC reported here applies to the following samples: **Method:** SW846 8015C

F77897-14, F77897-15, F77897-16, F77897-17, F77897-18, F77897-19, F77897-20, F77897-21, F77897-22, F77897-23, F77897-24, F77897-25, F77897-26, F77897-27, F77897-28, F77897-29, F77897-30, F77897-31, F77897-32, F77897-33

CAS No.	Compound	Result	RL	MDL	Units	Q
	TPH (C10-C28)	ND	8.3	3.3	mg/kg	

CAS No.	Surrogate Recoveries		Limits
84-15-1	o-Terphenyl	91%	49-108%

Method Blank Summary

Job Number: F77897
Account: TETTNOAK Tetra Tech, Inc
Project: Holloman AFB; Alamogordo, NM

Sample	File ID	DF	Analyzed	By	Prep Date	Prep Batch	Analytical Batch
OP35007-MB	ZF37652.D	1	11/18/10	FEA	11/11/10	OP35007	GZF1576

The QC reported here applies to the following samples: **Method:** SW846 8015C

F77897-39

CAS No.	Compound	Result	RL	MDL	Units	Q
	TPH (C10-C28)	ND	0.25	0.10	mg/l	

CAS No.	Surrogate Recoveries		Limits
84-15-1	o-Terphenyl	104%	42-114%

Method Blank Summary

Job Number: F77897
Account: TETTNOAK Tetra Tech, Inc
Project: Holloman AFB; Alamogordo, NM

Sample	File ID	DF	Analyzed	By	Prep Date	Prep Batch	Analytical Batch
OP35013-MB	YY18786.D	1	11/20/10	MV	11/11/10	OP35013	GYY677

The QC reported here applies to the following samples: **Method:** SW846 8015C

F77897-36, F77897-37, F77897-38

CAS No.	Compound	Result	RL	MDL	Units	Q
	TPH (C10-C28)	ND	8.3	3.3	mg/kg	

CAS No.	Surrogate Recoveries		Limits
84-15-1	o-Terphenyl	94%	49-108%

Blank Spike Summary

Job Number: F77897
Account: TETTNOAK Tetra Tech, Inc
Project: Holloman AFB; Alamogordo, NM

Sample	File ID	DF	Analyzed	By	Prep Date	Prep Batch	Analytical Batch
OP34995-BS	YY18629.D	1	11/16/10	MV	11/10/10	OP34995	GYY675

The QC reported here applies to the following samples: **Method:** SW846 8015C

F77897-1, F77897-2, F77897-3, F77897-4, F77897-5, F77897-6, F77897-7, F77897-8, F77897-9, F77897-10, F77897-11, F77897-12, F77897-13

CAS No.	Compound	Spike mg/kg	BSP mg/kg	BSP %	Limits
	TPH (C10-C28)	33.3	27.8	83	60-107

CAS No.	Surrogate Recoveries	BSP	Limits
84-15-1	o-Terphenyl	86%	49-108%

Blank Spike Summary

Job Number: F77897
Account: TETTNOAK Tetra Tech, Inc
Project: Holloman AFB; Alamogordo, NM

Sample	File ID	DF	Analyzed	By	Prep Date	Prep Batch	Analytical Batch
OP34997-BS	ZF37623.D	1	11/17/10	FEA	11/10/10	OP34997	GZF1576

The QC reported here applies to the following samples: **Method:** SW846 8015C

F77897-14, F77897-15, F77897-16, F77897-17, F77897-18, F77897-19, F77897-20, F77897-21, F77897-22, F77897-23, F77897-24, F77897-25, F77897-26, F77897-27, F77897-28, F77897-29, F77897-30, F77897-31, F77897-32, F77897-33

CAS No.	Compound	Spike mg/kg	BSP mg/kg	BSP %	Limits
	TPH (C10-C28)	33.3	33.0	99	60-107

CAS No.	Surrogate Recoveries	BSP	Limits
84-15-1	o-Terphenyl	100%	49-108%

Blank Spike Summary

Job Number: F77897
Account: TETTNOAK Tetra Tech, Inc
Project: Holloman AFB; Alamogordo, NM

Sample	File ID	DF	Analyzed	By	Prep Date	Prep Batch	Analytical Batch
OP35007-BS	ZF37653.D	1	11/18/10	FEA	11/11/10	OP35007	GZF1576

The QC reported here applies to the following samples: **Method:** SW846 8015C

F77897-39

CAS No.	Compound	Spike mg/l	BSP mg/l	BSP %	Limits
	TPH (C10-C28)	1	0.984	98	59-114

CAS No.	Surrogate Recoveries	BSP	Limits
84-15-1	o-Terphenyl	101%	42-114%

Blank Spike Summary

Job Number: F77897
Account: TETTNOAK Tetra Tech, Inc
Project: Holloman AFB; Alamogordo, NM

Sample	File ID	DF	Analyzed	By	Prep Date	Prep Batch	Analytical Batch
OP35013-BS	YY18785.D	1	11/20/10	MV	11/11/10	OP35013	GYY677

The QC reported here applies to the following samples: **Method:** SW846 8015C

F77897-36, F77897-37, F77897-38

CAS No.	Compound	Spike mg/kg	BSP mg/kg	BSP %	Limits
	TPH (C10-C28)	33.3	31.9	96	60-107

CAS No.	Surrogate Recoveries	BSP	Limits
84-15-1	o-Terphenyl	102%	49-108%

Matrix Spike/Matrix Spike Duplicate Summary

Job Number: F77897
Account: TETTNOAK Tetra Tech, Inc
Project: Holloman AFB; Alamogordo, NM

Sample	File ID	DF	Analyzed	By	Prep Date	Prep Batch	Analytical Batch
OP34995-MS	YY18642.D	1	11/16/10	MV	11/10/10	OP34995	GYY675
OP34995-MSD	YY18643.D	1	11/16/10	MV	11/10/10	OP34995	GYY675
F77897-1	YY18641.D	1	11/16/10	MV	11/10/10	OP34995	GYY675

The QC reported here applies to the following samples: **Method:** SW846 8015C

F77897-1, F77897-2, F77897-3, F77897-4, F77897-5, F77897-6, F77897-7, F77897-8, F77897-9, F77897-10, F77897-11, F77897-12, F77897-13

CAS No.	Compound	F77897-1 mg/kg	Q	Spike mg/kg	MS mg/kg	MS %	MSD mg/kg	MSD %	RPD	Limits Rec/RPD
	TPH (C10-C28)	ND		34.4	28.1	82	27.4	80	3	60-107/36

CAS No.	Surrogate Recoveries	MS	MSD	F77897-1	Limits
84-15-1	o-Terphenyl	86%	83%	76%	49-108%

Matrix Spike/Matrix Spike Duplicate Summary

Job Number: F77897
Account: TETTNOAK Tetra Tech, Inc
Project: Holloman AFB; Alamogordo, NM

Sample	File ID	DF	Analyzed	By	Prep Date	Prep Batch	Analytical Batch
OP34997-MS	ZF37638.D	1	11/17/10	FEA	11/10/10	OP34997	GZF1576
OP34997-MSD	ZF37639.D	1	11/17/10	FEA	11/10/10	OP34997	GZF1576
F77897-24	ZF37637.D	1	11/17/10	FEA	11/10/10	OP34997	GZF1576

The QC reported here applies to the following samples: **Method:** SW846 8015C

F77897-14, F77897-15, F77897-16, F77897-17, F77897-18, F77897-19, F77897-20, F77897-21, F77897-22, F77897-23, F77897-24, F77897-25, F77897-26, F77897-27, F77897-28, F77897-29, F77897-30, F77897-31, F77897-32, F77897-33

CAS No.	Compound	F77897-24 mg/kg	Q	Spike mg/kg	MS mg/kg	MS %	MSD mg/kg	MSD %	RPD	Limits Rec/RPD
	TPH (C10-C28)	ND		38.4	28.8	75	33.5	87	15	60-107/36

CAS No.	Surrogate Recoveries	MS	MSD	F77897-24	Limits
84-15-1	o-Terphenyl	78%	87%	77%	49-108%

Matrix Spike/Matrix Spike Duplicate Summary

Job Number: F77897
Account: TETTNOAK Tetra Tech, Inc
Project: Holloman AFB; Alamogordo, NM

Sample	File ID	DF	Analyzed	By	Prep Date	Prep Batch	Analytical Batch
OP35007-MS	ZF37661.D	4	11/18/10	FEA	11/11/10	OP35007	GZF1576
OP35007-MSD	ZF37662.D	4	11/18/10	FEA	11/11/10	OP35007	GZF1576
F77889-39	ZF37660.D	4	11/18/10	FEA	11/11/10	OP35007	GZF1576

The QC reported here applies to the following samples: **Method:** SW846 8015C

F77897-39

CAS No.	Compound	F77889-39 mg/l	Q	Spike mg/l	MS mg/l	MS %	MSD mg/l	MSD %	RPD	Limits Rec/RPD
	TPH (C10-C28)	2.49		1.92	4.31	95	4.72	116*	9	59-114/34

CAS No.	Surrogate Recoveries	MS	MSD	F77889-39	Limits
84-15-1	o-Terphenyl	89%	89%	90%	42-114%

8.3.3

8

Matrix Spike/Matrix Spike Duplicate Summary

Job Number: F77897
Account: TETTNOAK Tetra Tech, Inc
Project: Holloman AFB; Alamogordo, NM

Sample	File ID	DF	Analyzed	By	Prep Date	Prep Batch	Analytical Batch
OP35013-MS	YY18798.D	1	11/20/10	MV	11/11/10	OP35013	GYY677
OP35013-MSD	YY18799.D	1	11/20/10	MV	11/11/10	OP35013	GYY677
F77899-3	YY18797.D	1	11/20/10	MV	11/11/10	OP35013	GYY677

The QC reported here applies to the following samples: **Method:** SW846 8015C

F77897-36, F77897-37, F77897-38

CAS No.	Compound	F77899-3 mg/kg	Q	Spike mg/kg	MS mg/kg	MS %	MSD mg/kg	MSD %	RPD	Limits Rec/RPD
	TPH (C10-C28)	ND		39.2	30.8	79	36.8	94	18	60-107/36

CAS No.	Surrogate Recoveries	MS	MSD	F77899-3	Limits
84-15-1	o-Terphenyl	86%	103%	93%	49-108%

8.3.4

8

Semivolatile Surrogate Recovery Summary

Job Number: F77897
Account: TETTNOAK Tetra Tech, Inc
Project: Holloman AFB; Alamogordo, NM

Method: SW846 8015C **Matrix:** AQ

Samples and QC shown here apply to the above method

Lab Sample ID	Lab File ID	S1 [a]
F77897-39	ZF37674.D	95.0
OP35007-BS	ZF37653.D	101.0
OP35007-MB	ZF37652.D	104.0
OP35007-MS	ZF37661.D	89.0
OP35007-MSD	ZF37662.D	89.0

Surrogate Compounds	Recovery Limits
S1 = o-Terphenyl	42-114%

(a) Recovery from GC signal #1

Semivolatile Surrogate Recovery Summary

Job Number: F77897
Account: TETTNOAK Tetra Tech, Inc
Project: Holloman AFB; Alamogordo, NM

Method: SW846 8015C **Matrix:** SO

Samples and QC shown here apply to the above method

Lab Sample ID	Lab File ID	S1 [a]
F77897-1	YY18641.D	76.0
F77897-2	YY18638.D	75.0
F77897-3	YY18644.D	77.0
F77897-4	YY18645.D	74.0
F77897-5	YY18646.D	75.0
F77897-6	YY18647.D	80.0
F77897-7	YY18648.D	74.0
F77897-8	YY18649.D	75.0
F77897-9	YY18650.D	67.0
F77897-10	YY18691.D	76.0
F77897-11	YY18692.D	78.0
F77897-12	YY18693.D	77.0
F77897-13	YY18694.D	76.0
F77897-14	ZF37625.D	86.0
F77897-15	ZF37626.D	87.0
F77897-16	ZF37627.D	88.0
F77897-17	ZF37628.D	95.0
F77897-18	ZF37629.D	95.0
F77897-19	ZF37630.D	86.0
F77897-20	ZF37631.D	82.0
F77897-21	ZF37632.D	91.0
F77897-22	ZF37635.D	85.0
F77897-23	ZF37636.D	83.0
F77897-24	ZF37637.D	77.0
F77897-25	ZF37640.D	78.0
F77897-26	ZF37641.D	83.0
F77897-27	ZF37642.D	89.0
F77897-28	ZF37643.D	82.0
F77897-29	ZF37644.D	85.0
F77897-30	ZF37648.D	90.0
F77897-31	ZF37649.D	84.0
F77897-32	ZF37650.D	89.0
F77897-33	ZF37651.D	80.0
F77897-36	YY18787.D	89.0
F77897-37	YY18788.D	99.0
F77897-38	YY18789.D	106.0
OP34995-BS	YY18629.D	86.0
OP34995-MB	YY18630.D	81.0
OP34995-MS	YY18642.D	86.0
OP34995-MSD	YY18643.D	83.0

Semivolatile Surrogate Recovery Summary

Job Number: F77897
Account: TETTNOAK Tetra Tech, Inc
Project: Holloman AFB; Alamogordo, NM

Method: SW846 8015C **Matrix:** SO

Samples and QC shown here apply to the above method

Lab Sample ID	Lab File ID	S1 [a]
OP34997-BS	ZF37623.D	100.0
OP34997-MB	ZF37624.D	91.0
OP34997-MS	ZF37638.D	78.0
OP34997-MSD	ZF37639.D	87.0
OP35013-BS	YY18785.D	102.0
OP35013-MB	YY18786.D	94.0
OP35013-MS	YY18798.D	86.0
OP35013-MSD	YY18799.D	103.0

Surrogate Compounds	Recovery Limits
S1 = o-Terphenyl	49-108%

(a) Recovery from GC signal #1

GC Surrogate Retention Time Summary

Job Number: F77897
Account: TETTNOAK Tetra Tech, Inc
Project: Holloman AFB; Alamogordo, NM

Check Std:	GYY675-CC628	**Injection Date:**	11/16/10
Lab File ID:	YY18627.D	**Injection Time:**	08:31
Instrument ID:	GCYY	**Method:**	SW846 8015C

	S1 [a] **RT**
Check Std	5.97

Lab Sample ID	**Lab File ID**	**Date Analyzed**	**Time Analyzed**	**S1** [a] **RT**
OP34995-BS	YY18629.D	11/16/10	09:21	5.97
OP34995-MB	YY18630.D	11/16/10	09:51	5.97
ZZZZZZ	YY18632.D	11/16/10	10:41	5.96
ZZZZZZ	YY18633.D	11/16/10	11:06	5.96
ZZZZZZ	YY18635.D	11/16/10	11:56	5.96
ZZZZZZ	YY18636.D	11/16/10	12:21	5.96
ZZZZZZ	YY18637.D	11/16/10	12:46	5.96
F77897-2	YY18638.D	11/16/10	13:11	5.96

Surrogate Compounds

S1 = o-Terphenyl

(a) Retention time from GC signal #1

GC Surrogate Retention Time Summary

Job Number: F77897
Account: TETTNOAK Tetra Tech, Inc
Project: Holloman AFB; Alamogordo, NM

Check Std:	GYY675-CC628	**Injection Date:**	11/16/10
Lab File ID:	YY18639.D	**Injection Time:**	13:37
Instrument ID:	GCYY	**Method:**	SW846 8015C

	S1 [a] **RT**
Check Std	5.96

Lab Sample ID	**Lab File ID**	**Date Analyzed**	**Time Analyzed**	**S1** [a] **RT**
F77897-1	YY18641.D	11/16/10	14:27	5.96
OP34995-MS	YY18642.D	11/16/10	14:52	5.97
OP34995-MSD	YY18643.D	11/16/10	15:18	5.97
F77897-3	YY18644.D	11/16/10	15:43	5.96
F77897-4	YY18645.D	11/16/10	16:08	5.96
F77897-5	YY18646.D	11/16/10	16:33	5.96
F77897-6	YY18647.D	11/16/10	16:59	5.96
F77897-7	YY18648.D	11/16/10	17:24	5.96
F77897-8	YY18649.D	11/16/10	17:49	5.96
F77897-9	YY18650.D	11/16/10	18:15	5.96

Surrogate Compounds

S1 = o-Terphenyl

(a) Retention time from GC signal #1

GC Surrogate Retention Time Summary

Job Number: F77897
Account: TETTNOAK Tetra Tech, Inc
Project: Holloman AFB; Alamogordo, NM

Check Std:	GYY675-CC628	**Injection Date:**	11/16/10
Lab File ID:	YY18651.D	**Injection Time:**	18:40
Instrument ID:	GCYY	**Method:**	SW846 8015C

	S1 [a] **RT**
Check Std	5.96

Lab Sample ID	**Lab File ID**	**Date Analyzed**	**Time Analyzed**	**S1** [a] **RT**
GYY675-RT	YY18683.D	11/17/10	08:01	5.96

Surrogate Compounds

S1 = o-Terphenyl

(a) Retention time from GC signal #1

GC Surrogate Retention Time Summary

Job Number: F77897
Account: TETTNOAK Tetra Tech, Inc
Project: Holloman AFB; Alamogordo, NM

Check Std:	GYY675-CC628	**Injection Date:**	11/17/10
Lab File ID:	YY18687.D	**Injection Time:**	08:31
Instrument ID:	GCYY	**Method:**	SW846 8015C

	S1 [a] **RT**
Check Std	5.97

Lab Sample ID	**Lab File ID**	**Date Analyzed**	**Time Analyzed**	**S1** [a] **RT**
ZZZZZZ	YY18689.D	11/17/10	09:20	0.00
ZZZZZZ	YY18690.D	11/17/10	09:46	0.00
F77897-10	YY18691.D	11/17/10	10:11	5.96
F77897-11	YY18692.D	11/17/10	10:36	5.96
F77897-12	YY18693.D	11/17/10	11:01	5.96
F77897-13	YY18694.D	11/17/10	11:26	5.96
OP34996-BS	YY18695.D	11/17/10	11:52	5.97
OP34996-MB	YY18696.D	11/17/10	12:17	5.96
ZZZZZZ	YY18697.D	11/17/10	12:42	5.96
ZZZZZZ	YY18698.D	11/17/10	13:07	5.96

Surrogate Compounds

S1 = o-Terphenyl

(a) Retention time from GC signal #1

GC Surrogate Retention Time Summary

Job Number: F77897
Account: TETTNOAK Tetra Tech, Inc
Project: Holloman AFB; Alamogordo, NM

Check Std:	GYY677-CC628	**Injection Date:**	11/19/10
Lab File ID:	YY18771.D	**Injection Time:**	18:38
Instrument ID:	GCYY	**Method:**	SW846 8015C

	S1 [a] **RT**
Check Std	5.93

Lab Sample ID	**Lab File ID**	**Date Analyzed**	**Time Analyzed**	**S1** [a] **RT**
F78053-4	YY18773.D	11/19/10	19:28	5.93
OP35064-MS	YY18774.D	11/19/10	19:53	5.93
OP35064-MSD	YY18775.D	11/19/10	20:19	5.93
ZZZZZZ	YY18776.D	11/19/10	20:44	5.93
ZZZZZZ	YY18777.D	11/19/10	21:09	5.93
ZZZZZZ	YY18778.D	11/19/10	21:34	5.93
ZZZZZZ	YY18779.D	11/19/10	21:59	5.93
ZZZZZZ	YY18780.D	11/19/10	22:24	5.93
GYY677-RT	YY18782.D	11/19/10	23:14	5.94

Surrogate Compounds

S1 = o-Terphenyl

(a) Retention time from GC signal #1

GC Surrogate Retention Time Summary

Job Number: F77897
Account: TETTNOAK Tetra Tech, Inc
Project: Holloman AFB; Alamogordo, NM

Check Std:	GYY677-CC628	**Injection Date:**	11/19/10
Lab File ID:	YY18783.D	**Injection Time:**	23:39
Instrument ID:	GCYY	**Method:**	SW846 8015C

	S1 [a] **RT**
Check Std	5.94

Lab Sample ID	**Lab File ID**	**Date Analyzed**	**Time Analyzed**	**S1** [a] **RT**
OP35013-BS	YY18785.D	11/20/10	00:29	5.94
OP35013-MB	YY18786.D	11/20/10	00:54	5.93
F77897-36	YY18787.D	11/20/10	01:19	5.93
F77897-37	YY18788.D	11/20/10	01:44	5.93
F77897-38	YY18789.D	11/20/10	02:08	5.93
ZZZZZZ	YY18790.D	11/20/10	02:33	5.93
ZZZZZZ	YY18791.D	11/20/10	02:59	5.93
ZZZZZZ	YY18792.D	11/20/10	03:23	5.93
ZZZZZZ	YY18793.D	11/20/10	03:48	5.93
ZZZZZZ	YY18794.D	11/20/10	04:13	5.93

Surrogate Compounds

S1 = o-Terphenyl

(a) Retention time from GC signal #1

GC Surrogate Retention Time Summary

Job Number: F77897
Account: TETTNOAK Tetra Tech, Inc
Project: Holloman AFB; Alamogordo, NM

Check Std:	GYY677-CC628	**Injection Date:**	11/20/10
Lab File ID:	YY18795.D	**Injection Time:**	04:38
Instrument ID:	GCYY	**Method:**	SW846 8015C

	S1 [a] **RT**
Check Std	5.93

Lab Sample ID	**Lab File ID**	**Date Analyzed**	**Time Analyzed**	**S1** [a] **RT**
F77899-3	YY18797.D	11/20/10	05:28	5.93
OP35013-MS	YY18798.D	11/20/10	05:53	5.93
OP35013-MSD	YY18799.D	11/20/10	06:18	5.93
ZZZZZZ	YY18800.D	11/20/10	06:43	5.93
ZZZZZZ	YY18801.D	11/20/10	07:08	5.93
ZZZZZZ	YY18802.D	11/20/10	07:33	5.93
ZZZZZZ	YY18803.D	11/20/10	07:57	5.93
ZZZZZZ	YY18804.D	11/20/10	08:22	5.93
ZZZZZZ	YY18805.D	11/20/10	08:47	5.93
GYY677-RT	YY18806.D	11/20/10	09:12	5.93

Surrogate Compounds

S1 = o-Terphenyl

(a) Retention time from GC signal #1

GC Surrogate Retention Time Summary

Job Number: F77897
Account: TETTNOAK Tetra Tech, Inc
Project: Holloman AFB; Alamogordo, NM

Check Std:	GZF1576-CC1543	**Injection Date:**	11/17/10
Lab File ID:	ZF37621.D	**Injection Time:**	13:18
Instrument ID:	GCZF	**Method:**	SW846 8015C

	S1 [a] **RT**
Check Std	6.27

Lab Sample ID	**Lab File ID**	**Date Analyzed**	**Time Analyzed**	**S1** [a] **RT**
OP34997-BS	ZF37623.D	11/17/10	14:49	6.28
OP34997-MB	ZF37624.D	11/17/10	15:09	6.27
F77897-14	ZF37625.D	11/17/10	15:30	6.27
F77897-15	ZF37626.D	11/17/10	15:50	6.27
F77897-16	ZF37627.D	11/17/10	16:10	6.27
F77897-17	ZF37628.D	11/17/10	16:31	6.27
F77897-18	ZF37629.D	11/17/10	16:51	6.27
F77897-19	ZF37630.D	11/17/10	17:11	6.27
F77897-20	ZF37631.D	11/17/10	17:32	6.27
F77897-21	ZF37632.D	11/17/10	17:52	6.27

Surrogate Compounds

S1 = o-Terphenyl

(a) Retention time from GC signal #1

GC Surrogate Retention Time Summary

Job Number: F77897
Account: TETTNOAK Tetra Tech, Inc
Project: Holloman AFB; Alamogordo, NM

Check Std:	GZF1576-CC1543	**Injection Date:**	11/17/10
Lab File ID:	ZF37633.D	**Injection Time:**	18:12
Instrument ID:	GCZF	**Method:**	SW846 8015C

	S1 [a] **RT**
Check Std	6.27

Lab Sample ID	**Lab File ID**	**Date Analyzed**	**Time Analyzed**	**S1** [a] **RT**
F77897-22	ZF37635.D	11/17/10	18:53	6.27
F77897-23	ZF37636.D	11/17/10	19:13	6.27
F77897-24	ZF37637.D	11/17/10	19:33	6.27
OP34997-MS	ZF37638.D	11/17/10	19:53	6.27
OP34997-MSD	ZF37639.D	11/17/10	20:14	6.27
F77897-25	ZF37640.D	11/17/10	20:34	6.27
F77897-26	ZF37641.D	11/17/10	20:54	6.27
F77897-27	ZF37642.D	11/17/10	21:14	6.27
F77897-28	ZF37643.D	11/17/10	21:34	6.27
F77897-29	ZF37644.D	11/17/10	21:55	6.27
GZF1576-RT	ZF37645.D	11/17/10	22:15	6.27

Surrogate Compounds

S1 = o-Terphenyl

(a) Retention time from GC signal #1

GC Surrogate Retention Time Summary

Job Number: F77897
Account: TETTNOAK Tetra Tech, Inc
Project: Holloman AFB; Alamogordo, NM

Check Std:	GZF1576-CC1543	**Injection Date:**	11/17/10
Lab File ID:	ZF37646.D	**Injection Time:**	22:35
Instrument ID:	GCZF	**Method:**	SW846 8015C

	S1 [a] **RT**
Check Std	6.27

Lab Sample ID	**Lab File ID**	**Date Analyzed**	**Time Analyzed**	**S1** [a] **RT**
F77897-30	ZF37648.D	11/17/10	23:15	6.27
F77897-31	ZF37649.D	11/17/10	23:35	6.27
F77897-32	ZF37650.D	11/17/10	23:56	6.27
F77897-33	ZF37651.D	11/18/10	00:16	6.27
OP35007-MB	ZF37652.D	11/18/10	00:36	6.27
OP35007-BS	ZF37653.D	11/18/10	00:56	6.27
ZZZZZZ	ZF37654.D	11/18/10	01:16	6.27
ZZZZZZ	ZF37655.D	11/18/10	01:36	6.26
ZZZZZZ	ZF37656.D	11/18/10	01:56	6.27
ZZZZZZ	ZF37657.D	11/18/10	02:16	6.26

Surrogate Compounds

S1 = o-Terphenyl

(a) Retention time from GC signal #1

GC Surrogate Retention Time Summary

Job Number: F77897
Account: TETTNOAK Tetra Tech, Inc
Project: Holloman AFB; Alamogordo, NM

Check Std:	GZF1576-CC1543	**Injection Date:**	11/18/10
Lab File ID:	ZF37658.D	**Injection Time:**	02:37
Instrument ID:	GCZF	**Method:**	SW846 8015C

	S1 [a] **RT**
Check Std	6.27

Lab Sample ID	**Lab File ID**	**Date Analyzed**	**Time Analyzed**	**S1** [a] **RT**
F77889-39	ZF37660.D	11/18/10	03:17	6.26
OP35007-MS	ZF37661.D	11/18/10	03:37	6.27
OP35007-MSD	ZF37662.D	11/18/10	03:57	6.27
ZZZZZZ	ZF37663.D	11/18/10	04:17	6.27
ZZZZZZ	ZF37664.D	11/18/10	04:37	6.26
ZZZZZZ	ZF37665.D	11/18/10	04:57	6.26
ZZZZZZ	ZF37666.D	11/18/10	05:17	6.27
ZZZZZZ	ZF37667.D	11/18/10	05:37	6.27
ZZZZZZ	ZF37668.D	11/18/10	05:57	6.27
ZZZZZZ	ZF37669.D	11/18/10	06:17	6.26
GZF1576-RT	ZF37670.D	11/18/10	06:38	6.27

Surrogate Compounds

S1 = o-Terphenyl

(a) Retention time from GC signal #1

GC Surrogate Retention Time Summary

Job Number: F77897
Account: TETTNOAK Tetra Tech, Inc
Project: Holloman AFB; Alamogordo, NM

Check Std:	GZF1576-CC1543	**Injection Date:**	11/18/10
Lab File ID:	ZF37671.D	**Injection Time:**	06:58
Instrument ID:	GCZF	**Method:**	SW846 8015C

	S1 [a] **RT**
Check Std	6.27

Lab Sample ID	**Lab File ID**	**Date Analyzed**	**Time Analyzed**	**S1** [a] **RT**
ZZZZZZ	ZF37673.D	11/18/10	07:38	6.27
F77897-39	ZF37674.D	11/18/10	07:58	6.27
ZZZZZZ	ZF37675.D	11/18/10	08:18	6.27
ZZZZZZ	ZF37676.D	11/18/10	08:38	6.27
ZZZZZZ	ZF37677.D	11/18/10	08:58	6.27
ZZZZZZ	ZF37678.D	11/18/10	09:18	6.27
ZZZZZZ	ZF37679.D	11/18/10	09:40	6.27
ZZZZZZ	ZF37680.D	11/18/10	10:01	6.27

Surrogate Compounds

S1 = o-Terphenyl

(a) Retention time from GC signal #1

Initial Calibration Summary

Job Number: F77897
Account: TETTNOAK Tetra Tech, Inc
Project: Holloman AFB; Alamogordo, NM

Sample: GYY628-ICC628
Lab FileID: YY17278.D

Response Factor Report FID 5

Method : C:\MSDCHEM\2\METHODS\F_DRO.M (Chemstation Integrator)
Title : TPH by SW846 8015B
Last Update : Wed Sep 01 08:29:19 2010
Response via : Initial Calibration

Calibration Files
200 =YY17276.D 500 =YY17277.D 1000=YY17278.D 2000=YY17279.D
3000 =YY17280.D 4000 =YY17281.D

Compound	200	500	1000	2000	3000	4000	Avg	%RSD
1) S O-TERPHENYL	9.794	8.728	9.355	9.046	8.982	9.800	9.284 E4	4.79
2) H TPH (C10-C28)	8.621	8.578	8.981	8.438	8.381	8.956	8.659 E4	2.95

(#) = Out of Range

F_DRO.M Thu Sep 02 10:27:33 2010

8.6.1

8

Initial Calibration Verification

Job Number: F77897
Account: TETTNOAK Tetra Tech, Inc
Project: Holloman AFB; Alamogordo, NM

Sample: GYY628-ICV628
Lab FileID: YY17282.D

Evaluate Continuing Calibration Report

```
Data File : C:\MSDCHEM\2\DATA\0831DRO\YY17282.D          Vial: 8
Acq On    : 31 Aug 2010  12:16 pm                    Operator: neilc1
Sample    : icv628-1000                              Inst    : FID 5
Misc      : OP34131,gyy628,1000,,,1,1,water          Multiplr: 1.00
IntFile   : events.e

Method       : C:\MSDCHEM\2\METHODS\F_DRO.M (Chemstation Integrator)
Title        : TPH by SW846 8015B
Last Update  : Wed Sep 01 08:29:19 2010
Response via : Multiple Level Calibration

Min. RRF     :   0.000  Min. Rel. Area :  50%  Max. R.T. Dev  0.50min
Max. RRF Dev :  15%     Max. Rel. Area : 150%
```

	Compound	Amount	Calc.	%Drift	Area%	Dev(min)	RT Window
1 S	O-TERPHENYL	----------	NA	----------			
2 H	TPH (C10-C28)	1000.000	961.844	3.8	93	0.00	3.03- 8.36

(#) = Out of Range SPCC's out = 0 CCC's out = 0
YY17278.D F_DRO.M Thu Sep 02 10:26:52 2010

Continuing Calibration Summary

Job Number: F77897
Account: TETTNOAK Tetra Tech, Inc
Project: Holloman AFB; Alamogordo, NM

Sample: GYY675-CC628
Lab FileID: YY18627.D

Evaluate Continuing Calibration Report

```
Data File : C:\MSDCHEM\2\DATA\1116DRO\YY18627.D          Vial: 2
Acq On    : 11-16-10 08:31:14 AM                     Operator: marthav
Sample    : cc628-1000                               Inst    : FID 5
Misc      : op34995,gyy675,30.0,,,1,1,soil           Multiplr: 1.00
IntFile   : events.e

Method       : C:\MSDCHEM\2\METHODS\F_DRO.M (Chemstation Integrator)
Title        : TPH by SW846 8015C
Last Update  : Thu Nov 18 09:44:52 2010
Response via : Multiple Level Calibration

Min. RRF     :   0.000  Min. Rel. Area :  50%  Max. R.T. Dev  0.50min
Max. RRF Dev :  20%     Max. Rel. Area : 150%
```

	Compound	Amount	Calc.	%Drift	Area%	Dev(min)	RT Window
1 S	O-TERPHENYL	25.000	24.154	3.4	96	0.00	5.92- 6.08
2 H	TPH (C10-C28)	1000.000	981.101	1.9	95	0.00	2.95- 8.36

(#) = Out of Range SPCC's out = 0 CCC's out = 0
YY17278.D F_DRO.M Thu Nov 18 13:29:09 2010

8.6.3

8

Continuing Calibration Summary

Job Number: F77897
Account: TETTNOAK Tetra Tech, Inc
Project: Holloman AFB; Alamogordo, NM

Sample: GYY675-CC628
Lab FileID: YY18639.D

```
                    Evaluate Continuing Calibration Report

 Data File : C:\MSDCHEM\2\DATA\1116DRO\YY18639.D          Vial: 14
 Acq On    : 11-16-10 01:37:07 PM                     Operator: marthav
 Sample    : cc628-1000                               Inst    : FID 5
 Misc      : op34995,gyy675,30.1,,,1,1,soil           Multiplr: 1.00
 IntFile   : events.e

 Method       : C:\MSDCHEM\2\METHODS\F_DRO.M (Chemstation Integrator)
 Title        : TPH by SW846 8015C
 Last Update  : Thu Nov 18 09:44:52 2010
 Response via : Multiple Level Calibration

 Min. RRF     :   0.000  Min. Rel. Area :  50%  Max. R.T. Dev  0.50min
 Max. RRF Dev :  20%     Max. Rel. Area : 150%

        Compound                Amount  Calc.    %Drift Area% Dev(min)RT Window
 ---------------------------------------------------------------------------
 1 S   O-TERPHENYL             25.000  23.245      7.0   92   0.00    5.92- 6.08
 2 H   TPH (C10-C28)          1000.000 959.260      4.1   92   0.00    2.95- 8.36
---------------------------------------------------------------------------
---------------------------------------------------------------------------

   (#) = Out of Range               SPCC's out = 0  CCC's out = 0
    YY17278.D  F_DRO.M          Thu Nov 18 11:53:04 2010
```

8.6.4

8

Continuing Calibration Summary

Job Number: F77897
Account: TETTNOAK Tetra Tech, Inc
Project: Holloman AFB; Alamogordo, NM

Sample: GYY675-CC628
Lab FileID: YY18651.D

Evaluate Continuing Calibration Report

```
Data File : C:\MSDCHEM\2\DATA\1116DRO\YY18651.D          Vial: 26
Acq On    : 11-16-10 06:40:15 PM                     Operator: marthav
Sample    : cc628-1000                               Inst    : FID 5
Misc      : op34995,gyy675,29.9,,,1,1,soil           Multiplr: 1.00
IntFile   : events.e

Method       : C:\MSDCHEM\2\METHODS\F_DRO.M (Chemstation Integrator)
Title        : TPH by SW846 8015C
Last Update  : Thu Nov 18 09:44:52 2010
Response via : Multiple Level Calibration

Min. RRF     :   0.000  Min. Rel. Area :  50%  Max. R.T. Dev  0.50min
Max. RRF Dev :  20%     Max. Rel. Area : 150%
```

	Compound	Amount	Calc.	%Drift	Area%	Dev(min)	RT Window
1 S	O-TERPHENYL	25.000	23.056	7.8	92	0.00	5.92- 6.08
2 H	TPH (C10-C28)	1000.000	950.127	5.0	92	0.00	2.95- 8.36

(#) = Out of Range SPCC's out = 0 CCC's out = 0
YY17278.D F_DRO.M Thu Nov 18 11:53:05 2010

8.6.5

8

Continuing Calibration Summary

Job Number: F77897
Account: TETTNOAK Tetra Tech, Inc
Project: Holloman AFB; Alamogordo, NM

Sample: GYY675-CC628
Lab FileID: YY18687.D

Evaluate Continuing Calibration Report

```
Data File : C:\MSDCHEM\2\DATA\1116DRO\YY18687.D          Vial: 58
Acq On    : 11-17-10 08:31:04 AM                     Operator: marthav
Sample    : cc628-2000                               Inst    : FID 5
Misc      : op34995,gyy675,30.0,,,1,1,soil           Multiplr: 1.00
IntFile   : events.e

Method       : C:\MSDCHEM\2\METHODS\F_DRO.M (Chemstation Integrator)
Title        : TPH by SW846 8015C
Last Update  : Thu Nov 18 09:44:52 2010
Response via : Multiple Level Calibration

Min. RRF     :   0.000  Min. Rel. Area :  50%  Max. R.T. Dev  0.50min
Max. RRF Dev :  20%     Max. Rel. Area : 150%
```

	Compound	Amount	Calc.	%Drift	Area%	Dev(min)	RT Window
1 S	O-TERPHENYL	50.000	47.706	4.6	98	0.00	5.92- 6.08
2 H	TPH (C10-C28)	2000.000	1825.270	8.7	94	0.00	2.95- 8.36

(#) = Out of Range SPCC's out = 0 CCC's out = 0
YY17279.D F_DRO.M Thu Nov 18 11:50:54 2010

8.6.6

8

Continuing Calibration Summary

Job Number: F77897
Account: TETTNOAK Tetra Tech, Inc
Project: Holloman AFB; Alamogordo, NM

Sample: GYY675-CC628
Lab FileID: YY18699.D

Evaluate Continuing Calibration Report

```
Data File : C:\MSDCHEM\2\DATA\1116DRO\YY18699.D          Vial: 64
Acq On    : 11-17-10 01:33:17 PM                     Operator: marthav
Sample    : cc628-1000                               Inst    : FID 5
Misc      : op34996,gyy675,1040,,,1,1,water          Multiplr: 1.00
IntFile   : events.e

Method       : C:\MSDCHEM\2\METHODS\F_DRO.M (Chemstation Integrator)
Title        : TPH by SW846 8015C
Last Update  : Thu Nov 18 09:44:52 2010
Response via : Multiple Level Calibration

Min. RRF     :   0.000  Min. Rel. Area :  50%  Max. R.T. Dev  0.50min
Max. RRF Dev :  20%     Max. Rel. Area : 150%
```

	Compound	Amount	Calc.	%Drift	Area%	Dev(min)	RT Window
1 S	O-TERPHENYL	25.000	22.412	10.4	89	0.00	5.92- 6.08
2 H	TPH (C10-C28)	1000.000	913.815	8.6	88	0.00	2.95- 8.36

(#) = Out of Range SPCC's out = 0 CCC's out = 0
YY17278.D F_DRO.M Thu Nov 18 11:53:06 2010

8.6.7

8

Continuing Calibration Summary

Job Number: F77897
Account: TETTNOAK Tetra Tech, Inc
Project: Holloman AFB; Alamogordo, NM

Sample: GYY677-CC628
Lab FileID: YY18771.D

Evaluate Continuing Calibration Report

```
Data File : C:\MSDCHEM\2\DATA\1119DRO\YY18771.D          Vial: 20
Acq On    : 11-19-10 06:38:40 PM                     Operator: marthav
Sample    : cc628-1000                               Inst    : FID 5
Misc      : op35064,gyy677,29.9,,,1,1,soil           Multiplr: 1.00
IntFile   : events.e

Method       : C:\MSDCHEM\2\METHODS\F_DRO.M (Chemstation Integrator)
Title        : TPH by SW846 8015C
Last Update  : Fri Nov 19 13:31:31 2010
Response via : Multiple Level Calibration

Min. RRF     :   0.000  Min. Rel. Area :  50%  Max. R.T. Dev  0.50min
Max. RRF Dev :  20%     Max. Rel. Area : 150%
```

	Compound	Amount	Calc.	%Drift	Area%	Dev(min)	RT Window
1 S	O-TERPHENYL	25.000	27.751	-11.0	110	0.00	5.88- 6.05
2 H	TPH (C10-C28)	1000.000	1097.716	-9.8	106	0.00	2.95- 8.36

(#) = Out of Range SPCC's out = 0 CCC's out = 0
YY17278.D F_DRO.M Mon Nov 22 10:59:32 2010

8.6.8

8

Continuing Calibration Summary

Job Number: F77897
Account: TETTNOAK Tetra Tech, Inc
Project: Holloman AFB; Alamogordo, NM

Sample: GYY677-CC628
Lab FileID: YY18783.D

Evaluate Continuing Calibration Report

```
Data File : C:\MSDCHEM\2\DATA\1119DRO\YY18783.D          Vial: 32
Acq On    : 19 Nov 2010  11:39 pm                    Operator: marthav
Sample    : cc628-1000                               Inst    : FID 5
Misc      : op35064,gyy677,30.0,,,1,1,soil           Multiplr: 1.00
IntFile   : events.e

Method       : C:\MSDCHEM\2\METHODS\F_DRO.M (Chemstation Integrator)
Title        : TPH by SW846 8015C
Last Update  : Fri Nov 19 13:31:31 2010
Response via : Multiple Level Calibration

Min. RRF     :   0.000  Min. Rel. Area :  50%  Max. R.T. Dev  0.50min
Max. RRF Dev :  20%     Max. Rel. Area : 150%
```

	Compound	Amount	Calc.	%Drift	Area%	Dev(min)	RT Window
1 S	O-TERPHENYL	25.000	28.108	-12.4	112	0.00	5.88- 6.05
2 H	TPH (C10-C28)	1000.000	1062.403	-6.2	102	0.00	2.95- 8.36

(#) = Out of Range SPCC's out = 0 CCC's out = 0
YY17278.D F_DRO.M Mon Nov 22 10:59:33 2010

8.6.9

Continuing Calibration Summary

Job Number: F77897
Account: TETTNOAK Tetra Tech, Inc
Project: Holloman AFB; Alamogordo, NM

Sample: GYY677-CC628
Lab FileID: YY18795.D

Evaluate Continuing Calibration Report

```
Data File : C:\MSDCHEM\2\DATA\1119DRO\YY18795.D          Vial: 44
Acq On    : 11-20-10 04:38:31 AM                     Operator: marthav
Sample    : cc628-1000                               Inst    : FID 5
Misc      : op35013,gyy677,30.4,,,1,1,soil           Multiplr: 1.00
IntFile   : events.e

Method       : C:\MSDCHEM\2\METHODS\F_DRO.M (Chemstation Integrator)
Title        : TPH by SW846 8015C
Last Update  : Fri Nov 19 13:31:31 2010
Response via : Multiple Level Calibration

Min. RRF     :   0.000  Min. Rel. Area :  50%  Max. R.T. Dev  0.50min
Max. RRF Dev :  20%     Max. Rel. Area : 150%
```

	Compound	Amount	Calc.	%Drift	Area%	Dev(min)	RT Window
1 S	O-TERPHENYL	25.000	27.018	-8.1	107	0.00	5.88- 6.05
2 H	TPH (C10-C28)	1000.000	1043.957	-4.4	101	0.00	2.95- 8.36

(#) = Out of Range SPCC's out = 0 CCC's out = 0
YY17278.D F_DRO.M Mon Nov 22 10:59:34 2010

8.6.10

8

Continuing Calibration Summary

Job Number: F77897
Account: TETTNOAK Tetra Tech, Inc
Project: Holloman AFB; Alamogordo, NM

Sample: GYY677-CC628
Lab FileID: YY18807.D

Evaluate Continuing Calibration Report

```
Data File : C:\MSDCHEM\2\DATA\1119DRO\YY18807.D          Vial: 44
Acq On    : 11-20-10 09:37:19 AM                     Operator: marthav
Sample    : cc628-1000                               Inst    : FID 5
Misc      : op35013,gyy677,30.3,,,1,1,soil           Multiplr: 1.00
IntFile   : events.e

Method       : C:\MSDCHEM\2\METHODS\F_DRO.M (Chemstation Integrator)
Title        : TPH by SW846 8015C
Last Update  : Fri Nov 19 13:31:31 2010
Response via : Multiple Level Calibration

Min. RRF     :   0.000  Min. Rel. Area :  50%  Max. R.T. Dev  0.50min
Max. RRF Dev :  20%     Max. Rel. Area : 150%
```

	Compound	Amount	Calc.	%Drift	Area%	Dev(min)	RT Window
1 S	O-TERPHENYL	25.000	27.668	-10.7	110	0.00	5.88- 6.05
2 H	TPH (C10-C28)	1000.000	1072.907	-7.3	103	0.00	2.95- 8.36

(#) = Out of Range SPCC's out = 0 CCC's out = 0
YY17278.D F_DRO.M Mon Nov 22 10:59:35 2010

8.6.11

8

Initial Calibration Summary

Job Number: F77897
Account: TETTNOAK Tetra Tech, Inc
Project: Holloman AFB; Alamogordo, NM

Sample: GZF1543-ICC1543
Lab FileID: ZF36759.D

Response Factor Report FID 3

```
Method       : C:\HPCHEM\1\METHODS\F_DRO.M (Chemstation Integrator)
Title        : TPH by SW846 8015B
Last Update  : Tue Aug 31 12:35:44 2010
Response via : Initial Calibration

Calibration Files
200 =ZF36757.D   500 =ZF36758.D   1000=ZF36759.D   2000=ZF36760.D
3000   =ZF36761.D    4000   =ZF36762.D
```

	Compound	200	500	1000	2000	3000	4000	Avg	%RSD
1) S	O-TERPHENYL	1.254	1.359	1.403	1.293	1.319	1.409	1.339 E4	4.63
2) H	TPH (C10-C28)	1.165	1.221	1.242	1.140	1.166	1.250	1.197 E4	3.85

(#) = Out of Range

F_DRO.M Tue Aug 31 14:26:37 2010

8.6.12

8

Initial Calibration Verification

Job Number: F77897
Account: TETTNOAK Tetra Tech, Inc
Project: Holloman AFB; Alamogordo, NM

Sample: GZF1543-ICV1543
Lab FileID: ZF36763.D

Evaluate Continuing Calibration Report

```
Data File : C:\HPCHEM\1\DATA\0831DRO\ZF36763.D          Vial: 8
Acq On    : 31 Aug 2010  12:13 pm                   Operator: marke
Sample    : icv1543-1000                            Inst    : FID 3
Misc      : op34172,gzf1543,1000,,,1,1,water        Multiplr: 1.00
IntFile   : events.e

Method       : C:\HPCHEM\1\METHODS\F_DRO.M (Chemstation Integrator)
Title        : TPH by SW846 8015B
Last Update  : Tue Aug 31 12:35:44 2010
Response via : Multiple Level Calibration

Min. RRF     :   0.000  Min. Rel. Area :  50%  Max. R.T. Dev  0.50min
Max. RRF Dev :  15%     Max. Rel. Area : 150%

       Compound                Amount  Calc.    %Drift Area% Dev(min)RT Window
 ---------------------------------------------------------------------------
 1 S   O-TERPHENYL                        ----------NA----------
 2 H   TPH (C10-C28)          1000.000 1006.919     -0.7   97   0.00    2.79- 8.68
---------------------------------------------------------------------------
---------------------------------------------------------------------------

   (#) = Out of Range               SPCC's out = 0  CCC's out = 0
    ZF36759.D  F_DRO.M          Tue Aug 31 14:26:23 2010
```

8.6.13

8

Continuing Calibration Summary

Job Number: F77897
Account: TETTNOAK Tetra Tech, Inc
Project: Holloman AFB; Alamogordo, NM

Sample: GZF1576-CC1543
Lab FileID: ZF37621.D

Evaluate Continuing Calibration Report

```
Data File : C:\HPCHEM\1\DATA\1117DRO\ZF37621.D          Vial: 2
Acq On    : 17 Nov 2010   1:18 pm                   Operator: enoca
Sample    : cc1543-1000                             Inst    : FID 3
Misc      : op34997,gzf1576,30.0,,,1,1,soil         Multiplr: 1.00
IntFile   : events.e

Method       : C:\HPCHEM\1\METHODS\F_DRO.M (Chemstation Integrator)
Title        : TPH by SW846 8015C
Last Update  : Wed Nov 17 13:22:15 2010
Response via : Multiple Level Calibration

Min. RRF     :   0.000  Min. Rel. Area :  50%  Max. R.T. Dev  0.50min
Max. RRF Dev :  20%     Max. Rel. Area : 150%
```

	Compound	Amount	Calc.	%Drift	Area%	Dev(min)	RT Window
1 S	O-TERPHENYL	25.000	27.865	-11.5	106	0.00	6.17- 6.37
2 H	TPH (C10-C28)	1000.000	1123.078	-12.3	108	0.00	2.64- 8.51

(#) = Out of Range SPCC's out = 0 CCC's out = 0
ZF36759.D F_DRO.M Fri Nov 19 08:52:52 2010

8.6.14

8

Continuing Calibration Summary

Job Number: F77897
Account: TETTNOAK Tetra Tech, Inc
Project: Holloman AFB; Alamogordo, NM

Sample: GZF1576-CC1543
Lab FileID: ZF37633.D

Evaluate Continuing Calibration Report

```
Data File : C:\HPCHEM\1\DATA\1117DRO\ZF37633.D          Vial: 2
Acq On    : 17 Nov 2010   6:12 pm                   Operator: enoca
Sample    : cc1543-1000                             Inst    : FID 3
Misc      : op34997,gzf1576,29.7,,,1,1,soil         Multiplr: 1.00
IntFile   : events.e

Method       : C:\HPCHEM\1\METHODS\F_DRO.M (Chemstation Integrator)
Title        : TPH by SW846 8015C
Last Update  : Wed Nov 17 13:22:15 2010
Response via : Multiple Level Calibration

Min. RRF     :   0.000  Min. Rel. Area :  50%  Max. R.T. Dev  0.50min
Max. RRF Dev :  20%     Max. Rel. Area : 150%
```

	Compound	Amount	Calc.	%Drift	Area%	Dev(min)	RT Window
1 S	O-TERPHENYL	25.000	28.292	-13.2	108	0.00	6.17- 6.37
2 H	TPH (C10-C28)	1000.000	1146.545	-14.7	111	0.00	2.64- 8.51

(#) = Out of Range SPCC's out = 0 CCC's out = 0
ZF36759.D F_DRO.M Fri Nov 19 08:52:53 2010

8.6.15

8

Continuing Calibration Summary

Job Number: F77897
Account: TETTNOAK Tetra Tech, Inc
Project: Holloman AFB; Alamogordo, NM

Sample: GZF1576-CC1543
Lab FileID: ZF37646.D

Evaluate Continuing Calibration Report

```
Data File : C:\HPCHEM\1\DATA\1117DRO\ZF37646.D          Vial: 2
Acq On    : 17 Nov 2010  10:35 pm                   Operator: enoca
Sample    : cc1543-1000                             Inst    : FID 3
Misc      : op34997,gzf1576,29.5,,,1,1,soil         Multiplr: 1.00
IntFile   : events.e

Method       : C:\HPCHEM\1\METHODS\F_DRO.M (Chemstation Integrator)
Title        : TPH by SW846 8015C
Last Update  : Wed Nov 17 13:22:15 2010
Response via : Multiple Level Calibration

Min. RRF     :   0.000  Min. Rel. Area :  50%  Max. R.T. Dev  0.50min
Max. RRF Dev :  20%     Max. Rel. Area : 150%
```

	Compound	Amount	Calc.	%Drift	Area%	Dev(min)	RT Window
1 S	O-TERPHENYL	25.000	28.529	-14.1	109	0.00	6.17- 6.37
2 H	TPH (C10-C28)	1000.000	1176.567	-17.7	113	0.00	2.64- 8.51

(#) = Out of Range SPCC's out = 0 CCC's out = 0
ZF36759.D F_DRO.M Fri Nov 19 08:52:53 2010

8.6.16

8

Continuing Calibration Summary

Job Number: F77897
Account: TETTNOAK Tetra Tech, Inc
Project: Holloman AFB; Alamogordo, NM

Sample: GZF1576-CC1543
Lab FileID: ZF37658.D

Evaluate Continuing Calibration Report

```
Data File : C:\HPCHEM\1\DATA\1117DRO\ZF37658.D          Vial: 34
Acq On    : 18 Nov 2010   2:37 am                   Operator: enoca
Sample    : cc1543-1000                             Inst    : FID 3
Misc      : op35007,gzf1576,1050,,,1,1,water        Multiplr: 1.00
IntFile   : events.e

Method       : C:\HPCHEM\1\METHODS\F_DRO.M (Chemstation Integrator)
Title        : TPH by SW846 8015C
Last Update  : Wed Nov 17 13:22:15 2010
Response via : Multiple Level Calibration

Min. RRF     :   0.000  Min. Rel. Area :  50%  Max. R.T. Dev  0.50min
Max. RRF Dev :  20%     Max. Rel. Area : 150%
```

	Compound	Amount	Calc.	%Drift	Area%	Dev(min)	RT Window
1 S	O-TERPHENYL	25.000	27.426	-9.7	105	0.00	6.17- 6.37
2 H	TPH (C10-C28)	1000.000	1127.256	-12.7	109	0.00	2.64- 8.51

(#) = Out of Range SPCC's out = 0 CCC's out = 0
ZF36759.D F_DRO.M Fri Nov 19 08:52:53 2010

8.6.17

8

Continuing Calibration Summary

Job Number: F77897
Account: TETTNOAK Tetra Tech, Inc
Project: Holloman AFB; Alamogordo, NM

Sample: GZF1576-CC1543
Lab FileID: ZF37671.D

Evaluate Continuing Calibration Report

```
Data File : C:\HPCHEM\1\DATA\1117DRO\ZF37671.D          Vial: 34
Acq On    : 18 Nov 2010   6:58 am                   Operator: enoca
Sample    : cc1543-1000                             Inst    : FID 3
Misc      : op35007,gzf1576,1050,,,1,1,water        Multiplr: 1.00
IntFile   : events.e

Method       : C:\HPCHEM\1\METHODS\F_DRO.M (Chemstation Integrator)
Title        : TPH by SW846 8015C
Last Update  : Wed Nov 17 13:22:15 2010
Response via : Multiple Level Calibration

Min. RRF     :   0.000  Min. Rel. Area :  50%  Max. R.T. Dev  0.50min
Max. RRF Dev :  20%     Max. Rel. Area : 150%
```

	Compound	Amount	Calc.	%Drift	Area%	Dev(min)	RT Window
1 S	O-TERPHENYL	25.000	28.129	-12.5	107	0.00	6.17- 6.37
2 H	TPH (C10-C28)	1000.000	1175.373	-17.5	113	0.00	2.64- 8.51

(#) = Out of Range SPCC's out = 0 CCC's out = 0
ZF36759.D F_DRO.M Fri Nov 19 08:52:53 2010

8.6.18

8

Continuing Calibration Summary

Job Number: F77897
Account: TETTNOAK Tetra Tech, Inc
Project: Holloman AFB; Alamogordo, NM

Sample: GZF1576-CC1543
Lab FileID: ZF37681.D

Evaluate Continuing Calibration Report

```
Data File : C:\HPCHEM\1\DATA\1117DRO\ZF37681.D          Vial: 53
Acq On    : 18 Nov 2010  10:21 am                    Operator: enoca
Sample    : cc1543-2000                              Inst    : FID 3
Misc      : op35007,gzf1576,1020,,,1,1,water         Multiplr: 1.00
IntFile   : events.e

Method       : C:\HPCHEM\1\METHODS\F_DRO.M (Chemstation Integrator)
Title        : TPH by SW846 8015C
Last Update  : Wed Nov 17 13:22:15 2010
Response via : Multiple Level Calibration

Min. RRF     :   0.000  Min. Rel. Area :  50%  Max. R.T. Dev  0.50min
Max. RRF Dev :  20%     Max. Rel. Area : 150%
```

	Compound	Amount	Calc.	%Drift	Area%	Dev(min)	RT Window
1 S	O-TERPHENYL	50.000	46.200	7.6	96	0.00	6.17- 6.37
2 H	TPH (C10-C28)	2000.000	1907.183	4.6	100	0.00	2.64- 8.51

(#) = Out of Range SPCC's out = 0 CCC's out = 0
ZF36760.D F_DRO.M Fri Nov 19 08:54:01 2010

8.6.19

8

Southeast ACCUTEST LABORATORIES

Metals Analysis

QC Data Summaries

Includes the following where applicable:

- Instrument Runlogs
- Initial and Continuing Calibration Blanks
- Initial and Continuing Calibration Checks
- High and Low Check Standards
- Interfering Element Check Standards
- Method Blank Summaries
- Matrix Spike and Duplicate Summaries
- Blank Spike and Lab Control Sample Summaries
- Serial Dilution Summaries

Accutest Laboratories Instrument Runlog
Inorganics Analyses

Login Number: F77897
Account: TETTNOAK - Tetra Tech, Inc
Project: Holloman AFB; Alamogordo, NM

File ID: H31110W3.PRN Date Analyzed: 11/10/10 Methods: SW846 7470A
Analyst: LM Run ID: MA8499
Parameters: Hg

Time	Sample Description	Dilution Factor	PS Recov	Comments
10:12	MA8499-STD1	1		STD01REP
10:14	MA8499-STD2	1		STD02REP1
10:17	MA8499-STD3	1		STD03REP1
10:19	MA8499-STD4	1		STD04REP1
10:22	MA8499-STD5	1		STD05REP1
10:25	MA8499-STD6	1		STD06REP1
10:28	MA8499-HSTD1	1		
10:31	MA8499-ICV1	1		
10:34	MA8499-ICB1	1		
10:37	MA8499-CRI1	1		
10:43	MA8499-CCV1	1		
10:45	MA8499-CCB1	1		
10:48	MP19449-MB1	1		
10:51	MP19449-B1	1		
10:53	F77900-1	1		(sample used for QC only; not part of login F77897)
10:56	MP19449-D1	1		
10:58	MP19449-SD1	5		
11:00	MP19449-S1	1		
11:03	MP19449-S2	1		
11:05	ZZZZZZ	1		
11:08	ZZZZZZ	1		
11:11	ZZZZZZ	1		
11:13	MA8499-CCV2	1		
11:16	MA8499-CCB2	1		
11:18	F77897-39	1		

----------> Last reportable sample/prep for job F77897

11:20	ZZZZZZ	1		
11:20	ZZZZZZ	1		
11:30	MA8499-CRI2	1		
11:32	MA8499-CCV3	1		
11:35	MA8499-CCB3	1		

----------> Last reportable CCB for job F77897
Refer to raw data for calibration curve and standards.

BLANK RESULTS SUMMARY
Part 1 - Initial and Continuing Calibration Blanks

Login Number: F77897
Account: TETTNOAK - Tetra Tech, Inc
Project: Holloman AFB; Alamogordo, NM

File ID: H31110W3.PRN Date Analyzed: 11/10/10 Methods: SW846 7470A
QC Limits: result < RL Run ID: MA8499 Units: ug/l

Time:			10:34		10:45		11:16		11:35	
Sample ID:			ICB1		CCB1		CCB2		CCB3	
Metal	RL	IDL	raw	final	raw	final	raw	final	raw	final
Mercury	1.0	.071	-0.053	<1.0	-0.0080	<1.0	-0.019	<1.0	0.0090	<1.0

(*) Outside of QC limits
(anr) Analyte not requested

CALIBRATION CHECK STANDARDS SUMMARY
Initial and Continuing Calibration Checks

Login Number: F77897
Account: TETTNOAK - Tetra Tech, Inc
Project: Holloman AFB; Alamogordo, NM

File ID: H31110W3.PRN Date Analyzed: 11/10/10 Methods: SW846 7470A
QC Limits: 90 to 110 % Recovery Run ID: MA8499 Units: ug/l

Time:		10:31			10:43			11:13	
Sample ID:	ICV	ICV1		CCV	CCV1		CCV	CCV2	
Metal	True	Results	% Rec	True	Results	% Rec	True	Results	% Rec
Mercury	3	2.8	93.3	3.0	3.0	100.0	3	2.9	96.7

(*) Outside of QC limits
(anr) Analyte not requested

CALIBRATION CHECK STANDARDS SUMMARY
Initial and Continuing Calibration Checks

Login Number: F77897
Account: TETTNOAK - Tetra Tech, Inc
Project: Holloman AFB; Alamogordo, NM

File ID: H31110W3.PRN Date Analyzed: 11/10/10 Methods: SW846 7470A
QC Limits: 90 to 110 % Recovery Run ID: MA8499 Units: ug/l

Time:		11:32	
Sample ID:	CCV	CCV3	
Metal	True	Results	% Rec
Mercury	3	2.8	93.3

(*) Outside of QC limits
(anr) Analyte not requested

HIGH STANDARD CHECK SUMMARY

Login Number: F77897
Account: TETTNOAK - Tetra Tech, Inc
Project: Holloman AFB; Alamogordo, NM

File ID: H31110W3.PRN Date Analyzed: 11/10/10 Methods: SW846 7470A
QC Limits: 95 to 105 % Recovery Run ID: MA8499 Units: ug/l

Time:		10:28	
Sample ID:	HSTD	HSTD1	
Metal	True	Results	% Rec
Mercury	6	6.1	101.7

(*) Outside of QC limits
(anr) Analyte not requested

9.1.3

9

LOW CALIBRATION CHECK STANDARDS SUMMARY

Login Number: F77897
Account: TETTNOAK - Tetra Tech, Inc
Project: Holloman AFB; Alamogordo, NM

File ID: H31110W3.PRN Date Analyzed: 11/10/10 Methods: SW846 7470A
QC Limits: 80 to 120 % Recovery Run ID: MA8499 Units: ug/l

Time:			10:37		11:30	
Sample ID:	CRI	CRIA	CRI1		CRI2	
Metal	True	True	Results	% Rec	Results	% Rec
Mercury	0.20		0.23	115.0	0.19	95.0

(*) Outside of QC limits
(anr) Analyte not requested

9.1.4

9

Accutest Laboratories Instrument Runlog
Inorganics Analyses

Login Number: F77897
Account: TETTNOAK - Tetra Tech, Inc
Project: Holloman AFB; Alamogordo, NM

File ID: H31111S3.PRN Date Analyzed: 11/11/10 Methods: SW846 7471B
Analyst: LM Run ID: MA8503
Parameters: Hg

Time	Sample Description	Dilution Factor	PS Recov	Comments
09:47	MA8503-STD1	1		STD01REP1
09:49	MA8503-STD2	1		STD02REP1
09:51	MA8503-STD3	1		STD03REP1
09:54	MA8503-STD4	1		STD04REP1
09:57	MA8503-STD5	1		STD05REP1
09:59	MA8503-STD6	1		STD06REP1
10:02	MA8503-HSTD1	1		
10:04	MA8503-ICV1	1		
10:06	MA8503-ICB1	1		
10:09	MA8503-CRI1	1		
10:12	MA8503-CCV1	1		
10:15	MA8503-CCB1	1		
10:17	MP19458-MB1	1		
10:19	MP19458-B1	1		
10:21	F77915-1	1		(sample used for QC only; not part of login F77897)
10:24	MP19458-D1	1		
10:26	MP19458-SD1	5		
10:28	MP19458-S1	1		
10:31	MP19458-S2	1		
10:34	ZZZZZZ	1		
10:36	ZZZZZZ	1		
10:39	ZZZZZZ	1		
10:41	MA8503-CCV2	1		
10:44	MA8503-CCB2	1		
10:46	ZZZZZZ	1		
10:48	ZZZZZZ	1		
10:51	ZZZZZZ	1		
10:53	ZZZZZZ	1		
10:55	ZZZZZZ	1		
10:59	ZZZZZZ	1		
11:01	ZZZZZZ	1		
11:03	ZZZZZZ	1		
11:05	ZZZZZZ	1		

Accutest Laboratories Instrument Runlog
Inorganics Analyses

Login Number: F77897
Account: TETTNOAK - Tetra Tech, Inc
Project: Holloman AFB; Alamogordo, NM

File ID: H31111S3.PRN Date Analyzed: 11/11/10 Methods: SW846 7471B
Analyst: LM Run ID: MA8503
Parameters: Hg

Time	Sample Description	Dilution Factor	PS Recov	Comments
11:09	ZZZZZZ	1		
11:11	MA8503-CCV3	1		
11:13	MA8503-CCB3	1		
11:15	ZZZZZZ	1		
11:19	ZZZZZZ	1		
11:22	ZZZZZZ	1		
11:24	ZZZZZZ	1		
11:27	ZZZZZZ	1		
11:30	MP19459-MB1	1		
11:32	MP19459-B1	1		
11:34	F77897-1	1		
11:37	MP19459-D1	1		
11:40	MP19459-SD1	5		
11:42	MA8503-CCV4	1		
11:45	MA8503-CCB4	1		
11:47	MP19459-S1	1		
11:49	MP19459-S2	1		
11:53	F77897-2	1		
11:56	F77897-3	1		
11:58	F77897-4	1		
12:01	F77897-5	1		
12:05	F77897-6	1		
12:07	F77897-7	1		
12:10	F77897-8	1		
12:12	F77897-9	1		
12:14	MA8503-CCV5	1		
12:17	MA8503-CCB5	1		
12:19	F77897-10	1		
12:22	F77897-11	1		
12:24	F77897-12	1		
12:26	F77897-13	1		
12:29	F77897-14	1		
12:31	F77897-15	1		

Accutest Laboratories Instrument Runlog
Inorganics Analyses

Login Number: F77897
Account: TETTNOAK - Tetra Tech, Inc
Project: Holloman AFB; Alamogordo, NM

File ID: H31111S3.PRN Date Analyzed: 11/11/10 Methods: SW846 7471B
Analyst: LM Run ID: MA8503
Parameters: Hg

	Time	Sample Description	Dilution Factor	PS Recov	Comments
	12:34	F77897-16	1		
	12:37	F77897-17	1		
	12:39	F77897-18	1		
	12:42	F77897-19	1		
	12:46	MA8503-CCV6	1		
	12:48	MA8503-CCB6	1		
	12:50	F77897-20	1		
---------->	Last reportable sample/prep for job F77897				
	12:53	MA8503-CCV7	1		
	12:55	MA8503-CCB7	1		
	12:58	MP19460-MB1	1		
	13:00	MP19460-B1	1		
	13:02	MP19460-B2	1		
	13:07	ZZZZZZ	1		
	13:13	ZZZZZZ	2		
	13:15	ZZZZZZ	2		
	13:18	MA8503-CRI2	1		
	13:20	MA8503-CCV8	1		
	13:23	MA8503-CCB8	1		
---------->	Last reportable CCB for job F77897				

Refer to raw data for calibration curve and standards.

BLANK RESULTS SUMMARY
Part 1 - Initial and Continuing Calibration Blanks

Login Number: F77897
Account: TETTNOAK - Tetra Tech, Inc
Project: Holloman AFB; Alamogordo, NM

File ID: H31111S3.PRN Date Analyzed: 11/11/10 Methods: SW846 7471B
QC Limits: result < RL Run ID: MA8503 Units: ug/l

Time:			10:06		10:15		10:44		11:13	
Sample ID:			ICB1		CCB1		CCB2		CCB3	
Metal	RL	IDL	raw	final	raw	final	raw	final	raw	final
Mercury	1.0	.071	-0.044	<1.0	-0.036	<1.0	-0.016	<1.0	-0.076	<1.0

(*) Outside of QC limits
(anr) Analyte not requested

BLANK RESULTS SUMMARY
Part 1 - Initial and Continuing Calibration Blanks

Login Number: F77897
Account: TETTNOAK - Tetra Tech, Inc
Project: Holloman AFB; Alamogordo, NM

File ID: H31111S3.PRN Date Analyzed: 11/11/10 Methods: SW846 7471B
QC Limits: result < RL Run ID: MA8503 Units: ug/l

Time:			11:45		12:17		12:48		12:55	
Sample ID:			CCB4		CCB5		CCB6		CCB7	
Metal	RL	IDL	raw	final	raw	final	raw	final	raw	final
Mercury	1.0	.071	-0.060	<1.0	-0.024	<1.0	-0.041	<1.0	-0.050	<1.0

(*) Outside of QC limits
(anr) Analyte not requested

BLANK RESULTS SUMMARY
Part 1 - Initial and Continuing Calibration Blanks

Login Number: F77897
Account: TETTNOAK - Tetra Tech, Inc
Project: Holloman AFB; Alamogordo, NM

File ID: H31111S3.PRN Date Analyzed: 11/11/10 Methods: SW846 7471B
QC Limits: result < RL Run ID: MA8503 Units: ug/l

Time:			13:23	
Sample ID:			CCB8	
Metal	RL	IDL	raw	final
Mercury	1.0	.071	-0.023	<1.0

(*) Outside of QC limits
(anr) Analyte not requested

9.2.1
9

CALIBRATION CHECK STANDARDS SUMMARY
Initial and Continuing Calibration Checks

Login Number: F77897
Account: TETTNOAK - Tetra Tech, Inc
Project: Holloman AFB; Alamogordo, NM

File ID: H31111S3.PRN Date Analyzed: 11/11/10 Methods: SW846 7471B
QC Limits: 90 to 110 % Recovery Run ID: MA8503 Units: ug/l

Time:		10:04			10:12			10:41	
Sample ID:	ICV	ICV1		CCV	CCV1		CCV	CCV2	
Metal	True	Results	% Rec	True	Results	% Rec	True	Results	% Rec
Mercury	3	2.9	96.7	3.0	3.0	100.0	3	2.9	96.7

(*) Outside of QC limits
(anr) Analyte not requested

CALIBRATION CHECK STANDARDS SUMMARY
Initial and Continuing Calibration Checks

Login Number: F77897
Account: TETTNOAK - Tetra Tech, Inc
Project: Holloman AFB; Alamogordo, NM

File ID: H31111S3.PRN Date Analyzed: 11/11/10 Methods: SW846 7471B
QC Limits: 90 to 110 % Recovery Run ID: MA8503 Units: ug/l

Time:		11:11			11:42			12:14	
Sample ID:	CCV	CCV3		CCV	CCV4		CCV	CCV5	
Metal	True	Results	% Rec	True	Results	% Rec	True	Results	% Rec
Mercury	3	2.8	93.3	3	2.8	93.3	3	2.7	90.0

(*) Outside of QC limits
(anr) Analyte not requested

CALIBRATION CHECK STANDARDS SUMMARY
Initial and Continuing Calibration Checks

Login Number: F77897
Account: TETTNOAK - Tetra Tech, Inc
Project: Holloman AFB; Alamogordo, NM

File ID: H31111S3.PRN Date Analyzed: 11/11/10 Methods: SW846 7471B
QC Limits: 90 to 110 % Recovery Run ID: MA8503 Units: ug/l

Time:		12:46			12:53			13:20	
Sample ID:	CCV	CCV6		CCV	CCV7		CCV	CCV8	
Metal	True	Results	% Rec	True	Results	% Rec	True	Results	% Rec
Mercury	3	2.9	96.7	3	2.8	93.3	3	2.9	96.7

(*) Outside of QC limits
(anr) Analyte not requested

HIGH STANDARD CHECK SUMMARY

Login Number: F77897
Account: TETTNOAK - Tetra Tech, Inc
Project: Holloman AFB; Alamogordo, NM

File ID: H31111S3.PRN Date Analyzed: 11/11/10 Methods: SW846 7471B
QC Limits: 95 to 105 % Recovery Run ID: MA8503 Units: ug/l

Time:		10:02	
Sample ID:	HSTD	HSTD1	
Metal	True	Results	% Rec
Mercury	6.0	6.0	100.0

(*) Outside of QC limits
(anr) Analyte not requested

LOW CALIBRATION CHECK STANDARDS SUMMARY

Login Number: F77897
Account: TETTNOAK - Tetra Tech, Inc
Project: Holloman AFB; Alamogordo, NM

File ID: H31111S3.PRN Date Analyzed: 11/11/10 Methods: SW846 7471B
QC Limits: 80 to 120 % Recovery Run ID: MA8503 Units: ug/l

Time:			10:09		13:18	
Sample ID:	CRI	CRIA	CRI1		CRI2	
Metal	True	True	Results	% Rec	Results	% Rec
Mercury	0.20		0.20	100.0	0.21	105.0

(*) Outside of QC limits
(anr) Analyte not requested

9.2.4

9

Accutest Laboratories Instrument Runlog
Inorganics Analyses

Login Number: F77897
Account: TETTNOAK - Tetra Tech, Inc
Project: Holloman AFB; Alamogordo, NM

File ID: SA111110M1.ICP Date Analyzed: 11/11/10 Methods: SW846 6010C
Analyst: RS Run ID: MA8504
Parameters: As,Ba,Cd,Cr,Pb,Se,Ag

Time	Sample Description	Dilution Factor	PS Recov	Comments
08:18	MA8504-STD1	1		STDA
08:23	MA8504-STD2	1		STDB
08:26	MA8504-STD3	1		STDC
08:30	MA8504-HSTD1	1		
08:34	MA8504-ICV1	1		
08:40	MA8504-ICB1	1		
08:44	MA8504-CRIA1	1		
08:48	MA8504-CRIA2	1		
08:56	MA8504-ICSA1	1		
09:02	MA8504-ICSAB1	1		
09:07	MA8504-CCV1	1		
09:15	MA8504-CCB1	1		
10:03	ZZZZZZ	2		
10:07	ZZZZZZ	4		
10:12	ZZZZZZ	2		
10:16	ZZZZZZ	10		
10:20	ZZZZZZ	10		
10:24	ZZZZZZ	10		
10:28	ZZZZZZ	100		
10:32	ZZZZZZ	2		
10:36	MP19454-MB1	1		
10:40	MP19454-B1	1		
10:44	MA8504-CCV2	1		
10:48	MA8504-CCB2	1		
10:52	MP19454-B2	1		
10:56	ZZZZZZ	10		
11:04	ZZZZZZ	10		
11:08	ZZZZZZ	4		
11:12	ZZZZZZ	1		
11:16	ZZZZZZ	100		
11:20	ZZZZZZ	1		
11:24	ZZZZZZ	1		
11:28	ZZZZZZ	10		

Accutest Laboratories Instrument Runlog
Inorganics Analyses

Login Number: F77897
Account: TETTNOAK - Tetra Tech, Inc
Project: Holloman AFB; Alamogordo, NM

File ID: SA111110M1.ICP Date Analyzed: 11/11/10 Methods: SW846 6010C
Analyst: RS Run ID: MA8504
Parameters: As,Ba,Cd,Cr,Pb,Se,Ag

Time	Sample Description	Dilution Factor	PS Recov	Comments
11:32	MA8504-CCV3	1		
11:36	MA8504-CCB3	1		
11:40	ZZZZZZ	4		
11:44	ZZZZZZ	2		
11:48	ZZZZZZ	10		
11:52	ZZZZZZ	10		
11:57	ZZZZZZ	2		
12:01	ZZZZZZ	2		
12:05	ZZZZZZ	2		
12:09	ZZZZZZ	10		
12:13	F77899-13	10		(sample used for QC only; not part of login F77897)
12:17	MP19447-D1	10		
12:21	MA8504-CCV4	1		
12:25	MA8504-CCB4	1		
12:29	MP19447-S1	10		
12:34	MP19447-S2	10		
12:38	MP19447-PS1	10		
12:42	MP19447-SD1	50		
12:46	ZZZZZZ	10		
12:51	ZZZZZZ	10		
12:55	ZZZZZZ	10		
12:59	ZZZZZZ	10		
13:04	ZZZZZZ	10		
13:08	ZZZZZZ	10		
13:12	MA8504-CCV5	1		
13:16	MA8504-CCB5	1		
13:20	ZZZZZZ	10		
13:24	ZZZZZZ	10		
13:29	ZZZZZZ	10		
13:33	ZZZZZZ	10		
13:37	ZZZZZZ	10		
13:42	ZZZZZZ	10		
13:46	ZZZZZZ	10		

Accutest Laboratories Instrument Runlog
Inorganics Analyses

Login Number: F77897
Account: TETTNOAK - Tetra Tech, Inc
Project: Holloman AFB; Alamogordo, NM

File ID: SA111110M1.ICP Date Analyzed: 11/11/10 Methods: SW846 6010C
Analyst: RS Run ID: MA8504
Parameters: As,Ba,Cd,Cr,Pb,Se,Ag

Time	Sample Description	Dilution Factor	PS Recov	Comments
13:51	ZZZZZZ	10		
13:55	ZZZZZZ	10		
13:59	F77899-13	4		(sample used for QC only; not part of login F77897)
14:09	MA8504-CCV6	1		
14:13	MA8504-CCB6	1		
14:17	MP19447-D1	4		
14:22	MP19447-S1	4		
14:28	MP19447-S2	4		
14:33	MP19447-PS1	4		
14:37	MP19447-SD1	20		
14:41	ZZZZZZ	4		
14:46	ZZZZZZ	4		
14:50	ZZZZZZ	4		
14:54	ZZZZZZ	4		
14:59	ZZZZZZ	4		
15:03	MA8504-CCV7	1		
15:07	MA8504-CCB7	1		
15:11	ZZZZZZ	4		
15:15	ZZZZZZ	4		
15:20	ZZZZZZ	4		
15:24	ZZZZZZ	4		
15:28	ZZZZZZ	4		
15:33	ZZZZZZ	4		
15:37	ZZZZZZ	4		
15:41	ZZZZZZ	4		
15:46	MP19463-MB1	1		
15:50	MP19463-B1	1		
15:54	MA8504-CCV8	1		
15:58	MA8504-CCB8	1		
16:02	F77889-38	1		(sample used for QC only; not part of login F77897)
16:06	MP19463-D1	1		
16:11	MP19463-SD1	5		
16:15	MP19463-PS1	1		

Accutest Laboratories Instrument Runlog
Inorganics Analyses

Login Number: F77897
Account: TETTNOAK - Tetra Tech, Inc
Project: Holloman AFB; Alamogordo, NM

File ID: SA111110M1.ICP Date Analyzed: 11/11/10 Methods: SW846 6010C
Analyst: RS Run ID: MA8504
Parameters: As,Ba,Cd,Cr,Pb,Se,Ag

Time	Sample Description	Dilution Factor	PS Recov	Comments
16:19	MP19463-S1	1		
16:23	MP19463-S2	1		
16:27	ZZZZZZ	1		
16:31	ZZZZZZ	1		
16:36	ZZZZZZ	1		
16:40	ZZZZZZ	1		
16:44	MA8504-CCV9	1		
16:48	MA8504-CCB9	1		
17:07	MA8504-CCV10	1		
17:12	MA8504-CCB10	1		
17:16	ZZZZZZ	1		
17:20	ZZZZZZ	1		
17:24	ZZZZZZ	1		
17:29	ZZZZZZ	1		
17:33	ZZZZZZ	1		
17:37	ZZZZZZ	1		
17:41	ZZZZZZ	1		
17:45	F77897-39	1		
---------->	Last reportable sample/prep for job F77897			
17:53	ZZZZZZ	1		
17:58	MA8504-CCV11	1		
18:01	MA8504-CCB11	1		
18:06	ZZZZZZ	1		
18:10	ZZZZZZ	1		
18:14	ZZZZZZ	1		
18:18	ZZZZZZ	1		
18:22	MP19456-MB1	1		
18:26	MP19456-B1	1		
18:30	F77915-1	1		(sample used for QC only; not part of login F77897)
18:34	MP19456-D1	1		
18:38	MP19456-SD1	5		
18:42	MP19456-PS1	1		
18:46	MA8504-CCV12	1		
18:50	MA8504-CCB12	1		

Accutest Laboratories Instrument Runlog
Inorganics Analyses

Login Number: F77897
Account: TETTNOAK - Tetra Tech, Inc
Project: Holloman AFB; Alamogordo, NM

File ID: SA111110M1.ICP Date Analyzed: 11/11/10 Methods: SW846 6010C
Analyst: RS Run ID: MA8504
Parameters: As,Ba,Cd,Cr,Pb,Se,Ag

Time	Sample Description	Dilution Factor	PS Recov	Comments
18:54	MP19456-S1	1		
18:58	MP19456-S2	1		
19:02	ZZZZZZ	1		
19:06	ZZZZZZ	1		
19:10	ZZZZZZ	1		
19:14	ZZZZZZ	1		
19:18	ZZZZZZ	1		
19:22	ZZZZZZ	1		
19:26	ZZZZZZ	1		
19:31	ZZZZZZ	1		
19:35	MA8504-CCV13	1		
19:39	MA8504-CCB13	1		
19:43	ZZZZZZ	1		
19:47	ZZZZZZ	1		
19:52	ZZZZZZ	1		
19:56	ZZZZZZ	1		
20:00	ZZZZZZ	1		
20:05	F77889-10	4		(sample used for QC only; not part of login F77897)
20:09	MP19452-D1	4		
20:13	MP19452-S1	4		
20:17	MP19452-S2	4		
20:21	MP19452-PS1	4		
20:25	MA8504-CCV14	1		
20:29	MA8504-CCB14	1		
20:33	MP19452-SD1	20		
20:37	MP19472-MB1	1		
20:41	MP19472-B1	1		
20:45	F77965-1	1		(sample used for QC only; not part of login F77897)
20:50	MP19472-D1	1		
20:54	MP19472-SD1	5		
20:58	MP19472-PS1	1		
21:02	MP19472-S1	1		
21:06	MP19472-S2	1		

Accutest Laboratories Instrument Runlog
Inorganics Analyses

Login Number: F77897
Account: TETTNOAK - Tetra Tech, Inc
Project: Holloman AFB; Alamogordo, NM

File ID: SA111110M1.ICP Date Analyzed: 11/11/10 Methods: SW846 6010C
Analyst: RS Run ID: MA8504
Parameters: As,Ba,Cd,Cr,Pb,Se,Ag

Time	Sample Description	Dilution Factor	PS Recov	Comments
21:10	ZZZZZZ	1		
21:14	MA8504-CCV15	1		
21:18	MA8504-CCB15	1		
21:22	ZZZZZZ	1		
21:26	ZZZZZZ	1		
21:30	ZZZZZZ	1		
21:34	ZZZZZZ	1		
21:38	ZZZZZZ	1		
21:43	ZZZZZZ	1		
21:47	ZZZZZZ	1		
21:51	ZZZZZZ	1		
21:55	ZZZZZZ	1		
21:59	ZZZZZZ	1		
22:03	MA8504-CCV16	1		
22:07	MA8504-CCB16	1		
22:11	ZZZZZZ	1		
22:16	ZZZZZZ	1		
22:20	ZZZZZZ	1		
22:24	MP19473-MB1	1		
22:28	MP19473-B1	1		
22:32	F77970-2	1		(sample used for QC only; not part of login F77897)
22:36	MP19473-D1	1		
22:40	MP19473-SD1	5		
22:44	MP19473-PS1	1		
22:48	MP19473-S1	1		
22:52	MA8504-CCV17	1		
22:56	MA8504-CCB17	1		
23:00	MP19473-S2	1		
23:04	ZZZZZZ	1		
23:08	ZZZZZZ	1		
23:13	ZZZZZZ	1		
23:17	MA8504-CRIA3	1		
23:21	MA8504-ICSA2	1		

Accutest Laboratories Instrument Runlog
Inorganics Analyses

Login Number: F77897
Account: TETTNOAK - Tetra Tech, Inc
Project: Holloman AFB; Alamogordo, NM

File ID: SA111110M1.ICP Date Analyzed: 11/11/10 Methods: SW846 6010C
Analyst: RS Run ID: MA8504
Parameters: As,Ba,Cd,Cr,Pb,Se,Ag

Time	Sample Description	Dilution Factor	PS Recov	Comments
23:25	MA8504-ICSAB2	1		
23:29	MA8504-CCV18	1		
23:33	MA8504-CCB18	1		

----------> Last reportable CCB for job F77897
Refer to raw data for calibration curve and standards.

INTERNAL STANDARD SUMMARY

Login Number: F77897
Account: TETTNOAK - Tetra Tech, Inc
Project: Holloman AFB; Alamogordo, NM

File ID: SA111110M1.ICP Date Analyzed: 11/11/10 Methods: SW846 6010C
Analyst: RS Run ID: MA8504
Parameters: As,Ba,Cd,Cr,Pb,Se,Ag

Time	Sample Description	Istd#1	Istd#2	Istd#3	Istd#4	Istd#5
08:18	MA8504-STD1	2011	1613	26991	11238	1071
08:23	MA8504-STD2	1910	1562	25249	10829	993
08:26	MA8504-STD3	1851	1603	25131	10753	940
08:30	MA8504-HSTD1	1832	1572	24770	10693	934
08:34	MA8504-ICV1	1898	1593	25436	10795	990
08:40	MA8504-ICB1	1958 R	1591 R	26187 R	10961 R	1058 R
08:44	MA8504-CRIA1	1963	1576	26071	10962	1067
08:48	MA8504-CRIA2	1991	1588	999999 !	10998	999999 !
08:56	MA8504-ICSA1	1672	1582	22190	10114	849
09:02	MA8504-ICSAB1	1680	1587	22497	10113	843
09:07	MA8504-CCV1	1901	1582	25090	10598	987
09:15	MA8504-CCB1	1985	1591	26385	10756	1061
10:03	ZZZZZZ	1889	1511	24997	10653	985
10:07	ZZZZZZ	1807	1456	24117	10528	910
10:12	ZZZZZZ	1826	1453	24469	10463	961
10:16	ZZZZZZ	2050	1681	27147	11529	1033
10:20	ZZZZZZ	1943	1564	25692	10697	1040
10:24	ZZZZZZ	1957	1551	25751	10730	1047
10:28	ZZZZZZ	1982	1582	26100	10839	1067
10:32	ZZZZZZ	1890	1544	25329	10961	994
10:36	MP19454-MB1	1888	1489	24692	10179	1025
10:40	MP19454-B1	1838	1488	24027	9961	974
10:44	MA8504-CCV2	1937	1608	25788	10845	1003
10:48	MA8504-CCB2	2020	1634	27076	10995	1084
10:52	MP19454-B2	1799	1461	23822	10115	971
10:56	ZZZZZZ	1934	1719	25785	10835	1050
11:04	ZZZZZZ	1958	1630	26011	10820	1058
11:08	ZZZZZZ	1833	1800	24764	10582	991
11:12	ZZZZZZ	1701	2083 !	22913	10114	856
11:16	ZZZZZZ	2029	1656	27273	11088	1097
11:20	ZZZZZZ	1845	1470	24457	10316	986
11:24	ZZZZZZ	1759	1856	23935	10379	919
11:28	ZZZZZZ	2030	1724	26984	11175	1080

INTERNAL STANDARD SUMMARY

Login Number: F77897
Account: TETTNOAK - Tetra Tech, Inc
Project: Holloman AFB; Alamogordo, NM

File ID: SA111110M1.ICP Date Analyzed: 11/11/10 Methods: SW846 6010C
Analyst: RS Run ID: MA8504
Parameters: As,Ba,Cd,Cr,Pb,Se,Ag

Time	Sample Description	Istd#1	Istd#2	Istd#3	Istd#4	Istd#5
11:32	MA8504-CCV3	1925	1634	25430	10547	1008
11:36	MA8504-CCB3	2028	1641	27062	10886	1084
11:40	ZZZZZZ	2118	2068 !	28237	12015	1014
11:44	ZZZZZZ	2017	2069 !	26638	11368	981
11:48	ZZZZZZ	2051	1773	26961	10968	1077
11:52	ZZZZZZ	2036	1708	27081	11021	1071
11:57	ZZZZZZ	2105	2178 !	27902	11548	990
12:01	ZZZZZZ	2045	2126 !	27079	11295	1003
12:05	ZZZZZZ	2061	2128 !	26974	11255	985
12:09	ZZZZZZ	2046	1743	27161	11067	1078
12:13	F77899-13	1836	1493	24445	10320	959
12:17	MP19447-D1	1840	1488	24552	10452	971
12:21	MA8504-CCV4	1873	1581	24798	10279	984
12:25	MA8504-CCB4	2025	1643	26943	10804	1090
12:29	MP19447-S1	1830	1493	24755	10366	967
12:34	MP19447-S2	1816	1475	24407	10374	956
12:38	MP19447-PS1	1835	1488	24514	10358	961
12:42	MP19447-SD1	1942	1559	25970	10642	1054
12:46	ZZZZZZ	1824	1466	24621	10347	969
12:51	ZZZZZZ	1820	1484	24366	10348	965
12:55	ZZZZZZ	1832	1460	24554	10335	968
12:59	ZZZZZZ	1852	1463	24669	10399	967
13:04	ZZZZZZ	1818	1464	24504	10448	968
13:08	ZZZZZZ	1847	1491	24793	10424	973
13:12	MA8504-CCV5	1884	1580	25359	10558	991
13:16	MA8504-CCB5	1987	1587	26928	10815	1076
13:20	ZZZZZZ	1821	1481	24564	10478	946
13:24	ZZZZZZ	1826	1454	24410	10314	967
13:29	ZZZZZZ	1826	1449	24649	10440	966
13:33	ZZZZZZ	1799	1447	24524	10507	959
13:37	ZZZZZZ	1811	1422	24130	10754	971
13:42	ZZZZZZ	1791	1425	24397	10414	950
13:46	ZZZZZZ	1828	1461	24938	10671	970

INTERNAL STANDARD SUMMARY

Login Number: F77897
Account: TETTNOAK - Tetra Tech, Inc
Project: Holloman AFB; Alamogordo, NM

File ID: SA111110M1.ICP Date Analyzed: 11/11/10 Methods: SW846 6010C
Analyst: RS Run ID: MA8504
Parameters: As,Ba,Cd,Cr,Pb,Se,Ag

Time	Sample Description	Istd#1	Istd#2	Istd#3	Istd#4	Istd#5
13:51	ZZZZZZ	1808	1464	24581	10508	972
13:55	ZZZZZZ	1790	1444	24296	10376	954
13:59	F77899-13	1689	1352	23282	10288	864
14:09	MA8504-CCV6	1838	1546	25102	10741	988
14:13	MA8504-CCB6	1956	1570	26314	10961	1071
14:17	MP19447-D1	1685	1400	23535	10231	875
14:22	MP19447-S1	1689	1360	23378	10325	881
14:28	MP19447-S2	1635	1346	22826	10252	849
14:33	MP19447-PS1	1651	1335	22837	10288	850
14:37	MP19447-SD1	1820	1458	25117	10813	999
14:41	ZZZZZZ	1678	1348	23544	10513	886
14:46	ZZZZZZ	1635	1342	23155	10168	861
14:50	ZZZZZZ	1662	1344	23150	10541	879
14:54	ZZZZZZ	1516	1299	22352	10367	791
14:59	ZZZZZZ	1678	1344	23568	10598	894
15:03	MA8504-CCV7	1765	1498	24735	10783	970
15:07	MA8504-CCB7	1912	1531	26495	11212	1072
15:11	ZZZZZZ	1677	1365	23550	10744	869
15:15	ZZZZZZ	1718	1397	24118	11090	873
15:20	ZZZZZZ	1652	1319	22938	10419	882
15:24	ZZZZZZ	1642	1305	23228	10614	867
15:28	ZZZZZZ	1625	1321	22888	10592	863
15:33	ZZZZZZ	1603	1292	22545	10472	855
15:37	ZZZZZZ	1664	1333	23277	10739	868
15:41	ZZZZZZ	1620	1298	22936	10592	864
15:46	MP19463-MB1	1817	1470	25473	11107	1035
15:50	MP19463-B1	1777	1456	24866	11015	1000
15:54	MA8504-CCV8	1779	1481	24915	10974	976
15:58	MA8504-CCB8	1843	1493	25998	11261	1049
16:02	F77889-38	1650	1326	23109	10743	894
16:06	MP19463-D1	1688	1337	23445	10685	905
16:11	MP19463-SD1	1815	1434	25214	11140	1016
16:15	MP19463-PS1	1646	1330	23031	10617	887

INTERNAL STANDARD SUMMARY

Login Number: F77897
Account: TETTNOAK - Tetra Tech, Inc
Project: Holloman AFB; Alamogordo, NM

File ID: SA111110M1.ICP Date Analyzed: 11/11/10 Methods: SW846 6010C
Analyst: RS Run ID: MA8504
Parameters: As,Ba,Cd,Cr,Pb,Se,Ag

Time	Sample Description	Istd#1	Istd#2	Istd#3	Istd#4	Istd#5
16:19	MP19463-S1	1665	1359	23265	10686	884
16:23	MP19463-S2	1671	1356	23359	10760	883
16:27	ZZZZZZ	1689	1350	23704	10729	934
16:31	ZZZZZZ	1664	1335	23357	10669	925
16:36	ZZZZZZ	1679	1347	23215	10536	918
16:40	ZZZZZZ	1674	1339	23376	10497	900
16:44	MA8504-CCV9	1776	1475	24839	11077	975
16:48	MA8504-CCB9	1853	1501	25803	11154	1046
17:07	MA8504-CCV10	1808	1511	24853	10891	986
17:12	MA8504-CCB10	1911	1529	26441	11180	1064
17:16	ZZZZZZ	1732	1386	24201	10888	961
17:20	ZZZZZZ	1603	1303	22361	10475	767
17:24	ZZZZZZ	1719	1359	23425	10491	911
17:29	ZZZZZZ	1743	1395	24222	10762	953
17:33	ZZZZZZ	1726	1394	24107	10694	961
17:37	ZZZZZZ	1678	1347	23485	10539	892
17:41	ZZZZZZ	1739	1387	24302	10826	951
17:45	F77897-39	1861	1472	25834	11042	1048
17:53	ZZZZZZ	1777	1390	24317	10588	996
17:58	MA8504-CCV11	1822	1508	25310	10927	994
18:01	MA8504-CCB11	1870	1540	26396	11082	1053
18:06	ZZZZZZ	1843	1482	25507	10964	1046
18:10	ZZZZZZ	1846	1473	25633	10843	1033
18:14	ZZZZZZ	1853	1481	25885	11022	1049
18:18	ZZZZZZ	1830	1474	25419	10929	1049
18:22	MP19456-MB1	1829	1456	24902	10546	1026
18:26	MP19456-B1	1797	1450	24409	10454	992
18:30	F77915-1	1859	1475	25661	10673	1033
18:34	MP19456-D1	1838	1468	25528	10724	1031
18:38	MP19456-SD1	1869	1521	25880	10913	1050
18:42	MP19456-PS1	1806	1453	24587	10563	1012
18:46	MA8504-CCV12	1859	1566	25490	10986	1007
18:50	MA8504-CCB12	1936	1566	26660	11045	1075

INTERNAL STANDARD SUMMARY

Login Number: F77897
Account: TETTNOAK - Tetra Tech, Inc
Project: Holloman AFB; Alamogordo, NM

File ID: SA111110M1.ICP Date Analyzed: 11/11/10 Methods: SW846 6010C
Analyst: RS Run ID: MA8504
Parameters: As,Ba,Cd,Cr,Pb,Se,Ag

Time	Sample Description	Istd#1	Istd#2	Istd#3	Istd#4	Istd#5
18:54	MP19456-S1	1787	1437	24314	10585	985
18:58	MP19456-S2	1773	1460	24115	10472	979
19:02	ZZZZZZ	1845	1484	25032	10820	1014
19:06	ZZZZZZ	1863	1475	25090	10633	1029
19:10	ZZZZZZ	1887	1486	25681	10943	1018
19:14	ZZZZZZ	1876	1519	25602	10935	1027
19:18	ZZZZZZ	1919	1521	25927	11213	1012
19:22	ZZZZZZ	1873	1510	25653	11041	1009
19:26	ZZZZZZ	1795	1498	24289	10943	911
19:31	ZZZZZZ	1485	1219	21031	9665	709
19:35	MA8504-CCV13	1759	1455	24876	11163	972
19:39	MA8504-CCB13	1837	1490	25944	11296	1050
19:43	ZZZZZZ	1402	1181	20546	10076	689
19:47	ZZZZZZ	1381	1139	20265	10148	659
19:52	ZZZZZZ	1401	1156	20367	10095	693
19:56	ZZZZZZ	2057	2061 !	29326	13941 !	856
20:00	ZZZZZZ	3014 !	2888 !	42501 !	19624 !	877
20:05	F77889-10	1776	1411	25417	11454	1030
20:09	MP19452-D1	1738	1315	23828	11205	1018
20:13	MP19452-S1	1690	1382	24484	11247	991
20:17	MP19452-S2	1703	1359	24222	11240	994
20:21	MP19452-PS1	1697	1367	24304	11218	997
20:25	MA8504-CCV14	1682	1410	23903	11162	954
20:29	MA8504-CCB14	1785	1447	25553	11339	1045
20:33	MP19452-SD1	1771	1418	24876	11255	1041
20:37	MP19472-MB1	1874	1491	26201	11461	1081
20:41	MP19472-B1	1849	1460	26075	11580	1079
20:45	F77965-1	1795	1438	25545	11713	1022
20:50	MP19472-D1	1772	1427	25245	11495	1008
20:54	MP19472-SD1	1791	1443	25388	11380	1045
20:58	MP19472-PS1	1756	1422	24946	11535	998
21:02	MP19472-S1	1765	1418	25001	11504	1006
21:06	MP19472-S2	1756	1412	24835	11469	1000

INTERNAL STANDARD SUMMARY

Login Number: F77897
Account: TETTNOAK - Tetra Tech, Inc
Project: Holloman AFB; Alamogordo, NM

File ID: SA111110M1.ICP Date Analyzed: 11/11/10 Methods: SW846 6010C
Analyst: RS Run ID: MA8504
Parameters: As,Ba,Cd,Cr,Pb,Se,Ag

Time	Sample Description	Istd#1	Istd#2	Istd#3	Istd#4	Istd#5
21:10	ZZZZZZ	1710	1378	24347	11191	1003
21:14	MA8504-CCV15	1670	1394	23766	11029	942
21:18	MA8504-CCB15	1801	1454	25402	11212	1039
21:22	ZZZZZZ	1740	1415	24897	11305	1035
21:26	ZZZZZZ	1712	1384	24549	11101	1016
21:30	ZZZZZZ	1722	1334	23476	11177	1007
21:34	ZZZZZZ	1702	1335	23543	11053	998
21:38	ZZZZZZ	1688	1340	24019	11160	985
21:43	ZZZZZZ	1779	1402	25409	11398	1048
21:47	ZZZZZZ	1740	1419	25145	11625	1005
21:51	ZZZZZZ	1697	1359	24297	11213	1011
21:55	ZZZZZZ	1670	1343	24185	11230	992
21:59	ZZZZZZ	1702	1393	24617	11364	1012
22:03	MA8504-CCV16	1696	1418	24013	11110	958
22:07	MA8504-CCB16	1812	1442	25633	11310	1046
22:11	ZZZZZZ	1774	1415	24969	11308	1044
22:16	ZZZZZZ	1883	1514	26692	12171	1034
22:20	ZZZZZZ	1780	1396	24955	11404	1033
22:24	MP19473-MB1	1775	1439	25066	11643	1037
22:28	MP19473-B1	1720	1407	24174	11124	985
22:32	F77970-2	1769	1432	24940	11245	1035
22:36	MP19473-D1	1781	1420	25121	11336	1042
22:40	MP19473-SD1	1806	1410	24685	10797	1044
22:44	MP19473-PS1	1751	1428	24828	11315	1015
22:48	MP19473-S1	1760	1425	24484	11105	987
22:52	MA8504-CCV17	1726	1408	24276	11152	957
22:56	MA8504-CCB17	1826	1454	25700	11338	1048
23:00	MP19473-S2	1700	1436	24789	11210	973
23:04	ZZZZZZ	1770	1418	25119	11305	1047
23:08	ZZZZZZ	1754	1402	24776	11261	1042
23:13	ZZZZZZ	1742	1430	25184	11273	1030
23:17	MA8504-CRIA3	1782	1412	24975	11238	1033
23:21	MA8504-ICSA2	1509	1426	21415	10547	817

INTERNAL STANDARD SUMMARY

Login Number: F77897
Account: TETTNOAK - Tetra Tech, Inc
Project: Holloman AFB; Alamogordo, NM

File ID: SA111110M1.ICP Date Analyzed: 11/11/10 Methods: SW846 6010C
Analyst: RS Run ID: MA8504
Parameters: As,Ba,Cd,Cr,Pb,Se,Ag

Time	Sample Description	Istd#1	Istd#2	Istd#3	Istd#4	Istd#5
23:25	MA8504-ICSAB2	1516	1415	21543	10567	818
23:29	MA8504-CCV18	1701	1435	24126	11062	953
23:33	MA8504-CCB18	1785	1435	25434	11257	1029

R = Reference for ISTD limits. ! = Outside limits.

LEGEND:

Istd#	Parameter	Limits
Istd#1	Yttrium (2243)	60-125 %
Istd#2	Yttrium (2422)	60-125 %
Istd#3	Yttrium (3242)	60-125 %
Istd#4	Yttrium (3710)	60-125 %
Istd#5	Indium	60-125 %

BLANK RESULTS SUMMARY
Part 1 - Initial and Continuing Calibration Blanks

Login Number: F77897
Account: TETTNOAK - Tetra Tech, Inc
Project: Holloman AFB; Alamogordo, NM

File ID: SA111110M1.ICP Date Analyzed: 11/11/10 Methods: SW846 6010C
QC Limits: result < RL Run ID: MA8504 Units: ug/l

Time:			08:40		09:15		10:48		11:36	
Sample ID:			ICB1		CCB1		CCB2		CCB3	
Metal	RL	IDL	raw	final	raw	final	raw	final	raw	final
Aluminum	200	20	anr							
Antimony	6.0	1	anr							
Arsenic	10	1	-0.10	<10	0.20	<10	0.40	<10	-0.40	<10
Barium	200	1	1.9	<200	1.8	<200	1.1	<200	0.50	<200
Beryllium	4.0	.1	anr							
Cadmium	5.0	.1	-0.10	<5.0	0.30	<5.0	0.30	<5.0	0.30	<5.0
Calcium	1000	50	anr							
Chromium	10	1	-0.50	<10	-0.10	<10	-0.30	<10	-0.10	<10
Cobalt	50	1	anr							
Copper	25	1	anr							
Iron	300	34	anr							
Lead	5.0	1	-1.2	<5.0	0.0	<5.0	-0.50	<5.0	-0.20	<5.0
Magnesium	5000	50	anr							
Manganese	15	1	anr							
Molybdenum	50	1								
Nickel	40	1	anr							
Potassium	10000	50	anr							
Selenium	10	2	-0.80	<10	-1.1	<10	1.7	<10	-1.1	<10
Silver	10	1	-0.20	<10	-0.50	<10	-0.20	<10	0.40	<10
Sodium	10000	750	anr							
Strontium	10	1								
Thallium	10	1	anr							
Tin	50	1								
Titanium	10	1.1								
Vanadium	50	1	anr							
Zinc	20	1	anr							

(*) Outside of QC limits
(anr) Analyte not requested

BLANK RESULTS SUMMARY
Part 1 - Initial and Continuing Calibration Blanks

Login Number: F77897
Account: TETTNOAK - Tetra Tech, Inc
Project: Holloman AFB; Alamogordo, NM

File ID: SA111110M1.ICP Date Analyzed: 11/11/10 Methods: SW846 6010C
QC Limits: result < RL Run ID: MA8504 Units: ug/l

Time:			12:25		13:16		14:13		15:07	
Sample ID:			CCB4		CCB5		CCB6		CCB7	
Metal	RL	IDL	raw	final	raw	final	raw	final	raw	final
Aluminum	200	20	anr							
Antimony	6.0	1	anr							
Arsenic	10	1	-0.10	<10	-0.90	<10	-0.20	<10	-1.1	<10
Barium	200	1	0.50	<200	-0.30	<200	-0.20	<200	-2.5	<200
Beryllium	4.0	.1	anr							
Cadmium	5.0	.1	0.30	<5.0	0.30	<5.0	0.20	<5.0	0.20	<5.0
Calcium	1000	50	anr							
Chromium	10	1	-0.10	<10	0.10	<10	-0.50	<10	0.20	<10
Cobalt	50	1	anr							
Copper	25	1	anr							
Iron	300	34	anr							
Lead	5.0	1	0.30	<5.0	0.10	<5.0	0.10	<5.0	-0.30	<5.0
Magnesium	5000	50	anr							
Manganese	15	1	anr							
Molybdenum	50	1								
Nickel	40	1	anr							
Potassium	10000	50	anr							
Selenium	10	2	1.0	<10	1.2	<10	0.30	<10	1.4	<10
Silver	10	1	-0.50	<10	-0.40	<10	-0.30	<10	-0.30	<10
Sodium	10000	750	anr							
Strontium	10	1								
Thallium	10	1	anr							
Tin	50	1								
Titanium	10	1.1								
Vanadium	50	1	anr							
Zinc	20	1	anr							

(*) Outside of QC limits
(anr) Analyte not requested

BLANK RESULTS SUMMARY
Part 1 - Initial and Continuing Calibration Blanks

Login Number: F77897
Account: TETTNOAK - Tetra Tech, Inc
Project: Holloman AFB; Alamogordo, NM

File ID: SA111110M1.ICP Date Analyzed: 11/11/10 Methods: SW846 6010C
QC Limits: result < RL Run ID: MA8504 Units: ug/l

Time:			15:58		16:48		17:12		18:01	
Sample ID:			CCB8		CCB9		CCB10		CCB11	
Metal	RL	IDL	raw	final	raw	final	raw	final	raw	final
Aluminum	200	20	anr							
Antimony	6.0	1	anr							
Arsenic	10	1	-1.5	<10	-1.5	<10	0.90	<10	-0.60	<10
Barium	200	1	-3.0	<200	-1.8	<200	-0.30	<200	0.70	<200
Beryllium	4.0	.1	anr							
Cadmium	5.0	.1	0.20	<5.0	0.30	<5.0	0.30	<5.0	0.20	<5.0
Calcium	1000	50	anr							
Chromium	10	1	-0.20	<10	0.20	<10	0.60	<10	0.20	<10
Cobalt	50	1	anr							
Copper	25	1	anr							
Iron	300	34	anr							
Lead	5.0	1	-0.90	<5.0	-0.90	<5.0	0.0	<5.0	-0.60	<5.0
Magnesium	5000	50	anr							
Manganese	15	1	anr							
Molybdenum	50	1								
Nickel	40	1	anr							
Potassium	10000	50	anr							
Selenium	10	2	2.1	<10	3.5	<10	0.90	<10	0.50	<10
Silver	10	1	-0.30	<10	-0.50	<10	-0.10	<10	0.40	<10
Sodium	10000	750	anr							
Strontium	10	1								
Thallium	10	1	anr							
Tin	50	1								
Titanium	10	1.1								
Vanadium	50	1	anr							
Zinc	20	1	anr							

(*) Outside of QC limits
(anr) Analyte not requested

BLANK RESULTS SUMMARY
Part 1 - Initial and Continuing Calibration Blanks

Login Number: F77897
Account: TETTNOAK - Tetra Tech, Inc
Project: Holloman AFB; Alamogordo, NM

File ID: SA111110M1.ICP Date Analyzed: 11/11/10 Methods: SW846 6010C
QC Limits: result < RL Run ID: MA8504 Units: ug/l

Time:			18:50		19:39		20:29		21:18	
Sample ID:			CCB12		CCB13		CCB14		CCB15	
Metal	RL	IDL	raw	final	raw	final	raw	final	raw	final
Aluminum	200	20	anr							
Antimony	6.0	1	anr							
Arsenic	10	1	1.4	<10	1.6	<10	1.3	<10	0.60	<10
Barium	200	1	0.70	<200	-0.80	<200	-2.3	<200	-1.9	<200
Beryllium	4.0	.1	anr							
Cadmium	5.0	.1	0.30	<5.0	0.30	<5.0	0.20	<5.0	0.20	<5.0
Calcium	1000	50	anr							
Chromium	10	1	0.40	<10	0.0	<10	0.0	<10	0.0	<10
Cobalt	50	1	anr							
Copper	25	1	anr							
Iron	300	34	anr							
Lead	5.0	1	0.0	<5.0	-0.20	<5.0	-0.50	<5.0	0.30	<5.0
Magnesium	5000	50	anr							
Manganese	15	1	anr							
Molybdenum	50	1								
Nickel	40	1	anr							
Potassium	10000	50	anr							
Selenium	10	2	0.50	<10	1.2	<10	1.2	<10	2.3	<10
Silver	10	1	0.20	<10	0.0	<10	-0.20	<10	-0.40	<10
Sodium	10000	750	anr							
Strontium	10	1								
Thallium	10	1	anr							
Tin	50	1								
Titanium	10	1.1								
Vanadium	50	1	anr							
Zinc	20	1	anr							

(*) Outside of QC limits
(anr) Analyte not requested

BLANK RESULTS SUMMARY
Part 1 - Initial and Continuing Calibration Blanks

Login Number: F77897
Account: TETTNOAK - Tetra Tech, Inc
Project: Holloman AFB; Alamogordo, NM

File ID: SA111110M1.ICP Date Analyzed: 11/11/10 Methods: SW846 6010C
QC Limits: result < RL Run ID: MA8504 Units: ug/l

Time:			22:07		22:56		23:33	
Sample ID:			CCB16		CCB17		CCB18	
Metal	RL	IDL	raw	final	raw	final	raw	final
Aluminum	200	20	anr					
Antimony	6.0	1	anr					
Arsenic	10	1	0.80	<10	1.3	<10	-0.20	<10
Barium	200	1	-2.9	<200	-4.0	<200	-2.7	<200
Beryllium	4.0	.1	anr					
Cadmium	5.0	.1	0.30	<5.0	0.20	<5.0	0.30	<5.0
Calcium	1000	50	anr					
Chromium	10	1	0.10	<10	0.10	<10	0.20	<10
Cobalt	50	1	anr					
Copper	25	1	anr					
Iron	300	34	anr					
Lead	5.0	1	-1.0	<5.0	-1.3	<5.0	0.0	<5.0
Magnesium	5000	50	anr					
Manganese	15	1	anr					
Molybdenum	50	1						
Nickel	40	1	anr					
Potassium	10000	50	anr					
Selenium	10	2	-0.60	<10	2.6	<10	2.4	<10
Silver	10	1	-0.20	<10	-0.10	<10	-0.30	<10
Sodium	10000	750	anr					
Strontium	10	1						
Thallium	10	1	anr					
Tin	50	1						
Titanium	10	1.1						
Vanadium	50	1	anr					
Zinc	20	1	anr					

(*) Outside of QC limits
(anr) Analyte not requested

CALIBRATION CHECK STANDARDS SUMMARY
Initial and Continuing Calibration Checks

Login Number: F77897
Account: TETTNOAK - Tetra Tech, Inc
Project: Holloman AFB; Alamogordo, NM

File ID: SA111110M1.ICP Date Analyzed: 11/11/10 Methods: SW846 6010C
QC Limits: 90 to 110 % Recovery Run ID: MA8504 Units: ug/l

Time:		08:34			09:07			10:44	
Sample ID:	ICV	ICV1		CCV	CCV1		CCV	CCV2	
Metal	True	Results	% Rec	True	Results	% Rec	True	Results	% Rec
Aluminum	anr								
Antimony	anr								
Arsenic	2000	2000	100.0	2000	2020	101.0	2000	2010	100.5
Barium	2000	2050	102.5	2000	2100	105.0	2000	2050	102.5
Beryllium	anr								
Cadmium	2000	2060	103.0	2000	2050	102.5	2000	2030	101.5
Calcium	anr								
Chromium	2000	2050	102.5	2000	2100	105.0	2000	2090	104.5
Cobalt	anr								
Copper	anr								
Iron	anr								
Lead	2000	2020	101.0	2000	2020	101.0	2000	2010	100.5
Magnesium	anr								
Manganese	anr								
Molybdenum									
Nickel	anr								
Potassium	anr								
Selenium	2000	2040	102.0	2000	2030	101.5	2000	2010	100.5
Silver	250	245	98.0	250	259	103.6	250	256	102.4
Sodium	anr								
Strontium									
Thallium	anr								
Tin									
Titanium									
Vanadium	anr								
Zinc	anr								

(*) Outside of QC limits
(anr) Analyte not requested

CALIBRATION CHECK STANDARDS SUMMARY
Initial and Continuing Calibration Checks

Login Number: F77897
Account: TETTNOAK - Tetra Tech, Inc
Project: Holloman AFB; Alamogordo, NM

File ID: SA111110M1.ICP Date Analyzed: 11/11/10 Methods: SW846 6010C
QC Limits: 90 to 110 % Recovery Run ID: MA8504 Units: ug/l

Time:		11:32			12:21			13:12	
Sample ID:	CCV	CCV3		CCV	CCV4		CCV	CCV5	
Metal	True	Results	% Rec	True	Results	% Rec	True	Results	% Rec
Aluminum	anr								
Antimony	anr								
Arsenic	2000	2020	101.0	2000	2080	104.0	2000	2040	102.0
Barium	2000	2050	102.5	2000	2100	105.0	2000	2050	102.5
Beryllium	anr								
Cadmium	2000	2050	102.5	2000	2100	105.0	2000	2060	103.0
Calcium	anr								
Chromium	2000	2070	103.5	2000	2130	106.5	2000	2100	105.0
Cobalt	anr								
Copper	anr								
Iron	anr								
Lead	2000	2000	100.0	2000	2050	102.5	2000	2010	100.5
Magnesium	anr								
Manganese	anr								
Molybdenum									
Nickel	anr								
Potassium	anr								
Selenium	2000	2020	101.0	2000	2070	103.5	2000	2050	102.5
Silver	250	253	101.2	250	257	102.8	250	253	101.2
Sodium	anr								
Strontium									
Thallium	anr								
Tin									
Titanium									
Vanadium	anr								
Zinc	anr								

(*) Outside of QC limits
(anr) Analyte not requested

CALIBRATION CHECK STANDARDS SUMMARY
Initial and Continuing Calibration Checks

Login Number: F77897
Account: TETTNOAK - Tetra Tech, Inc
Project: Holloman AFB; Alamogordo, NM

File ID: SA111110M1.ICP Date Analyzed: 11/11/10 Methods: SW846 6010C
QC Limits: 90 to 110 % Recovery Run ID: MA8504 Units: ug/l

Time:		14:09			15:03			15:54	
Sample ID:	CCV	CCV6		CCV	CCV7		CCV	CCV8	
Metal	True	Results	% Rec	True	Results	% Rec	True	Results	% Rec
Aluminum	anr								
Antimony	anr								
Arsenic	2000	2080	104.0	2000	2140	107.0	2000	2110	105.5
Barium	2000	2050	102.5	2000	2150	107.5	2000	2110	105.5
Beryllium	anr								
Cadmium	2000	2070	103.5	2000	2100	105.0	2000	2080	104.0
Calcium	anr								
Chromium	2000	2130	106.5	2000	2140	107.0	2000	2170	108.5
Cobalt	anr								
Copper	anr								
Iron	anr								
Lead	2000	1980	99.0	2000	1980	99.0	2000	1960	98.0
Magnesium	anr								
Manganese	anr								
Molybdenum									
Nickel	anr								
Potassium	anr								
Selenium	2000	2100	105.0	2000	2190	109.5	2000	2150	107.5
Silver	250	249	99.6	250	254	101.6	250	254	101.6
Sodium	anr								
Strontium									
Thallium	anr								
Tin									
Titanium									
Vanadium	anr								
Zinc	anr								

(*) Outside of QC limits
(anr) Analyte not requested

CALIBRATION CHECK STANDARDS SUMMARY
Initial and Continuing Calibration Checks

Login Number: F77897
Account: TETTNOAK - Tetra Tech, Inc
Project: Holloman AFB; Alamogordo, NM

File ID: SA111110M1.ICP Date Analyzed: 11/11/10 Methods: SW846 6010C
QC Limits: 90 to 110 % Recovery Run ID: MA8504 Units: ug/l

Time:		16:44			17:07			17:58	
Sample ID:	CCV	CCV9		CCV	CCV10		CCV	CCV11	
Metal	True	Results	% Rec	True	Results	% Rec	True	Results	% Rec
Aluminum	anr								
Antimony	anr								
Arsenic	2000	2120	106.0	2000	1950	97.5	2000	1950	97.5
Barium	2000	2110	105.5	2000	2020	101.0	2000	2000	100.0
Beryllium	anr								
Cadmium	2000	2070	103.5	2000	2020	101.0	2000	2020	101.0
Calcium	anr								
Chromium	2000	2160	108.0	2000	2050	102.5	2000	2060	103.0
Cobalt	anr								
Copper	anr								
Iron	anr								
Lead	2000	1950	97.5	2000	2000	100.0	2000	1990	99.5
Magnesium	anr								
Manganese	anr								
Molybdenum									
Nickel	anr								
Potassium	anr								
Selenium	2000	2170	108.5	2000	1980	99.0	2000	1980	99.0
Silver	250	253	101.2	250	244	97.6	250	243	97.2
Sodium	anr								
Strontium									
Thallium	anr								
Tin									
Titanium									
Vanadium	anr								
Zinc	anr								

(*) Outside of QC limits
(anr) Analyte not requested

CALIBRATION CHECK STANDARDS SUMMARY
Initial and Continuing Calibration Checks

Login Number: F77897
Account: TETTNOAK - Tetra Tech, Inc
Project: Holloman AFB; Alamogordo, NM

File ID: SA111110M1.ICP Date Analyzed: 11/11/10 Methods: SW846 6010C
QC Limits: 90 to 110 % Recovery Run ID: MA8504 Units: ug/l

Time:		18:46			19:35			20:25	
Sample ID:	CCV	CCV12		CCV	CCV13		CCV	CCV14	
Metal	True	Results	% Rec	True	Results	% Rec	True	Results	% Rec
Aluminum	anr								
Antimony	anr								
Arsenic	2000	1940	97.0	2000	2010	100.5	2000	2040	102.0
Barium	2000	1980	99.0	2000	2080	104.0	2000	2090	104.5
Beryllium	anr								
Cadmium	2000	2010	100.5	2000	2040	102.0	2000	2010	100.5
Calcium	anr								
Chromium	2000	2020	101.0	2000	2100	105.0	2000	2040	102.0
Cobalt	anr								
Copper	anr								
Iron	anr								
Lead	2000	2000	100.0	2000	2010	100.5	2000	1960	98.0
Magnesium	anr								
Manganese	anr								
Molybdenum									
Nickel	anr								
Potassium	anr								
Selenium	2000	1960	98.0	2000	2050	102.5	2000	2090	104.5
Silver	250	243	97.2	250	253	101.2	250	254	101.6
Sodium	anr								
Strontium									
Thallium	anr								
Tin									
Titanium									
Vanadium	anr								
Zinc	anr								

(*) Outside of QC limits
(anr) Analyte not requested

CALIBRATION CHECK STANDARDS SUMMARY
Initial and Continuing Calibration Checks

Login Number: F77897
Account: TETTNOAK - Tetra Tech, Inc
Project: Holloman AFB; Alamogordo, NM

File ID: SA111110M1.ICP Date Analyzed: 11/11/10 Methods: SW846 6010C
QC Limits: 90 to 110 % Recovery Run ID: MA8504 Units: ug/l

Time:		21:14			22:03			22:52	
Sample ID:	CCV	CCV15		CCV	CCV16		CCV	CCV17	
Metal	True	Results	% Rec	True	Results	% Rec	True	Results	% Rec
Aluminum	anr								
Antimony	anr								
Arsenic	2000	2020	101.0	2000	2000	100.0	2000	1960	98.0
Barium	2000	2100	105.0	2000	2070	103.5	2000	2070	103.5
Beryllium	anr								
Cadmium	2000	1990	99.5	2000	1980	99.0	2000	1950	97.5
Calcium	anr								
Chromium	2000	2030	101.5	2000	2010	100.5	2000	2020	101.0
Cobalt	anr								
Copper	anr								
Iron	anr								
Lead	2000	1950	97.5	2000	1940	97.0	2000	1950	97.5
Magnesium	anr								
Manganese	anr								
Molybdenum									
Nickel	anr								
Potassium	anr								
Selenium	2000	2080	104.0	2000	2050	102.5	2000	2010	100.5
Silver	250	253	101.2	250	250	100.0	250	256	102.4
Sodium	anr								
Strontium									
Thallium	anr								
Tin									
Titanium									
Vanadium	anr								
Zinc	anr								

(*) Outside of QC limits
(anr) Analyte not requested

CALIBRATION CHECK STANDARDS SUMMARY
Initial and Continuing Calibration Checks

Login Number: F77897
Account: TETTNOAK - Tetra Tech, Inc
Project: Holloman AFB; Alamogordo, NM

File ID: SA111110M1.ICP Date Analyzed: 11/11/10 Methods: SW846 6010C
QC Limits: 90 to 110 % Recovery Run ID: MA8504 Units: ug/l

Time:		23:29	
Sample ID:	CCV	CCV18	
Metal	True	Results	% Rec
Aluminum	anr		
Antimony	anr		
Arsenic	2000	2010	100.5
Barium	2000	2090	104.5
Beryllium	anr		
Cadmium	2000	1980	99.0
Calcium	anr		
Chromium	2000	2000	100.0
Cobalt	anr		
Copper	anr		
Iron	anr		
Lead	2000	1960	98.0
Magnesium	anr		
Manganese	anr		
Molybdenum			
Nickel	anr		
Potassium	anr		
Selenium	2000	2060	103.0
Silver	250	254	101.6
Sodium	anr		
Strontium			
Thallium	anr		
Tin			
Titanium			
Vanadium	anr		
Zinc	anr		

(*) Outside of QC limits
(anr) Analyte not requested

HIGH STANDARD CHECK SUMMARY

Login Number: F77897
Account: TETTNOAK - Tetra Tech, Inc
Project: Holloman AFB; Alamogordo, NM

File ID: SA111110M1.ICP Date Analyzed: 11/11/10 Methods: SW846 6010C
QC Limits: 95 to 105 % Recovery Run ID: MA8504 Units: ug/l

Time:		08:30	
Sample ID:	HSTD	HSTD1	
Metal	True	Results	% Rec
Aluminum	anr		
Antimony	anr		
Arsenic	4000	4040	101.0
Barium	4000	3980	99.5
Beryllium	anr		
Cadmium	4000	4010	100.3
Calcium	anr		
Chromium	4000	3980	99.5
Cobalt	anr		
Copper	anr		
Iron	anr		
Lead	4000	4030	100.8
Magnesium	anr		
Manganese	anr		
Molybdenum			
Nickel	anr		
Potassium	anr		
Selenium	4000	4040	101.0
Silver	500	499	99.8
Sodium	anr		
Strontium			
Thallium	anr		
Tin			
Titanium			
Vanadium	anr		
Zinc	anr		

(*) Outside of QC limits
(anr) Analyte not requested

LOW CALIBRATION CHECK STANDARDS SUMMARY

Login Number: F77897
Account: TETTNOAK - Tetra Tech, Inc
Project: Holloman AFB; Alamogordo, NM

File ID: SA111110M1.ICP Date Analyzed: 11/11/10 Methods: SW846 6010C
QC Limits: CRI 70-130% CRIA 70-130% Run ID: MA8504 Units: ug/l

Time:			08:44		08:48		23:17	
Sample ID:	CRI	CRIA	CRIA1		CRIA2		CRIA3	
Metal	True	True	Results	% Rec	Results	% Rec	Results	% Rec
Aluminum	400	200	anr					
Antimony	10	5.0	anr					
Arsenic	20	10	8.8	88.0			10.1	101.0
Barium	400	200	205	102.5			207	103.5
Beryllium	10	5.0	anr					
Cadmium	10	5.0	5.1	102.0			4.8	96.0
Calcium	2000	1000	anr					
Chromium	20	10	10.0	100.0			10.5	105.0
Cobalt	100	50	anr					
Copper	50	25	anr					
Iron	600	300	anr					
Lead	10	5.0	4.6	92.0			3.8	76.0
Magnesium	10000	5000	anr					
Manganese	30	15	anr					
Molybdenum	100	50						
Nickel	80	40	anr					
Potassium	20000	10000	anr					
Selenium	20	10			9.2	92.0	10.9	109.0
Silver	20	10	8.7	87.0			8.8	88.0
Sodium	20000	10000	anr					
Strontium	20	10						
Thallium	20	10	anr					
Tin	100	50						
Titanium	20	10						
Vanadium	100	50	anr					
Zinc	40	20	anr					

(*) Outside of QC limits
(anr) Analyte not requested

INTERFERING ELEMENT CHECK STANDARDS SUMMARY
Part 1 - ICSA and ICSAB Standards

Login Number: F77897
Account: TETTNOAK - Tetra Tech, Inc
Project: Holloman AFB; Alamogordo, NM

File ID: SA111110M1.ICP Date Analyzed: 11/11/10 Methods: SW846 6010C
QC Limits: 80 to 120 % Recovery Run ID: MA8504 Units: ug/l

Time:			08:56		09:02		23:21		23:25	
Sample ID:	ICSA	ICSAB	ICSA1		ICSAB1		ICSA2		ICSAB2	
Metal	True	True	Results	% Rec	Results	% Rec	Results	% Rec	Results	% Rec
Aluminum	500000	500000	523000	104.6	517000	103.4	493000	98.6	489000	97.8
Antimony		1000	0.0		1060	106.0	0.0		1060	106.0
Arsenic		1000	-0.40		1050	105.0	-1.4		1040	104.0
Barium		500	4.5		534	106.8	-1.3		524	104.8
Beryllium		500	-0.20		509	101.8	-0.10		479	95.8
Cadmium		1000	0.0		983	98.3	4.7		942	94.2
Calcium	500000	500000	472000	94.4	481000	96.2	433000	86.6	437000	87.4
Chromium		500	-0.90		435	87.0	-0.70		424	84.8
Cobalt		500	0.20		499	99.8	0.50		469	93.8
Copper		500	0.0		530	106.0	1.3		556	111.2
Iron	200000	200000	191000	95.5	191000	95.5	179000	89.5	179000	89.5
Lead		1000	0.40		1020	102.0	8.0		976	97.6
Magnesium	500000	500000	525000	105.0	537000	107.4	487000	97.4	495000	99.0
Manganese		500	0.10		442	88.4	0.40		446	89.2
Molybdenum		1000	0.30		1000	100.0	0.20		964	96.4
Nickel		1000	0.0		997	99.7	1.5		954	95.4
Potassium			-6.8		-9.0		-10		-29	
Selenium		1000	0.0		1040	104.0	0.20		1030	103.0
Silver		1000	0.40		1120	112.0	0.20		1150	115.0
Sodium			349		-530		-550		-1000	
Strontium		1000	-6.0		-6.1	0.0*	-5.0		-5.0	0.0*
Thallium		1000	0.0		985	98.5	-2.4		956	95.6
Tin		1000	2.7		956	95.6	2.5		915	91.5
Titanium		1000	5.0		5.1	0.5*	4.3		5.0	0.5*
Vanadium		500	-0.20		452	90.4	-0.10		455	91.0
Zinc		1000	-4.9		921	92.1	-4.8		854	85.4

(*) Outside of QC limits
(anr) Analyte not requested

Accutest Laboratories Instrument Runlog
Inorganics Analyses

Login Number: F77897
Account: TETTNOAK - Tetra Tech, Inc
Project: Holloman AFB; Alamogordo, NM

File ID: H21112S3.PRN Date Analyzed: 11/12/10 Methods: SW846 7471B
Analyst: LM Run ID: MA8506
Parameters: Hg

Time	Sample Description	Dilution Factor	PS Recov	Comments
09:55	MA8506-STD1	1		STD02REP1
09:57	MA8506-STD2	1		STD03REP1
09:59	MA8506-STD3	1		STD04REP1
10:01	MA8506-STD4	1		STD05REP1
10:04	MA8506-STD5	1		STD06REP1
10:10	MA8506-STD6	1		STD01REP1
10:12	MA8506-HSTD1	1		
10:14	MA8506-ICV1	1		
10:16	MA8506-ICB1	1		
10:19	MA8506-CRI1	1		
10:25	MA8506-CCV1	1		
10:27	MA8506-CCB1	1		
11:15	MA8506-CCV2	1		
11:18	MA8506-CCB2	1		
11:20	MP19469-MB1	1		
11:22	MP19469-B1	1		
11:25	F77964-10	1		(sample used for QC only; not part of login F77897)
11:27	MP19469-D1	1		
11:29	MP19469-SD1	5		
11:31	MP19469-S1	1		
11:33	MP19469-S2	1		
11:36	ZZZZZZ	1		
11:38	ZZZZZZ	1		
11:40	ZZZZZZ	1		
11:42	MA8506-CCV3	1		
11:45	MA8506-CCB3	1		
11:47	ZZZZZZ	1		
11:49	ZZZZZZ	1		
11:52	ZZZZZZ	1		
11:54	ZZZZZZ	1		
11:57	ZZZZZZ	1		
11:59	ZZZZZZ	1		
12:02	ZZZZZZ	1		

Accutest Laboratories Instrument Runlog
Inorganics Analyses

Login Number: F77897
Account: TETTNOAK - Tetra Tech, Inc
Project: Holloman AFB; Alamogordo, NM

File ID: H21112S3.PRN Date Analyzed: 11/12/10 Methods: SW846 7471B
Analyst: LM Run ID: MA8506
Parameters: Hg

Time	Sample Description	Dilution Factor	PS Recov	Comments
12:04	ZZZZZZ	1		
12:06	ZZZZZZ	1		
12:09	ZZZZZZ	1		
12:11	MA8506-CCV4	1		
12:13	MA8506-CCB4	1		
12:16	ZZZZZZ	1		
12:18	F77897-21	1		
12:20	F77897-22	1		
12:22	F77897-23	1		
12:24	MP19470-MB1	1		
12:27	MP19470-B1	1		
12:29	F77897-24	1		
12:31	MP19470-D1	1		
12:33	MP19470-SD1	5		
12:36	MP19470-S1	1		
12:38	MA8506-CCV5	1		
12:40	MA8506-CCB5	1		
12:42	MP19470-S2	1		
12:45	F77897-25	1		
12:47	F77897-26	1		
12:49	F77897-27	1		
12:52	F77897-28	1		
12:54	F77897-29	1		
12:56	F77897-30	1		
12:58	F77897-31	1		
13:01	F77897-32	1		
13:03	F77897-33	1		
---------->	Last reportable sample/prep for job F77897			
13:05	MA8506-CCV6	1		
13:07	MA8506-CCB6	1		
13:19	MA8506-CRI2	1		
13:21	MA8506-CCV7	1		
13:24	MA8506-CCB7	1		
---------->	Last reportable CCB for job F77897			

Refer to raw data for calibration curve and standards.

BLANK RESULTS SUMMARY
Part 1 - Initial and Continuing Calibration Blanks

Login Number: F77897
Account: TETTNOAK - Tetra Tech, Inc
Project: Holloman AFB; Alamogordo, NM

File ID: H21112S3.PRN Date Analyzed: 11/12/10 Methods: SW846 7471B
QC Limits: result < RL Run ID: MA8506 Units: ug/l

Time:			10:16		10:27		11:18		11:45	
Sample ID:			ICB1		CCB1		CCB2		CCB3	
Metal	RL	IDL	raw	final	raw	final	raw	final	raw	final
Mercury	1.0	.071	-0.053	<1.0	0.031	<1.0	0.16	<1.0	-0.056	<1.0

(*) Outside of QC limits
(anr) Analyte not requested

BLANK RESULTS SUMMARY
Part 1 - Initial and Continuing Calibration Blanks

Login Number: F77897
Account: TETTNOAK - Tetra Tech, Inc
Project: Holloman AFB; Alamogordo, NM

File ID: H21112S3.PRN Date Analyzed: 11/12/10 Methods: SW846 7471B
QC Limits: result < RL Run ID: MA8506 Units: ug/l

Time:			12:13		12:40		13:07		13:24	
Sample ID:			CCB4		CCB5		CCB6		CCB7	
Metal	RL	IDL	raw	final	raw	final	raw	final	raw	final
Mercury	1.0	.071	-0.087	<1.0	-0.037	<1.0	0.045	<1.0	0.062	<1.0

(*) Outside of QC limits
(anr) Analyte not requested

CALIBRATION CHECK STANDARDS SUMMARY
Initial and Continuing Calibration Checks

Login Number: F77897
Account: TETTNOAK - Tetra Tech, Inc
Project: Holloman AFB; Alamogordo, NM

File ID: H21112S3.PRN Date Analyzed: 11/12/10 Methods: SW846 7471B
QC Limits: 90 to 110 % Recovery Run ID: MA8506 Units: ug/l

Time:		10:14			10:25			11:15	
Sample ID:	ICV	ICV1		CCV	CCV1		CCV	CCV2	
Metal	True	Results	% Rec	True	Results	% Rec	True	Results	% Rec
Mercury	3	2.7	90.0	3	3.2	106.7	3.0	3.0	100.0

(*) Outside of QC limits
(anr) Analyte not requested

CALIBRATION CHECK STANDARDS SUMMARY
Initial and Continuing Calibration Checks

Login Number: F77897
Account: TETTNOAK - Tetra Tech, Inc
Project: Holloman AFB; Alamogordo, NM

File ID: H21112S3.PRN Date Analyzed: 11/12/10 Methods: SW846 7471B
QC Limits: 90 to 110 % Recovery Run ID: MA8506 Units: ug/l

Time:		11:42			12:11			12:38	
Sample ID:	CCV	CCV3		CCV	CCV4		CCV	CCV5	
Metal	True	Results	% Rec	True	Results	% Rec	True	Results	% Rec
Mercury	3.0	3.0	100.0	3	3.1	103.3	3.0	3.0	100.0

(*) Outside of QC limits
(anr) Analyte not requested

CALIBRATION CHECK STANDARDS SUMMARY
Initial and Continuing Calibration Checks

Login Number: F77897
Account: TETTNOAK - Tetra Tech, Inc
Project: Holloman AFB; Alamogordo, NM

File ID: H21112S3.PRN Date Analyzed: 11/12/10 Methods: SW846 7471B
QC Limits: 90 to 110 % Recovery Run ID: MA8506 Units: ug/l

Time:		13:05			13:21	
Sample ID:	CCV	CCV6		CCV	CCV7	
Metal	True	Results	% Rec	True	Results	% Rec
Mercury	3	3.2	106.7	3	3.1	103.3

(*) Outside of QC limits
(anr) Analyte not requested

9.4.2
9

HIGH STANDARD CHECK SUMMARY

Login Number: F77897
Account: TETTNOAK - Tetra Tech, Inc
Project: Holloman AFB; Alamogordo, NM

File ID: H21112S3.PRN Date Analyzed: 11/12/10 Methods: SW846 7471B
QC Limits: 95 to 105 % Recovery Run ID: MA8506 Units: ug/l

Time:		10:12	
Sample ID:	HSTD	HSTD1	
Metal	True	Results	% Rec
Mercury	6	5.8	96.7

(*) Outside of QC limits
(anr) Analyte not requested

9.4.3

9

LOW CALIBRATION CHECK STANDARDS SUMMARY

Login Number: F77897
Account: TETTNOAK - Tetra Tech, Inc
Project: Holloman AFB; Alamogordo, NM

File ID: H21112S3.PRN Date Analyzed: 11/12/10 Methods: SW846 7471B
QC Limits: 80 to 120 % Recovery Run ID: MA8506 Units: ug/l

Time:			10:19		13:19	
Sample ID:	CRI	CRIA	CRI1		CRI2	
Metal	True	True	Results	% Rec	Results	% Rec
Mercury	0.20		0.17	85.0	0.17	85.0

(*) Outside of QC limits
(anr) Analyte not requested

Accutest Laboratories Instrument Runlog
Inorganics Analyses

Login Number: F77897
Account: TETTNOAK - Tetra Tech, Inc
Project: Holloman AFB; Alamogordo, NM

File ID: SA111210M1.ICP Date Analyzed: 11/12/10 Methods: SW846 6010C
Analyst: RS Run ID: MA8509
Parameters: Pb

Time	Sample Description	Dilution Factor	PS Recov	Comments
09:40	MA8509-STD1	1		STDA
09:44	MA8509-STD2	1		STDB
09:47	MA8509-STD3	1		STDC
09:53	MA8509-HSTD1	1		
09:57	MA8509-ICV1	1		
10:04	MA8509-ICB1	1		
10:09	MA8509-CRIA1	1		
10:18	MA8509-ICSA1	1		
10:24	MA8509-ICSAB1	1		
10:34	MA8509-CCV1	1		
10:44	MA8509-CCB1	1		
11:12	MP19452-D1	1		
11:16	F77889-38	5		(sample used for QC only; not part of login F77897)
11:20	MP19463-D1	5		
11:24	MP19463-S1	5		
11:28	MP19463-S2	5		
11:32	MP19463-PS1	5		
11:37	MP19463-SD1	25		
11:41	ZZZZZZ	5		
11:45	ZZZZZZ	10		
11:49	MA8509-CCV2	1		
11:53	MA8509-CCB2	1		
11:57	ZZZZZZ	10		
12:01	ZZZZZZ	10		
12:06	ZZZZZZ	10		
12:18	ZZZZZZ	5		
12:22	MP19467-MB1	1		
12:26	MP19467-B1	1		
12:34	MP19467-D1	1		
12:38	MP19467-SD1	5		
12:43	MP19467-PS1	1		
12:47	MA8509-CCV3	1		
12:51	MA8509-CCB3	1		

Accutest Laboratories Instrument Runlog
Inorganics Analyses

Login Number: F77897
Account: TETTNOAK - Tetra Tech, Inc
Project: Holloman AFB; Alamogordo, NM

File ID: SA111210M1.ICP Date Analyzed: 11/12/10 Methods: SW846 6010C
Analyst: RS Run ID: MA8509
Parameters: Pb

Time	Sample Description	Dilution Factor	PS Recov	Comments
12:55	MP19467-S1	1		
12:59	MP19467-S2	1		
13:07	ZZZZZZ	1		
13:15	ZZZZZZ	1		
13:28	ZZZZZZ	1		
13:36	MA8509-CCV4	1		
13:40	MA8509-CCB4	1		
13:44	ZZZZZZ	1		
14:05	ZZZZZZ	1		
14:18	ZZZZZZ	1		
14:21	ZZZZZZ	1		
14:26	MA8509-CCV5	1		
14:29	MA8509-CCB5	1		
14:34	ZZZZZZ	1		
14:38	MP19466-MB1	1		
14:42	MP19466-B1	1		
14:46	F77964-10	1		(sample used for QC only; not part of login F77897)
14:50	MP19466-D1	1		
14:54	MP19466-SD1	5		
14:58	MP19466-PS1	1		
15:02	MP19466-S1	1		
15:06	MP19466-S2	1		
15:10	ZZZZZZ	1		
15:14	MA8509-CCV6	1		
15:18	MA8509-CCB6	1		
15:22	ZZZZZZ	1		
15:27	ZZZZZZ	1		
15:30	ZZZZZZ	1		
15:35	ZZZZZZ	1		
15:39	ZZZZZZ	1		
15:43	ZZZZZZ	1		
15:47	ZZZZZZ	1		
15:51	ZZZZZZ	1		

Accutest Laboratories Instrument Runlog
Inorganics Analyses

Login Number: F77897
Account: TETTNOAK - Tetra Tech, Inc
Project: Holloman AFB; Alamogordo, NM

File ID: SA111210M1.ICP Date Analyzed: 11/12/10 Methods: SW846 6010C
Analyst: RS Run ID: MA8509
Parameters: Pb

Time	Sample Description	Dilution Factor	PS Recov	Comments
15:55	ZZZZZZ	1		
15:59	ZZZZZZ	1		
16:03	MA8509-CCV7	1		
16:07	MA8509-CCB7	1		
16:23	MA8509-CCV8	1		
16:31	MA8509-CCB8	1		
16:34	ZZZZZZ	1		
16:38	ZZZZZZ	1		
16:43	ZZZZZZ	1		
16:46	ZZZZZZ	1		
16:51	ZZZZZZ	1		
16:55	ZZZZZZ	1		
16:59	ZZZZZZ	1		
17:03	ZZZZZZ	1		
17:07	MP19471-MB1	1		
17:11	MP19471-B1	1		
17:15	MA8509-CCV9	1		
17:19	MA8509-CCB9	1		
17:23	F75925-4T	1		(sample used for QC only; not part of login F77897)
17:27	MP19471-D1	1		
17:31	MP19471-SD1	5		
17:35	MP19471-PS1	1		
17:40	MP19471-S1	1		
17:44	MP19471-S2	1		
17:48	ZZZZZZ	1		
17:52	ZZZZZZ	1		
17:56	ZZZZZZ	1		
18:00	ZZZZZZ	1		
18:04	MA8509-CCV10	1		
18:08	MA8509-CCB10	1		
18:12	ZZZZZZ	1		
18:16	ZZZZZZ	1		
18:20	ZZZZZZ	1		

Accutest Laboratories Instrument Runlog
Inorganics Analyses

Login Number: F77897
Account: TETTNOAK - Tetra Tech, Inc
Project: Holloman AFB; Alamogordo, NM

File ID: SA111210M1.ICP Date Analyzed: 11/12/10 Methods: SW846 6010C
Analyst: RS Run ID: MA8509
Parameters: Pb

Time	Sample Description	Dilution Factor	PS Recov	Comments
18:24	ZZZZZZ	1		
18:37	ZZZZZZ	1		
18:49	ZZZZZZ	1		
18:53	MA8509-CCV11	1		
18:57	MA8509-CCB11	1		
19:01	ZZZZZZ	1		
19:06	ZZZZZZ	1		
19:10	ZZZZZZ	1		
19:18	MP19475-MB1	1		
19:22	MP19475-B1	1		
19:26	F77972-1	1		(sample used for QC only; not part of login F77897)
19:30	MP19475-D1	1		
19:34	MP19475-SD1	5		
19:38	MP19475-PS1	1		
19:42	MA8509-CCV12	1		
19:46	MA8509-CCB12	1		
19:50	MP19475-S1	1		
19:54	MP19475-S2	1		
19:58	ZZZZZZ	1		
20:02	ZZZZZZ	1		
20:06	ZZZZZZ	1		
20:11	ZZZZZZ	1		
20:15	ZZZZZZ	1		
20:19	ZZZZZZ	1		
20:23	ZZZZZZ	1		
20:27	ZZZZZZ	1		
20:31	MA8509-CCV13	1		
20:35	MA8509-CCB13	1		
20:39	ZZZZZZ	1		
20:44	ZZZZZZ	1		
20:48	ZZZZZZ	1		
20:52	ZZZZZZ	1		
20:56	ZZZZZZ	1		

Accutest Laboratories Instrument Runlog
Inorganics Analyses

Login Number: F77897
Account: TETTNOAK - Tetra Tech, Inc
Project: Holloman AFB; Alamogordo, NM

File ID: SA111210M1.ICP Date Analyzed: 11/12/10 Methods: SW846 6010C
Analyst: RS Run ID: MA8509
Parameters: Pb

Time	Sample Description	Dilution Factor	PS Recov	Comments
21:00	ZZZZZZ	1		
21:05	ZZZZZZ	1		
21:09	ZZZZZZ	1		
21:13	ZZZZZZ	1		
21:18	MP19474-MB1	1		
21:22	MA8509-CCV14	1		
21:26	MA8509-CCB14	1		
21:30	MP19474-B1	1		
21:34	F77771-1A	1		(sample used for QC only; not part of login F77897)
21:38	MP19474-D1	1		
21:42	MP19474-SD1	5		
21:46	MP19474-S1	1		
21:50	MP19474-S2	1		
21:54	F77897-40	1		
21:58	ZZZZZZ	1		
22:02	ZZZZZZ	1		
22:06	ZZZZZZ	1		
22:11	MA8509-CCV15	1		
22:15	MA8509-CCB15	1		
22:19	F77897-41	1		
22:23	ZZZZZZ	1		
22:27	MP19474-D2	1		
22:31	MP19474-MB2	1		
22:35	MP19474-B2	1		
22:39	MP19474-MB3	1		
22:43	MP19474-B3	1		
---------->	Last reportable sample/prep for job F77897			
22:47	MP19476-MB1	1		
22:52	MP19476-B1	1		
22:55	F78004-2	1		(sample used for QC only; not part of login F77897)
23:00	MA8509-CCV16	1		
23:04	MA8509-CCB16	1		
23:08	MP19476-D1	1		
23:12	MP19476-SD1	5		

Accutest Laboratories Instrument Runlog
Inorganics Analyses

Login Number: F77897
Account: TETTNOAK - Tetra Tech, Inc
Project: Holloman AFB; Alamogordo, NM

File ID: SA111210M1.ICP Date Analyzed: 11/12/10 Methods: SW846 6010C
Analyst: RS Run ID: MA8509
Parameters: Pb

Time	Sample Description	Dilution Factor	PS Recov	Comments
23:16	MP19476-PS1	1		
23:20	MP19476-S1	1		
23:24	MP19476-S2	1		
23:28	ZZZZZZ	1		
23:32	ZZZZZZ	1		
23:36	ZZZZZZ	1		
23:40	ZZZZZZ	1		
23:44	ZZZZZZ	1		
23:49	MA8509-CCV17	1		
23:52	MA8509-CCB17	1		
23:57	MA8509-CRIA2	1		
00:01	MA8509-ICSA2	1		
00:05	MA8509-ICSAB2	1		
00:09	MA8509-CCV18	1		
00:13	MA8509-CCB18	1		

----------> Last reportable CCB for job F77897
Refer to raw data for calibration curve and standards.

INTERNAL STANDARD SUMMARY

Login Number: F77897
Account: TETTNOAK - Tetra Tech, Inc
Project: Holloman AFB; Alamogordo, NM

File ID: SA111210M1.ICP Date Analyzed: 11/12/10 Methods: SW846 6010C
Analyst: RS Run ID: MA8509
Parameters: Pb

Time	Sample Description	Istd#1	Istd#2	Istd#3	Istd#4	Istd#5
09:40	MA8509-STD1	1063	1770	31176	10516	1363
09:44	MA8509-STD2	984	1773	29303	10252	1141
09:47	MA8509-STD3	937	1772	28525	10228	1050
09:53	MA8509-HSTD1	943	1796	28591	10068	1057
09:57	MA8509-ICV1	986	1757	29318	10306	1139
10:04	MA8509-ICB1	1057 R	1799 R	30845 R	10416 R	1367 R
10:09	MA8509-CRIA1	1042	1774	30281	10338	1305
10:18	MA8509-ICSA1	893	1788	26384	9907	945
10:24	MA8509-ICSAB1	903	1793	26578	9859	942
10:34	MA8509-CCV1	988	1770	29398	10258	1136
10:44	MA8509-CCB1	1064	1794	30917	10418	1363
11:12	MP19452-D1	913	1554	27302	10130	1058
11:16	F77889-38	994	1671	29308	10281	1193
11:20	MP19463-D1	993	1695	29389	10212	1205
11:24	MP19463-S1	990	1707	29531	10311	1186
11:28	MP19463-S2	977	1701	29470	10398	1175
11:32	MP19463-PS1	972	1687	29311	10244	1189
11:37	MP19463-SD1	1020	1755	30419	10308	1306
11:41	ZZZZZZ	1008	1709	29957	10431	1249
11:45	ZZZZZZ	924	1595	28066	10119	1087
11:49	MA8509-CCV2	966	1757	29262	10235	1136
11:53	MA8509-CCB2	1033	1790	30863	10343	1365
11:57	ZZZZZZ	933	1615	28181	10123	1095
12:01	ZZZZZZ	924	1594	27997	10165	1079
12:06	ZZZZZZ	934	1633	28104	10109	1108
12:18	ZZZZZZ	1151	2184	34995	12182	1203
12:22	MP19467-MB1	1004	1707	30196	10297	1337
12:26	MP19467-B1	963	1717	28882	10020	1185
12:34	MP19467-D1	828	1465	25623	10146	739 !
12:38	MP19467-SD1	896	1580	27685	10161	990
12:43	MP19467-PS1	843	1490	26133	10432	735 !
12:47	MA8509-CCV3	964	1791	29839	10253	1157
12:51	MA8509-CCB3	1015	1790	31066	10384	1373

INTERNAL STANDARD SUMMARY

Login Number: F77897
Account: TETTNOAK - Tetra Tech, Inc
Project: Holloman AFB; Alamogordo, NM

File ID: SA111210M1.ICP Date Analyzed: 11/12/10 Methods: SW846 6010C
Analyst: RS Run ID: MA8509
Parameters: Pb

Time	Sample Description	Istd#1	Istd#2	Istd#3	Istd#4	Istd#5
12:55	MP19467-S1	756	1363	23802	9704	654 !
12:59	MP19467-S2	862	1549	26950	10648	758 !
13:07	ZZZZZZ	1179	2210	35936	12426	1164
13:15	ZZZZZZ	881	2132	28311	10178	1156
13:28	ZZZZZZ	902	1730	28617	11230	727 !
13:36	MA8509-CCV4	932	1761	29707	10471	1152
13:40	MA8509-CCB4	990	1785	31043	10465	1369
13:44	ZZZZZZ	1277	2890 !	42159 !	15162 !	912
14:05	ZZZZZZ	1095	2222	34610	13275 !	793 !
14:18	ZZZZZZ	1220	2737 !	38930 !	14159 !	1034
14:21	ZZZZZZ	1109	2238	35544	13732 !	831
14:26	MA8509-CCV5	929	1782	29695	10358	1157
14:29	MA8509-CCB5	992	1773	30893	10427	1376
14:34	ZZZZZZ	1384 !	2910 !	44452 !	16965 !	832
14:38	MP19466-MB1	952	1692	30364	10369	1328
14:42	MP19466-B1	921	1680	28980	10146	1182
14:46	F77964-10	1190	2564 !	37987	13414 !	1108
14:50	MP19466-D1	1167	2446 !	37021	13004	1120
14:54	MP19466-SD1	1028	1971	32759	11230	1259
14:58	MP19466-PS1	1173	2485 !	37593	13486 !	1092
15:02	MP19466-S1	1227	2673 !	39396 !	14305 !	1035
15:06	MP19466-S2	1228	2648 !	39106 !	14148 !	1047
15:10	ZZZZZZ	1344 !	2797 !	43362 !	15349 !	1078
15:14	MA8509-CCV6	937	1735	30145	10581	1157
15:18	MA8509-CCB6	986	1751	31272	10626	1372
15:22	ZZZZZZ	1303	2662 !	41225 !	14612 !	1104
15:27	ZZZZZZ	1266	2588 !	40332 !	14172 !	1130
15:30	ZZZZZZ	1381 !	2944 !	44622 !	15998 !	1069
15:35	ZZZZZZ	1188	2698 !	38370	13857 !	1076
15:39	ZZZZZZ	1268	2710 !	41026 !	14575 !	1109
15:43	ZZZZZZ	1276	2905 !	41645 !	14959 !	1080
15:47	ZZZZZZ	1287	2761 !	42168 !	15134 !	1108
15:51	ZZZZZZ	1340 !	2874 !	44366 !	16115 !	1090

INTERNAL STANDARD SUMMARY

Login Number: F77897
Account: TETTNOAK - Tetra Tech, Inc
Project: Holloman AFB; Alamogordo, NM

File ID: SA111210M1.ICP Date Analyzed: 11/12/10 Methods: SW846 6010C
Analyst: RS Run ID: MA8509
Parameters: Pb

Time	Sample Description	Istd#1	Istd#2	Istd#3	Istd#4	Istd#5
15:55	ZZZZZZ	1280	2791 !	42678 !	15302 !	1098
15:59	ZZZZZZ	1262	2771 !	42040 !	15026 !	1115
16:03	MA8509-CCV7	894	1740	30120	10690	1156
16:07	MA8509-CCB7	943	1722	31075	10750	1377
16:23	MA8509-CCV8	882	1703	29280	10527	1140
16:31	MA8509-CCB8	959	1731	31035	10624	1378
16:34	ZZZZZZ	944	1672	30392	10384	1326
16:38	ZZZZZZ	931	1684	30311	10454	1330
16:43	ZZZZZZ	808	1596	28757	10218	1200
16:46	ZZZZZZ	950	1696	30645	10551	1344
16:51	ZZZZZZ	952	1704	30879	10504	1347
16:55	ZZZZZZ	944	1710	31038	10659	1355
16:59	ZZZZZZ	1034	1941	33466	11748	1245
17:03	ZZZZZZ	975	1774	31209	10982	1214
17:07	MP19471-MB1	961	1695	31238	10648	1371
17:11	MP19471-B1	900	1677	29327	10489	1200
17:15	MA8509-CCV9	897	1765	29879	10620	1169
17:19	MA8509-CCB9	969	1742	31198	10722	1401
17:23	F75925-4T	2384 !	4772 !	81587 !	29318 !	1120
17:27	MP19471-D1	2486 !	5080 !	86409 !	31814 !	1103
17:31	MP19471-SD1	1224	2370 !	41095 !	14661 !	1286
17:35	MP19471-PS1	2292 !	4643 !	78863 !	29111 !	1103
17:40	MP19471-S1	1348 !	2949 !	45984 !	16851 !	1097
17:44	MP19471-S2	1424 !	2994 !	48781 !	17879 !	1108
17:48	ZZZZZZ	1398 !	2954 !	47142 !	17672 !	1017
17:52	ZZZZZZ	1198	2553 !	40366 !	15733 !	855
17:56	ZZZZZZ	1347 !	2799 !	44892 !	17332 !	899
18:00	ZZZZZZ	667	1226	21975	9228	667 !
18:04	MA8509-CCV10	915	1724	29995	10740	1165
18:08	MA8509-CCB10	960	1730	31242	10916	1392
18:12	ZZZZZZ	1383 !	2928 !	46046 !	17693 !	911
18:16	ZZZZZZ	2306 !	4701 !	77210 !	28763 !	965
18:20	ZZZZZZ	1192	2613 !	39485 !	14797 !	994

INTERNAL STANDARD SUMMARY

Login Number: F77897
Account: TETTNOAK - Tetra Tech, Inc
Project: Holloman AFB; Alamogordo, NM

File ID: SA111210M1.ICP Date Analyzed: 11/12/10 Methods: SW846 6010C
Analyst: RS Run ID: MA8509
Parameters: Pb

Time	Sample Description	Istd#1	Istd#2	Istd#3	Istd#4	Istd#5
18:24	ZZZZZZ	1839 !	3755 !	61928 !	23660 !	920
18:37	ZZZZZZ	1317	2659 !	44108 !	16941 !	971
18:49	ZZZZZZ	1420 !	2920 !	47602 !	18769 !	894
18:53	MA8509-CCV11	859	1603	28616	10940	1113
18:57	MA8509-CCB11	930	1640	30228	11103	1369
19:01	ZZZZZZ	1653 !	3106 !	54552 !	21640 !	842
19:06	ZZZZZZ	1507 !	2978 !	50087 !	19173 !	995
19:10	ZZZZZZ	1264	2668 !	42647 !	16596 !	980
19:18	MP19475-MB1	882	1592	30030	11105	1344
19:22	MP19475-B1	837	1537	28212	10877	1144
19:26	F77972-1	859	1556	29178	11112	1180
19:30	MP19475-D1	851	1542	28729	11013	1173
19:34	MP19475-SD1	869	1561	29162	10953	1279
19:38	MP19475-PS1	842	1513	28130	10908	1135
19:42	MA8509-CCV12	819	1525	27678	10649	1081
19:46	MA8509-CCB12	878	1542	29286	10955	1322
19:50	MP19475-S1	832	1500	27787	10698	1072
19:54	MP19475-S2	831	1522	27856	10784	1077
19:58	ZZZZZZ	859	1532	28651	11061	1141
20:02	ZZZZZZ	767	1298	25109	10446	1048
20:06	ZZZZZZ	856	1497	28809	10730	1224
20:11	ZZZZZZ	811	1420	27596	10751	1158
20:15	ZZZZZZ	871	1545	29426	11057	1244
20:19	ZZZZZZ	850	1509	28852	10808	1254
20:23	ZZZZZZ	828	1468	28141	10755	1222
20:27	ZZZZZZ	842	1496	28527	10804	1240
20:31	MA8509-CCV13	812	1511	27547	10581	1081
20:35	MA8509-CCB13	870	1551	29328	10910	1320
20:39	ZZZZZZ	835	1489	28154	10708	1231
20:44	ZZZZZZ	829	1466	28132	10816	1215
20:48	ZZZZZZ	779	1379	26062	10455	1060
20:52	ZZZZZZ	735	1278	24105	10085	933
20:56	ZZZZZZ	525 !	931 !	17548 !	8367	576 !

INTERNAL STANDARD SUMMARY

Login Number: F77897
Account: TETTNOAK - Tetra Tech, Inc
Project: Holloman AFB; Alamogordo, NM

File ID: SA111210M1.ICP Date Analyzed: 11/12/10 Methods: SW846 6010C
Analyst: RS Run ID: MA8509
Parameters: Pb

Time	Sample Description	Istd#1	Istd#2	Istd#3	Istd#4	Istd#5
21:00	ZZZZZZ	544 !	932 !	17686 !	8379	592 !
21:05	ZZZZZZ	604 !	1074 !	19948	8987	682 !
21:09	ZZZZZZ	625 !	1099	20222	8896	702 !
21:13	ZZZZZZ	901	1595	30297	11419	1152
21:18	MP19474-MB1	898	1584	29892	10885	1336
21:22	MA8509-CCV14	850	1578	28467	10698	1113
21:26	MA8509-CCB14	900	1622	30122	10880	1345
21:30	MP19474-B1	841	1557	27980	10555	1144
21:34	F77771-1A	822	1474	27130	10489	1126
21:38	MP19474-D1	804	1448	26461	10394	1085
21:42	MP19474-SD1	873	1554	28960	10733	1245
21:46	MP19474-S1	817	1481	26970	10464	1048
21:50	MP19474-S2	824	1496	27166	10448	1062
21:54	F77897-40	800	1428	26529	10440	1063
21:58	ZZZZZZ	827	1493	27311	10653	1122
22:02	ZZZZZZ	827	1474	27371	10565	1130
22:06	ZZZZZZ	807	1449	26429	10444	1085
22:11	MA8509-CCV15	844	1606	28784	10683	1095
22:15	MA8509-CCB15	898	1607	29653	10873	1336
22:19	F77897-41	788	1421	26178	10407	1051
22:23	ZZZZZZ	826	1463	27193	10622	1122
22:27	MP19474-D2	803	1420	26526	10451	1065
22:31	MP19474-MB2	839	1502	27738	10688	1149
22:35	MP19474-B2	710	1397	25747	10273	942
22:39	MP19474-MB3	827	1465	27384	10628	1131
22:43	MP19474-B3	824	1513	27196	10642	1062
22:47	MP19476-MB1	910	1644	29964	10937	1366
22:52	MP19476-B1	872	1600	28537	10724	1168
22:55	F78004-2	898	1619	29621	10868	1333
23:00	MA8509-CCV16	844	1577	28144	10624	1100
23:04	MA8509-CCB16	917	1617	30135	10871	1346
23:08	MP19476-D1	901	1635	29813	10846	1340
23:12	MP19476-SD1	909	1602	29911	10825	1332

INTERNAL STANDARD SUMMARY

Login Number: F77897
Account: TETTNOAK - Tetra Tech, Inc
Project: Holloman AFB; Alamogordo, NM

File ID: SA111210M1.ICP Date Analyzed: 11/12/10 Methods: SW846 6010C
Analyst: RS Run ID: MA8509
Parameters: Pb

Time	Sample Description	Istd#1	Istd#2	Istd#3	Istd#4	Istd#5
23:16	MP19476-PS1	891	1611	29117	10782	1256
23:20	MP19476-S1	867	1590	28629	10683	1159
23:24	MP19476-S2	863	1606	28534	10662	1160
23:28	ZZZZZZ	890	1620	29671	10897	1323
23:32	ZZZZZZ	888	1607	29463	10858	1324
23:36	ZZZZZZ	890	1609	29534	10870	1323
23:40	ZZZZZZ	897	1618	29749	10998	1321
23:44	ZZZZZZ	867	1649	29428	10970	1246
23:49	MA8509-CCV17	837	1590	28084	10521	1098
23:52	MA8509-CCB17	906	1629	30081	10854	1345
23:57	MA8509-CRIA2	886	1595	29302	10761	1272
00:01	MA8509-ICSA2	758	1601	25454	10035	901
00:05	MA8509-ICSAB2	754	1584	25217	9977	894
00:09	MA8509-CCV18	840	1592	28318	10567	1104
00:13	MA8509-CCB18	903	1640	29999	10744	1349

R = Reference for ISTD limits. ! = Outside limits.

LEGEND:

Istd#	Parameter	Limits
Istd#1	Yttrium (2243)	60-125 %
Istd#2	Yttrium (2422)	60-125 %
Istd#3	Yttrium (3242)	60-125 %
Istd#4	Yttrium (3710)	60-125 %
Istd#5	Indium	60-125 %

BLANK RESULTS SUMMARY
Part 1 - Initial and Continuing Calibration Blanks

Login Number: F77897
Account: TETTNOAK - Tetra Tech, Inc
Project: Holloman AFB; Alamogordo, NM

File ID: SA111210M1.ICP Date Analyzed: 11/12/10 Methods: SW846 6010C
QC Limits: result < RL Run ID: MA8509 Units: ug/l

Time:			10:04		10:44		11:53		12:51	
Sample ID:			ICB1		CCB1		CCB2		CCB3	
Metal	RL	IDL	raw	final	raw	final	raw	final	raw	final
Aluminum	200	20								
Antimony	6.0	1	anr							
Arsenic	10	1	anr							
Barium	200	1	anr							
Beryllium	4.0	.1	anr							
Cadmium	5.0	.1	anr							
Calcium	1000	50								
Chromium	10	1	anr							
Cobalt	50	1								
Copper	25	1	anr							
Iron	300	34	anr							
Lead	5.0	1	0.40	<5.0	1.1	<5.0	0.40	<5.0	1.0	<5.0
Magnesium	5000	50								
Manganese	15	1	anr							
Molybdenum	50	1								
Nickel	40	1	anr							
Potassium	10000	50								
Selenium	10	2	anr							
Silver	10	1	anr							
Sodium	10000	750	anr							
Strontium	10	1								
Thallium	10	1	anr							
Tin	50	1								
Titanium	10	1.1								
Vanadium	50	1	anr							
Zinc	20	1	anr							

(*) Outside of QC limits
(anr) Analyte not requested

BLANK RESULTS SUMMARY
Part 1 - Initial and Continuing Calibration Blanks

Login Number: F77897
Account: TETTNOAK - Tetra Tech, Inc
Project: Holloman AFB; Alamogordo, NM

File ID: SA111210M1.ICP Date Analyzed: 11/12/10 Methods: SW846 6010C
QC Limits: result < RL Run ID: MA8509 Units: ug/l

Time:			13:40		14:29		15:18		16:07	
Sample ID:			CCB4		CCB5		CCB6		CCB7	
Metal	RL	IDL	raw	final	raw	final	raw	final	raw	final
Aluminum	200	20								
Antimony	6.0	1	anr							
Arsenic	10	1	anr							
Barium	200	1	anr							
Beryllium	4.0	.1	anr							
Cadmium	5.0	.1	anr							
Calcium	1000	50								
Chromium	10	1	anr							
Cobalt	50	1								
Copper	25	1	anr							
Iron	300	34	anr							
Lead	5.0	1	0.60	<5.0	0.20	<5.0	0.10	<5.0	0.50	<5.0
Magnesium	5000	50								
Manganese	15	1	anr							
Molybdenum	50	1								
Nickel	40	1	anr							
Potassium	10000	50								
Selenium	10	2	anr							
Silver	10	1	anr							
Sodium	10000	750	anr							
Strontium	10	1								
Thallium	10	1	anr							
Tin	50	1								
Titanium	10	1.1								
Vanadium	50	1	anr							
Zinc	20	1	anr							

(*) Outside of QC limits
(anr) Analyte not requested

BLANK RESULTS SUMMARY
Part 1 - Initial and Continuing Calibration Blanks

Login Number: F77897
Account: TETTNOAK - Tetra Tech, Inc
Project: Holloman AFB; Alamogordo, NM

File ID: SA111210M1.ICP Date Analyzed: 11/12/10 Methods: SW846 6010C
QC Limits: result < RL Run ID: MA8509 Units: ug/l

Time:			16:31		17:19		18:08		18:57	
Sample ID:			CCB8		CCB9		CCB10		CCB11	
Metal	RL	IDL	raw	final	raw	final	raw	final	raw	final
Aluminum	200	20								
Antimony	6.0	1	anr							
Arsenic	10	1	anr							
Barium	200	1	anr							
Beryllium	4.0	.1	anr							
Cadmium	5.0	.1	anr							
Calcium	1000	50								
Chromium	10	1	anr							
Cobalt	50	1								
Copper	25	1	anr							
Iron	300	34	anr							
Lead	5.0	1	-0.10	<5.0	1.2	<5.0	1.0	<5.0	0.20	<5.0
Magnesium	5000	50								
Manganese	15	1	anr							
Molybdenum	50	1								
Nickel	40	1	anr							
Potassium	10000	50								
Selenium	10	2	anr							
Silver	10	1	anr							
Sodium	10000	750	anr							
Strontium	10	1								
Thallium	10	1	anr							
Tin	50	1								
Titanium	10	1.1								
Vanadium	50	1	anr							
Zinc	20	1	anr							

(*) Outside of QC limits
(anr) Analyte not requested

BLANK RESULTS SUMMARY
Part 1 - Initial and Continuing Calibration Blanks

Login Number: F77897
Account: TETTNOAK - Tetra Tech, Inc
Project: Holloman AFB; Alamogordo, NM

File ID: SA111210M1.ICP Date Analyzed: 11/12/10 Methods: SW846 6010C
QC Limits: result < RL Run ID: MA8509 Units: ug/l

Time:			19:46		20:35		21:26		22:15	
Sample ID:			CCB12		CCB13		CCB14		CCB15	
Metal	RL	IDL	raw	final	raw	final	raw	final	raw	final
Aluminum	200	20								
Antimony	6.0	1	anr							
Arsenic	10	1	anr							
Barium	200	1	anr							
Beryllium	4.0	.1	anr							
Cadmium	5.0	.1	anr							
Calcium	1000	50								
Chromium	10	1	anr							
Cobalt	50	1								
Copper	25	1	anr							
Iron	300	34	anr							
Lead	5.0	1	0.90	<5.0	0.20	<5.0	0.30	<5.0	0.70	<5.0
Magnesium	5000	50								
Manganese	15	1	anr							
Molybdenum	50	1								
Nickel	40	1	anr							
Potassium	10000	50								
Selenium	10	2	anr							
Silver	10	1	anr							
Sodium	10000	750	anr							
Strontium	10	1								
Thallium	10	1	anr							
Tin	50	1								
Titanium	10	1.1								
Vanadium	50	1	anr							
Zinc	20	1	anr							

(*) Outside of QC limits
(anr) Analyte not requested

BLANK RESULTS SUMMARY
Part 1 - Initial and Continuing Calibration Blanks

Login Number: F77897
Account: TETTNOAK - Tetra Tech, Inc
Project: Holloman AFB; Alamogordo, NM

File ID: SA111210M1.ICP Date Analyzed: 11/12/10 Methods: SW846 6010C
QC Limits: result < RL Run ID: MA8509 Units: ug/l

Time:			23:04		23:52		00:13	
Sample ID:			CCB16		CCB17		CCB18	
Metal	RL	IDL	raw	final	raw	final	raw	final
Aluminum	200	20						
Antimony	6.0	1	anr					
Arsenic	10	1	anr					
Barium	200	1	anr					
Beryllium	4.0	.1	anr					
Cadmium	5.0	.1	anr					
Calcium	1000	50						
Chromium	10	1	anr					
Cobalt	50	1						
Copper	25	1	anr					
Iron	300	34	anr					
Lead	5.0	1	0.60	<5.0	1.2	<5.0	0.40	<5.0
Magnesium	5000	50						
Manganese	15	1	anr					
Molybdenum	50	1						
Nickel	40	1	anr					
Potassium	10000	50						
Selenium	10	2	anr					
Silver	10	1	anr					
Sodium	10000	750	anr					
Strontium	10	1						
Thallium	10	1	anr					
Tin	50	1						
Titanium	10	1.1						
Vanadium	50	1	anr					
Zinc	20	1	anr					

(*) Outside of QC limits
(anr) Analyte not requested

CALIBRATION CHECK STANDARDS SUMMARY
Initial and Continuing Calibration Checks

Login Number: F77897
Account: TETTNOAK - Tetra Tech, Inc
Project: Holloman AFB; Alamogordo, NM

File ID: SA111210M1.ICP Date Analyzed: 11/12/10 Methods: SW846 6010C
QC Limits: 90 to 110 % Recovery Run ID: MA8509 Units: ug/l

Time:		09:57			10:34			11:49	
Sample ID:	ICV	ICV1		CCV	CCV1		CCV	CCV2	
Metal	True	Results	% Rec	True	Results	% Rec	True	Results	% Rec
Aluminum									
Antimony	anr								
Arsenic	anr								
Barium	anr								
Beryllium	anr								
Cadmium	anr								
Calcium									
Chromium	anr								
Cobalt									
Copper	anr								
Iron	anr								
Lead	2000	2020	101.0	2000	1990	99.5	2000	1990	99.5
Magnesium									
Manganese	anr								
Molybdenum									
Nickel	anr								
Potassium									
Selenium	anr								
Silver	anr								
Sodium	anr								
Strontium									
Thallium	anr								
Tin									
Titanium									
Vanadium	anr								
Zinc	anr								

(*) Outside of QC limits
(anr) Analyte not requested

CALIBRATION CHECK STANDARDS SUMMARY
Initial and Continuing Calibration Checks

Login Number: F77897
Account: TETTNOAK - Tetra Tech, Inc
Project: Holloman AFB; Alamogordo, NM

File ID: SA111210M1.ICP Date Analyzed: 11/12/10 Methods: SW846 6010C
QC Limits: 90 to 110 % Recovery Run ID: MA8509 Units: ug/l

Time:		12:47			13:36			14:26	
Sample ID:	CCV	CCV3		CCV	CCV4		CCV	CCV5	
Metal	True	Results	% Rec	True	Results	% Rec	True	Results	% Rec
Aluminum									
Antimony	anr								
Arsenic	anr								
Barium	anr								
Beryllium	anr								
Cadmium	anr								
Calcium									
Chromium	anr								
Cobalt									
Copper	anr								
Iron	anr								
Lead	2000	1980	99.0	2000	1960	98.0	2000	1950	97.5
Magnesium									
Manganese	anr								
Molybdenum									
Nickel	anr								
Potassium									
Selenium	anr								
Silver	anr								
Sodium	anr								
Strontium									
Thallium	anr								
Tin									
Titanium									
Vanadium	anr								
Zinc	anr								

(*) Outside of QC limits
(anr) Analyte not requested

CALIBRATION CHECK STANDARDS SUMMARY
Initial and Continuing Calibration Checks

Login Number: F77897
Account: TETTNOAK - Tetra Tech, Inc
Project: Holloman AFB; Alamogordo, NM

File ID: SA111210M1.ICP Date Analyzed: 11/12/10 Methods: SW846 6010C
QC Limits: 90 to 110 % Recovery Run ID: MA8509 Units: ug/l

Time:		15:14			16:03			16:23	
Sample ID:	CCV	CCV6		CCV	CCV7		CCV	CCV8	
Metal	True	Results	% Rec	True	Results	% Rec	True	Results	% Rec
Aluminum									
Antimony	anr								
Arsenic	anr								
Barium	anr								
Beryllium	anr								
Cadmium	anr								
Calcium									
Chromium	anr								
Cobalt									
Copper	anr								
Iron	anr								
Lead	2000	1940	97.0	2000	1920	96.0	2000	1990	99.5
Magnesium									
Manganese	anr								
Molybdenum									
Nickel	anr								
Potassium									
Selenium	anr								
Silver	anr								
Sodium	anr								
Strontium									
Thallium	anr								
Tin									
Titanium									
Vanadium	anr								
Zinc	anr								

(*) Outside of QC limits
(anr) Analyte not requested

CALIBRATION CHECK STANDARDS SUMMARY
Initial and Continuing Calibration Checks

Login Number: F77897
Account: TETTNOAK - Tetra Tech, Inc
Project: Holloman AFB; Alamogordo, NM

File ID: SA111210M1.ICP Date Analyzed: 11/12/10 Methods: SW846 6010C
QC Limits: 90 to 110 % Recovery Run ID: MA8509 Units: ug/l

Time:		17:15			18:04			18:53	
Sample ID:	CCV	CCV9		CCV	CCV10		CCV	CCV11	
Metal	True	Results	% Rec	True	Results	% Rec	True	Results	% Rec
Aluminum									
Antimony	anr								
Arsenic	anr								
Barium	anr								
Beryllium	anr								
Cadmium	anr								
Calcium									
Chromium	anr								
Cobalt									
Copper	anr								
Iron	anr								
Lead	2000	1990	99.5	2000	1980	99.0	2000	1930	96.5
Magnesium									
Manganese	anr								
Molybdenum									
Nickel	anr								
Potassium									
Selenium	anr								
Silver	anr								
Sodium	anr								
Strontium									
Thallium	anr								
Tin									
Titanium									
Vanadium	anr								
Zinc	anr								

(*) Outside of QC limits
(anr) Analyte not requested

CALIBRATION CHECK STANDARDS SUMMARY
Initial and Continuing Calibration Checks

Login Number: F77897
Account: TETTNOAK - Tetra Tech, Inc
Project: Holloman AFB; Alamogordo, NM

File ID: SA111210M1.ICP Date Analyzed: 11/12/10 Methods: SW846 6010C
QC Limits: 90 to 110 % Recovery Run ID: MA8509 Units: ug/l

Time:		19:42			20:31			21:22	
Sample ID:	CCV	CCV12		CCV	CCV13		CCV	CCV14	
Metal	True	Results	% Rec	True	Results	% Rec	True	Results	% Rec
Aluminum									
Antimony	anr								
Arsenic	anr								
Barium	anr								
Beryllium	anr								
Cadmium	anr								
Calcium									
Chromium	anr								
Cobalt									
Copper	anr								
Iron	anr								
Lead	2000	1900	95.0	2000	1910	95.5	2000	1920	96.0
Magnesium									
Manganese	anr								
Molybdenum									
Nickel	anr								
Potassium									
Selenium	anr								
Silver	anr								
Sodium	anr								
Strontium									
Thallium	anr								
Tin									
Titanium									
Vanadium	anr								
Zinc	anr								

(*) Outside of QC limits
(anr) Analyte not requested

CALIBRATION CHECK STANDARDS SUMMARY
Initial and Continuing Calibration Checks

Login Number: F77897
Account: TETTNOAK - Tetra Tech, Inc
Project: Holloman AFB; Alamogordo, NM

File ID: SA111210M1.ICP Date Analyzed: 11/12/10 Methods: SW846 6010C
QC Limits: 90 to 110 % Recovery Run ID: MA8509 Units: ug/l

Time:		22:11			23:00			23:49	
Sample ID:	CCV	CCV15		CCV	CCV16		CCV	CCV17	
Metal	True	Results	% Rec	True	Results	% Rec	True	Results	% Rec
Aluminum									
Antimony	anr								
Arsenic	anr								
Barium	anr								
Beryllium	anr								
Cadmium	anr								
Calcium									
Chromium	anr								
Cobalt									
Copper	anr								
Iron	anr								
Lead	2000	1950	97.5	2000	1950	97.5	2000	1950	97.5
Magnesium									
Manganese	anr								
Molybdenum									
Nickel	anr								
Potassium									
Selenium	anr								
Silver	anr								
Sodium	anr								
Strontium									
Thallium	anr								
Tin									
Titanium									
Vanadium	anr								
Zinc	anr								

(*) Outside of QC limits
(anr) Analyte not requested

CALIBRATION CHECK STANDARDS SUMMARY
Initial and Continuing Calibration Checks

Login Number: F77897
Account: TETTNOAK - Tetra Tech, Inc
Project: Holloman AFB; Alamogordo, NM

File ID: SA111210M1.ICP Date Analyzed: 11/12/10 Methods: SW846 6010C
QC Limits: 90 to 110 % Recovery Run ID: MA8509 Units: ug/l

Time:		00:09	
Sample ID:	CCV	CCV18	
Metal	True	Results	% Rec
Aluminum			
Antimony	anr		
Arsenic	anr		
Barium	anr		
Beryllium	anr		
Cadmium	anr		
Calcium			
Chromium	anr		
Cobalt			
Copper	anr		
Iron	anr		
Lead	2000	1950	97.5
Magnesium			
Manganese	anr		
Molybdenum			
Nickel	anr		
Potassium			
Selenium	anr		
Silver	anr		
Sodium	anr		
Strontium			
Thallium	anr		
Tin			
Titanium			
Vanadium	anr		
Zinc	anr		

(*) Outside of QC limits
(anr) Analyte not requested

HIGH STANDARD CHECK SUMMARY

Login Number: F77897
Account: TETTNOAK - Tetra Tech, Inc
Project: Holloman AFB; Alamogordo, NM

File ID: SA111210M1.ICP Date Analyzed: 11/12/10 Methods: SW846 6010C
QC Limits: 95 to 105 % Recovery Run ID: MA8509 Units: ug/l

Time:		09:53	
Sample ID:	HSTD	HSTD1	
Metal	True	Results	% Rec
Aluminum			
Antimony	anr		
Arsenic	anr		
Barium	anr		
Beryllium	anr		
Cadmium	anr		
Calcium			
Chromium	anr		
Cobalt			
Copper	anr		
Iron	anr		
Lead	4000	4020	100.5
Magnesium			
Manganese	anr		
Molybdenum			
Nickel	anr		
Potassium			
Selenium	anr		
Silver	anr		
Sodium	anr		
Strontium			
Thallium	anr		
Tin			
Titanium			
Vanadium	anr		
Zinc	anr		

(*) Outside of QC limits
(anr) Analyte not requested

LOW CALIBRATION CHECK STANDARDS SUMMARY

Login Number: F77897
Account: TETTNOAK - Tetra Tech, Inc
Project: Holloman AFB; Alamogordo, NM

File ID: SA111210M1.ICP Date Analyzed: 11/12/10 Methods: SW846 6010C
QC Limits: CRI 70-130% CRIA 70-130% Run ID: MA8509 Units: ug/l

Time:			10:09		23:57	
Sample ID:	CRI	CRIA	CRIA1		CRIA2	
Metal	True	True	Results	% Rec	Results	% Rec
Aluminum	400	200				
Antimony	10	5.0	anr			
Arsenic	20	10	anr			
Barium	400	200	anr			
Beryllium	10	5.0	anr			
Cadmium	10	5.0	anr			
Calcium	2000	1000				
Chromium	20	10	anr			
Cobalt	100	50				
Copper	50	25	anr			
Iron	600	300	anr			
Lead	10	5.0	5.8	116.0	4.9	98.0
Magnesium	10000	5000				
Manganese	30	15	anr			
Molybdenum	100	50				
Nickel	80	40	anr			
Potassium	20000	10000				
Selenium	20	10	anr			
Silver	20	10	anr			
Sodium	20000	10000	anr			
Strontium	20	10				
Thallium	20	10	anr			
Tin	100	50				
Titanium	20	10				
Vanadium	100	50	anr			
Zinc	40	20	anr			

(*) Outside of QC limits
(anr) Analyte not requested

INTERFERING ELEMENT CHECK STANDARDS SUMMARY
Part 1 - ICSA and ICSAB Standards

Login Number: F77897
Account: TETTNOAK - Tetra Tech, Inc
Project: Holloman AFB; Alamogordo, NM

File ID: SA111210M1.ICP Date Analyzed: 11/12/10 Methods: SW846 6010C
QC Limits: 80 to 120 % Recovery Run ID: MA8509 Units: ug/l

Time:			10:18		10:24		00:01		00:05	
Sample ID:	ICSA	ICSAB	ICSA1		ICSAB1		ICSA2		ICSAB2	
Metal	True	True	Results	% Rec	Results	% Rec	Results	% Rec	Results	% Rec
Aluminum	500000	500000	497000	99.4	487000	97.4	508000	101.6	506000	101.2
Antimony		1000	1.8		982	98.2	-4.2		1050	105.0
Arsenic		1000	0.0		983	98.3	2.6		1050	105.0
Barium		500	2.2		516	103.2	-1.3		547	109.4
Beryllium		500	-0.10		486	97.2	0.0		489	97.8
Cadmium		1000	0.10		922	92.2	4.1		925	92.5
Calcium	500000	500000	466000	93.2	471000	94.2	444000	88.8	454000	90.8
Chromium		500	-0.80		425	85.0	-0.40		426	85.2
Cobalt		500	0.10		491	98.2	0.30		479	95.8
Copper		500	1.5		502	100.4	0.70		553	110.6
Iron	200000	200000	187000	93.5	187000	93.5	178000	89.0	178000	89.0
Lead		1000	0.10		986	98.6	8.1		963	96.3
Magnesium	500000	500000	508000	101.6	516000	103.2	485000	97.0	496000	99.2
Manganese		500	0.30		437	87.4	0.40		438	87.6
Molybdenum		1000	0.50		933	93.3	0.0		959	95.9
Nickel		1000	0.80		984	98.4	2.9		963	96.3
Potassium			6.8		0.10		-14		-17	
Selenium		1000	0.0		972	97.2	-4.2		1030	103.0
Silver		1000	0.10		1110	111.0	1.0		1140	114.0
Sodium			-180		-240		-450		-1700	
Strontium		1000	-5.9		-6.0	0.0	-5.0		-5.1	0.0
Thallium		1000	1.3		955	95.5	7.6		941	94.1
Tin		1000	6.1		931	93.1	7.5		907	90.7
Titanium		1000	4.7		5.4	0.5	4.7		5.5	0.6
Vanadium		500	-0.50		435	87.0	0.60		451	90.2
Zinc		1000	-4.4		883	88.3	-4.4		847	84.7

(*) Outside of QC limits
(anr) Analyte not requested

Accutest Laboratories Instrument Runlog
Inorganics Analyses

Login Number: F77897
Account: TETTNOAK - Tetra Tech, Inc
Project: Holloman AFB; Alamogordo, NM

File ID: SA111510M1.ICP Date Analyzed: 11/15/10 Methods: SW846 6010C
Analyst: RS Run ID: MA8510
Parameters: As,Ba,Cd,Cr,Pb,Se,Ag

Time	Sample Description	Dilution Factor	PS Recov	Comments
09:32	MA8510-STD1	1		STDA
09:36	MA8510-STD2	1		STDB
09:39	MA8510-STD3	1		STDC
09:43	MA8510-HSTD1	1		
09:47	MA8510-ICV1	1		
09:57	MA8510-ICB1	1		
10:01	MA8510-CRIA1	1		
10:10	MA8510-ICSA1	1		
10:17	MA8510-ICSAB1	1		
10:22	MA8510-CCV1	1		
10:31	MA8510-CCB1	1		
11:18	ZZZZZZ	4		
11:22	ZZZZZZ	10		
11:26	ZZZZZZ	2		
11:30	MA8510-CCV2	1		
11:34	MA8510-CCB2	1		
11:38	ZZZZZZ	10		
11:42	ZZZZZZ	5		
11:46	ZZZZZZ	4		
11:50	ZZZZZZ	2		
11:54	ZZZZZZ	4		
11:58	ZZZZZZ	2		
12:02	ZZZZZZ	5		
12:06	ZZZZZZ	5		
12:10	ZZZZZZ	5		
12:14	ZZZZZZ	4		
12:18	MA8510-CCV3	1		
12:22	MA8510-CCB3	1		
12:26	ZZZZZZ	4		
12:31	F77959-1	4		(sample used for QC only; not part of login F77897)
12:35	MP19467-D1	4		
12:39	MP19467-S1	4		
12:44	MP19467-S2	4		

Accutest Laboratories Instrument Runlog
Inorganics Analyses

Login Number: F77897
Account: TETTNOAK - Tetra Tech, Inc
Project: Holloman AFB; Alamogordo, NM

File ID: SA111510M1.ICP Date Analyzed: 11/15/10 Methods: SW846 6010C
Analyst: RS Run ID: MA8510
Parameters: As,Ba,Cd,Cr,Pb,Se,Ag

Time	Sample Description	Dilution Factor	PS Recov	Comments
12:48	MP19467-PS1	4		
12:52	MP19467-SD1	20		
12:56	ZZZZZZ	4		
13:01	F77959-1	20		(sample used for QC only; not part of login F77897)
13:05	MP19467-D1	20		
13:09	MA8510-CCV4	1		
13:13	MA8510-CCB4	1		
13:17	MP19467-S1	20		
13:22	MP19467-S2	20		
13:26	MP19467-PS1	20		
13:30	MP19467-SD1	100		
13:34	F77964-10	5		(sample used for QC only; not part of login F77897)
13:38	MP19466-D1	5		
13:42	MP19466-S1	5		
13:46	MP19466-S2	5		
13:50	MP19466-PS1	5		
13:54	MP19466-SD1	25		
13:58	MA8510-CCV5	1		
14:02	MA8510-CCB5	1		
14:06	ZZZZZZ	5		
14:10	ZZZZZZ	5		
14:14	ZZZZZZ	5		
14:18	ZZZZZZ	5		
14:22	ZZZZZZ	5		
14:26	ZZZZZZ	5		
14:30	ZZZZZZ	5		
14:34	ZZZZZZ	5		
14:38	ZZZZZZ	5		
14:42	ZZZZZZ	5		
14:47	MA8510-CCV6	1		
14:50	MA8510-CCB6	1		
14:55	ZZZZZZ	5		
14:59	ZZZZZZ	1		

Accutest Laboratories Instrument Runlog
Inorganics Analyses

Login Number: F77897
Account: TETTNOAK - Tetra Tech, Inc
Project: Holloman AFB; Alamogordo, NM

File ID: SA111510M1.ICP Date Analyzed: 11/15/10 Methods: SW846 6010C
Analyst: RS Run ID: MA8510
Parameters: As,Ba,Cd,Cr,Pb,Se,Ag

Time	Sample Description	Dilution Factor	PS Recov	Comments
15:03	ZZZZZZ	1		
15:07	ZZZZZZ	1		
15:11	ZZZZZZ	1		
15:15	ZZZZZZ	1		
15:19	ZZZZZZ	1		
15:23	ZZZZZZ	1		
15:27	ZZZZZZ	1		
15:31	F75925-4T	10		(sample used for QC only; not part of login F77897)
15:36	MA8510-CCV7	1		
15:39	MA8510-CCB7	1		
15:56	MA8510-CCV8	1		
16:01	MA8510-CCB8	1		
16:05	MP19471-D1	10		
16:09	MP19471-S1	10		
16:13	MP19471-S2	10		
16:17	MP19471-PS1	10		
16:21	MP19471-SD1	50		
16:25	ZZZZZZ	5		
16:29	ZZZZZZ	5		
16:33	ZZZZZZ	5		
16:37	ZZZZZZ	5		
16:41	ZZZZZZ	2		
16:45	MA8510-CCV9	1		
16:49	MA8510-CCB9	1		
16:54	ZZZZZZ	5		
16:58	ZZZZZZ	5		
17:02	ZZZZZZ	5		
17:06	ZZZZZZ	4		
17:10	ZZZZZZ	4		
17:14	ZZZZZZ	4		
17:18	ZZZZZZ	5		
17:22	ZZZZZZ	5		
17:26	ZZZZZZ	5		

Accutest Laboratories Instrument Runlog
Inorganics Analyses

Login Number: F77897
Account: TETTNOAK - Tetra Tech, Inc
Project: Holloman AFB; Alamogordo, NM

File ID: SA111510M1.ICP Date Analyzed: 11/15/10 Methods: SW846 6010C
Analyst: RS Run ID: MA8510
Parameters: As,Ba,Cd,Cr,Pb,Se,Ag

Time	Sample Description	Dilution Factor	PS Recov	Comments
17:30	ZZZZZZ	4		
17:34	MA8510-CCV10	1		
17:38	MA8510-CCB10	1		
17:42	ZZZZZZ	4		
17:46	ZZZZZZ	20		
17:51	ZZZZZZ	4		
17:55	ZZZZZZ	4		
17:59	ZZZZZZ	4		
18:04	ZZZZZZ	4		
18:24	MA8510-CCV11	1		
18:28	MA8510-CCB11	1		
18:56	MP19484-MB1	1		
19:00	MP19484-B1	1		
19:04	F77995-1	1		(sample used for QC only; not part of login F77897)
19:08	MP19484-D1	1		
19:12	MA8510-CCV12	1		
19:16	MA8510-CCB12	1		
19:21	MP19484-SD1	5		
19:25	MP19484-PS1	1		
19:29	MP19484-S1	1		
19:33	MP19484-S2	1		
19:37	ZZZZZZ	1		
19:41	ZZZZZZ	1		
19:45	ZZZZZZ	1		
19:49	ZZZZZZ	1		
19:53	ZZZZZZ	1		
19:58	ZZZZZZ	1		
20:02	MA8510-CCV13	1		
20:06	MA8510-CCB13	1		
20:10	ZZZZZZ	1		
20:14	ZZZZZZ	1		
20:19	ZZZZZZ	1		
20:23	ZZZZZZ	1		

Accutest Laboratories Instrument Runlog
Inorganics Analyses

Login Number: F77897
Account: TETTNOAK - Tetra Tech, Inc
Project: Holloman AFB; Alamogordo, NM

File ID: SA111510M1.ICP Date Analyzed: 11/15/10 Methods: SW846 6010C
Analyst: RS Run ID: MA8510
Parameters: As,Ba,Cd,Cr,Pb,Se,Ag

Time	Sample Description	Dilution Factor	PS Recov	Comments
20:27	ZZZZZZ	1		
20:32	ZZZZZZ	1		
20:36	ZZZZZZ	1		
20:41	ZZZZZZ	1		
20:45	ZZZZZZ	1		
20:49	ZZZZZZ	1		
20:54	MA8510-CCV14	1		
20:58	MA8510-CCB14	1		
21:02	ZZZZZZ	1		
21:06	ZZZZZZ	1		
21:10	ZZZZZZ	1		
21:14	MP19479-MB1	1		
21:19	MP19479-B1	1		
21:22	F77969-2	1		(sample used for QC only; not part of login F77897)
21:26	MP19479-D1	1		
21:30	MP19479-SD1	5		
21:34	MP19479-PS1	1		
21:38	MP19479-S1	1		
21:42	MA8510-CCV15	1		
21:46	MA8510-CCB15	1		
21:50	MP19479-S2	1		
21:54	ZZZZZZ	1		
21:58	ZZZZZZ	1		
22:02	ZZZZZZ	1		
22:06	ZZZZZZ	1		
22:11	ZZZZZZ	1		
22:15	ZZZZZZ	1		
22:19	ZZZZZZ	1		
22:23	ZZZZZZ	1		
22:27	ZZZZZZ	1		
22:31	MA8510-CCV16	1		
22:35	MA8510-CCB16	1		
22:39	ZZZZZZ	1		

Accutest Laboratories Instrument Runlog
Inorganics Analyses

Login Number: F77897
Account: TETTNOAK - Tetra Tech, Inc
Project: Holloman AFB; Alamogordo, NM

File ID: SA111510M1.ICP Date Analyzed: 11/15/10 Methods: SW846 6010C
Analyst: RS Run ID: MA8510
Parameters: As,Ba,Cd,Cr,Pb,Se,Ag

Time	Sample Description	Dilution Factor	PS Recov	Comments
22:43	ZZZZZZ	1		
22:47	ZZZZZZ	1		
22:51	ZZZZZZ	1		
22:55	ZZZZZZ	1		
23:00	ZZZZZZ	1		
23:04	ZZZZZZ	1		
23:08	ZZZZZZ	1		
23:12	MP19483-MB1	1		
23:16	MP19483-B1	1		
23:20	MA8510-CCV17	1		
23:24	MA8510-CCB17	1		
23:28	F77897-1	1		
23:33	MP19483-D1	1		
23:37	MP19483-SD1	5		
23:41	MP19483-PS1	1		
23:45	MP19483-S1	1		
23:49	MP19483-S2	1		
23:53	F77897-2	1		
23:57	F77897-3	1		
00:02	F77897-4	1		
00:06	F77897-5	1		
00:10	MA8510-CCV18	1		
00:14	MA8510-CCB18	1		
00:18	F77897-6	1		
00:22	F77897-7	1		
00:26	F77897-8	1		
00:31	F77897-9	1		
00:35	F77897-10	1		
00:39	F77897-11	1		
00:43	F77897-12	1		
00:48	F77897-13	1		
00:52	F77897-14	1		
00:56	F77897-15	1		

Accutest Laboratories Instrument Runlog
Inorganics Analyses

Login Number: F77897
Account: TETTNOAK - Tetra Tech, Inc
Project: Holloman AFB; Alamogordo, NM

File ID: SA111510M1.ICP Date Analyzed: 11/15/10 Methods: SW846 6010C
Analyst: RS Run ID: MA8510
Parameters: As,Ba,Cd,Cr,Pb,Se,Ag

	Time	Sample Description	Dilution Factor	PS Recov	Comments
	01:00	MA8510-CCV19	1		
	01:04	MA8510-CCB19	1		
	01:08	F77897-16	1		
	01:13	F77897-17	1		
	01:17	F77897-18	1		
	01:21	F77897-19	1		
---------->	Last reportable sample/prep for job F77897				
	01:25	ZZZZZZ	1		
	01:29	MP19481-MB1	1		
	01:34	MP19481-B1	1		
	01:38	F78023-1	1		(sample used for QC only; not part of login F77897)
	01:42	MP19481-D1	1		
	01:46	MP19481-SD1	5		
	01:50	MA8510-CCV20	1		
	01:54	MA8510-CCB20	1		
	01:58	MP19481-PS1	1		
	02:02	MP19481-S1	1		
	02:06	MP19481-S2	1		
	02:10	ZZZZZZ	1		
	02:14	ZZZZZZ	1		
	02:18	ZZZZZZ	1		
	02:22	ZZZZZZ	1		
	02:26	ZZZZZZ	1		
	02:30	ZZZZZZ	1		
	02:34	ZZZZZZ	1		
	02:38	MA8510-CCV21	1		
	02:42	MA8510-CCB21	1		
	02:46	ZZZZZZ	1		
	02:51	ZZZZZZ	1		
	02:55	ZZZZZZ	1		
	02:59	ZZZZZZ	1		
	03:03	ZZZZZZ	1		
	03:07	ZZZZZZ	1		
	03:11	ZZZZZZ	1		

Accutest Laboratories Instrument Runlog
Inorganics Analyses

Login Number: F77897
Account: TETTNOAK - Tetra Tech, Inc
Project: Holloman AFB; Alamogordo, NM

File ID: SA111510M1.ICP Date Analyzed: 11/15/10 Methods: SW846 6010C
Analyst: RS Run ID: MA8510
Parameters: As,Ba,Cd,Cr,Pb,Se,Ag

Time	Sample Description	Dilution Factor	PS Recov	Comments
03:15	ZZZZZZ	1		
03:19	ZZZZZZ	1		
03:23	ZZZZZZ	1		
03:27	MA8510-CCV22	1		
03:31	MA8510-CCB22	1		
03:35	ZZZZZZ	1		
03:40	ZZZZZZ	1		
03:44	MP19482-MB1	1		
03:48	MP19482-B1	1		
03:52	F78024-1	1		(sample used for QC only; not part of login F77897)
03:56	MP19482-D1	1		
04:01	MP19482-SD1	5		
04:05	MP19482-PS1	1		
04:09	MP19482-S1	1		
04:13	MP19482-S2	1		
04:18	MA8510-CCV23	1		
04:22	MA8510-CCB23	1		
04:26	ZZZZZZ	1		
04:30	ZZZZZZ	1		
04:34	ZZZZZZ	1		
04:38	ZZZZZZ	1		
04:42	ZZZZZZ	1		
04:46	ZZZZZZ	1		
04:50	ZZZZZZ	1		
04:55	ZZZZZZ	1		
04:59	ZZZZZZ	1		
05:03	ZZZZZZ	1		
05:07	MA8510-CCV24	1		
05:11	MA8510-CCB24	1		
05:15	ZZZZZZ	1		
05:19	ZZZZZZ	1		
05:23	ZZZZZZ	1		
05:27	ZZZZZZ	1		

Accutest Laboratories Instrument Runlog
Inorganics Analyses

Login Number: F77897
Account: TETTNOAK - Tetra Tech, Inc
Project: Holloman AFB; Alamogordo, NM

File ID: SA111510M1.ICP Date Analyzed: 11/15/10 Methods: SW846 6010C
Analyst: RS Run ID: MA8510
Parameters: As,Ba,Cd,Cr,Pb,Se,Ag

Time	Sample Description	Dilution Factor	PS Recov	Comments
05:31	ZZZZZZ	1		
05:35	ZZZZZZ	1		
05:40	ZZZZZZ	1		
05:44	ZZZZZZ	1		
05:48	ZZZZZZ	1		
05:52	MA8510-CRIA2	1		
05:56	MA8510-CCV25	1		
06:00	MA8510-CCB25	1		
06:04	MA8510-ICSA2	1		
06:09	MA8510-ICSAB2	1		
06:13	MA8510-CCV26	1		
06:17	MA8510-CCB26	1		

----------> Last reportable CCB for job F77897
Refer to raw data for calibration curve and standards.

INTERNAL STANDARD SUMMARY

Login Number: F77897
Account: TETTNOAK - Tetra Tech, Inc
Project: Holloman AFB; Alamogordo, NM

File ID: SA111510M1.ICP Date Analyzed: 11/15/10 Methods: SW846 6010C
Analyst: RS Run ID: MA8510
Parameters: As,Ba,Cd,Cr,Pb,Se,Ag

Time	Sample Description	Istd#1	Istd#2	Istd#3	Istd#4	Istd#5
09:32	MA8510-STD1	2049	1650	30724	15220	1303
09:36	MA8510-STD2	1903	1605	28370	14829	1098
09:39	MA8510-STD3	1820	1608	27591	14686	1016
09:43	MA8510-HSTD1	1839	1617	27566	14721	1027
09:47	MA8510-ICV1	1908	1606	28647	14933	1099
09:57	MA8510-ICB1	2046 R	1648 R	30112 R	15099 R	1314 R
10:01	MA8510-CRIA1	2000	1613	29794	15244	1251
10:10	MA8510-ICSA1	1672	1614	25090	14205	904
10:17	MA8510-ICSAB1	1703	1632	25106	14001	908
10:22	MA8510-CCV1	1875	1594	28292	14811	1087
10:31	MA8510-CCB1	1984	1622	29671	15037	1287
11:18	ZZZZZZ	1912	1725	28946	15850	961
11:22	ZZZZZZ	1907	1617	29151	14675	1182
11:26	ZZZZZZ	2323	2278 !	35101	18792	1022
11:30	MA8510-CCV2	1843	1605	28189	14795	1091
11:34	MA8510-CCB2	1988	1649	29659	15039	1309
11:38	ZZZZZZ	1832	1506	27641	14717	1026
11:42	ZZZZZZ	2197	1945	33813	18307	999
11:46	ZZZZZZ	1992	1779	30721	17025	958
11:50	ZZZZZZ	2311	2136 !	35274	19055 !	1029
11:54	ZZZZZZ	2211	1977	33745	17771	1138
11:58	ZZZZZZ	2272	2085 !	34846	18549	1076
12:02	ZZZZZZ	2159	1950	33080	17429	1143
12:06	ZZZZZZ	2080	1900	31746	16942	1131
12:10	ZZZZZZ	2035	1830	30805	16185	1154
12:14	ZZZZZZ	1912	1639	29580	16274	986
12:18	MA8510-CCV3	1808	1567	27980	15021	1087
12:22	MA8510-CCB3	1911	1593	29631	15380	1291
12:26	ZZZZZZ	2083	1861	31954	17479	981
12:31	F77959-1	1677	1375	25770	14625	902
12:35	MP19467-D1	1639	1351	25248	14503	900
12:39	MP19467-S1	1548	1314	24066	14160	836
12:44	MP19467-S2	1700	1415	25967	14684	931

INTERNAL STANDARD SUMMARY

Login Number: F77897
Account: TETTNOAK - Tetra Tech, Inc
Project: Holloman AFB; Alamogordo, NM

File ID: SA111510M1.ICP Date Analyzed: 11/15/10 Methods: SW846 6010C
Analyst: RS Run ID: MA8510
Parameters: As,Ba,Cd,Cr,Pb,Se,Ag

Time	Sample Description	Istd#1	Istd#2	Istd#3	Istd#4	Istd#5
12:48	MP19467-PS1	1676	1381	25794	14710	897
12:52	MP19467-SD1	1775	1460	27427	15126	1081
12:56	ZZZZZZ	1615	1368	24809	14269	887
13:01	F77959-1	1811	1469	27671	14969	1094
13:05	MP19467-D1	1782	1459	27539	15158	1086
13:09	MA8510-CCV4	1793	1551	27992	15131	1084
13:13	MA8510-CCB4	1936	1603	29719	15329	1305
13:17	MP19467-S1	1758	1443	26943	14801	1050
13:22	MP19467-S2	1782	1473	27753	15122	1098
13:26	MP19467-PS1	1752	1448	27072	15007	1079
13:30	MP19467-SD1	1878	1540	28965	15290	1215
13:34	F77964-10	2018	1765	31383	16367	1193
13:38	MP19466-D1	1972	1726	30695	16200	1191
13:42	MP19466-S1	1974	1769	30527	16380	1142
13:46	MP19466-S2	1999	1786	30746	16296	1156
13:50	MP19466-PS1	2014	1768	31039	16166	1186
13:54	MP19466-SD1	1943	1642	30315	15751	1266
13:58	MA8510-CCV5	1781	1554	27853	15051	1086
14:02	MA8510-CCB5	1919	1606	29730	15294	1300
14:06	ZZZZZZ	2057	1803	31909	16789	1184
14:10	ZZZZZZ	2053	1802	32046	16756	1193
14:14	ZZZZZZ	1998	1756	31158	16486	1203
14:18	ZZZZZZ	2017	1845	31669	16925	1167
14:22	ZZZZZZ	1973	1803	30434	16208	1173
14:26	ZZZZZZ	2044	1797	31549	16516	1201
14:30	ZZZZZZ	2052	1867	31936	16865	1177
14:34	ZZZZZZ	2032	1805	31989	16912	1188
14:38	ZZZZZZ	2047	1815	31955	16914	1189
14:42	ZZZZZZ	2052	1857	32039	16759	1191
14:47	MA8510-CCV6	1811	1577	28701	15353	1106
14:50	MA8510-CCB6	1906	1593	30184	15593	1309
14:55	ZZZZZZ	1998	1812	31338	16695	1188
14:59	ZZZZZZ	2524	2425 !	38991 !	21166 !	1067

INTERNAL STANDARD SUMMARY

Login Number: F77897
Account: TETTNOAK - Tetra Tech, Inc
Project: Holloman AFB; Alamogordo, NM

File ID: SA111510M1.ICP Date Analyzed: 11/15/10 Methods: SW846 6010C
Analyst: RS Run ID: MA8510
Parameters: As,Ba,Cd,Cr,Pb,Se,Ag

Time	Sample Description	Istd#1	Istd#2	Istd#3	Istd#4	Istd#5
15:03	ZZZZZZ	2486	2387 !	38686 !	20641 !	1092
15:07	ZZZZZZ	2334	2444 !	36486	19845 !	1044
15:11	ZZZZZZ	2509	2442 !	39161 !	21084 !	1072
15:15	ZZZZZZ	2549	2627 !	39858 !	21553 !	1042
15:19	ZZZZZZ	2564 !	2525	40647 !	21824 !	1072
15:23	ZZZZZZ	2552	2566 !	40362 !	22098 !	1058
15:27	ZZZZZZ	2531	2539 !	39967 !	21658 !	1073
15:31	F75925-4T	2266	1960	36176	18838	1279
15:36	MA8510-CCV7	1775	1542	28380	15512	1103
15:39	MA8510-CCB7	1875	1575	29809	15696	1313
15:56	MA8510-CCV8	1737	1527	27794	15229	1088
16:01	MA8510-CCB8	1889	1561	30009	15706	1312
16:05	MP19471-D1	2202	1892	35576	19004 !	1235
16:09	MP19471-S1	1907	1661	30708	16573	1220
16:13	MP19471-S2	1954	1679	31077	16641	1235
16:17	MP19471-PS1	2186	1868	34881	18621	1239
16:21	MP19471-SD1	1922	1622	30870	16431	1289
16:25	ZZZZZZ	1965	1745	31479	17481	1122
16:29	ZZZZZZ	1880	1667	30090	16774	1018
16:33	ZZZZZZ	1982	1747	31751	17525	1056
16:37	ZZZZZZ	1516	1268	24387	14388	878
16:41	ZZZZZZ	2264	2080 !	36461	20602 !	957
16:45	MA8510-CCV9	1761	1506	28312	15417	1098
16:49	MA8510-CCB9	1843	1539	30147	15934	1302
16:54	ZZZZZZ	2388	2112 !	38593 !	21468 !	1087
16:58	ZZZZZZ	2146	1872	34564	19406 !	1065
17:02	ZZZZZZ	2017	1748	32442	17935	1076
17:06	ZZZZZZ	1455	1192	23504	14138	837
17:10	ZZZZZZ	2101	1877	34310	19367 !	1029
17:14	ZZZZZZ	2148	1874	34892	19896 !	1006
17:18	ZZZZZZ	2028	1810	32826	18125	1074
17:22	ZZZZZZ	2033	1766	33626	19017 !	1015
17:26	ZZZZZZ	1999	1767	32707	18261	1130

INTERNAL STANDARD SUMMARY

Login Number: F77897
Account: TETTNOAK - Tetra Tech, Inc
Project: Holloman AFB; Alamogordo, NM

File ID: SA111510M1.ICP Date Analyzed: 11/15/10 Methods: SW846 6010C
Analyst: RS Run ID: MA8510
Parameters: As,Ba,Cd,Cr,Pb,Se,Ag

Time	Sample Description	Istd#1	Istd#2	Istd#3	Istd#4	Istd#5
17:30	ZZZZZZ	2303	2016	37297	20572 !	1116
17:34	MA8510-CCV10	1718	1488	27864	15395	1084
17:38	MA8510-CCB10	1810	1500	29654	15929	1297
17:42	ZZZZZZ	1718	1435	27842	15589	1170
17:46	ZZZZZZ	1726	1451	27797	15529	1190
17:51	ZZZZZZ	1332	1119	21284	13585	787 !
17:55	ZZZZZZ	1335	1108	21495	13324	785 !
17:59	ZZZZZZ	1464	1183	23481	14215	877
18:04	ZZZZZZ	1458	1202	23444	14028	882
18:24	MA8510-CCV11	1763	1487	28058	15133	1093
18:28	MA8510-CCB11	1851	1518	30068	15802	1312
18:56	MP19484-MB1	1827	1479	29493	15655	1286
19:00	MP19484-B1	1727	1436	27759	15286	1117
19:04	F77995-1	2141	1799	34551	18884 !	1083
19:08	MP19484-D1	2127	1790	34163	18823	1072
19:12	MA8510-CCV12	1693	1462	27330	15147	1069
19:16	MA8510-CCB12	1807	1493	28814	15492	1290
19:21	MP19484-SD1	1920	1586	30285	16216	1218
19:25	MP19484-PS1	2156	1800	34494	18781	1070
19:29	MP19484-S1	2104	1807	33785	18749	1028
19:33	MP19484-S2	2082	1782	33482	18722	1022
19:37	ZZZZZZ	1631	1359	26654	15026	1090
19:41	ZZZZZZ	1678	1395	27013	15028	1098
19:45	ZZZZZZ	1728	1425	27239	15069	1107
19:49	ZZZZZZ	1711	1415	27571	15145	1048
19:53	ZZZZZZ	1753	1463	28244	15842	1009
19:58	ZZZZZZ	1658	1359	26830	15098	1124
20:02	MA8510-CCV13	1738	1473	27773	15135	1084
20:06	MA8510-CCB13	1831	1494	29572	15795	1298
20:10	ZZZZZZ	1663	1361	26976	15155	1128
20:14	ZZZZZZ	1606	1325	26075	14883	1073
20:19	ZZZZZZ	1706	1385	27101	15040	1141
20:23	ZZZZZZ	1655	1335	27048	15168	1098

INTERNAL STANDARD SUMMARY

Login Number: F77897
Account: TETTNOAK - Tetra Tech, Inc
Project: Holloman AFB; Alamogordo, NM

File ID: SA111510M1.ICP Date Analyzed: 11/15/10 Methods: SW846 6010C
Analyst: RS Run ID: MA8510
Parameters: As,Ba,Cd,Cr,Pb,Se,Ag

Time	Sample Description	Istd#1	Istd#2	Istd#3	Istd#4	Istd#5
20:27	ZZZZZZ	1644	1348	26568	15060	1101
20:32	ZZZZZZ	1643	1343	26493	15041	1102
20:36	ZZZZZZ	1646	1355	26392	14887	1094
20:41	ZZZZZZ	1669	1351	27135	15172	1114
20:45	ZZZZZZ	1626	1339	26616	15073	1087
20:49	ZZZZZZ	1547	1268	25288	14904	1043
20:54	MA8510-CCV14	1714	1465	27355	15104	1077
20:58	MA8510-CCB14	1854	1516	29671	15655	1310
21:02	ZZZZZZ	1741	1437	28490	15563	1218
21:06	ZZZZZZ	1739	1436	28221	15512	1208
21:10	ZZZZZZ	1687	1397	27439	15322	1168
21:14	MP19479-MB1	1793	1441	28470	15267	1273
21:19	MP19479-B1	1727	1411	27379	14957	1119
21:22	F77969-2	1788	1998	28594	15322	1016
21:26	MP19479-D1	1803	2050	28786	15148	997
21:30	MP19479-SD1	1827	1707	29270	15621	1173
21:34	MP19479-PS1	1814	2003	28588	15143	1017
21:38	MP19479-S1	1755	1941	28145	15047	968
21:42	MA8510-CCV15	1745	1511	28168	15407	1098
21:46	MA8510-CCB15	1819	1501	29369	15734	1309
21:50	MP19479-S2	1762	1970	27820	14812	964
21:54	ZZZZZZ	1813	1991	28942	15265	1016
21:58	ZZZZZZ	2028	1744	32170	17469	953
22:02	ZZZZZZ	1790	1457	28732	15608	1156
22:06	ZZZZZZ	2081	1803	33119	17914	984
22:11	ZZZZZZ	1977	1681	31393	17046	1131
22:15	ZZZZZZ	2070	1763	32572	17427	1158
22:19	ZZZZZZ	2408	2302 !	39206 !	20967 !	1067
22:23	ZZZZZZ	2187	2157 !	35091	18759	1042
22:27	ZZZZZZ	2003	1855	31935	17197	1102
22:31	MA8510-CCV16	1735	1511	28084	15297	1098
22:35	MA8510-CCB16	1826	1515	29644	15739	1313
22:39	ZZZZZZ	2036	1721	31997	16927	1153

INTERNAL STANDARD SUMMARY

Login Number: F77897
Account: TETTNOAK - Tetra Tech, Inc
Project: Holloman AFB; Alamogordo, NM

File ID: SA111510M1.ICP Date Analyzed: 11/15/10 Methods: SW846 6010C
Analyst: RS Run ID: MA8510
Parameters: As,Ba,Cd,Cr,Pb,Se,Ag

Time	Sample Description	Istd#1	Istd#2	Istd#3	Istd#4	Istd#5
22:43	ZZZZZZ	2147	1915	34027	18205	1102
22:47	ZZZZZZ	1870	1574	29825	15979	1196
22:51	ZZZZZZ	1997	1941	31717	17144	1100
22:55	ZZZZZZ	2304	2338 !	37018	20062 !	987
23:00	ZZZZZZ	2900 !	2799 !	46207 !	24849 !	993
23:04	ZZZZZZ	2493	2389 !	40300 !	22063 !	981
23:08	ZZZZZZ	1798	1840	29776	16035	986
23:12	MP19483-MB1	1751	1420	28562	15299	1271
23:16	MP19483-B1	1685	1416	27109	14855	1112
23:20	MA8510-CCV17	1769	1534	28360	15352	1105
23:24	MA8510-CCB17	1835	1510	29797	15768	1314
23:28	F77897-1	1349	1080	21110	12566	707 !
23:33	MP19483-D1	1404	1132	21648	12589	740 !
23:37	MP19483-SD1	1665	1368	25682	13974	972
23:41	MP19483-PS1	1362	1153	21441	12620	715 !
23:45	MP19483-S1	1349	1114	20927	12701	688 !
23:49	MP19483-S2	1402	1195	21537	12594	704 !
23:53	F77897-2	1605	1437	24728	13890	779 !
23:57	F77897-3	1724	1585	26858	14996	766 !
00:02	F77897-4	1397	1161	22071	12674	722 !
00:06	F77897-5	1544	1375	24580	14610	747 !
00:10	MA8510-CCV18	1845	1618	28980	15062	1116
00:14	MA8510-CCB18	1951	1625	30184	15164	1320
00:18	F77897-6	1581	1388	24430	14266	764 !
00:22	F77897-7	1455	1194	22703	13232	737 !
00:26	F77897-8	1466	1258	23420	13359	757 !
00:31	F77897-9	1425	1208	22775	13571	725 !
00:35	F77897-10	1402	1164	21855	13156	706 !
00:39	F77897-11	1463	1250	22974	13369	735 !
00:43	F77897-12	1746	1592	27772	16009	763 !
00:48	F77897-13	1424	1192	22166	12803	722 !
00:52	F77897-14	1432	1225	22526	12936	725 !
00:56	F77897-15	1535	1302	23911	14049	762 !

INTERNAL STANDARD SUMMARY

Login Number: F77897
Account: TETTNOAK - Tetra Tech, Inc
Project: Holloman AFB; Alamogordo, NM

File ID: SA111510M1.ICP Date Analyzed: 11/15/10 Methods: SW846 6010C
Analyst: RS Run ID: MA8510
Parameters: As,Ba,Cd,Cr,Pb,Se,Ag

Time	Sample Description	Istd#1	Istd#2	Istd#3	Istd#4	Istd#5
01:00	MA8510-CCV19	1821	1598	28528	15000	1103
01:04	MA8510-CCB19	1956	1612	30508	15238	1315
01:08	F77897-16	1326	1098	20693	12119	679 !
01:13	F77897-17	1546	1411	24137	13790	718 !
01:17	F77897-18	1533	1338	23513	13469	756 !
01:21	F77897-19	1458	1217	22179	12780	709 !
01:25	ZZZZZZ	1830	1680	28020	14472	1004
01:29	MP19481-MB1	1934	1577	29235	14225	1289
01:34	MP19481-B1	1868	1590	28275	14129	1149
01:38	F78023-1	1970	1655	29918	14741	1226
01:42	MP19481-D1	1963	1658	29969	14786	1218
01:46	MP19481-SD1	1985	1667	30393	14652	1293
01:50	MA8510-CCV20	1850	1612	28698	14585	1114
01:54	MA8510-CCB20	1941	1611	29930	14745	1313
01:58	MP19481-PS1	1875	1589	28753	14580	1171
02:02	MP19481-S1	1832	1613	28225	14627	1100
02:06	MP19481-S2	1871	1633	28343	14529	1114
02:10	ZZZZZZ	1960	1661	30365	14981	1221
02:14	ZZZZZZ	1923	1620	30030	15054	1221
02:18	ZZZZZZ	1929	1617	30084	15081	1231
02:22	ZZZZZZ	1914	1633	29694	14999	1210
02:26	ZZZZZZ	1902	1617	29663	15138	1219
02:30	ZZZZZZ	1917	1640	29799	15111	1206
02:34	ZZZZZZ	1907	1667	29844	15122	1197
02:38	MA8510-CCV21	1807	1587	28505	14727	1099
02:42	MA8510-CCB21	1897	1585	29559	14852	1300
02:46	ZZZZZZ	1901	1595	29352	14943	1193
02:51	ZZZZZZ	1924	1611	30071	15173	1210
02:55	ZZZZZZ	1908	1628	29651	15123	1195
02:59	ZZZZZZ	1904	1618	29630	15043	1201
03:03	ZZZZZZ	1891	1618	29675	15160	1197
03:07	ZZZZZZ	1884	1613	29577	15044	1206
03:11	ZZZZZZ	1905	1645	29743	15196	1193

INTERNAL STANDARD SUMMARY

Login Number: F77897
Account: TETTNOAK - Tetra Tech, Inc
Project: Holloman AFB; Alamogordo, NM

File ID: SA111510M1.ICP Date Analyzed: 11/15/10 Methods: SW846 6010C
Analyst: RS Run ID: MA8510
Parameters: As,Ba,Cd,Cr,Pb,Se,Ag

Time	Sample Description	Istd#1	Istd#2	Istd#3	Istd#4	Istd#5
03:15	ZZZZZZ	1913	1640	29762	14919	1196
03:19	ZZZZZZ	1933	1662	29622	14825	1205
03:23	ZZZZZZ	1941	1658	30258	15101	1202
03:27	MA8510-CCV22	1840	1607	28706	14560	1107
03:31	MA8510-CCB22	1930	1598	30058	14765	1306
03:35	ZZZZZZ	1899	1617	29577	14914	1195
03:40	ZZZZZZ	1933	1616	29901	14908	1211
03:44	MP19482-MB1	1915	1557	29941	14611	1293
03:48	MP19482-B1	1832	1532	28249	14357	1146
03:52	F78024-1	1736	1620	27409	14810	979
03:56	MP19482-D1	1702	1685	27169	14682	968
04:01	MP19482-SD1	1841	1582	28821	14789	1157
04:05	MP19482-PS1	1717	1600	27072	14658	965
04:09	MP19482-S1	1710	1704	27122	14825	901
04:13	MP19482-S2	1740	1669	27472	14672	929
04:18	MA8510-CCV23	1857	1605	29019	14709	1118
04:22	MA8510-CCB23	1947	1620	30364	14840	1317
04:26	ZZZZZZ	1906	1612	29631	14984	1196
04:30	ZZZZZZ	1914	1592	29514	14734	1241
04:34	ZZZZZZ	1924	1651	29826	14976	1205
04:38	ZZZZZZ	1903	1613	29332	14972	1138
04:42	ZZZZZZ	1933	1660	29704	14918	1199
04:46	ZZZZZZ	1900	1641	29319	14927	1156
04:50	ZZZZZZ	1940	1630	29906	14880	1230
04:55	ZZZZZZ	1900	1629	29053	14820	1149
04:59	ZZZZZZ	1863	1622	28826	14806	1130
05:03	ZZZZZZ	1928	1632	29687	14851	1195
05:07	MA8510-CCV24	1831	1613	28307	14380	1096
05:11	MA8510-CCB24	1937	1623	29795	14580	1300
05:15	ZZZZZZ	1924	1621	29573	14820	1191
05:19	ZZZZZZ	1917	1635	29417	14763	1192
05:23	ZZZZZZ	1942	1666	29682	14957	1172
05:27	ZZZZZZ	1948	1642	30257	14993	1208

INTERNAL STANDARD SUMMARY

Login Number: F77897
Account: TETTNOAK - Tetra Tech, Inc
Project: Holloman AFB; Alamogordo, NM

File ID: SA111510M1.ICP Date Analyzed: 11/15/10 Methods: SW846 6010C
Analyst: RS Run ID: MA8510
Parameters: As,Ba,Cd,Cr,Pb,Se,Ag

Time	Sample Description	Istd#1	Istd#2	Istd#3	Istd#4	Istd#5
05:31	ZZZZZZ	1953	1642	30058	15006	1208
05:35	ZZZZZZ	1941	1652	29777	14830	1211
05:40	ZZZZZZ	1914	1639	29513	14935	1180
05:44	ZZZZZZ	1944	1659	29859	14929	1198
05:48	ZZZZZZ	1729	1675	26992	14349	935
05:52	MA8510-CRIA2	1941	1639	29698	14631	1257
05:56	MA8510-CCV25	1825	1603	28177	14330	1095
06:00	MA8510-CCB25	1930	1608	29608	14503	1294
06:04	MA8510-ICSA2	1621	1581	25012	13519	901
06:09	MA8510-ICSAB2	1614	1572	24954	13575	898
06:13	MA8510-CCV26	1789	1554	27699	14244	1075
06:17	MA8510-CCB26	1923	1595	29486	14496	1289

R = Reference for ISTD limits. ! = Outside limits.

LEGEND:

Istd#	Parameter	Limits
Istd#1	Yttrium (2243)	60-125 %
Istd#2	Yttrium (2422)	60-125 %
Istd#3	Yttrium (3242)	60-125 %
Istd#4	Yttrium (3710)	60-125 %
Istd#5	Indium	60-125 %

BLANK RESULTS SUMMARY
Part 1 - Initial and Continuing Calibration Blanks

Login Number: F77897
Account: TETTNOAK - Tetra Tech, Inc
Project: Holloman AFB; Alamogordo, NM

File ID: SA111510M1.ICP Date Analyzed: 11/15/10 Methods: SW846 6010C
QC Limits: result < RL Run ID: MA8510 Units: ug/l

Time:			09:57		10:31		11:34		12:22	
Sample ID:			ICB1		CCB1		CCB2		CCB3	
Metal	RL	IDL	raw	final	raw	final	raw	final	raw	final
Aluminum	200	20	anr							
Antimony	6.0	1	anr							
Arsenic	10	1	0.0	<10	-0.10	<10	0.30	<10	-1.0	<10
Barium	200	1	1.0	<200	0.80	<200	1.6	<200	-0.10	<200
Beryllium	4.0	.1	anr							
Cadmium	5.0	.1	-0.10	<5.0	0.0	<5.0	0.0	<5.0	0.0	<5.0
Calcium	1000	50	anr							
Chromium	10	1	0.20	<10	0.10	<10	0.20	<10	0.20	<10
Cobalt	50	1	anr							
Copper	25	1	anr							
Iron	300	34	anr							
Lead	5.0	1	-0.10	<5.0	0.20	<5.0	0.40	<5.0	0.70	<5.0
Magnesium	5000	50	anr							
Manganese	15	1	anr							
Molybdenum	50	1								
Nickel	40	1	anr							
Potassium	10000	50	anr							
Selenium	10	2	-0.10	<10	0.30	<10	1.4	<10	1.8	<10
Silver	10	1	-0.40	<10	-0.10	<10	-0.50	<10	-0.50	<10
Sodium	10000	750	anr							
Strontium	10	1								
Thallium	10	1	anr							
Tin	50	1								
Titanium	10	1.1								
Vanadium	50	1	anr							
Zinc	20	1	anr							

(*) Outside of QC limits
(anr) Analyte not requested

BLANK RESULTS SUMMARY
Part 1 - Initial and Continuing Calibration Blanks

Login Number: F77897
Account: TETTNOAK - Tetra Tech, Inc
Project: Holloman AFB; Alamogordo, NM

File ID: SA111510M1.ICP Date Analyzed: 11/15/10 Methods: SW846 6010C
QC Limits: result < RL Run ID: MA8510 Units: ug/l

Time:			13:13		14:02		14:50		15:39	
Sample ID:			CCB4		CCB5		CCB6		CCB7	
Metal	RL	IDL	raw	final	raw	final	raw	final	raw	final
Aluminum	200	20	anr							
Antimony	6.0	1	anr							
Arsenic	10	1	-0.20	<10	-0.60	<10	-0.10	<10	-1.0	<10
Barium	200	1	0.50	<200	0.50	<200	-0.70	<200	-1.3	<200
Beryllium	4.0	.1	anr							
Cadmium	5.0	.1	0.10	<5.0	0.10	<5.0	0.20	<5.0	0.0	<5.0
Calcium	1000	50	anr							
Chromium	10	1	0.0	<10	0.40	<10	0.40	<10	0.0	<10
Cobalt	50	1	anr							
Copper	25	1	anr							
Iron	300	34	anr							
Lead	5.0	1	0.10	<5.0	-0.20	<5.0	0.40	<5.0	-0.30	<5.0
Magnesium	5000	50	anr							
Manganese	15	1	anr							
Molybdenum	50	1								
Nickel	40	1	anr							
Potassium	10000	50	anr							
Selenium	10	2	-0.40	<10	1.9	<10	1.3	<10	2.5	<10
Silver	10	1	-0.60	<10	-0.50	<10	-0.60	<10	-0.50	<10
Sodium	10000	750	anr							
Strontium	10	1								
Thallium	10	1	anr							
Tin	50	1								
Titanium	10	1.1								
Vanadium	50	1	anr							
Zinc	20	1	anr							

(*) Outside of QC limits
(anr) Analyte not requested

BLANK RESULTS SUMMARY
Part 1 - Initial and Continuing Calibration Blanks

Login Number: F77897
Account: TETTNOAK - Tetra Tech, Inc
Project: Holloman AFB; Alamogordo, NM

File ID: SA111510M1.ICP Date Analyzed: 11/15/10 Methods: SW846 6010C
QC Limits: result < RL Run ID: MA8510 Units: ug/l

Time:			16:01		16:49		17:38		18:28	
Sample ID:			CCB8		CCB9		CCB10		CCB11	
Metal	RL	IDL	raw	final	raw	final	raw	final	raw	final
Aluminum	200	20	anr							
Antimony	6.0	1	anr							
Arsenic	10	1	0.10	<10	-0.20	<10	-0.20	<10	0.10	<10
Barium	200	1	-0.60	<200	-2.1	<200	-1.9	<200	-2.0	<200
Beryllium	4.0	.1	anr							
Cadmium	5.0	.1	0.30	<5.0	0.20	<5.0	0.20	<5.0	0.10	<5.0
Calcium	1000	50	anr							
Chromium	10	1	0.30	<10	0.20	<10	0.10	<10	0.30	<10
Cobalt	50	1	anr							
Copper	25	1	anr							
Iron	300	34	anr							
Lead	5.0	1	0.70	<5.0	-0.30	<5.0	0.50	<5.0	-0.30	<5.0
Magnesium	5000	50	anr							
Manganese	15	1	anr							
Molybdenum	50	1								
Nickel	40	1	anr							
Potassium	10000	50	anr							
Selenium	10	2	1.6	<10	0.90	<10	0.70	<10	0.90	<10
Silver	10	1	0.10	<10	-0.30	<10	-0.20	<10	-0.30	<10
Sodium	10000	750	anr							
Strontium	10	1								
Thallium	10	1	anr							
Tin	50	1								
Titanium	10	1.1								
Vanadium	50	1	anr							
Zinc	20	1	anr							

(*) Outside of QC limits
(anr) Analyte not requested

BLANK RESULTS SUMMARY
Part 1 - Initial and Continuing Calibration Blanks

Login Number: F77897
Account: TETTNOAK - Tetra Tech, Inc
Project: Holloman AFB; Alamogordo, NM

File ID: SA111510M1.ICP Date Analyzed: 11/15/10 Methods: SW846 6010C
QC Limits: result < RL Run ID: MA8510 Units: ug/l

Time:			19:16		20:06		20:58		21:46	
Sample ID:			CCB12		CCB13		CCB14		CCB15	
Metal	RL	IDL	raw	final	raw	final	raw	final	raw	final
Aluminum	200	20	anr							
Antimony	6.0	1	anr							
Arsenic	10	1	0.0	<10	-0.60	<10	0.50	<10	-0.10	<10
Barium	200	1	0.0	<200	-1.9	<200	-1.4	<200	-1.1	<200
Beryllium	4.0	.1	anr							
Cadmium	5.0	.1	0.20	<5.0	0.10	<5.0	0.20	<5.0	0.20	<5.0
Calcium	1000	50	anr							
Chromium	10	1	0.30	<10	0.0	<10	0.10	<10	0.30	<10
Cobalt	50	1	anr							
Copper	25	1	anr							
Iron	300	34	anr							
Lead	5.0	1	-0.30	<5.0	-0.80	<5.0	0.70	<5.0	-0.30	<5.0
Magnesium	5000	50	anr							
Manganese	15	1	anr							
Molybdenum	50	1								
Nickel	40	1	anr							
Potassium	10000	50	anr							
Selenium	10	2	-0.10	<10	0.40	<10	1.7	<10	-1.1	<10
Silver	10	1	-0.30	<10	-0.20	<10	-0.20	<10	-0.40	<10
Sodium	10000	750	anr							
Strontium	10	1								
Thallium	10	1	anr							
Tin	50	1								
Titanium	10	1.1								
Vanadium	50	1	anr							
Zinc	20	1	anr							

(*) Outside of QC limits
(anr) Analyte not requested

BLANK RESULTS SUMMARY
Part 1 - Initial and Continuing Calibration Blanks

Login Number: F77897
Account: TETTNOAK - Tetra Tech, Inc
Project: Holloman AFB; Alamogordo, NM

File ID: SA111510M1.ICP Date Analyzed: 11/15/10 Methods: SW846 6010C
QC Limits: result < RL Run ID: MA8510 Units: ug/l

Time:			22:35		23:24		00:14		01:04	
Sample ID:			CCB16		CCB17		CCB18		CCB19	
Metal	RL	IDL	raw	final	raw	final	raw	final	raw	final
Aluminum	200	20	anr							
Antimony	6.0	1	anr							
Arsenic	10	1	-0.10	<10	-0.50	<10	0.40	<10	0.20	<10
Barium	200	1	-1.9	<200	-2.1	<200	0.90	<200	1.1	<200
Beryllium	4.0	.1	anr							
Cadmium	5.0	.1	0.20	<5.0	0.30	<5.0	0.10	<5.0	0.20	<5.0
Calcium	1000	50	anr							
Chromium	10	1	0.30	<10	0.30	<10	0.10	<10	0.20	<10
Cobalt	50	1	anr							
Copper	25	1	anr							
Iron	300	34	anr							
Lead	5.0	1	0.10	<5.0	-0.50	<5.0	0.0	<5.0	0.50	<5.0
Magnesium	5000	50	anr							
Manganese	15	1	anr							
Molybdenum	50	1								
Nickel	40	1	anr							
Potassium	10000	50	anr							
Selenium	10	2	0.60	<10	1.3	<10	-0.10	<10	-0.70	<10
Silver	10	1	0.0	<10	-0.40	<10	0.0	<10	-0.40	<10
Sodium	10000	750	anr							
Strontium	10	1								
Thallium	10	1	anr							
Tin	50	1								
Titanium	10	1.1								
Vanadium	50	1	anr							
Zinc	20	1	anr							

(*) Outside of QC limits
(anr) Analyte not requested

BLANK RESULTS SUMMARY
Part 1 - Initial and Continuing Calibration Blanks

Login Number: F77897
Account: TETTNOAK - Tetra Tech, Inc
Project: Holloman AFB; Alamogordo, NM

File ID: SA111510M1.ICP Date Analyzed: 11/15/10 Methods: SW846 6010C
QC Limits: result < RL Run ID: MA8510 Units: ug/l

Time:			01:54		02:42		03:31		04:22	
Sample ID:			CCB20		CCB21		CCB22		CCB23	
Metal	RL	IDL	raw	final	raw	final	raw	final	raw	final
Aluminum	200	20	anr							
Antimony	6.0	1	anr							
Arsenic	10	1	0.70	<10	0.10	<10	0.70	<10	0.80	<10
Barium	200	1	3.4	<200	2.8	<200	2.3	<200	2.0	<200
Beryllium	4.0	.1	anr							
Cadmium	5.0	.1	0.20	<5.0	0.20	<5.0	0.40	<5.0	0.0	<5.0
Calcium	1000	50	anr							
Chromium	10	1	0.30	<10	0.50	<10	0.50	<10	-0.20	<10
Cobalt	50	1	anr							
Copper	25	1	anr							
Iron	300	34	anr							
Lead	5.0	1	0.10	<5.0	-0.10	<5.0	0.50	<5.0	-0.50	<5.0
Magnesium	5000	50	anr							
Manganese	15	1	anr							
Molybdenum	50	1								
Nickel	40	1	anr							
Potassium	10000	50	anr							
Selenium	10	2	0.50	<10	1.3	<10	1.3	<10	0.0	<10
Silver	10	1	0.10	<10	-0.10	<10	0.10	<10	0.10	<10
Sodium	10000	750	anr							
Strontium	10	1								
Thallium	10	1	anr							
Tin	50	1								
Titanium	10	1.1								
Vanadium	50	1	anr							
Zinc	20	1	anr							

(*) Outside of QC limits
(anr) Analyte not requested

BLANK RESULTS SUMMARY
Part 1 - Initial and Continuing Calibration Blanks

Login Number: F77897
Account: TETTNOAK - Tetra Tech, Inc
Project: Holloman AFB; Alamogordo, NM

File ID: SA111510M1.ICP Date Analyzed: 11/15/10 Methods: SW846 6010C
QC Limits: result < RL Run ID: MA8510 Units: ug/l

Time:			05:11		06:00		06:17	
Sample ID:			CCB24		CCB25		CCB26	
Metal	RL	IDL	raw	final	raw	final	raw	final
Aluminum	200	20	anr					
Antimony	6.0	1	anr					
Arsenic	10	1	0.30	<10	-0.10	<10	0.60	<10
Barium	200	1	3.3	<200	3.0	<200	3.5	<200
Beryllium	4.0	.1	anr					
Cadmium	5.0	.1	0.10	<5.0	0.10	<5.0	0.10	<5.0
Calcium	1000	50	anr					
Chromium	10	1	0.10	<10	0.20	<10	0.10	<10
Cobalt	50	1	anr					
Copper	25	1	anr					
Iron	300	34	anr					
Lead	5.0	1	-0.20	<5.0	0.90	<5.0	-0.10	<5.0
Magnesium	5000	50	anr					
Manganese	15	1	anr					
Molybdenum	50	1						
Nickel	40	1	anr					
Potassium	10000	50	anr					
Selenium	10	2	-2.2	<10	-0.80	<10	-0.60	<10
Silver	10	1	-0.30	<10	0.0	<10	0.0	<10
Sodium	10000	750	anr					
Strontium	10	1						
Thallium	10	1	anr					
Tin	50	1						
Titanium	10	1.1						
Vanadium	50	1	anr					
Zinc	20	1	anr					

(*) Outside of QC limits
(anr) Analyte not requested

CALIBRATION CHECK STANDARDS SUMMARY
Initial and Continuing Calibration Checks

Login Number: F77897
Account: TETTNOAK - Tetra Tech, Inc
Project: Holloman AFB; Alamogordo, NM

File ID: SA111510M1.ICP Date Analyzed: 11/15/10 Methods: SW846 6010C
QC Limits: 90 to 110 % Recovery Run ID: MA8510 Units: ug/l

Time:		09:47			10:22			11:30	
Sample ID:	ICV	ICV1		CCV	CCV1		CCV	CCV2	
Metal	True	Results	% Rec	True	Results	% Rec	True	Results	% Rec
Aluminum	anr								
Antimony	anr								
Arsenic	2000	1980	99.0	2000	2000	100.0	2000	2040	102.0
Barium	2000	2050	102.5	2000	2060	103.0	2000	2070	103.5
Beryllium	anr								
Cadmium	2000	2050	102.5	2000	2020	101.0	2000	2060	103.0
Calcium	anr								
Chromium	2000	2070	103.5	2000	2050	102.5	2000	2080	104.0
Cobalt	anr								
Copper	anr								
Iron	anr								
Lead	2000	2020	101.0	2000	2000	100.0	2000	1990	99.5
Magnesium	anr								
Manganese	anr								
Molybdenum									
Nickel	anr								
Potassium	anr								
Selenium	2000	2020	101.0	2000	2000	100.0	2000	2070	103.5
Silver	250	247	98.8	250	250	100.0	250	248	99.2
Sodium	anr								
Strontium									
Thallium	anr								
Tin									
Titanium									
Vanadium	anr								
Zinc	anr								

(*) Outside of QC limits
(anr) Analyte not requested

CALIBRATION CHECK STANDARDS SUMMARY
Initial and Continuing Calibration Checks

Login Number: F77897
Account: TETTNOAK - Tetra Tech, Inc
Project: Holloman AFB; Alamogordo, NM

File ID: SA111510M1.ICP Date Analyzed: 11/15/10 Methods: SW846 6010C
QC Limits: 90 to 110 % Recovery Run ID: MA8510 Units: ug/l

Time:		12:18			13:09			13:58	
Sample ID:	CCV	CCV3		CCV	CCV4		CCV	CCV5	
Metal	True	Results	% Rec	True	Results	% Rec	True	Results	% Rec
Aluminum	anr								
Antimony	anr								
Arsenic	2000	2060	103.0	2000	2060	103.0	2000	2080	104.0
Barium	2000	2080	104.0	2000	2070	103.5	2000	2070	103.5
Beryllium	anr								
Cadmium	2000	2050	102.5	2000	2050	102.5	2000	2080	104.0
Calcium	anr								
Chromium	2000	2080	104.0	2000	2100	105.0	2000	2100	105.0
Cobalt	anr								
Copper	anr								
Iron	anr								
Lead	2000	1960	98.0	2000	1950	97.5	2000	1950	97.5
Magnesium	anr								
Manganese	anr								
Molybdenum									
Nickel	anr								
Potassium	anr								
Selenium	2000	2100	105.0	2000	2100	105.0	2000	2130	106.5
Silver	250	247	98.8	250	242	96.8	250	241	96.4
Sodium	anr								
Strontium									
Thallium	anr								
Tin									
Titanium									
Vanadium	anr								
Zinc	anr								

(*) Outside of QC limits
(anr) Analyte not requested

CALIBRATION CHECK STANDARDS SUMMARY
Initial and Continuing Calibration Checks

Login Number: F77897
Account: TETTNOAK - Tetra Tech, Inc
Project: Holloman AFB; Alamogordo, NM

File ID: SA111510M1.ICP Date Analyzed: 11/15/10 Methods: SW846 6010C
QC Limits: 90 to 110 % Recovery Run ID: MA8510 Units: ug/l

Time:		14:47			15:36			15:56	
Sample ID:	CCV	CCV6		CCV	CCV7		CCV	CCV8	
Metal	True	Results	% Rec	True	Results	% Rec	True	Results	% Rec
Aluminum	anr								
Antimony	anr								
Arsenic	2000	2060	103.0	2000	2090	104.5	2000	2000	100.0
Barium	2000	2040	102.0	2000	2070	103.5	2000	2050	102.5
Beryllium	anr								
Cadmium	2000	2060	103.0	2000	2060	103.0	2000	2040	102.0
Calcium	anr								
Chromium	2000	2100	105.0	2000	2100	105.0	2000	2080	104.0
Cobalt	anr								
Copper	anr								
Iron	anr								
Lead	2000	1930	96.5	2000	1910	95.5	2000	2010	100.5
Magnesium	anr								
Manganese	anr								
Molybdenum									
Nickel	anr								
Potassium	anr								
Selenium	2000	2100	105.0	2000	2140	107.0	2000	2000	100.0
Silver	250	239	95.6	250	238	95.2	250	250	100.0
Sodium	anr								
Strontium									
Thallium	anr								
Tin									
Titanium									
Vanadium	anr								
Zinc	anr								

(*) Outside of QC limits
(anr) Analyte not requested

CALIBRATION CHECK STANDARDS SUMMARY
Initial and Continuing Calibration Checks

Login Number: F77897
Account: TETTNOAK - Tetra Tech, Inc
Project: Holloman AFB; Alamogordo, NM

File ID: SA111510M1.ICP Date Analyzed: 11/15/10 Methods: SW846 6010C
QC Limits: 90 to 110 % Recovery Run ID: MA8510 Units: ug/l

Time:		16:45			17:34			18:24	
Sample ID:	CCV	CCV9		CCV	CCV10		CCV	CCV11	
Metal	True	Results	% Rec	True	Results	% Rec	True	Results	% Rec
Aluminum	anr								
Antimony	anr								
Arsenic	2000	1970	98.5	2000	2000	100.0	2000	1940	97.0
Barium	2000	2040	102.0	2000	2070	103.5	2000	2090	104.5
Beryllium	anr								
Cadmium	2000	2020	101.0	2000	2030	101.5	2000	1980	99.0
Calcium	anr								
Chromium	2000	2090	104.5	2000	2090	104.5	2000	2090	104.5
Cobalt	anr								
Copper	anr								
Iron	anr								
Lead	2000	2000	100.0	2000	1990	99.5	2000	1980	99.0
Magnesium	anr								
Manganese	anr								
Molybdenum									
Nickel	anr								
Potassium	anr								
Selenium	2000	1980	99.0	2000	2010	100.5	2000	1930	96.5
Silver	250	251	100.4	250	251	100.4	250	251	100.4
Sodium	anr								
Strontium									
Thallium	anr								
Tin									
Titanium									
Vanadium	anr								
Zinc	anr								

(*) Outside of QC limits
(anr) Analyte not requested

CALIBRATION CHECK STANDARDS SUMMARY
Initial and Continuing Calibration Checks

Login Number: F77897
Account: TETTNOAK - Tetra Tech, Inc
Project: Holloman AFB; Alamogordo, NM

File ID: SA111510M1.ICP Date Analyzed: 11/15/10 Methods: SW846 6010C
QC Limits: 90 to 110 % Recovery Run ID: MA8510 Units: ug/l

Time:		19:12			20:02			20:54	
Sample ID:	CCV	CCV12		CCV	CCV13		CCV	CCV14	
Metal	True	Results	% Rec	True	Results	% Rec	True	Results	% Rec
Aluminum	anr								
Antimony	anr								
Arsenic	2000	1990	99.5	2000	1960	98.0	2000	1970	98.5
Barium	2000	2110	105.5	2000	2100	105.0	2000	2120	106.0
Beryllium	anr								
Cadmium	2000	2000	100.0	2000	1980	99.0	2000	1980	99.0
Calcium	anr								
Chromium	2000	2070	103.5	2000	2080	104.0	2000	2070	103.5
Cobalt	anr								
Copper	anr								
Iron	anr								
Lead	2000	1960	98.0	2000	1970	98.5	2000	1960	98.0
Magnesium	anr								
Manganese	anr								
Molybdenum									
Nickel	anr								
Potassium	anr								
Selenium	2000	2000	100.0	2000	1950	97.5	2000	1970	98.5
Silver	250	251	100.4	250	253	101.2	250	251	100.4
Sodium	anr								
Strontium									
Thallium	anr								
Tin									
Titanium									
Vanadium	anr								
Zinc	anr								

(*) Outside of QC limits
(anr) Analyte not requested

CALIBRATION CHECK STANDARDS SUMMARY
Initial and Continuing Calibration Checks

Login Number: F77897
Account: TETTNOAK - Tetra Tech, Inc
Project: Holloman AFB; Alamogordo, NM

File ID: SA111510M1.ICP Date Analyzed: 11/15/10 Methods: SW846 6010C
QC Limits: 90 to 110 % Recovery Run ID: MA8510 Units: ug/l

Time:		21:42			22:31			23:20	
Sample ID:	CCV	CCV15		CCV	CCV16		CCV	CCV17	
Metal	True	Results	% Rec	True	Results	% Rec	True	Results	% Rec
Aluminum	anr								
Antimony	anr								
Arsenic	2000	1960	98.0	2000	1970	98.5	2000	1940	97.0
Barium	2000	2100	105.0	2000	2100	105.0	2000	2100	105.0
Beryllium	anr								
Cadmium	2000	1970	98.5	2000	1980	99.0	2000	1960	98.0
Calcium	anr								
Chromium	2000	2060	103.0	2000	2070	103.5	2000	2040	102.0
Cobalt	anr								
Copper	anr								
Iron	anr								
Lead	2000	1950	97.5	2000	1950	97.5	2000	1950	97.5
Magnesium	anr								
Manganese	anr								
Molybdenum									
Nickel	anr								
Potassium	anr								
Selenium	2000	1970	98.5	2000	1980	99.0	2000	1940	97.0
Silver	250	250	100.0	250	249	99.6	250	253	101.2
Sodium	anr								
Strontium									
Thallium	anr								
Tin									
Titanium									
Vanadium	anr								
Zinc	anr								

(*) Outside of QC limits
(anr) Analyte not requested

CALIBRATION CHECK STANDARDS SUMMARY
Initial and Continuing Calibration Checks

Login Number: F77897
Account: TETTNOAK - Tetra Tech, Inc
Project: Holloman AFB; Alamogordo, NM

File ID: SA111510M1.ICP Date Analyzed: 11/15/10 Methods: SW846 6010C
QC Limits: 90 to 110 % Recovery Run ID: MA8510 Units: ug/l

Time:		00:10			01:00			01:50	
Sample ID:	CCV	CCV18		CCV	CCV19		CCV	CCV20	
Metal	True	Results	% Rec	True	Results	% Rec	True	Results	% Rec
Aluminum	anr								
Antimony	anr								
Arsenic	2000	1950	97.5	2000	1950	97.5	2000	1920	96.0
Barium	2000	2000	100.0	2000	2060	103.0	2000	2050	102.5
Beryllium	anr								
Cadmium	2000	2030	101.5	2000	2030	101.5	2000	2030	101.5
Calcium	anr								
Chromium	2000	2070	103.5	2000	2060	103.0	2000	2060	103.0
Cobalt	anr								
Copper	anr								
Iron	anr								
Lead	2000	2050	102.5	2000	2030	101.5	2000	2040	102.0
Magnesium	anr								
Manganese	anr								
Molybdenum									
Nickel	anr								
Potassium	anr								
Selenium	2000	1930	96.5	2000	1920	96.0	2000	1900	95.0
Silver	250	250	100.0	250	248	99.2	250	246	98.4
Sodium	anr								
Strontium									
Thallium	anr								
Tin									
Titanium									
Vanadium	anr								
Zinc	anr								

(*) Outside of QC limits
(anr) Analyte not requested

CALIBRATION CHECK STANDARDS SUMMARY
Initial and Continuing Calibration Checks

Login Number: F77897
Account: TETTNOAK - Tetra Tech, Inc
Project: Holloman AFB; Alamogordo, NM

File ID: SA111510M1.ICP Date Analyzed: 11/15/10 Methods: SW846 6010C
QC Limits: 90 to 110 % Recovery Run ID: MA8510 Units: ug/l

Time:		02:38			03:27			04:18	
Sample ID:	CCV	CCV21		CCV	CCV22		CCV	CCV23	
Metal	True	Results	% Rec	True	Results	% Rec	True	Results	% Rec
Aluminum	anr								
Antimony	anr								
Arsenic	2000	1970	98.5	2000	1950	97.5	2000	1950	97.5
Barium	2000	2080	104.0	2000	2070	103.5	2000	2060	103.0
Beryllium	anr								
Cadmium	2000	2060	103.0	2000	2060	103.0	2000	2060	103.0
Calcium	anr								
Chromium	2000	2100	105.0	2000	2090	104.5	2000	2110	105.5
Cobalt	anr								
Copper	anr								
Iron	anr								
Lead	2000	2040	102.0	2000	2060	103.0	2000	2070	103.5
Magnesium	anr								
Manganese	anr								
Molybdenum									
Nickel	anr								
Potassium	anr								
Selenium	2000	1950	97.5	2000	1930	96.5	2000	1920	96.0
Silver	250	248	99.2	250	248	99.2	250	251	100.4
Sodium	anr								
Strontium									
Thallium	anr								
Tin									
Titanium									
Vanadium	anr								
Zinc	anr								

(*) Outside of QC limits
(anr) Analyte not requested

CALIBRATION CHECK STANDARDS SUMMARY
Initial and Continuing Calibration Checks

Login Number: F77897
Account: TETTNOAK - Tetra Tech, Inc
Project: Holloman AFB; Alamogordo, NM

File ID: SA111510M1.ICP Date Analyzed: 11/15/10 Methods: SW846 6010C
QC Limits: 90 to 110 % Recovery Run ID: MA8510 Units: ug/l

Time:		05:07			05:56			06:13	
Sample ID:	CCV	CCV24		CCV	CCV25		CCV	CCV26	
Metal	True	Results	% Rec	True	Results	% Rec	True	Results	% Rec
Aluminum	anr								
Antimony	anr								
Arsenic	2000	1970	98.5	2000	1960	98.0	2000	1970	98.5
Barium	2000	2090	104.5	2000	2090	104.5	2000	2100	105.0
Beryllium	anr								
Cadmium	2000	2080	104.0	2000	2070	103.5	2000	2070	103.5
Calcium	anr								
Chromium	2000	2100	105.0	2000	2070	103.5	2000	2100	105.0
Cobalt	anr								
Copper	anr								
Iron	anr								
Lead	2000	2100	105.0	2000	2080	104.0	2000	2090	104.5
Magnesium	anr								
Manganese	anr								
Molybdenum									
Nickel	anr								
Potassium	anr								
Selenium	2000	1940	97.0	2000	1940	97.0	2000	1950	97.5
Silver	250	254	101.6	250	250	100.0	250	253	101.2
Sodium	anr								
Strontium									
Thallium	anr								
Tin									
Titanium									
Vanadium	anr								
Zinc	anr								

(*) Outside of QC limits
(anr) Analyte not requested

HIGH STANDARD CHECK SUMMARY

Login Number: F77897
Account: TETTNOAK - Tetra Tech, Inc
Project: Holloman AFB; Alamogordo, NM

File ID: SA111510M1.ICP Date Analyzed: 11/15/10 Methods: SW846 6010C
QC Limits: 95 to 105 % Recovery Run ID: MA8510 Units: ug/l

Time:		09:43	
Sample ID:	HSTD	HSTD1	
Metal	True	Results	% Rec
Aluminum	anr		
Antimony	anr		
Arsenic	4000	3990	99.8
Barium	4000	3990	99.8
Beryllium	anr		
Cadmium	4000	3960	99.0
Calcium	anr		
Chromium	4000	3910	97.8
Cobalt	anr		
Copper	anr		
Iron	anr		
Lead	4000	4000	100.0
Magnesium	anr		
Manganese	anr		
Molybdenum			
Nickel	anr		
Potassium	anr		
Selenium	4000	3970	99.3
Silver	500	499	99.8
Sodium	anr		
Strontium			
Thallium	anr		
Tin			
Titanium			
Vanadium	anr		
Zinc	anr		

(*) Outside of QC limits
(anr) Analyte not requested

LOW CALIBRATION CHECK STANDARDS SUMMARY

Login Number: F77897
Account: TETTNOAK - Tetra Tech, Inc
Project: Holloman AFB; Alamogordo, NM

File ID: SA111510M1.ICP Date Analyzed: 11/15/10 Methods: SW846 6010C
QC Limits: CRI 70-130% CRIA 70-130% Run ID: MA8510 Units: ug/l

Time:			10:01		05:52	
Sample ID:	CRI	CRIA	CRIA1		CRIA2	
Metal	True	True	Results	% Rec	Results	% Rec
Aluminum	400	200	anr			
Antimony	10	5.0	anr			
Arsenic	20	10	9.9	99.0	9.9	99.0
Barium	400	200	203	101.5	211	105.5
Beryllium	10	5.0	anr			
Cadmium	10	5.0	5.1	102.0	5.3	106.0
Calcium	2000	1000	anr			
Chromium	20	10	10.9	109.0	11.1	111.0
Cobalt	100	50	anr			
Copper	50	25	anr			
Iron	600	300	anr			
Lead	10	5.0	5.1	102.0	5.6	112.0
Magnesium	10000	5000	anr			
Manganese	30	15	anr			
Molybdenum	100	50				
Nickel	80	40	anr			
Potassium	20000	10000	anr			
Selenium	20	10	9.9	99.0	8.8	88.0
Silver	20	10	8.8	88.0	9.2	92.0
Sodium	20000	10000	anr			
Strontium	20	10				
Thallium	20	10	anr			
Tin	100	50				
Titanium	20	10				
Vanadium	100	50	anr			
Zinc	40	20	anr			

(*) Outside of QC limits
(anr) Analyte not requested

INTERFERING ELEMENT CHECK STANDARDS SUMMARY
Part 1 - ICSA and ICSAB Standards

Login Number: F77897
Account: TETTNOAK - Tetra Tech, Inc
Project: Holloman AFB; Alamogordo, NM

File ID: SA111510M1.ICP Date Analyzed: 11/15/10 Methods: SW846 6010C
QC Limits: 80 to 120 % Recovery Run ID: MA8510 Units: ug/l

Time:			10:10		10:17		06:04		06:09	
Sample ID:	ICSA	ICSAB	ICSA1		ICSAB1		ICSA2		ICSAB2	
Metal	True	True	Results	% Rec	Results	% Rec	Results	% Rec	Results	% Rec
Aluminum	500000	500000	496000	99.2	496000	99.2	495000	99.0	491000	98.2
Antimony		1000	0.0		997	99.7	5.8		965	96.5
Arsenic		1000	-0.40		1020	102.0	3.7		1010	101.0
Barium		500	2.3		522	104.4	4.6		531	106.2
Beryllium		500	-0.10		496	99.2	-0.20		495	99.0
Cadmium		1000	0.80		937	93.7	-1.0		955	95.5
Calcium	500000	500000	450000	90.0	452000	90.4	484000	96.8	480000	96.0
Chromium		500	-0.40		419	83.8	-0.40		425	85.0
Cobalt		500	0.20		487	97.4	0.50		505	101.0
Copper		500	0.60		508	101.6	1.1		486	97.2
Iron	200000	200000	182000	91.0	185000	92.5	189000	94.5	187000	93.5
Lead		1000	0.0		977	97.7	-1.0		1010	101.0
Magnesium	500000	500000	503000	100.6	523000	104.6	518000	103.6	523000	104.6
Manganese		500	0.30		426	85.2	0.30		434	86.8
Molybdenum		1000	0.20		963	96.3	0.50		961	96.1
Nickel		1000	0.0		972	97.2	1.3		1020	102.0
Potassium			-29		-38		-18		-22	
Selenium		1000	0.0		991	99.1	-1.5		957	95.7
Silver		1000	0.50		1100	110.0	0.60		1110	111.0
Sodium			108		-1200		-470		-980	
Strontium		1000	-5.5		-5.5	0.0*	-6.3		-6.2	0.0*
Thallium		1000	1.6		933	93.3	8.8		955	95.5
Tin		1000	3.4		919	91.9	4.4		966	96.6
Titanium		1000	3.5		4.5	0.5*	3.3		3.6	0.4*
Vanadium		500	0.20		432	86.4	0.80		432	86.4
Zinc		1000	-4.3		892	89.2	-4.7		943	94.3

(*) Outside of QC limits
(anr) Analyte not requested

Accutest Laboratories Instrument Runlog
Inorganics Analyses

Login Number: F77897
Account: TETTNOAK - Tetra Tech, Inc
Project: Holloman AFB; Alamogordo, NM

File ID: SA111610M1.ICP Date Analyzed: 11/16/10 Methods: SW846 6010C
Analyst: RS Run ID: MA8512
Parameters: Cr,Pb,Se

Time	Sample Description	Dilution Factor	PS Recov	Comments
09:12	MA8512-STD1	1		STDA
09:16	MA8512-STD2	1		STDB
09:19	MA8512-STD3	1		STDC
09:23	MA8512-HSTD1	1		
09:27	MA8512-ICV1	1		
09:36	MA8512-ICB1	1		
09:40	MA8512-CRIA1	1		
09:51	MA8512-ICSA1	1		
09:58	MA8512-ICSAB1	1		
10:12	MA8512-CCV1	1		
10:21	MA8512-CCB1	1		
10:46	ZZZZZZ	5		
10:51	ZZZZZZ	5		
10:55	ZZZZZZ	1		
10:59	ZZZZZZ	1		
11:03	ZZZZZZ	1		
11:08	F77995-1	2		(sample used for QC only; not part of login F77897)
11:12	MP19484-D1	2		
11:16	MP19484-S1	2		
11:20	MP19484-S2	2		
11:23	MA8512-CCV2	1		
11:27	MA8512-CCB2	1		
11:32	MP19484-PS1	2		
11:36	MP19484-SD1	10		
11:40	F77969-2	2		(sample used for QC only; not part of login F77897)
11:44	MP19479-D1	2		
11:48	MP19479-S1	2		
11:51	MP19479-S2	2		
11:55	MP19479-PS1	2		
11:59	MP19479-SD1	10		
12:03	ZZZZZZ	2		
12:07	F78024-1	2		(sample used for QC only; not part of login F77897)
12:11	MA8512-CCV3	1		

Accutest Laboratories Instrument Runlog
Inorganics Analyses

Login Number: F77897
Account: TETTNOAK - Tetra Tech, Inc
Project: Holloman AFB; Alamogordo, NM

File ID: SA111610M1.ICP Date Analyzed: 11/16/10 Methods: SW846 6010C
Analyst: RS Run ID: MA8512
Parameters: Cr,Pb,Se

Time	Sample Description	Dilution Factor	PS Recov	Comments
12:15	MA8512-CCB3	1		
12:31	MA8512-CCV4	1		
12:39	MA8512-CCB4	1		
12:43	MP19482-D1	4		
12:47	MP19482-D1	2		
12:51	MP19482-S1	2		
12:56	MP19482-S2	2		
13:00	MP19482-PS1	2		
13:04	MP19482-SD1	10		
13:08	ZZZZZZ	4		
13:12	ZZZZZZ	5		
13:16	ZZZZZZ	5		
13:20	ZZZZZZ	5		
13:24	MA8512-CCV5	1		
13:28	MA8512-CCB5	1		
13:32	F77897-1	20		
13:36	MP19483-D1	20		
13:41	MP19483-S1	20		
13:45	MP19483-S2	20		
13:50	MP19483-PS1	20		
13:54	MP19483-SD1	100		
13:58	F77897-2	10		
14:03	F77897-3	10		
14:07	F77897-4	10		
14:11	F77897-5	10		
14:16	MA8512-CCV6	1		
14:20	MA8512-CCB6	1		
14:24	F77897-6	10		
14:28	F77897-7	10		
14:33	F77897-8	10		
14:37	F77897-9	10		
14:46	F77897-11	10		
14:50	F77897-12	10		

Accutest Laboratories Instrument Runlog
Inorganics Analyses

Login Number: F77897
Account: TETTNOAK - Tetra Tech, Inc
Project: Holloman AFB; Alamogordo, NM

File ID: SA111610M1.ICP Date Analyzed: 11/16/10 Methods: SW846 6010C
Analyst: RS Run ID: MA8512
Parameters: Cr,Pb,Se

Time	Sample Description	Dilution Factor	PS Recov	Comments
14:59	F77897-14	10		
15:03	F77897-15	10		
15:07	MA8512-CCV7	1		
15:11	MA8512-CCB7	1		
16:46	MA8512-CCV8	1		
16:51	MA8512-CCB8	1		
16:59	F77897-17	10		
17:04	F77897-18	10		
17:08	F77897-19	10		
17:13	ZZZZZZ	2		
17:17	F75746-4T	4		(sample used for QC only; not part of login F77897)
17:21	MP19457-D1	4		
17:25	MP19457-S1	4		
17:29	MP19457-S2	4		
17:33	MP19457-PS1	4		
17:37	MA8512-CCV9	1		
17:41	MA8512-CCB9	1		
17:45	MP19457-SD1	20		
17:49	ZZZZZZ	4		
18:05	ZZZZZZ	5		
18:09	ZZZZZZ	5		
18:13	ZZZZZZ	5		
18:17	ZZZZZZ	2		
18:22	ZZZZZZ	5		
18:26	MA8512-CCV10	1		
18:30	MA8512-CCB10	1		
18:38	ZZZZZZ	5		
18:42	ZZZZZZ	10		
18:46	ZZZZZZ	5		
18:50	ZZZZZZ	10		
18:54	ZZZZZZ	4		
18:58	ZZZZZZ	5		
19:02	ZZZZZZ	5		

Accutest Laboratories Instrument Runlog
Inorganics Analyses

Login Number: F77897
Account: TETTNOAK - Tetra Tech, Inc
Project: Holloman AFB; Alamogordo, NM

File ID: SA111610M1.ICP Date Analyzed: 11/16/10 Methods: SW846 6010C
Analyst: RS Run ID: MA8512
Parameters: Cr,Pb,Se

Time	Sample Description	Dilution Factor	PS Recov	Comments
19:06	ZZZZZZ	5		
19:10	ZZZZZZ	2		
19:14	MA8512-CCV11	1		
19:18	MA8512-CCB11	1		
19:22	ZZZZZZ	5		
19:26	ZZZZZZ	5		
19:30	ZZZZZZ	2		
19:34	ZZZZZZ	5		
19:38	ZZZZZZ	2		
19:42	ZZZZZZ	4		
19:46	ZZZZZZ	10		
19:50	ZZZZZZ	5		
19:54	ZZZZZZ	2		
19:58	ZZZZZZ	4		
20:02	MA8512-CCV12	1		
20:06	MA8512-CCB12	1		
20:10	ZZZZZZ	4		
20:14	ZZZZZZ	10		
20:18	ZZZZZZ	5		
20:22	ZZZZZZ	5		
20:26	ZZZZZZ	10		
20:30	ZZZZZZ	5		
20:34	ZZZZZZ	5		
20:38	ZZZZZZ	4		
20:43	ZZZZZZ	4		
20:47	ZZZZZZ	4		
20:51	MA8512-CCV13	1		
20:55	MA8512-CCB13	1		
20:59	ZZZZZZ	4		
21:03	ZZZZZZ	5		
21:07	ZZZZZZ	4		
21:11	ZZZZZZ	20		
21:15	ZZZZZZ	10		

Accutest Laboratories Instrument Runlog
Inorganics Analyses

Login Number: F77897
Account: TETTNOAK - Tetra Tech, Inc
Project: Holloman AFB; Alamogordo, NM

File ID: SA111610M1.ICP Date Analyzed: 11/16/10 Methods: SW846 6010C
Analyst: RS Run ID: MA8512
Parameters: Cr,Pb,Se

	Time	Sample Description	Dilution Factor	PS Recov	Comments
	21:19	ZZZZZZ	5		
	21:23	ZZZZZZ	5		
	21:28	F77897-1	4		
	21:32	MP19483-D1	4		
	21:36	MP19483-S1	4		
	21:41	MA8512-CCV14	1		
	21:45	MA8512-CCB14	1		
	21:49	MP19483-S2	4		
	21:53	MP19483-PS1	4		
	21:57	MP19483-SD1	20		
	22:02	F77897-2	4		
	22:06	F77897-3	4		
	22:11	F77897-4	4		
	22:15	F77897-5	4		
	22:19	F77897-6	4		
	22:24	F77897-7	4		
	22:28	F77897-8	4		
---------->	Last reportable sample/prep for job F77897				
	22:32	MA8512-CCV15	1		
	22:36	MA8512-CCB15	1		
	23:24	MA8512-CCV16	1		
	23:28	MA8512-CCB16	1		
	23:37	MA8512-CRIA2	1		
	23:41	MA8512-ICSA2	1		
	23:45	MA8512-ICSAB2	1		
	23:49	MA8512-CCV17	1		
	23:53	MA8512-CCB17	1		
---------->	Last reportable CCB for job F77897				

Refer to raw data for calibration curve and standards.

INTERNAL STANDARD SUMMARY

Login Number: F77897
Account: TETTNOAK - Tetra Tech, Inc
Project: Holloman AFB; Alamogordo, NM

File ID: SA111610M1.ICP Date Analyzed: 11/16/10 Methods: SW846 6010C
Analyst: RS Run ID: MA8512
Parameters: Cr,Pb,Se

Time	Sample Description	Istd#1	Istd#2	Istd#3	Istd#4	Istd#5
09:12	MA8512-STD1	1871	1495	30287	15198	1329
09:16	MA8512-STD2	1721	1438	28394	14803	1077
09:19	MA8512-STD3	1617	1422	27132	14556	989
09:23	MA8512-HSTD1	1633	1427	27159	14500	994
09:27	MA8512-ICV1	1710	1431	28101	14828	1079
09:36	MA8512-ICB1	1781 R	1431 R	29117 R	15128 R	1297 R
09:40	MA8512-CRIA1	1765	1415	28260	14889	1238
09:51	MA8512-ICSA1	1505	1440	25003	13739	874
09:58	MA8512-ICSAB1	1535	1438	25039	13613	879
10:12	MA8512-CCV1	1665	1401	27385	14543	1063
10:21	MA8512-CCB1	1761	1433	29001	15017	1293
10:46	ZZZZZZ	1333	1080	21970	13199	812
10:51	ZZZZZZ	1277	1015	21359	13019	786
10:55	ZZZZZZ	1604	1336	27478	14857	1272
10:59	ZZZZZZ	1604	1304	27075	14611	1269
11:03	ZZZZZZ	1619	1299	27276	14648	1274
11:08	F77995-1	1712	1395	29390	15765	1073
11:12	MP19484-D1	1698	1379	28903	15757	1071
11:16	MP19484-S1	1725	1414	29126	15628	1054
11:20	MP19484-S2	1764	1449	29927	15823	1065
11:23	MA8512-CCV2	1558	1313	26601	14345	1031
11:27	MA8512-CCB2	1612	1332	27380	14679	1244
11:32	MP19484-PS1	1788	1461	29731	15965	1094
11:36	MP19484-SD1	1711	1383	28649	15186	1215
11:40	F77969-2	1651	1643	27833	14429	1050
11:44	MP19479-D1	1651	1708	27906	14404	1037
11:48	MP19479-S1	1654	1648	27633	14233	1033
11:51	MP19479-S2	1665	1705	28100	14394	1030
11:55	MP19479-PS1	1643	1651	27877	14531	1047
11:59	MP19479-SD1	1644	1439	27733	14699	1163
12:03	ZZZZZZ	1663	1671	27766	14277	1060
12:07	F78024-1	1511	1292	26193	14284	986
12:11	MA8512-CCV3	1576	1328	26987	14455	1050

INTERNAL STANDARD SUMMARY

Login Number: F77897
Account: TETTNOAK - Tetra Tech, Inc
Project: Holloman AFB; Alamogordo, NM

File ID: SA111610M1.ICP Date Analyzed: 11/16/10 Methods: SW846 6010C
Analyst: RS Run ID: MA8512
Parameters: Cr,Pb,Se

Time	Sample Description	Istd#1	Istd#2	Istd#3	Istd#4	Istd#5
12:15	MA8512-CCB3	1643	1345	28032	14896	1277
12:31	MA8512-CCV4	1558	1320	26501	14290	1043
12:39	MA8512-CCB4	1674	1346	28385	14952	1288
12:43	MP19482-D1	1440	1248	25483	14228	1023
12:47	MP19482-D1	1445	1294	25041	13916	970
12:51	MP19482-S1	1502	1329	25954	13922	924
12:56	MP19482-S2	1500	1321	26002	14025	938
13:00	MP19482-PS1	1518	1308	25891	14091	993
13:04	MP19482-SD1	1639	1343	27996	14723	1169
13:08	ZZZZZZ	1541	1327	26542	14293	1031
13:12	ZZZZZZ	1742	1551	29408	15448	1125
13:16	ZZZZZZ	1903	1664	31795	16544	1140
13:20	ZZZZZZ	1805	1573	30628	16006	1133
13:24	MA8512-CCV5	1582	1336	27038	14406	1060
13:28	MA8512-CCB5	1652	1347	27991	14768	1286
13:32	F77897-1	1518	1233	25705	13984	1065
13:36	MP19483-D1	1527	1238	26230	14319	1073
13:41	MP19483-S1	1479	1188	25188	14101	1031
13:45	MP19483-S2	1486	1204	25248	13987	1040
13:50	MP19483-PS1	1531	1225	25699	13994	1063
13:54	MP19483-SD1	1591	1287	27163	14463	1174
13:58	F77897-2	1459	1211	25212	13801	992
14:03	F77897-3	1491	1223	25199	13930	995
14:07	F77897-4	1465	1172	24874	13723	982
14:11	F77897-5	1452	1191	24881	13940	983
14:16	MA8512-CCV6	1571	1327	26552	14064	1051
14:20	MA8512-CCB6	1640	1341	28039	14611	1262
14:24	F77897-6	1467	1197	25105	13955	993
14:28	F77897-7	1498	1215	25265	13816	1002
14:33	F77897-8	1541	1227	25760	13971	1024
14:37	F77897-9	1494	1215	25337	14025	999
14:46	F77897-11	1597	1274	26128	14042	1043
14:50	F77897-12	1435	1279	26450	14411	942

INTERNAL STANDARD SUMMARY

Login Number: F77897
Account: TETTNOAK - Tetra Tech, Inc
Project: Holloman AFB; Alamogordo, NM

File ID: SA111610M1.ICP Date Analyzed: 11/16/10 Methods: SW846 6010C
Analyst: RS Run ID: MA8512
Parameters: Cr,Pb,Se

Time	Sample Description	Istd#1	Istd#2	Istd#3	Istd#4	Istd#5
14:59	F77897-14	1586	1280	26001	14012	1038
15:03	F77897-15	1623	1331	26671	14165	1070
15:07	MA8512-CCV7	1742	1459	28660	14631	1117
15:11	MA8512-CCB7	1794	1469	29642	15089	1334
16:46	MA8512-CCV8	1924	1655	29429	13822	1164
16:51	MA8512-CCB8	2057	1685	31358	13954	1395
16:59	F77897-17	1832	1510	28232	13717	1096
17:04	F77897-18	1868	1554	28512	13799	1134
17:08	F77897-19	1862	1514	28438	13491	1106
17:13	ZZZZZZ	1946	1687	30394	14378	1146
17:17	F75746-4T	2146	1907 !	33105	15580	1143
17:21	MP19457-D1	2157	1882 !	32900	15384	1182
17:25	MP19457-S1	2270 !	1983 !	34683	16220	1138
17:29	MP19457-S2	2213	1957 !	34180	15950	1136
17:33	MP19457-PS1	2162	1909 !	33212	15660	1150
17:37	MA8512-CCV9	1946	1693	29726	13782	1177
17:41	MA8512-CCB9	2081	1703	31626	13944	1409
17:45	MP19457-SD1	2089	1735	31852	14501	1298
17:49	ZZZZZZ	2237 !	1976 !	34178	15974	1189
18:05	ZZZZZZ	2239 !	1976 !	34451	16119	1231
18:09	ZZZZZZ	2248 !	1947 !	34779	16698	1132
18:13	ZZZZZZ	2175	1885 !	33465	15856	1184
18:17	ZZZZZZ	2202	2193 !	35763	17155	1046
18:22	ZZZZZZ	2258 !	1951 !	35871	17472	1159
18:26	MA8512-CCV10	1873	1635	29558	14598	1163
18:30	MA8512-CCB10	1986	1646	30634	14342	1382
18:38	ZZZZZZ	2237 !	1980 !	34678	16509	1227
18:42	ZZZZZZ	2242 !	1935 !	35358	16846	1219
18:46	ZZZZZZ	2279 !	2022 !	35640	17291	1217
18:50	ZZZZZZ	2250 !	1924 !	35129	16731	1260
18:54	ZZZZZZ	2128	1854 !	33561	16565	1117
18:58	ZZZZZZ	2199	1970 !	34789	16998	1197
19:02	ZZZZZZ	2216	1933 !	34468	16664	1243

INTERNAL STANDARD SUMMARY

Login Number: F77897
Account: TETTNOAK - Tetra Tech, Inc
Project: Holloman AFB; Alamogordo, NM

File ID: SA111610M1.ICP Date Analyzed: 11/16/10 Methods: SW846 6010C
Analyst: RS Run ID: MA8512
Parameters: Cr,Pb,Se

Time	Sample Description	Istd#1	Istd#2	Istd#3	Istd#4	Istd#5
19:06	ZZZZZZ	2223	1885 !	34696	16614	1248
19:10	ZZZZZZ	2300 !	2136 !	36357	17999	1109
19:14	MA8512-CCV11	1870	1613	29614	14703	1158
19:18	MA8512-CCB11	1962	1625	30540	14659	1372
19:22	ZZZZZZ	2253 !	1973 !	35088	16930	1176
19:26	ZZZZZZ	2206	1910 !	34938	17023	1239
19:30	ZZZZZZ	2236 !	2001 !	35329	17671	1175
19:34	ZZZZZZ	2146	1902 !	33857	16677	1137
19:38	ZZZZZZ	2171	2116 !	34901	17248	1100
19:42	ZZZZZZ	2084	1831 !	33831	17203	1082
19:46	ZZZZZZ	2104	1813 !	33909	17155	1168
19:50	ZZZZZZ	2164	1873 !	34446	17345	1170
19:54	ZZZZZZ	2243 !	1991 !	36074	18146	1129
19:58	ZZZZZZ	2100	1850 !	34121	17138	1198
20:02	MA8512-CCV12	1826	1577	29424	15068	1145
20:06	MA8512-CCB12	1930	1585	30986	15228	1372
20:10	ZZZZZZ	2105	1955 !	34093	17101	1177
20:14	ZZZZZZ	2049	1726	33342	17134	1201
20:18	ZZZZZZ	2099	1820 !	33915	17310	1195
20:22	ZZZZZZ	2024	1769	32935	16894	1201
20:26	ZZZZZZ	2031	1707	32805	17037	1129
20:30	ZZZZZZ	2150	1895 !	34798	17690	1199
20:34	ZZZZZZ	2026	1809 !	33350	17190	1161
20:38	ZZZZZZ	2020	1777	33115	17664	1062
20:43	ZZZZZZ	1947	1709	31766	16795	997
20:47	ZZZZZZ	2064	1825 !	34062	17637	1136
20:51	MA8512-CCV13	1762	1512	28867	15225	1127
20:55	MA8512-CCB13	1847	1508	29480	15088	1332
20:59	ZZZZZZ	1974	1806 !	31461	16632	1008
21:03	ZZZZZZ	2101	1806 !	34815	18213	1056
21:07	ZZZZZZ	2006	1777	33169	17432	1122
21:11	ZZZZZZ	2028	1712	33562	17388	1237
21:15	ZZZZZZ	2011	1720	32853	17049	1221

INTERNAL STANDARD SUMMARY

Login Number: F77897
Account: TETTNOAK - Tetra Tech, Inc
Project: Holloman AFB; Alamogordo, NM

File ID: SA111610M1.ICP Date Analyzed: 11/16/10 Methods: SW846 6010C
Analyst: RS Run ID: MA8512
Parameters: Cr,Pb,Se

Time	Sample Description	Istd#1	Istd#2	Istd#3	Istd#4	Istd#5
21:19	ZZZZZZ	1981	1678	31896	16913	1114
21:23	ZZZZZZ	1837	1588	30858	16667	1035
21:28	F77897-1	1267	1091	23343	14295	843
21:32	MP19483-D1	1331	1098	23821	14388	879
21:36	MP19483-S1	1284	1022	22852	14013	834
21:41	MA8512-CCV14	1602	1368	27758	15427	1057
21:45	MA8512-CCB14	1684	1395	29260	15805	1276
21:49	MP19483-S2	1305	1038	22703	14113	844
21:53	MP19483-PS1	1356	1064	23021	13906	871
21:57	MP19483-SD1	1510	1246	26946	15028	1057
22:02	F77897-2	1395	1176	24865	14807	900
22:06	F77897-3	1471	1238	25517	15124	914
22:11	F77897-4	1410	1090	23554	14404	895
22:15	F77897-5	1465	1260	25556	15011	907
22:19	F77897-6	1436	1189	24776	14969	908
22:24	F77897-7	1425	1104	23870	14399	897
22:28	F77897-8	1471	1232	26005	14945	930
22:32	MA8512-CCV15	1623	1370	27720	15420	1065
22:36	MA8512-CCB15	1711	1395	29306	15891	1288
23:24	MA8512-CCV16	1619	1391	28175	15988	1072
23:28	MA8512-CCB16	1679	1381	28900	15983	1252
23:37	MA8512-CRIA2	1786	1468	30438	16581	1265
23:41	MA8512-ICSA2	1465	1345	24593	14724	876
23:45	MA8512-ICSAB2	1445	1374	24932	14544	866
23:49	MA8512-CCV17	1667	1443	28562	15615	1085
23:53	MA8512-CCB17	1789	1468	30748	16529	1323

R = Reference for ISTD limits. ! = Outside limits.

LEGEND:

Istd#	Parameter	Limits
Istd#1	Yttrium (2243)	60-125 %
Istd#2	Yttrium (2422)	60-125 %
Istd#3	Yttrium (3242)	60-125 %
Istd#4	Yttrium (3710)	60-125 %
Istd#5	Indium	60-125 %

BLANK RESULTS SUMMARY
Part 1 - Initial and Continuing Calibration Blanks

Login Number: F77897
Account: TETTNOAK - Tetra Tech, Inc
Project: Holloman AFB; Alamogordo, NM

File ID: SA111610M1.ICP Date Analyzed: 11/16/10 Methods: SW846 6010C
QC Limits: result < RL Run ID: MA8512 Units: ug/l

Time:			09:36		10:21		11:27		12:15	
Sample ID:			ICB1		CCB1		CCB2		CCB3	
Metal	RL	IDL	raw	final	raw	final	raw	final	raw	final
Aluminum	200	20	anr							
Antimony	6.0	1	anr							
Arsenic	10	1	anr							
Barium	200	1	anr							
Beryllium	4.0	.1	anr							
Cadmium	5.0	.1	anr							
Calcium	1000	50	anr							
Chromium	10	1	-0.30	<10	-0.30	<10	-0.30	<10	-0.10	<10
Cobalt	50	1								
Copper	25	1	anr							
Iron	300	34	anr							
Lead	5.0	1	0.20	<5.0	-0.50	<5.0	-0.20	<5.0	-0.20	<5.0
Magnesium	5000	50	anr							
Manganese	15	1	anr							
Molybdenum	50	1								
Nickel	40	1	anr							
Potassium	10000	50	anr							
Selenium	10	2	1.4	<10	1.8	<10	2.5	<10	2.1	<10
Silver	10	1	anr							
Sodium	10000	750	anr							
Strontium	10	1								
Thallium	10	1	anr							
Tin	50	1								
Titanium	10	1.1								
Vanadium	50	1	anr							
Zinc	20	1	anr							

(*) Outside of QC limits
(anr) Analyte not requested

BLANK RESULTS SUMMARY
Part 1 - Initial and Continuing Calibration Blanks

Login Number: F77897
Account: TETTNOAK - Tetra Tech, Inc
Project: Holloman AFB; Alamogordo, NM

File ID: SA111610M1.ICP Date Analyzed: 11/16/10 Methods: SW846 6010C
QC Limits: result < RL Run ID: MA8512 Units: ug/l

Time:			12:39		13:28		14:20		15:11	
Sample ID:			CCB4		CCB5		CCB6		CCB7	
Metal	RL	IDL	raw	final	raw	final	raw	final	raw	final
Aluminum	200	20	anr							
Antimony	6.0	1	anr							
Arsenic	10	1	anr							
Barium	200	1	anr							
Beryllium	4.0	.1	anr							
Cadmium	5.0	.1	anr							
Calcium	1000	50	anr							
Chromium	10	1	0.20	<10	-0.50	<10	-0.20	<10	0.0	<10
Cobalt	50	1								
Copper	25	1	anr							
Iron	300	34	anr							
Lead	5.0	1	-1.0	<5.0	-1.4	<5.0	-1.6	<5.0	0.0	<5.0
Magnesium	5000	50	anr							
Manganese	15	1	anr							
Molybdenum	50	1								
Nickel	40	1	anr							
Potassium	10000	50	anr							
Selenium	10	2	-1.3	<10	-0.80	<10	-0.20	<10	-0.30	<10
Silver	10	1	anr							
Sodium	10000	750	anr							
Strontium	10	1								
Thallium	10	1	anr							
Tin	50	1								
Titanium	10	1.1								
Vanadium	50	1	anr							
Zinc	20	1	anr							

(*) Outside of QC limits
(anr) Analyte not requested

BLANK RESULTS SUMMARY
Part 1 - Initial and Continuing Calibration Blanks

Login Number: F77897
Account: TETTNOAK - Tetra Tech, Inc
Project: Holloman AFB; Alamogordo, NM

File ID: SA111610M1.ICP Date Analyzed: 11/16/10 Methods: SW846 6010C
QC Limits: result < RL Run ID: MA8512 Units: ug/l

Time:			16:51		17:41		18:30		19:18	
Sample ID:			CCB8		CCB9		CCB10		CCB11	
Metal	RL	IDL	raw	final	raw	final	raw	final	raw	final
Aluminum	200	20	anr							
Antimony	6.0	1	anr							
Arsenic	10	1	anr							
Barium	200	1	anr							
Beryllium	4.0	.1	anr							
Cadmium	5.0	.1	anr							
Calcium	1000	50	anr							
Chromium	10	1	0.40	<10	0.50	<10	0.30	<10	0.30	<10
Cobalt	50	1								
Copper	25	1	anr							
Iron	300	34	anr							
Lead	5.0	1	-0.40	<5.0	-0.10	<5.0	-0.30	<5.0	-0.70	<5.0
Magnesium	5000	50	anr							
Manganese	15	1	anr							
Molybdenum	50	1								
Nickel	40	1	anr							
Potassium	10000	50	anr							
Selenium	10	2	-1.6	<10	0.20	<10	-2.6	<10	-0.30	<10
Silver	10	1	anr							
Sodium	10000	750	anr							
Strontium	10	1								
Thallium	10	1	anr							
Tin	50	1								
Titanium	10	1.1								
Vanadium	50	1	anr							
Zinc	20	1	anr							

(*) Outside of QC limits
(anr) Analyte not requested

BLANK RESULTS SUMMARY
Part 1 - Initial and Continuing Calibration Blanks

Login Number: F77897
Account: TETTNOAK - Tetra Tech, Inc
Project: Holloman AFB; Alamogordo, NM

File ID: SA111610M1.ICP Date Analyzed: 11/16/10 Methods: SW846 6010C
QC Limits: result < RL Run ID: MA8512 Units: ug/l

Time:			20:06		20:55		21:45		22:36	
Sample ID:			CCB12		CCB13		CCB14		CCB15	
Metal	RL	IDL	raw	final	raw	final	raw	final	raw	final
Aluminum	200	20	anr							
Antimony	6.0	1	anr							
Arsenic	10	1	anr							
Barium	200	1	anr							
Beryllium	4.0	.1	anr							
Cadmium	5.0	.1	anr							
Calcium	1000	50	anr							
Chromium	10	1	0.50	<10	0.40	<10	0.70	<10	0.60	<10
Cobalt	50	1								
Copper	25	1	anr							
Iron	300	34	anr							
Lead	5.0	1	-0.80	<5.0	-0.60	<5.0	-1.7	<5.0	-0.90	<5.0
Magnesium	5000	50	anr							
Manganese	15	1	anr							
Molybdenum	50	1								
Nickel	40	1	anr							
Potassium	10000	50	anr							
Selenium	10	2	-0.90	<10	0.30	<10	-1.6	<10	-1.5	<10
Silver	10	1	anr							
Sodium	10000	750	anr							
Strontium	10	1								
Thallium	10	1	anr							
Tin	50	1								
Titanium	10	1.1								
Vanadium	50	1	anr							
Zinc	20	1	anr							

(*) Outside of QC limits
(anr) Analyte not requested

BLANK RESULTS SUMMARY
Part 1 - Initial and Continuing Calibration Blanks

Login Number: F77897
Account: TETTNOAK - Tetra Tech, Inc
Project: Holloman AFB; Alamogordo, NM

File ID: SA111610M1.ICP Date Analyzed: 11/16/10 Methods: SW846 6010C
QC Limits: result < RL Run ID: MA8512 Units: ug/l

Time:			23:28		23:53	
Sample ID:			CCB16		CCB17	
Metal	RL	IDL	raw	final	raw	final
Aluminum	200	20	anr			
Antimony	6.0	1	anr			
Arsenic	10	1	anr			
Barium	200	1	anr			
Beryllium	4.0	.1	anr			
Cadmium	5.0	.1	anr			
Calcium	1000	50	anr			
Chromium	10	1	0.40	<10	0.60	<10
Cobalt	50	1				
Copper	25	1	anr			
Iron	300	34	anr			
Lead	5.0	1	-0.60	<5.0	-1.3	<5.0
Magnesium	5000	50	anr			
Manganese	15	1	anr			
Molybdenum	50	1				
Nickel	40	1	anr			
Potassium	10000	50	anr			
Selenium	10	2	-1.1	<10	0.10	<10
Silver	10	1	anr			
Sodium	10000	750	anr			
Strontium	10	1				
Thallium	10	1	anr			
Tin	50	1				
Titanium	10	1.1				
Vanadium	50	1	anr			
Zinc	20	1	anr			

(*) Outside of QC limits
(anr) Analyte not requested

CALIBRATION CHECK STANDARDS SUMMARY
Initial and Continuing Calibration Checks

Login Number: F77897
Account: TETTNOAK - Tetra Tech, Inc
Project: Holloman AFB; Alamogordo, NM

File ID: SA111610M1.ICP Date Analyzed: 11/16/10 Methods: SW846 6010C
QC Limits: 90 to 110 % Recovery Run ID: MA8512 Units: ug/l

Time:		09:27			10:12			11:23	
Sample ID:	ICV	ICV1		CCV	CCV1		CCV	CCV2	
Metal	True	Results	% Rec	True	Results	% Rec	True	Results	% Rec
Aluminum	anr								
Antimony	anr								
Arsenic	anr								
Barium	anr								
Beryllium	anr								
Cadmium	anr								
Calcium	anr								
Chromium	2000	2050	102.5	2000	2060	103.0	2000	2080	104.0
Cobalt									
Copper	anr								
Iron	anr								
Lead	2000	2020	101.0	2000	1980	99.0	2000	1930	96.5
Magnesium	anr								
Manganese	anr								
Molybdenum									
Nickel	anr								
Potassium	anr								
Selenium	2000	2010	100.5	2000	2000	100.0	2000	2070	103.5
Silver	anr								
Sodium	anr								
Strontium									
Thallium	anr								
Tin									
Titanium									
Vanadium	anr								
Zinc	anr								

(*) Outside of QC limits
(anr) Analyte not requested

CALIBRATION CHECK STANDARDS SUMMARY
Initial and Continuing Calibration Checks

Login Number: F77897
Account: TETTNOAK - Tetra Tech, Inc
Project: Holloman AFB; Alamogordo, NM

File ID: SA111610M1.ICP Date Analyzed: 11/16/10 Methods: SW846 6010C
QC Limits: 90 to 110 % Recovery Run ID: MA8512 Units: ug/l

Time:		12:11			12:31			13:24	
Sample ID:	CCV	CCV3		CCV	CCV4		CCV	CCV5	
Metal	True	Results	% Rec	True	Results	% Rec	True	Results	% Rec
Aluminum	anr								
Antimony	anr								
Arsenic	anr								
Barium	anr								
Beryllium	anr								
Cadmium	anr								
Calcium	anr								
Chromium	2000	2080	104.0	2000	2070	103.5	2000	2090	104.5
Cobalt									
Copper	anr								
Iron	anr								
Lead	2000	1920	96.0	2000	2000	100.0	2000	2010	100.5
Magnesium	anr								
Manganese	anr								
Molybdenum									
Nickel	anr								
Potassium	anr								
Selenium	2000	2070	103.5	2000	1980	99.0	2000	1990	99.5
Silver	anr								
Sodium	anr								
Strontium									
Thallium	anr								
Tin									
Titanium									
Vanadium	anr								
Zinc	anr								

(*) Outside of QC limits
(anr) Analyte not requested

CALIBRATION CHECK STANDARDS SUMMARY
Initial and Continuing Calibration Checks

Login Number: F77897
Account: TETTNOAK - Tetra Tech, Inc
Project: Holloman AFB; Alamogordo, NM

File ID: SA111610M1.ICP Date Analyzed: 11/16/10 Methods: SW846 6010C
QC Limits: 90 to 110 % Recovery Run ID: MA8512 Units: ug/l

Time:		14:16			15:07			16:46	
Sample ID:	CCV	CCV6		CCV	CCV7		CCV	CCV8	
Metal	True	Results	% Rec	True	Results	% Rec	True	Results	% Rec
Aluminum	anr								
Antimony	anr								
Arsenic	anr								
Barium	anr								
Beryllium	anr								
Cadmium	anr								
Calcium	anr								
Chromium	2000	2080	104.0	2000	2040	102.0	2000	2100	105.0
Cobalt									
Copper	anr								
Iron	anr								
Lead	2000	1990	99.5	2000	2030	101.5	2000	2010	100.5
Magnesium	anr								
Manganese	anr								
Molybdenum									
Nickel	anr								
Potassium	anr								
Selenium	2000	1970	98.5	2000	1860	93.0	2000	2010	100.5
Silver	anr								
Sodium	anr								
Strontium									
Thallium	anr								
Tin									
Titanium									
Vanadium	anr								
Zinc	anr								

(*) Outside of QC limits
(anr) Analyte not requested

CALIBRATION CHECK STANDARDS SUMMARY
Initial and Continuing Calibration Checks

Login Number: F77897
Account: TETTNOAK - Tetra Tech, Inc
Project: Holloman AFB; Alamogordo, NM

File ID: SA111610M1.ICP Date Analyzed: 11/16/10 Methods: SW846 6010C
QC Limits: 90 to 110 % Recovery Run ID: MA8512 Units: ug/l

Time:		17:37			18:26			19:14	
Sample ID:	CCV	CCV9		CCV	CCV10		CCV	CCV11	
Metal	True	Results	% Rec	True	Results	% Rec	True	Results	% Rec
Aluminum	anr								
Antimony	anr								
Arsenic	anr								
Barium	anr								
Beryllium	anr								
Cadmium	anr								
Calcium	anr								
Chromium	2000	2080	104.0	2000	2060	103.0	2000	2070	103.5
Cobalt									
Copper	anr								
Iron	anr								
Lead	2000	2000	100.0	2000	1940	97.0	2000	1940	97.0
Magnesium	anr								
Manganese	anr								
Molybdenum									
Nickel	anr								
Potassium	anr								
Selenium	2000	1990	99.5	2000	2050	102.5	2000	2050	102.5
Silver	anr								
Sodium	anr								
Strontium									
Thallium	anr								
Tin									
Titanium									
Vanadium	anr								
Zinc	anr								

(*) Outside of QC limits
(anr) Analyte not requested

CALIBRATION CHECK STANDARDS SUMMARY
Initial and Continuing Calibration Checks

Login Number: F77897
Account: TETTNOAK - Tetra Tech, Inc
Project: Holloman AFB; Alamogordo, NM

File ID: SA111610M1.ICP Date Analyzed: 11/16/10 Methods: SW846 6010C
QC Limits: 90 to 110 % Recovery Run ID: MA8512 Units: ug/l

Time:		20:02			20:51			21:41	
Sample ID:	CCV	CCV12		CCV	CCV13		CCV	CCV14	
Metal	True	Results	% Rec	True	Results	% Rec	True	Results	% Rec
Aluminum	anr								
Antimony	anr								
Arsenic	anr								
Barium	anr								
Beryllium	anr								
Cadmium	anr								
Calcium	anr								
Chromium	2000	2060	103.0	2000	2060	103.0	2000	2110	105.5
Cobalt									
Copper	anr								
Iron	anr								
Lead	2000	1900	95.0	2000	1860	93.0	2000	1810	90.5
Magnesium	anr								
Manganese	anr								
Molybdenum									
Nickel	anr								
Potassium	anr								
Selenium	2000	2080	104.0	2000	2100	105.0	2000	2210	110.5*(a
Silver	anr								
Sodium	anr								
Strontium									
Thallium	anr								
Tin									
Titanium									
Vanadium	anr								
Zinc	anr								

(*) Outside of QC limits
(anr) Analyte not requested
(a) No samples for Se reported in the area bracketed by this QC.

CALIBRATION CHECK STANDARDS SUMMARY
Initial and Continuing Calibration Checks

Login Number: F77897
Account: TETTNOAK - Tetra Tech, Inc
Project: Holloman AFB; Alamogordo, NM

File ID: SA111610M1.ICP Date Analyzed: 11/16/10 Methods: SW846 6010C
QC Limits: 90 to 110 % Recovery Run ID: MA8512 Units: ug/l

Time:		22:32			23:24			23:49	
Sample ID:	CCV	CCV15		CCV	CCV16		CCV	CCV17	
Metal	True	Results	% Rec	True	Results	% Rec	True	Results	% Rec
Aluminum	anr								
Antimony	anr								
Arsenic	anr								
Barium	anr								
Beryllium	anr								
Cadmium	anr								
Calcium	anr								
Chromium	2000	2090	104.5	2000	2060	103.0	2000	2050	102.5
Cobalt									
Copper	anr								
Iron	anr								
Lead	2000	1810	90.5	2000	1750	87.5*(a)	2000	1810	90.5
Magnesium	anr								
Manganese	anr								
Molybdenum									
Nickel	anr								
Potassium	anr								
Selenium	2000	2190	109.5	2000	2170	108.5	2000	2140	107.0
Silver	anr								
Sodium	anr								
Strontium									
Thallium	anr								
Tin									
Titanium									
Vanadium	anr								
Zinc	anr								

(*) Outside of QC limits
(anr) Analyte not requested
(a) No samples for Pb reported in the area bracketed by this QC.

HIGH STANDARD CHECK SUMMARY

Login Number: F77897
Account: TETTNOAK - Tetra Tech, Inc
Project: Holloman AFB; Alamogordo, NM

File ID: SA111610M1.ICP Date Analyzed: 11/16/10 Methods: SW846 6010C
QC Limits: 95 to 105 % Recovery Run ID: MA8512 Units: ug/l

Time:		09:23	
Sample ID:	HSTD	HSTD1	
Metal	True	Results	% Rec
Aluminum	anr		
Antimony	anr		
Arsenic	anr		
Barium	anr		
Beryllium	anr		
Cadmium	anr		
Calcium	anr		
Chromium	4000	3880	97.0
Cobalt			
Copper	anr		
Iron	anr		
Lead	4000	3980	99.5
Magnesium	anr		
Manganese	anr		
Molybdenum			
Nickel	anr		
Potassium	anr		
Selenium	4000	3970	99.3
Silver	anr		
Sodium	anr		
Strontium			
Thallium	anr		
Tin			
Titanium			
Vanadium	anr		
Zinc	anr		

(*) Outside of QC limits
(anr) Analyte not requested

LOW CALIBRATION CHECK STANDARDS SUMMARY

Login Number: F77897
Account: TETTNOAK - Tetra Tech, Inc
Project: Holloman AFB; Alamogordo, NM

File ID: SA111610M1.ICP Date Analyzed: 11/16/10 Methods: SW846 6010C
QC Limits: CRI 70-130% CRIA 70-130% Run ID: MA8512 Units: ug/l

Time:			09:40		23:37	
Sample ID:	CRI	CRIA	CRIA1		CRIA2	
Metal	True	True	Results	% Rec	Results	% Rec
Aluminum	400	200	anr			
Antimony	10	5.0	anr			
Arsenic	20	10	anr			
Barium	400	200	anr			
Beryllium	10	5.0	anr			
Cadmium	10	5.0	anr			
Calcium	2000	1000	anr			
Chromium	20	10	10.8	108.0	11.3	113.0
Cobalt	100	50				
Copper	50	25	anr			
Iron	600	300	anr			
Lead	10	5.0	4.5	90.0	2.5	50.0*(a)
Magnesium	10000	5000	anr			
Manganese	30	15	anr			
Molybdenum	100	50				
Nickel	80	40	anr			
Potassium	20000	10000	anr			
Selenium	20	10	10.8	108.0	9.9	99.0
Silver	20	10	anr			
Sodium	20000	10000	anr			
Strontium	20	10				
Thallium	20	10	anr			
Tin	100	50				
Titanium	20	10				
Vanadium	100	50	anr			
Zinc	40	20	anr			

(*) Outside of QC limits
(anr) Analyte not requested
(a) Low recovery due to instrument drift.

INTERFERING ELEMENT CHECK STANDARDS SUMMARY
Part 1 - ICSA and ICSAB Standards

Login Number: F77897
Account: TETTNOAK - Tetra Tech, Inc
Project: Holloman AFB; Alamogordo, NM

File ID: SA111610M1.ICP Date Analyzed: 11/16/10 Methods: SW846 6010C
QC Limits: 80 to 120 % Recovery Run ID: MA8512 Units: ug/l

Time:			09:51		09:58		23:41		23:45	
Sample ID:	ICSA	ICSAB	ICSA1		ICSAB1		ICSA2		ICSAB2	
Metal	True	True	Results	% Rec	Results	% Rec	Results	% Rec	Results	% Rec
Aluminum	500000	500000	504000	100.8	506000	101.2	507000	101.4	507000	101.4
Antimony		1000	0.0		989	98.9	-1.2		1130	113.0
Arsenic		1000	-0.60		1010	101.0	-2.4		1110	111.0
Barium		500	2.7		524	104.8	-6.2		555	111.0
Beryllium		500	-0.10		502	100.4	0.0		466	93.2
Cadmium		1000	0.0		922	92.2	3.3		905	90.5
Calcium	500000	500000	460000	92.0	464000	92.8	372000	74.4*(a)	366000	73.2*(a)
Chromium		500	-0.50		419	83.8	0.10		430	86.0
Cobalt		500	0.10		488	97.6	0.30		450	90.0
Copper		500	0.0		509	101.8	1.7		573	114.6
Iron	200000	200000	185000	92.5	187000	93.5	159000	79.5*(a)	159000	79.5*(a)
Lead		1000	0.0		969	96.9	0.20		885	88.5
Magnesium	500000	500000	509000	101.8	525000	105.0	435000	87.0	448000	89.6
Manganese		500	0.20		427	85.4	0.70		449	89.8
Molybdenum		1000	0.30		953	95.3	-0.50		1000	100.0
Nickel		1000	0.0		968	96.8	1.2		897	89.7
Potassium			10.4		-6.4		-14		-28	
Selenium		1000	-1.0		987	98.7	-16		1100	110.0
Silver		1000	0.50		1100	110.0	0.10		1100	110.0
Sodium			-240		-1100		-280		-820	
Strontium		1000	-5.7		-5.8	0.0*	-3.3		-3.1	0.0*
Thallium		1000	0.10		930	93.0	0.40		876	87.6
Tin		1000	3.8		916	91.6	4.3		829	82.9
Titanium		1000	3.4		3.9	0.4*	3.9		3.6	0.4*
Vanadium		500	0.90		431	86.2	1.7		477	95.4
Zinc		1000	-4.6		881	88.1	-4.9		766	76.6*(a)

(*) Outside of QC limits
(anr) Analyte not requested
(a) Low recovery due to instrument drift.

Accutest Laboratories Instrument Runlog
Inorganics Analyses

Login Number: F77897
Account: TETTNOAK - Tetra Tech, Inc
Project: Holloman AFB; Alamogordo, NM

File ID: SA111710M1.ICP Date Analyzed: 11/17/10 Methods: SW846 6010C
Analyst: RS Run ID: MA8516
Parameters: As,Ba,Cd,Cr,Pb,Se,Ag

Time	Sample Description	Dilution Factor	PS Recov	Comments
09:07	MA8516-STD1	1		STDA
09:10	MA8516-STD2	1		STDB
09:13	MA8516-STD3	1		STDC
09:17	MA8516-HSTD1	1		
09:21	MA8516-ICV1	1		
09:27	MA8516-ICB1	1		
09:31	MA8516-ICB2	1		
09:35	MA8516-CRIA1	1		
09:42	MA8516-ICSA1	1		
09:49	MA8516-ICSAB1	1		
09:58	MA8516-CCV1	1		
10:04	MA8516-CCB1	1		
10:12	ZZZZZZ	10		
10:16	ZZZZZZ	10		
10:20	ZZZZZZ	10		
10:24	ZZZZZZ	10		
10:28	ZZZZZZ	5		
10:32	ZZZZZZ	5		
10:36	F77897-10	20		
10:40	F77897-13	20		
10:45	F77897-16	20		
10:49	MA8516-CCV2	1		
10:53	MA8516-CCB2	1		
10:59	F77897-9	4		
11:03	F77897-10	4		
11:07	F77897-11	4		
11:12	F77897-12	4		
11:16	F77897-13	4		
11:20	F77897-14	4		
11:25	F77897-15	4		
11:29	F77897-16	4		
11:33	F77897-17	4		
11:38	F77897-18	4		

Accutest Laboratories Instrument Runlog
Inorganics Analyses

Login Number: F77897
Account: TETTNOAK - Tetra Tech, Inc
Project: Holloman AFB; Alamogordo, NM

File ID: SA111710M1.ICP Date Analyzed: 11/17/10 Methods: SW846 6010C
Analyst: RS Run ID: MA8516
Parameters: As,Ba,Cd,Cr,Pb,Se,Ag

Time	Sample Description	Dilution Factor	PS Recov	Comments
11:42	MA8516-CCV3	1		
11:46	MA8516-CCB3	1		
11:50	F77897-19	4		
11:54	MA8516-CCV4	1		
11:58	MA8516-CCB4	1		
12:40	MA8516-CCV5	1		
12:46	MA8516-CCB5	1		
12:50	MP19487-MB1	1		
12:54	MP19487-B1	1		
12:58	F78081-3	1		(sample used for QC only; not part of login F77897)
13:02	MP19487-D1	1		
13:06	MP19487-SD1	5		
13:10	MP19487-PS1	1		
13:14	MP19487-S1	1		
13:18	MP19487-S2	1		
13:22	ZZZZZZ	1		
13:26	ZZZZZZ	1		
13:30	MA8516-CCV6	1		
13:34	MA8516-CCB6	1		
13:39	ZZZZZZ	1		
13:43	MP19491-MB1	1		
13:47	MP19491-B1	1		
14:19	MA8516-CCV7	1		
14:23	MA8516-CCB7	1		
14:31	ZZZZZZ	1		
14:35	ZZZZZZ	1		
14:39	ZZZZZZ	1		
14:43	ZZZZZZ	1		
14:48	ZZZZZZ	1		
14:52	ZZZZZZ	1		
14:56	ZZZZZZ	1		
15:00	ZZZZZZ	1		
15:04	ZZZZZZ	1		

Accutest Laboratories Instrument Runlog
Inorganics Analyses

Login Number: F77897
Account: TETTNOAK - Tetra Tech, Inc
Project: Holloman AFB; Alamogordo, NM

File ID: SA111710M1.ICP Date Analyzed: 11/17/10 Methods: SW846 6010C
Analyst: RS Run ID: MA8516
Parameters: As,Ba,Cd,Cr,Pb,Se,Ag

Time	Sample Description	Dilution Factor	PS Recov	Comments
15:08	MA8516-CCV8	1		
15:12	MA8516-CCB8	1		
15:16	ZZZZZZ	1		
15:20	ZZZZZZ	1		
15:24	ZZZZZZ	1		
15:28	ZZZZZZ	1		
15:32	ZZZZZZ	1		
15:37	ZZZZZZ	1		
15:41	ZZZZZZ	1		
15:45	ZZZZZZ	1		
15:49	MP19493-MB1	1		
15:53	MP19493-B1	1		
15:57	MA8516-CCV9	1		
16:01	MA8516-CCB9	1		
16:05	F78086-5	1		(sample used for QC only; not part of login F77897)
16:09	MP19493-D1	1		
16:13	MP19493-SD1	5		
16:17	MP19493-PS1	1		
16:21	MP19493-S1	1		
16:25	MP19493-S2	1		
16:29	ZZZZZZ	1		
16:33	ZZZZZZ	1		
16:37	ZZZZZZ	1		
16:41	ZZZZZZ	1		
16:45	MA8516-CCV10	1		
16:49	MA8516-CCB10	1		
16:53	ZZZZZZ	1		
16:57	ZZZZZZ	1		
17:02	MP19494-MB1	1		
17:06	MP19494-B1	1		
17:10	F77924-1	1		(sample used for QC only; not part of login F77897)
17:14	MP19494-D1	1		
17:18	MP19494-SD1	5		

Accutest Laboratories Instrument Runlog
Inorganics Analyses

Login Number: F77897
Account: TETTNOAK - Tetra Tech, Inc
Project: Holloman AFB; Alamogordo, NM

File ID: SA111710M1.ICP Date Analyzed: 11/17/10 Methods: SW846 6010C
Analyst: RS Run ID: MA8516
Parameters: As,Ba,Cd,Cr,Pb,Se,Ag

Time	Sample Description	Dilution Factor	PS Recov	Comments
17:22	MP19494-PS1	1		
17:26	MP19494-S1	1		
17:30	MP19494-S2	1		
17:34	MA8516-CCV11	1		
17:38	MA8516-CCB11	1		
17:42	ZZZZZZ	1		
17:46	ZZZZZZ	1		
17:51	ZZZZZZ	1		
17:55	ZZZZZZ	1		
17:59	ZZZZZZ	1		
18:03	ZZZZZZ	1		
18:07	ZZZZZZ	1		
18:12	ZZZZZZ	1		
18:16	ZZZZZZ	1		
18:20	MP19494-MB2A	1		
18:24	MA8516-CCV12	1		
18:28	MA8516-CCB12	1		
18:32	MP19495-MB1	1		
18:36	MP19495-B1	1		
18:40	F77998-1	1		(sample used for QC only; not part of login F77897)
18:44	MP19495-D1	1		
18:48	MP19495-SD1	5		
18:52	MP19495-PS1	1		
18:56	MP19495-S1	1		
19:00	MP19495-S2	1		
19:04	ZZZZZZ	1		
19:08	ZZZZZZ	1		
19:12	MA8516-CCV13	1		
19:16	MA8516-CCB13	1		
19:20	ZZZZZZ	1		
19:24	ZZZZZZ	1		
19:28	ZZZZZZ	1		
19:32	ZZZZZZ	1		

Accutest Laboratories Instrument Runlog
Inorganics Analyses

Login Number: F77897
Account: TETTNOAK - Tetra Tech, Inc
Project: Holloman AFB; Alamogordo, NM

File ID: SA111710M1.ICP Date Analyzed: 11/17/10 Methods: SW846 6010C
Analyst: RS Run ID: MA8516
Parameters: As,Ba,Cd,Cr,Pb,Se,Ag

Time	Sample Description	Dilution Factor	PS Recov	Comments
19:37	ZZZZZZ	1		
19:41	ZZZZZZ	1		
19:45	ZZZZZZ	1		
19:49	ZZZZZZ	1		
19:53	ZZZZZZ	1		
19:57	ZZZZZZ	1		
20:01	MA8516-CCV14	1		
20:05	MA8516-CCB14	1		
20:09	ZZZZZZ	1		
20:13	ZZZZZZ	1		
20:17	ZZZZZZ	1		
20:21	ZZZZZZ	1		
20:26	ZZZZZZ	1		
20:30	ZZZZZZ	1		
20:35	MP19495-MB2A	1		
20:39	MP19492-MB1	1		
20:43	MP19492-B1	1		
20:51	MA8516-CCV15	1		
20:55	MA8516-CCB15	1		
20:59	MP19492-D1	1		
21:03	MP19492-SD1	5		
21:07	MP19492-PS1	1		
21:11	MP19492-S1	1		
21:15	MP19492-S2	1		
21:19	ZZZZZZ	1		
21:24	ZZZZZZ	1		
21:32	ZZZZZZ	1		
21:40	MA8516-CCV16	1		
21:44	MA8516-CCB16	1		
22:01	ZZZZZZ	1		
22:14	ZZZZZZ	1		
22:18	ZZZZZZ	1		
22:22	ZZZZZZ	1		

Accutest Laboratories Instrument Runlog
Inorganics Analyses

Login Number: F77897
Account: TETTNOAK - Tetra Tech, Inc
Project: Holloman AFB; Alamogordo, NM

File ID: SA111710M1.ICP Date Analyzed: 11/17/10 Methods: SW846 6010C
Analyst: RS Run ID: MA8516
Parameters: As,Ba,Cd,Cr,Pb,Se,Ag

Time	Sample Description	Dilution Factor	PS Recov	Comments
22:30	MA8516-CCV17	1		
22:34	MA8516-CCB17	1		
22:38	ZZZZZZ	1		
22:42	ZZZZZZ	1		
22:46	ZZZZZZ	1		
22:50	ZZZZZZ	1		
22:54	ZZZZZZ	1		
22:58	ZZZZZZ	1		
23:03	ZZZZZZ	1		
23:07	ZZZZZZ	1		
23:11	MP19486-MB1	1		
23:15	MP19486-B1	1		
23:19	MA8516-CCV18	1		
23:23	MA8516-CCB18	1		
23:27	F77897-24	1		
23:32	MP19486-D1	1		
23:36	MP19486-SD1	5		
23:40	MP19486-PS1	1		
23:44	MP19486-S1	1		
23:48	MP19486-S2	1		
23:53	F77897-20	1		
23:57	F77897-21	1		
00:01	F77897-22	1		
00:05	F77897-23	1		
00:10	MA8516-CCV19	1		
00:13	MA8516-CCB19	1		
00:18	F77897-25	1		
00:22	F77897-26	1		
00:26	F77897-27	1		
00:30	F77897-28	1		
00:34	F77897-29	1		
00:39	F77897-30	1		
00:43	F77897-31	1		

Accutest Laboratories Instrument Runlog
Inorganics Analyses

Login Number: F77897
Account: TETTNOAK - Tetra Tech, Inc
Project: Holloman AFB; Alamogordo, NM

File ID: SA111710M1.ICP Date Analyzed: 11/17/10 Methods: SW846 6010C
Analyst: RS Run ID: MA8516
Parameters: As,Ba,Cd,Cr,Pb,Se,Ag

	Time	Sample Description	Dilution Factor	PS Recov	Comments
	00:47	F77897-32	1		
	00:51	F77897-33	1		
	00:55	F77897-36	1		
	01:00	MA8516-CCV20	1		
	01:03	MA8516-CCB20	1		
	01:08	F77897-37	1		
	01:12	F77897-38	1		
---------->	Last reportable sample/prep for job F77897				
	01:16	MA8516-CRIA2	1		
	01:20	MA8516-ICSA2	1		
	01:25	MA8516-ICSAB2	1		
	01:29	MA8516-CCV21	1		
	01:33	MA8516-CCB21	1		
---------->	Last reportable CCB for job F77897				

Refer to raw data for calibration curve and standards.

INTERNAL STANDARD SUMMARY

Login Number: F77897
Account: TETTNOAK - Tetra Tech, Inc
Project: Holloman AFB; Alamogordo, NM

File ID: SA111710M1.ICP Date Analyzed: 11/17/10 Methods: SW846 6010C
Analyst: RS Run ID: MA8516
Parameters: As,Ba,Cd,Cr,Pb,Se,Ag

Time	Sample Description	Istd#1	Istd#2	Istd#3	Istd#4	Istd#5
09:07	MA8516-STD1	2153	1702	31841	9951	1428
09:10	MA8516-STD2	2025	1699	30383	9835	1186
09:13	MA8516-STD3	1956	1718	29462	9760	1112
09:17	MA8516-HSTD1	1948	1721	29619	9735	1106
09:21	MA8516-ICV1	2017	1694	30582	9977	1188
09:27	MA8516-ICB1	2127 R	1706 R	31762 R	10064 R	1428 R
09:31	MA8516-ICB2	2116	1726	999999 !	10003	1429
09:35	MA8516-CRIA1	2103	1701	30996	9935	1355
09:42	MA8516-ICSA1	1844	1745	27584	9528	990
09:49	MA8516-ICSAB1	1832	1739	27187	9391	981
09:58	MA8516-CCV1	2025	1694	30135	9826	1187
10:04	MA8516-CCB1	2117	1700	31282	9933	1416
10:12	ZZZZZZ	2336	1952	34570	11353	1225
10:16	ZZZZZZ	2220	1891	33390	10748	1251
10:20	ZZZZZZ	2227	1885	33488	11063	1262
10:24	ZZZZZZ	2234	1910	33483	11048	1268
10:28	ZZZZZZ	2213	1900	33642	11250	1176
10:32	ZZZZZZ	2118	1827	32400	11015	1107
10:36	F77897-10	1800	1505	28611	10202	1146
10:40	F77897-13	1739	1410	27619	10145	1120
10:45	F77897-16	1699	1395	27475	10236	1098
10:49	MA8516-CCV2	1812	1533	28770	10428	1129
10:53	MA8516-CCB2	1950	1591	30498	10846	1384
10:59	F77897-9	1650	1306	26250	10100	972
11:03	F77897-10	1474	1163	24060	9689	890
11:07	F77897-11	1515	1258	25226	9815	921
11:12	F77897-12	1659	1386	27073	10214	956
11:16	F77897-13	1488	1175	24583	9516	910
11:20	F77897-14	1478	1169	24299	9443	904
11:25	F77897-15	1633	1246	25124	9667	1001
11:29	F77897-16	1488	1232	24535	9442	894
11:33	F77897-17	1729	1437	27201	10027	973
11:38	F77897-18	1736	1418	26742	9954	1010

INTERNAL STANDARD SUMMARY

Login Number: F77897
Account: TETTNOAK - Tetra Tech, Inc
Project: Holloman AFB; Alamogordo, NM

File ID: SA111710M1.ICP Date Analyzed: 11/17/10 Methods: SW846 6010C
Analyst: RS Run ID: MA8516
Parameters: As,Ba,Cd,Cr,Pb,Se,Ag

Time	Sample Description	Istd#1	Istd#2	Istd#3	Istd#4	Istd#5
11:42	MA8516-CCV3	1870	1590	29348	10194	1151
11:46	MA8516-CCB3	1961	1586	30534	10310	1371
11:50	F77897-19	1756	1453	27805	9987	1013
11:54	MA8516-CCV4	1787	1516	28312	9911	1120
11:58	MA8516-CCB4	1906	1546	29925	10160	1367
12:40	MA8516-CCV5	2157	1812	30904	9228	1232
12:46	MA8516-CCB5	2294	1826	31998	9183	1486
12:50	MP19487-MB1	2243	1744	31464	9107	1452
12:54	MP19487-B1	2148	1730	30427	9014	1270
12:58	F78081-3	2818 !	2589 !	40375 !	12119	1194
13:02	MP19487-D1	2914 !	2754 !	41688 !	12588 !	1165
13:06	MP19487-SD1	2465	2100	34775	10090	1388
13:10	MP19487-PS1	2811 !	2569 !	39971 !	11994	1183
13:14	MP19487-S1	2788 !	2586 !	39747 !	12042	1154
13:18	MP19487-S2	2906 !	2738 !	41522 !	12595 !	1133
13:22	ZZZZZZ	2707 !	2604 !	38766	11692	1144
13:26	ZZZZZZ	2605	2446 !	37455	11396	1165
13:30	MA8516-CCV6	2209	1884	31391	9205	1265
13:34	MA8516-CCB6	2350	1886	32520	9193	1519
13:39	ZZZZZZ	2874 !	2724 !	41279 !	12523	1131
13:43	MP19491-MB1	2251	1778	31648	9115	1465
13:47	MP19491-B1	2161	1779	30155	8895	1286
14:19	MA8516-CCV7	2250	1887	31797	9192	1281
14:23	MA8516-CCB7	2348	1868	33036	9276	1520
14:31	ZZZZZZ	2365	1952	33149	9584	1342
14:35	ZZZZZZ	2811 !	2317 !	39472	11463	1265
14:39	ZZZZZZ	2798 !	2268 !	39595	11525	1271
14:43	ZZZZZZ	2778 !	2314 !	39429	11760	1218
14:48	ZZZZZZ	2773 !	2287 !	38790	11351	1275
14:52	ZZZZZZ	2728 !	2228 !	38027	11016	1301
14:56	ZZZZZZ	2665 !	2158 !	37411	10782	1309
15:00	ZZZZZZ	2795 !	2297 !	39221	11441	1285
15:04	ZZZZZZ	2632	2160 !	36820	10787	1296

INTERNAL STANDARD SUMMARY

Login Number: F77897
Account: TETTNOAK - Tetra Tech, Inc
Project: Holloman AFB; Alamogordo, NM

File ID: SA111710M1.ICP Date Analyzed: 11/17/10 Methods: SW846 6010C
Analyst: RS Run ID: MA8516
Parameters: As,Ba,Cd,Cr,Pb,Se,Ag

Time	Sample Description	Istd#1	Istd#2	Istd#3	Istd#4	Istd#5
15:08	MA8516-CCV8	2250	1904	31630	9086	1281
15:12	MA8516-CCB8	2378	1896	33044	9222	1529
15:16	ZZZZZZ	2629	2135 !	36872	10803	1287
15:20	ZZZZZZ	2779 !	2294 !	38780	11351	1284
15:24	ZZZZZZ	2784 !	2299 !	39053	11350	1278
15:28	ZZZZZZ	2837 !	2302 !	39908 !	11600	1258
15:32	ZZZZZZ	2829 !	2309 !	39626	11543	1285
15:37	ZZZZZZ	2752 !	2264 !	38117	11006	1313
15:41	ZZZZZZ	2618	2091	36307	10359	1358
15:45	ZZZZZZ	2404	1959	33760	9753	1347
15:49	MP19493-MB1	2356	1921	32895	9307	1548
15:53	MP19493-B1	2262	1875	31239	9056	1326
15:57	MA8516-CCV9	2227	1834	31341	9108	1258
16:01	MA8516-CCB9	2346	1877	32872	9361	1514
16:05	F78086-5	2303	1862	32244	9265	1501
16:09	MP19493-D1	2308	1852	32038	9189	1503
16:13	MP19493-SD1	2342	1870	32688	9245	1505
16:17	MP19493-PS1	2274	1826	31831	9258	1405
16:21	MP19493-S1	2189	1818	30773	9137	1288
16:25	MP19493-S2	2214	1842	31002	9157	1303
16:29	ZZZZZZ	2303	1843	32263	9261	1486
16:33	ZZZZZZ	2277	1842	31969	9264	1470
16:37	ZZZZZZ	2291	1835	31886	9203	1484
16:41	ZZZZZZ	2292	1837	31891	9139	1473
16:45	MA8516-CCV10	2181	1837	30906	9102	1244
16:49	MA8516-CCB10	2291	1845	32046	9167	1493
16:53	ZZZZZZ	2258	1812	31446	9116	1397
16:57	ZZZZZZ	2301	1832	32107	9319	1467
17:02	MP19494-MB1	2335	1862	32628	9369	1516
17:06	MP19494-B1	2214	1842	30995	9158	1304
17:10	F77924-1	2090	1687	29456	8982	1195
17:14	MP19494-D1	2093	1685	29674	9118	1194
17:18	MP19494-SD1	2220	1777	31068	9135	1346

INTERNAL STANDARD SUMMARY

Login Number: F77897
Account: TETTNOAK - Tetra Tech, Inc
Project: Holloman AFB; Alamogordo, NM

File ID: SA111710M1.ICP Date Analyzed: 11/17/10 Methods: SW846 6010C
Analyst: RS Run ID: MA8516
Parameters: As,Ba,Cd,Cr,Pb,Se,Ag

Time	Sample Description	Istd#1	Istd#2	Istd#3	Istd#4	Istd#5
17:22	MP19494-PS1	2101	1682	29563	8917	1188
17:26	MP19494-S1	2097	1724	29794	9024	1146
17:30	MP19494-S2	2101	1736	29694	8990	1149
17:34	MA8516-CCV11	2184	1849	30860	9046	1248
17:38	MA8516-CCB11	2314	1861	32234	9195	1496
17:42	ZZZZZZ	2126	1730	29831	8986	1247
17:46	ZZZZZZ	2139	1724	29750	9047	1231
17:51	ZZZZZZ	2083	1669	29154	8935	1178
17:55	ZZZZZZ	2319	1860	32304	9331	1495
17:59	ZZZZZZ	2112	1702	29623	9041	1229
18:03	ZZZZZZ	2141	1715	29927	9051	1251
18:07	ZZZZZZ	2110	1719	29620	9101	1212
18:12	ZZZZZZ	2315	1833	32191	9352	1490
18:16	ZZZZZZ	2168	1730	30090	9182	1271
18:20	MP19494-MB2A	2345	1867	32456	9451	1496
18:24	MA8516-CCV12	2207	1846	30694	9113	1237
18:28	MA8516-CCB12	2342	1862	32153	9355	1487
18:32	MP19495-MB1	2346	1848	32461	9447	1488
18:36	MP19495-B1	2255	1827	31185	9363	1299
18:40	F77998-1	2340	1861	32329	9456	1460
18:44	MP19495-D1	2346	1864	32296	9453	1465
18:48	MP19495-SD1	2359	1873	32285	9295	1482
18:52	MP19495-PS1	2300	1823	31526	9354	1376
18:56	MP19495-S1	2272	1830	30913	9165	1286
19:00	MP19495-S2	2290	1824	31274	9212	1300
19:04	ZZZZZZ	2194	1739	30759	9294	1312
19:08	ZZZZZZ	2329	1847	32380	9519	1426
19:12	MA8516-CCV13	2249	1876	30852	9129	1251
19:16	MA8516-CCB13	2392	1878	32852	9413	1508
19:20	ZZZZZZ	2326	1829	32102	9424	1432
19:24	ZZZZZZ	2283	1826	31558	9358	1389
19:28	ZZZZZZ	2296	1836	31826	9427	1395
19:32	ZZZZZZ	2227	1750	30535	9166	1315

INTERNAL STANDARD SUMMARY

Login Number: F77897
Account: TETTNOAK - Tetra Tech, Inc
Project: Holloman AFB; Alamogordo, NM

File ID: SA111710M1.ICP Date Analyzed: 11/17/10 Methods: SW846 6010C
Analyst: RS Run ID: MA8516
Parameters: As,Ba,Cd,Cr,Pb,Se,Ag

Time	Sample Description	Istd#1	Istd#2	Istd#3	Istd#4	Istd#5
19:37	ZZZZZZ	2304	1794	31748	9478	1393
19:41	ZZZZZZ	3227 !	2885 !	44998 !	14105 !	997
19:45	ZZZZZZ	1726	1481	25597	8627	957
19:49	ZZZZZZ	1832	1489	24985	8502	962
19:53	ZZZZZZ	2152	1783	30009	9615	1069
19:57	ZZZZZZ	2342	1862	32851	9631	1520
20:01	MA8516-CCV14	2228	1873	31072	9295	1262
20:05	MA8516-CCB14	2391	1896	32682	9352	1529
20:09	ZZZZZZ	2343	1848	32663	9442	1469
20:13	ZZZZZZ	2271	1805	31503	9261	1390
20:17	ZZZZZZ	1473	1175	20334	7473	720 !
20:21	ZZZZZZ	1487	1173	20437	7594	730 !
20:26	ZZZZZZ	1636	1301	22541	7949	826 !
20:30	ZZZZZZ	1616	1277	22705	8119	824 !
20:35	MP19495-MB2A	2317	1866	32560	9523	1515
20:39	MP19492-MB1	2258	1759	31063	9084	1459
20:43	MP19492-B1	2190	1738	30501	9117	1278
20:51	MA8516-CCV15	2255	1910	31588	9284	1282
20:55	MA8516-CCB15	2371	1901	32863	9426	1531
20:59	MP19492-D1	4203 !	3467 !	57787 !	17065 !	1216
21:03	MP19492-SD1	2912 !	2359 !	40440 !	11688	1386
21:07	MP19492-PS1	4530 !	3794 !	63201 !	18880 !	1197
21:11	MP19492-S1	4131 !	3514 !	57563 !	17233 !	1177
21:15	MP19492-S2	4298 !	3667 !	59701 !	17922 !	1172
21:19	ZZZZZZ	2318	1917	33119	11218	703 !
21:24	ZZZZZZ	3117 !	2660 !	42944 !	12522	1300
21:32	ZZZZZZ	1863	1493	26621	9235	711 !
21:40	MA8516-CCV16	2292	1919	32144	9267	1289
21:44	MA8516-CCB16	2363	1904	32962	9379	1529
22:01	ZZZZZZ	2875 !	2375 !	40063 !	11643	1381
22:14	ZZZZZZ	2305	1847	31920	9211	1448
22:18	ZZZZZZ	2269	2593 !	31902	9521	1244
22:22	ZZZZZZ	2617	2656 !	35957	10506	1223

INTERNAL STANDARD SUMMARY

Login Number: F77897
Account: TETTNOAK - Tetra Tech, Inc
Project: Holloman AFB; Alamogordo, NM

File ID: SA111710M1.ICP Date Analyzed: 11/17/10 Methods: SW846 6010C
Analyst: RS Run ID: MA8516
Parameters: As,Ba,Cd,Cr,Pb,Se,Ag

Time	Sample Description	Istd#1	Istd#2	Istd#3	Istd#4	Istd#5
22:30	MA8516-CCV17	2276	1934	32107	9296	1300
22:34	MA8516-CCB17	2382	1917	33061	9304	1550
22:38	ZZZZZZ	2622	2595 !	37381	11377	1074
22:42	ZZZZZZ	2711 !	2709 !	38444	11496	1124
22:46	ZZZZZZ	2581	2563 !	37083	11217	1072
22:50	ZZZZZZ	2548	2549 !	36562	10953	1146
22:54	ZZZZZZ	2528	2518 !	36105	10913	1109
22:58	ZZZZZZ	2679 !	2696 !	38087	11425	1112
23:03	ZZZZZZ	2512	2562 !	36178	10965	1082
23:07	ZZZZZZ	1420	1130	19531	7284	676 !
23:11	MP19486-MB1	2239	1785	31825	9410	1483
23:15	MP19486-B1	2176	1769	30668	9245	1305
23:19	MA8516-CCV18	2231	1879	31610	9368	1274
23:23	MA8516-CCB18	2324	1853	32961	9530	1521
23:27	F77897-24	1884	1680	27377	9178	887
23:32	MP19486-D1	1791	1602	26997	9243	840 !
23:36	MP19486-SD1	2043	1695	29738	9487	1147
23:40	MP19486-PS1	1843	1645	27606	9349	871
23:44	MP19486-S1	1753	1593	26342	9110	808 !
23:48	MP19486-S2	1800	1655	27147	9280	831 !
23:53	F77897-20	1805	1498	26292	8867	889
23:57	F77897-21	2094	1988	30746	10140	818 !
00:01	F77897-22	1813	1465	25795	8512	867
00:05	F77897-23	1817	1503	26663	8972	904
00:10	MA8516-CCV19	2169	1863	31352	9367	1266
00:13	MA8516-CCB19	2252	1839	32273	9451	1491
00:18	F77897-25	1784	1500	26325	8393	873
00:22	F77897-26	1812	1422	25314	8543	898
00:26	F77897-27	1780	1516	26483	8889	850 !
00:30	F77897-28	1679	1393	25182	8547	833 !
00:34	F77897-29	1726	1418	25653	8540	855 !
00:39	F77897-30	1671	1341	24417	8495	839 !
00:43	F77897-31	1904	1549	27150	9112	937

INTERNAL STANDARD SUMMARY

Login Number: F77897
Account: TETTNOAK - Tetra Tech, Inc
Project: Holloman AFB; Alamogordo, NM

File ID: SA111710M1.ICP Date Analyzed: 11/17/10 Methods: SW846 6010C
Analyst: RS Run ID: MA8516
Parameters: As,Ba,Cd,Cr,Pb,Se,Ag

Time	Sample Description	Istd#1	Istd#2	Istd#3	Istd#4	Istd#5
00:47	F77897-32	1963	1685	29143	9679	912
00:51	F77897-33	1816	1431	25843	8822	881
00:55	F77897-36	1909	1564	26469	8689	912
01:00	MA8516-CCV20	2123	1805	30131	8777	1221
01:03	MA8516-CCB20	2214	1781	31702	9000	1435
01:08	F77897-37	1846	1518	26646	8851	891
01:12	F77897-38	1709	1389	26376	9698	858
01:16	MA8516-CRIA2	1869	1492	28892	10072	1302
01:20	MA8516-ICSA2	1655	1508	25631	8716	930
01:25	MA8516-ICSAB2	1659	1504	25842	8778	925
01:29	MA8516-CCV21	1758	1436	27672	9192	1094
01:33	MA8516-CCB21	1836	1475	28944	9479	1331

R = Reference for ISTD limits. ! = Outside limits.

LEGEND:

Istd#	Parameter	Limits
Istd#1	Yttrium (2243)	60-125 %
Istd#2	Yttrium (2422)	60-125 %
Istd#3	Yttrium (3242)	60-125 %
Istd#4	Yttrium (3710)	60-125 %
Istd#5	Indium	60-125 %

BLANK RESULTS SUMMARY
Part 1 - Initial and Continuing Calibration Blanks

Login Number: F77897
Account: TETTNOAK - Tetra Tech, Inc
Project: Holloman AFB; Alamogordo, NM

File ID: SA111710M1.ICP Date Analyzed: 11/17/10 Methods: SW846 6010C
QC Limits: result < RL Run ID: MA8516 Units: ug/l

Time:			09:27		09:31		10:04		10:53	
Sample ID:			ICB1		ICB2		CCB1		CCB2	
Metal	RL	IDL	raw	final	raw	final	raw	final	raw	final
Aluminum	200	20	anr							
Antimony	6.0	1								
Arsenic	10	1	-1.0	<10			-1.6	<10	-1.8	<10
Barium	200	1	1.0	<200			2.0	<200	-1.3	<200
Beryllium	4.0	.1	anr							
Cadmium	5.0	.1	0.0	<5.0			0.10	<5.0	0.10	<5.0
Calcium	1000	50	anr							
Chromium	10	1	-0.10	<10			-0.10	<10	0.30	<10
Cobalt	50	1	anr							
Copper	25	1	anr							
Iron	300	34	anr							
Lead	5.0	1	0.40	<5.0			0.50	<5.0	0.0	<5.0
Magnesium	5000	50	anr							
Manganese	15	1	anr							
Molybdenum	50	1	anr							
Nickel	40	1	anr							
Potassium	10000	50	anr							
Selenium	10	2	0.20	<10			0.20	<10	2.2	<10
Silver	10	1	0.10	<10			0.0	<10	-0.50	<10
Sodium	10000	750	anr							
Strontium	10	1								
Thallium	10	1	anr							
Tin	50	1	anr							
Titanium	10	1.1								
Vanadium	50	1	anr							
Zinc	20	1	anr							

(*) Outside of QC limits
(anr) Analyte not requested

BLANK RESULTS SUMMARY
Part 1 - Initial and Continuing Calibration Blanks

Login Number: F77897
Account: TETTNOAK - Tetra Tech, Inc
Project: Holloman AFB; Alamogordo, NM

File ID: SA111710M1.ICP Date Analyzed: 11/17/10 Methods: SW846 6010C
QC Limits: result < RL Run ID: MA8516 Units: ug/l

Time:			11:46		11:58		12:46		13:34	
Sample ID:			CCB3		CCB4		CCB5		CCB6	
Metal	RL	IDL	raw	final	raw	final	raw	final	raw	final
Aluminum	200	20	anr							
Antimony	6.0	1	anr							
Arsenic	10	1	-0.90	<10	0.60	<10	0.60	<10	1.8	<10
Barium	200	1	-0.20	<200	0.0	<200	0.40	<200	0.10	<200
Beryllium	4.0	.1	anr							
Cadmium	5.0	.1	0.30	<5.0	0.30	<5.0	0.30	<5.0	0.40	<5.0
Calcium	1000	50	anr							
Chromium	10	1	0.40	<10	0.30	<10	0.50	<10	0.50	<10
Cobalt	50	1	anr							
Copper	25	1	anr							
Iron	300	34	anr							
Lead	5.0	1	-0.20	<5.0	0.50	<5.0	0.40	<5.0	1.2	<5.0
Magnesium	5000	50	anr							
Manganese	15	1	anr							
Molybdenum	50	1	anr							
Nickel	40	1	anr							
Potassium	10000	50	anr							
Selenium	10	2	0.30	<10	2.0	<10	1.2	<10	1.7	<10
Silver	10	1	-0.70	<10	-0.40	<10	-0.30	<10	0.0	<10
Sodium	10000	750	anr							
Strontium	10	1								
Thallium	10	1	anr							
Tin	50	1	anr							
Titanium	10	1.1								
Vanadium	50	1	anr							
Zinc	20	1	anr							

(*) Outside of QC limits
(anr) Analyte not requested

BLANK RESULTS SUMMARY
Part 1 - Initial and Continuing Calibration Blanks

Login Number: F77897
Account: TETTNOAK - Tetra Tech, Inc
Project: Holloman AFB; Alamogordo, NM

File ID: SA111710M1.ICP Date Analyzed: 11/17/10 Methods: SW846 6010C
QC Limits: result < RL Run ID: MA8516 Units: ug/l

Time:			14:23		15:12		16:01		16:49	
Sample ID:			CCB7		CCB8		CCB9		CCB10	
Metal	RL	IDL	raw	final	raw	final	raw	final	raw	final
Aluminum	200	20	anr							
Antimony	6.0	1	anr							
Arsenic	10	1	0.40	<10	0.40	<10	0.70	<10	1.4	<10
Barium	200	1	-1.8	<200	-1.2	<200	-1.6	<200	0.0	<200
Beryllium	4.0	.1	anr							
Cadmium	5.0	.1	0.10	<5.0	0.20	<5.0	0.20	<5.0	0.30	<5.0
Calcium	1000	50	anr							
Chromium	10	1	0.10	<10	0.0	<10	0.30	<10	0.10	<10
Cobalt	50	1	anr							
Copper	25	1	anr							
Iron	300	34	anr							
Lead	5.0	1	0.60	<5.0	1.0	<5.0	0.40	<5.0	1.0	<5.0
Magnesium	5000	50	anr							
Manganese	15	1	anr							
Molybdenum	50	1	anr							
Nickel	40	1	anr							
Potassium	10000	50	anr							
Selenium	10	2	0.0	<10	0.40	<10	2.2	<10	1.6	<10
Silver	10	1	-0.10	<10	-0.60	<10	-0.10	<10	0.30	<10
Sodium	10000	750	anr							
Strontium	10	1								
Thallium	10	1	anr							
Tin	50	1	anr							
Titanium	10	1.1								
Vanadium	50	1	anr							
Zinc	20	1	anr							

(*) Outside of QC limits
(anr) Analyte not requested

BLANK RESULTS SUMMARY
Part 1 - Initial and Continuing Calibration Blanks

Login Number: F77897
Account: TETTNOAK - Tetra Tech, Inc
Project: Holloman AFB; Alamogordo, NM

File ID: SA111710M1.ICP Date Analyzed: 11/17/10 Methods: SW846 6010C
QC Limits: result < RL Run ID: MA8516 Units: ug/l

Time:			17:38		18:28		19:16		20:05	
Sample ID:			CCB11		CCB12		CCB13		CCB14	
Metal	RL	IDL	raw	final	raw	final	raw	final	raw	final
Aluminum	200	20	anr							
Antimony	6.0	1	anr							
Arsenic	10	1	0.80	<10	0.60	<10	0.90	<10	1.5	<10
Barium	200	1	0.20	<200	-0.50	<200	-2.9	<200	-0.50	<200
Beryllium	4.0	.1	anr							
Cadmium	5.0	.1	0.20	<5.0	0.30	<5.0	0.30	<5.0	0.40	<5.0
Calcium	1000	50	anr							
Chromium	10	1	0.20	<10	0.20	<10	0.30	<10	0.30	<10
Cobalt	50	1	anr							
Copper	25	1	anr							
Iron	300	34	anr							
Lead	5.0	1	1.0	<5.0	1.3	<5.0	0.30	<5.0	1.2	<5.0
Magnesium	5000	50	anr							
Manganese	15	1	anr							
Molybdenum	50	1	anr							
Nickel	40	1	anr							
Potassium	10000	50	anr							
Selenium	10	2	-0.60	<10	0.60	<10	0.80	<10	1.8	<10
Silver	10	1	-0.10	<10	-0.10	<10	0.0	<10	0.20	<10
Sodium	10000	750	anr							
Strontium	10	1								
Thallium	10	1	anr							
Tin	50	1	anr							
Titanium	10	1.1								
Vanadium	50	1	anr							
Zinc	20	1	anr							

(*) Outside of QC limits
(anr) Analyte not requested

BLANK RESULTS SUMMARY
Part 1 - Initial and Continuing Calibration Blanks

Login Number: F77897
Account: TETTNOAK - Tetra Tech, Inc
Project: Holloman AFB; Alamogordo, NM

File ID: SA111710M1.ICP Date Analyzed: 11/17/10 Methods: SW846 6010C
QC Limits: result < RL Run ID: MA8516 Units: ug/l

Time:			20:55		21:44		22:34		23:23	
Sample ID:			CCB15		CCB16		CCB17		CCB18	
Metal	RL	IDL	raw	final	raw	final	raw	final	raw	final
Aluminum	200	20	anr							
Antimony	6.0	1	anr							
Arsenic	10	1	1.0	<10	1.8	<10	0.70	<10	0.80	<10
Barium	200	1	-0.20	<200	-1.7	<200	-0.20	<200	-3.3	<200
Beryllium	4.0	.1	anr							
Cadmium	5.0	.1	0.40	<5.0	0.20	<5.0	0.20	<5.0	0.20	<5.0
Calcium	1000	50	anr							
Chromium	10	1	0.70	<10	0.0	<10	0.20	<10	0.30	<10
Cobalt	50	1	anr							
Copper	25	1	anr							
Iron	300	34	anr							
Lead	5.0	1	1.3	<5.0	0.0	<5.0	1.1	<5.0	1.0	<5.0
Magnesium	5000	50	anr							
Manganese	15	1	anr							
Molybdenum	50	1	anr							
Nickel	40	1	anr							
Potassium	10000	50	anr							
Selenium	10	2	0.30	<10	-0.40	<10	-0.40	<10	0.0	<10
Silver	10	1	0.0	<10	0.20	<10	-0.10	<10	0.10	<10
Sodium	10000	750	anr							
Strontium	10	1								
Thallium	10	1	anr							
Tin	50	1	anr							
Titanium	10	1.1								
Vanadium	50	1	anr							
Zinc	20	1	anr							

(*) Outside of QC limits
(anr) Analyte not requested

BLANK RESULTS SUMMARY
Part 1 - Initial and Continuing Calibration Blanks

Login Number: F77897
Account: TETTNOAK - Tetra Tech, Inc
Project: Holloman AFB; Alamogordo, NM

File ID: SA111710M1.ICP Date Analyzed: 11/17/10 Methods: SW846 6010C
QC Limits: result < RL Run ID: MA8516 Units: ug/l

Time:			00:13		01:03		01:33	
Sample ID:			CCB19		CCB20		CCB21	
Metal	RL	IDL	raw	final	raw	final	raw	final
Aluminum	200	20	anr					
Antimony	6.0	1	anr					
Arsenic	10	1	0.20	<10	1.6	<10	1.0	<10
Barium	200	1	-2.5	<200	-3.1	<200	-6.5	<200
Beryllium	4.0	.1	anr					
Cadmium	5.0	.1	0.40	<5.0	0.40	<5.0	0.20	<5.0
Calcium	1000	50	anr					
Chromium	10	1	0.0	<10	-0.20	<10	0.30	<10
Cobalt	50	1	anr					
Copper	25	1	anr					
Iron	300	34	anr					
Lead	5.0	1	-0.30	<5.0	1.2	<5.0	-1.0	<5.0
Magnesium	5000	50	anr					
Manganese	15	1	anr					
Molybdenum	50	1	anr					
Nickel	40	1	anr					
Potassium	10000	50	anr					
Selenium	10	2	-0.30	<10	-1.0	<10	1.9	<10
Silver	10	1	-0.10	<10	-0.10	<10	-0.40	<10
Sodium	10000	750	anr					
Strontium	10	1						
Thallium	10	1	anr					
Tin	50	1	anr					
Titanium	10	1.1						
Vanadium	50	1	anr					
Zinc	20	1	anr					

(*) Outside of QC limits
(anr) Analyte not requested

CALIBRATION CHECK STANDARDS SUMMARY
Initial and Continuing Calibration Checks

Login Number: F77897
Account: TETTNOAK - Tetra Tech, Inc
Project: Holloman AFB; Alamogordo, NM

File ID: SA111710M1.ICP Date Analyzed: 11/17/10 Methods: SW846 6010C
QC Limits: 90 to 110 % Recovery Run ID: MA8516 Units: ug/l

Time:		09:21			09:58			10:49	
Sample ID:	ICV	ICV1		CCV	CCV1		CCV	CCV2	
Metal	True	Results	% Rec	True	Results	% Rec	True	Results	% Rec
Aluminum	anr								
Antimony	anr								
Arsenic	2000	1990	99.5	2000	2000	100.0	2000	2090	104.5
Barium	2000	2050	102.5	2000	2070	103.5	2000	2150	107.5
Beryllium	anr								
Cadmium	2000	2060	103.0	2000	2020	101.0	2000	2010	100.5
Calcium	anr								
Chromium	2000	2070	103.5	2000	2080	104.0	2000	2080	104.0
Cobalt	anr								
Copper	anr								
Iron	anr								
Lead	2000	2030	101.5	2000	2010	100.5	2000	1890	94.5
Magnesium	anr								
Manganese	anr								
Molybdenum	anr								
Nickel	anr								
Potassium	anr								
Selenium	2000	2040	102.0	2000	1990	99.5	2000	2130	106.5
Silver	250	247	98.8	250	254	101.6	250	251	100.4
Sodium	anr								
Strontium									
Thallium	anr								
Tin	anr								
Titanium									
Vanadium	anr								
Zinc	anr								

(*) Outside of QC limits
(anr) Analyte not requested

CALIBRATION CHECK STANDARDS SUMMARY
Initial and Continuing Calibration Checks

Login Number: F77897
Account: TETTNOAK - Tetra Tech, Inc
Project: Holloman AFB; Alamogordo, NM

File ID: SA111710M1.ICP Date Analyzed: 11/17/10 Methods: SW846 6010C
QC Limits: 90 to 110 % Recovery Run ID: MA8516 Units: ug/l

Time:		11:42			11:54			12:40	
Sample ID:	CCV	CCV3		CCV	CCV4		CCV	CCV5	
Metal	True	Results	% Rec	True	Results	% Rec	True	Results	% Rec
Aluminum	anr								
Antimony	anr								
Arsenic	2000	2050	102.5	2000	2100	105.0	2000	2010	100.5
Barium	2000	2120	106.0	2000	2210	110.5*(a	2000	2030	101.5
Beryllium	anr								
Cadmium	2000	1990	99.5	2000	2010	100.5	2000	2040	102.0
Calcium	anr								
Chromium	2000	2050	102.5	2000	2080	104.0	2000	2070	103.5
Cobalt	anr								
Copper	anr								
Iron	anr								
Lead	2000	1900	95.0	2000	1900	95.0	2000	2000	100.0
Magnesium	anr								
Manganese	anr								
Molybdenum	anr								
Nickel	anr								
Potassium	anr								
Selenium	2000	2070	103.5	2000	2140	107.0	2000	2020	101.0
Silver	250	246	98.4	250	251	100.4	250	246	98.4
Sodium	anr								
Strontium									
Thallium	anr								
Tin	anr								
Titanium									
Vanadium	anr								
Zinc	anr								

(*) Outside of QC limits
(anr) Analyte not requested
(a) No samples for Ba reported in the area bracketed by this QC.

CALIBRATION CHECK STANDARDS SUMMARY
Initial and Continuing Calibration Checks

Login Number: F77897
Account: TETTNOAK - Tetra Tech, Inc
Project: Holloman AFB; Alamogordo, NM

File ID: SA111710M1.ICP Date Analyzed: 11/17/10 Methods: SW846 6010C
QC Limits: 90 to 110 % Recovery Run ID: MA8516 Units: ug/l

Time:		13:30			14:19			15:08	
Sample ID:	CCV	CCV6		CCV	CCV7		CCV	CCV8	
Metal	True	Results	% Rec	True	Results	% Rec	True	Results	% Rec
Aluminum	anr								
Antimony	anr								
Arsenic	2000	2000	100.0	2000	1960	98.0	2000	1970	98.5
Barium	2000	2020	101.0	2000	1980	99.0	2000	2000	100.0
Beryllium	anr								
Cadmium	2000	2040	102.0	2000	2010	100.5	2000	2020	101.0
Calcium	anr								
Chromium	2000	2040	102.0	2000	2040	102.0	2000	2030	101.5
Cobalt	anr								
Copper	anr								
Iron	anr								
Lead	2000	1990	99.5	2000	1970	98.5	2000	1980	99.0
Magnesium	anr								
Manganese	anr								
Molybdenum	anr								
Nickel	anr								
Potassium	anr								
Selenium	2000	2010	100.5	2000	1970	98.5	2000	1970	98.5
Silver	250	245	98.0	250	244	97.6	250	244	97.6
Sodium	anr								
Strontium									
Thallium	anr								
Tin	anr								
Titanium									
Vanadium	anr								
Zinc	anr								

(*) Outside of QC limits
(anr) Analyte not requested

CALIBRATION CHECK STANDARDS SUMMARY
Initial and Continuing Calibration Checks

Login Number: F77897
Account: TETTNOAK - Tetra Tech, Inc
Project: Holloman AFB; Alamogordo, NM

File ID: SA111710M1.ICP Date Analyzed: 11/17/10 Methods: SW846 6010C
QC Limits: 90 to 110 % Recovery Run ID: MA8516 Units: ug/l

Time:		15:57			16:45			17:34	
Sample ID:	CCV	CCV9		CCV	CCV10		CCV	CCV11	
Metal	True	Results	% Rec	True	Results	% Rec	True	Results	% Rec
Aluminum	anr								
Antimony	anr								
Arsenic	2000	1970	98.5	2000	1980	99.0	2000	2000	100.0
Barium	2000	2010	100.5	2000	2020	101.0	2000	2030	101.5
Beryllium	anr								
Cadmium	2000	2020	101.0	2000	2020	101.0	2000	2020	101.0
Calcium	anr								
Chromium	2000	2060	103.0	2000	2020	101.0	2000	2030	101.5
Cobalt	anr								
Copper	anr								
Iron	anr								
Lead	2000	2000	100.0	2000	1970	98.5	2000	1980	99.0
Magnesium	anr								
Manganese	anr								
Molybdenum	anr								
Nickel	anr								
Potassium	anr								
Selenium	2000	1960	98.0	2000	1990	99.5	2000	2010	100.5
Silver	250	246	98.4	250	244	97.6	250	245	98.0
Sodium	anr								
Strontium									
Thallium	anr								
Tin	anr								
Titanium									
Vanadium	anr								
Zinc	anr								

(*) Outside of QC limits
(anr) Analyte not requested

CALIBRATION CHECK STANDARDS SUMMARY
Initial and Continuing Calibration Checks

Login Number: F77897
Account: TETTNOAK - Tetra Tech, Inc
Project: Holloman AFB; Alamogordo, NM

File ID: SA111710M1.ICP Date Analyzed: 11/17/10 Methods: SW846 6010C
QC Limits: 90 to 110 % Recovery Run ID: MA8516 Units: ug/l

Time:		18:24			19:12			20:01	
Sample ID:	CCV	CCV12		CCV	CCV13		CCV	CCV14	
Metal	True	Results	% Rec	True	Results	% Rec	True	Results	% Rec
Aluminum	anr								
Antimony	anr								
Arsenic	2000	1990	99.5	2000	1950	97.5	2000	1980	99.0
Barium	2000	2050	102.5	2000	2050	102.5	2000	2020	101.0
Beryllium	anr								
Cadmium	2000	2010	100.5	2000	1980	99.0	2000	1990	99.5
Calcium	anr								
Chromium	2000	2020	101.0	2000	1990	99.5	2000	2010	100.5
Cobalt	anr								
Copper	anr								
Iron	anr								
Lead	2000	2010	100.5	2000	1990	99.5	2000	1970	98.5
Magnesium	anr								
Manganese	anr								
Molybdenum	anr								
Nickel	anr								
Potassium	anr								
Selenium	2000	1990	99.5	2000	1940	97.0	2000	1980	99.0
Silver	250	251	100.4	250	252	100.8	250	247	98.8
Sodium	anr								
Strontium									
Thallium	anr								
Tin	anr								
Titanium									
Vanadium	anr								
Zinc	anr								

(*) Outside of QC limits
(anr) Analyte not requested

CALIBRATION CHECK STANDARDS SUMMARY
Initial and Continuing Calibration Checks

Login Number: F77897
Account: TETTNOAK - Tetra Tech, Inc
Project: Holloman AFB; Alamogordo, NM

File ID: SA111710M1.ICP Date Analyzed: 11/17/10 Methods: SW846 6010C
QC Limits: 90 to 110 % Recovery Run ID: MA8516 Units: ug/l

Time:		20:51			21:40			22:30	
Sample ID:	CCV	CCV15		CCV	CCV16		CCV	CCV17	
Metal	True	Results	% Rec	True	Results	% Rec	True	Results	% Rec
Aluminum	anr								
Antimony	anr								
Arsenic	2000	1970	98.5	2000	1940	97.0	2000	1970	98.5
Barium	2000	2010	100.5	2000	2000	100.0	2000	2010	100.5
Beryllium	anr								
Cadmium	2000	1990	99.5	2000	1990	99.5	2000	2000	100.0
Calcium	anr								
Chromium	2000	2010	100.5	2000	2010	100.5	2000	2000	100.0
Cobalt	anr								
Copper	anr								
Iron	anr								
Lead	2000	1960	98.0	2000	1970	98.5	2000	1960	98.0
Magnesium	anr								
Manganese	anr								
Molybdenum	anr								
Nickel	anr								
Potassium	anr								
Selenium	2000	1980	99.0	2000	1930	96.5	2000	1970	98.5
Silver	250	243	97.2	250	246	98.4	250	242	96.8
Sodium	anr								
Strontium									
Thallium	anr								
Tin	anr								
Titanium									
Vanadium	anr								
Zinc	anr								

(*) Outside of QC limits
(anr) Analyte not requested

CALIBRATION CHECK STANDARDS SUMMARY
Initial and Continuing Calibration Checks

Login Number: F77897
Account: TETTNOAK - Tetra Tech, Inc
Project: Holloman AFB; Alamogordo, NM

File ID: SA111710M1.ICP Date Analyzed: 11/17/10 Methods: SW846 6010C
QC Limits: 90 to 110 % Recovery Run ID: MA8516 Units: ug/l

Time:		23:19			00:10			01:00	
Sample ID:	CCV	CCV18		CCV	CCV19		CCV	CCV20	
Metal	True	Results	% Rec	True	Results	% Rec	True	Results	% Rec
Aluminum	anr								
Antimony	anr								
Arsenic	2000	1990	99.5	2000	2020	101.0	2000	2100	105.0
Barium	2000	2060	103.0	2000	2060	103.0	2000	2160	108.0
Beryllium	anr								
Cadmium	2000	2000	100.0	2000	2010	100.5	2000	2120	106.0
Calcium	anr								
Chromium	2000	2030	101.5	2000	2030	101.5	2000	2140	107.0
Cobalt	anr								
Copper	anr								
Iron	anr								
Lead	2000	1960	98.0	2000	1920	96.0	2000	2040	102.0
Magnesium	anr								
Manganese	anr								
Molybdenum	anr								
Nickel	anr								
Potassium	anr								
Selenium	2000	2000	100.0	2000	2040	102.0	2000	2100	105.0
Silver	250	246	98.4	250	242	96.8	250	255	102.0
Sodium	anr								
Strontium									
Thallium	anr								
Tin	anr								
Titanium									
Vanadium	anr								
Zinc	anr								

(*) Outside of QC limits
(anr) Analyte not requested

CALIBRATION CHECK STANDARDS SUMMARY
Initial and Continuing Calibration Checks

Login Number: F77897
Account: TETTNOAK - Tetra Tech, Inc
Project: Holloman AFB; Alamogordo, NM

File ID: SA111710M1.ICP Date Analyzed: 11/17/10 Methods: SW846 6010C
QC Limits: 90 to 110 % Recovery Run ID: MA8516 Units: ug/l

Time:		01:29	
Sample ID:	CCV	CCV21	
Metal	True	Results	% Rec
Aluminum	anr		
Antimony	anr		
Arsenic	2000	2320	116.0*(a
Barium	2000	2440	122.0*(b
Beryllium	anr		
Cadmium	2000	2130	106.5
Calcium	anr		
Chromium	2000	2270	113.5*(c
Cobalt	anr		
Copper	anr		
Iron	anr		
Lead	2000	1940	97.0
Magnesium	anr		
Manganese	anr		
Molybdenum	anr		
Nickel	anr		
Potassium	anr		
Selenium	2000	2370	118.5*(d
Silver	250	261	104.4
Sodium	anr		
Strontium			
Thallium	anr		
Tin	anr		
Titanium			
Vanadium	anr		
Zinc	anr		

(*) Outside of QC limits
(anr) Analyte not requested
(a) No samples for As reported in the area bracketed by this QC.
(b) No samples for Ba reported in the area bracketed by this QC.
(c) No samples for Cr reported in the area bracketed by this QC.
(d) No samples for Se reported in the area bracketed by this QC.

HIGH STANDARD CHECK SUMMARY

Login Number: F77897
Account: TETTNOAK - Tetra Tech, Inc
Project: Holloman AFB; Alamogordo, NM

File ID: SA111710M1.ICP Date Analyzed: 11/17/10 Methods: SW846 6010C
QC Limits: 95 to 105 % Recovery Run ID: MA8516 Units: ug/l

Time:		09:17	
Sample ID:	HSTD	HSTD1	
Metal	True	Results	% Rec
Aluminum	anr		
Antimony	anr		
Arsenic	4000	4000	100.0
Barium	4000	4000	100.0
Beryllium	anr		
Cadmium	4000	3950	98.8
Calcium	anr		
Chromium	4000	3880	97.0
Cobalt	anr		
Copper	anr		
Iron	anr		
Lead	4000	4000	100.0
Magnesium	anr		
Manganese	anr		
Molybdenum	anr		
Nickel	anr		
Potassium	anr		
Selenium	4000	4000	100.0
Silver	500	500	100.0
Sodium	anr		
Strontium			
Thallium	anr		
Tin	anr		
Titanium			
Vanadium	anr		
Zinc	anr		

(*) Outside of QC limits
(anr) Analyte not requested

LOW CALIBRATION CHECK STANDARDS SUMMARY

Login Number: F77897
Account: TETTNOAK - Tetra Tech, Inc
Project: Holloman AFB; Alamogordo, NM

File ID: SA111710M1.ICP Date Analyzed: 11/17/10 Methods: SW846 6010C
QC Limits: CRI 70-130% CRIA 70-130% Run ID: MA8516 Units: ug/l

Time:			09:35		01:16	
Sample ID:	CRI	CRIA	CRIA1		CRIA2	
Metal	True	True	Results	% Rec	Results	% Rec
Aluminum	400	200	anr			
Antimony	10	5.0	anr			
Arsenic	20	10	9.8	98.0	11.8	118.0
Barium	400	200	208	104.0	216	108.0
Beryllium	10	5.0	anr			
Cadmium	10	5.0	5.3	106.0	5.3	106.0
Calcium	2000	1000	anr			
Chromium	20	10	10.9	109.0	12.1	121.0
Cobalt	100	50	anr			
Copper	50	25	anr			
Iron	600	300	anr			
Lead	10	5.0	5.2	104.0	4.7	94.0
Magnesium	10000	5000	anr			
Manganese	30	15	anr			
Molybdenum	100	50	anr			
Nickel	80	40	anr			
Potassium	20000	10000	anr			
Selenium	20	10	8.4	84.0	12.3	123.0
Silver	20	10	9.4	94.0	8.5	85.0
Sodium	20000	10000	anr			
Strontium	20	10				
Thallium	20	10	anr			
Tin	100	50	anr			
Titanium	20	10				
Vanadium	100	50	anr			
Zinc	40	20	anr			

(*) Outside of QC limits
(anr) Analyte not requested

INTERFERING ELEMENT CHECK STANDARDS SUMMARY
Part 1 - ICSA and ICSAB Standards

Login Number: F77897
Account: TETTNOAK - Tetra Tech, Inc
Project: Holloman AFB; Alamogordo, NM

File ID: SA111710M1.ICP Date Analyzed: 11/17/10 Methods: SW846 6010C
QC Limits: 80 to 120 % Recovery Run ID: MA8516 Units: ug/l

Time:			09:42		09:49		01:20		01:25	
Sample ID:	ICSA	ICSAB	ICSA1		ICSAB1		ICSA2		ICSAB2	
Metal	True	True	Results	% Rec	Results	% Rec	Results	% Rec	Results	% Rec
Aluminum	500000	500000	492000	98.4	504000	100.8	549000	109.8	546000	109.2
Antimony		1000	0.90		990	99.0	-1.5		1150	115.0
Arsenic		1000	0.90		1010	101.0	-0.20		1120	112.0
Barium		500	2.5		520	104.0	-3.6		605	121.0*(b
Beryllium		500	-0.10		496	99.2	-0.10		493	98.6
Cadmium		1000	0.0		931	93.1	5.0		915	91.5
Calcium	500000	500000	459000	91.8	463000	92.6	407000	81.4	402000	80.4
Chromium		500	0.0		417	83.4	-0.20		440	88.0
Cobalt		500	0.30		489	97.8	0.50		461	92.2
Copper		500	0.0		500	100.0	0.30		586	117.2
Iron	200000	200000	185000	92.5	183000	91.5	170000	85.0	168000	84.0
Lead		1000	0.0		983	98.3	8.9		901	90.1
Magnesium	500000	500000	510000	102.0	517000	103.4	466000	93.2	467000	93.4
Manganese		500	0.40		427	85.4	0.60		457	91.4
Molybdenum		1000	0.20		954	95.4	0.20		1020	102.0
Nickel		1000	0.0		979	97.9	1.4		911	91.1
Potassium			-14		-40		18.3		-12	
Selenium		1000	-0.10		977	97.7	-20* (a)		1100	110.0
Silver		1000	0.70		1100	110.0	-0.10		1120	112.0
Sodium			-420		-320		-1100		-1400	
Strontium		1000	-5.8		-5.8	0.0*	-3.6		-3.6	0.0*
Thallium		1000	0.0		936	93.6	-3.1		894	89.4
Tin		1000	3.0		920	92.0	3.5		834	83.4
Titanium		1000	0.70		0.90	0.0*	1.3		2.4	0.2*
Vanadium		500	0.60		431	86.2	1.0		487	97.4
Zinc		1000	-4.3		888	88.8	-5.0		767	76.7*(c)

(*) Outside of QC limits
(anr) Analyte not requested
(a) Possible instrument baseline drift.
(b) High recovery due to instrument drift.
(c) Low recovery due to instrument drift.

Accutest Laboratories Instrument Runlog
Inorganics Analyses

Login Number: F77897
Account: TETTNOAK - Tetra Tech, Inc
Project: Holloman AFB; Alamogordo, NM

File ID: H21118S5.PRN Date Analyzed: 11/18/10 Methods: SW846 7471B
Analyst: LM Run ID: MA8518
Parameters: Hg

Time	Sample Description	Dilution Factor	PS Recov	Comments
08:54	MA8518-STD1	1		STD02REP1
08:56	MA8518-STD2	1		STD03REP1
08:58	MA8518-STD3	1		STD04REP1
09:01	MA8518-STD4	1		STD05REP1
09:03	MA8518-STD5	1		STD06REP1
09:07	MA8518-STD6	1		STD01REP1
09:10	MA8518-HSTD1	1		
09:12	MA8518-ICV1	1		
09:14	MA8518-ICB1	1		
09:17	MA8518-CRI1	1		
09:32	MA8518-CCV1	1		
09:34	MA8518-CCB1	1		
09:36	MP19499-MB1	1		
09:38	MP19499-B1	1		
09:40	F77991-3	1		(sample used for QC only; not part of login F77897)
09:42	MP19499-D1	1		
09:45	MP19499-SD1	5		
09:47	MP19499-S1	1		
09:49	MP19499-S2	1		
09:52	ZZZZZZ	1		
09:55	ZZZZZZ	1		
09:57	ZZZZZZ	1		
09:59	MA8518-CCV2	1		
10:02	MA8518-CCB2	1		
10:13	ZZZZZZ	1		
10:16	ZZZZZZ	1		
10:18	ZZZZZZ	1		
10:20	ZZZZZZ	1		
10:23	ZZZZZZ	1		
10:25	ZZZZZZ	1		
10:27	ZZZZZZ	1		
10:29	ZZZZZZ	1		
10:32	ZZZZZZ	1		

Accutest Laboratories Instrument Runlog
Inorganics Analyses

Login Number: F77897
Account: TETTNOAK - Tetra Tech, Inc
Project: Holloman AFB; Alamogordo, NM

File ID: H21118S5.PRN Date Analyzed: 11/18/10 Methods: SW846 7471B
Analyst: LM Run ID: MA8518
Parameters: Hg

Time	Sample Description	Dilution Factor	PS Recov	Comments
10:34	ZZZZZZ	1		
10:36	MA8518-CCV3	1		
10:39	MA8518-CCB3	1		
10:41	ZZZZZZ	1		
10:43	ZZZZZZ	1		
10:46	ZZZZZZ	1		
10:48	ZZZZZZ	1		
10:50	ZZZZZZ	1		
10:53	ZZZZZZ	1		
10:55	MP19500-MB1	1		
10:58	MP19500-B1	1		
11:00	F77969-2	1		(sample used for QC only; not part of login F77897)
11:02	MP19500-D1	1		
11:05	MA8518-CCV4	1		
11:08	MA8518-CCB4	1		
11:10	MP19500-SD1	5		
11:12	MP19500-S1	1		
11:15	MP19500-S2	1		
11:17	ZZZZZZ	1		
11:19	F77897-36	1		
11:21	F77897-37	1		
11:23	F77897-38	1		
---------->	Last reportable sample/prep for job F77897			
11:26	ZZZZZZ	1		
11:28	ZZZZZZ	1		
11:30	ZZZZZZ	1		
11:32	MA8518-CCV5	1		
11:34	MA8518-CCB5	1		
11:37	ZZZZZZ	1		
11:39	ZZZZZZ	1		
11:42	ZZZZZZ	1		
11:44	ZZZZZZ	1		
11:46	ZZZZZZ	1		
11:48	ZZZZZZ	1		

Accutest Laboratories Instrument Runlog
Inorganics Analyses

Login Number: F77897
Account: TETTNOAK - Tetra Tech, Inc
Project: Holloman AFB; Alamogordo, NM

File ID: H21118S5.PRN Date Analyzed: 11/18/10 Methods: SW846 7471B
Analyst: LM Run ID: MA8518
Parameters: Hg

Time	Sample Description	Dilution Factor	PS Recov	Comments
11:51	ZZZZZZ	1		
11:53	ZZZZZZ	1		
11:55	ZZZZZZ	1		
11:58	MA8518-CRI2	1		
12:00	MA8518-CCV6	1		
12:02	MA8518-CCB6	1		

----------> Last reportable CCB for job F77897
Refer to raw data for calibration curve and standards.

BLANK RESULTS SUMMARY
Part 1 - Initial and Continuing Calibration Blanks

Login Number: F77897
Account: TETTNOAK - Tetra Tech, Inc
Project: Holloman AFB; Alamogordo, NM

File ID: H21118S5.PRN Date Analyzed: 11/18/10 Methods: SW846 7471B
QC Limits: result < RL Run ID: MA8518 Units: ug/l

Time:			09:14		09:34		10:02		10:39	
Sample ID:			ICB1		CCB1		CCB2		CCB3	
Metal	RL	IDL	raw	final	raw	final	raw	final	raw	final
Mercury	1.0	.071	-0.027	<1.0	-0.078	<1.0	-0.022	<1.0	0.048	<1.0

(*) Outside of QC limits
(anr) Analyte not requested

BLANK RESULTS SUMMARY
Part 1 - Initial and Continuing Calibration Blanks

Login Number: F77897
Account: TETTNOAK - Tetra Tech, Inc
Project: Holloman AFB; Alamogordo, NM

File ID: H21118S5.PRN Date Analyzed: 11/18/10 Methods: SW846 7471B
QC Limits: result < RL Run ID: MA8518 Units: ug/l

Time:			11:08		11:34		12:02	
Sample ID:			CCB4		CCB5		CCB6	
Metal	RL	IDL	raw	final	raw	final	raw	final
Mercury	1.0	.071	0.15	<1.0	-0.070	<1.0	-0.10	<1.0

(*) Outside of QC limits
(anr) Analyte not requested

CALIBRATION CHECK STANDARDS SUMMARY
Initial and Continuing Calibration Checks

Login Number: F77897
Account: TETTNOAK - Tetra Tech, Inc
Project: Holloman AFB; Alamogordo, NM

File ID: H21118S5.PRN Date Analyzed: 11/18/10 Methods: SW846 7471B
QC Limits: 90 to 110 % Recovery Run ID: MA8518 Units: ug/l

Time:		09:12			09:32			09:59	
Sample ID:	ICV	ICV1		CCV	CCV1		CCV	CCV2	
Metal	True	Results	% Rec	True	Results	% Rec	True	Results	% Rec
Mercury	3	2.8	93.3	3.0	3.0	100.0	3	3.2	106.7

(*) Outside of QC limits
(anr) Analyte not requested

CALIBRATION CHECK STANDARDS SUMMARY
Initial and Continuing Calibration Checks

Login Number: F77897
Account: TETTNOAK - Tetra Tech, Inc
Project: Holloman AFB; Alamogordo, NM

File ID: H21118S5.PRN Date Analyzed: 11/18/10 Methods: SW846 7471B
QC Limits: 90 to 110 % Recovery Run ID: MA8518 Units: ug/l

Time:		10:36			11:05			11:32	
Sample ID:	CCV	CCV3		CCV	CCV4		CCV	CCV5	
Metal	True	Results	% Rec	True	Results	% Rec	True	Results	% Rec
Mercury	3	3.2	106.7	3	3.2	106.7	3	3.1	103.3

(*) Outside of QC limits
(anr) Analyte not requested

CALIBRATION CHECK STANDARDS SUMMARY
Initial and Continuing Calibration Checks

Login Number: F77897
Account: TETTNOAK - Tetra Tech, Inc
Project: Holloman AFB; Alamogordo, NM

File ID: H21118S5.PRN Date Analyzed: 11/18/10 Methods: SW846 7471B
QC Limits: 90 to 110 % Recovery Run ID: MA8518 Units: ug/l

Time:		12:00	
Sample ID:	CCV	CCV6	
Metal	True	Results	% Rec
Mercury	3.0	3.0	100.0

(*) Outside of QC limits
(anr) Analyte not requested

HIGH STANDARD CHECK SUMMARY

Login Number: F77897
Account: TETTNOAK - Tetra Tech, Inc
Project: Holloman AFB; Alamogordo, NM

File ID: H21118S5.PRN Date Analyzed: 11/18/10 Methods: SW846 7471B
QC Limits: 95 to 105 % Recovery Run ID: MA8518 Units: ug/l

Time:		09:10	
Sample ID:	HSTD	HSTD1	
Metal	True	Results	% Rec
Mercury	6	5.9	98.3

(*) Outside of QC limits
(anr) Analyte not requested

LOW CALIBRATION CHECK STANDARDS SUMMARY

Login Number: F77897
Account: TETTNOAK - Tetra Tech, Inc
Project: Holloman AFB; Alamogordo, NM

File ID: H21118S5.PRN Date Analyzed: 11/18/10 Methods: SW846 7471B
QC Limits: 80 to 120 % Recovery Run ID: MA8518 Units: ug/l

Time:			09:17		11:58	
Sample ID:	CRI	CRIA	CRI1		CRI2	
Metal	True	True	Results	% Rec	Results	% Rec
Mercury	0.20		0.20	100.0	0.30	150.0*(a

(*) Outside of QC limits
(anr) Analyte not requested
(a) Possible instrument baseline drift.

9.9.4

9

Accutest Laboratories Instrument Runlog
Inorganics Analyses

Login Number: F77897
Account: TETTNOAK - Tetra Tech, Inc
Project: Holloman AFB; Alamogordo, NM

File ID: SA111810M1.ICP Date Analyzed: 11/18/10 Methods: SW846 6010C
Analyst: RS Run ID: MA8519
Parameters: As,Ba,Cd,Cr,Pb,Se,Ag

Time	Sample Description	Dilution Factor	PS Recov	Comments
07:41	MA8519-STD1	1		STDA
07:44	MA8519-STD2	1		STDB
07:47	MA8519-STD3	1		STDC
07:51	MA8519-HSTD1	1		
07:54	MA8519-ICV1	1		
08:01	MA8519-ICB1	1		
08:05	MA8519-CRIA1	1		
08:28	MA8519-CRIA2	1		
08:35	MA8519-ICSA1	1		
08:40	MA8519-ICSAB1	1		
08:43	MA8519-CCV1	1		
08:48	MA8519-CCB1	1		
09:47	F78081-3	5		(sample used for QC only; not part of login F77897)
09:51	MP19487-D1	5		
09:55	MP19487-S1	5		
09:59	MP19487-S2	5		
10:03	MP19487-PS1	5		
10:07	MP19487-SD1	25		
10:11	ZZZZZZ	5		
10:15	ZZZZZZ	5		
10:19	ZZZZZZ	5		
10:23	F78075-1	10		(sample used for QC only; not part of login F77897)
10:27	MA8519-CCV2	1		
10:31	MA8519-CCB2	1		
10:35	MP19491-D1	10		
10:39	MP19491-S1	10		
10:43	MP19491-S2	10		
10:47	MP19491-PS1	10		
10:51	MP19491-SD1	50		
10:55	ZZZZZZ	10		
10:59	ZZZZZZ	5		
11:03	F77924-1	2		(sample used for QC only; not part of login F77897)
11:07	MP19494-D1	2		

Accutest Laboratories Instrument Runlog
Inorganics Analyses

Login Number: F77897
Account: TETTNOAK - Tetra Tech, Inc
Project: Holloman AFB; Alamogordo, NM

File ID: SA111810M1.ICP Date Analyzed: 11/18/10 Methods: SW846 6010C
Analyst: RS Run ID: MA8519
Parameters: As,Ba,Cd,Cr,Pb,Se,Ag

Time	Sample Description	Dilution Factor	PS Recov	Comments
11:11	MP19494-S1	2		
11:15	MA8519-CCV3	1		
11:19	MA8519-CCB3	1		
11:23	MP19494-S2	2		
11:27	MP19494-PS1	2		
11:31	MP19494-SD1	10		
11:35	ZZZZZZ	10		
11:39	ZZZZZZ	5		
11:43	ZZZZZZ	20		
11:47	ZZZZZZ	50		
11:52	ZZZZZZ	10		
11:56	ZZZZZZ	4		
12:00	ZZZZZZ	4		
12:04	MA8519-CCV4	1		
12:08	MA8519-CCB4	1		
12:12	ZZZZZZ	4		
12:17	ZZZZZZ	4		
12:21	F77904-1	10		(sample used for QC only; not part of login F77897)
12:25	MP19492-D1	10		
12:29	MP19492-S1	10		
12:33	MP19492-S2	10		
12:37	MP19492-PS1	10		
12:41	MP19492-SD1	50		
12:50	ZZZZZZ	5		
12:54	MA8519-CCV5	1		
12:58	MA8519-CCB5	1		
13:02	ZZZZZZ	5		
13:18	ZZZZZZ	10		
13:22	ZZZZZZ	10		
13:26	ZZZZZZ	5		
13:31	ZZZZZZ	10		
13:35	ZZZZZZ	10		
13:39	ZZZZZZ	5		

Accutest Laboratories Instrument Runlog
Inorganics Analyses

Login Number: F77897
Account: TETTNOAK - Tetra Tech, Inc
Project: Holloman AFB; Alamogordo, NM

File ID: SA111810M1.ICP Date Analyzed: 11/18/10 Methods: SW846 6010C
Analyst: RS Run ID: MA8519
Parameters: As,Ba,Cd,Cr,Pb,Se,Ag

Time	Sample Description	Dilution Factor	PS Recov	Comments
13:43	MA8519-CCV6	1		
13:47	MA8519-CCB6	1		
13:51	ZZZZZZ	2		
13:55	ZZZZZZ	4		
13:59	ZZZZZZ	2		
14:03	ZZZZZZ	5		
14:07	ZZZZZZ	5		
14:11	ZZZZZZ	5		
14:15	ZZZZZZ	5		
14:19	ZZZZZZ	5		
14:23	ZZZZZZ	5		
14:27	ZZZZZZ	20		
14:31	MA8519-CCV7	1		
14:35	MA8519-CCB7	1		
14:39	ZZZZZZ	5		
14:43	ZZZZZZ	400		
14:47	ZZZZZZ	10		
14:51	ZZZZZZ	4		
14:55	MP19496-MB1	1		
14:59	MP19496-B1	1		
15:19	MA8519-CCV8	1		
15:23	MA8519-CCB8	1		
15:35	ZZZZZZ	1		
15:39	ZZZZZZ	1		
15:43	ZZZZZZ	1		
15:47	ZZZZZZ	1		
15:51	ZZZZZZ	1		
15:55	ZZZZZZ	1		
15:59	ZZZZZZ	1		
16:03	ZZZZZZ	1		
16:07	MA8519-CCV9	1		
16:11	MA8519-CCB9	1		
16:27	MA8519-CCV10	1		

Accutest Laboratories Instrument Runlog
Inorganics Analyses

Login Number: F77897
Account: TETTNOAK - Tetra Tech, Inc
Project: Holloman AFB; Alamogordo, NM

File ID: SA111810M1.ICP Date Analyzed: 11/18/10 Methods: SW846 6010C
Analyst: RS Run ID: MA8519
Parameters: As,Ba,Cd,Cr,Pb,Se,Ag

Time	Sample Description	Dilution Factor	PS Recov	Comments
16:33	MA8519-CCB10	1		
16:36	ZZZZZZ	1		
16:40	ZZZZZZ	1		
16:44	ZZZZZZ	1		
16:49	ZZZZZZ	1		
16:53	ZZZZZZ	1		
17:16	MA8519-CCV11	1		
17:20	MA8519-CCB11	1		
17:28	MP19497-MB1	1		
17:33	MP19497-B1	1		
18:04	MA8519-CCV12	1		
18:08	MA8519-CCB12	1		
18:20	ZZZZZZ	1		
18:24	ZZZZZZ	1		
18:28	ZZZZZZ	1		
18:40	ZZZZZZ	1		
18:44	ZZZZZZ	1		
18:48	ZZZZZZ	1		
18:52	MA8519-CCV13	1		
18:56	MA8519-CCB13	1		
19:00	ZZZZZZ	1		
19:04	ZZZZZZ	1		
19:08	ZZZZZZ	1		
19:13	ZZZZZZ	1		
19:17	ZZZZZZ	1		
19:21	ZZZZZZ	1		
19:25	ZZZZZZ	1		
19:29	ZZZZZZ	1		
19:33	MP19501-MB1	1		
19:37	MP19501-B1	1		
19:41	MA8519-CCV14	1		
19:45	MA8519-CCB14	1		
20:18	ZZZZZZ	1		

Accutest Laboratories Instrument Runlog
Inorganics Analyses

Login Number: F77897
Account: TETTNOAK - Tetra Tech, Inc
Project: Holloman AFB; Alamogordo, NM

File ID: SA111810M1.ICP Date Analyzed: 11/18/10 Methods: SW846 6010C
Analyst: RS Run ID: MA8519
Parameters: As,Ba,Cd,Cr,Pb,Se,Ag

Time	Sample Description	Dilution Factor	PS Recov	Comments
20:22	ZZZZZZ	1		
20:30	MA8519-CCV15	1		
20:34	MA8519-CCB15	1		
20:38	ZZZZZZ	1		
20:42	ZZZZZZ	1		
20:46	ZZZZZZ	1		
20:50	ZZZZZZ	1		
20:54	ZZZZZZ	1		
21:02	ZZZZZZ	1		
21:11	ZZZZZZ	1		
21:15	ZZZZZZ	1		
21:19	MA8519-CCV16	1		
21:23	MA8519-CCB16	1		
21:27	ZZZZZZ	1		
21:40	ZZZZZZ	1		
21:44	ZZZZZZ	1		
21:48	MP19502-MB1	1		
21:52	MP19502-B1	1		
21:56	F78118-28	1		(sample used for QC only; not part of login F77897)
22:00	MP19502-D1	1		
22:04	MP19502-SD1	5		
22:08	MA8519-CCV17	1		
22:12	MA8519-CCB17	1		
22:17	MP19502-PS1	1		
22:21	MP19502-S1	1		
22:25	MP19502-S2	1		
22:29	ZZZZZZ	1		
22:33	ZZZZZZ	1		
22:46	ZZZZZZ	1		
22:50	MP19504-MB1	1		
22:54	MP19504-B1	1		
22:58	MA8519-CCV18	1		
23:02	MA8519-CCB18	1		

Accutest Laboratories Instrument Runlog
Inorganics Analyses

Login Number: F77897
Account: TETTNOAK - Tetra Tech, Inc
Project: Holloman AFB; Alamogordo, NM

File ID: SA111810M1.ICP Date Analyzed: 11/18/10 Methods: SW846 6010C
Analyst: RS Run ID: MA8519
Parameters: As,Ba,Cd,Cr,Pb,Se,Ag

Time	Sample Description	Dilution Factor	PS Recov	Comments
23:06	F78096-10	1		(sample used for QC only; not part of login F77897)
23:10	MP19504-D1	1		
23:15	MP19504-SD1	5		
23:19	MP19504-S1	1		
23:23	MP19504-S2	1		
23:26	MP19504-MB2	1		
23:31	MP19504-B2	1		
23:34	MP19503-MB1	1		
23:39	MP19503-B1	1		
23:47	MA8519-CCV19	1		
23:51	MA8519-CCB19	1		
23:55	MP19503-D1	1		
23:59	MP19503-SD1	5		
00:03	MP19503-S1	1		
00:07	MP19503-S2	1		
00:11	ZZZZZZ	1		
00:15	ZZZZZZ	1		
00:19	ZZZZZZ	1		
00:23	F77958-3	1		(sample used for QC only; not part of login F77897)
00:28	MP19503-D2	1		
00:32	MP19503-MB2	1		
00:36	MA8519-CCV20	1		
00:40	MA8519-CCB20	1		
00:44	MP19503-B2	1		
00:48	MP19503-MB3	1		
00:52	MP19503-B3	1		
00:56	MP19503-MB4	1		
01:00	MP19503-B4	1		
01:04	F77897-24	5		
01:09	MP19486-D1	5		
01:13	MP19486-S1	5		
01:17	MP19486-S2	5		
01:21	MP19486-PS1	5		

Accutest Laboratories Instrument Runlog
Inorganics Analyses

Login Number: F77897
Account: TETTNOAK - Tetra Tech, Inc
Project: Holloman AFB; Alamogordo, NM

File ID: SA111810M1.ICP Date Analyzed: 11/18/10 Methods: SW846 6010C
Analyst: RS Run ID: MA8519
Parameters: As,Ba,Cd,Cr,Pb,Se,Ag

Time	Sample Description	Dilution Factor	PS Recov	Comments
01:26	MA8519-CCV21	1		
01:30	MA8519-CCB21	1		
01:34	MP19486-SD1	25		
01:38	F77897-20	10		
01:43	F77897-21	10		
01:47	F77897-22	10		
01:56	F77897-25	10		
02:00	F77897-26	10		
02:05	F77897-27	10		
02:09	F77897-28	10		
02:13	F77897-29	10		
02:18	MA8519-CCV22	1		
02:22	MA8519-CCB22	1		
02:26	F77897-30	10		
02:30	F77897-31	10		
02:39	F77897-33	10		
02:44	F77897-36	10		
02:48	F77897-37	10		
02:53	F77897-38	5		
02:57	F77897-21	5		
03:01	F77897-27	5		
03:06	F77897-28	5		
03:10	MA8519-CCV23	1		
03:14	MA8519-CCB23	1		
03:18	F77897-29	5		
03:23	F77897-30	5		
03:27	F77897-37	1		
03:31	F77897-38	1		
---------->	Last reportable sample/prep for job F77897			
03:36	MA8519-CRIA3	1		
03:40	MA8519-ICSA2	1		
03:44	MA8519-ICSAB2	1		
04:01	MA8519-CCV24	1		
04:05	MA8519-CCB24	1		
---------->	Last reportable CCB for job F77897			

Accutest Laboratories Instrument Runlog
Inorganics Analyses

Login Number: F77897
Account: TETTNOAK - Tetra Tech, Inc
Project: Holloman AFB; Alamogordo, NM

File ID: SA111810M1.ICP Date Analyzed: 11/18/10 Methods: SW846 6010C
Analyst: RS Run ID: MA8519
Parameters: As,Ba,Cd,Cr,Pb,Se,Ag

Time	Sample Description	Dilution Factor	PS Recov	Comments
04:17	MA8519-CCV25	1		
04:21	MA8519-CCB25	1		

Refer to raw data for calibration curve and standards.

INTERNAL STANDARD SUMMARY

Login Number: F77897
Account: TETTNOAK - Tetra Tech, Inc
Project: Holloman AFB; Alamogordo, NM

File ID: SA111810M1.ICP Date Analyzed: 11/18/10 Methods: SW846 6010C
Analyst: RS Run ID: MA8519
Parameters: As,Ba,Cd,Cr,Pb,Se,Ag

Time	Sample Description	Istd#1	Istd#2	Istd#3	Istd#4	Istd#5
07:41	MA8519-STD1	2288	1729	30645	11686	1435
07:44	MA8519-STD2	2186	1724	29589	11535	1196
07:47	MA8519-STD3	2124	1762	29129	11486	1119
07:51	MA8519-HSTD1	2095	1754	28660	11408	1108
07:54	MA8519-ICV1	2157	1734	29179	11464	1188
08:01	MA8519-ICB1	2317 R	1744 R	31018 R	11640 R	1448 R
08:05	MA8519-CRIA1	2245	1717	30146	11583	1357
08:28	MA8519-CRIA2	2266	1732	999999 !	11679	1370
08:35	MA8519-ICSA1	2021	1823	27370	11324	1018
08:40	MA8519-ICSAB1	1997	1807	26979	11155	1000
08:43	MA8519-CCV1	2199	1780	29238	11422	1204
08:48	MA8519-CCB1	2314	1752	30569	11572	1443
09:47	F78081-3	2530	2029	33488	12702	1344
09:51	MP19487-D1	2516	2021	33340	12784	1315
09:55	MP19487-S1	2467	1983	32688	12599	1307
09:59	MP19487-S2	2456	2009	32502	12656	1276
10:03	MP19487-PS1	2451	1988	32560	12605	1317
10:07	MP19487-SD1	2374	1842	31026	11762	1410
10:11	ZZZZZZ	2453	2000	32531	12560	1306
10:15	ZZZZZZ	2406	1941	32141	12450	1320
10:19	ZZZZZZ	2453	2013	32704	12694	1290
10:23	F78075-1	2400	1857	31528	12045	1407
10:27	MA8519-CCV2	2252	1813	29936	11522	1223
10:31	MA8519-CCB2	2354	1796	31111	11744	1465
10:35	MP19491-D1	2411	1884	31850	12115	1414
10:39	MP19491-S1	2397	1853	31310	11991	1372
10:43	MP19491-S2	2425	1877	31884	12016	1391
10:47	MP19491-PS1	2395	1858	31647	11919	1390
10:51	MP19491-SD1	2348	1819	31016	11643	1441
10:55	ZZZZZZ	2408	1860	31699	11952	1412
10:59	ZZZZZZ	2412	1864	32041	12102	1376
11:03	F77924-1	2185	1696	29120	11511	1242
11:07	MP19494-D1	2153	1672	28621	11416	1220

INTERNAL STANDARD SUMMARY

Login Number: F77897
Account: TETTNOAK - Tetra Tech, Inc
Project: Holloman AFB; Alamogordo, NM

File ID: SA111810M1.ICP Date Analyzed: 11/18/10 Methods: SW846 6010C
Analyst: RS Run ID: MA8519
Parameters: As,Ba,Cd,Cr,Pb,Se,Ag

Time	Sample Description	Istd#1	Istd#2	Istd#3	Istd#4	Istd#5
11:11	MP19494-S1	2200	1724	29301	11520	1207
11:15	MA8519-CCV3	2240	1798	30107	11649	1225
11:19	MA8519-CCB3	2327	1793	30760	11687	1464
11:23	MP19494-S2	2198	1715	29505	11575	1214
11:27	MP19494-PS1	2193	1688	29389	11617	1241
11:31	MP19494-SD1	2254	1746	30034	11509	1360
11:35	ZZZZZZ	2342	1855	31586	12494	1254
11:39	ZZZZZZ	2454	1983	32944	13085	1206
11:43	ZZZZZZ	2272	1747	30349	11694	1355
11:47	ZZZZZZ	2283	1771	30401	11761	1368
11:52	ZZZZZZ	2224	1739	30041	11760	1294
11:56	ZZZZZZ	1808	1395	24230	10477	936
12:00	ZZZZZZ	1783	1380	23971	10418	921
12:04	MA8519-CCV4	2196	1784	29832	11520	1222
12:08	MA8519-CCB4	2298	1765	30706	11673	1452
12:12	ZZZZZZ	1915	1496	25639	10823	1015
12:17	ZZZZZZ	1889	1463	25555	10775	1005
12:21	F77904-1	2582	2024	34726	13187	1373
12:25	MP19492-D1	2520	1974	33721	12887	1382
12:29	MP19492-S1	2537	1981	33799	12859	1365
12:33	MP19492-S2	2566	2010	34592	13109	1369
12:37	MP19492-PS1	2558	2002	34628	13065	1362
12:41	MP19492-SD1	2379	1845	31818	12029	1434
12:50	ZZZZZZ	2540	2014	33864	12777	1405
12:54	MA8519-CCV5	2202	1795	30010	11645	1222
12:58	MA8519-CCB5	2267	1764	30501	11590	1442
13:02	ZZZZZZ	2551	2024	34251	13177	1325
13:18	ZZZZZZ	2446	1921	32932	12533	1393
13:22	ZZZZZZ	2596	2044	35022	13241	1378
13:26	ZZZZZZ	2435	1905	33173	12622	1424
13:31	ZZZZZZ	2600	2126	35232	13685	1319
13:35	ZZZZZZ	2491	1964	33865	13084	1384
13:39	ZZZZZZ	2273	2046	30641	11887	1351

INTERNAL STANDARD SUMMARY

Login Number: F77897
Account: TETTNOAK - Tetra Tech, Inc
Project: Holloman AFB; Alamogordo, NM

File ID: SA111810M1.ICP Date Analyzed: 11/18/10 Methods: SW846 6010C
Analyst: RS Run ID: MA8519
Parameters: As,Ba,Cd,Cr,Pb,Se,Ag

Time	Sample Description	Istd#1	Istd#2	Istd#3	Istd#4	Istd#5
13:43	MA8519-CCV6	2203	1783	30190	11726	1231
13:47	MA8519-CCB6	2295	1766	31195	11870	1463
13:51	ZZZZZZ	2281	2299 !	31380	12380	1304
13:55	ZZZZZZ	2486	2240 !	33663	13003	1294
13:59	ZZZZZZ	2707	2598 !	36545	14076	1245
14:03	ZZZZZZ	2349	1962	32345	12654	1264
14:07	ZZZZZZ	2364	1989	32648	12857	1297
14:11	ZZZZZZ	2260	1952	31463	12639	1234
14:15	ZZZZZZ	2313	1933	31748	12525	1301
14:19	ZZZZZZ	2315	1907	32026	12587	1286
14:23	ZZZZZZ	2318	1970	32332	12812	1287
14:27	ZZZZZZ	2248	1800	31185	12291	1366
14:31	MA8519-CCV7	2120	1764	29792	11946	1212
14:35	MA8519-CCB7	2218	1735	30468	11968	1444
14:39	ZZZZZZ	2284	1944	31562	12543	1260
14:43	ZZZZZZ	2228	1717	30682	12140	1374
14:47	ZZZZZZ	1856	1451	25501	11388	1005
14:51	ZZZZZZ	1645	1282	22826	11012	863 !
14:55	MP19496-MB1	2233	1682	30402	11946	1444
14:59	MP19496-B1	2164	1695	29683	11792	1267
15:19	MA8519-CCV8	2229	1806	31020	12173	1251
15:23	MA8519-CCB8	2274	1773	31387	12084	1469
15:35	ZZZZZZ	2693	2324 !	37465	14774 !	1152
15:39	ZZZZZZ	2703	2477 !	37709	14970 !	1223
15:43	ZZZZZZ	2621	2404 !	36694	14681 !	1229
15:47	ZZZZZZ	2935 !	2585 !	40346 !	15724 !	1264
15:51	ZZZZZZ	4106 !	3751 !	57496 !	22821 !	1165
15:55	ZZZZZZ	3773 !	3452 !	52557 !	20936 !	1174
15:59	ZZZZZZ	2598	2436 !	35753	14249	1200
16:03	ZZZZZZ	2532	2404 !	34862	13761	1202
16:07	MA8519-CCV9	2233	1814	30933	12180	1258
16:11	MA8519-CCB9	2300	1792	31704	12210	1488
16:27	MA8519-CCV10	2167	1767	30252	12068	1225

INTERNAL STANDARD SUMMARY

Login Number: F77897
Account: TETTNOAK - Tetra Tech, Inc
Project: Holloman AFB; Alamogordo, NM

File ID: SA111810M1.ICP Date Analyzed: 11/18/10 Methods: SW846 6010C
Analyst: RS Run ID: MA8519
Parameters: As,Ba,Cd,Cr,Pb,Se,Ag

Time	Sample Description	Istd#1	Istd#2	Istd#3	Istd#4	Istd#5
16:33	MA8519-CCB10	2252	1755	30985	11957	1457
16:36	ZZZZZZ	2429	2183 !	33019	13298	1161
16:40	ZZZZZZ	2509	2260 !	34584	13648	1207
16:44	ZZZZZZ	2693	2401 !	37439	15142 !	1144
16:49	ZZZZZZ	2518	2213 !	34792	13757	1273
16:53	ZZZZZZ	2585	2368 !	35354	13897	1226
17:16	MA8519-CCV11	2255	1833	31071	11987	1258
17:20	MA8519-CCB11	2329	1806	32090	12274	1493
17:28	MP19497-MB1	2284	1776	31194	12145	1475
17:33	MP19497-B1	2222	1749	30079	11757	1288
18:04	MA8519-CCV12	2231	1824	30871	12028	1249
18:08	MA8519-CCB12	2323	1811	31774	12143	1491
18:20	ZZZZZZ	2793	2695 !	37940	14935 !	1165
18:24	ZZZZZZ	3067 !	2878 !	41831 !	16556 !	1160
18:28	ZZZZZZ	2693	2555 !	36632	14362	1209
18:40	ZZZZZZ	3360 !	3189 !	45946 !	18291 !	1150
18:44	ZZZZZZ	3183 !	2751 !	43023 !	17154 !	1188
18:48	ZZZZZZ	3216 !	2916 !	43749 !	17358 !	1203
18:52	MA8519-CCV13	2228	1814	30313	11894	1226
18:56	MA8519-CCB13	2356	1809	31384	12019	1482
19:00	ZZZZZZ	3784 !	3284 !	50854 !	19893 !	1203
19:04	ZZZZZZ	2606	2466 !	35503	13974	1234
19:08	ZZZZZZ	2712	2340 !	37141	14792 !	1202
19:13	ZZZZZZ	2684	2327 !	36767	14506	1229
19:17	ZZZZZZ	3446 !	2932 !	46909 !	18397 !	1241
19:21	ZZZZZZ	2985 !	2534 !	40270 !	15754 !	1274
19:25	ZZZZZZ	2589	2188 !	35073	13753	1276
19:29	ZZZZZZ	2480	2448 !	34110	13493	1211
19:33	MP19501-MB1	2334	1766	31210	11937	1475
19:37	MP19501-B1	2229	1749	30064	11940	1279
19:41	MA8519-CCV14	2259	1834	30664	11905	1242
19:45	MA8519-CCB14	2364	1819	31883	12039	1487
20:18	ZZZZZZ	3892 !	3473 !	53220 !	20795 !	1237

INTERNAL STANDARD SUMMARY

Login Number: F77897
Account: TETTNOAK - Tetra Tech, Inc
Project: Holloman AFB; Alamogordo, NM

File ID: SA111810M1.ICP Date Analyzed: 11/18/10 Methods: SW846 6010C
Analyst: RS Run ID: MA8519
Parameters: As,Ba,Cd,Cr,Pb,Se,Ag

Time	Sample Description	Istd#1	Istd#2	Istd#3	Istd#4	Istd#5
20:22	ZZZZZZ	3447 !	3082 !	47286 !	18443 !	1259
20:30	MA8519-CCV15	2252	1823	30780	12002	1246
20:34	MA8519-CCB15	2364	1826	31817	12172	1498
20:38	ZZZZZZ	2248	2004	30818	12380	1161
20:42	ZZZZZZ	2331	2109	31378	12304	1297
20:46	ZZZZZZ	2284	2305 !	31177	12327	1212
20:50	ZZZZZZ	2290	2218 !	31297	12372	1229
20:54	ZZZZZZ	2917 !	2625 !	39356 !	15331 !	1283
21:02	ZZZZZZ	2368	2123	32108	12643	1249
21:11	ZZZZZZ	2546	2262 !	34233	13420	1244
21:15	ZZZZZZ	3127 !	3055 !	43044 !	17116 !	1138
21:19	MA8519-CCV16	2246	1824	30515	11855	1238
21:23	MA8519-CCB16	2333	1802	31419	11930	1469
21:27	ZZZZZZ	2822	2812 !	38715	15475 !	1118
21:40	ZZZZZZ	2375	2146	31816	12381	1284
21:44	ZZZZZZ	2880	2690 !	39096 !	15343 !	1175
21:48	MP19502-MB1	2325	1794	31508	11761	1465
21:52	MP19502-B1	2252	1762	29926	11648	1292
21:56	F78118-28	3210 !	2853 !	43637 !	17091 !	1217
22:00	MP19502-D1	2978 !	2632 !	40516 !	15842 !	1217
22:04	MP19502-SD1	2580	2091	34247	13075	1374
22:08	MA8519-CCV17	2232	1796	30221	11563	1227
22:12	MA8519-CCB17	2372	1826	31586	11920	1490
22:17	MP19502-PS1	3135 !	2791 !	42704 !	16788 !	1193
22:21	MP19502-S1	3027 !	2758 !	41461 !	16310 !	1148
22:25	MP19502-S2	3010 !	2776 !	40838 !	16201 !	1151
22:29	ZZZZZZ	3413 !	3096 !	46597 !	18388 !	1090
22:33	ZZZZZZ	3091 !	2951 !	41793 !	16403 !	1138
22:46	ZZZZZZ	2638	2487 !	35815	13963	1196
22:50	MP19504-MB1	2348	1784	30685	12083	1485
22:54	MP19504-B1	2260	1779	30552	11765	1292
22:58	MA8519-CCV18	2208	1790	29861	11473	1214
23:02	MA8519-CCB18	2342	1813	31274	11682	1479

INTERNAL STANDARD SUMMARY

Login Number: F77897
Account: TETTNOAK - Tetra Tech, Inc
Project: Holloman AFB; Alamogordo, NM

File ID: SA111810M1.ICP Date Analyzed: 11/18/10 Methods: SW846 6010C
Analyst: RS Run ID: MA8519
Parameters: As,Ba,Cd,Cr,Pb,Se,Ag

Time	Sample Description	Istd#1	Istd#2	Istd#3	Istd#4	Istd#5
23:06	F78096-10	2236	1716	30480	11826	1376
23:10	MP19504-D1	2252	1750	30922	11979	1389
23:15	MP19504-SD1	2321	1800	31176	11832	1464
23:19	MP19504-S1	2197	1747	29733	11626	1253
23:23	MP19504-S2	2189	1755	30114	11795	1248
23:26	MP19504-MB2	2150	1668	28974	11608	1253
23:31	MP19504-B2	2138	1702	29004	11555	1177
23:34	MP19503-MB1	2346	1818	31771	11965	1490
23:39	MP19503-B1	2215	1760	29987	11628	1279
23:47	MA8519-CCV19	2204	1793	30151	11564	1221
23:51	MA8519-CCB19	2325	1808	31271	11638	1469
23:55	MP19503-D1	2195	1685	29737	11671	1290
23:59	MP19503-SD1	2280	1752	30854	11747	1379
00:03	MP19503-S1	2135	1685	29002	11467	1184
00:07	MP19503-S2	2147	1700	29138	11549	1196
00:11	ZZZZZZ	2100	1634	29214	11488	1228
00:15	ZZZZZZ	2152	1669	29121	11591	1260
00:19	ZZZZZZ	2116	1650	28672	11613	1231
00:23	F77958-3	2164	1762	30712	11515	1261
00:28	MP19503-D2	2156	1665	29031	11552	1248
00:32	MP19503-MB2	2191	1717	29528	11580	1287
00:36	MA8519-CCV20	2214	1773	29586	11296	1231
00:40	MA8519-CCB20	2342	1799	31420	11754	1483
00:44	MP19503-B2	2152	1708	29302	11662	1203
00:48	MP19503-MB3	2308	1761	31485	11892	1481
00:52	MP19503-B3	2207	1758	30389	11841	1287
00:56	MP19503-MB4	2169	1695	29471	11670	1271
01:00	MP19503-B4	2137	1697	29209	11512	1187
01:04	F77897-24	2089	1666	28555	11354	1115
01:09	MP19486-D1	2072	1656	28374	11402	1107
01:13	MP19486-S1	2060	1647	28431	11390	1079
01:17	MP19486-S2	2070	1667	28583	11441	1088
01:21	MP19486-PS1	2100	1684	29069	11553	1131

INTERNAL STANDARD SUMMARY

Login Number: F77897
Account: TETTNOAK - Tetra Tech, Inc
Project: Holloman AFB; Alamogordo, NM

File ID: SA111810M1.ICP Date Analyzed: 11/18/10 Methods: SW846 6010C
Analyst: RS Run ID: MA8519
Parameters: As,Ba,Cd,Cr,Pb,Se,Ag

Time	Sample Description	Istd#1	Istd#2	Istd#3	Istd#4	Istd#5
01:26	MA8519-CCV21	2193	1787	30218	11655	1227
01:30	MA8519-CCB21	2316	1799	31426	11728	1480
01:34	MP19486-SD1	2191	1720	29970	11557	1301
01:38	F77897-20	2097	1642	28926	11444	1193
01:43	F77897-21	2116	1711	29232	11582	1160
01:47	F77897-22	2052	1611	28560	11390	1163
01:56	F77897-25	2007	1576	28191	11323	1139
02:00	F77897-26	2035	1612	28549	11525	1175
02:05	F77897-27	2018	1595	28431	11595	1156
02:09	F77897-28	2020	1588	28653	11778	1157
02:13	F77897-29	1964	1570	28182	11818	1133
02:18	MA8519-CCV22	2133	1732	29918	11962	1214
02:22	MA8519-CCB22	2221	1728	30988	11963	1454
02:26	F77897-30	1970	1541	27911	11532	1126
02:30	F77897-31	2003	1565	28453	11662	1163
02:39	F77897-33	2012	1585	28748	11870	1160
02:44	F77897-36	1989	1568	28592	11906	1149
02:48	F77897-37	1942	1530	28121	11801	1138
02:53	F77897-38	1881	1473	27202	11714	1049
02:57	F77897-21	1965	1626	28647	12263	1031
03:01	F77897-27	1902	1524	27714	11972	1068
03:06	F77897-28	1805	1435	26631	11611	1019
03:10	MA8519-CCV23	2002	1629	29300	12058	1173
03:14	MA8519-CCB23	2156	1666	30945	12415	1455
03:18	F77897-29	1787	1421	26221	11365	1014
03:23	F77897-30	1714	1358	25731	11740	983
03:27	F77897-37	1580	1239	23020	10681	759 !
03:31	F77897-38	1649	1358	24538	11046	760 !
03:36	MA8519-CRIA3	2129	1666	30694	12282	1377
03:40	MA8519-ICSA2	1834	1662	26881	11487	974
03:44	MA8519-ICSAB2	1817	1639	26772	11416	963
04:01	MA8519-CCV24	1999	1637	29311	11992	1181
04:05	MA8519-CCB24	2117	1641	30653	12292	1441

INTERNAL STANDARD SUMMARY

Login Number: F77897
Account: TETTNOAK - Tetra Tech, Inc
Project: Holloman AFB; Alamogordo, NM

File ID: SA111810M1.ICP Date Analyzed: 11/18/10 Methods: SW846 6010C
Analyst: RS Run ID: MA8519
Parameters: As,Ba,Cd,Cr,Pb,Se,Ag

Time	Sample Description	Istd#1	Istd#2	Istd#3	Istd#4	Istd#5
04:17	MA8519-CCV25	1984	1614	28981	11868	1172
04:21	MA8519-CCB25	2114	1632	30551	12288	1439

R = Reference for ISTD limits. ! = Outside limits.

LEGEND:

Istd#	Parameter	Limits
Istd#1	Yttrium (2243)	60-125 %
Istd#2	Yttrium (2422)	60-125 %
Istd#3	Yttrium (3242)	60-125 %
Istd#4	Yttrium (3710)	60-125 %
Istd#5	Indium	60-125 %

BLANK RESULTS SUMMARY
Part 1 - Initial and Continuing Calibration Blanks

Login Number: F77897
Account: TETTNOAK - Tetra Tech, Inc
Project: Holloman AFB; Alamogordo, NM

File ID: SA111810M1.ICP Date Analyzed: 11/18/10 Methods: SW846 6010C
QC Limits: result < RL Run ID: MA8519 Units: ug/l

Time:			08:01		08:48		10:31		11:19	
Sample ID:			ICB1		CCB1		CCB2		CCB3	
Metal	RL	IDL	raw	final	raw	final	raw	final	raw	final
Aluminum	200	20								
Antimony	6.0	1	anr							
Arsenic	10	1	-1.1	<10	-0.20	<10	0.50	<10	-0.40	<10
Barium	200	1	-0.80	<200	0.50	<200	0.40	<200	1.7	<200
Beryllium	4.0	.1								
Cadmium	5.0	.1	0.10	<5.0	0.30	<5.0	0.40	<5.0	0.20	<5.0
Calcium	1000	50								
Chromium	10	1	-0.10	<10	0.0	<10	0.30	<10	0.20	<10
Cobalt	50	1	anr							
Copper	25	1	anr							
Iron	300	34	anr							
Lead	5.0	1	-0.20	<5.0	0.10	<5.0	0.20	<5.0	0.0	<5.0
Magnesium	5000	50	anr							
Manganese	15	1	anr							
Molybdenum	50	1								
Nickel	40	1	anr							
Potassium	10000	50	anr							
Selenium	10	2	1.6	<10	2.2	<10	2.2	<10	1.5	<10
Silver	10	1	0.40	<10	0.30	<10	0.20	<10	0.10	<10
Sodium	10000	750	anr							
Strontium	10	1								
Thallium	10	1	anr							
Tin	50	1								
Titanium	10	1.1								
Vanadium	50	1	anr							
Zinc	20	1	anr							

(*) Outside of QC limits
(anr) Analyte not requested

BLANK RESULTS SUMMARY
Part 1 - Initial and Continuing Calibration Blanks

Login Number: F77897
Account: TETTNOAK - Tetra Tech, Inc
Project: Holloman AFB; Alamogordo, NM

File ID: SA111810M1.ICP Date Analyzed: 11/18/10 Methods: SW846 6010C
QC Limits: result < RL Run ID: MA8519 Units: ug/l

Time:			12:08		12:58		13:47		14:35	
Sample ID:			CCB4		CCB5		CCB6		CCB7	
Metal	RL	IDL	raw	final	raw	final	raw	final	raw	final
Aluminum	200	20								
Antimony	6.0	1	anr							
Arsenic	10	1	0.60	<10	0.0	<10	-0.60	<10	-0.60	<10
Barium	200	1	1.3	<200	2.0	<200	-0.70	<200	0.40	<200
Beryllium	4.0	.1								
Cadmium	5.0	.1	0.30	<5.0	0.30	<5.0	0.30	<5.0	0.30	<5.0
Calcium	1000	50								
Chromium	10	1	0.10	<10	0.30	<10	0.30	<10	0.0	<10
Cobalt	50	1	anr							
Copper	25	1	anr							
Iron	300	34	anr							
Lead	5.0	1	0.10	<5.0	0.0	<5.0	-0.30	<5.0	0.40	<5.0
Magnesium	5000	50	anr							
Manganese	15	1	anr							
Molybdenum	50	1								
Nickel	40	1	anr							
Potassium	10000	50	anr							
Selenium	10	2	3.3	<10	1.3	<10	0.60	<10	2.4	<10
Silver	10	1	0.40	<10	0.20	<10	0.20	<10	-0.10	<10
Sodium	10000	750	anr							
Strontium	10	1								
Thallium	10	1	anr							
Tin	50	1								
Titanium	10	1.1								
Vanadium	50	1	anr							
Zinc	20	1	anr							

(*) Outside of QC limits
(anr) Analyte not requested

BLANK RESULTS SUMMARY
Part 1 - Initial and Continuing Calibration Blanks

Login Number: F77897
Account: TETTNOAK - Tetra Tech, Inc
Project: Holloman AFB; Alamogordo, NM

File ID: SA111810M1.ICP Date Analyzed: 11/18/10 Methods: SW846 6010C
QC Limits: result < RL Run ID: MA8519 Units: ug/l

Time:			15:23		16:11		16:33		17:20	
Sample ID:			CCB8		CCB9		CCB10		CCB11	
Metal	RL	IDL	raw	final	raw	final	raw	final	raw	final
Aluminum	200	20								
Antimony	6.0	1	anr							
Arsenic	10	1	-0.20	<10	0.0	<10	0.50	<10	-0.20	<10
Barium	200	1	-1.0	<200	-0.70	<200	1.0	<200	-1.9	<200
Beryllium	4.0	.1								
Cadmium	5.0	.1	0.30	<5.0	0.40	<5.0	0.40	<5.0	0.40	<5.0
Calcium	1000	50								
Chromium	10	1	0.50	<10	0.30	<10	0.30	<10	0.30	<10
Cobalt	50	1	anr							
Copper	25	1	anr							
Iron	300	34	anr							
Lead	5.0	1	-0.10	<5.0	-0.30	<5.0	0.50	<5.0	0.10	<5.0
Magnesium	5000	50	anr							
Manganese	15	1	anr							
Molybdenum	50	1								
Nickel	40	1	anr							
Potassium	10000	50	anr							
Selenium	10	2	2.8	<10	3.0	<10	1.9	<10	0.10	<10
Silver	10	1	0.40	<10	0.40	<10	-0.10	<10	0.10	<10
Sodium	10000	750	anr							
Strontium	10	1								
Thallium	10	1	anr							
Tin	50	1								
Titanium	10	1.1								
Vanadium	50	1	anr							
Zinc	20	1	anr							

(*) Outside of QC limits
(anr) Analyte not requested

BLANK RESULTS SUMMARY
Part 1 - Initial and Continuing Calibration Blanks

Login Number: F77897
Account: TETTNOAK - Tetra Tech, Inc
Project: Holloman AFB; Alamogordo, NM

File ID: SA111810M1.ICP Date Analyzed: 11/18/10 Methods: SW846 6010C
QC Limits: result < RL Run ID: MA8519 Units: ug/l

Time:			18:08		18:56		19:45		20:34	
Sample ID:			CCB12		CCB13		CCB14		CCB15	
Metal	RL	IDL	raw	final	raw	final	raw	final	raw	final
Aluminum	200	20								
Antimony	6.0	1	anr							
Arsenic	10	1	0.20	<10	0.40	<10	-1.1	<10	0.70	<10
Barium	200	1	-0.10	<200	0.20	<200	-0.50	<200	-0.70	<200
Beryllium	4.0	.1								
Cadmium	5.0	.1	0.50	<5.0	0.20	<5.0	0.20	<5.0	0.30	<5.0
Calcium	1000	50								
Chromium	10	1	0.10	<10	0.10	<10	0.10	<10	0.30	<10
Cobalt	50	1	anr							
Copper	25	1	anr							
Iron	300	34	anr							
Lead	5.0	1	0.70	<5.0	-0.30	<5.0	0.10	<5.0	0.20	<5.0
Magnesium	5000	50	anr							
Manganese	15	1	anr							
Molybdenum	50	1								
Nickel	40	1	anr							
Potassium	10000	50	anr							
Selenium	10	2	3.6	<10	1.9	<10	0.20	<10	2.4	<10
Silver	10	1	-0.10	<10	0.20	<10	0.30	<10	0.10	<10
Sodium	10000	750	anr							
Strontium	10	1								
Thallium	10	1	anr							
Tin	50	1								
Titanium	10	1.1								
Vanadium	50	1	anr							
Zinc	20	1	anr							

(*) Outside of QC limits
(anr) Analyte not requested

BLANK RESULTS SUMMARY
Part 1 - Initial and Continuing Calibration Blanks

Login Number: F77897
Account: TETTNOAK - Tetra Tech, Inc
Project: Holloman AFB; Alamogordo, NM

File ID: SA111810M1.ICP Date Analyzed: 11/18/10 Methods: SW846 6010C
QC Limits: result < RL Run ID: MA8519 Units: ug/l

Time:			21:23		22:12		23:02		23:51	
Sample ID:			CCB16		CCB17		CCB18		CCB19	
Metal	RL	IDL	raw	final	raw	final	raw	final	raw	final
Aluminum	200	20								
Antimony	6.0	1	anr							
Arsenic	10	1	0.60	<10	0.50	<10	0.0	<10	0.80	<10
Barium	200	1	-0.40	<200	0.30	<200	1.0	<200	0.50	<200
Beryllium	4.0	.1								
Cadmium	5.0	.1	0.40	<5.0	0.40	<5.0	0.30	<5.0	0.30	<5.0
Calcium	1000	50								
Chromium	10	1	0.40	<10	0.50	<10	0.20	<10	-0.30	<10
Cobalt	50	1	anr							
Copper	25	1	anr							
Iron	300	34	anr							
Lead	5.0	1	0.30	<5.0	-0.70	<5.0	-1.1	<5.0	0.50	<5.0
Magnesium	5000	50	anr							
Manganese	15	1	anr							
Molybdenum	50	1								
Nickel	40	1	anr							
Potassium	10000	50	anr							
Selenium	10	2	-1.1	<10	1.0	<10	2.2	<10	1.1	<10
Silver	10	1	0.20	<10	0.0	<10	0.10	<10	0.20	<10
Sodium	10000	750	anr							
Strontium	10	1								
Thallium	10	1	anr							
Tin	50	1								
Titanium	10	1.1								
Vanadium	50	1	anr							
Zinc	20	1	anr							

(*) Outside of QC limits
(anr) Analyte not requested

BLANK RESULTS SUMMARY
Part 1 - Initial and Continuing Calibration Blanks

Login Number: F77897
Account: TETTNOAK - Tetra Tech, Inc
Project: Holloman AFB; Alamogordo, NM

File ID: SA111810M1.ICP Date Analyzed: 11/18/10 Methods: SW846 6010C
QC Limits: result < RL Run ID: MA8519 Units: ug/l

Time:			00:40		01:30		02:22		03:14	
Sample ID:			CCB20		CCB21		CCB22		CCB23	
Metal	RL	IDL	raw	final	raw	final	raw	final	raw	final
Aluminum	200	20								
Antimony	6.0	1	anr							
Arsenic	10	1	-0.70	<10	1.2	<10	0.80	<10	-0.60	<10
Barium	200	1	0.10	<200	0.40	<200	-1.3	<200	-3.5	<200
Beryllium	4.0	.1								
Cadmium	5.0	.1	0.40	<5.0	0.40	<5.0	0.50	<5.0	0.10	<5.0
Calcium	1000	50								
Chromium	10	1	0.30	<10	0.40	<10	0.50	<10	0.50	<10
Cobalt	50	1	anr							
Copper	25	1	anr							
Iron	300	34	anr							
Lead	5.0	1	-0.10	<5.0	0.40	<5.0	0.20	<5.0	-0.50	<5.0
Magnesium	5000	50	anr							
Manganese	15	1	anr							
Molybdenum	50	1								
Nickel	40	1	anr							
Potassium	10000	50	anr							
Selenium	10	2	1.1	<10	1.3	<10	2.5	<10	2.5	<10
Silver	10	1	0.20	<10	-0.10	<10	0.20	<10	-0.10	<10
Sodium	10000	750	anr							
Strontium	10	1								
Thallium	10	1	anr							
Tin	50	1								
Titanium	10	1.1								
Vanadium	50	1	anr							
Zinc	20	1	anr							

(*) Outside of QC limits
(anr) Analyte not requested

BLANK RESULTS SUMMARY
Part 1 - Initial and Continuing Calibration Blanks

Login Number: F77897
Account: TETTNOAK - Tetra Tech, Inc
Project: Holloman AFB; Alamogordo, NM

File ID: SA111810M1.ICP Date Analyzed: 11/18/10 Methods: SW846 6010C
QC Limits: result < RL Run ID: MA8519 Units: ug/l

Time:			04:05	
Sample ID:			CCB24	
Metal	RL	IDL	raw	final
Aluminum	200	20		
Antimony	6.0	1	anr	
Arsenic	10	1	0.20	<10
Barium	200	1	-3.6	<200
Beryllium	4.0	.1		
Cadmium	5.0	.1	0.10	<5.0
Calcium	1000	50		
Chromium	10	1	0.10	<10
Cobalt	50	1	anr	
Copper	25	1	anr	
Iron	300	34	anr	
Lead	5.0	1	-1.1	<5.0
Magnesium	5000	50	anr	
Manganese	15	1	anr	
Molybdenum	50	1		
Nickel	40	1	anr	
Potassium	10000	50	anr	
Selenium	10	2	2.0	<10
Silver	10	1	0.0	<10
Sodium	10000	750	anr	
Strontium	10	1		
Thallium	10	1	anr	
Tin	50	1		
Titanium	10	1.1		
Vanadium	50	1	anr	
Zinc	20	1	anr	

(*) Outside of QC limits
(anr) Analyte not requested

CALIBRATION CHECK STANDARDS SUMMARY
Initial and Continuing Calibration Checks

Login Number: F77897
Account: TETTNOAK - Tetra Tech, Inc
Project: Holloman AFB; Alamogordo, NM

File ID: SA111810M1.ICP Date Analyzed: 11/18/10 Methods: SW846 6010C
QC Limits: 90 to 110 % Recovery Run ID: MA8519 Units: ug/l

Time:		07:54			08:43			10:27	
Sample ID:	ICV	ICV1		CCV	CCV1		CCV	CCV2	
Metal	True	Results	% Rec	True	Results	% Rec	True	Results	% Rec
Aluminum									
Antimony	anr								
Arsenic	2000	2040	102.0	2000	2010	100.5	2000	1960	98.0
Barium	2000	2070	103.5	2000	2060	103.0	2000	2010	100.5
Beryllium									
Cadmium	2000	2100	105.0	2000	2040	102.0	2000	2010	100.5
Calcium									
Chromium	2000	2090	104.5	2000	2050	102.5	2000	2020	101.0
Cobalt	anr								
Copper	anr								
Iron	anr								
Lead	2000	2050	102.5	2000	2010	100.5	2000	1990	99.5
Magnesium	anr								
Manganese	anr								
Molybdenum									
Nickel	anr								
Potassium	anr								
Selenium	2000	2090	104.5	2000	2010	100.5	2000	1960	98.0
Silver	250	250	100.0	250	252	100.8	250	250	100.0
Sodium	anr								
Strontium									
Thallium	anr								
Tin									
Titanium									
Vanadium	anr								
Zinc	anr								

(*) Outside of QC limits
(anr) Analyte not requested

CALIBRATION CHECK STANDARDS SUMMARY
Initial and Continuing Calibration Checks

Login Number: F77897
Account: TETTNOAK - Tetra Tech, Inc
Project: Holloman AFB; Alamogordo, NM

File ID: SA111810M1.ICP Date Analyzed: 11/18/10 Methods: SW846 6010C
QC Limits: 90 to 110 % Recovery Run ID: MA8519 Units: ug/l

Time:		11:15			12:04			12:54	
Sample ID:	CCV	CCV3		CCV	CCV4		CCV	CCV5	
Metal	True	Results	% Rec	True	Results	% Rec	True	Results	% Rec
Aluminum									
Antimony	anr								
Arsenic	2000	1970	98.5	2000	2000	100.0	2000	2000	100.0
Barium	2000	2010	100.5	2000	2010	100.5	2000	2000	100.0
Beryllium									
Cadmium	2000	2020	101.0	2000	2030	101.5	2000	2030	101.5
Calcium									
Chromium	2000	2050	102.5	2000	2050	102.5	2000	2040	102.0
Cobalt	anr								
Copper	anr								
Iron	anr								
Lead	2000	1990	99.5	2000	1970	98.5	2000	1970	98.5
Magnesium	anr								
Manganese	anr								
Molybdenum									
Nickel	anr								
Potassium	anr								
Selenium	2000	1980	99.0	2000	2010	100.5	2000	2010	100.5
Silver	250	248	99.2	250	243	97.2	250	241	96.4
Sodium	anr								
Strontium									
Thallium	anr								
Tin									
Titanium									
Vanadium	anr								
Zinc	anr								

(*) Outside of QC limits
(anr) Analyte not requested

CALIBRATION CHECK STANDARDS SUMMARY
Initial and Continuing Calibration Checks

Login Number: F77897
Account: TETTNOAK - Tetra Tech, Inc
Project: Holloman AFB; Alamogordo, NM

File ID: SA111810M1.ICP Date Analyzed: 11/18/10 Methods: SW846 6010C
QC Limits: 90 to 110 % Recovery Run ID: MA8519 Units: ug/l

Time:		13:43			14:31			15:19	
Sample ID:	CCV	CCV6		CCV	CCV7		CCV	CCV8	
Metal	True	Results	% Rec	True	Results	% Rec	True	Results	% Rec
Aluminum									
Antimony	anr								
Arsenic	2000	1990	99.5	2000	2050	102.5	2000	1980	99.0
Barium	2000	2010	100.5	2000	2040	102.0	2000	1990	99.5
Beryllium									
Cadmium	2000	2020	101.0	2000	2040	102.0	2000	2000	100.0
Calcium									
Chromium	2000	2050	102.5	2000	2050	102.5	2000	2040	102.0
Cobalt	anr								
Copper	anr								
Iron	anr								
Lead	2000	1950	97.5	2000	1930	96.5	2000	1920	96.0
Magnesium	anr								
Manganese	anr								
Molybdenum									
Nickel	anr								
Potassium	anr								
Selenium	2000	2010	100.5	2000	2090	104.5	2000	2010	100.5
Silver	250	242	96.8	250	240	96.0	250	238	95.2
Sodium	anr								
Strontium									
Thallium	anr								
Tin									
Titanium									
Vanadium	anr								
Zinc	anr								

(*) Outside of QC limits
(anr) Analyte not requested

CALIBRATION CHECK STANDARDS SUMMARY
Initial and Continuing Calibration Checks

Login Number: F77897
Account: TETTNOAK - Tetra Tech, Inc
Project: Holloman AFB; Alamogordo, NM

File ID: SA111810M1.ICP Date Analyzed: 11/18/10 Methods: SW846 6010C
QC Limits: 90 to 110 % Recovery Run ID: MA8519 Units: ug/l

Time:		16:07			16:27			17:16	
Sample ID:	CCV	CCV9		CCV	CCV10		CCV	CCV11	
Metal	True	Results	% Rec	True	Results	% Rec	True	Results	% Rec
Aluminum									
Antimony	anr								
Arsenic	2000	2000	100.0	2000	2030	101.5	2000	1990	99.5
Barium	2000	2010	100.5	2000	2060	103.0	2000	2050	102.5
Beryllium									
Cadmium	2000	2010	100.5	2000	2060	103.0	2000	2040	102.0
Calcium									
Chromium	2000	2050	102.5	2000	2100	105.0	2000	2090	104.5
Cobalt	anr								
Copper	anr								
Iron	anr								
Lead	2000	1920	96.0	2000	2010	100.5	2000	2020	101.0
Magnesium	anr								
Manganese	anr								
Molybdenum									
Nickel	anr								
Potassium	anr								
Selenium	2000	2020	101.0	2000	2030	101.5	2000	1980	99.0
Silver	250	242	96.8	250	251	100.4	250	253	101.2
Sodium	anr								
Strontium									
Thallium	anr								
Tin									
Titanium									
Vanadium	anr								
Zinc	anr								

(*) Outside of QC limits
(anr) Analyte not requested

CALIBRATION CHECK STANDARDS SUMMARY
Initial and Continuing Calibration Checks

Login Number: F77897
Account: TETTNOAK - Tetra Tech, Inc
Project: Holloman AFB; Alamogordo, NM

File ID: SA111810M1.ICP Date Analyzed: 11/18/10 Methods: SW846 6010C
QC Limits: 90 to 110 % Recovery Run ID: MA8519 Units: ug/l

Time:		18:04			18:52			19:41	
Sample ID:	CCV	CCV12		CCV	CCV13		CCV	CCV14	
Metal	True	Results	% Rec	True	Results	% Rec	True	Results	% Rec
Aluminum									
Antimony	anr								
Arsenic	2000	2010	100.5	2000	2020	101.0	2000	1990	99.5
Barium	2000	2050	102.5	2000	2120	106.0	2000	2100	105.0
Beryllium									
Cadmium	2000	2050	102.5	2000	2040	102.0	2000	2020	101.0
Calcium									
Chromium	2000	2080	104.0	2000	2060	103.0	2000	2060	103.0
Cobalt	anr								
Copper	anr								
Iron	anr								
Lead	2000	2020	101.0	2000	2050	102.5	2000	2040	102.0
Magnesium	anr								
Manganese	anr								
Molybdenum									
Nickel	anr								
Potassium	anr								
Selenium	2000	2020	101.0	2000	2010	100.5	2000	1980	99.0
Silver	250	252	100.8	250	260	104.0	250	258	103.2
Sodium	anr								
Strontium									
Thallium	anr								
Tin									
Titanium									
Vanadium	anr								
Zinc	anr								

(*) Outside of QC limits
(anr) Analyte not requested

CALIBRATION CHECK STANDARDS SUMMARY
Initial and Continuing Calibration Checks

Login Number: F77897
Account: TETTNOAK - Tetra Tech, Inc
Project: Holloman AFB; Alamogordo, NM

File ID: SA111810M1.ICP Date Analyzed: 11/18/10 Methods: SW846 6010C
QC Limits: 90 to 110 % Recovery Run ID: MA8519 Units: ug/l

Time:		20:30			21:19			22:08	
Sample ID:	CCV	CCV15		CCV	CCV16		CCV	CCV17	
Metal	True	Results	% Rec	True	Results	% Rec	True	Results	% Rec
Aluminum									
Antimony	anr								
Arsenic	2000	2000	100.0	2000	2010	100.5	2000	2010	100.5
Barium	2000	2100	105.0	2000	2130	106.5	2000	2160	108.0
Beryllium									
Cadmium	2000	2020	101.0	2000	2020	101.0	2000	2030	101.5
Calcium									
Chromium	2000	2070	103.5	2000	2060	103.0	2000	2070	103.5
Cobalt	anr								
Copper	anr								
Iron	anr								
Lead	2000	2020	101.0	2000	2030	101.5	2000	2040	102.0
Magnesium	anr								
Manganese	anr								
Molybdenum									
Nickel	anr								
Potassium	anr								
Selenium	2000	1990	99.5	2000	1990	99.5	2000	1990	99.5
Silver	250	256	102.4	250	260	104.0	250	261	104.4
Sodium	anr								
Strontium									
Thallium	anr								
Tin									
Titanium									
Vanadium	anr								
Zinc	anr								

(*) Outside of QC limits
(anr) Analyte not requested

CALIBRATION CHECK STANDARDS SUMMARY
Initial and Continuing Calibration Checks

Login Number: F77897
Account: TETTNOAK - Tetra Tech, Inc
Project: Holloman AFB; Alamogordo, NM

File ID: SA111810M1.ICP Date Analyzed: 11/18/10 Methods: SW846 6010C
QC Limits: 90 to 110 % Recovery Run ID: MA8519 Units: ug/l

Time:		22:58			23:47			00:36	
Sample ID:	CCV	CCV18		CCV	CCV19		CCV	CCV20	
Metal	True	Results	% Rec	True	Results	% Rec	True	Results	% Rec
Aluminum									
Antimony	anr								
Arsenic	2000	2040	102.0	2000	2020	101.0	2000	2010	100.5
Barium	2000	2180	109.0	2000	2150	107.5	2000	2190	109.5
Beryllium									
Cadmium	2000	2060	103.0	2000	2040	102.0	2000	2030	101.5
Calcium									
Chromium	2000	2090	104.5	2000	2070	103.5	2000	2100	105.0
Cobalt	anr								
Copper	anr								
Iron	anr								
Lead	2000	2070	103.5	2000	2040	102.0	2000	2020	101.0
Magnesium	anr								
Manganese	anr								
Molybdenum									
Nickel	anr								
Potassium	anr								
Selenium	2000	2020	101.0	2000	2010	100.5	2000	2000	100.0
Silver	250	263	105.2	250	258	103.2	250	262	104.8
Sodium	anr								
Strontium									
Thallium	anr								
Tin									
Titanium									
Vanadium	anr								
Zinc	anr								

(*) Outside of QC limits
(anr) Analyte not requested

CALIBRATION CHECK STANDARDS SUMMARY
Initial and Continuing Calibration Checks

Login Number: F77897
Account: TETTNOAK - Tetra Tech, Inc
Project: Holloman AFB; Alamogordo, NM

File ID: SA111810M1.ICP Date Analyzed: 11/18/10 Methods: SW846 6010C
QC Limits: 90 to 110 % Recovery Run ID: MA8519 Units: ug/l

Time:		01:26			02:18			03:10	
Sample ID:	CCV	CCV21		CCV	CCV22		CCV	CCV23	
Metal	True	Results	% Rec	True	Results	% Rec	True	Results	% Rec
Aluminum									
Antimony	anr								
Arsenic	2000	2020	101.0	2000	2050	102.5	2000	2130	106.5
Barium	2000	2130	106.5	2000	2150	107.5	2000	2250	112.5*(a
Beryllium									
Cadmium	2000	2050	102.5	2000	2030	101.5	2000	2060	103.0
Calcium									
Chromium	2000	2080	104.0	2000	2090	104.5	2000	2140	107.0
Cobalt	anr								
Copper	anr								
Iron	anr								
Lead	2000	2020	101.0	2000	1980	99.0	2000	1970	98.5
Magnesium	anr								
Manganese	anr								
Molybdenum									
Nickel	anr								
Potassium	anr								
Selenium	2000	2020	101.0	2000	2060	103.0	2000	2160	108.0
Silver	250	256	102.4	250	254	101.6	250	256	102.4
Sodium	anr								
Strontium									
Thallium	anr								
Tin									
Titanium									
Vanadium	anr								
Zinc	anr								

(*) Outside of QC limits
(anr) Analyte not requested
(a) No samples for Ba reported in the area bracketed by this QC.

CALIBRATION CHECK STANDARDS SUMMARY
Initial and Continuing Calibration Checks

Login Number: F77897
Account: TETTNOAK - Tetra Tech, Inc
Project: Holloman AFB; Alamogordo, NM

File ID: SA111810M1.ICP Date Analyzed: 11/18/10 Methods: SW846 6010C
QC Limits: 90 to 110 % Recovery Run ID: MA8519 Units: ug/l

Time:		04:01	
Sample ID:	CCV	CCV24	
Metal	True	Results	% Rec
Aluminum			
Antimony	anr		
Arsenic	2000	2110	105.5
Barium	2000	2250	112.5*(a
Beryllium			
Cadmium	2000	2030	101.5
Calcium			
Chromium	2000	2120	106.0
Cobalt	anr		
Copper	anr		
Iron	anr		
Lead	2000	1920	96.0
Magnesium	anr		
Manganese	anr		
Molybdenum			
Nickel	anr		
Potassium	anr		
Selenium	2000	2140	107.0
Silver	250	251	100.4
Sodium	anr		
Strontium			
Thallium	anr		
Tin			
Titanium			
Vanadium	anr		
Zinc	anr		

(*) Outside of QC limits
(anr) Analyte not requested
(a) No samples for Ba reported in the area bracketed by this QC.

HIGH STANDARD CHECK SUMMARY

Login Number: F77897
Account: TETTNOAK - Tetra Tech, Inc
Project: Holloman AFB; Alamogordo, NM

File ID: SA111810M1.ICP Date Analyzed: 11/18/10 Methods: SW846 6010C
QC Limits: 95 to 105 % Recovery Run ID: MA8519 Units: ug/l

Time:		07:51	
Sample ID:	HSTD	HSTD1	
Metal	True	Results	% Rec
Aluminum			
Antimony	anr		
Arsenic	4000	4060	101.5
Barium	4000	4020	100.5
Beryllium			
Cadmium	4000	4000	100.0
Calcium			
Chromium	4000	3930	98.3
Cobalt	anr		
Copper	anr		
Iron	anr		
Lead	4000	4020	100.5
Magnesium	anr		
Manganese	anr		
Molybdenum			
Nickel	anr		
Potassium	anr		
Selenium	4000	4050	101.3
Silver	500	505	101.0
Sodium	anr		
Strontium			
Thallium	anr		
Tin			
Titanium			
Vanadium	anr		
Zinc	anr		

(*) Outside of QC limits
(anr) Analyte not requested

LOW CALIBRATION CHECK STANDARDS SUMMARY

Login Number: F77897
Account: TETTNOAK - Tetra Tech, Inc
Project: Holloman AFB; Alamogordo, NM

File ID: SA111810M1.ICP Date Analyzed: 11/18/10 Methods: SW846 6010C
QC Limits: CRI 70-130% CRIA 70-130% Run ID: MA8519 Units: ug/l

Time:			08:05		08:28		03:36	
Sample ID:	CRI	CRIA	CRIA1		CRIA2		CRIA3	
Metal	True	True	Results	% Rec	Results	% Rec	Results	% Rec
Aluminum	400	200						
Antimony	10	5.0						
Arsenic	20	10	10.5	105.0			9.9	99.0
Barium	400	200	208	104.0			221	110.5
Beryllium	10	5.0						
Cadmium	10	5.0	5.4	108.0			5.1	102.0
Calcium	2000	1000						
Chromium	20	10	10.8	108.0			10.8	108.0
Cobalt	100	50	anr					
Copper	50	25	anr					
Iron	600	300	anr					
Lead	10	5.0	5.6	112.0			4.5	90.0
Magnesium	10000	5000	anr					
Manganese	30	15	anr					
Molybdenum	100	50						
Nickel	80	40	anr					
Potassium	20000	10000	anr					
Selenium	20	10	10.9	109.0			11.0	110.0
Silver	20	10	9.6	96.0			9.4	94.0
Sodium	20000	10000	anr					
Strontium	20	10						
Thallium	20	10	anr					
Tin	100	50						
Titanium	20	10						
Vanadium	100	50	anr					
Zinc	40	20	anr					

(*) Outside of QC limits
(anr) Analyte not requested

INTERFERING ELEMENT CHECK STANDARDS SUMMARY
Part 1 - ICSA and ICSAB Standards

Login Number: F77897
Account: TETTNOAK - Tetra Tech, Inc
Project: Holloman AFB; Alamogordo, NM

File ID: SA111810M1.ICP Date Analyzed: 11/18/10 Methods: SW846 6010C
QC Limits: 80 to 120 % Recovery Run ID: MA8519 Units: ug/l

Time:			08:35		08:40		03:40		03:44	
Sample ID:	ICSA	ICSAB	ICSA1		ICSAB1		ICSA2		ICSAB2	
Metal	True	True	Results	% Rec	Results	% Rec	Results	% Rec	Results	% Rec
Aluminum	500000	500000	482000	96.4	489000	97.8	494000	98.8	497000	99.4
Antimony		1000	-1.9		983	98.3	2.1		1060	106.0
Arsenic		1000	1.1		1010	101.0	1.8		1060	106.0
Barium		500	1.6		515	103.0	-2.0		560	112.0
Beryllium		500	-0.10		491	98.2	0.0		473	94.6
Cadmium		1000	-0.70		925	92.5	3.9		924	92.4
Calcium	500000	500000	447000	89.4	450000	90.0	414000	82.8	418000	83.6
Chromium		500	-0.50		415	83.0	-0.40		432	86.4
Cobalt		500	0.40		482	96.4	0.60		475	95.0
Copper		500	0.30		500	100.0	-0.30		531	106.2
Iron	200000	200000	183000	91.5	183000	91.5	172000	86.0	171000	85.5
Lead		1000	-0.40		968	96.8	4.4		939	93.9
Magnesium	500000	500000	504000	100.8	515000	103.0	468000	93.6	473000	94.6
Manganese		500	0.40		421	84.2	0.50		446	89.2
Molybdenum		1000	0.30		951	95.1	0.80		983	98.3
Nickel		1000	0.0		965	96.5	2.3		947	94.7
Potassium			7.7		-16		0.90		-11	
Selenium		1000	0.10		993	99.3	-4.3		1040	104.0
Silver		1000	0.60		1080	108.0	0.10		1100	110.0
Sodium			-360		-1100		-710		-960	
Strontium		1000	-5.5		-5.5	0.0*	-4.3		-4.4	0.0*
Thallium		1000	-0.50		925	92.5	-2.7		909	90.9
Tin		1000	2.7		913	91.3	2.9		883	88.3
Titanium		1000	2.3		3.0	0.3*	3.5		3.5	0.4*
Vanadium		500	0.60		429	85.8	0.50		456	91.2
Zinc		1000	-4.5		883	88.3	-4.6		832	83.2

(*) Outside of QC limits
(anr) Analyte not requested

Accutest Laboratories Instrument Runlog
Inorganics Analyses

Login Number: F77897
Account: TETTNOAK - Tetra Tech, Inc
Project: Holloman AFB; Alamogordo, NM

File ID: SA111910M1.ICP Date Analyzed: 11/19/10 Methods: SW846 6010C
Analyst: RS Run ID: MA8522
Parameters: Ba,Cr,Se

Time	Sample Description	Dilution Factor	PS Recov	Comments
06:04	MA8522-STD1	1		STDA
06:08	MA8522-STD2	1		STDB
06:12	MA8522-STD3	1		STDC
06:15	MA8522-HSTD1	1		
06:19	MA8522-ICV1	1		
06:27	MA8522-ICB1	1		
06:31	MA8522-CRIA1	1		
06:39	MA8522-ICSA1	1		
06:44	MA8522-ICSAB1	1		
06:49	MA8522-CCV1	1		
06:56	MA8522-CCB1	1		
09:12	MA8522-CCV2	1		
09:18	MA8522-CCB2	1		
09:22	ZZZZZZ	20		
09:26	ZZZZZZ	20		
09:30	ZZZZZZ	20		
09:34	ZZZZZZ	20		
09:38	F78117-15	4		(sample used for QC only; not part of login F77897)
09:42	MP19496-D1	4		
09:46	MP19496-S1	4		
09:50	MP19496-S2	4		
09:54	MP19496-PS1	4		
09:58	MP19496-SD1	20		
10:02	MA8522-CCV3	1		
10:06	MA8522-CCB3	1		
10:10	ZZZZZZ	4		
10:14	ZZZZZZ	10		
10:18	ZZZZZZ	5		
10:22	ZZZZZZ	5		
10:26	ZZZZZZ	5		
10:30	ZZZZZZ	5		
10:34	F78117-21	10		(sample used for QC only; not part of login F77897)
10:38	MP19497-D1	10		

Accutest Laboratories Instrument Runlog
Inorganics Analyses

Login Number: F77897
Account: TETTNOAK - Tetra Tech, Inc
Project: Holloman AFB; Alamogordo, NM

File ID: SA111910M1.ICP Date Analyzed: 11/19/10 Methods: SW846 6010C
Analyst: RS Run ID: MA8522
Parameters: Ba,Cr,Se

Time	Sample Description	Dilution Factor	PS Recov	Comments
10:42	MP19497-S1	10		
10:46	MP19497-S2	10		
10:50	MA8522-CCV4	1		
10:54	MA8522-CCB4	1		
10:58	MP19497-PS1	10		
11:02	MP19497-SD1	50		
11:06	ZZZZZZ	10		
11:10	ZZZZZZ	10		
11:14	ZZZZZZ	4		
11:18	ZZZZZZ	4		
11:22	ZZZZZZ	10		
11:26	F78118-20	2		(sample used for QC only; not part of login F77897)
11:30	MP19501-D1	2		
11:34	MP19501-S1	2		
11:38	MA8522-CCV5	1		
11:42	MA8522-CCB5	1		
11:46	MP19501-S2	2		
11:50	MP19501-PS1	2		
11:54	MP19501-SD1	10		
11:58	ZZZZZZ	10		
12:02	ZZZZZZ	2		
12:06	ZZZZZZ	2		
12:10	ZZZZZZ	2		
12:14	ZZZZZZ	2		
12:18	ZZZZZZ	2		
12:23	ZZZZZZ	2		
12:27	MA8522-CCV6	1		
12:31	MA8522-CCB6	1		
12:35	ZZZZZZ	2		
12:39	F78063-1	10		(sample used for QC only; not part of login F77897)
12:43	MP19503-D1	10		
12:47	MP19486-S1	10		
12:47	MP19503-S1	10		

Accutest Laboratories Instrument Runlog
Inorganics Analyses

Login Number: F77897
Account: TETTNOAK - Tetra Tech, Inc
Project: Holloman AFB; Alamogordo, NM

File ID: SA111910M1.ICP Date Analyzed: 11/19/10 Methods: SW846 6010C
Analyst: RS Run ID: MA8522
Parameters: Ba,Cr,Se

Time	Sample Description	Dilution Factor	PS Recov	Comments
12:51	MP19486-S2	10		
12:51	MP19503-S2	10		
12:55	MP19486-SD1	50		
12:55	MP19503-SD1	50		
12:59	MP19505-MB1	1		
13:04	MP19505-B1	1		
13:07	F78137-1	1		(sample used for QC only; not part of login F77897)
13:12	MP19505-D1	1		
13:16	MA8522-CCV7	1		
13:20	MA8522-CCB7	1		
13:28	MP19505-SD1	5		
13:32	MP19505-PS1	1		
13:36	MP19505-S1	1		
13:40	MP19505-S2	1		
13:53	ZZZZZZ	1		
13:57	ZZZZZZ	1		
14:01	ZZZZZZ	1		
14:05	MA8522-CCV8	1		
14:09	MA8522-CCB8	1		
14:13	ZZZZZZ	1		
14:17	ZZZZZZ	1		
14:21	ZZZZZZ	1		
14:25	ZZZZZZ	1		
14:30	ZZZZZZ	1		
14:34	ZZZZZZ	1		
14:38	ZZZZZZ	1		
14:54	MA8522-CCV9	1		
14:58	MA8522-CCB9	1		
15:06	MP19487-D1	10		
15:43	MA8522-CCV10	1		
15:47	MA8522-CCB10	1		
16:32	MA8522-CCV11	1		
16:36	MA8522-CCB11	1		

Accutest Laboratories Instrument Runlog
Inorganics Analyses

Login Number: F77897
Account: TETTNOAK - Tetra Tech, Inc
Project: Holloman AFB; Alamogordo, NM

File ID: SA111910M1.ICP Date Analyzed: 11/19/10 Methods: SW846 6010C
Analyst: RS Run ID: MA8522
Parameters: Ba,Cr,Se

Time	Sample Description	Dilution Factor	PS Recov	Comments
17:20	MA8522-CCV12	1		
17:24	MA8522-CCB12	1		
17:28	MP19514-MB1	1		
17:32	MP19514-B1	1		
17:36	F78020-1	1		(sample used for QC only; not part of login F77897)
17:40	MP19514-D1	1		
17:45	MP19514-SD1	5		
17:49	MP19514-PS1	1		
17:53	MP19514-S1	1		
17:57	MP19514-S2	1		
18:00	ZZZZZZ	1		
18:05	ZZZZZZ	1		
18:09	MA8522-CCV13	1		
18:13	MA8522-CCB13	1		
18:17	ZZZZZZ	1		
18:21	ZZZZZZ	1		
18:25	ZZZZZZ	1		
18:29	ZZZZZZ	1		
18:33	ZZZZZZ	1		
18:37	ZZZZZZ	1		
18:42	ZZZZZZ	1		
18:46	ZZZZZZ	1		
18:50	ZZZZZZ	1		
18:54	ZZZZZZ	1		
18:58	MA8522-CCV14	1		
19:02	MA8522-CCB14	1		
19:06	ZZZZZZ	1		
19:10	ZZZZZZ	1		
19:14	ZZZZZZ	1		
19:19	ZZZZZZ	1		
19:23	ZZZZZZ	1		
19:27	ZZZZZZ	1		
19:31	ZZZZZZ	1		

Accutest Laboratories Instrument Runlog
Inorganics Analyses

Login Number: F77897
Account: TETTNOAK - Tetra Tech, Inc
Project: Holloman AFB; Alamogordo, NM

File ID: SA111910M1.ICP Date Analyzed: 11/19/10 Methods: SW846 6010C
Analyst: RS Run ID: MA8522
Parameters: Ba,Cr,Se

Time	Sample Description	Dilution Factor	PS Recov	Comments
19:35	MP19514-MB2	1		
19:40	MP19510-MB1	1		
19:44	MP19510-B1	1		
19:48	MA8522-CCV15	1		
19:52	MA8522-CCB15	1		
20:22	ZZZZZZ	1		
20:26	ZZZZZZ	1		
20:30	ZZZZZZ	1		
20:34	ZZZZZZ	1		
20:38	MA8522-CCV16	1		
20:42	MA8522-CCB16	1		
20:46	ZZZZZZ	1		
20:50	ZZZZZZ	1		
20:55	ZZZZZZ	1		
20:59	ZZZZZZ	1		
21:03	ZZZZZZ	1		
21:07	ZZZZZZ	1		
21:11	ZZZZZZ	1		
21:15	ZZZZZZ	1		
21:19	ZZZZZZ	1		
21:23	ZZZZZZ	1		
21:28	MA8522-CCV17	1		
21:31	MA8522-CCB17	1		
21:36	ZZZZZZ	1		
21:49	MP19506-MB1	1		
21:53	MP19506-B1	1		
21:57	F77958-1	1		(sample used for QC only; not part of login F77897)
22:01	MP19506-D1	1		
22:05	MP19506-SD1	5		
22:09	MP19506-PS1	1		
22:13	MP19506-S1	1		
22:17	MA8522-CCV18	1		
22:21	MA8522-CCB18	1		

Accutest Laboratories Instrument Runlog
Inorganics Analyses

Login Number: F77897
Account: TETTNOAK - Tetra Tech, Inc
Project: Holloman AFB; Alamogordo, NM

File ID: SA111910M1.ICP Date Analyzed: 11/19/10 Methods: SW846 6010C
Analyst: RS Run ID: MA8522
Parameters: Ba,Cr,Se

Time	Sample Description	Dilution Factor	PS Recov	Comments
22:26	MP19506-S2	1		
22:30	ZZZZZZ	1		
22:34	ZZZZZZ	1		
22:38	ZZZZZZ	1		
22:42	ZZZZZZ	1		
22:47	ZZZZZZ	1		
22:51	ZZZZZZ	1		
22:55	ZZZZZZ	1		
22:59	ZZZZZZ	1		
23:03	ZZZZZZ	1		
23:07	MA8522-CCV19	1		
23:11	MA8522-CCB19	1		
23:15	ZZZZZZ	1		
23:19	ZZZZZZ	1		
23:24	ZZZZZZ	1		
23:28	ZZZZZZ	1		
23:32	ZZZZZZ	1		
23:36	ZZZZZZ	1		
23:49	F77897-24	10		
23:53	MP19486-D1	10		
23:58	MA8522-CCV20	1		
00:02	MA8522-CCB20	1		
00:06	MP19486-S1	10		
00:10	MP19486-S2	10		
00:15	MP19486-PS1	10		
00:19	MP19486-SD1	50		
00:23	F77897-23	10		
00:28	F77897-32	10		
00:32	F77897-38	10		
00:36	F77897-37	1		
00:41	F77897-38	1		
---------->	Last reportable sample/prep for job F77897			
00:45	MA8522-CRIA2	1		
00:49	MA8522-CCV21	1		

Accutest Laboratories Instrument Runlog
Inorganics Analyses

Login Number: F77897
Account: TETTNOAK - Tetra Tech, Inc
Project: Holloman AFB; Alamogordo, NM

File ID: SA111910M1.ICP Date Analyzed: 11/19/10 Methods: SW846 6010C
Analyst: RS Run ID: MA8522
Parameters: Ba,Cr,Se

	Time	Sample Description	Dilution Factor	PS Recov	Comments
	00:53	MA8522-CCB21	1		
	00:57	MA8522-ICSA2	1		
	01:02	MA8522-ICSAB2	1		
	01:06	MA8522-CCV22	1		
	01:10	MA8522-CCB22	1		
---------->	Last reportable CCB for job F77897				
	Refer to raw data for calibration curve and standards.				

9.11

9

INTERNAL STANDARD SUMMARY

Login Number: F77897
Account: TETTNOAK - Tetra Tech, Inc
Project: Holloman AFB; Alamogordo, NM

File ID: SA111910M1.ICP Date Analyzed: 11/19/10 Methods: SW846 6010C
Analyst: RS Run ID: MA8522
Parameters: Ba,Cr,Se

Time	Sample Description	Istd#1	Istd#2	Istd#3	Istd#4	Istd#5
06:04	MA8522-STD1	2049	1579	29401	10759	1330
06:08	MA8522-STD2	1934	1584	28054	10532	1097
06:12	MA8522-STD3	1875	1626	27710	10519	1028
06:15	MA8522-HSTD1	1866	1607	27701	10574	1029
06:19	MA8522-ICV1	1924	1586	28194	10649	1103
06:27	MA8522-ICB1	2037 R	1588 R	29271 R	10815 R	1329 R
06:31	MA8522-CRIA1	2018	1588	28972	10826	1267
06:39	MA8522-ICSA1	1758	1629	25707	10269	919
06:44	MA8522-ICSAB1	1747	1617	25505	10218	908
06:49	MA8522-CCV1	1935	1600	27906	10517	1104
06:56	MA8522-CCB1	2038	1592	29188	10734	1325
09:12	MA8522-CCV2	1993	1628	28460	10893	1100
09:18	MA8522-CCB2	2059	1583	29008	10852	1300
09:22	ZZZZZZ	1895	1481	27020	10724	1027
09:26	ZZZZZZ	1832	1431	26209	10593	1024
09:30	ZZZZZZ	2358	1854	33572	13050	1127
09:34	ZZZZZZ	2416	1955	34400	13250	1123
09:38	F78117-15	2113	1793	29775	11362	1178
09:42	MP19496-D1	2117	1814	29687	11479	1183
09:46	MP19496-S1	2163	1787	30178	11530	1187
09:50	MP19496-S2	2167	1886	30490	11679	1143
09:54	MP19496-PS1	2137	1817	30297	11518	1184
09:58	MP19496-SD1	2072	1663	29376	11102	1256
10:02	MA8522-CCV3	1950	1610	27836	10844	1090
10:06	MA8522-CCB3	2070	1624	29057	11026	1320
10:10	ZZZZZZ	2113	1759	29873	11447	1211
10:14	ZZZZZZ	2085	1672	29324	11140	1257
10:18	ZZZZZZ	2095	1719	29544	11266	1214
10:22	ZZZZZZ	2132	1731	29560	11245	1239
10:26	ZZZZZZ	2171	1728	30543	11484	1241
10:30	ZZZZZZ	2121	1733	29994	11379	1226
10:34	F78117-21	2101	1678	29812	11296	1267
10:38	MP19497-D1	2079	1670	29472	11206	1255

INTERNAL STANDARD SUMMARY

Login Number: F77897
Account: TETTNOAK - Tetra Tech, Inc
Project: Holloman AFB; Alamogordo, NM

File ID: SA111910M1.ICP Date Analyzed: 11/19/10 Methods: SW846 6010C
Analyst: RS Run ID: MA8522
Parameters: Ba,Cr,Se

Time	Sample Description	Istd#1	Istd#2	Istd#3	Istd#4	Istd#5
10:42	MP19497-S1	2075	1660	29355	11242	1245
10:46	MP19497-S2	2087	1670	29456	11245	1241
10:50	MA8522-CCV4	1985	1620	28125	10906	1101
10:54	MA8522-CCB4	2101	1617	29398	11079	1330
10:58	MP19497-PS1	2113	1678	29795	11264	1266
11:02	MP19497-SD1	2063	1614	29170	11007	1293
11:06	ZZZZZZ	2061	1663	29065	11098	1245
11:10	ZZZZZZ	2061	1690	29480	11176	1241
11:14	ZZZZZZ	2127	1770	29782	11367	1197
11:18	ZZZZZZ	2116	1751	29792	11384	1222
11:22	ZZZZZZ	2117	1741	29900	11286	1264
11:26	F78118-20	2235	2321 !	31154	12572	1100
11:30	MP19501-D1	2353	2029 !	33066	12619	1172
11:34	MP19501-S1	2336	2159 !	32915	12597	1133
11:38	MA8522-CCV5	2043	1657	28848	10861	1124
11:42	MA8522-CCB5	2107	1638	29624	10977	1337
11:46	MP19501-S2	2276	2077 !	32317	12478	1122
11:50	MP19501-PS1	2232	2363 !	32377	12428	1098
11:54	MP19501-SD1	2103	1853	29758	11221	1231
11:58	ZZZZZZ	2200	1849	30879	11587	1252
12:02	ZZZZZZ	2313	2248 !	33095	12555	1176
12:06	ZZZZZZ	2160	2124 !	30978	11797	1185
12:10	ZZZZZZ	2076	2064 !	30686	12065	983
12:14	ZZZZZZ	2342	2400 !	34209	13527 !	1031
12:18	ZZZZZZ	2298	2186 !	33564	13104	1105
12:23	ZZZZZZ	2182	2118 !	31867	12484	1112
12:27	MA8522-CCV6	1947	1608	28103	10994	1105
12:31	MA8522-CCB6	2083	1620	29735	11204	1339
12:35	ZZZZZZ	2268	2110 !	32739	12746	1134
12:39	F78063-1	2022	1600	29324	11218	1270
12:43	MP19503-D1	2024	1592	29006	11220	1291
12:47	MP19486-S1	2048	1598	29224	11157	1260
12:47	MP19503-S1	2048	1598	29224	11157	1260

INTERNAL STANDARD SUMMARY

Login Number: F77897
Account: TETTNOAK - Tetra Tech, Inc
Project: Holloman AFB; Alamogordo, NM

File ID: SA111910M1.ICP Date Analyzed: 11/19/10 Methods: SW846 6010C
Analyst: RS Run ID: MA8522
Parameters: Ba,Cr,Se

Time	Sample Description	Istd#1	Istd#2	Istd#3	Istd#4	Istd#5
12:51	MP19486-S2	2004	1589	28839	10869	1239
12:51	MP19503-S2	2004	1589	28839	10869	1239
12:55	MP19486-SD1	2014	1580	29059	11024	1299
12:55	MP19503-SD1	2014	1580	29059	11024	1299
12:59	MP19505-MB1	2096	1619	29525	11210	1352
13:04	MP19505-B1	2037	1602	28773	11053	1193
13:07	F78137-1	3189 !	2582 !	44790 !	17084 !	1122
13:12	MP19505-D1	3197 !	2574 !	45312 !	17270 !	1104
13:16	MA8522-CCV7	1941	1645	28643	10943	1112
13:20	MA8522-CCB7	2024	1613	29156	11037	1333
13:28	MP19505-SD1	2287	1815	32650	12317	1210
13:32	MP19505-PS1	3065 !	2465 !	43428 !	16726 !	1086
13:36	MP19505-S1	3282 !	2716 !	46851 !	18236 !	1026
13:40	MP19505-S2	3315 !	2774 !	47097 !	18385 !	1034
13:53	ZZZZZZ	1690	1357	25222	11140	683 !
13:57	ZZZZZZ	2281	1839	32782	12553	1165
14:01	ZZZZZZ	2129	1698	30429	11382	1218
14:05	MA8522-CCV8	1970	1648	29101	11065	1132
14:09	MA8522-CCB8	2023	1629	29560	11127	1341
14:13	ZZZZZZ	2091	1678	29846	11403	1216
14:17	ZZZZZZ	1749	1395	25649	11162	688 !
14:21	ZZZZZZ	2166	1713	31163	11644	1206
14:25	ZZZZZZ	2462	1992 !	35723	13716 !	1144
14:30	ZZZZZZ	2098	1673	30357	11554	1200
14:34	ZZZZZZ	1713	1358	25241	11086	681 !
14:38	ZZZZZZ	2489	2029 !	35884	13795 !	1134
14:54	MA8522-CCV9	1974	1657	29032	10978	1130
14:58	MA8522-CCB9	2056	1641	29964	11127	1351
15:06	MP19487-D1	2095	1732	30527	11560	1253
15:43	MA8522-CCV10	1930	1596	28118	10877	1110
15:47	MA8522-CCB10	2038	1608	29478	10966	1333
16:32	MA8522-CCV11	1910	1620	28152	10973	1111
16:36	MA8522-CCB11	2070	1620	29952	11170	1355

INTERNAL STANDARD SUMMARY

Login Number: F77897
Account: TETTNOAK - Tetra Tech, Inc
Project: Holloman AFB; Alamogordo, NM

File ID: SA111910M1.ICP Date Analyzed: 11/19/10 Methods: SW846 6010C
Analyst: RS Run ID: MA8522
Parameters: Ba,Cr,Se

Time	Sample Description	Istd#1	Istd#2	Istd#3	Istd#4	Istd#5
17:20	MA8522-CCV12	1955	1640	28358	10833	1121
17:24	MA8522-CCB12	2082	1647	30089	11054	1348
17:28	MP19514-MB1	2047	1632	29823	11174	1341
17:32	MP19514-B1	1937	1588	28376	11059	1162
17:36	F78020-1	1905	1519	27842	10878	1171
17:40	MP19514-D1	1888	1527	27660	10895	1163
17:45	MP19514-SD1	2002	1602	28604	10958	1269
17:49	MP19514-PS1	1945	1543	28002	10775	1157
17:53	MP19514-S1	1927	1564	28164	10943	1111
17:57	MP19514-S2	1891	1543	27702	10894	1098
18:00	ZZZZZZ	1903	1526	27805	10923	1167
18:05	ZZZZZZ	1952	1580	28415	11033	1225
18:09	MA8522-CCV13	1915	1617	27975	10869	1103
18:13	MA8522-CCB13	2036	1626	29169	11010	1335
18:17	ZZZZZZ	2073	1630	29874	11153	1348
18:21	ZZZZZZ	1968	1550	28425	10937	1201
18:25	ZZZZZZ	1951	1552	28295	11044	1197
18:29	ZZZZZZ	1889	1498	27033	10820	1106
18:33	ZZZZZZ	1960	1551	27947	10955	1173
18:37	ZZZZZZ	1879	1512	27117	10953	1119
18:42	ZZZZZZ	1802	1455	25927	10648	1033
18:46	ZZZZZZ	1776	1394	25150	10405	975
18:50	ZZZZZZ	1805	1424	25622	10294	1016
18:54	ZZZZZZ	1948	1533	28202	10966	1210
18:58	MA8522-CCV14	1918	1606	27979	10855	1099
19:02	MA8522-CCB14	2036	1612	29150	11044	1332
19:06	ZZZZZZ	1833	1445	26185	10676	1063
19:10	ZZZZZZ	1832	1454	26107	10575	1067
19:14	ZZZZZZ	1913	1525	27458	10931	1164
19:19	ZZZZZZ	1765	1393	25679	11246	847
19:23	ZZZZZZ	1897	1497	27434	10879	1148
19:27	ZZZZZZ	1987	1554	28910	11198	1259
19:31	ZZZZZZ	2002	1568	29268	11208	1296

INTERNAL STANDARD SUMMARY

Login Number: F77897
Account: TETTNOAK - Tetra Tech, Inc
Project: Holloman AFB; Alamogordo, NM

File ID: SA111910M1.ICP Date Analyzed: 11/19/10 Methods: SW846 6010C
Analyst: RS Run ID: MA8522
Parameters: Ba,Cr,Se

Time	Sample Description	Istd#1	Istd#2	Istd#3	Istd#4	Istd#5
19:35	MP19514-MB2	2030	1587	29373	11158	1323
19:40	MP19510-MB1	2014	1590	29103	11058	1316
19:44	MP19510-B1	1955	1592	28161	11190	1161
19:48	MA8522-CCV15	1928	1605	27912	10859	1098
19:52	MA8522-CCB15	2039	1614	29092	10980	1320
20:22	ZZZZZZ	1702	1332	23768	10077	919
20:26	ZZZZZZ	2030	1608	29486	11183	1333
20:30	ZZZZZZ	2026	1597	29344	11100	1325
20:34	ZZZZZZ	1773	1405	25144	10334	998
20:38	MA8522-CCV16	1930	1607	28038	10805	1100
20:42	MA8522-CCB16	2041	1620	29171	10935	1324
20:46	ZZZZZZ	1716	1345	24126	10161	935
20:50	ZZZZZZ	1936	1520	27547	10855	1161
20:55	ZZZZZZ	1800	1470	26368	10606	1042
20:59	ZZZZZZ	1834	1532	26624	10629	1071
21:03	ZZZZZZ	1881	1491	27287	10696	1120
21:07	ZZZZZZ	1851	1474	26637	10632	1086
21:11	ZZZZZZ	1921	1506	27617	10750	1172
21:15	ZZZZZZ	1920	1521	27337	10729	1157
21:19	ZZZZZZ	1898	1479	27143	10637	1101
21:23	ZZZZZZ	1958	1535	28258	10885	1188
21:28	MA8522-CCV17	1942	1596	28182	10787	1103
21:31	MA8522-CCB17	2051	1622	29426	10977	1333
21:36	ZZZZZZ	1917	1485	27129	10635	1162
21:49	MP19506-MB1	2045	1596	29159	10901	1324
21:53	MP19506-B1	1973	1578	28006	10742	1168
21:57	F77958-1	2424	2378 !	35052	13750 !	991
22:01	MP19506-D1	2451	2419 !	35469	13832 !	998
22:05	MP19506-SD1	2127	1848	30871	11769	1175
22:09	MP19506-PS1	2384	2332 !	34663	13630 !	981
22:13	MP19506-S1	2558 !	2570 !	37499 !	14726 !	915
22:17	MA8522-CCV18	1926	1624	28084	10761	1105
22:21	MA8522-CCB18	2033	1611	29437	10970	1335

INTERNAL STANDARD SUMMARY

Login Number: F77897
Account: TETTNOAK - Tetra Tech, Inc
Project: Holloman AFB; Alamogordo, NM

File ID: SA111910M1.ICP Date Analyzed: 11/19/10 Methods: SW846 6010C
Analyst: RS Run ID: MA8522
Parameters: Ba,Cr,Se

Time	Sample Description	Istd#1	Istd#2	Istd#3	Istd#4	Istd#5
22:26	MP19506-S2	2379	2383 !	34654	13597 !	944
22:30	ZZZZZZ	2525	2425 !	36541	14056 !	1059
22:34	ZZZZZZ	2103	1777	30465	11921	980
22:38	ZZZZZZ	2234	1984	33105	13003	928
22:42	ZZZZZZ	2089	1734	30245	11665	1057
22:47	ZZZZZZ	2219	2097 !	32443	12613	1029
22:51	ZZZZZZ	2297	2294 !	33655	12899	1055
22:55	ZZZZZZ	2356	2280 !	34311	13304	1016
22:59	ZZZZZZ	2246	2226 !	32953	12740	1051
23:03	ZZZZZZ	2216	2130 !	32325	12430	1085
23:07	MA8522-CCV19	1929	1625	28474	10853	1110
23:11	MA8522-CCB19	2041	1605	29272	11027	1337
23:15	ZZZZZZ	2183	1959	31896	12838	882
23:19	ZZZZZZ	2496	2314 !	36522	14458 !	932
23:24	ZZZZZZ	2046	1759	29751	11828	928
23:28	ZZZZZZ	2025	1688	29250	11540	978
23:32	ZZZZZZ	2274	1973	33452	13279	944
23:36	ZZZZZZ	2732 !	2634 !	40312 !	15943 !	984
23:49	F77897-24	1856	1509	27314	10654	1079
23:53	MP19486-D1	1814	1470	26709	10656	1057
23:58	MA8522-CCV20	1886	1559	27648	10751	1088
00:02	MA8522-CCB20	2001	1602	28934	10927	1316
00:06	MP19486-S1	1801	1458	26563	10612	1034
00:10	MP19486-S2	1812	1469	26629	10679	1046
00:15	MP19486-PS1	1810	1469	26847	10674	1060
00:19	MP19486-SD1	1907	1514	27949	10802	1192
00:23	F77897-23	1797	1425	26546	10696	1059
00:28	F77897-32	1783	1438	26382	10673	1042
00:32	F77897-38	1744	1403	25932	10590	1022
00:36	F77897-37	1421	1172	21676	9494	686 !
00:41	F77897-38	1465	1237	22481	9820	678 !
00:45	MA8522-CRIA2	1945	1572	28623	11044	1248
00:49	MA8522-CCV21	1838	1506	27186	10722	1076

INTERNAL STANDARD SUMMARY

Login Number: F77897
Account: TETTNOAK - Tetra Tech, Inc
Project: Holloman AFB; Alamogordo, NM

File ID: SA111910M1.ICP Date Analyzed: 11/19/10 Methods: SW846 6010C
Analyst: RS Run ID: MA8522
Parameters: Ba,Cr,Se

Time	Sample Description	Istd#1	Istd#2	Istd#3	Istd#4	Istd#5
00:53	MA8522-CCB21	1960	1556	28873	11007	1305
00:57	MA8522-ICSA2	1716	1583	25401	10465	916
01:02	MA8522-ICSAB2	1693	1579	25233	10406	900
01:06	MA8522-CCV22	1856	1567	27845	10823	1084
01:10	MA8522-CCB22	1966	1559	29045	11027	1303

R = Reference for ISTD limits. ! = Outside limits.

LEGEND:

Istd#	Parameter	Limits
Istd#1	Yttrium (2243)	60-125 %
Istd#2	Yttrium (2422)	60-125 %
Istd#3	Yttrium (3242)	60-125 %
Istd#4	Yttrium (3710)	60-125 %
Istd#5	Indium	60-125 %

BLANK RESULTS SUMMARY
Part 1 - Initial and Continuing Calibration Blanks

Login Number: F77897
Account: TETTNOAK - Tetra Tech, Inc
Project: Holloman AFB; Alamogordo, NM

File ID: SA111910M1.ICP Date Analyzed: 11/19/10 Methods: SW846 6010C
QC Limits: result < RL Run ID: MA8522 Units: ug/l

Time:			06:27		06:56		09:18		10:06	
Sample ID:			ICB1		CCB1		CCB2		CCB3	
Metal	RL	IDL	raw	final	raw	final	raw	final	raw	final
Aluminum	200	20	anr							
Antimony	6.0	1	anr							
Arsenic	10	1	anr							
Barium	200	1	0.0	<200	1.1	<200	0.0	<200	0.60	<200
Beryllium	4.0	.1	anr							
Cadmium	5.0	.1	anr							
Calcium	1000	50	anr							
Chromium	10	1	0.10	<10	0.10	<10	-0.10	<10	0.10	<10
Cobalt	50	1	anr							
Copper	25	1	anr							
Iron	300	34	anr							
Lead	5.0	1	anr							
Magnesium	5000	50	anr							
Manganese	15	1	anr							
Molybdenum	50	1								
Nickel	40	1	anr							
Potassium	10000	50	anr							
Selenium	10	2	0.0	<10	1.7	<10	-0.10	<10	0.90	<10
Silver	10	1	anr							
Sodium	10000	750	anr							
Strontium	10	1								
Thallium	10	1	anr							
Tin	50	1	anr							
Titanium	10	1.1								
Vanadium	50	1	anr							
Zinc	20	1	anr							

(*) Outside of QC limits
(anr) Analyte not requested

BLANK RESULTS SUMMARY
Part 1 - Initial and Continuing Calibration Blanks

Login Number: F77897
Account: TETTNOAK - Tetra Tech, Inc
Project: Holloman AFB; Alamogordo, NM

File ID: SA111910M1.ICP Date Analyzed: 11/19/10 Methods: SW846 6010C
QC Limits: result < RL Run ID: MA8522 Units: ug/l

Time:			10:54		11:42		12:31		13:20	
Sample ID:			CCB4		CCB5		CCB6		CCB7	
Metal	RL	IDL	raw	final	raw	final	raw	final	raw	final
Aluminum	200	20	anr							
Antimony	6.0	1	anr							
Arsenic	10	1	anr							
Barium	200	1	-0.80	<200	-0.10	<200	-0.60	<200	0.40	<200
Beryllium	4.0	.1	anr							
Cadmium	5.0	.1	anr							
Calcium	1000	50	anr							
Chromium	10	1	0.10	<10	0.10	<10	0.30	<10	0.20	<10
Cobalt	50	1	anr							
Copper	25	1	anr							
Iron	300	34	anr							
Lead	5.0	1	anr							
Magnesium	5000	50	anr							
Manganese	15	1	anr							
Molybdenum	50	1								
Nickel	40	1	anr							
Potassium	10000	50	anr							
Selenium	10	2	1.4	<10	0.50	<10	0.90	<10	0.80	<10
Silver	10	1	anr							
Sodium	10000	750	anr							
Strontium	10	1								
Thallium	10	1	anr							
Tin	50	1	anr							
Titanium	10	1.1								
Vanadium	50	1	anr							
Zinc	20	1	anr							

(*) Outside of QC limits
(anr) Analyte not requested

BLANK RESULTS SUMMARY
Part 1 - Initial and Continuing Calibration Blanks

Login Number: F77897
Account: TETTNOAK - Tetra Tech, Inc
Project: Holloman AFB; Alamogordo, NM

File ID: SA111910M1.ICP Date Analyzed: 11/19/10 Methods: SW846 6010C
QC Limits: result < RL Run ID: MA8522 Units: ug/l

Time:			14:09		14:58		15:47		16:36	
Sample ID:			CCB8		CCB9		CCB10		CCB11	
Metal	RL	IDL	raw	final	raw	final	raw	final	raw	final
Aluminum	200	20	anr							
Antimony	6.0	1	anr							
Arsenic	10	1	anr							
Barium	200	1	0.10	<200	-1.1	<200	0.10	<200	-1.1	<200
Beryllium	4.0	.1	anr							
Cadmium	5.0	.1	anr							
Calcium	1000	50	anr							
Chromium	10	1	0.10	<10	0.10	<10	0.20	<10	0.60	<10
Cobalt	50	1	anr							
Copper	25	1	anr							
Iron	300	34	anr							
Lead	5.0	1	anr							
Magnesium	5000	50	anr							
Manganese	15	1	anr							
Molybdenum	50	1								
Nickel	40	1	anr							
Potassium	10000	50	anr							
Selenium	10	2	0.80	<10	0.90	<10	1.3	<10	-0.60	<10
Silver	10	1	anr							
Sodium	10000	750	anr							
Strontium	10	1								
Thallium	10	1	anr							
Tin	50	1	anr							
Titanium	10	1.1								
Vanadium	50	1	anr							
Zinc	20	1	anr							

(*) Outside of QC limits
(anr) Analyte not requested

BLANK RESULTS SUMMARY
Part 1 - Initial and Continuing Calibration Blanks

Login Number: F77897
Account: TETTNOAK - Tetra Tech, Inc
Project: Holloman AFB; Alamogordo, NM

File ID: SA111910M1.ICP Date Analyzed: 11/19/10 Methods: SW846 6010C
QC Limits: result < RL Run ID: MA8522 Units: ug/l

Time:			17:24		18:13		19:02		19:52	
Sample ID:			CCB12		CCB13		CCB14		CCB15	
Metal	RL	IDL	raw	final	raw	final	raw	final	raw	final
Aluminum	200	20	anr							
Antimony	6.0	1	anr							
Arsenic	10	1	anr							
Barium	200	1	-0.70	<200	0.90	<200	0.60	<200	0.0	<200
Beryllium	4.0	.1	anr							
Cadmium	5.0	.1	anr							
Calcium	1000	50	anr							
Chromium	10	1	0.30	<10	-0.10	<10	0.0	<10	0.20	<10
Cobalt	50	1	anr							
Copper	25	1	anr							
Iron	300	34	anr							
Lead	5.0	1	anr							
Magnesium	5000	50	anr							
Manganese	15	1	anr							
Molybdenum	50	1								
Nickel	40	1	anr							
Potassium	10000	50	anr							
Selenium	10	2	2.6	<10	1.6	<10	0.70	<10	2.5	<10
Silver	10	1	anr							
Sodium	10000	750	anr							
Strontium	10	1								
Thallium	10	1	anr							
Tin	50	1	anr							
Titanium	10	1.1								
Vanadium	50	1	anr							
Zinc	20	1	anr							

(*) Outside of QC limits
(anr) Analyte not requested

BLANK RESULTS SUMMARY
Part 1 - Initial and Continuing Calibration Blanks

Login Number: F77897
Account: TETTNOAK - Tetra Tech, Inc
Project: Holloman AFB; Alamogordo, NM

File ID: SA111910M1.ICP Date Analyzed: 11/19/10 Methods: SW846 6010C
QC Limits: result < RL Run ID: MA8522 Units: ug/l

Time:			20:42		21:31		22:21		23:11	
Sample ID:			CCB16		CCB17		CCB18		CCB19	
Metal	RL	IDL	raw	final	raw	final	raw	final	raw	final
Aluminum	200	20	anr							
Antimony	6.0	1	anr							
Arsenic	10	1	anr							
Barium	200	1	-0.60	<200	-1.3	<200	-2.3	<200	-2.6	<200
Beryllium	4.0	.1	anr							
Cadmium	5.0	.1	anr							
Calcium	1000	50	anr							
Chromium	10	1	0.20	<10	0.20	<10	0.0	<10	0.40	<10
Cobalt	50	1	anr							
Copper	25	1	anr							
Iron	300	34	anr							
Lead	5.0	1	anr							
Magnesium	5000	50	anr							
Manganese	15	1	anr							
Molybdenum	50	1								
Nickel	40	1	anr							
Potassium	10000	50	anr							
Selenium	10	2	2.0	<10	0.60	<10	2.1	<10	2.1	<10
Silver	10	1	anr							
Sodium	10000	750	anr							
Strontium	10	1								
Thallium	10	1	anr							
Tin	50	1	anr							
Titanium	10	1.1								
Vanadium	50	1	anr							
Zinc	20	1	anr							

(*) Outside of QC limits
(anr) Analyte not requested

BLANK RESULTS SUMMARY
Part 1 - Initial and Continuing Calibration Blanks

Login Number: F77897
Account: TETTNOAK - Tetra Tech, Inc
Project: Holloman AFB; Alamogordo, NM

File ID: SA111910M1.ICP Date Analyzed: 11/19/10 Methods: SW846 6010C
QC Limits: result < RL Run ID: MA8522 Units: ug/l

Time:			00:02		00:53		01:10	
Sample ID:			CCB20		CCB21		CCB22	
Metal	RL	IDL	raw	final	raw	final	raw	final
Aluminum	200	20	anr					
Antimony	6.0	1	anr					
Arsenic	10	1	anr					
Barium	200	1	-1.9	<200	-2.8	<200	-3.7	<200
Beryllium	4.0	.1	anr					
Cadmium	5.0	.1	anr					
Calcium	1000	50	anr					
Chromium	10	1	0.10	<10	0.0	<10	0.30	<10
Cobalt	50	1	anr					
Copper	25	1	anr					
Iron	300	34	anr					
Lead	5.0	1	anr					
Magnesium	5000	50	anr					
Manganese	15	1	anr					
Molybdenum	50	1						
Nickel	40	1	anr					
Potassium	10000	50	anr					
Selenium	10	2	1.4	<10	1.0	<10	2.7	<10
Silver	10	1	anr					
Sodium	10000	750	anr					
Strontium	10	1						
Thallium	10	1	anr					
Tin	50	1	anr					
Titanium	10	1.1						
Vanadium	50	1	anr					
Zinc	20	1	anr					

(*) Outside of QC limits
(anr) Analyte not requested

CALIBRATION CHECK STANDARDS SUMMARY
Initial and Continuing Calibration Checks

Login Number: F77897
Account: TETTNOAK - Tetra Tech, Inc
Project: Holloman AFB; Alamogordo, NM

File ID: SA111910M1.ICP Date Analyzed: 11/19/10 Methods: SW846 6010C
QC Limits: 90 to 110 % Recovery Run ID: MA8522 Units: ug/l

Time:		06:19			06:49			09:12	
Sample ID:	ICV	ICV1		CCV	CCV1		CCV	CCV2	
Metal	True	Results	% Rec	True	Results	% Rec	True	Results	% Rec
Aluminum	anr								
Antimony	anr								
Arsenic	anr								
Barium	2000	2050	102.5	2000	2080	104.0	2000	2090	104.5
Beryllium	anr								
Cadmium	anr								
Calcium	anr								
Chromium	2000	2080	104.0	2000	2070	103.5	2000	2040	102.0
Cobalt	anr								
Copper	anr								
Iron	anr								
Lead	anr								
Magnesium	anr								
Manganese	anr								
Molybdenum									
Nickel	anr								
Potassium	anr								
Selenium	2000	2040	102.0	2000	2000	100.0	2000	1940	97.0
Silver	anr								
Sodium	anr								
Strontium									
Thallium	anr								
Tin	anr								
Titanium									
Vanadium	anr								
Zinc	anr								

(*) Outside of QC limits
(anr) Analyte not requested

CALIBRATION CHECK STANDARDS SUMMARY
Initial and Continuing Calibration Checks

Login Number: F77897
Account: TETTNOAK - Tetra Tech, Inc
Project: Holloman AFB; Alamogordo, NM

File ID: SA111910M1.ICP Date Analyzed: 11/19/10 Methods: SW846 6010C
QC Limits: 90 to 110 % Recovery Run ID: MA8522 Units: ug/l

Time:		10:02			10:50			11:38	
Sample ID:	CCV	CCV3		CCV	CCV4		CCV	CCV5	
Metal	True	Results	% Rec	True	Results	% Rec	True	Results	% Rec
Aluminum	anr								
Antimony	anr								
Arsenic	anr								
Barium	2000	2060	103.0	2000	2060	103.0	2000	2030	101.5
Beryllium	anr								
Cadmium	anr								
Calcium	anr								
Chromium	2000	2000	100.0	2000	1990	99.5	2000	1990	99.5
Cobalt	anr								
Copper	anr								
Iron	anr								
Lead	anr								
Magnesium	anr								
Manganese	anr								
Molybdenum									
Nickel	anr								
Potassium	anr								
Selenium	2000	1970	98.5	2000	1920	96.0	2000	1890	94.5
Silver	anr								
Sodium	anr								
Strontium									
Thallium	anr								
Tin	anr								
Titanium									
Vanadium	anr								
Zinc	anr								

(*) Outside of QC limits
(anr) Analyte not requested

CALIBRATION CHECK STANDARDS SUMMARY
Initial and Continuing Calibration Checks

Login Number: F77897
Account: TETTNOAK - Tetra Tech, Inc
Project: Holloman AFB; Alamogordo, NM

File ID: SA111910M1.ICP Date Analyzed: 11/19/10 Methods: SW846 6010C
QC Limits: 90 to 110 % Recovery Run ID: MA8522 Units: ug/l

Time:		12:27			13:16			14:05	
Sample ID:	CCV	CCV6		CCV	CCV7		CCV	CCV8	
Metal	True	Results	% Rec	True	Results	% Rec	True	Results	% Rec
Aluminum	anr								
Antimony	anr								
Arsenic	anr								
Barium	2000	2070	103.5	2000	2040	102.0	2000	2030	101.5
Beryllium	anr								
Cadmium	anr								
Calcium	anr								
Chromium	2000	2020	101.0	2000	2020	101.0	2000	2030	101.5
Cobalt	anr								
Copper	anr								
Iron	anr								
Lead	anr								
Magnesium	anr								
Manganese	anr								
Molybdenum									
Nickel	anr								
Potassium	anr								
Selenium	2000	1970	98.5	2000	2000	100.0	2000	1980	99.0
Silver	anr								
Sodium	anr								
Strontium									
Thallium	anr								
Tin	anr								
Titanium									
Vanadium	anr								
Zinc	anr								

(*) Outside of QC limits
(anr) Analyte not requested

CALIBRATION CHECK STANDARDS SUMMARY
Initial and Continuing Calibration Checks

Login Number: F77897
Account: TETTNOAK - Tetra Tech, Inc
Project: Holloman AFB; Alamogordo, NM

File ID: SA111910M1.ICP Date Analyzed: 11/19/10 Methods: SW846 6010C
QC Limits: 90 to 110 % Recovery Run ID: MA8522 Units: ug/l

Time:		14:54			15:43			16:32	
Sample ID:	CCV	CCV9		CCV	CCV10		CCV	CCV11	
Metal	True	Results	% Rec	True	Results	% Rec	True	Results	% Rec
Aluminum	anr								
Antimony	anr								
Arsenic	anr								
Barium	2000	2020	101.0	2000	2050	102.5	2000	2010	100.5
Beryllium	anr								
Cadmium	anr								
Calcium	anr								
Chromium	2000	2030	101.5	2000	2030	101.5	2000	2020	101.0
Cobalt	anr								
Copper	anr								
Iron	anr								
Lead	anr								
Magnesium	anr								
Manganese	anr								
Molybdenum									
Nickel	anr								
Potassium	anr								
Selenium	2000	1970	98.5	2000	1990	99.5	2000	2010	100.5
Silver	anr								
Sodium	anr								
Strontium									
Thallium	anr								
Tin	anr								
Titanium									
Vanadium	anr								
Zinc	anr								

(*) Outside of QC limits
(anr) Analyte not requested

CALIBRATION CHECK STANDARDS SUMMARY
Initial and Continuing Calibration Checks

Login Number: F77897
Account: TETTNOAK - Tetra Tech, Inc
Project: Holloman AFB; Alamogordo, NM

File ID: SA111910M1.ICP Date Analyzed: 11/19/10 Methods: SW846 6010C
QC Limits: 90 to 110 % Recovery Run ID: MA8522 Units: ug/l

Time:		17:20			18:09			18:58	
Sample ID:	CCV	CCV12		CCV	CCV13		CCV	CCV14	
Metal	True	Results	% Rec	True	Results	% Rec	True	Results	% Rec
Aluminum	anr								
Antimony	anr								
Arsenic	anr								
Barium	2000	2040	102.0	2000	2060	103.0	2000	2070	103.5
Beryllium	anr								
Cadmium	anr								
Calcium	anr								
Chromium	2000	2000	100.0	2000	2000	100.0	2000	2020	101.0
Cobalt	anr								
Copper	anr								
Iron	anr								
Lead	anr								
Magnesium	anr								
Manganese	anr								
Molybdenum									
Nickel	anr								
Potassium	anr								
Selenium	2000	1960	98.0	2000	2010	100.5	2000	2010	100.5
Silver	anr								
Sodium	anr								
Strontium									
Thallium	anr								
Tin	anr								
Titanium									
Vanadium	anr								
Zinc	anr								

(*) Outside of QC limits
(anr) Analyte not requested

CALIBRATION CHECK STANDARDS SUMMARY
Initial and Continuing Calibration Checks

Login Number: F77897
Account: TETTNOAK - Tetra Tech, Inc
Project: Holloman AFB; Alamogordo, NM

File ID: SA111910M1.ICP Date Analyzed: 11/19/10 Methods: SW846 6010C
QC Limits: 90 to 110 % Recovery Run ID: MA8522 Units: ug/l

Time:		19:48			20:38			21:28	
Sample ID:	CCV	CCV15		CCV	CCV16		CCV	CCV17	
Metal	True	Results	% Rec	True	Results	% Rec	True	Results	% Rec
Aluminum	anr								
Antimony	anr								
Arsenic	anr								
Barium	2000	2080	104.0	2000	2110	105.5	2000	2100	105.0
Beryllium	anr								
Cadmium	anr								
Calcium	anr								
Chromium	2000	2010	100.5	2000	2000	100.0	2000	2010	100.5
Cobalt	anr								
Copper	anr								
Iron	anr								
Lead	anr								
Magnesium	anr								
Manganese	anr								
Molybdenum									
Nickel	anr								
Potassium	anr								
Selenium	2000	1980	99.0	2000	1990	99.5	2000	1960	98.0
Silver	anr								
Sodium	anr								
Strontium									
Thallium	anr								
Tin	anr								
Titanium									
Vanadium	anr								
Zinc	anr								

(*) Outside of QC limits
(anr) Analyte not requested

CALIBRATION CHECK STANDARDS SUMMARY
Initial and Continuing Calibration Checks

Login Number: F77897
Account: TETTNOAK - Tetra Tech, Inc
Project: Holloman AFB; Alamogordo, NM

File ID: SA111910M1.ICP Date Analyzed: 11/19/10 Methods: SW846 6010C
QC Limits: 90 to 110 % Recovery Run ID: MA8522 Units: ug/l

Time:		22:17			23:07			23:58	
Sample ID:	CCV	CCV18		CCV	CCV19		CCV	CCV20	
Metal	True	Results	% Rec	True	Results	% Rec	True	Results	% Rec
Aluminum	anr								
Antimony	anr								
Arsenic	anr								
Barium	2000	2120	106.0	2000	2100	105.0	2000	2120	106.0
Beryllium	anr								
Cadmium	anr								
Calcium	anr								
Chromium	2000	1990	99.5	2000	1990	99.5	2000	2000	100.0
Cobalt	anr								
Copper	anr								
Iron	anr								
Lead	anr								
Magnesium	anr								
Manganese	anr								
Molybdenum									
Nickel	anr								
Potassium	anr								
Selenium	2000	1990	99.5	2000	1990	99.5	2000	2000	100.0
Silver	anr								
Sodium	anr								
Strontium									
Thallium	anr								
Tin	anr								
Titanium									
Vanadium	anr								
Zinc	anr								

(*) Outside of QC limits
(anr) Analyte not requested

CALIBRATION CHECK STANDARDS SUMMARY
Initial and Continuing Calibration Checks

Login Number: F77897
Account: TETTNOAK - Tetra Tech, Inc
Project: Holloman AFB; Alamogordo, NM

File ID: SA111910M1.ICP Date Analyzed: 11/19/10 Methods: SW846 6010C
QC Limits: 90 to 110 % Recovery Run ID: MA8522 Units: ug/l

Time:		00:49			01:06	
Sample ID:	CCV	CCV21		CCV	CCV22	
Metal	True	Results	% Rec	True	Results	% Rec
Aluminum	anr					
Antimony	anr					
Arsenic	anr					
Barium	2000	2150	107.5	2000	2090	104.5
Beryllium	anr					
Cadmium	anr					
Calcium	anr					
Chromium	2000	2020	101.0	2000	1950	97.5
Cobalt	anr					
Copper	anr					
Iron	anr					
Lead	anr					
Magnesium	anr					
Manganese	anr					
Molybdenum						
Nickel	anr					
Potassium	anr					
Selenium	2000	2010	100.5	2000	1990	99.5
Silver	anr					
Sodium	anr					
Strontium						
Thallium	anr					
Tin	anr					
Titanium						
Vanadium	anr					
Zinc	anr					

(*) Outside of QC limits
(anr) Analyte not requested

HIGH STANDARD CHECK SUMMARY

Login Number: F77897
Account: TETTNOAK - Tetra Tech, Inc
Project: Holloman AFB; Alamogordo, NM

File ID: SA111910M1.ICP Date Analyzed: 11/19/10 Methods: SW846 6010C
QC Limits: 95 to 105 % Recovery Run ID: MA8522 Units: ug/l

Time:		06:15	
Sample ID:	HSTD	HSTD1	
Metal	True	Results	% Rec
Aluminum	anr		
Antimony	anr		
Arsenic	anr		
Barium	4000	3930	98.3
Beryllium	anr		
Cadmium	anr		
Calcium	anr		
Chromium	4000	3910	97.8
Cobalt	anr		
Copper	anr		
Iron	anr		
Lead	anr		
Magnesium	anr		
Manganese	anr		
Molybdenum			
Nickel	anr		
Potassium	anr		
Selenium	4000	4010	100.3
Silver	anr		
Sodium	anr		
Strontium			
Thallium	anr		
Tin	anr		
Titanium			
Vanadium	anr		
Zinc	anr		

(*) Outside of QC limits
(anr) Analyte not requested

LOW CALIBRATION CHECK STANDARDS SUMMARY

Login Number: F77897
Account: TETTNOAK - Tetra Tech, Inc
Project: Holloman AFB; Alamogordo, NM

File ID: SA111910M1.ICP Date Analyzed: 11/19/10 Methods: SW846 6010C
QC Limits: CRI 70-130% CRIA 70-130% Run ID: MA8522 Units: ug/l

Time:			06:31		00:45	
Sample ID:	CRI	CRIA	CRIA1		CRIA2	
Metal	True	True	Results	% Rec	Results	% Rec
Aluminum	400	200	anr			
Antimony	10	5.0	anr			
Arsenic	20	10	anr			
Barium	400	200	205	102.5	207	103.5
Beryllium	10	5.0	anr			
Cadmium	10	5.0	anr			
Calcium	2000	1000	anr			
Chromium	20	10	11.0	110.0	10.4	104.0
Cobalt	100	50	anr			
Copper	50	25	anr			
Iron	600	300	anr			
Lead	10	5.0	anr			
Magnesium	10000	5000	anr			
Manganese	30	15	anr			
Molybdenum	100	50				
Nickel	80	40	anr			
Potassium	20000	10000	anr			
Selenium	20	10	11.1	111.0	9.7	97.0
Silver	20	10	anr			
Sodium	20000	10000	anr			
Strontium	20	10				
Thallium	20	10	anr			
Tin	100	50	anr			
Titanium	20	10				
Vanadium	100	50	anr			
Zinc	40	20	anr			

(*) Outside of QC limits
(anr) Analyte not requested

INTERFERING ELEMENT CHECK STANDARDS SUMMARY
Part 1 - ICSA and ICSAB Standards

Login Number: F77897
Account: TETTNOAK - Tetra Tech, Inc
Project: Holloman AFB; Alamogordo, NM

File ID: SA111910M1.ICP Date Analyzed: 11/19/10 Methods: SW846 6010C
QC Limits: 80 to 120 % Recovery Run ID: MA8522 Units: ug/l

Time:			06:39		06:44		00:57		01:02	
Sample ID:	ICSA	ICSAB	ICSA1		ICSAB1		ICSA2		ICSAB2	
Metal	True	True	Results	% Rec	Results	% Rec	Results	% Rec	Results	% Rec
Aluminum	500000	500000	488000	97.6	493000	98.6	456000	91.2	460000	92.0
Antimony		1000	-0.10		988	98.8	-0.60		990	99.0
Arsenic		1000	0.10		1020	102.0	-2.1		988	98.8
Barium		500	1.2		516	103.2	-2.2		514	102.8
Beryllium		500	-0.10		483	96.6	-0.10		453	90.6
Cadmium		1000	0.80		927	92.7	4.1		870	87.0
Calcium	500000	500000	453000	90.6	451000	90.2	395000	79.0*(a)	399000	80.0
Chromium		500	-0.20		419	83.8	-0.50		391	78.2*(a)
Cobalt		500	0.40		486	97.2	0.60		441	88.2
Copper		500	0.60		502	100.4	0.70		524	104.8
Iron	200000	200000	184000	92.0	182000	91.0	166000	83.0	165000	82.5
Lead		1000	-0.80		971	97.1	2.8		899	89.9
Magnesium	500000	500000	509000	101.8	511000	102.2	459000	91.8	466000	93.2
Manganese		500	0.40		430	86.0	0.30		403	80.6
Molybdenum		1000	0.40		955	95.5	0.10		906	90.6
Nickel		1000	0.0		967	96.7	-0.30		901	90.1
Potassium			-5.7		-15		93.9		113	
Selenium		1000	-1.6		982	98.2	-1.8		969	96.9
Silver		1000	0.40		1090	109.0	0.50		1070	107.0
Sodium			639		-580		442		-880	
Strontium		1000	-5.6		-5.5	0.0*	-4.2		-4.2	0.0*
Thallium		1000	-0.30		919	91.9	-4.2		875	87.5
Tin		1000	4.2		910	91.0	4.1		859	85.9
Titanium		1000	1.8		1.7	0.2*	2.1		2.4	0.2*
Vanadium		500	0.70		433	86.6	0.30		422	84.4
Zinc		1000	-5.0		879	87.9	-3.6		796	80.0

(*) Outside of QC limits
(anr) Analyte not requested
(a) Low recovery due to instrument drift.

BLANK RESULTS SUMMARY
Part 2 - Method Blanks

Login Number: F77897
Account: TETTNOAK - Tetra Tech, Inc
Project: Holloman AFB; Alamogordo, NM

QC Batch ID: MP19449
Matrix Type: AQUEOUS

Methods: SW846 7470A
Units: ug/l

Prep Date: 11/10/10

Metal	RL	IDL	MDL	MB raw	final
Mercury	1.0	.071	.05	-0.016	<1.0

Associated samples MP19449: F77897-39

Results < IDL are shown as zero for calculation purposes
(*) Outside of QC limits
(anr) Analyte not requested

9.12.1

9

MATRIX SPIKE AND DUPLICATE RESULTS SUMMARY

Login Number: F77897
Account: TETTNOAK - Tetra Tech, Inc
Project: Holloman AFB; Alamogordo, NM

QC Batch ID: MP19449
Matrix Type: AQUEOUS

Methods: SW846 7470A
Units: ug/l

Prep Date: 11/10/10 11/10/10

Metal	F77900-1 Original	DUP	RPD	QC Limits	F77900-1 Original	MS	Spikelot HGFLWS1	% Rec	QC Limits
Mercury	0.0	0.0	NC	0-20	0.0	2.9	3	96.7	80-120

Associated samples MP19449: F77897-39

Results < IDL are shown as zero for calculation purposes
(*) Outside of QC limits
(N) Matrix Spike Rec. outside of QC limits
(anr) Analyte not requested

MATRIX SPIKE AND DUPLICATE RESULTS SUMMARY

Login Number: F77897
Account: TETTNOAK - Tetra Tech, Inc
Project: Holloman AFB; Alamogordo, NM

QC Batch ID: MP19449
Matrix Type: AQUEOUS

Methods: SW846 7470A
Units: ug/l

Prep Date: 11/10/10

Metal	F77900-1 Original	MSD	Spikelot HGFLWS1	% Rec	MSD RPD	QC Limit
Mercury	0.0	2.8	3	93.3	3.5	20

Associated samples MP19449: F77897-39

Results < IDL are shown as zero for calculation purposes
(*) Outside of QC limits
(N) Matrix Spike Rec. outside of QC limits
(anr) Analyte not requested

SPIKE BLANK AND LAB CONTROL SAMPLE SUMMARY

Login Number: F77897
Account: TETTNOAK - Tetra Tech, Inc
Project: Holloman AFB; Alamogordo, NM

QC Batch ID: MP19449
Matrix Type: AQUEOUS

Methods: SW846 7470A
Units: ug/l

Prep Date: 11/10/10

Metal	BSP Result	Spikelot HGFLWS1	% Rec	QC Limits
Mercury	3.0	3	100.0	80-120

Associated samples MP19449: F77897-39

Results < IDL are shown as zero for calculation purposes
(*) Outside of QC limits
(anr) Analyte not requested

SERIAL DILUTION RESULTS SUMMARY

Login Number: F77897
Account: TETTNOAK - Tetra Tech, Inc
Project: Holloman AFB; Alamogordo, NM

QC Batch ID: MP19449
Matrix Type: AQUEOUS

Methods: SW846 7470A
Units: ug/l

Prep Date: 11/10/10

Metal	F77900-1 Original	SDL 1:5	%DIF	QC Limits
Mercury	0.00	0.00	NC	0-10

Associated samples MP19449: F77897-39

Results < IDL are shown as zero for calculation purposes
(*) Outside of QC limits
(anr) Analyte not requested

BLANK RESULTS SUMMARY
Part 2 - Method Blanks

Login Number: F77897
Account: TETTNOAK - Tetra Tech, Inc
Project: Holloman AFB; Alamogordo, NM

QC Batch ID: MP19459
Matrix Type: SOLID

Methods: SW846 7471B
Units: mg/kg

Prep Date: 11/11/10

Metal	RL	IDL	MDL	MB raw	final
Mercury	0.083	.0059	.0083	-0.0030	<0.083

Associated samples MP19459: F77897-1, F77897-2, F77897-3, F77897-4, F77897-5, F77897-6, F77897-7, F77897-8, F77897-9, F77897-10, F77897-11, F77897-12, F77897-13, F77897-14, F77897-15, F77897-16, F77897-17, F77897-18, F77897-19, F77897-20

Results < IDL are shown as zero for calculation purposes
(*) Outside of QC limits
(anr) Analyte not requested

MATRIX SPIKE AND DUPLICATE RESULTS SUMMARY

Login Number: F77897
Account: TETTNOAK - Tetra Tech, Inc
Project: Holloman AFB; Alamogordo, NM

QC Batch ID: MP19459
Matrix Type: SOLID

Methods: SW846 7471B
Units: mg/kg

Prep Date:			11/11/10					11/11/10	
Metal	F77897-1 Original	DUP	RPD	QC Limits	F77897-1 Original	MS	Spikelot HGFLWS1	% Rec	QC Limits
Mercury	0.0	0.0	NC	0-20	0.0	0.23	0.243	94.8	80-120

Associated samples MP19459: F77897-1, F77897-2, F77897-3, F77897-4, F77897-5, F77897-6, F77897-7, F77897-8, F77897-9, F77897-10, F77897-11, F77897-12, F77897-13, F77897-14, F77897-15, F77897-16, F77897-17, F77897-18, F77897-19, F77897-20

Results < IDL are shown as zero for calculation purposes
(*) Outside of QC limits
(N) Matrix Spike Rec. outside of QC limits
(anr) Analyte not requested

MATRIX SPIKE AND DUPLICATE RESULTS SUMMARY

Login Number: F77897
Account: TETTNOAK - Tetra Tech, Inc
Project: Holloman AFB; Alamogordo, NM

QC Batch ID: MP19459
Matrix Type: SOLID

Methods: SW846 7471B
Units: mg/kg

Prep Date: 11/11/10

Metal	F77897-1 Original	MSD	Spikelot HGFLWS1	% Rec	MSD RPD	QC Limit
Mercury	0.0	0.22	0.235	93.5	4.4	20

Associated samples MP19459: F77897-1, F77897-2, F77897-3, F77897-4, F77897-5, F77897-6, F77897-7, F77897-8, F77897-9, F77897-10, F77897-11, F77897-12, F77897-13, F77897-14, F77897-15, F77897-16, F77897-17, F77897-18, F77897-19, F77897-20

Results < IDL are shown as zero for calculation purposes
(*) Outside of QC limits
(N) Matrix Spike Rec. outside of QC limits
(anr) Analyte not requested

SPIKE BLANK AND LAB CONTROL SAMPLE SUMMARY

Login Number: F77897
Account: TETTNOAK - Tetra Tech, Inc
Project: Holloman AFB; Alamogordo, NM

QC Batch ID: MP19459
Matrix Type: SOLID

Methods: SW846 7471B
Units: mg/kg

Prep Date: 11/11/10

Metal	BSP Result	Spikelot HGFLWS1	% Rec	QC Limits
Mercury	0.23	0.25	92.0	80-120

Associated samples MP19459: F77897-1, F77897-2, F77897-3, F77897-4, F77897-5, F77897-6, F77897-7, F77897-8, F77897-9, F77897-10, F77897-11, F77897-12, F77897-13, F77897-14, F77897-15, F77897-16, F77897-17, F77897-18, F77897-19, F77897-20

Results < IDL are shown as zero for calculation purposes
(*) Outside of QC limits
(anr) Analyte not requested

SERIAL DILUTION RESULTS SUMMARY

Login Number: F77897
Account: TETTNOAK - Tetra Tech, Inc
Project: Holloman AFB; Alamogordo, NM

QC Batch ID: MP19459
Matrix Type: SOLID

Methods: SW846 7471B
Units: ug/l

Prep Date: 11/11/10

Metal	F77897-1 Original	SDL 1:5	%DIF	QC Limits
Mercury	0.00	0.00	NC	0-10

Associated samples MP19459: F77897-1, F77897-2, F77897-3, F77897-4, F77897-5, F77897-6, F77897-7, F77897-8, F77897-9, F77897-10, F77897-11, F77897-12, F77897-13, F77897-14, F77897-15, F77897-16, F77897-17, F77897-18, F77897-19, F77897-20

Results < IDL are shown as zero for calculation purposes
(*) Outside of QC limits
(anr) Analyte not requested

BLANK RESULTS SUMMARY
Part 2 - Method Blanks

Login Number: F77897
Account: TETTNOAK - Tetra Tech, Inc
Project: Holloman AFB; Alamogordo, NM

QC Batch ID: MP19463
Matrix Type: AQUEOUS

Methods: SW846 6010C
Units: ug/l

Prep Date: 11/11/10

Metal	RL	IDL	MDL	MB raw	final
Aluminum	200	20	25		
Antimony	12	1	2		
Arsenic	10	1	2	-2.1	<10
Barium	200	1	5	-2.4	<200
Beryllium	4.0	.1	1		
Cadmium	5.0	.1	1	-0.20	<5.0
Calcium	1000	50	100		
Chromium	10	1	1	0.0	<10
Cobalt	50	1	1		
Copper	25	1	2		
Iron	300	34	35		
Lead	5.0	1	1	-2.1	<5.0
Magnesium	5000	50	100		
Manganese	15	1	1		
Molybdenum	50	1	2		
Nickel	40	1	2		
Potassium	10000	50	500		
Selenium	10	2	2	3.2	<10
Silver	10	1	1	-0.60	<10
Sodium	10000	750	1900		
Strontium	10	1	1		
Thallium	10	1	1.9		
Tin	50	1	1		
Titanium	10	1.1	2		
Vanadium	50	1	1		
Zinc	20	1	5		

Associated samples MP19463: F77897-39

Results < IDL are shown as zero for calculation purposes
(*) Outside of QC limits
(anr) Analyte not requested

MATRIX SPIKE AND DUPLICATE RESULTS SUMMARY

Login Number: F77897
Account: TETTNOAK - Tetra Tech, Inc
Project: Holloman AFB; Alamogordo, NM

QC Batch ID: MP19463
Matrix Type: AQUEOUS

Methods: SW846 6010C
Units: ug/l

Metal	F77889-38 Original	DUP	RPD	QC Limits	F77889-38 Original	MS	Spikelot MPFLICP1	% Rec	QC Limits
Prep Date:			11/11/10					11/11/10	
Aluminum									
Antimony	anr								
Arsenic	24.6	24.1	2.1	0-20	24.6	2190	2000	108.3	80-120
Barium	460	456	0.9	0-20	460	2590	2000	106.5	80-120
Beryllium	anr								
Cadmium	0.40	0.20	66.7 (a)	0-20	0.40	51.6	50	102.4	80-120
Calcium									
Chromium	6.9	7.7	11.0	0-20	6.9	222	200	107.6	80-120
Cobalt									
Copper	anr								
Iron	anr								
Lead	3.2	2.9	9.8	0-20	3.2	498	500	99.0	80-120
Magnesium									
Manganese	anr								
Molybdenum									
Nickel	anr								
Potassium									
Selenium	0.0	0.0	NC	0-20	0.0	2220	2000	111.0	80-120
Silver	0.0	0.0	NC	0-20	0.0	49.3	50	98.6	80-120
Sodium	anr								
Strontium									
Thallium	anr								
Tin									
Titanium									
Vanadium									
Zinc	anr								

Associated samples MP19463: F77897-39

Results < IDL are shown as zero for calculation purposes
(*) Outside of QC limits
(N) Matrix Spike Rec. outside of QC limits
(anr) Analyte not requested
(a) RPD acceptable due to low duplicate and sample concentrations.

MATRIX SPIKE AND DUPLICATE RESULTS SUMMARY

Login Number: F77897
Account: TETTNOAK - Tetra Tech, Inc
Project: Holloman AFB; Alamogordo, NM

QC Batch ID: MP19463
Matrix Type: AQUEOUS

Methods: SW846 6010C
Units: ug/l

Prep Date: 11/11/10

Metal	F77889-38 Original	MSD	Spikelot MPFLICP1	% Rec	MSD RPD	QC Limit
Aluminum						
Antimony	anr					
Arsenic	24.6	2190	2000	108.3	0.0	20
Barium	460	2610	2000	107.5	0.8	20
Beryllium	anr					
Cadmium	0.40	51.5	50	102.2	0.2	20
Calcium						
Chromium	6.9	222	200	107.6	0.0	20
Cobalt						
Copper	anr					
Iron	anr					
Lead	3.2	499	500	99.2	0.2	20
Magnesium						
Manganese	anr					
Molybdenum						
Nickel	anr					
Potassium						
Selenium	0.0	2220	2000	111.0	0.0	20
Silver	0.0	49.2	50	98.4	0.2	20
Sodium	anr					
Strontium						
Thallium	anr					
Tin						
Titanium						
Vanadium						
Zinc	anr					

Associated samples MP19463: F77897-39

Results < IDL are shown as zero for calculation purposes
(*) Outside of QC limits
(N) Matrix Spike Rec. outside of QC limits
(anr) Analyte not requested

SPIKE BLANK AND LAB CONTROL SAMPLE SUMMARY

Login Number: F77897
Account: TETTNOAK - Tetra Tech, Inc
Project: Holloman AFB; Alamogordo, NM

QC Batch ID: MP19463
Matrix Type: AQUEOUS

Methods: SW846 6010C
Units: ug/l

Prep Date: 11/11/10

Metal	BSP Result	Spikelot MPFLICP1	% Rec	QC Limits
Aluminum				
Antimony	anr			
Arsenic	2080	2000	104.0	80-120
Barium	2160	2000	108.0	80-120
Beryllium	anr			
Cadmium	52.5	50	105.0	80-120
Calcium				
Chromium	221	200	110.5	80-120
Cobalt				
Copper	anr			
Iron	anr			
Lead	480	500	96.0	80-120
Magnesium				
Manganese	anr			
Molybdenum				
Nickel	anr			
Potassium				
Selenium	2120	2000	106.0	80-120
Silver	46.1	50	92.2	80-120
Sodium	anr			
Strontium				
Thallium	anr			
Tin				
Titanium				
Vanadium				
Zinc	anr			

Associated samples MP19463: F77897-39

Results < IDL are shown as zero for calculation purposes
(*) Outside of QC limits
(anr) Analyte not requested

SERIAL DILUTION RESULTS SUMMARY

Login Number: F77897
Account: TETTNOAK - Tetra Tech, Inc
Project: Holloman AFB; Alamogordo, NM

QC Batch ID: MP19463
Matrix Type: AQUEOUS

Methods: SW846 6010C
Units: ug/l

Prep Date: 11/11/10

Metal	F77889-38 Original	SDL 1:5	%DIF	QC Limits
Aluminum				
Antimony	anr			
Arsenic	24.6	19.3	21.5 (a)	0-10
Barium	460	443	3.7	0-10
Beryllium	anr			
Cadmium	0.400	0.00	100.0(a)	0-10
Calcium				
Chromium	6.90	6.20	10.1 (a)	0-10
Cobalt				
Copper	anr			
Iron	anr			
Lead	3.20	0.00	100.0(a)	0-10
Magnesium				
Manganese	anr			
Molybdenum				
Nickel	anr			
Potassium				
Selenium	0.00	0.00	NC	0-10
Silver	0.00	0.00	NC	0-10
Sodium	anr			
Strontium				
Thallium	anr			
Tin				
Titanium				
Vanadium				
Zinc	anr			

Associated samples MP19463: F77897-39

Results < IDL are shown as zero for calculation purposes
(*) Outside of QC limits
(anr) Analyte not requested
(a) Percent difference acceptable due to low initial sample concentration (< 50 times IDL).

BLANK RESULTS SUMMARY
Part 2 - Method Blanks

Login Number: F77897
Account: TETTNOAK - Tetra Tech, Inc
Project: Holloman AFB; Alamogordo, NM

QC Batch ID: MP19469
Matrix Type: SOLID

Methods: SW846 7471B
Units: mg/kg

Prep Date: 11/12/10

Metal	RL	IDL	MDL	MB raw	final
Mercury	0.083	.0059	.0083	0.0075	<0.083

Associated samples MP19469: F77897-21, F77897-22, F77897-23

Results < IDL are shown as zero for calculation purposes
(*) Outside of QC limits
(anr) Analyte not requested

MATRIX SPIKE AND DUPLICATE RESULTS SUMMARY

Login Number: F77897
Account: TETTNOAK - Tetra Tech, Inc
Project: Holloman AFB; Alamogordo, NM

QC Batch ID: MP19469
Matrix Type: SOLID

Methods: SW846 7471B
Units: mg/kg

Prep Date: 11/12/10 11/12/10

Metal	F77964-10 Original	DUP	RPD	QC Limits	F77964-10 Original	MS	Spikelot HGFLWS1	% Rec	QC Limits
Mercury	0.015	0.019	23.5 (a)	0-20	0.015	0.33	0.295	106.8	80-120

Associated samples MP19469: F77897-21, F77897-22, F77897-23

Results < IDL are shown as zero for calculation purposes
(*) Outside of QC limits
(N) Matrix Spike Rec. outside of QC limits
(anr) Analyte not requested
(a) RPD acceptable due to low duplicate and sample concentrations.

MATRIX SPIKE AND DUPLICATE RESULTS SUMMARY

Login Number: F77897
Account: TETTNOAK - Tetra Tech, Inc
Project: Holloman AFB; Alamogordo, NM

QC Batch ID: MP19469
Matrix Type: SOLID

Methods: SW846 7471B
Units: mg/kg

Prep Date: 11/12/10

Metal	F77964-10 Original	MSD	Spikelot HGFLWS1	% Rec	MSD RPD	QC Limit
Mercury	0.015	0.35	0.29	115.3	5.9	20

Associated samples MP19469: F77897-21, F77897-22, F77897-23

Results < IDL are shown as zero for calculation purposes
(*) Outside of QC limits
(N) Matrix Spike Rec. outside of QC limits
(anr) Analyte not requested

SPIKE BLANK AND LAB CONTROL SAMPLE SUMMARY

Login Number: F77897
Account: TETTNOAK - Tetra Tech, Inc
Project: Holloman AFB; Alamogordo, NM

QC Batch ID: MP19469
Matrix Type: SOLID

Methods: SW846 7471B
Units: mg/kg

Prep Date: 11/12/10

Metal	BSP Result	Spikelot HGFLWS1	% Rec	QC Limits
Mercury	0.25	0.25	100.0	80-120

Associated samples MP19469: F77897-21, F77897-22, F77897-23

Results < IDL are shown as zero for calculation purposes
(*) Outside of QC limits
(anr) Analyte not requested

SERIAL DILUTION RESULTS SUMMARY

Login Number: F77897
Account: TETTNOAK - Tetra Tech, Inc
Project: Holloman AFB; Alamogordo, NM

QC Batch ID: MP19469
Matrix Type: SOLID

Methods: SW846 7471B
Units: ug/l

Prep Date: 11/12/10

Metal	F77964-10 Original	SDL 1:5	%DIF	QC Limits
Mercury	0.151	0.00	100.0(a)	0-10

Associated samples MP19469: F77897-21, F77897-22, F77897-23

Results < IDL are shown as zero for calculation purposes
(*) Outside of QC limits
(anr) Analyte not requested
(a) Percent difference acceptable due to low initial sample concentration (< 50 times IDL).

BLANK RESULTS SUMMARY
Part 2 - Method Blanks

Login Number: F77897
Account: TETTNOAK - Tetra Tech, Inc
Project: Holloman AFB; Alamogordo, NM

QC Batch ID: MP19470
Matrix Type: SOLID

Methods: SW846 7471B
Units: mg/kg

Prep Date: 11/12/10

Metal	RL	IDL	MDL	MB raw	final
Mercury	0.083	.0059	.0083	0.011	<0.083

Associated samples MP19470: F77897-24, F77897-25, F77897-26, F77897-27, F77897-28, F77897-29, F77897-30, F77897-31, F77897-32, F77897-33

Results < IDL are shown as zero for calculation purposes
(*) Outside of QC limits
(anr) Analyte not requested

MATRIX SPIKE AND DUPLICATE RESULTS SUMMARY

Login Number: F77897
Account: TETTNOAK - Tetra Tech, Inc
Project: Holloman AFB; Alamogordo, NM

QC Batch ID: MP19470
Matrix Type: SOLID

Methods: SW846 7471B
Units: mg/kg

Prep Date: 11/12/10 11/12/10

Metal	F77897-24 Original	DUP	RPD	QC Limits	F77897-24 Original	MS	Spikelot HGFLWS1	% Rec	QC Limits
Mercury	0.0	0.0	NC	0-20	0.0	0.26	0.256	101.7	80-120

Associated samples MP19470: F77897-24, F77897-25, F77897-26, F77897-27, F77897-28, F77897-29, F77897-30, F77897-31, F77897-32, F77897-33

Results < IDL are shown as zero for calculation purposes
(*) Outside of QC limits
(N) Matrix Spike Rec. outside of QC limits
(anr) Analyte not requested

9.16.2

9

MATRIX SPIKE AND DUPLICATE RESULTS SUMMARY

Login Number: F77897
Account: TETTNOAK - Tetra Tech, Inc
Project: Holloman AFB; Alamogordo, NM

QC Batch ID: MP19470
Matrix Type: SOLID

Methods: SW846 7471B
Units: mg/kg

Prep Date: 11/12/10

Metal	F77897-24 Original	MSD	Spikelot HGFLWS1	% Rec	MSD RPD	QC Limit
Mercury	0.0	0.28	0.272	103.1	7.4	20

Associated samples MP19470: F77897-24, F77897-25, F77897-26, F77897-27, F77897-28, F77897-29, F77897-30, F77897-31, F77897-32, F77897-33

Results < IDL are shown as zero for calculation purposes
(*) Outside of QC limits
(N) Matrix Spike Rec. outside of QC limits
(anr) Analyte not requested

SPIKE BLANK AND LAB CONTROL SAMPLE SUMMARY

Login Number: F77897
Account: TETTNOAK - Tetra Tech, Inc
Project: Holloman AFB; Alamogordo, NM

QC Batch ID: MP19470
Matrix Type: SOLID

Methods: SW846 7471B
Units: mg/kg

Prep Date: 11/12/10

Metal	BSP Result	Spikelot HGFLWS1	% Rec	QC Limits
Mercury	0.26	0.25	104.0	80-120

Associated samples MP19470: F77897-24, F77897-25, F77897-26, F77897-27, F77897-28, F77897-29, F77897-30, F77897-31, F77897-32, F77897-33

Results < IDL are shown as zero for calculation purposes
(*) Outside of QC limits
(anr) Analyte not requested

SERIAL DILUTION RESULTS SUMMARY

Login Number: F77897
Account: TETTNOAK - Tetra Tech, Inc
Project: Holloman AFB; Alamogordo, NM

QC Batch ID: MP19470
Matrix Type: SOLID

Methods: SW846 7471B
Units: ug/l

Prep Date: 11/12/10

Metal	F77897-24 Original	SDL 1:5	%DIF	QC Limits
Mercury	0.00	0.00	NC	0-10

Associated samples MP19470: F77897-24, F77897-25, F77897-26, F77897-27, F77897-28, F77897-29, F77897-30, F77897-31, F77897-32, F77897-33

Results < IDL are shown as zero for calculation purposes
(*) Outside of QC limits
(anr) Analyte not requested

BLANK RESULTS SUMMARY
Part 2 - Method Blanks

Login Number: F77897
Account: TETTNOAK - Tetra Tech, Inc
Project: Holloman AFB; Alamogordo, NM

QC Batch ID: MP19474
Matrix Type: LEACHATE

Methods: SW846 6010C
Units: mg/l

Prep Date:					11/12/10		11/12/10		11/12/10
Metal	RL	IDL	MDL	MB raw	final	MB raw	final	MB raw	final
Aluminum	0.20	.02	.025						
Antimony	0.0060	.001	.002						
Arsenic	0.050	.001	.002						
Barium	1.0	.001	.005						
Beryllium	0.0040	.0001	.001						
Cadmium	0.0050	.0001	.001						
Calcium	1.0	.05	.1						
Chromium	0.010	.001	.001						
Cobalt	0.050	.001	.001						
Copper	0.025	.001	.002						
Iron	0.30	.034	.035						
Lead	0.050	.001	.001	-0.00050	<0.050	0.0060	<0.50	-0.0040	<0.50
Magnesium	5.0	.05	.1						
Manganese	0.015	.001	.001						
Molybdenum	0.050	.001	.002						
Nickel	0.040	.001	.002						
Potassium	10	.05	.5						
Selenium	0.050	.002	.002						
Silver	0.010	.001	.001						
Sodium	10	.75	1.9						
Strontium	0.010	.001	.001						
Thallium	0.010	.001	.0019						
Tin	0.050	.001	.001						
Titanium	0.010	.0011	.002						
Vanadium	0.050	.001	.001						
Zinc	0.10	.001	.005						

Associated samples MP19474: F77897-40, F77897-41

Results < IDL are shown as zero for calculation purposes
(*) Outside of QC limits
(anr) Analyte not requested

MATRIX SPIKE AND DUPLICATE RESULTS SUMMARY

Login Number: F77897
Account: TETTNOAK - Tetra Tech, Inc
Project: Holloman AFB; Alamogordo, NM

QC Batch ID: MP19474
Matrix Type: LEACHATE

Methods: SW846 6010C
Units: mg/l

Prep Date: 11/12/10

Metal	F77771-1A Original	MS	Spikelot MPFLICP1	% Rec	QC Limits
Aluminum					
Antimony	anr				
Arsenic	anr				
Barium	anr				
Beryllium	anr				
Cadmium	anr				
Calcium					
Chromium	anr				
Cobalt					
Copper					
Iron					
Lead	0.0	4.9	5.0	98.0	80-120
Magnesium					
Manganese					
Molybdenum					
Nickel	anr				
Potassium					
Selenium	anr				
Silver	anr				
Sodium					
Strontium					
Thallium	anr				
Tin					
Titanium					
Vanadium					
Zinc					

Associated samples MP19474: F77897-40, F77897-41

Results < IDL are shown as zero for calculation purposes
(*) Outside of QC limits
(N) Matrix Spike Rec. outside of QC limits
(anr) Analyte not requested

MATRIX SPIKE AND DUPLICATE RESULTS SUMMARY

Login Number: F77897
Account: TETTNOAK - Tetra Tech, Inc
Project: Holloman AFB; Alamogordo, NM

QC Batch ID: MP19474
Matrix Type: LEACHATE

Methods: SW846 6010C
Units: mg/l

Metal	F77771-1A Original	MSD	Spikelot MPFLICP1	% Rec	MSD RPD	QC Limit	F77897-41 Original	DUP	RPD	QC Limits
Prep Date:					11/12/10				11/12/10	
Aluminum										
Antimony	anr									
Arsenic	anr									
Barium	anr									
Beryllium	anr									
Cadmium	anr									
Calcium										
Chromium	anr									
Cobalt										
Copper										
Iron										
Lead	0.0	4.8	5.0	96.0	2.1	20	0.0	0.0	NC	0-20
Magnesium										
Manganese										
Molybdenum										
Nickel	anr									
Potassium										
Selenium	anr									
Silver	anr									
Sodium										
Strontium										
Thallium	anr									
Tin										
Titanium										
Vanadium										
Zinc										

Associated samples MP19474: F77897-40, F77897-41

Results < IDL are shown as zero for calculation purposes
(*) Outside of QC limits
(N) Matrix Spike Rec. outside of QC limits
(anr) Analyte not requested

SPIKE BLANK AND LAB CONTROL SAMPLE SUMMARY

Login Number: F77897
Account: TETTNOAK - Tetra Tech, Inc
Project: Holloman AFB; Alamogordo, NM

QC Batch ID: MP19474
Matrix Type: LEACHATE

Methods: SW846 6010C
Units: mg/l

Prep Date:		11/12/10				11/12/10		
Metal	BSP Result	Spikelot MPFLICP1	% Rec	QC Limits	BSP Result	Spikelot MPFLICP1	% Rec	QC Limits
Aluminum								
Antimony	anr							
Arsenic	anr							
Barium	anr							
Beryllium	anr							
Cadmium	anr							
Calcium								
Chromium	anr							
Cobalt								
Copper								
Iron								
Lead	0.48	0.50	96.0	80-120	5.2	5.0	104.0	80-120
Magnesium								
Manganese								
Molybdenum								
Nickel	anr							
Potassium								
Selenium	anr							
Silver	anr							
Sodium								
Strontium								
Thallium	anr							
Tin								
Titanium								
Vanadium								
Zinc								

Associated samples MP19474: F77897-40, F77897-41

Results < IDL are shown as zero for calculation purposes
(*) Outside of QC limits
(anr) Analyte not requested

SPIKE BLANK AND LAB CONTROL SAMPLE SUMMARY

Login Number: F77897
Account: TETTNOAK - Tetra Tech, Inc
Project: Holloman AFB; Alamogordo, NM

QC Batch ID: MP19474
Matrix Type: LEACHATE

Methods: SW846 6010C
Units: mg/l

Prep Date: 11/12/10

Metal	BSP Result	Spikelot MPFLICP1	% Rec	QC Limits
Aluminum				
Antimony	anr			
Arsenic	anr			
Barium	anr			
Beryllium	anr			
Cadmium	anr			
Calcium				
Chromium	anr			
Cobalt				
Copper				
Iron				
Lead	4.9	5.0	98.0	80-120
Magnesium				
Manganese				
Molybdenum				
Nickel	anr			
Potassium				
Selenium	anr			
Silver	anr			
Sodium				
Strontium				
Thallium	anr			
Tin				
Titanium				
Vanadium				
Zinc				

Associated samples MP19474: F77897-40, F77897-41

Results < IDL are shown as zero for calculation purposes
(*) Outside of QC limits
(anr) Analyte not requested

SERIAL DILUTION RESULTS SUMMARY

Login Number: F77897
Account: TETTNOAK - Tetra Tech, Inc
Project: Holloman AFB; Alamogordo, NM

QC Batch ID: MP19474
Matrix Type: LEACHATE

Methods: SW846 6010C
Units: ug/l

Prep Date: 11/12/10

Metal	F77771-1A Original	SDL 1:5	%DIF	QC Limits
Aluminum				
Antimony	anr			
Arsenic	anr			
Barium	anr			
Beryllium	anr			
Cadmium	anr			
Calcium				
Chromium	anr			
Cobalt				
Copper				
Iron				
Lead	0.00	0.00	NC	0-10
Magnesium				
Manganese				
Molybdenum				
Nickel	anr			
Potassium				
Selenium	anr			
Silver	anr			
Sodium				
Strontium				
Thallium	anr			
Tin				
Titanium				
Vanadium				
Zinc				

Associated samples MP19474: F77897-40, F77897-41

Results < IDL are shown as zero for calculation purposes
(*) Outside of QC limits
(anr) Analyte not requested

BLANK RESULTS SUMMARY
Part 2 - Method Blanks

Login Number: F77897
Account: TETTNOAK - Tetra Tech, Inc
Project: Holloman AFB; Alamogordo, NM

QC Batch ID: MP19483
Matrix Type: SOLID

Methods: SW846 6010C
Units: mg/kg

Prep Date: 11/15/10

Metal	RL	IDL	MDL	MB raw	final
Aluminum	10	1	1.2		
Antimony	1.0	.05	.1		
Arsenic	0.50	.05	.1	-0.21	<0.50
Barium	10	.05	.5	-0.15	<10
Beryllium	0.25	.005	.05		
Cadmium	0.20	.005	.05	-0.010	<0.20
Calcium	250	2.5	5		
Chromium	0.50	.05	.05	0.085	<0.50
Cobalt	2.5	.05	.05		
Copper	1.3	.05	.1		
Iron	15	1.7	1.7		
Lead	1.0	.05	.05	-0.0050	<1.0
Magnesium	250	2.5	5		
Manganese	0.75	.05	.05		
Molybdenum	2.5	.05	.05		
Nickel	2.0	.05	.05		
Potassium	500	2.5	25		
Selenium	1.0	.1	.2	0.17	<1.0
Silver	0.50	.05	.05	-0.040	<0.50
Sodium	500	38	55		
Strontium	0.50	.05	.05		
Thallium	0.50	.05	.13		
Tin	2.5	.05	.05		
Titanium	0.50	.055	.1		
Vanadium	2.5	.05	.05		
Zinc	1.0	.05	.25		

Associated samples MP19483: F77897-1, F77897-2, F77897-3, F77897-4, F77897-5, F77897-6, F77897-7, F77897-8, F77897-9, F77897-10, F77897-11, F77897-12, F77897-13, F77897-14, F77897-15, F77897-16, F77897-17, F77897-18, F77897-19

Results < IDL are shown as zero for calculation purposes
(*) Outside of QC limits
(anr) Analyte not requested

MATRIX SPIKE AND DUPLICATE RESULTS SUMMARY

Login Number: F77897
Account: TETTNOAK - Tetra Tech, Inc
Project: Holloman AFB; Alamogordo, NM

QC Batch ID: MP19483
Matrix Type: SOLID

Methods: SW846 6010C
Units: mg/kg

Prep Date:			11/15/10					11/15/10	
Metal	F77897-1 Original	DUP	RPD	QC Limits	F77897-1 Original	MS	Spikelot MPFLICP1	% Rec	QC Limits
Aluminum									
Antimony									
Arsenic	0.37	0.33	11.4	0-20	0.37	90.7	77.8	116.1	80-120
Barium	24.6	23.8	3.3	0-20	24.6	105	77.8	103.3	80-120
Beryllium									
Cadmium	0.15	0.13	14.3	0-20	0.15	1.7	1.95	79.7N(c)	80-120
Calcium									
Chromium	1.3	0.0 (a)	200.0(b)	0-20	1.3	10.4 (a)	7.78	116.9	80-120
Cobalt									
Copper									
Iron									
Lead	0.0	0.0 (a)	NC (b)	0-20	0.0	15.9 (a)	19.5	80.6	80-120
Magnesium									
Manganese									
Molybdenum									
Nickel									
Potassium									
Selenium	0.0	0.0 (a)	NC	0-20	0.0	87.6 (a)	77.8	112.5	80-120
Silver	0.0	0.0	NC	0-20	0.0	2.3	1.95	118.2	80-120
Sodium									
Strontium									
Thallium									
Tin									
Titanium									
Vanadium									
Zinc									

Associated samples MP19483: F77897-1, F77897-2, F77897-3, F77897-4, F77897-5, F77897-6, F77897-7, F77897-8, F77897-9, F77897-10, F77897-11, F77897-12, F77897-13, F77897-14, F77897-15, F77897-16, F77897-17, F77897-18, F77897-19

Results < IDL are shown as zero for calculation purposes
(*) Outside of QC limits
(N) Matrix Spike Rec. outside of QC limits
(anr) Analyte not requested
(a) Elevated reporting limit(s) due to matrix interference.
(b) RPD acceptable due to low duplicate and sample concentrations.
(c) Spike recovery indicates possible matrix interference and/or sample nonhomogeneity.

MATRIX SPIKE AND DUPLICATE RESULTS SUMMARY

Login Number: F77897
Account: TETTNOAK - Tetra Tech, Inc
Project: Holloman AFB; Alamogordo, NM

QC Batch ID: MP19483
Matrix Type: SOLID

Methods: SW846 6010C
Units: mg/kg

Prep Date: 11/15/10

Metal	F77897-1 Original	MSD	Spikelot MPFLICP1	% Rec	MSD RPD	QC Limit
Aluminum						
Antimony						
Arsenic	0.37	90.7	80.2	112.6	0.0	20
Barium	24.6	107	80.2	102.7	1.9	20
Beryllium						
Cadmium	0.15	1.7	2.01	77.3N(a)	0.0	20
Calcium						
Chromium	1.3	10.2 (b)	8.02	110.9	9.2	20
Cobalt						
Copper						
Iron						
Lead	0.0	16.1 (b)	20.1	79.2N(a)	1.3	20
Magnesium						
Manganese						
Molybdenum						
Nickel						
Potassium						
Selenium	0.0	86.0 (b)	80.2	107.2	16.0	20
Silver	0.0	2.2	2.01	109.7	4.4	20
Sodium						
Strontium						
Thallium						
Tin						
Titanium						
Vanadium						
Zinc						

Associated samples MP19483: F77897-1, F77897-2, F77897-3, F77897-4, F77897-5, F77897-6, F77897-7, F77897-8, F77897-9, F77897-10, F77897-11, F77897-12, F77897-13, F77897-14, F77897-15, F77897-16, F77897-17, F77897-18, F77897-19

Results < IDL are shown as zero for calculation purposes
(*) Outside of QC limits
(N) Matrix Spike Rec. outside of QC limits
(anr) Analyte not requested
(a) Spike recovery indicates possible matrix interference and/or sample nonhomogeneity.
(b) Elevated reporting limit(s) due to matrix interference.

SPIKE BLANK AND LAB CONTROL SAMPLE SUMMARY

Login Number: F77897
Account: TETTNOAK - Tetra Tech, Inc
Project: Holloman AFB; Alamogordo, NM

QC Batch ID: MP19483
Matrix Type: SOLID

Methods: SW846 6010C
Units: mg/kg

Prep Date: 11/15/10

Metal	BSP Result	Spikelot MPFLICP1	% Rec	QC Limits
Aluminum				
Antimony				
Arsenic	99.0	100	99.0	80-120
Barium	113	100	113.0	80-120
Beryllium				
Cadmium	2.6	2.5	104.0	80-120
Calcium				
Chromium	11.2	10	112.0	80-120
Cobalt				
Copper				
Iron				
Lead	23.6	25	94.4	80-120
Magnesium				
Manganese				
Molybdenum				
Nickel				
Potassium				
Selenium	98.4	100	98.4	80-120
Silver	2.4	2.5	96.0	80-120
Sodium				
Strontium				
Thallium				
Tin				
Titanium				
Vanadium				
Zinc				

Associated samples MP19483: F77897-1, F77897-2, F77897-3, F77897-4, F77897-5, F77897-6, F77897-7, F77897-8, F77897-9, F77897-10, F77897-11, F77897-12, F77897-13, F77897-14, F77897-15, F77897-16, F77897-17, F77897-18, F77897-19

Results < IDL are shown as zero for calculation purposes
(*) Outside of QC limits
(anr) Analyte not requested

SERIAL DILUTION RESULTS SUMMARY

Login Number: F77897
Account: TETTNOAK - Tetra Tech, Inc
Project: Holloman AFB; Alamogordo, NM

QC Batch ID: MP19483
Matrix Type: SOLID

Methods: SW846 6010C
Units: ug/l

Prep Date: 11/15/10

Metal	F77897-1 Original	SDL 1:5	%DIF	QC Limits
Aluminum				
Antimony				
Arsenic	8.10	0.00	100.0(a)	0-10
Barium	543	550	1.4	0-10
Beryllium				
Cadmium	3.40	0.00	100.0(a)	0-10
Calcium				
Chromium	28.0	0.00	100.0(a)	0-10
Cobalt				
Copper				
Iron				
Lead	0.00	0.00	NC (a)	0-10
Magnesium				
Manganese				
Molybdenum				
Nickel				
Potassium				
Selenium	0.00	0.00	NC	0-10
Silver	0.00	0.00	NC	0-10
Sodium				
Strontium				
Thallium				
Tin				
Titanium				
Vanadium				
Zinc				

Associated samples MP19483: F77897-1, F77897-2, F77897-3, F77897-4, F77897-5, F77897-6, F77897-7, F77897-8, F77897-9, F77897-10, F77897-11, F77897-12, F77897-13, F77897-14, F77897-15, F77897-16, F77897-17, F77897-18, F77897-19

Results < IDL are shown as zero for calculation purposes
(*) Outside of QC limits
(anr) Analyte not requested
(a) Percent difference acceptable due to low initial sample concentration (< 50 times IDL).

POST DIGESTATE SPIKE SUMMARY

Login Number: F77897
Account: TETTNOAK - Tetra Tech, Inc
Project: Holloman AFB; Alamogordo, NM

QC Batch ID: MP19483
Matrix Type: SOLID

Methods: SW846 6010C
Units: ug/l

Prep Date: 11/15/10

Metal	Sample ml	Final ml	F77897-1 Raw	Corr.**	PS ug/l	Spike ml	Spike ug/ml	Spike ug/l	% Rec	QC Limits
Aluminum										
Antimony										
Arsenic										
Barium										
Beryllium										
Cadmium	9.8	10	3.4	3.332	43.5	0.2	2.5	50	80.3	80-120
Calcium										
Chromium										
Cobalt										
Copper										
Iron										
Lead										
Magnesium										
Manganese										
Molybdenum										
Nickel										
Potassium										
Selenium										
Silver										
Sodium										
Strontium										
Thallium										
Tin										
Titanium										
Vanadium										
Zinc										

Associated samples MP19483: F77897-1, F77897-2, F77897-3, F77897-4, F77897-5, F77897-6, F77897-7, F77897-8, F77897-9, F77897-10, F77897-11, F77897-12, F77897-13, F77897-14, F77897-15, F77897-16, F77897-17, F77897-18, F77897-19

Results < IDL are shown as zero for calculation purposes
(*) Outside of QC limits
(**) Corr. sample result = Raw * (sample volume / final volume)
(anr) Analyte not requested

BLANK RESULTS SUMMARY
Part 2 - Method Blanks

Login Number: F77897
Account: TETTNOAK - Tetra Tech, Inc
Project: Holloman AFB; Alamogordo, NM

QC Batch ID: MP19486
Matrix Type: SOLID

Methods: SW846 6010C
Units: mg/kg

Prep Date: 11/17/10

Metal	RL	IDL	MDL	MB raw	final
Aluminum	10	1	1.2		
Antimony	1.0	.05	.1		
Arsenic	0.50	.05	.1	-0.12	<0.50
Barium	10	.05	.5	-0.21	<10
Beryllium	0.25	.005	.05		
Cadmium	0.20	.005	.05	0.0	<0.20
Calcium	250	2.5	5		
Chromium	0.50	.05	.05	0.080	<0.50
Cobalt	2.5	.05	.05		
Copper	1.3	.05	.1		
Iron	15	1.7	1.7		
Lead	1.0	.05	.05	0.035	<1.0
Magnesium	250	2.5	5		
Manganese	0.75	.05	.05		
Molybdenum	2.5	.05	.05		
Nickel	2.0	.05	.05		
Potassium	500	2.5	25		
Selenium	1.0	.1	.2	0.11	<1.0
Silver	0.50	.05	.05	-0.010	<0.50
Sodium	500	38	55		
Strontium	0.50	.05	.05		
Thallium	0.50	.05	.13		
Tin	2.5	.05	.05		
Titanium	0.50	.055	.1		
Vanadium	2.5	.05	.05		
Zinc	1.0	.05	.25		

Associated samples MP19486: F77897-20, F77897-21, F77897-22, F77897-23, F77897-24, F77897-25, F77897-26, F77897-27, F77897-28, F77897-29

Results < IDL are shown as zero for calculation purposes
(*) Outside of QC limits
(anr) Analyte not requested

MATRIX SPIKE AND DUPLICATE RESULTS SUMMARY

Login Number: F77897
Account: TETTNOAK - Tetra Tech, Inc
Project: Holloman AFB; Alamogordo, NM

QC Batch ID: MP19486
Matrix Type: SOLID

Methods: SW846 6010C
Units: mg/kg

Prep Date:			11/17/10					11/17/10	
Metal	F77897-24 Original	DUP	RPD	QC Limits	F77897-24 Original	MS	Spikelot MPFLICP1	% Rec	QC Limits
Aluminum									
Antimony	anr								
Arsenic	0.90	0.83	8.1	0-20	0.90	85.9	76.7	110.8	80-120
Barium	84.5	68.7	20.6*(a)	0-20	84.5	126	76.7	54.1N(d)	80-120
Beryllium	anr								
Cadmium	0.11	0.13	16.7	0-20	0.11	1.7	1.92	82.9	80-120
Calcium									
Chromium	9.0	7.1 (b)	23.6 (c)	0-20	9.0	14.5 (b)	7.67	71.7N(d)	80-120
Cobalt									
Copper	anr								
Iron	anr								
Lead	3.7	3.3 (b)	11.4	0-20	3.7	22.2 (b)	19.2	96.4	80-120
Magnesium									
Manganese	anr								
Molybdenum									
Nickel	anr								
Potassium									
Selenium	0.0	0.0 (b)	NC	0-20	0.0	85.4 (b)	76.7	111.3	80-120
Silver	0.0	0.0	NC	0-20	0.0	1.9	1.92	99.0	80-120
Sodium									
Strontium									
Thallium	anr								
Tin									
Titanium									
Vanadium									
Zinc	anr								

Associated samples MP19486: F77897-20, F77897-21, F77897-22, F77897-23, F77897-24, F77897-25, F77897-26, F77897-27, F77897-28, F77897-29

Results < IDL are shown as zero for calculation purposes
(*) Outside of QC limits
(N) Matrix Spike Rec. outside of QC limits
(anr) Analyte not requested
(a) High RPD due to possible sample nonhomogeneity.
(b) Elevated reporting limit(s) due to matrix interference.
(c) RPD acceptable due to low duplicate and sample concentrations.
(d) Spike recovery indicates possible matrix interference and/or sample nonhomogeneity.

MATRIX SPIKE AND DUPLICATE RESULTS SUMMARY

Login Number: F77897
Account: TETTNOAK - Tetra Tech, Inc
Project: Holloman AFB; Alamogordo, NM

QC Batch ID: MP19486
Matrix Type: SOLID

Methods: SW846 6010C
Units: mg/kg

Prep Date: 11/17/10

Metal	F77897-24 Original	MSD	Spikelot MPFLICP1	% Rec	MSD RPD	QC Limit
Aluminum						
Antimony	anr					
Arsenic	0.90	88.6	82.8	106.0	3.1	20
Barium	84.5	130	82.8	55.0N(a)	3.1	20
Beryllium	anr					
Cadmium	0.11	1.8	2.07	81.7	5.7	20
Calcium						
Chromium	9.0	16.1 (b)	8.28	85.8	10.5	20
Cobalt						
Copper	anr					
Iron	anr					
Lead	3.7	24.6 (b)	20.7	101.0	10.3	20
Magnesium						
Manganese	anr					
Molybdenum						
Nickel	anr					
Potassium						
Selenium	0.0	91.0 (b)	82.8	109.9	6.3	20
Silver	0.0	2.0	2.07	96.7	5.1	20
Sodium						
Strontium						
Thallium	anr					
Tin						
Titanium						
Vanadium						
Zinc	anr					

Associated samples MP19486: F77897-20, F77897-21, F77897-22, F77897-23, F77897-24, F77897-25, F77897-26, F77897-27, F77897-28, F77897-29

Results < IDL are shown as zero for calculation purposes
(*) Outside of QC limits
(N) Matrix Spike Rec. outside of QC limits
(anr) Analyte not requested
(a) Spike recovery indicates possible matrix interference and/or sample nonhomogeneity.
(b) Elevated reporting limit(s) due to matrix interference.

SPIKE BLANK AND LAB CONTROL SAMPLE SUMMARY

Login Number: F77897
Account: TETTNOAK - Tetra Tech, Inc
Project: Holloman AFB; Alamogordo, NM

QC Batch ID: MP19486
Matrix Type: SOLID

Methods: SW846 6010C
Units: mg/kg

Prep Date: 11/17/10

Metal	BSP Result	Spikelot MPFLICP1	% Rec	QC Limits
Aluminum				
Antimony	anr			
Arsenic	98.9	100	98.9	80-120
Barium	108	100	108.0	80-120
Beryllium	anr			
Cadmium	2.5	2.5	100.0	80-120
Calcium				
Chromium	10.8	10	108.0	80-120
Cobalt				
Copper	anr			
Iron	anr			
Lead	23.5	25	94.0	80-120
Magnesium				
Manganese	anr			
Molybdenum				
Nickel	anr			
Potassium				
Selenium	99.2	100	99.2	80-120
Silver	2.2	2.5	88.0	80-120
Sodium				
Strontium				
Thallium	anr			
Tin				
Titanium				
Vanadium				
Zinc	anr			

Associated samples MP19486: F77897-20, F77897-21, F77897-22, F77897-23, F77897-24, F77897-25, F77897-26, F77897-27, F77897-28, F77897-29

Results < IDL are shown as zero for calculation purposes
(*) Outside of QC limits
(anr) Analyte not requested

SERIAL DILUTION RESULTS SUMMARY

Login Number: F77897
Account: TETTNOAK - Tetra Tech, Inc
Project: Holloman AFB; Alamogordo, NM

QC Batch ID: MP19486
Matrix Type: SOLID

Methods: SW846 6010C
Units: ug/l

Prep Date: 11/17/10

Metal	F77897-24 Original	SDL 1:5	%DIF	QC Limits
Aluminum				
Antimony	anr			
Arsenic	17.1	21.2	24.0 (a)	0-10
Barium	1600	1690	5.3	0-10
Beryllium	anr			
Cadmium	2.10	0.00	100.0(a)	0-10
Calcium				
Chromium	171	182	6.3	0-10
Cobalt				
Copper	anr			
Iron	anr			
Lead	69.8	76.5	9.6	0-10
Magnesium				
Manganese	anr			
Molybdenum				
Nickel	anr			
Potassium				
Selenium	0.00	0.00	NC	0-10
Silver	0.00	0.00	NC	0-10
Sodium				
Strontium				
Thallium	anr			
Tin				
Titanium				
Vanadium				
Zinc	anr			

Associated samples MP19486: F77897-20, F77897-21, F77897-22, F77897-23, F77897-24, F77897-25, F77897-26, F77897-27, F77897-28, F77897-29

Results < IDL are shown as zero for calculation purposes
(*) Outside of QC limits
(anr) Analyte not requested
(a) Percent difference acceptable due to low initial sample concentration (< 50 times IDL).

POST DIGESTATE SPIKE SUMMARY

Login Number: F77897
Account: TETTNOAK - Tetra Tech, Inc
Project: Holloman AFB; Alamogordo, NM

QC Batch ID: MP19486
Matrix Type: SOLID

Methods: SW846 6010C
Units: ug/l

Prep Date: 11/17/10

Metal	Sample ml	Final ml	F77897-24 Raw	Corr.**	PS ug/l	Spike ml	Spike ug/ml	Spike ug/l	% Rec	QC Limits
Aluminum										
Antimony										
Arsenic										
Barium	9.8	10	1604	1571.92	1827	0.2	12.5	250	102.0	80-120
Beryllium										
Cadmium										
Calcium										
Chromium	9.8	10	171.1	167.678	216.3	0.2	2.5	50	97.2	80-120
Cobalt										
Copper										
Iron										
Lead										
Magnesium										
Manganese										
Molybdenum										
Nickel										
Potassium										
Selenium										
Silver										
Sodium										
Strontium										
Thallium										
Tin										
Titanium										
Vanadium										
Zinc										

Associated samples MP19486: F77897-20, F77897-21, F77897-22, F77897-23, F77897-24, F77897-25, F77897-26, F77897-27, F77897-28, F77897-29

Results < IDL are shown as zero for calculation purposes
(*) Outside of QC limits
(**) Corr. sample result = Raw * (sample volume / final volume)
(anr) Analyte not requested

BLANK RESULTS SUMMARY
Part 2 - Method Blanks

Login Number: F77897
Account: TETTNOAK - Tetra Tech, Inc
Project: Holloman AFB; Alamogordo, NM

QC Batch ID: MP19492
Matrix Type: SOLID

Methods: SW846 6010C
Units: mg/kg

Prep Date: 11/17/10

Metal	RL	IDL	MDL	MB raw	final
Aluminum	10	1	1.2		
Antimony	1.0	.05	.1		
Arsenic	0.50	.05	.1	-0.025	<0.50
Barium	10	.05	.5	-0.12	<10
Beryllium	0.25	.005	.05		
Cadmium	0.20	.005	.05	0.0	<0.20
Calcium	250	2.5	5		
Chromium	0.50	.05	.05	0.060	<0.50
Cobalt	2.5	.05	.05		
Copper	1.3	.05	.1		
Iron	15	1.7	1.7		
Lead	1.0	.05	.05	0.090	<1.0
Magnesium	250	2.5	5		
Manganese	0.75	.05	.05		
Molybdenum	2.5	.05	.05		
Nickel	2.0	.05	.05		
Potassium	500	2.5	25		
Selenium	1.0	.1	.2	0.17	<1.0
Silver	0.50	.05	.05	-0.010	<0.50
Sodium	500	38	55		
Strontium	0.50	.05	.05		
Thallium	0.50	.05	.13		
Tin	2.5	.05	.05		
Titanium	0.50	.055	.1		
Vanadium	2.5	.05	.05		
Zinc	1.0	.05	.25		

Associated samples MP19492: F77897-30, F77897-31, F77897-32, F77897-33, F77897-36, F77897-37, F77897-38

Results < IDL are shown as zero for calculation purposes
(*) Outside of QC limits
(anr) Analyte not requested

MATRIX SPIKE AND DUPLICATE RESULTS SUMMARY

Login Number: F77897
Account: TETTNOAK - Tetra Tech, Inc
Project: Holloman AFB; Alamogordo, NM

QC Batch ID: MP19492
Matrix Type: SOLID

Methods: SW846 6010C
Units: mg/kg

Metal	F77904-1 Original	DUP	RPD	QC Limits	F77904-1 Original	MS	Spikelot MPFLICP1	% Rec	QC Limits
Prep Date:			11/17/10					11/17/10	
Aluminum									
Antimony									
Arsenic	1.1	1.2 (a)	8.7	0-20	1.1	88.6 (a)	97.3	89.9	80-120
Barium	135	142 (a)	5.1	0-20	135	233 (a)	97.3	100.7	80-120
Beryllium									
Cadmium	0.0	0.0 (a)	NC	0-20	0.0	2.4 (a)	2.43	98.6	80-120
Calcium									
Chromium	31.7	29.2 (a)	8.2	0-20	31.7	39.6 (a)	9.73	81.2	80-120
Cobalt									
Copper									
Iron									
Lead	8.2	8.0	2.5	0-20	8.2	30.8	24.3	92.9	80-120
Magnesium									
Manganese									
Molybdenum									
Nickel									
Potassium									
Selenium	0.0	0.0 (a)	NC	0-20	0.0	89.9 (a)	97.3	92.4	80-120
Silver	0.0	0.0 (a)	NC	0-20	0.0	2.0 (a)	2.43	82.2	80-120
Sodium									
Strontium									
Thallium									
Tin									
Titanium									
Vanadium									
Zinc									

Associated samples MP19492: F77897-30, F77897-31, F77897-32, F77897-33, F77897-36, F77897-37, F77897-38

Results < IDL are shown as zero for calculation purposes
(*) Outside of QC limits
(N) Matrix Spike Rec. outside of QC limits
(anr) Analyte not requested
(a) Elevated reporting limit(s) due to matrix interference.

MATRIX SPIKE AND DUPLICATE RESULTS SUMMARY

Login Number: F77897
Account: TETTNOAK - Tetra Tech, Inc
Project: Holloman AFB; Alamogordo, NM

QC Batch ID: MP19492
Matrix Type: SOLID

Methods: SW846 6010C
Units: mg/kg

Prep Date: 11/17/10

Metal	F77904-1 Original	MSD	Spikelot MPFLICP1	% Rec	MSD RPD	QC Limit
Aluminum						
Antimony						
Arsenic	1.1	76.0 (a)	86.9	86.1	15.3	20
Barium	135	212 (a)	86.9	88.6	9.4	20
Beryllium						
Cadmium	0.0	2.0 (a)	2.17	92.0	18.2	20
Calcium						
Chromium	31.7	38.1 (a)	8.69	73.6N(b)	3.9	20
Cobalt						
Copper						
Iron						
Lead	8.2	27.8	21.7	90.2	10.2	20
Magnesium						
Manganese						
Molybdenum						
Nickel						
Potassium						
Selenium	0.0	77.5 (a)	86.9	89.1	14.8	20
Silver	0.0	1.7 (a)	2.17	78.2N(b)	16.2	20
Sodium						
Strontium						
Thallium						
Tin						
Titanium						
Vanadium						
Zinc						

Associated samples MP19492: F77897-30, F77897-31, F77897-32, F77897-33, F77897-36, F77897-37, F77897-38

Results < IDL are shown as zero for calculation purposes
(*) Outside of QC limits
(N) Matrix Spike Rec. outside of QC limits
(anr) Analyte not requested
(a) Elevated reporting limit(s) due to matrix interference.
(b) Spike recovery indicates possible matrix interference and/or sample nonhomogeneity.

SPIKE BLANK AND LAB CONTROL SAMPLE SUMMARY

Login Number: F77897
Account: TETTNOAK - Tetra Tech, Inc
Project: Holloman AFB; Alamogordo, NM

QC Batch ID: MP19492
Matrix Type: SOLID

Methods: SW846 6010C
Units: mg/kg

Prep Date: 11/17/10

Metal	BSP Result	Spikelot MPFLICP1	% Rec	QC Limits
Aluminum				
Antimony				
Arsenic	98.1	100	98.1	80-120
Barium	108	100	108.0	80-120
Beryllium				
Cadmium	2.6	2.5	104.0	80-120
Calcium				
Chromium	11.0	10	110.0	80-120
Cobalt				
Copper				
Iron				
Lead	24.4	25	97.6	80-120
Magnesium				
Manganese				
Molybdenum				
Nickel				
Potassium				
Selenium	97.4	100	97.4	80-120
Silver	2.4	2.5	96.0	80-120
Sodium				
Strontium				
Thallium				
Tin				
Titanium				
Vanadium				
Zinc				

Associated samples MP19492: F77897-30, F77897-31, F77897-32, F77897-33, F77897-36, F77897-37, F77897-38

Results < IDL are shown as zero for calculation purposes
(*) Outside of QC limits
(anr) Analyte not requested

SERIAL DILUTION RESULTS SUMMARY

Login Number: F77897
Account: TETTNOAK - Tetra Tech, Inc
Project: Holloman AFB; Alamogordo, NM

QC Batch ID: MP19492
Matrix Type: SOLID

Methods: SW846 6010C
Units: ug/l

Prep Date: 11/17/10

Metal	F77904-1 Original	SDL 10:5	%DIF	QC Limits
Aluminum				
Antimony				
Arsenic	27.3	0.00	100.0(a)	0-10
Barium	3440	3790	10.5*(b)	0-10
Beryllium				
Cadmium	0.00	0.00	NC	0-10
Calcium				
Chromium	806	900	11.7*(b)	0-10
Cobalt				
Copper				
Iron				
Lead	210	213	1.7	0-10
Magnesium				
Manganese				
Molybdenum				
Nickel				
Potassium				
Selenium	0.00	106		0-10
Silver	0.00	0.00	NC	0-10
Sodium				
Strontium				
Thallium				
Tin				
Titanium				
Vanadium				
Zinc				

Associated samples MP19492: F77897-30, F77897-31, F77897-32, F77897-33, F77897-36, F77897-37, F77897-38

Results < IDL are shown as zero for calculation purposes
(*) Outside of QC limits
(anr) Analyte not requested
(a) Percent difference acceptable due to low initial sample concentration (< 50 times IDL).
(b) Serial dilution indicates possible matrix interference.

POST DIGESTATE SPIKE SUMMARY

Login Number: F77897
Account: TETTNOAK - Tetra Tech, Inc
Project: Holloman AFB; Alamogordo, NM

QC Batch ID: MP19492
Matrix Type: SOLID

Methods: SW846 6010C
Units: ug/l

Prep Date: 11/17/10

Metal	Sample ml	Final ml	F77904-1 Raw	Corr.**	PS ug/l	Spike ml	Spike ug/ml	Spike ug/l	% Rec	QC Limits
Aluminum										
Antimony										
Arsenic										
Barium	9.8	10	3435	3366.3	3641	0.2	12.5	250	109.9	80-120
Beryllium										
Cadmium										
Calcium										
Chromium	9.8	10	806	789.88	856	0.2	2.5	50	132.2*(a	80-120
Cobalt										
Copper										
Iron										
Lead										
Magnesium										
Manganese										
Molybdenum										
Nickel										
Potassium										
Selenium										
Silver										
Sodium										
Strontium										
Thallium										
Tin										
Titanium										
Vanadium										
Zinc										

Associated samples MP19492: F77897-30, F77897-31, F77897-32, F77897-33, F77897-36, F77897-37, F77897-38

Results < IDL are shown as zero for calculation purposes
(*) Outside of QC limits
(**) Corr. sample result = Raw * (sample volume / final volume)
(anr) Analyte not requested
(a) Spike recovery indicates matrix interference and/or outside control limits due to high level in sample relative to spike amount.

BLANK RESULTS SUMMARY
Part 2 - Method Blanks

Login Number: F77897
Account: TETTNOAK - Tetra Tech, Inc
Project: Holloman AFB; Alamogordo, NM

QC Batch ID: MP19500
Matrix Type: SOLID

Methods: SW846 7471B
Units: mg/kg

Prep Date: 11/18/10

Metal	RL	IDL	MDL	MB raw	final
Mercury	0.083	.0059	.0083	0.0098	<0.083

Associated samples MP19500: F77897-36, F77897-37, F77897-38

Results < IDL are shown as zero for calculation purposes
(*) Outside of QC limits
(anr) Analyte not requested

MATRIX SPIKE AND DUPLICATE RESULTS SUMMARY

Login Number: F77897
Account: TETTNOAK - Tetra Tech, Inc
Project: Holloman AFB; Alamogordo, NM

QC Batch ID: MP19500
Matrix Type: SOLID

Methods: SW846 7471B
Units: mg/kg

Prep Date:			11/18/10					11/18/10	
Metal	F77969-2 Original	DUP	RPD	QC Limits	F77969-2 Original	MS	Spikelot HGFLWS1	% Rec	QC Limits
Mercury	0.016	0.015	6.5	0-20	0.016	0.34	0.282	114.9	80-120

Associated samples MP19500: F77897-36, F77897-37, F77897-38

Results < IDL are shown as zero for calculation purposes
(*) Outside of QC limits
(N) Matrix Spike Rec. outside of QC limits
(anr) Analyte not requested

MATRIX SPIKE AND DUPLICATE RESULTS SUMMARY

Login Number: F77897
Account: TETTNOAK - Tetra Tech, Inc
Project: Holloman AFB; Alamogordo, NM

QC Batch ID: MP19500
Matrix Type: SOLID

Methods: SW846 7471B
Units: mg/kg

Prep Date: 11/18/10

Metal	F77969-2 Original	MSD	Spikelot HGFLWS1	% Rec	MSD RPD	QC Limit
Mercury	0.016	0.33	0.296	106.0	3.0	20

Associated samples MP19500: F77897-36, F77897-37, F77897-38

Results < IDL are shown as zero for calculation purposes
(*) Outside of QC limits
(N) Matrix Spike Rec. outside of QC limits
(anr) Analyte not requested

SPIKE BLANK AND LAB CONTROL SAMPLE SUMMARY

Login Number: F77897
Account: TETTNOAK - Tetra Tech, Inc
Project: Holloman AFB; Alamogordo, NM

QC Batch ID: MP19500
Matrix Type: SOLID

Methods: SW846 7471B
Units: mg/kg

Prep Date: 11/18/10

Metal	BSP Result	Spikelot HGFLWS1	% Rec	QC Limits
Mercury	0.25	0.25	100.0	80-120

Associated samples MP19500: F77897-36, F77897-37, F77897-38

Results < IDL are shown as zero for calculation purposes
(*) Outside of QC limits
(anr) Analyte not requested

SERIAL DILUTION RESULTS SUMMARY

Login Number: F77897
Account: TETTNOAK - Tetra Tech, Inc
Project: Holloman AFB; Alamogordo, NM

QC Batch ID: MP19500
Matrix Type: SOLID

Methods: SW846 7471B
Units: ug/l

Prep Date: 11/18/10

Metal	F77969-2 Original	SDL 1:5	%DIF	QC Limits
Mercury	0.174	0.650	273.6(a)	0-10

Associated samples MP19500: F77897-36, F77897-37, F77897-38

Results < IDL are shown as zero for calculation purposes
(*) Outside of QC limits
(anr) Analyte not requested
(a) Percent difference acceptable due to low initial sample concentration (< 50 times IDL).

Southeast ACCUTEST LABORATORIES

General Chemistry

QC Data Summaries

Includes the following where applicable:

- Method Blank and Blank Spike Summaries
- Duplicate Summaries
- Matrix Spike Summaries
- Instrument Runlogs/QC
- Percent Solids Raw Data Summary

DUPLICATE RESULTS SUMMARY
GENERAL CHEMISTRY

Login Number: F77897
Account: TETTNOAK - Tetra Tech, Inc
Project: Holloman AFB; Alamogordo, NM

Analyte	Batch ID	QC Sample	Units	Original Result	DUP Result	RPD	QC Limits
Ignitability (Flashpoint)	GN42138	F77790-1	Deg. F	87	85	2.3	0-38%
Solids, Percent	GN42120	F77774-4	%	96.6	96.7	0.1	0-10%
Solids, Percent	GN42121	F77897-9	%	92.8	94.7	2.0	0-10%
Solids, Percent	GN42122	F77897-29	%	95.7	95.8	0.1	0-10%

Associated Samples:
Batch GN42120: F77897-1, F77897-2, F77897-3, F77897-4, F77897-5, F77897-6, F77897-7, F77897-8
Batch GN42121: F77897-10, F77897-11, F77897-12, F77897-13, F77897-14, F77897-15, F77897-16, F77897-17, F77897-18, F77897-19, F77897-20, F77897-21, F77897-22, F77897-23, F77897-24, F77897-25, F77897-26, F77897-27, F77897-28, F77897-9
Batch GN42122: F77897-29, F77897-30, F77897-31, F77897-32, F77897-33, F77897-36, F77897-37, F77897-38, F77897-42
Batch GN42138: F77897-42
(*) Outside of QC limits

Percent Solids Raw Data Summary

Job Number: F77897
Account: TETTNOAK Tetra Tech, Inc
Project: Holloman AFB; Alamogordo, NM

Sample: F77897-1 **Analyzed:** 09-NOV-10 by TC **Method:** SM19 2540G
ClientID: SS39-DPT-05A

Wet Weight (Total)	6.56	g
Tare Weight	1.05	g
Dry Weight (Total)	6.37	g
Solids, Percent	96.6	%

Sample: F77897-2 **Analyzed:** 09-NOV-10 by TC **Method:** SM19 2540G
ClientID: SS39-DPT-05B

Wet Weight (Total)	7.2	g
Tare Weight	1.03	g
Dry Weight (Total)	6.77	g
Solids, Percent	93	%

Sample: F77897-3 **Analyzed:** 09-NOV-10 by TC **Method:** SM19 2540G
ClientID: SS39-DPT-05C

Wet Weight (Total)	8.77	g
Tare Weight	1.01	g
Dry Weight (Total)	7.78	g
Solids, Percent	87.2	%

Sample: F77897-4 **Analyzed:** 09-NOV-10 by TC **Method:** SM19 2540G
ClientID: SS39-DPT-06A

Wet Weight (Total)	6.08	g
Tare Weight	1.06	g
Dry Weight (Total)	5.92	g
Solids, Percent	96.8	%

Sample: F77897-5 **Analyzed:** 09-NOV-10 by TC **Method:** SM19 2540G
ClientID: SS39-DPT-06B

Wet Weight (Total)	7.57	g
Tare Weight	1.06	g
Dry Weight (Total)	6.87	g
Solids, Percent	89.2	%

Sample: F77897-6 **Analyzed:** 09-NOV-10 by TC **Method:** SM19 2540G
ClientID: SS39-DPT-06C

Wet Weight (Total)	8.99	g
Tare Weight	1.04	g
Dry Weight (Total)	8.09	g
Solids, Percent	88.7	%

Percent Solids Raw Data Summary

Job Number: F77897
Account: TETTNOAK Tetra Tech, Inc
Project: Holloman AFB; Alamogordo, NM

Sample: F77897-7 **Analyzed:** 09-NOV-10 by TC **Method:** SM19 2540G
ClientID: SS39-DPT-07A

Wet Weight (Total)	9.1	g
Tare Weight	1.03	g
Dry Weight (Total)	8.84	g
Solids, Percent	96.8	%

Sample: F77897-8 **Analyzed:** 09-NOV-10 by TC **Method:** SM19 2540G
ClientID: SS39-DPT-07B

Wet Weight (Total)	9.18	g
Tare Weight	1.06	g
Dry Weight (Total)	8.78	g
Solids, Percent	95.1	%

Sample: F77897-9 **Analyzed:** 09-NOV-10 by TC **Method:** SM19 2540G
ClientID: SS39-DPT-07C

Wet Weight (Total)	9.96	g
Tare Weight	.98	g
Dry Weight (Total)	9.31	g
Solids, Percent	92.8	%

Sample: F77897-10 **Analyzed:** 09-NOV-10 by TC **Method:** SM19 2540G
ClientID: SS39-DPT-08A

Wet Weight (Total)	6.28	g
Tare Weight	1.05	g
Dry Weight (Total)	6.09	g
Solids, Percent	96.4	%

Sample: F77897-11 **Analyzed:** 09-NOV-10 by TC **Method:** SM19 2540G
ClientID: SS39-DPT-08B

Wet Weight (Total)	6.84	g
Tare Weight	1.01	g
Dry Weight (Total)	6.53	g
Solids, Percent	94.7	%

Sample: F77897-12 **Analyzed:** 09-NOV-10 by TC **Method:** SM19 2540G
ClientID: SS39-DPT-08C

Wet Weight (Total)	8.51	g
Tare Weight	1.04	g
Dry Weight (Total)	7.75	g
Solids, Percent	89.8	%

Percent Solids Raw Data Summary

Job Number: F77897
Account: TETTNOAK Tetra Tech, Inc
Project: Holloman AFB; Alamogordo, NM

Sample: F77897-13 **Analyzed:** 09-NOV-10 by TC **Method:** SM19 2540G
ClientID: SS39-DPT-09A

Wet Weight (Total)	7.88	g
Tare Weight	1.02	g
Dry Weight (Total)	7.58	g
Solids, Percent	95.6	%

Sample: F77897-14 **Analyzed:** 09-NOV-10 by TC **Method:** SM19 2540G
ClientID: SS39-DPT-09B

Wet Weight (Total)	8.42	g
Tare Weight	.99	g
Dry Weight (Total)	7.68	g
Solids, Percent	90	%

Sample: F77897-15 **Analyzed:** 09-NOV-10 by TC **Method:** SM19 2540G
ClientID: SS39-DPT-09C

Wet Weight (Total)	7.91	g
Tare Weight	1.04	g
Dry Weight (Total)	7.45	g
Solids, Percent	93.3	%

Sample: F77897-16 **Analyzed:** 09-NOV-10 by TC **Method:** SM19 2540G
ClientID: SS39-DPT-10A

Wet Weight (Total)	7.28	g
Tare Weight	1.05	g
Dry Weight (Total)	7.1	g
Solids, Percent	97.1	%

Sample: F77897-17 **Analyzed:** 09-NOV-10 by TC **Method:** SM19 2540G
ClientID: SS39-DPT-10B

Wet Weight (Total)	8.29	g
Tare Weight	1.05	g
Dry Weight (Total)	7.63	g
Solids, Percent	90.9	%

Sample: F77897-18 **Analyzed:** 09-NOV-10 by TC **Method:** SM19 2540G
ClientID: SS39-DPT-10C

Wet Weight (Total)	8.74	g
Tare Weight	1.01	g
Dry Weight (Total)	7.96	g
Solids, Percent	89.9	%

Percent Solids Raw Data Summary

Job Number: F77897
Account: TETTNOAK Tetra Tech, Inc
Project: Holloman AFB; Alamogordo, NM

Sample: F77897-19 **Analyzed:** 09-NOV-10 by TC **Method:** SM19 2540G
ClientID: SS39-DPT-11A

Wet Weight (Total)	9.48	g
Tare Weight	1.05	g
Dry Weight (Total)	8.95	g
Solids, Percent	93.7	%

Sample: F77897-20 **Analyzed:** 09-NOV-10 by TC **Method:** SM19 2540G
ClientID: SS39-DPT-11B

Wet Weight (Total)	9.11	g
Tare Weight	1.03	g
Dry Weight (Total)	8.43	g
Solids, Percent	91.6	%

Sample: F77897-21 **Analyzed:** 09-NOV-10 by TC **Method:** SM19 2540G
ClientID: SS39-DPT-11C

Wet Weight (Total)	8.82	g
Tare Weight	1.04	g
Dry Weight (Total)	7.91	g
Solids, Percent	88.3	%

Sample: F77897-22 **Analyzed:** 09-NOV-10 by TC **Method:** SM19 2540G
ClientID: SS39-DPT-12A

Wet Weight (Total)	8.55	g
Tare Weight	1.03	g
Dry Weight (Total)	8.04	g
Solids, Percent	93.2	%

Sample: F77897-23 **Analyzed:** 09-NOV-10 by TC **Method:** SM19 2540G
ClientID: SS39-DPT-12B

Wet Weight (Total)	8.5	g
Tare Weight	1.07	g
Dry Weight (Total)	8.06	g
Solids, Percent	94.1	%

Sample: F77897-24 **Analyzed:** 09-NOV-10 by TC **Method:** SM19 2540G
ClientID: SS39-DPT-12C

Wet Weight (Total)	9.91	g
Tare Weight	1.07	g
Dry Weight (Total)	8.7	g
Solids, Percent	86.3	%

Percent Solids Raw Data Summary

Job Number: F77897
Account: TETTNOAK Tetra Tech, Inc
Project: Holloman AFB; Alamogordo, NM

Sample: F77897-25 **Analyzed:** 09-NOV-10 by TC **Method:** SM19 2540G
ClientID: SS39-DPT-13A

Wet Weight (Total)	9.35	g
Tare Weight	1.05	g
Dry Weight (Total)	8.92	g
Solids, Percent	94.8	%

Sample: F77897-26 **Analyzed:** 09-NOV-10 by TC **Method:** SM19 2540G
ClientID: SS39-DPT-13B

Wet Weight (Total)	8.36	g
Tare Weight	1	g
Dry Weight (Total)	8.15	g
Solids, Percent	97.1	%

Sample: F77897-27 **Analyzed:** 09-NOV-10 by TC **Method:** SM19 2540G
ClientID: SS39-DPT-13C

Wet Weight (Total)	9.54	g
Tare Weight	1	g
Dry Weight (Total)	8.47	g
Solids, Percent	87.5	%

Sample: F77897-28 **Analyzed:** 09-NOV-10 by TC **Method:** SM19 2540G
ClientID: SS39-DPT-14A

Wet Weight (Total)	9.3	g
Tare Weight	1.03	g
Dry Weight (Total)	8.87	g
Solids, Percent	94.8	%

Sample: F77897-29 **Analyzed:** 09-NOV-10 by TC **Method:** SM19 2540G
ClientID: SS39-DPT-14B

Wet Weight (Total)	6.3	g
Tare Weight	.98	g
Dry Weight (Total)	6.07	g
Solids, Percent	95.7	%

Sample: F77897-30 **Analyzed:** 09-NOV-10 by TC **Method:** SM19 2540G
ClientID: SS39-DPT-14C

Wet Weight (Total)	6.03	g
Tare Weight	1.03	g
Dry Weight (Total)	5.47	g
Solids, Percent	88.8	%

Percent Solids Raw Data Summary

Job Number: F77897
Account: TETTNOAK Tetra Tech, Inc
Project: Holloman AFB; Alamogordo, NM

Sample: F77897-31 **Analyzed:** 09-NOV-10 by TC **Method:** SM19 2540G
ClientID: SS39-DPT-DUP01

Wet Weight (Total)	9.05	g
Tare Weight	1.06	g
Dry Weight (Total)	8.42	g
Solids, Percent	92.1	%

Sample: F77897-32 **Analyzed:** 09-NOV-10 by TC **Method:** SM19 2540G
ClientID: SS39-DPT-DUP02

Wet Weight (Total)	8.01	g
Tare Weight	1.03	g
Dry Weight (Total)	7.28	g
Solids, Percent	89.5	%

Sample: F77897-33 **Analyzed:** 09-NOV-10 by TC **Method:** SM19 2540G
ClientID: SS39-DPT-DUP03

Wet Weight (Total)	7.29	g
Tare Weight	1.05	g
Dry Weight (Total)	6.98	g
Solids, Percent	95	%

Sample: F77897-36 **Analyzed:** 09-NOV-10 by TC **Method:** SM19 2540G
ClientID: SD27-DPT-13A

Wet Weight (Total)	8.43	g
Tare Weight	1	g
Dry Weight (Total)	7.37	g
Solids, Percent	85.7	%

Sample: F77897-37 **Analyzed:** 09-NOV-10 by TC **Method:** SM19 2540G
ClientID: SD27-DPT-13B

Wet Weight (Total)	8.99	g
Tare Weight	1.01	g
Dry Weight (Total)	7.66	g
Solids, Percent	83.3	%

Sample: F77897-38 **Analyzed:** 09-NOV-10 by TC **Method:** SM19 2540G
ClientID: SD27-DPT-13C

Wet Weight (Total)	9.6	g
Tare Weight	1.04	g
Dry Weight (Total)	8.63	g
Solids, Percent	88.7	%

Percent Solids Raw Data Summary

Job Number: F77897
Account: TETTNOAK Tetra Tech, Inc
Project: Holloman AFB; Alamogordo, NM

Sample: F77897-42 **Analyzed:** 09-NOV-10 by TC **Method:** SM19 2540G
ClientID: SS39-IGN

Wet Weight (Total)	8.9	g
Tare Weight	1.07	g
Dry Weight (Total)	8.26	g
Solids, Percent	91.8	%

Southeast ACCUTEST LABORATORIES

11/27/10

Technical Report for

Tetra Tech, Inc

Holloman AFB; Alamogordo, NM

100-TEN-T93002-1

Accutest Job Number: F77899

Sampling Date: 11/08/10

Report to:

Tetra Tech
800 Oak Ridge Tpk. Suite A600
Oak Ridge, TN 37830
Jeremy.Bennett@tetratech.com

ATTN: Jeremy Bennett

Total number of pages in report: **355**

ACCREDITED IN ACCORDANCE WITH nelac

Test results contained within this data package meet the requirements of the National Environmental Laboratory Accreditation Conference and/or state specific certification programs as applicable.

Harry Behzadi, Ph.D.
Laboratory Director

Client Service contact: Sue Bell 407-425-6700

Certifications: FL (DOH E83510), NC (573), NJ (FL002), MA (FL946), IA (366), LA (03051), KS (E-10327), SC, AK

This report shall not be reproduced, except in its entirety, without the written approval of Accutest Laboratories.
Test results relate only to samples analyzed.

Accutest Laboratories is the sole authority for authorizing edits or modifications to this document. Unauthorized modification of this report is strictly prohibited.

Table of Contents

-1-

Section 1: Sample Summary **4**
Section 2: Case Narrative/Conformance Summary **6**
Section 3: Sample Results **10**
3.1: F77899-1: SS39-DPT-01A 11
3.2: F77899-2: SS39-DPT-01B 16
3.3: F77899-3: SS39-DPT-01C 21
3.4: F77899-4: SS39-DPT-02A 26
3.5: F77899-5: SS39-DPT-02B 31
3.6: F77899-6: SS39-DPT-02C 36
3.7: F77899-7: SS39-DPT-03A 41
3.8: F77899-8: SS39-DPT-03B 46
3.9: F77899-9: SS39-DPT-03C 51
3.10: F77899-10: SS39-DPT-04A 56
3.11: F77899-11: SS39-DPT-04B 61
3.12: F77899-12: SS39-DPT-04C 66
3.13: F77899-13: SS39-DPT-15A 71
3.14: F77899-14: SS39-DPT-15B 77
3.15: F77899-15: SS39-DPT-15C 83
3.16: F77899-16: SS39-DPT-16A 89
3.17: F77899-17: SS39-DPT-16B 95
3.18: F77899-18: SS39-DPT-16C 101
3.19: F77899-19: SS39-DPT-DUP04 107
3.20: F77899-20: SS39-DPT-DUP05 113
3.21: F77899-21: SS39-TB-11082010-B 119
3.22: F77899-22: SS39-TB-11082010-C 123
Section 4: Misc. Forms **127**
4.1: Chain of Custody 128
Section 5: GC/MS Volatiles - QC Data Summaries **130**
5.1: Method Blank Summary 131
5.2: Blank Spike Summary 140
5.3: Matrix Spike/Matrix Spike Duplicate Summary 149
5.4: Instrument Performance Checks (BFB) 158
5.5: Internal Standard Area Summaries 163
5.6: Surrogate Recovery Summaries 166
5.7: Initial and Continuing Calibration Summaries 168
Section 6: GC Volatiles - QC Data Summaries **189**
6.1: Method Blank Summary 190
6.2: Blank Spike Summary 192
6.3: Matrix Spike/Matrix Spike Duplicate Summary 194
6.4: Surrogate Recovery Summaries 196
6.5: GC Surrogate Retention Time Summaries 197
6.6: Initial and Continuing Calibration Summaries 201

Table of Contents

Section 7: GC Semi-volatiles - QC Data Summaries 209
7.1: Method Blank Summary 210
7.2: Blank Spike Summary 213
7.3: Matrix Spike/Matrix Spike Duplicate Summary 215
7.4: Surrogate Recovery Summaries 217
7.5: GC Surrogate Retention Time Summaries 218
7.6: Initial and Continuing Calibration Summaries 224
Section 8: Metals Analysis - QC Data Summaries 234
8.1: Inst QC MA8502: As,Ba,Cd,Cr,Pb,Se,Ag 235
8.2: Inst QC MA8504: As,Ba,Cd,Cr,Pb,Se,Ag 269
8.3: Inst QC MA8509: Cr,Se 298
8.4: Inst QC MA8518: Hg 325
8.5: Prep QC MP19447: As,Ba,Cd,Cr,Pb,Se,Ag 335
8.6: Prep QC MP19456: As,Ba,Cd,Cr,Pb,Se,Ag 341
8.7: Prep QC MP19500: Hg 346
Section 9: General Chemistry - QC Data Summaries 351
9.1: Percent Solids Raw Data Summary 352

Sample Summary

Tetra Tech, Inc

Job No: F77899

Holloman AFB; Alamogordo, NM
Project No: 100-TEN-T93002-1

Sample Number	Collected Date	Time	By	Received	Matrix Code	Type	Client Sample ID
F77899-1	11/08/10	13:20	JM	11/09/10	SO	Soil	SS39-DPT-01A
F77899-2	11/08/10	13:30	JM	11/09/10	SO	Soil	SS39-DPT-01B
F77899-3	11/08/10	13:45	JM	11/09/10	SO	Soil	SS39-DPT-01C
F77899-3D	11/08/10	13:45	JM	11/09/10	SO	Soil Dup/MSD	SS39-DPT-01C
F77899-3S	11/08/10	13:45	JM	11/09/10	SO	Soil Matrix Spike	SS39-DPT-01C
F77899-4	11/08/10	12:15	JM	11/09/10	SO	Soil	SS39-DPT-02A
F77899-5	11/08/10	12:15	JM	11/09/10	SO	Soil	SS39-DPT-02B
F77899-6	11/08/10	13:05	JM	11/09/10	SO	Soil	SS39-DPT-02C
F77899-7	11/08/10	11:40	JM	11/09/10	SO	Soil	SS39-DPT-03A
F77899-8	11/08/10	11:45	JM	11/09/10	SO	Soil	SS39-DPT-03B
F77899-9	11/08/10	11:50	JM	11/09/10	SO	Soil	SS39-DPT-03C
F77899-10	11/08/10	11:00	JM	11/09/10	SO	Soil	SS39-DPT-04A
F77899-11	11/08/10	11:10	JM	11/09/10	SO	Soil	SS39-DPT-04B

Soil samples reported on a dry weight basis unless otherwise indicated on result page.

Sample Summary
(continued)

Tetra Tech, Inc

Job No: F77899

Holloman AFB; Alamogordo, NM
Project No: 100-TEN-T93002-1

Sample Number	Collected Date	Time	By	Received	Matrix Code	Type	Client Sample ID
F77899-12	11/08/10	11:25	JM	11/09/10	SO	Soil	SS39-DPT-04C
F77899-13	11/08/10	09:20	JM	11/09/10	SO	Soil	SS39-DPT-15A
F77899-14	11/08/10	09:35	JM	11/09/10	SO	Soil	SS39-DPT-15B
F77899-15	11/08/10	09:50	JM	11/09/10	SO	Soil	SS39-DPT-15C
F77899-16	11/08/10	10:15	JM	11/09/10	SO	Soil	SS39-DPT-16A
F77899-17	11/08/10	10:20	JM	11/09/10	SO	Soil	SS39-DPT-16B
F77899-18	11/08/10	10:30	JM	11/09/10	SO	Soil	SS39-DPT-16C
F77899-19	11/08/10	11:50	JM	11/09/10	SO	Soil	SS39-DPT-DUP04
F77899-20	11/08/10	13:20	JM	11/09/10	SO	Soil	SS39-DPT-DUP05
F77899-21	11/08/10	15:15	JM	11/09/10	SO	Trip Blank Soil	SS39-TB-11082010-B
F77899-22	11/08/10	15:15	JM	11/09/10	SO	Trip Blank Soil	SS39-TB-11082010-C

Soil samples reported on a dry weight basis unless otherwise indicated on result page.

SAMPLE DELIVERY GROUP CASE NARRATIVE

Client: Tetra Tech, Inc **Job** F77899

Site: Holloman AFB; Alamogordo, NM **Report Date:** 11/23/2010 9:19:00 AM

20 Samples and 2 Trip Blanks were collected on 11/08/2010 and were received at Accutest SE on 11/09/2010 properly preserved, at 3.6 Deg. C and intact. These Samples received an Accutest job number of F77899. A listing of the Laboratory Sample ID, Client Sample ID and dates of collection are presented in the Results Summary Section of this report.

Except as noted below, all method specified calibrations and quality control performance criteria were met for this job. For more information, please refer to QC summary pages.

Volatiles by GCMS by Method SW846 8260B

Matrix: SO **Batch ID:** VG2578

All samples were analyzed within the recommended method holding time.

All method blanks for this batch meet method specific criteria.

Samples F77899-3MS, F77899-3MSD were used as the QC samples indicated.

Blank Spike Recoverys for 2-Hexanone, Acetone, Methyl bromide are outside control limits.

Matrix Spike Recoverys for 1,2,3-Trichlorobenzene, 1,2,4-Trichlorobenzene, 1,2-Dibromo-3-chloropropane, 1,2-Dibromoethane, 1-Chlorohexane, 2-Hexanone, 4-Methyl-2-pentanone, Acetone, Acetonitrile, Acrylonitrile, Benzyl Chloride, Ethyl methacrylate, Methyl bromide, Methyl ethyl ketone, Propionitrile, trans-1,3-Dichloropropene, Trans-1,4-Dichloro-2-Butene are outside control limits. Probable cause due to matrix interference.

Matrix Spike Duplicate Recoverys for 1,2,4-Trichlorobenzene, 1,2-Dibromo-3-chloropropane, 1,2-Dibromoethane, 1-Chlorohexane, 2-Hexanone, 4-Methyl-2-pentanone, Acetone, Acetonitrile, Acrylonitrile, Ethyl methacrylate, Methyl bromide, Methyl ethyl ketone, Propionitrile, trans-1,3-Dichloropropene are outside control limits. Probable cause due to matrix interference.

F77899-10 for Acetone: ICV and BS outside of control limits.

F77899-6 for Methylene chloride: Suspected laboratory contaminant.

F77899-19 for Methylene chloride: Suspected laboratory contaminant.

F77899-18 for Methylene chloride: Suspected laboratory contaminant.

F77899-17 for Methylene chloride: Suspected laboratory contaminant.

F77899-2 for Methylene chloride: Suspected laboratory contaminant.

F77899-3 for Methylene chloride: Suspected laboratory contaminant.

F77899-16 for Methylene chloride: Suspected laboratory contaminant.

F77899-5 for Methylene chloride: Suspected laboratory contaminant.

F77899-7 for Methylene chloride: Suspected laboratory contaminant.

F77899-8 for Methylene chloride: Suspected laboratory contaminant.

F77899-9 for Methylene chloride: Suspected laboratory contaminant.

F77899-10 for Methylene chloride: Suspected laboratory contaminant.

F77899-11 for Methylene chloride: Suspected laboratory contaminant.

F77899-12 for Methylene chloride: Suspected laboratory contaminant.

F77899-13 for Methylene chloride: Suspected laboratory contaminant.

F77899-15 for Methylene chloride: Suspected laboratory contaminant.

F77899-4 for Methylene chloride: Suspected laboratory contaminant.

Matrix: SO **Batch ID:** VH2460

All samples were analyzed within the recommended method holding time.

All method blanks for this batch meet method specific criteria.

Samples F77991-3MS, F77991-3MSD were used as the QC samples indicated.

Blank Spike Recovery for Acetone is outside control limits.

Volatiles by GCMS by Method SW846 8260B

Matrix: SO **Batch ID:** VH2460

Matrix Spike Recoverys for 1,1,2-Trichloroethane, 1,2,3-Trichlorobenzene, 1,2,4-Trichlorobenzene, 1,2-Dibromo-3-chloropropane, 1,2-Dibromoethane, 1,3-Dichloropropane, 2-Hexanone, 4-Methyl-2-pentanone, Acetone, Acetonitrile, Benzyl Chloride, cis-1,4-Dichloro-2-Butene, Ethyl methacrylate, Methyl ethyl ketone, Methylene chloride, Naphthalene, Propionitrile, trans-1,3-Dichloropropene, Vinyl Acetate are outside control limits. Probable cause due to matrix

Matrix Spike Duplicate Recoverys for 1,1,2,2-Tetrachloroethane, 1,1,2-Trichloroethane, 1,2,3-Trichlorobenzene, 1,2,4-Trichlorobenzene, 1,2-Dibromo-3-chloropropane, 1,2-Dibromoethane, 1,3-Dichloropropane, 1-Chlorohexane, 2-Hexanone, Acetone, Benzyl Chloride, Bromoform, cis-1,4-Dichloro-2-Butene, Dibromochloromethane, Ethyl methacrylate, Hexachlorobutadiene, m-Dichlorobenzene, Methyl ethyl ketone, n-Butylbenzene, n-Propylbenzene, Naphthalene, o-Dichlorobenzene, p-Chlorotoluene, p-Dichlorobenzene, p-Isopropyltoluene, sec-Butylbenzene, Styrene, tert-Butylbenzene, trans-1,3-Dichloropropene, Vinyl Acetate are outside control limits. Probable cause due to matrix

RPDs for MSD for 1,2,4-Trimethylbenzene, 1,3,5-Trimethylbenzene, 1-Chlorohexane, 2-Chloroethyl vinyl ether, Acetone, Acetonitrile, Allyl chloride, Benzyl Chloride, Bromobenzene, Chlorobenzene, Ethylbenzene, Hexachlorobutadiene, Hexane, Isopropylbenzene, m-Dichlorobenzene, n-Butylbenzene, n-Propylbenzene, o-Chlorotoluene, o-Dichlorobenzene, o-Xylene, p-Chlorotoluene, p-Dichlorobenzene, p-Isopropyltoluene, Propionitrile, sec-Butylbenzene, Styrene, tert-Butylbenzene, Tetrachloroethylene, Toluene, Vinyl Acetate are outside control limits for sample F77991-3MSD. Probable cause due to sample non-homogeneity.

F77899-21 for Methylene chloride: Suspected laboratory contaminant.

F77899-22 for Methylene chloride: Suspected laboratory contaminant.

Matrix: SO **Batch ID:** VH2461

All samples were analyzed within the recommended method holding time.

Samples F77957-2MS, F77957-2MSD were used as the QC samples indicated.

Sample F77899-1 has compounds reported with a “B” qualifier, indicating analyte is found in the associated method blank.

Blank Spike Recoverys for Acetone, Dichlorodifluoromethane, Methyl chloride are outside control limits.

Matrix Spike Recoverys for 1,1,1,2-Tetrachloroethane, 1,1,1-Trichloroethane, 1,2,3-Trichlorobenzene, 1,2,3-Trichloropropane, 1,2,4-Trichlorobenzene, 1,2-Dibromo-3-chloropropane, 1,2-Dibromoethane, 1,2-Dichloroethane, 1,3-Dichloropropane, 1-Chlorohexane, 2,2-Dichloropropane, 2-Hexanone, Acetone, Benzyl Chloride, Bromoform, Dibromochloromethane, Ethyl methacrylate, Methyl ethyl ketone, o-Dichlorobenzene, p-Dichlorobenzene, trans-1,2-Dichloroethylene, trans-1,3-Dichloropropene, Trans-1,4-Dichloro-2-Butene are outside control limits. Probable cause due to matrix

Matrix Spike Duplicate Recoverys for 1,1,2-Trichloroethane, 1,2,3-Trichloropropane, 1,2-Dibromo-3-chloropropane, 1,2-Dibromoethane, 1,2-Dichloroethane, 1,3-Dichloropropane, 2-Hexanone, Acetone, Bromoform, Dibromochloromethane, Methyl ethyl ketone, Methyl methacrylate, trans-1,3-Dichloropropene are outside control limits. Probable cause due to matrix interference.

RPDs for MSD for 1,1,2-Trichloroethane, Methyl methacrylate are outside control limits for sample F77957-2MSD. Probable cause due to sample non-homogeneity.

F77899-1 for Methylene chloride: ICV outside of control limits. Suspected laboratory contaminant.

Volatiles by GC by Method SW846 8015C

Matrix: SO **Batch ID:** GQR2466

All samples were analyzed within the recommended method holding time.

All method blanks for this batch meet method specific criteria.

Samples F77899-1MS, F77899-1MSD were used as the QC samples indicated.

Matrix: SO **Batch ID:** GQR2467

All samples were analyzed within the recommended method holding time.

Samples F77899-3MS, F77899-3MSD were used as the QC samples indicated.

All method blanks for this batch meet method specific criteria.

Extractables by GC by Method SW846 8015C

Matrix: SO **Batch ID:** OP35013

All samples were extracted within the recommended method holding time.

All samples were analyzed within the recommended method holding time.

All method blanks for this batch meet method specific criteria.

Samples F77899-3MS, F77899-3MSD were used as the QC samples indicated.

Extractables by GC by Method SW846 8015C

Matrix: SO **Batch ID:** OP35064

All samples were extracted within the recommended method holding time.

All samples were analyzed within the recommended method holding time.

All method blanks for this batch meet method specific criteria.

Samples F78053-4MS, F78053-4MSD were used as the QC samples indicated.

Metals by Method SW846 6010C

Matrix: SO **Batch ID:** MP19447

All samples were digested within the recommended method holding time.

All samples were analyzed within the recommended method holding time.

All method blanks for this batch meet method specific criteria.

Samples F77899-13DUP, F77899-13MS, F77899-13MSD, F77899-13PS, F77899-13SDL were used as the QC samples for metals.

Matrix Spike and Matrix Spike Duplicate Recoverys for Cadmium are outside control limits. Spike recovery indicates possible matrix interference and/or sample nonhomogeneity.

RPDs for Duplicate for Lead, Silver are outside control limits for sample MP19447-D1. RPD acceptable due to low duplicate and sample concentrations.

RPDs for MSD for Arsenic, Barium, Cadmium, Chromium, Selenium, Silver are outside control limits for sample MP19447-S2. High RPD due to possible sample nonhomogeneity.

RPDs for Serial Dilution for Chromium, Lead, Silver, Barium, Cadmium are outside control limits for sample MP19447-SD1. Percent difference acceptable due to low initial sample concentration (< 50 times IDL).

MP19447-SD1 for Barium, Cadmium: Serial dilution indicates possible matrix interference.

MP19447-PS1 for Cadmium: Spike recovery indicates matrix interference and/or outside control limits due to high level in sample relative to spike amount.

F77899-14 for Lead: Elevated reporting limit(s) due to matrix interference.

F77899-15 for Selenium: Elevated reporting limit(s) due to matrix interference.

F77899-13 for Lead: Elevated reporting limit(s) due to matrix interference.

F77899-16 for Selenium: Elevated reporting limit(s) due to matrix interference.

F77899-16 for Chromium: Elevated reporting limit(s) due to matrix interference.

F77899-15 for Lead: Elevated reporting limit(s) due to matrix interference.

F77899-15 for Chromium: Elevated reporting limit(s) due to matrix interference.

F77899-16 for Lead: Elevated reporting limit(s) due to matrix interference.

F77899-14 for Chromium: Elevated reporting limit(s) due to matrix interference.

F77899-14 for Selenium: Elevated reporting limit(s) due to matrix interference.

F77899-13 for Selenium: Elevated reporting limit(s) due to matrix interference.

F77899-13 for Chromium: Elevated reporting limit(s) due to matrix interference.

Matrix: SO **Batch ID:** MP19456

All samples were digested within the recommended method holding time.

All samples were analyzed within the recommended method holding time.

All method blanks for this batch meet method specific criteria.

Samples F77915-1DUP, F77915-1MS, F77915-1MSD, F77915-1SDL were used as the QC samples for metals.

RPDs for Duplicate for Cadmium, Selenium are outside control limits for sample MP19456-D1. RPD acceptable due to low duplicate and sample concentrations.

RPDs for Serial Dilution for Barium, Cadmium, Chromium, Lead are outside control limits for sample MP19456-SD1. Percent difference acceptable due to low initial sample concentration (< 50 times IDL).

F77899-19 for Selenium: Elevated reporting limit(s) due to matrix interference.

F77899-19 for Chromium: Elevated reporting limit(s) due to matrix interference.

F77899-18 for Selenium: Elevated reporting limit(s) due to matrix interference.

F77899-18 for Chromium: Elevated reporting limit(s) due to matrix interference.

F77899-17 for Selenium: Elevated reporting limit(s) due to matrix interference.

F77899-17 for Chromium: Elevated reporting limit(s) due to matrix interference.

F77899-20 for Selenium: Elevated reporting limit(s) due to matrix interference.

F77899-20 for Chromium: Elevated reporting limit(s) due to matrix interference.

Metals by Method SW846 7471B

Matrix: SO **Batch ID:** MP19500

All samples were digested within the recommended method holding time.

All samples were analyzed within the recommended method holding time.

All method blanks for this batch meet method specific criteria.

Samples F77969-2DUP, F77969-2MS, F77969-2MSD, F77969-2SDL were used as the QC samples for metals.

RPD for Serial Dilution for Mercury is outside control limits for sample MP19500-SD1. Percent difference acceptable due to low initial sample concentration (< 50 times IDL).

Wet Chemistry by Method SM19 2540G

Matrix: SO **Batch ID:** GN42123

Sample F77899-1DUP was used as the QC sample for Solids, Percent.

Accutest Laboratories Southeast (ALSE) certifies that this report meets the project requirements for analytical data produced for the samples as received at ALSE and as stated on the COC. ALSE certifies that the data meets the Data Quality Objectives for precision, accuracy and completeness as specified in the ALSE Quality Manual except as noted above. This report is to be used in its entirety. ALSE is not responsible for any assumptions of data quality if partial data packages are used.

Narrative prepared by:

_____ Date: November 23, 2010

Ellen Pampel, Inorganic QA (signature on file)

Tuesday, November 23, 2010

Southeast ACCUTEST LABORATORIES

Sample Results

Report of Analysis

Report of Analysis

Client Sample ID:	SS39-DPT-01A		
Lab Sample ID:	F77899-1	**Date Sampled:**	11/08/10
Matrix:	SO - Soil	**Date Received:**	11/09/10
Method:	SW846 8260B	**Percent Solids:**	74.8
Project:	Holloman AFB; Alamogordo, NM		

	File ID	DF	Analyzed	By	Prep Date	Prep Batch	Analytical Batch
Run #1	H066068.D	1	11/16/10	MM	n/a	n/a	VH2461
Run #2							

	Initial Weight
Run #1	6.54 g
Run #2	

VOA Special List

CAS No.	Compound	Result	RL	MDL	Units	Q
67-64-1	Acetone	ND	51	20	ug/kg	
75-05-8	Acetonitrile	ND	51	18	ug/kg	
107-02-8	Acrolein	ND	26	11	ug/kg	
107-13-1	Acrylonitrile	ND	26	12	ug/kg	
107-05-1	Allyl chloride	ND	26	5.1	ug/kg	
71-43-2	Benzene	ND	5.1	1.5	ug/kg	
100-44-7	Benzyl Chloride	ND	5.1	1.5	ug/kg	
108-86-1	Bromobenzene	ND	5.1	1.4	ug/kg	
74-97-5	Bromochloromethane	ND	5.1	1.4	ug/kg	
75-27-4	Bromodichloromethane	ND	5.1	1.1	ug/kg	
75-25-2	Bromoform	ND	5.1	1.5	ug/kg	
104-51-8	n-Butylbenzene	ND	5.1	1.3	ug/kg	
135-98-8	sec-Butylbenzene	ND	5.1	1.6	ug/kg	
98-06-6	tert-Butylbenzene	ND	5.1	1.2	ug/kg	
108-90-7	Chlorobenzene	ND	5.1	1.0	ug/kg	
75-00-3	Chloroethane	ND	5.1	2.0	ug/kg	
67-66-3	Chloroform	ND	5.1	1.2	ug/kg	
544-10-5	1-Chlorohexane	ND	5.1	1.4	ug/kg	
95-49-8	o-Chlorotoluene	ND	5.1	1.2	ug/kg	
106-43-4	p-Chlorotoluene	ND	5.1	1.2	ug/kg	
110-75-8	2-Chloroethyl vinyl ether	ND	26	10	ug/kg	
75-15-0	Carbon disulfide	ND	5.1	2.0	ug/kg	
56-23-5	Carbon tetrachloride	ND	5.1	1.8	ug/kg	
75-34-3	1,1-Dichloroethane	ND	5.1	1.1	ug/kg	
75-35-4	1,1-Dichloroethylene	ND	5.1	1.4	ug/kg	
563-58-6	1,1-Dichloropropene	ND	5.1	1.3	ug/kg	
96-12-8	1,2-Dibromo-3-chloropropane	ND	5.1	2.4	ug/kg	
106-93-4	1,2-Dibromoethane	ND	5.1	1.0	ug/kg	
107-06-2	1,2-Dichloroethane	ND	5.1	1.0	ug/kg	
78-87-5	1,2-Dichloropropane	ND	5.1	1.2	ug/kg	
142-28-9	1,3-Dichloropropane	ND	5.1	1.0	ug/kg	
594-20-7	2,2-Dichloropropane	ND	5.1	1.4	ug/kg	

ND = Not detected MDL - Method Detection Limit
RL = Reporting Limit
E = Indicates value exceeds calibration range

J = Indicates an estimated value
B = Indicates analyte found in associated method blank
N = Indicates presumptive evidence of a compound

Report of Analysis

Client Sample ID:	SS39-DPT-01A		
Lab Sample ID:	F77899-1	**Date Sampled:**	11/08/10
Matrix:	SO - Soil	**Date Received:**	11/09/10
Method:	SW846 8260B	**Percent Solids:**	74.8
Project:	Holloman AFB; Alamogordo, NM		

VOA Special List

CAS No.	Compound	Result	RL	MDL	Units	Q
124-48-1	Dibromochloromethane	ND	5.1	1.0	ug/kg	
75-71-8	Dichlorodifluoromethane	ND	5.1	1.5	ug/kg	
156-59-2	cis-1,2-Dichloroethylene	ND	5.1	1.5	ug/kg	
10061-01-5	cis-1,3-Dichloropropene	ND	5.1	1.0	ug/kg	
1476-11-5	cis-1,4-Dichloro-2-Butene	ND	26	5.1	ug/kg	
541-73-1	m-Dichlorobenzene	ND	5.1	1.2	ug/kg	
95-50-1	o-Dichlorobenzene	ND	5.1	1.1	ug/kg	
106-46-7	p-Dichlorobenzene	ND	5.1	1.1	ug/kg	
156-60-5	trans-1,2-Dichloroethylene	ND	5.1	1.5	ug/kg	
10061-02-6	trans-1,3-Dichloropropene	ND	5.1	1.1	ug/kg	
100-41-4	Ethylbenzene	ND	5.1	1.0	ug/kg	
97-63-2	Ethyl methacrylate	ND	26	5.1	ug/kg	
76-13-1	Freon 113	ND	5.1	1.7	ug/kg	
591-78-6	2-Hexanone	ND	26	5.5	ug/kg	
87-68-3	Hexachlorobutadiene	ND	5.1	2.0	ug/kg	
110-54-3	Hexane	ND	5.1	1.9	ug/kg	
98-82-8	Isopropylbenzene	ND	5.1	1.1	ug/kg	
99-87-6	p-Isopropyltoluene	ND	5.1	1.2	ug/kg	
108-10-1	4-Methyl-2-pentanone	ND	26	5.6	ug/kg	
126-98-7	Methacrylonitrile	ND	26	9.4	ug/kg	
74-83-9	Methyl bromide	ND	5.1	2.0	ug/kg	
74-87-3	Methyl chloride	ND	5.1	2.0	ug/kg	
74-88-4	Methyl iodide	ND	10	1.1	ug/kg	
80-62-6	Methyl methacrylate	ND	5.1	1.8	ug/kg	
74-95-3	Methylene bromide	ND	5.1	1.5	ug/kg	
75-09-2	Methylene chloride [a]	7.9	10	4.7	ug/kg	JB
78-93-3	Methyl ethyl ketone	ND	26	6.2	ug/kg	
1634-04-4	Methyl Tert Butyl Ether	ND	5.1	2.0	ug/kg	
91-20-3	Naphthalene	ND	5.1	2.0	ug/kg	
76-01-7	Pentachloroethane	ND	26	5.1	ug/kg	
107-12-0	Propionitrile	ND	51	16	ug/kg	
103-65-1	n-Propylbenzene	ND	5.1	1.4	ug/kg	
100-42-5	Styrene	ND	5.1	2.7	ug/kg	
630-20-6	1,1,1,2-Tetrachloroethane	ND	5.1	1.0	ug/kg	
71-55-6	1,1,1-Trichloroethane	ND	5.1	1.1	ug/kg	
79-34-5	1,1,2,2-Tetrachloroethane	ND	5.1	1.2	ug/kg	
79-00-5	1,1,2-Trichloroethane	ND	5.1	1.1	ug/kg	
87-61-6	1,2,3-Trichlorobenzene	ND	5.1	1.0	ug/kg	
96-18-4	1,2,3-Trichloropropane	ND	5.1	1.7	ug/kg	
120-82-1	1,2,4-Trichlorobenzene	ND	5.1	1.2	ug/kg	

ND = Not detected MDL - Method Detection Limit
RL = Reporting Limit
E = Indicates value exceeds calibration range

J = Indicates an estimated value
B = Indicates analyte found in associated method blank
N = Indicates presumptive evidence of a compound

Report of Analysis

Client Sample ID:	SS39-DPT-01A		
Lab Sample ID:	F77899-1	**Date Sampled:**	11/08/10
Matrix:	SO - Soil	**Date Received:**	11/09/10
Method:	SW846 8260B	**Percent Solids:**	74.8
Project:	Holloman AFB; Alamogordo, NM		

VOA Special List

CAS No.	Compound	Result	RL	MDL	Units	Q
95-63-6	1,2,4-Trimethylbenzene	ND	5.1	1.1	ug/kg	
108-67-8	1,3,5-Trimethylbenzene	ND	5.1	1.3	ug/kg	
127-18-4	Tetrachloroethylene	ND	5.1	1.0	ug/kg	
108-88-3	Toluene	ND	5.1	1.2	ug/kg	
79-01-6	Trichloroethylene	ND	5.1	1.2	ug/kg	
75-69-4	Trichlorofluoromethane	ND	5.1	2.0	ug/kg	
110-57-6	Trans-1,4-Dichloro-2-Butene	ND	26	5.1	ug/kg	
75-01-4	Vinyl chloride	ND	5.1	1.5	ug/kg	
108-05-4	Vinyl Acetate	ND	26	14	ug/kg	
	m,p-Xylene	ND	10	2.2	ug/kg	
95-47-6	o-Xylene	ND	5.1	1.0	ug/kg	

CAS No.	Surrogate Recoveries	Run# 1	Run# 2	Limits
1868-53-7	Dibromofluoromethane	107%		80-121%
2037-26-5	Toluene-D8	78%		71-130%
460-00-4	4-Bromofluorobenzene	99%		59-148%
17060-07-0	1,2-Dichloroethane-D4	107%		77-123%

(a) ICV outside of control limits. Suspected laboratory contaminant.

ND = Not detected MDL - Method Detection Limit
RL = Reporting Limit
E = Indicates value exceeds calibration range

J = Indicates an estimated value
B = Indicates analyte found in associated method blank
N = Indicates presumptive evidence of a compound

Report of Analysis

Client Sample ID:	SS39-DPT-01A		
Lab Sample ID:	F77899-1	**Date Sampled:**	11/08/10
Matrix:	SO - Soil	**Date Received:**	11/09/10
Method:	SW846 8015C	**Percent Solids:**	74.8
Project:	Holloman AFB; Alamogordo, NM		

	File ID	DF	Analyzed	By	Prep Date	Prep Batch	Analytical Batch
Run #1	QR056643.D	1	11/12/10	AH	n/a	n/a	GQR2466
Run #2							

	Initial Weight	Final Volume	Methanol Aliquot
Run #1	5.38 g	5.0 ml	100 ul
Run #2			

CAS No.	Compound	Result	RL	MDL	Units	Q
	TPH-GRO (C6-C10)	ND	7.9	3.9	mg/kg	

CAS No.	Surrogate Recoveries	Run# 1	Run# 2	Limits
460-00-4	4-Bromofluorobenzene	89%		56-136%
98-08-8	aaa-Trifluorotoluene	80%		61-121%

ND = Not detected MDL - Method Detection Limit
RL = Reporting Limit
E = Indicates value exceeds calibration range

J = Indicates an estimated value
B = Indicates analyte found in associated method blank
N = Indicates presumptive evidence of a compound

Report of Analysis

Client Sample ID:	SS39-DPT-01A		
Lab Sample ID:	F77899-1	**Date Sampled:**	11/08/10
Matrix:	SO - Soil	**Date Received:**	11/09/10
Method:	SW846 8015C SW846 3550C	**Percent Solids:**	74.8
Project:	Holloman AFB; Alamogordo, NM		

	File ID	DF	Analyzed	By	Prep Date	Prep Batch	Analytical Batch
Run #1	YY18790.D	1	11/20/10	MV	11/11/10	OP35013	GYY677
Run #2							

	Initial Weight	Final Volume
Run #1	30.4 g	1.0 ml
Run #2		

CAS No.	Compound	Result	RL	MDL	Units	Q
	TPH (C10-C28)	ND	11	4.4	mg/kg	

CAS No.	Surrogate Recoveries	Run# 1	Run# 2	Limits
84-15-1	o-Terphenyl	91%		49-108%

ND = Not detected MDL - Method Detection Limit
RL = Reporting Limit
E = Indicates value exceeds calibration range

J = Indicates an estimated value
B = Indicates analyte found in associated method blank
N = Indicates presumptive evidence of a compound

Report of Analysis

Client Sample ID:	SS39-DPT-01B		
Lab Sample ID:	F77899-2	**Date Sampled:**	11/08/10
Matrix:	SO - Soil	**Date Received:**	11/09/10
Method:	SW846 8260B	**Percent Solids:**	78.1
Project:	Holloman AFB; Alamogordo, NM		

	File ID	DF	Analyzed	By	Prep Date	Prep Batch	Analytical Batch
Run #1	G0068408.D	1	11/15/10	MM	n/a	n/a	VG2578
Run #2							

	Initial Weight
Run #1	7.05 g
Run #2	

VOA Special List

CAS No.	Compound	Result	RL	MDL	Units	Q
67-64-1	Acetone	ND	45	18	ug/kg	
75-05-8	Acetonitrile	ND	45	16	ug/kg	
107-02-8	Acrolein	ND	23	10	ug/kg	
107-13-1	Acrylonitrile	ND	23	10	ug/kg	
107-05-1	Allyl chloride	ND	23	4.5	ug/kg	
71-43-2	Benzene	ND	4.5	1.4	ug/kg	
100-44-7	Benzyl Chloride	ND	4.5	1.4	ug/kg	
108-86-1	Bromobenzene	ND	4.5	1.3	ug/kg	
74-97-5	Bromochloromethane	ND	4.5	1.3	ug/kg	
75-27-4	Bromodichloromethane	ND	4.5	1.0	ug/kg	
75-25-2	Bromoform	ND	4.5	1.4	ug/kg	
104-51-8	n-Butylbenzene	ND	4.5	1.2	ug/kg	
135-98-8	sec-Butylbenzene	ND	4.5	1.5	ug/kg	
98-06-6	tert-Butylbenzene	ND	4.5	1.1	ug/kg	
108-90-7	Chlorobenzene	ND	4.5	0.91	ug/kg	
75-00-3	Chloroethane	ND	4.5	1.8	ug/kg	
67-66-3	Chloroform	ND	4.5	1.1	ug/kg	
544-10-5	1-Chlorohexane	ND	4.5	1.3	ug/kg	
95-49-8	o-Chlorotoluene	ND	4.5	1.1	ug/kg	
106-43-4	p-Chlorotoluene	ND	4.5	1.1	ug/kg	
110-75-8	2-Chloroethyl vinyl ether	ND	23	9.1	ug/kg	
75-15-0	Carbon disulfide	ND	4.5	1.8	ug/kg	
56-23-5	Carbon tetrachloride	ND	4.5	1.6	ug/kg	
75-34-3	1,1-Dichloroethane	ND	4.5	1.0	ug/kg	
75-35-4	1,1-Dichloroethylene	ND	4.5	1.3	ug/kg	
563-58-6	1,1-Dichloropropene	ND	4.5	1.2	ug/kg	
96-12-8	1,2-Dibromo-3-chloropropane	ND	4.5	2.1	ug/kg	
106-93-4	1,2-Dibromoethane	ND	4.5	0.91	ug/kg	
107-06-2	1,2-Dichloroethane	ND	4.5	0.91	ug/kg	
78-87-5	1,2-Dichloropropane	ND	4.5	1.1	ug/kg	
142-28-9	1,3-Dichloropropane	ND	4.5	0.91	ug/kg	
594-20-7	2,2-Dichloropropane	ND	4.5	1.3	ug/kg	

ND = Not detected MDL - Method Detection Limit
RL = Reporting Limit
E = Indicates value exceeds calibration range

J = Indicates an estimated value
B = Indicates analyte found in associated method blank
N = Indicates presumptive evidence of a compound

Report of Analysis

Client Sample ID:	SS39-DPT-01B		
Lab Sample ID:	F77899-2	**Date Sampled:**	11/08/10
Matrix:	SO - Soil	**Date Received:**	11/09/10
Method:	SW846 8260B	**Percent Solids:**	78.1
Project:	Holloman AFB; Alamogordo, NM		

VOA Special List

CAS No.	Compound	Result	RL	MDL	Units	Q
124-48-1	Dibromochloromethane	ND	4.5	0.91	ug/kg	
75-71-8	Dichlorodifluoromethane	ND	4.5	1.4	ug/kg	
156-59-2	cis-1,2-Dichloroethylene	ND	4.5	1.4	ug/kg	
10061-01-5	cis-1,3-Dichloropropene	ND	4.5	0.91	ug/kg	
1476-11-5	cis-1,4-Dichloro-2-Butene	ND	23	4.5	ug/kg	
541-73-1	m-Dichlorobenzene	ND	4.5	1.1	ug/kg	
95-50-1	o-Dichlorobenzene	ND	4.5	1.0	ug/kg	
106-46-7	p-Dichlorobenzene	ND	4.5	1.0	ug/kg	
156-60-5	trans-1,2-Dichloroethylene	ND	4.5	1.4	ug/kg	
10061-02-6	trans-1,3-Dichloropropene	ND	4.5	1.0	ug/kg	
100-41-4	Ethylbenzene	ND	4.5	0.91	ug/kg	
97-63-2	Ethyl methacrylate	ND	23	4.5	ug/kg	
76-13-1	Freon 113	ND	4.5	1.5	ug/kg	
591-78-6	2-Hexanone	ND	23	4.9	ug/kg	
87-68-3	Hexachlorobutadiene	ND	4.5	1.8	ug/kg	
110-54-3	Hexane	ND	4.5	1.7	ug/kg	
98-82-8	Isopropylbenzene	ND	4.5	1.0	ug/kg	
99-87-6	p-Isopropyltoluene	ND	4.5	1.1	ug/kg	
108-10-1	4-Methyl-2-pentanone	ND	23	5.0	ug/kg	
126-98-7	Methacrylonitrile	ND	23	8.4	ug/kg	
74-83-9	Methyl bromide	ND	4.5	1.8	ug/kg	
74-87-3	Methyl chloride	ND	4.5	1.8	ug/kg	
74-88-4	Methyl iodide	ND	9.1	1.0	ug/kg	
80-62-6	Methyl methacrylate	ND	4.5	1.6	ug/kg	
74-95-3	Methylene bromide	ND	4.5	1.4	ug/kg	
75-09-2	Methylene chloride [a]	9.6	9.1	4.2	ug/kg	
78-93-3	Methyl ethyl ketone	ND	23	5.5	ug/kg	
1634-04-4	Methyl Tert Butyl Ether	ND	4.5	1.8	ug/kg	
91-20-3	Naphthalene	ND	4.5	1.8	ug/kg	
76-01-7	Pentachloroethane	ND	23	4.5	ug/kg	
107-12-0	Propionitrile	ND	45	14	ug/kg	
103-65-1	n-Propylbenzene	ND	4.5	1.3	ug/kg	
100-42-5	Styrene	ND	4.5	2.4	ug/kg	
630-20-6	1,1,1,2-Tetrachloroethane	ND	4.5	0.91	ug/kg	
71-55-6	1,1,1-Trichloroethane	ND	4.5	1.0	ug/kg	
79-34-5	1,1,2,2-Tetrachloroethane	ND	4.5	1.1	ug/kg	
79-00-5	1,1,2-Trichloroethane	ND	4.5	1.0	ug/kg	
87-61-6	1,2,3-Trichlorobenzene	ND	4.5	0.91	ug/kg	
96-18-4	1,2,3-Trichloropropane	ND	4.5	1.5	ug/kg	
120-82-1	1,2,4-Trichlorobenzene	ND	4.5	1.1	ug/kg	

ND = Not detected MDL - Method Detection Limit
RL = Reporting Limit
E = Indicates value exceeds calibration range

J = Indicates an estimated value
B = Indicates analyte found in associated method blank
N = Indicates presumptive evidence of a compound

Report of Analysis

Client Sample ID:	SS39-DPT-01B		
Lab Sample ID:	F77899-2	**Date Sampled:**	11/08/10
Matrix:	SO - Soil	**Date Received:**	11/09/10
Method:	SW846 8260B	**Percent Solids:**	78.1
Project:	Holloman AFB; Alamogordo, NM		

VOA Special List

CAS No.	Compound	Result	RL	MDL	Units	Q
95-63-6	1,2,4-Trimethylbenzene	ND	4.5	1.0	ug/kg	
108-67-8	1,3,5-Trimethylbenzene	ND	4.5	1.2	ug/kg	
127-18-4	Tetrachloroethylene	ND	4.5	0.91	ug/kg	
108-88-3	Toluene	ND	4.5	1.1	ug/kg	
79-01-6	Trichloroethylene	ND	4.5	1.1	ug/kg	
75-69-4	Trichlorofluoromethane	ND	4.5	1.8	ug/kg	
110-57-6	Trans-1,4-Dichloro-2-Butene	ND	23	4.5	ug/kg	
75-01-4	Vinyl chloride	ND	4.5	1.4	ug/kg	
108-05-4	Vinyl Acetate	ND	23	13	ug/kg	
	m,p-Xylene	ND	9.1	2.0	ug/kg	
95-47-6	o-Xylene	ND	4.5	0.91	ug/kg	

CAS No.	Surrogate Recoveries	Run# 1	Run# 2	Limits
1868-53-7	Dibromofluoromethane	112%		80-121%
2037-26-5	Toluene-D8	91%		71-130%
460-00-4	4-Bromofluorobenzene	100%		59-148%
17060-07-0	1,2-Dichloroethane-D4	107%		77-123%

(a) Suspected laboratory contaminant.

ND = Not detected MDL - Method Detection Limit
RL = Reporting Limit
E = Indicates value exceeds calibration range

J = Indicates an estimated value
B = Indicates analyte found in associated method blank
N = Indicates presumptive evidence of a compound

Report of Analysis

Client Sample ID:	SS39-DPT-01B		
Lab Sample ID:	F77899-2	**Date Sampled:**	11/08/10
Matrix:	SO - Soil	**Date Received:**	11/09/10
Method:	SW846 8015C	**Percent Solids:**	78.1
Project:	Holloman AFB; Alamogordo, NM		

	File ID	DF	Analyzed	By	Prep Date	Prep Batch	Analytical Batch
Run #1	QR056644.D	1	11/12/10	AH	n/a	n/a	GQR2466
Run #2							

	Initial Weight	Final Volume	Methanol Aliquot
Run #1	6.44 g	5.0 ml	100 ul
Run #2			

CAS No.	Compound	Result	RL	MDL	Units	Q
	TPH-GRO (C6-C10)	ND	6.4	3.2	mg/kg	

CAS No.	Surrogate Recoveries	Run# 1	Run# 2	Limits
460-00-4	4-Bromofluorobenzene	89%		56-136%
98-08-8	aaa-Trifluorotoluene	84%		61-121%

ND = Not detected MDL - Method Detection Limit
RL = Reporting Limit
E = Indicates value exceeds calibration range

J = Indicates an estimated value
B = Indicates analyte found in associated method blank
N = Indicates presumptive evidence of a compound

Report of Analysis

Client Sample ID:	SS39-DPT-01B		
Lab Sample ID:	F77899-2	**Date Sampled:**	11/08/10
Matrix:	SO - Soil	**Date Received:**	11/09/10
Method:	SW846 8015C SW846 3550C	**Percent Solids:**	78.1
Project:	Holloman AFB; Alamogordo, NM		

	File ID	DF	Analyzed	By	Prep Date	Prep Batch	Analytical Batch
Run #1	YY18791.D	1	11/20/10	MV	11/11/10	OP35013	GYY677
Run #2							

	Initial Weight	Final Volume
Run #1	30.3 g	1.0 ml
Run #2		

CAS No.	Compound	Result	RL	MDL	Units	Q
	TPH (C10-C28)	ND	11	4.2	mg/kg	

CAS No.	Surrogate Recoveries	Run# 1	Run# 2	Limits
84-15-1	o-Terphenyl	94%		49-108%

ND = Not detected MDL - Method Detection Limit
RL = Reporting Limit
E = Indicates value exceeds calibration range

J = Indicates an estimated value
B = Indicates analyte found in associated method blank
N = Indicates presumptive evidence of a compound

Report of Analysis

Client Sample ID:	SS39-DPT-01C		
Lab Sample ID:	F77899-3	**Date Sampled:**	11/08/10
Matrix:	SO - Soil	**Date Received:**	11/09/10
Method:	SW846 8260B	**Percent Solids:**	83.6
Project:	Holloman AFB; Alamogordo, NM		

	File ID	DF	Analyzed	By	Prep Date	Prep Batch	Analytical Batch
Run #1	G0068409.D	1	11/15/10	MM	n/a	n/a	VG2578
Run #2							

	Initial Weight
Run #1	5.73 g
Run #2	

VOA Special List

CAS No.	Compound	Result	RL	MDL	Units	Q
67-64-1	Acetone	ND	52	21	ug/kg	
75-05-8	Acetonitrile	ND	52	19	ug/kg	
107-02-8	Acrolein	ND	26	11	ug/kg	
107-13-1	Acrylonitrile	ND	26	12	ug/kg	
107-05-1	Allyl chloride	ND	26	5.2	ug/kg	
71-43-2	Benzene	ND	5.2	1.6	ug/kg	
100-44-7	Benzyl Chloride	ND	5.2	1.6	ug/kg	
108-86-1	Bromobenzene	ND	5.2	1.5	ug/kg	
74-97-5	Bromochloromethane	ND	5.2	1.5	ug/kg	
75-27-4	Bromodichloromethane	ND	5.2	1.1	ug/kg	
75-25-2	Bromoform	ND	5.2	1.6	ug/kg	
104-51-8	n-Butylbenzene	ND	5.2	1.4	ug/kg	
135-98-8	sec-Butylbenzene	ND	5.2	1.7	ug/kg	
98-06-6	tert-Butylbenzene	ND	5.2	1.3	ug/kg	
108-90-7	Chlorobenzene	ND	5.2	1.0	ug/kg	
75-00-3	Chloroethane	ND	5.2	2.1	ug/kg	
67-66-3	Chloroform	ND	5.2	1.3	ug/kg	
544-10-5	1-Chlorohexane	ND	5.2	1.5	ug/kg	
95-49-8	o-Chlorotoluene	ND	5.2	1.3	ug/kg	
106-43-4	p-Chlorotoluene	ND	5.2	1.3	ug/kg	
110-75-8	2-Chloroethyl vinyl ether	ND	26	10	ug/kg	
75-15-0	Carbon disulfide	ND	5.2	2.1	ug/kg	
56-23-5	Carbon tetrachloride	ND	5.2	1.9	ug/kg	
75-34-3	1,1-Dichloroethane	ND	5.2	1.1	ug/kg	
75-35-4	1,1-Dichloroethylene	ND	5.2	1.5	ug/kg	
563-58-6	1,1-Dichloropropene	ND	5.2	1.4	ug/kg	
96-12-8	1,2-Dibromo-3-chloropropane	ND	5.2	2.4	ug/kg	
106-93-4	1,2-Dibromoethane	ND	5.2	1.0	ug/kg	
107-06-2	1,2-Dichloroethane	ND	5.2	1.0	ug/kg	
78-87-5	1,2-Dichloropropane	ND	5.2	1.3	ug/kg	
142-28-9	1,3-Dichloropropane	ND	5.2	1.0	ug/kg	
594-20-7	2,2-Dichloropropane	ND	5.2	1.5	ug/kg	

ND = Not detected MDL - Method Detection Limit
RL = Reporting Limit
E = Indicates value exceeds calibration range

J = Indicates an estimated value
B = Indicates analyte found in associated method blank
N = Indicates presumptive evidence of a compound

Report of Analysis

Client Sample ID:	SS39-DPT-01C		
Lab Sample ID:	F77899-3	**Date Sampled:**	11/08/10
Matrix:	SO - Soil	**Date Received:**	11/09/10
Method:	SW846 8260B	**Percent Solids:**	83.6
Project:	Holloman AFB; Alamogordo, NM		

VOA Special List

CAS No.	Compound	Result	RL	MDL	Units	Q
124-48-1	Dibromochloromethane	ND	5.2	1.0	ug/kg	
75-71-8	Dichlorodifluoromethane	ND	5.2	1.6	ug/kg	
156-59-2	cis-1,2-Dichloroethylene	ND	5.2	1.6	ug/kg	
10061-01-5	cis-1,3-Dichloropropene	ND	5.2	1.0	ug/kg	
1476-11-5	cis-1,4-Dichloro-2-Butene	ND	26	5.2	ug/kg	
541-73-1	m-Dichlorobenzene	ND	5.2	1.3	ug/kg	
95-50-1	o-Dichlorobenzene	ND	5.2	1.1	ug/kg	
106-46-7	p-Dichlorobenzene	ND	5.2	1.1	ug/kg	
156-60-5	trans-1,2-Dichloroethylene	ND	5.2	1.6	ug/kg	
10061-02-6	trans-1,3-Dichloropropene	ND	5.2	1.1	ug/kg	
100-41-4	Ethylbenzene	ND	5.2	1.0	ug/kg	
97-63-2	Ethyl methacrylate	ND	26	5.2	ug/kg	
76-13-1	Freon 113	ND	5.2	1.8	ug/kg	
591-78-6	2-Hexanone	ND	26	5.6	ug/kg	
87-68-3	Hexachlorobutadiene	ND	5.2	2.1	ug/kg	
110-54-3	Hexane	ND	5.2	2.0	ug/kg	
98-82-8	Isopropylbenzene	ND	5.2	1.1	ug/kg	
99-87-6	p-Isopropyltoluene	ND	5.2	1.3	ug/kg	
108-10-1	4-Methyl-2-pentanone	ND	26	5.7	ug/kg	
126-98-7	Methacrylonitrile	ND	26	9.6	ug/kg	
74-83-9	Methyl bromide	ND	5.2	2.1	ug/kg	
74-87-3	Methyl chloride	ND	5.2	2.1	ug/kg	
74-88-4	Methyl iodide	ND	10	1.1	ug/kg	
80-62-6	Methyl methacrylate	ND	5.2	1.9	ug/kg	
74-95-3	Methylene bromide	ND	5.2	1.6	ug/kg	
75-09-2	Methylene chloride [a]	13.7	10	4.8	ug/kg	
78-93-3	Methyl ethyl ketone	ND	26	6.4	ug/kg	
1634-04-4	Methyl Tert Butyl Ether	ND	5.2	2.1	ug/kg	
91-20-3	Naphthalene	ND	5.2	2.1	ug/kg	
76-01-7	Pentachloroethane	ND	26	5.2	ug/kg	
107-12-0	Propionitrile	ND	52	17	ug/kg	
103-65-1	n-Propylbenzene	ND	5.2	1.5	ug/kg	
100-42-5	Styrene	ND	5.2	2.7	ug/kg	
630-20-6	1,1,1,2-Tetrachloroethane	ND	5.2	1.0	ug/kg	
71-55-6	1,1,1-Trichloroethane	ND	5.2	1.1	ug/kg	
79-34-5	1,1,2,2-Tetrachloroethane	ND	5.2	1.3	ug/kg	
79-00-5	1,1,2-Trichloroethane	ND	5.2	1.1	ug/kg	
87-61-6	1,2,3-Trichlorobenzene	ND	5.2	1.0	ug/kg	
96-18-4	1,2,3-Trichloropropane	ND	5.2	1.8	ug/kg	
120-82-1	1,2,4-Trichlorobenzene	ND	5.2	1.3	ug/kg	

ND = Not detected MDL - Method Detection Limit
RL = Reporting Limit
E = Indicates value exceeds calibration range

J = Indicates an estimated value
B = Indicates analyte found in associated method blank
N = Indicates presumptive evidence of a compound

Report of Analysis

Client Sample ID:	SS39-DPT-01C		
Lab Sample ID:	F77899-3	**Date Sampled:**	11/08/10
Matrix:	SO - Soil	**Date Received:**	11/09/10
Method:	SW846 8260B	**Percent Solids:**	83.6
Project:	Holloman AFB; Alamogordo, NM		

VOA Special List

CAS No.	Compound	Result	RL	MDL	Units	Q
95-63-6	1,2,4-Trimethylbenzene	ND	5.2	1.1	ug/kg	
108-67-8	1,3,5-Trimethylbenzene	ND	5.2	1.4	ug/kg	
127-18-4	Tetrachloroethylene	ND	5.2	1.0	ug/kg	
108-88-3	Toluene	ND	5.2	1.3	ug/kg	
79-01-6	Trichloroethylene	ND	5.2	1.3	ug/kg	
75-69-4	Trichlorofluoromethane	ND	5.2	2.1	ug/kg	
110-57-6	Trans-1,4-Dichloro-2-Butene	ND	26	5.2	ug/kg	
75-01-4	Vinyl chloride	ND	5.2	1.6	ug/kg	
108-05-4	Vinyl Acetate	ND	26	15	ug/kg	
	m,p-Xylene	ND	10	2.3	ug/kg	
95-47-6	o-Xylene	ND	5.2	1.0	ug/kg	

CAS No.	Surrogate Recoveries	Run# 1	Run# 2	Limits
1868-53-7	Dibromofluoromethane	108%		80-121%
2037-26-5	Toluene-D8	95%		71-130%
460-00-4	4-Bromofluorobenzene	98%		59-148%
17060-07-0	1,2-Dichloroethane-D4	107%		77-123%

(a) Suspected laboratory contaminant.

ND = Not detected MDL - Method Detection Limit
RL = Reporting Limit
E = Indicates value exceeds calibration range

J = Indicates an estimated value
B = Indicates analyte found in associated method blank
N = Indicates presumptive evidence of a compound

Report of Analysis

Client Sample ID:	SS39-DPT-01C		
Lab Sample ID:	F77899-3	**Date Sampled:**	11/08/10
Matrix:	SO - Soil	**Date Received:**	11/09/10
Method:	SW846 8015C	**Percent Solids:**	83.6
Project:	Holloman AFB; Alamogordo, NM		

	File ID	DF	Analyzed	By	Prep Date	Prep Batch	Analytical Batch
Run #1	QR056677.D	1	11/15/10	AH	n/a	n/a	GQR2467
Run #2							

	Initial Weight	Final Volume	Methanol Aliquot
Run #1	5.72 g	5.0 ml	100 ul
Run #2			

CAS No.	Compound	Result	RL	MDL	Units	Q
	TPH-GRO (C6-C10)	ND	6.2	3.1	mg/kg	

CAS No.	Surrogate Recoveries	Run# 1	Run# 2	Limits
460-00-4	4-Bromofluorobenzene	85%		56-136%
98-08-8	aaa-Trifluorotoluene	81%		61-121%

ND = Not detected MDL - Method Detection Limit
RL = Reporting Limit
E = Indicates value exceeds calibration range

J = Indicates an estimated value
B = Indicates analyte found in associated method blank
N = Indicates presumptive evidence of a compound

Report of Analysis

Client Sample ID:	SS39-DPT-01C		
Lab Sample ID:	F77899-3	**Date Sampled:**	11/08/10
Matrix:	SO - Soil	**Date Received:**	11/09/10
Method:	SW846 8015C SW846 3550C	**Percent Solids:**	83.6
Project:	Holloman AFB; Alamogordo, NM		

	File ID	DF	Analyzed	By	Prep Date	Prep Batch	Analytical Batch
Run #1	YY18797.D	1	11/20/10	MV	11/11/10	OP35013	GYY677
Run #2							

	Initial Weight	Final Volume
Run #1	30.4 g	1.0 ml
Run #2		

CAS No.	Compound	Result	RL	MDL	Units	Q
	TPH (C10-C28)	ND	9.8	3.9	mg/kg	

CAS No.	Surrogate Recoveries	Run# 1	Run# 2	Limits
84-15-1	o-Terphenyl	93%		49-108%

ND = Not detected MDL - Method Detection Limit
RL = Reporting Limit
E = Indicates value exceeds calibration range

J = Indicates an estimated value
B = Indicates analyte found in associated method blank
N = Indicates presumptive evidence of a compound

Report of Analysis

Client Sample ID:	SS39-DPT-02A		
Lab Sample ID:	F77899-4	**Date Sampled:**	11/08/10
Matrix:	SO - Soil	**Date Received:**	11/09/10
Method:	SW846 8260B	**Percent Solids:**	77.1
Project:	Holloman AFB; Alamogordo, NM		

	File ID	DF	Analyzed	By	Prep Date	Prep Batch	Analytical Batch
Run #1	G0068412.D	1	11/15/10	MM	n/a	n/a	VG2578
Run #2							

	Initial Weight
Run #1	7.47 g
Run #2	

VOA Special List

CAS No.	Compound	Result	RL	MDL	Units	Q
67-64-1	Acetone	ND	43	17	ug/kg	
75-05-8	Acetonitrile	ND	43	16	ug/kg	
107-02-8	Acrolein	ND	22	9.5	ug/kg	
107-13-1	Acrylonitrile	ND	22	9.9	ug/kg	
107-05-1	Allyl chloride	ND	22	4.3	ug/kg	
71-43-2	Benzene	ND	4.3	1.3	ug/kg	
100-44-7	Benzyl Chloride	ND	4.3	1.3	ug/kg	
108-86-1	Bromobenzene	ND	4.3	1.2	ug/kg	
74-97-5	Bromochloromethane	ND	4.3	1.2	ug/kg	
75-27-4	Bromodichloromethane	ND	4.3	0.95	ug/kg	
75-25-2	Bromoform	ND	4.3	1.3	ug/kg	
104-51-8	n-Butylbenzene	ND	4.3	1.1	ug/kg	
135-98-8	sec-Butylbenzene	ND	4.3	1.4	ug/kg	
98-06-6	tert-Butylbenzene	ND	4.3	1.0	ug/kg	
108-90-7	Chlorobenzene	ND	4.3	0.87	ug/kg	
75-00-3	Chloroethane	ND	4.3	1.7	ug/kg	
67-66-3	Chloroform	ND	4.3	1.0	ug/kg	
544-10-5	1-Chlorohexane	ND	4.3	1.2	ug/kg	
95-49-8	o-Chlorotoluene	ND	4.3	1.0	ug/kg	
106-43-4	p-Chlorotoluene	ND	4.3	1.0	ug/kg	
110-75-8	2-Chloroethyl vinyl ether	ND	22	8.7	ug/kg	
75-15-0	Carbon disulfide	ND	4.3	1.7	ug/kg	
56-23-5	Carbon tetrachloride	ND	4.3	1.6	ug/kg	
75-34-3	1,1-Dichloroethane	ND	4.3	0.95	ug/kg	
75-35-4	1,1-Dichloroethylene	ND	4.3	1.2	ug/kg	
563-58-6	1,1-Dichloropropene	ND	4.3	1.1	ug/kg	
96-12-8	1,2-Dibromo-3-chloropropane	ND	4.3	2.0	ug/kg	
106-93-4	1,2-Dibromoethane	ND	4.3	0.87	ug/kg	
107-06-2	1,2-Dichloroethane	ND	4.3	0.87	ug/kg	
78-87-5	1,2-Dichloropropane	ND	4.3	1.0	ug/kg	
142-28-9	1,3-Dichloropropane	ND	4.3	0.87	ug/kg	
594-20-7	2,2-Dichloropropane	ND	4.3	1.2	ug/kg	

ND = Not detected MDL - Method Detection Limit
RL = Reporting Limit
E = Indicates value exceeds calibration range

J = Indicates an estimated value
B = Indicates analyte found in associated method blank
N = Indicates presumptive evidence of a compound

Report of Analysis

Client Sample ID:	SS39-DPT-02A		
Lab Sample ID:	F77899-4	**Date Sampled:**	11/08/10
Matrix:	SO - Soil	**Date Received:**	11/09/10
Method:	SW846 8260B	**Percent Solids:**	77.1
Project:	Holloman AFB; Alamogordo, NM		

VOA Special List

CAS No.	Compound	Result	RL	MDL	Units	Q
124-48-1	Dibromochloromethane	ND	4.3	0.87	ug/kg	
75-71-8	Dichlorodifluoromethane	ND	4.3	1.3	ug/kg	
156-59-2	cis-1,2-Dichloroethylene	ND	4.3	1.3	ug/kg	
10061-01-5	cis-1,3-Dichloropropene	ND	4.3	0.87	ug/kg	
1476-11-5	cis-1,4-Dichloro-2-Butene	ND	22	4.3	ug/kg	
541-73-1	m-Dichlorobenzene	ND	4.3	1.0	ug/kg	
95-50-1	o-Dichlorobenzene	ND	4.3	0.95	ug/kg	
106-46-7	p-Dichlorobenzene	ND	4.3	0.95	ug/kg	
156-60-5	trans-1,2-Dichloroethylene	ND	4.3	1.3	ug/kg	
10061-02-6	trans-1,3-Dichloropropene	ND	4.3	0.95	ug/kg	
100-41-4	Ethylbenzene	ND	4.3	0.87	ug/kg	
97-63-2	Ethyl methacrylate	ND	22	4.3	ug/kg	
76-13-1	Freon 113	ND	4.3	1.5	ug/kg	
591-78-6	2-Hexanone	ND	22	4.7	ug/kg	
87-68-3	Hexachlorobutadiene	ND	4.3	1.7	ug/kg	
110-54-3	Hexane	ND	4.3	1.6	ug/kg	
98-82-8	Isopropylbenzene	ND	4.3	0.95	ug/kg	
99-87-6	p-Isopropyltoluene	ND	4.3	1.0	ug/kg	
108-10-1	4-Methyl-2-pentanone	ND	22	4.8	ug/kg	
126-98-7	Methacrylonitrile	ND	22	8.0	ug/kg	
74-83-9	Methyl bromide	ND	4.3	1.7	ug/kg	
74-87-3	Methyl chloride	ND	4.3	1.7	ug/kg	
74-88-4	Methyl iodide	ND	8.7	0.95	ug/kg	
80-62-6	Methyl methacrylate	ND	4.3	1.6	ug/kg	
74-95-3	Methylene bromide	ND	4.3	1.3	ug/kg	
75-09-2	Methylene chloride [a]	8.0	8.7	4.0	ug/kg	J
78-93-3	Methyl ethyl ketone	ND	22	5.3	ug/kg	
1634-04-4	Methyl Tert Butyl Ether	ND	4.3	1.7	ug/kg	
91-20-3	Naphthalene	ND	4.3	1.7	ug/kg	
76-01-7	Pentachloroethane	ND	22	4.3	ug/kg	
107-12-0	Propionitrile	ND	43	14	ug/kg	
103-65-1	n-Propylbenzene	ND	4.3	1.2	ug/kg	
100-42-5	Styrene	ND	4.3	2.3	ug/kg	
630-20-6	1,1,1,2-Tetrachloroethane	ND	4.3	0.87	ug/kg	
71-55-6	1,1,1-Trichloroethane	ND	4.3	0.95	ug/kg	
79-34-5	1,1,2,2-Tetrachloroethane	ND	4.3	1.0	ug/kg	
79-00-5	1,1,2-Trichloroethane	ND	4.3	0.95	ug/kg	
87-61-6	1,2,3-Trichlorobenzene	ND	4.3	0.87	ug/kg	
96-18-4	1,2,3-Trichloropropane	ND	4.3	1.5	ug/kg	
120-82-1	1,2,4-Trichlorobenzene	ND	4.3	1.0	ug/kg	

ND = Not detected MDL - Method Detection Limit
RL = Reporting Limit
E = Indicates value exceeds calibration range

J = Indicates an estimated value
B = Indicates analyte found in associated method blank
N = Indicates presumptive evidence of a compound

Report of Analysis

Client Sample ID:	SS39-DPT-02A		
Lab Sample ID:	F77899-4	**Date Sampled:**	11/08/10
Matrix:	SO - Soil	**Date Received:**	11/09/10
Method:	SW846 8260B	**Percent Solids:**	77.1
Project:	Holloman AFB; Alamogordo, NM		

VOA Special List

CAS No.	Compound	Result	RL	MDL	Units	Q
95-63-6	1,2,4-Trimethylbenzene	ND	4.3	0.95	ug/kg	
108-67-8	1,3,5-Trimethylbenzene	ND	4.3	1.1	ug/kg	
127-18-4	Tetrachloroethylene	ND	4.3	0.87	ug/kg	
108-88-3	Toluene	ND	4.3	1.0	ug/kg	
79-01-6	Trichloroethylene	ND	4.3	1.0	ug/kg	
75-69-4	Trichlorofluoromethane	ND	4.3	1.7	ug/kg	
110-57-6	Trans-1,4-Dichloro-2-Butene	ND	22	4.3	ug/kg	
75-01-4	Vinyl chloride	ND	4.3	1.3	ug/kg	
108-05-4	Vinyl Acetate	ND	22	12	ug/kg	
	m,p-Xylene	ND	8.7	1.9	ug/kg	
95-47-6	o-Xylene	ND	4.3	0.87	ug/kg	

CAS No.	Surrogate Recoveries	Run# 1	Run# 2	Limits
1868-53-7	Dibromofluoromethane	108%		80-121%
2037-26-5	Toluene-D8	93%		71-130%
460-00-4	4-Bromofluorobenzene	102%		59-148%
17060-07-0	1,2-Dichloroethane-D4	109%		77-123%

(a) Suspected laboratory contaminant.

ND = Not detected MDL - Method Detection Limit
RL = Reporting Limit
E = Indicates value exceeds calibration range

J = Indicates an estimated value
B = Indicates analyte found in associated method blank
N = Indicates presumptive evidence of a compound

Report of Analysis

Client Sample ID:	SS39-DPT-02A		
Lab Sample ID:	F77899-4	**Date Sampled:**	11/08/10
Matrix:	SO - Soil	**Date Received:**	11/09/10
Method:	SW846 8015C	**Percent Solids:**	77.1
Project:	Holloman AFB; Alamogordo, NM		

	File ID	DF	Analyzed	By	Prep Date	Prep Batch	Analytical Batch
Run #1	QR056646.D	1	11/12/10	AH	n/a	n/a	GQR2466
Run #2							

	Initial Weight	Final Volume	Methanol Aliquot
Run #1	7.48 g	5.0 ml	100 ul
Run #2			

CAS No.	Compound	Result	RL	MDL	Units	Q
	TPH-GRO (C6-C10)	ND	5.8	2.9	mg/kg	

CAS No.	Surrogate Recoveries	Run# 1	Run# 2	Limits
460-00-4	4-Bromofluorobenzene	83%		56-136%
98-08-8	aaa-Trifluorotoluene	77%		61-121%

ND = Not detected MDL - Method Detection Limit
RL = Reporting Limit
E = Indicates value exceeds calibration range

J = Indicates an estimated value
B = Indicates analyte found in associated method blank
N = Indicates presumptive evidence of a compound

Report of Analysis

Client Sample ID:	SS39-DPT-02A		
Lab Sample ID:	F77899-4	**Date Sampled:**	11/08/10
Matrix:	SO - Soil	**Date Received:**	11/09/10
Method:	SW846 8015C SW846 3550C	**Percent Solids:**	77.1
Project:	Holloman AFB; Alamogordo, NM		

	File ID	DF	Analyzed	By	Prep Date	Prep Batch	Analytical Batch
Run #1	YY18792.D	1	11/20/10	MV	11/11/10	OP35013	GYY677
Run #2							

	Initial Weight	Final Volume
Run #1	30.4 g	1.0 ml
Run #2		

CAS No.	Compound	Result	RL	MDL	Units	Q
	TPH (C10-C28)	ND	11	4.3	mg/kg	

CAS No.	Surrogate Recoveries	Run# 1	Run# 2	Limits
84-15-1	o-Terphenyl	88%		49-108%

ND = Not detected MDL - Method Detection Limit
RL = Reporting Limit
E = Indicates value exceeds calibration range

J = Indicates an estimated value
B = Indicates analyte found in associated method blank
N = Indicates presumptive evidence of a compound

Report of Analysis

Client Sample ID:	SS39-DPT-02B		
Lab Sample ID:	F77899-5	**Date Sampled:**	11/08/10
Matrix:	SO - Soil	**Date Received:**	11/09/10
Method:	SW846 8260B	**Percent Solids:**	82.9
Project:	Holloman AFB; Alamogordo, NM		

	File ID	DF	Analyzed	By	Prep Date	Prep Batch	Analytical Batch
Run #1	G0068413.D	1	11/15/10	MM	n/a	n/a	VG2578
Run #2							

	Initial Weight
Run #1	6.11 g
Run #2	

VOA Special List

CAS No.	Compound	Result	RL	MDL	Units	Q
67-64-1	Acetone	ND	49	20	ug/kg	
75-05-8	Acetonitrile	ND	49	18	ug/kg	
107-02-8	Acrolein	ND	25	11	ug/kg	
107-13-1	Acrylonitrile	ND	25	11	ug/kg	
107-05-1	Allyl chloride	ND	25	4.9	ug/kg	
71-43-2	Benzene	ND	4.9	1.5	ug/kg	
100-44-7	Benzyl Chloride	ND	4.9	1.5	ug/kg	
108-86-1	Bromobenzene	ND	4.9	1.4	ug/kg	
74-97-5	Bromochloromethane	ND	4.9	1.4	ug/kg	
75-27-4	Bromodichloromethane	ND	4.9	1.1	ug/kg	
75-25-2	Bromoform	ND	4.9	1.5	ug/kg	
104-51-8	n-Butylbenzene	ND	4.9	1.3	ug/kg	
135-98-8	sec-Butylbenzene	ND	4.9	1.6	ug/kg	
98-06-6	tert-Butylbenzene	ND	4.9	1.2	ug/kg	
108-90-7	Chlorobenzene	ND	4.9	0.99	ug/kg	
75-00-3	Chloroethane	ND	4.9	2.0	ug/kg	
67-66-3	Chloroform	ND	4.9	1.2	ug/kg	
544-10-5	1-Chlorohexane	ND	4.9	1.4	ug/kg	
95-49-8	o-Chlorotoluene	ND	4.9	1.2	ug/kg	
106-43-4	p-Chlorotoluene	ND	4.9	1.2	ug/kg	
110-75-8	2-Chloroethyl vinyl ether	ND	25	9.9	ug/kg	
75-15-0	Carbon disulfide	ND	4.9	2.0	ug/kg	
56-23-5	Carbon tetrachloride	ND	4.9	1.8	ug/kg	
75-34-3	1,1-Dichloroethane	ND	4.9	1.1	ug/kg	
75-35-4	1,1-Dichloroethylene	ND	4.9	1.4	ug/kg	
563-58-6	1,1-Dichloropropene	ND	4.9	1.3	ug/kg	
96-12-8	1,2-Dibromo-3-chloropropane	ND	4.9	2.3	ug/kg	
106-93-4	1,2-Dibromoethane	ND	4.9	0.99	ug/kg	
107-06-2	1,2-Dichloroethane	ND	4.9	0.99	ug/kg	
78-87-5	1,2-Dichloropropane	ND	4.9	1.2	ug/kg	
142-28-9	1,3-Dichloropropane	ND	4.9	0.99	ug/kg	
594-20-7	2,2-Dichloropropane	ND	4.9	1.4	ug/kg	

ND = Not detected MDL - Method Detection Limit
RL = Reporting Limit
E = Indicates value exceeds calibration range

J = Indicates an estimated value
B = Indicates analyte found in associated method blank
N = Indicates presumptive evidence of a compound

Report of Analysis

Client Sample ID:	SS39-DPT-02B		
Lab Sample ID:	F77899-5	**Date Sampled:**	11/08/10
Matrix:	SO - Soil	**Date Received:**	11/09/10
Method:	SW846 8260B	**Percent Solids:**	82.9
Project:	Holloman AFB; Alamogordo, NM		

VOA Special List

CAS No.	Compound	Result	RL	MDL	Units	Q
124-48-1	Dibromochloromethane	ND	4.9	0.99	ug/kg	
75-71-8	Dichlorodifluoromethane	ND	4.9	1.5	ug/kg	
156-59-2	cis-1,2-Dichloroethylene	ND	4.9	1.5	ug/kg	
10061-01-5	cis-1,3-Dichloropropene	ND	4.9	0.99	ug/kg	
1476-11-5	cis-1,4-Dichloro-2-Butene	ND	25	4.9	ug/kg	
541-73-1	m-Dichlorobenzene	ND	4.9	1.2	ug/kg	
95-50-1	o-Dichlorobenzene	ND	4.9	1.1	ug/kg	
106-46-7	p-Dichlorobenzene	ND	4.9	1.1	ug/kg	
156-60-5	trans-1,2-Dichloroethylene	ND	4.9	1.5	ug/kg	
10061-02-6	trans-1,3-Dichloropropene	ND	4.9	1.1	ug/kg	
100-41-4	Ethylbenzene	ND	4.9	0.99	ug/kg	
97-63-2	Ethyl methacrylate	ND	25	4.9	ug/kg	
76-13-1	Freon 113	ND	4.9	1.7	ug/kg	
591-78-6	2-Hexanone	ND	25	5.3	ug/kg	
87-68-3	Hexachlorobutadiene	ND	4.9	2.0	ug/kg	
110-54-3	Hexane	ND	4.9	1.9	ug/kg	
98-82-8	Isopropylbenzene	ND	4.9	1.1	ug/kg	
99-87-6	p-Isopropyltoluene	ND	4.9	1.2	ug/kg	
108-10-1	4-Methyl-2-pentanone	ND	25	5.4	ug/kg	
126-98-7	Methacrylonitrile	ND	25	9.1	ug/kg	
74-83-9	Methyl bromide	ND	4.9	2.0	ug/kg	
74-87-3	Methyl chloride	ND	4.9	2.0	ug/kg	
74-88-4	Methyl iodide	ND	9.9	1.1	ug/kg	
80-62-6	Methyl methacrylate	ND	4.9	1.8	ug/kg	
74-95-3	Methylene bromide	ND	4.9	1.5	ug/kg	
75-09-2	Methylene chloride [a]	10.2	9.9	4.5	ug/kg	
78-93-3	Methyl ethyl ketone	ND	25	6.0	ug/kg	
1634-04-4	Methyl Tert Butyl Ether	ND	4.9	2.0	ug/kg	
91-20-3	Naphthalene	ND	4.9	2.0	ug/kg	
76-01-7	Pentachloroethane	ND	25	4.9	ug/kg	
107-12-0	Propionitrile	ND	49	16	ug/kg	
103-65-1	n-Propylbenzene	ND	4.9	1.4	ug/kg	
100-42-5	Styrene	ND	4.9	2.6	ug/kg	
630-20-6	1,1,1,2-Tetrachloroethane	ND	4.9	0.99	ug/kg	
71-55-6	1,1,1-Trichloroethane	ND	4.9	1.1	ug/kg	
79-34-5	1,1,2,2-Tetrachloroethane	ND	4.9	1.2	ug/kg	
79-00-5	1,1,2-Trichloroethane	ND	4.9	1.1	ug/kg	
87-61-6	1,2,3-Trichlorobenzene	ND	4.9	0.99	ug/kg	
96-18-4	1,2,3-Trichloropropane	ND	4.9	1.7	ug/kg	
120-82-1	1,2,4-Trichlorobenzene	ND	4.9	1.2	ug/kg	

ND = Not detected MDL - Method Detection Limit
RL = Reporting Limit
E = Indicates value exceeds calibration range

J = Indicates an estimated value
B = Indicates analyte found in associated method blank
N = Indicates presumptive evidence of a compound

Report of Analysis

Client Sample ID:	SS39-DPT-02B		
Lab Sample ID:	F77899-5	**Date Sampled:**	11/08/10
Matrix:	SO - Soil	**Date Received:**	11/09/10
Method:	SW846 8260B	**Percent Solids:**	82.9
Project:	Holloman AFB; Alamogordo, NM		

VOA Special List

CAS No.	Compound	Result	RL	MDL	Units	Q
95-63-6	1,2,4-Trimethylbenzene	ND	4.9	1.1	ug/kg	
108-67-8	1,3,5-Trimethylbenzene	ND	4.9	1.3	ug/kg	
127-18-4	Tetrachloroethylene	ND	4.9	0.99	ug/kg	
108-88-3	Toluene	ND	4.9	1.2	ug/kg	
79-01-6	Trichloroethylene	ND	4.9	1.2	ug/kg	
75-69-4	Trichlorofluoromethane	ND	4.9	2.0	ug/kg	
110-57-6	Trans-1,4-Dichloro-2-Butene	ND	25	4.9	ug/kg	
75-01-4	Vinyl chloride	ND	4.9	1.5	ug/kg	
108-05-4	Vinyl Acetate	ND	25	14	ug/kg	
	m,p-Xylene	ND	9.9	2.2	ug/kg	
95-47-6	o-Xylene	ND	4.9	0.99	ug/kg	

CAS No.	Surrogate Recoveries	Run# 1	Run# 2	Limits
1868-53-7	Dibromofluoromethane	117%		80-121%
2037-26-5	Toluene-D8	92%		71-130%
460-00-4	4-Bromofluorobenzene	99%		59-148%
17060-07-0	1,2-Dichloroethane-D4	116%		77-123%

(a) Suspected laboratory contaminant.

ND = Not detected MDL - Method Detection Limit
RL = Reporting Limit
E = Indicates value exceeds calibration range

J = Indicates an estimated value
B = Indicates analyte found in associated method blank
N = Indicates presumptive evidence of a compound

Report of Analysis

Client Sample ID:	SS39-DPT-02B		
Lab Sample ID:	F77899-5	**Date Sampled:**	11/08/10
Matrix:	SO - Soil	**Date Received:**	11/09/10
Method:	SW846 8015C	**Percent Solids:**	82.9
Project:	Holloman AFB; Alamogordo, NM		

	File ID	DF	Analyzed	By	Prep Date	Prep Batch	Analytical Batch
Run #1	QR056649.D	1	11/12/10	AH	n/a	n/a	GQR2466
Run #2							

	Initial Weight	Final Volume	Methanol Aliquot
Run #1	5.71 g	5.0 ml	100 ul
Run #2			

CAS No.	Compound	Result	RL	MDL	Units	Q
	TPH-GRO (C6-C10)	ND	6.3	3.2	mg/kg	

CAS No.	Surrogate Recoveries	Run# 1	Run# 2	Limits
460-00-4	4-Bromofluorobenzene	85%		56-136%
98-08-8	aaa-Trifluorotoluene	81%		61-121%

ND = Not detected MDL - Method Detection Limit
RL = Reporting Limit
E = Indicates value exceeds calibration range

J = Indicates an estimated value
B = Indicates analyte found in associated method blank
N = Indicates presumptive evidence of a compound

Report of Analysis

Client Sample ID:	SS39-DPT-02B		
Lab Sample ID:	F77899-5	**Date Sampled:**	11/08/10
Matrix:	SO - Soil	**Date Received:**	11/09/10
Method:	SW846 8015C SW846 3550C	**Percent Solids:**	82.9
Project:	Holloman AFB; Alamogordo, NM		

	File ID	DF	Analyzed	By	Prep Date	Prep Batch	Analytical Batch
Run #1	YY18793.D	1	11/20/10	MV	11/11/10	OP35013	GYY677
Run #2							

	Initial Weight	Final Volume
Run #1	30.3 g	1.0 ml
Run #2		

CAS No.	Compound	Result	RL	MDL	Units	Q
	TPH (C10-C28)	ND	10	4.0	mg/kg	

CAS No.	Surrogate Recoveries	Run# 1	Run# 2	Limits
84-15-1	o-Terphenyl	88%		49-108%

ND = Not detected MDL - Method Detection Limit
RL = Reporting Limit
E = Indicates value exceeds calibration range

J = Indicates an estimated value
B = Indicates analyte found in associated method blank
N = Indicates presumptive evidence of a compound

Report of Analysis

Client Sample ID:	SS39-DPT-02C		
Lab Sample ID:	F77899-6	**Date Sampled:**	11/08/10
Matrix:	SO - Soil	**Date Received:**	11/09/10
Method:	SW846 8260B	**Percent Solids:**	79.6
Project:	Holloman AFB; Alamogordo, NM		

	File ID	DF	Analyzed	By	Prep Date	Prep Batch	Analytical Batch
Run #1	G0068414.D	1	11/15/10	MM	n/a	n/a	VG2578
Run #2							

	Initial Weight
Run #1	6.94 g
Run #2	

VOA Special List

CAS No.	Compound	Result	RL	MDL	Units	Q
67-64-1	Acetone	ND	45	18	ug/kg	
75-05-8	Acetonitrile	ND	45	16	ug/kg	
107-02-8	Acrolein	ND	23	10	ug/kg	
107-13-1	Acrylonitrile	ND	23	10	ug/kg	
107-05-1	Allyl chloride	ND	23	4.5	ug/kg	
71-43-2	Benzene	ND	4.5	1.4	ug/kg	
100-44-7	Benzyl Chloride	ND	4.5	1.4	ug/kg	
108-86-1	Bromobenzene	ND	4.5	1.3	ug/kg	
74-97-5	Bromochloromethane	ND	4.5	1.3	ug/kg	
75-27-4	Bromodichloromethane	ND	4.5	1.0	ug/kg	
75-25-2	Bromoform	ND	4.5	1.4	ug/kg	
104-51-8	n-Butylbenzene	ND	4.5	1.2	ug/kg	
135-98-8	sec-Butylbenzene	ND	4.5	1.4	ug/kg	
98-06-6	tert-Butylbenzene	ND	4.5	1.1	ug/kg	
108-90-7	Chlorobenzene	ND	4.5	0.91	ug/kg	
75-00-3	Chloroethane	ND	4.5	1.8	ug/kg	
67-66-3	Chloroform	ND	4.5	1.1	ug/kg	
544-10-5	1-Chlorohexane	ND	4.5	1.3	ug/kg	
95-49-8	o-Chlorotoluene	ND	4.5	1.1	ug/kg	
106-43-4	p-Chlorotoluene	ND	4.5	1.1	ug/kg	
110-75-8	2-Chloroethyl vinyl ether	ND	23	9.1	ug/kg	
75-15-0	Carbon disulfide	ND	4.5	1.8	ug/kg	
56-23-5	Carbon tetrachloride	ND	4.5	1.6	ug/kg	
75-34-3	1,1-Dichloroethane	ND	4.5	1.0	ug/kg	
75-35-4	1,1-Dichloroethylene	ND	4.5	1.3	ug/kg	
563-58-6	1,1-Dichloropropene	ND	4.5	1.2	ug/kg	
96-12-8	1,2-Dibromo-3-chloropropane	ND	4.5	2.1	ug/kg	
106-93-4	1,2-Dibromoethane	ND	4.5	0.91	ug/kg	
107-06-2	1,2-Dichloroethane	ND	4.5	0.91	ug/kg	
78-87-5	1,2-Dichloropropane	ND	4.5	1.1	ug/kg	
142-28-9	1,3-Dichloropropane	ND	4.5	0.91	ug/kg	
594-20-7	2,2-Dichloropropane	ND	4.5	1.3	ug/kg	

ND = Not detected MDL - Method Detection Limit
RL = Reporting Limit
E = Indicates value exceeds calibration range

J = Indicates an estimated value
B = Indicates analyte found in associated method blank
N = Indicates presumptive evidence of a compound

Report of Analysis

Client Sample ID:	SS39-DPT-02C		
Lab Sample ID:	F77899-6	**Date Sampled:**	11/08/10
Matrix:	SO - Soil	**Date Received:**	11/09/10
Method:	SW846 8260B	**Percent Solids:**	79.6
Project:	Holloman AFB; Alamogordo, NM		

VOA Special List

CAS No.	Compound	Result	RL	MDL	Units	Q
124-48-1	Dibromochloromethane	ND	4.5	0.91	ug/kg	
75-71-8	Dichlorodifluoromethane	ND	4.5	1.4	ug/kg	
156-59-2	cis-1,2-Dichloroethylene	ND	4.5	1.4	ug/kg	
10061-01-5	cis-1,3-Dichloropropene	ND	4.5	0.91	ug/kg	
1476-11-5	cis-1,4-Dichloro-2-Butene	ND	23	4.5	ug/kg	
541-73-1	m-Dichlorobenzene	ND	4.5	1.1	ug/kg	
95-50-1	o-Dichlorobenzene	ND	4.5	1.0	ug/kg	
106-46-7	p-Dichlorobenzene	ND	4.5	1.0	ug/kg	
156-60-5	trans-1,2-Dichloroethylene	ND	4.5	1.4	ug/kg	
10061-02-6	trans-1,3-Dichloropropene	ND	4.5	1.0	ug/kg	
100-41-4	Ethylbenzene	ND	4.5	0.91	ug/kg	
97-63-2	Ethyl methacrylate	ND	23	4.5	ug/kg	
76-13-1	Freon 113	ND	4.5	1.5	ug/kg	
591-78-6	2-Hexanone	ND	23	4.9	ug/kg	
87-68-3	Hexachlorobutadiene	ND	4.5	1.8	ug/kg	
110-54-3	Hexane	ND	4.5	1.7	ug/kg	
98-82-8	Isopropylbenzene	ND	4.5	1.0	ug/kg	
99-87-6	p-Isopropyltoluene	ND	4.5	1.1	ug/kg	
108-10-1	4-Methyl-2-pentanone	ND	23	5.0	ug/kg	
126-98-7	Methacrylonitrile	ND	23	8.3	ug/kg	
74-83-9	Methyl bromide	ND	4.5	1.8	ug/kg	
74-87-3	Methyl chloride	ND	4.5	1.8	ug/kg	
74-88-4	Methyl iodide	ND	9.1	1.0	ug/kg	
80-62-6	Methyl methacrylate	ND	4.5	1.6	ug/kg	
74-95-3	Methylene bromide	ND	4.5	1.4	ug/kg	
75-09-2	Methylene chloride [a]	15.9	9.1	4.2	ug/kg	
78-93-3	Methyl ethyl ketone	ND	23	5.5	ug/kg	
1634-04-4	Methyl Tert Butyl Ether	ND	4.5	1.8	ug/kg	
91-20-3	Naphthalene	ND	4.5	1.8	ug/kg	
76-01-7	Pentachloroethane	ND	23	4.5	ug/kg	
107-12-0	Propionitrile	ND	45	14	ug/kg	
103-65-1	n-Propylbenzene	ND	4.5	1.3	ug/kg	
100-42-5	Styrene	ND	4.5	2.4	ug/kg	
630-20-6	1,1,1,2-Tetrachloroethane	ND	4.5	0.91	ug/kg	
71-55-6	1,1,1-Trichloroethane	ND	4.5	1.0	ug/kg	
79-34-5	1,1,2,2-Tetrachloroethane	ND	4.5	1.1	ug/kg	
79-00-5	1,1,2-Trichloroethane	ND	4.5	1.0	ug/kg	
87-61-6	1,2,3-Trichlorobenzene	ND	4.5	0.91	ug/kg	
96-18-4	1,2,3-Trichloropropane	ND	4.5	1.5	ug/kg	
120-82-1	1,2,4-Trichlorobenzene	ND	4.5	1.1	ug/kg	

ND = Not detected MDL - Method Detection Limit
RL = Reporting Limit
E = Indicates value exceeds calibration range

J = Indicates an estimated value
B = Indicates analyte found in associated method blank
N = Indicates presumptive evidence of a compound

Report of Analysis

Client Sample ID:	SS39-DPT-02C		
Lab Sample ID:	F77899-6	**Date Sampled:**	11/08/10
Matrix:	SO - Soil	**Date Received:**	11/09/10
Method:	SW846 8260B	**Percent Solids:**	79.6
Project:	Holloman AFB; Alamogordo, NM		

VOA Special List

CAS No.	Compound	Result	RL	MDL	Units	Q
95-63-6	1,2,4-Trimethylbenzene	ND	4.5	1.0	ug/kg	
108-67-8	1,3,5-Trimethylbenzene	ND	4.5	1.2	ug/kg	
127-18-4	Tetrachloroethylene	ND	4.5	0.91	ug/kg	
108-88-3	Toluene	ND	4.5	1.1	ug/kg	
79-01-6	Trichloroethylene	ND	4.5	1.1	ug/kg	
75-69-4	Trichlorofluoromethane	ND	4.5	1.8	ug/kg	
110-57-6	Trans-1,4-Dichloro-2-Butene	ND	23	4.5	ug/kg	
75-01-4	Vinyl chloride	ND	4.5	1.4	ug/kg	
108-05-4	Vinyl Acetate	ND	23	13	ug/kg	
	m,p-Xylene	ND	9.1	2.0	ug/kg	
95-47-6	o-Xylene	ND	4.5	0.91	ug/kg	

CAS No.	Surrogate Recoveries	Run# 1	Run# 2	Limits
1868-53-7	Dibromofluoromethane	114%		80-121%
2037-26-5	Toluene-D8	98%		71-130%
460-00-4	4-Bromofluorobenzene	101%		59-148%
17060-07-0	1,2-Dichloroethane-D4	108%		77-123%

(a) Suspected laboratory contaminant.

ND = Not detected MDL - Method Detection Limit
RL = Reporting Limit
E = Indicates value exceeds calibration range

J = Indicates an estimated value
B = Indicates analyte found in associated method blank
N = Indicates presumptive evidence of a compound

Report of Analysis

Client Sample ID:	SS39-DPT-02C		
Lab Sample ID:	F77899-6	**Date Sampled:**	11/08/10
Matrix:	SO - Soil	**Date Received:**	11/09/10
Method:	SW846 8015C	**Percent Solids:**	79.6
Project:	Holloman AFB; Alamogordo, NM		

	File ID	DF	Analyzed	By	Prep Date	Prep Batch	Analytical Batch
Run #1	QR056650.D	1	11/12/10	AH	n/a	n/a	GQR2466
Run #2							

	Initial Weight	Final Volume	Methanol Aliquot
Run #1	6.24 g	5.0 ml	100 ul
Run #2			

CAS No.	Compound	Result	RL	MDL	Units	Q
	TPH-GRO (C6-C10)	ND	6.3	3.2	mg/kg	

CAS No.	Surrogate Recoveries	Run# 1	Run# 2	Limits
460-00-4	4-Bromofluorobenzene	84%		56-136%
98-08-8	aaa-Trifluorotoluene	80%		61-121%

ND = Not detected MDL - Method Detection Limit
RL = Reporting Limit
E = Indicates value exceeds calibration range

J = Indicates an estimated value
B = Indicates analyte found in associated method blank
N = Indicates presumptive evidence of a compound

Report of Analysis

Client Sample ID:	SS39-DPT-02C		
Lab Sample ID:	F77899-6	**Date Sampled:**	11/08/10
Matrix:	SO - Soil	**Date Received:**	11/09/10
Method:	SW846 8015C SW846 3550C	**Percent Solids:**	79.6
Project:	Holloman AFB; Alamogordo, NM		

	File ID	DF	Analyzed	By	Prep Date	Prep Batch	Analytical Batch
Run #1	YY18794.D	1	11/20/10	MV	11/11/10	OP35013	GYY677
Run #2							

	Initial Weight	Final Volume
Run #1	30.2 g	1.0 ml
Run #2		

CAS No.	Compound	Result	RL	MDL	Units	Q
	TPH (C10-C28)	ND	10	4.2	mg/kg	

CAS No.	Surrogate Recoveries	Run# 1	Run# 2	Limits
84-15-1	o-Terphenyl	92%		49-108%

ND = Not detected MDL - Method Detection Limit
RL = Reporting Limit
E = Indicates value exceeds calibration range

J = Indicates an estimated value
B = Indicates analyte found in associated method blank
N = Indicates presumptive evidence of a compound

Report of Analysis

Client Sample ID:	SS39-DPT-03A		
Lab Sample ID:	F77899-7	**Date Sampled:**	11/08/10
Matrix:	SO - Soil	**Date Received:**	11/09/10
Method:	SW846 8260B	**Percent Solids:**	73.9
Project:	Holloman AFB; Alamogordo, NM		

	File ID	DF	Analyzed	By	Prep Date	Prep Batch	Analytical Batch
Run #1	G0068415.D	1	11/15/10	MM	n/a	n/a	VG2578
Run #2							

	Initial Weight
Run #1	7.46 g
Run #2	

VOA Special List

CAS No.	Compound	Result	RL	MDL	Units	Q
67-64-1	Acetone	ND	45	18	ug/kg	
75-05-8	Acetonitrile	ND	45	16	ug/kg	
107-02-8	Acrolein	ND	23	10	ug/kg	
107-13-1	Acrylonitrile	ND	23	10	ug/kg	
107-05-1	Allyl chloride	ND	23	4.5	ug/kg	
71-43-2	Benzene	ND	4.5	1.4	ug/kg	
100-44-7	Benzyl Chloride	ND	4.5	1.4	ug/kg	
108-86-1	Bromobenzene	ND	4.5	1.3	ug/kg	
74-97-5	Bromochloromethane	ND	4.5	1.3	ug/kg	
75-27-4	Bromodichloromethane	ND	4.5	1.0	ug/kg	
75-25-2	Bromoform	ND	4.5	1.4	ug/kg	
104-51-8	n-Butylbenzene	ND	4.5	1.2	ug/kg	
135-98-8	sec-Butylbenzene	ND	4.5	1.5	ug/kg	
98-06-6	tert-Butylbenzene	ND	4.5	1.1	ug/kg	
108-90-7	Chlorobenzene	ND	4.5	0.91	ug/kg	
75-00-3	Chloroethane	ND	4.5	1.8	ug/kg	
67-66-3	Chloroform	ND	4.5	1.1	ug/kg	
544-10-5	1-Chlorohexane	ND	4.5	1.3	ug/kg	
95-49-8	o-Chlorotoluene	ND	4.5	1.1	ug/kg	
106-43-4	p-Chlorotoluene	ND	4.5	1.1	ug/kg	
110-75-8	2-Chloroethyl vinyl ether	ND	23	9.1	ug/kg	
75-15-0	Carbon disulfide	ND	4.5	1.8	ug/kg	
56-23-5	Carbon tetrachloride	ND	4.5	1.6	ug/kg	
75-34-3	1,1-Dichloroethane	ND	4.5	1.0	ug/kg	
75-35-4	1,1-Dichloroethylene	ND	4.5	1.3	ug/kg	
563-58-6	1,1-Dichloropropene	ND	4.5	1.2	ug/kg	
96-12-8	1,2-Dibromo-3-chloropropane	ND	4.5	2.1	ug/kg	
106-93-4	1,2-Dibromoethane	ND	4.5	0.91	ug/kg	
107-06-2	1,2-Dichloroethane	ND	4.5	0.91	ug/kg	
78-87-5	1,2-Dichloropropane	ND	4.5	1.1	ug/kg	
142-28-9	1,3-Dichloropropane	ND	4.5	0.91	ug/kg	
594-20-7	2,2-Dichloropropane	ND	4.5	1.3	ug/kg	

ND = Not detected MDL - Method Detection Limit
RL = Reporting Limit
E = Indicates value exceeds calibration range

J = Indicates an estimated value
B = Indicates analyte found in associated method blank
N = Indicates presumptive evidence of a compound

Report of Analysis

Client Sample ID:	SS39-DPT-03A		
Lab Sample ID:	F77899-7	**Date Sampled:**	11/08/10
Matrix:	SO - Soil	**Date Received:**	11/09/10
Method:	SW846 8260B	**Percent Solids:**	73.9
Project:	Holloman AFB; Alamogordo, NM		

VOA Special List

CAS No.	Compound	Result	RL	MDL	Units	Q
124-48-1	Dibromochloromethane	ND	4.5	0.91	ug/kg	
75-71-8	Dichlorodifluoromethane	ND	4.5	1.4	ug/kg	
156-59-2	cis-1,2-Dichloroethylene	ND	4.5	1.4	ug/kg	
10061-01-5	cis-1,3-Dichloropropene	ND	4.5	0.91	ug/kg	
1476-11-5	cis-1,4-Dichloro-2-Butene	ND	23	4.5	ug/kg	
541-73-1	m-Dichlorobenzene	ND	4.5	1.1	ug/kg	
95-50-1	o-Dichlorobenzene	ND	4.5	1.0	ug/kg	
106-46-7	p-Dichlorobenzene	ND	4.5	1.0	ug/kg	
156-60-5	trans-1,2-Dichloroethylene	ND	4.5	1.4	ug/kg	
10061-02-6	trans-1,3-Dichloropropene	ND	4.5	1.0	ug/kg	
100-41-4	Ethylbenzene	ND	4.5	0.91	ug/kg	
97-63-2	Ethyl methacrylate	ND	23	4.5	ug/kg	
76-13-1	Freon 113	ND	4.5	1.5	ug/kg	
591-78-6	2-Hexanone	ND	23	4.9	ug/kg	
87-68-3	Hexachlorobutadiene	ND	4.5	1.8	ug/kg	
110-54-3	Hexane	ND	4.5	1.7	ug/kg	
98-82-8	Isopropylbenzene	ND	4.5	1.0	ug/kg	
99-87-6	p-Isopropyltoluene	ND	4.5	1.1	ug/kg	
108-10-1	4-Methyl-2-pentanone	ND	23	5.0	ug/kg	
126-98-7	Methacrylonitrile	ND	23	8.3	ug/kg	
74-83-9	Methyl bromide	ND	4.5	1.8	ug/kg	
74-87-3	Methyl chloride	ND	4.5	1.8	ug/kg	
74-88-4	Methyl iodide	ND	9.1	1.0	ug/kg	
80-62-6	Methyl methacrylate	ND	4.5	1.6	ug/kg	
74-95-3	Methylene bromide	ND	4.5	1.4	ug/kg	
75-09-2	Methylene chloride [a]	6.3	9.1	4.2	ug/kg	J
78-93-3	Methyl ethyl ketone	ND	23	5.5	ug/kg	
1634-04-4	Methyl Tert Butyl Ether	ND	4.5	1.8	ug/kg	
91-20-3	Naphthalene	ND	4.5	1.8	ug/kg	
76-01-7	Pentachloroethane	ND	23	4.5	ug/kg	
107-12-0	Propionitrile	ND	45	14	ug/kg	
103-65-1	n-Propylbenzene	ND	4.5	1.3	ug/kg	
100-42-5	Styrene	ND	4.5	2.4	ug/kg	
630-20-6	1,1,1,2-Tetrachloroethane	ND	4.5	0.91	ug/kg	
71-55-6	1,1,1-Trichloroethane	ND	4.5	1.0	ug/kg	
79-34-5	1,1,2,2-Tetrachloroethane	ND	4.5	1.1	ug/kg	
79-00-5	1,1,2-Trichloroethane	ND	4.5	1.0	ug/kg	
87-61-6	1,2,3-Trichlorobenzene	ND	4.5	0.91	ug/kg	
96-18-4	1,2,3-Trichloropropane	ND	4.5	1.5	ug/kg	
120-82-1	1,2,4-Trichlorobenzene	ND	4.5	1.1	ug/kg	

ND = Not detected MDL - Method Detection Limit
RL = Reporting Limit
E = Indicates value exceeds calibration range

J = Indicates an estimated value
B = Indicates analyte found in associated method blank
N = Indicates presumptive evidence of a compound

Report of Analysis

Client Sample ID:	SS39-DPT-03A		
Lab Sample ID:	F77899-7	**Date Sampled:**	11/08/10
Matrix:	SO - Soil	**Date Received:**	11/09/10
Method:	SW846 8260B	**Percent Solids:**	73.9
Project:	Holloman AFB; Alamogordo, NM		

VOA Special List

CAS No.	Compound	Result	RL	MDL	Units	Q
95-63-6	1,2,4-Trimethylbenzene	ND	4.5	1.0	ug/kg	
108-67-8	1,3,5-Trimethylbenzene	ND	4.5	1.2	ug/kg	
127-18-4	Tetrachloroethylene	ND	4.5	0.91	ug/kg	
108-88-3	Toluene	ND	4.5	1.1	ug/kg	
79-01-6	Trichloroethylene	ND	4.5	1.1	ug/kg	
75-69-4	Trichlorofluoromethane	ND	4.5	1.8	ug/kg	
110-57-6	Trans-1,4-Dichloro-2-Butene	ND	23	4.5	ug/kg	
75-01-4	Vinyl chloride	ND	4.5	1.4	ug/kg	
108-05-4	Vinyl Acetate	ND	23	13	ug/kg	
	m,p-Xylene	ND	9.1	2.0	ug/kg	
95-47-6	o-Xylene	ND	4.5	0.91	ug/kg	

CAS No.	Surrogate Recoveries	Run# 1	Run# 2	Limits
1868-53-7	Dibromofluoromethane	112%		80-121%
2037-26-5	Toluene-D8	93%		71-130%
460-00-4	4-Bromofluorobenzene	98%		59-148%
17060-07-0	1,2-Dichloroethane-D4	105%		77-123%

(a) Suspected laboratory contaminant.

ND = Not detected MDL - Method Detection Limit
RL = Reporting Limit
E = Indicates value exceeds calibration range

J = Indicates an estimated value
B = Indicates analyte found in associated method blank
N = Indicates presumptive evidence of a compound

Report of Analysis

Client Sample ID:	SS39-DPT-03A		
Lab Sample ID:	F77899-7	**Date Sampled:**	11/08/10
Matrix:	SO - Soil	**Date Received:**	11/09/10
Method:	SW846 8015C	**Percent Solids:**	73.9
Project:	Holloman AFB; Alamogordo, NM		

	File ID	DF	Analyzed	By	Prep Date	Prep Batch	Analytical Batch
Run #1	QR056651.D	1	11/12/10	AH	n/a	n/a	GQR2466
Run #2							

	Initial Weight	Final Volume	Methanol Aliquot
Run #1	6.77 g	5.0 ml	100 ul
Run #2			

CAS No.	Compound	Result	RL	MDL	Units	Q
	TPH-GRO (C6-C10)	ND	6.8	3.4	mg/kg	

CAS No.	Surrogate Recoveries	Run# 1	Run# 2	Limits
460-00-4	4-Bromofluorobenzene	88%		56-136%
98-08-8	aaa-Trifluorotoluene	81%		61-121%

ND = Not detected MDL - Method Detection Limit
RL = Reporting Limit
E = Indicates value exceeds calibration range

J = Indicates an estimated value
B = Indicates analyte found in associated method blank
N = Indicates presumptive evidence of a compound

Report of Analysis

Client Sample ID:	SS39-DPT-03A		
Lab Sample ID:	F77899-7	**Date Sampled:**	11/08/10
Matrix:	SO - Soil	**Date Received:**	11/09/10
Method:	SW846 8015C SW846 3550C	**Percent Solids:**	73.9
Project:	Holloman AFB; Alamogordo, NM		

	File ID	DF	Analyzed	By	Prep Date	Prep Batch	Analytical Batch
Run #1	YY18800.D	1	11/20/10	MV	11/11/10	OP35013	GYY677
Run #2							

	Initial Weight	Final Volume
Run #1	30.4 g	1.0 ml
Run #2		

CAS No.	Compound	Result	RL	MDL	Units	Q
	TPH (C10-C28)	ND	11	4.5	mg/kg	

CAS No.	Surrogate Recoveries	Run# 1	Run# 2	Limits
84-15-1	o-Terphenyl	87%		49-108%

ND = Not detected MDL - Method Detection Limit
RL = Reporting Limit
E = Indicates value exceeds calibration range

J = Indicates an estimated value
B = Indicates analyte found in associated method blank
N = Indicates presumptive evidence of a compound

Report of Analysis

Client Sample ID:	SS39-DPT-03B		
Lab Sample ID:	F77899-8	**Date Sampled:**	11/08/10
Matrix:	SO - Soil	**Date Received:**	11/09/10
Method:	SW846 8260B	**Percent Solids:**	76.3
Project:	Holloman AFB; Alamogordo, NM		

	File ID	DF	Analyzed	By	Prep Date	Prep Batch	Analytical Batch
Run #1	G0068416.D	1	11/15/10	MM	n/a	n/a	VG2578
Run #2							

	Initial Weight
Run #1	7.53 g
Run #2	

VOA Special List

CAS No.	Compound	Result	RL	MDL	Units	Q
67-64-1	Acetone	ND	44	17	ug/kg	
75-05-8	Acetonitrile	ND	44	16	ug/kg	
107-02-8	Acrolein	ND	22	9.6	ug/kg	
107-13-1	Acrylonitrile	ND	22	9.9	ug/kg	
107-05-1	Allyl chloride	ND	22	4.4	ug/kg	
71-43-2	Benzene	ND	4.4	1.3	ug/kg	
100-44-7	Benzyl Chloride	ND	4.4	1.3	ug/kg	
108-86-1	Bromobenzene	ND	4.4	1.2	ug/kg	
74-97-5	Bromochloromethane	ND	4.4	1.2	ug/kg	
75-27-4	Bromodichloromethane	ND	4.4	0.96	ug/kg	
75-25-2	Bromoform	ND	4.4	1.3	ug/kg	
104-51-8	n-Butylbenzene	ND	4.4	1.1	ug/kg	
135-98-8	sec-Butylbenzene	ND	4.4	1.4	ug/kg	
98-06-6	tert-Butylbenzene	ND	4.4	1.0	ug/kg	
108-90-7	Chlorobenzene	ND	4.4	0.87	ug/kg	
75-00-3	Chloroethane	ND	4.4	1.7	ug/kg	
67-66-3	Chloroform	ND	4.4	1.0	ug/kg	
544-10-5	1-Chlorohexane	ND	4.4	1.2	ug/kg	
95-49-8	o-Chlorotoluene	ND	4.4	1.0	ug/kg	
106-43-4	p-Chlorotoluene	ND	4.4	1.0	ug/kg	
110-75-8	2-Chloroethyl vinyl ether	ND	22	8.7	ug/kg	
75-15-0	Carbon disulfide	ND	4.4	1.7	ug/kg	
56-23-5	Carbon tetrachloride	ND	4.4	1.6	ug/kg	
75-34-3	1,1-Dichloroethane	ND	4.4	0.96	ug/kg	
75-35-4	1,1-Dichloroethylene	ND	4.4	1.2	ug/kg	
563-58-6	1,1-Dichloropropene	ND	4.4	1.1	ug/kg	
96-12-8	1,2-Dibromo-3-chloropropane	ND	4.4	2.0	ug/kg	
106-93-4	1,2-Dibromoethane	ND	4.4	0.87	ug/kg	
107-06-2	1,2-Dichloroethane	ND	4.4	0.87	ug/kg	
78-87-5	1,2-Dichloropropane	ND	4.4	1.0	ug/kg	
142-28-9	1,3-Dichloropropane	ND	4.4	0.87	ug/kg	
594-20-7	2,2-Dichloropropane	ND	4.4	1.2	ug/kg	

ND = Not detected MDL - Method Detection Limit
RL = Reporting Limit
E = Indicates value exceeds calibration range

J = Indicates an estimated value
B = Indicates analyte found in associated method blank
N = Indicates presumptive evidence of a compound

Report of Analysis

Client Sample ID:	SS39-DPT-03B		
Lab Sample ID:	F77899-8	**Date Sampled:**	11/08/10
Matrix:	SO - Soil	**Date Received:**	11/09/10
Method:	SW846 8260B	**Percent Solids:**	76.3
Project:	Holloman AFB; Alamogordo, NM		

VOA Special List

CAS No.	Compound	Result	RL	MDL	Units	Q
124-48-1	Dibromochloromethane	ND	4.4	0.87	ug/kg	
75-71-8	Dichlorodifluoromethane	ND	4.4	1.3	ug/kg	
156-59-2	cis-1,2-Dichloroethylene	ND	4.4	1.3	ug/kg	
10061-01-5	cis-1,3-Dichloropropene	ND	4.4	0.87	ug/kg	
1476-11-5	cis-1,4-Dichloro-2-Butene	ND	22	4.4	ug/kg	
541-73-1	m-Dichlorobenzene	ND	4.4	1.0	ug/kg	
95-50-1	o-Dichlorobenzene	ND	4.4	0.96	ug/kg	
106-46-7	p-Dichlorobenzene	ND	4.4	0.96	ug/kg	
156-60-5	trans-1,2-Dichloroethylene	ND	4.4	1.3	ug/kg	
10061-02-6	trans-1,3-Dichloropropene	ND	4.4	0.96	ug/kg	
100-41-4	Ethylbenzene	ND	4.4	0.87	ug/kg	
97-63-2	Ethyl methacrylate	ND	22	4.4	ug/kg	
76-13-1	Freon 113	ND	4.4	1.5	ug/kg	
591-78-6	2-Hexanone	ND	22	4.7	ug/kg	
87-68-3	Hexachlorobutadiene	ND	4.4	1.7	ug/kg	
110-54-3	Hexane	ND	4.4	1.7	ug/kg	
98-82-8	Isopropylbenzene	ND	4.4	0.96	ug/kg	
99-87-6	p-Isopropyltoluene	ND	4.4	1.0	ug/kg	
108-10-1	4-Methyl-2-pentanone	ND	22	4.8	ug/kg	
126-98-7	Methacrylonitrile	ND	22	8.0	ug/kg	
74-83-9	Methyl bromide	ND	4.4	1.7	ug/kg	
74-87-3	Methyl chloride	ND	4.4	1.7	ug/kg	
74-88-4	Methyl iodide	ND	8.7	0.96	ug/kg	
80-62-6	Methyl methacrylate	ND	4.4	1.6	ug/kg	
74-95-3	Methylene bromide	ND	4.4	1.3	ug/kg	
75-09-2	Methylene chloride [a]	4.6	8.7	4.0	ug/kg	J
78-93-3	Methyl ethyl ketone	ND	22	5.3	ug/kg	
1634-04-4	Methyl Tert Butyl Ether	ND	4.4	1.7	ug/kg	
91-20-3	Naphthalene	ND	4.4	1.7	ug/kg	
76-01-7	Pentachloroethane	ND	22	4.4	ug/kg	
107-12-0	Propionitrile	ND	44	14	ug/kg	
103-65-1	n-Propylbenzene	ND	4.4	1.2	ug/kg	
100-42-5	Styrene	ND	4.4	2.3	ug/kg	
630-20-6	1,1,1,2-Tetrachloroethane	ND	4.4	0.87	ug/kg	
71-55-6	1,1,1-Trichloroethane	ND	4.4	0.96	ug/kg	
79-34-5	1,1,2,2-Tetrachloroethane	ND	4.4	1.0	ug/kg	
79-00-5	1,1,2-Trichloroethane	ND	4.4	0.96	ug/kg	
87-61-6	1,2,3-Trichlorobenzene	ND	4.4	0.87	ug/kg	
96-18-4	1,2,3-Trichloropropane	ND	4.4	1.5	ug/kg	
120-82-1	1,2,4-Trichlorobenzene	ND	4.4	1.0	ug/kg	

ND = Not detected MDL - Method Detection Limit
RL = Reporting Limit
E = Indicates value exceeds calibration range

J = Indicates an estimated value
B = Indicates analyte found in associated method blank
N = Indicates presumptive evidence of a compound

Report of Analysis

Client Sample ID:	SS39-DPT-03B		
Lab Sample ID:	F77899-8	**Date Sampled:**	11/08/10
Matrix:	SO - Soil	**Date Received:**	11/09/10
Method:	SW846 8260B	**Percent Solids:**	76.3
Project:	Holloman AFB; Alamogordo, NM		

VOA Special List

CAS No.	Compound	Result	RL	MDL	Units	Q
95-63-6	1,2,4-Trimethylbenzene	ND	4.4	0.96	ug/kg	
108-67-8	1,3,5-Trimethylbenzene	ND	4.4	1.1	ug/kg	
127-18-4	Tetrachloroethylene	ND	4.4	0.87	ug/kg	
108-88-3	Toluene	ND	4.4	1.0	ug/kg	
79-01-6	Trichloroethylene	ND	4.4	1.0	ug/kg	
75-69-4	Trichlorofluoromethane	ND	4.4	1.7	ug/kg	
110-57-6	Trans-1,4-Dichloro-2-Butene	ND	22	4.4	ug/kg	
75-01-4	Vinyl chloride	ND	4.4	1.3	ug/kg	
108-05-4	Vinyl Acetate	ND	22	12	ug/kg	
	m,p-Xylene	ND	8.7	1.9	ug/kg	
95-47-6	o-Xylene	ND	4.4	0.87	ug/kg	

CAS No.	Surrogate Recoveries	Run# 1	Run# 2	Limits
1868-53-7	Dibromofluoromethane	115%		80-121%
2037-26-5	Toluene-D8	93%		71-130%
460-00-4	4-Bromofluorobenzene	96%		59-148%
17060-07-0	1,2-Dichloroethane-D4	111%		77-123%

(a) Suspected laboratory contaminant.

ND = Not detected MDL - Method Detection Limit
RL = Reporting Limit
E = Indicates value exceeds calibration range

J = Indicates an estimated value
B = Indicates analyte found in associated method blank
N = Indicates presumptive evidence of a compound

Report of Analysis

Client Sample ID:	SS39-DPT-03B		
Lab Sample ID:	F77899-8	**Date Sampled:**	11/08/10
Matrix:	SO - Soil	**Date Received:**	11/09/10
Method:	SW846 8015C	**Percent Solids:**	76.3
Project:	Holloman AFB; Alamogordo, NM		

	File ID	DF	Analyzed	By	Prep Date	Prep Batch	Analytical Batch
Run #1	QR056652.D	1	11/12/10	AH	n/a	n/a	GQR2466
Run #2							

	Initial Weight	Final Volume	Methanol Aliquot
Run #1	6.38 g	5.0 ml	100 ul
Run #2			

CAS No.	Compound	Result	RL	MDL	Units	Q
	TPH-GRO (C6-C10)	ND	6.7	3.3	mg/kg	

CAS No.	Surrogate Recoveries	Run# 1	Run# 2	Limits
460-00-4	4-Bromofluorobenzene	86%		56-136%
98-08-8	aaa-Trifluorotoluene	77%		61-121%

ND = Not detected MDL - Method Detection Limit
RL = Reporting Limit
E = Indicates value exceeds calibration range

J = Indicates an estimated value
B = Indicates analyte found in associated method blank
N = Indicates presumptive evidence of a compound

Report of Analysis

Client Sample ID:	SS39-DPT-03B		
Lab Sample ID:	F77899-8	**Date Sampled:**	11/08/10
Matrix:	SO - Soil	**Date Received:**	11/09/10
Method:	SW846 8015C SW846 3550C	**Percent Solids:**	76.3
Project:	Holloman AFB; Alamogordo, NM		

	File ID	DF	Analyzed	By	Prep Date	Prep Batch	Analytical Batch
Run #1	YY18801.D	1	11/20/10	MV	11/11/10	OP35013	GYY677
Run #2							

	Initial Weight	Final Volume
Run #1	30.4 g	1.0 ml
Run #2		

CAS No.	Compound	Result	RL	MDL	Units	Q
	TPH (C10-C28)	ND	11	4.3	mg/kg	

CAS No.	Surrogate Recoveries	Run# 1	Run# 2	Limits
84-15-1	o-Terphenyl	88%		49-108%

ND = Not detected MDL - Method Detection Limit
RL = Reporting Limit
E = Indicates value exceeds calibration range

J = Indicates an estimated value
B = Indicates analyte found in associated method blank
N = Indicates presumptive evidence of a compound

Report of Analysis

Client Sample ID:	SS39-DPT-03C		
Lab Sample ID:	F77899-9	**Date Sampled:**	11/08/10
Matrix:	SO - Soil	**Date Received:**	11/09/10
Method:	SW846 8260B	**Percent Solids:**	76.6
Project:	Holloman AFB; Alamogordo, NM		

	File ID	DF	Analyzed	By	Prep Date	Prep Batch	Analytical Batch
Run #1	G0068417.D	1	11/15/10	MM	n/a	n/a	VG2578
Run #2							

	Initial Weight
Run #1	7.10 g
Run #2	

VOA Special List

CAS No.	Compound	Result	RL	MDL	Units	Q
67-64-1	Acetone	ND	46	18	ug/kg	
75-05-8	Acetonitrile	ND	46	17	ug/kg	
107-02-8	Acrolein	ND	23	10	ug/kg	
107-13-1	Acrylonitrile	ND	23	10	ug/kg	
107-05-1	Allyl chloride	ND	23	4.6	ug/kg	
71-43-2	Benzene	ND	4.6	1.4	ug/kg	
100-44-7	Benzyl Chloride	ND	4.6	1.4	ug/kg	
108-86-1	Bromobenzene	ND	4.6	1.3	ug/kg	
74-97-5	Bromochloromethane	ND	4.6	1.3	ug/kg	
75-27-4	Bromodichloromethane	ND	4.6	1.0	ug/kg	
75-25-2	Bromoform	ND	4.6	1.4	ug/kg	
104-51-8	n-Butylbenzene	ND	4.6	1.2	ug/kg	
135-98-8	sec-Butylbenzene	ND	4.6	1.5	ug/kg	
98-06-6	tert-Butylbenzene	ND	4.6	1.1	ug/kg	
108-90-7	Chlorobenzene	ND	4.6	0.92	ug/kg	
75-00-3	Chloroethane	ND	4.6	1.8	ug/kg	
67-66-3	Chloroform	ND	4.6	1.1	ug/kg	
544-10-5	1-Chlorohexane	ND	4.6	1.3	ug/kg	
95-49-8	o-Chlorotoluene	ND	4.6	1.1	ug/kg	
106-43-4	p-Chlorotoluene	ND	4.6	1.1	ug/kg	
110-75-8	2-Chloroethyl vinyl ether	ND	23	9.2	ug/kg	
75-15-0	Carbon disulfide	ND	4.6	1.8	ug/kg	
56-23-5	Carbon tetrachloride	ND	4.6	1.7	ug/kg	
75-34-3	1,1-Dichloroethane	ND	4.6	1.0	ug/kg	
75-35-4	1,1-Dichloroethylene	ND	4.6	1.3	ug/kg	
563-58-6	1,1-Dichloropropene	ND	4.6	1.2	ug/kg	
96-12-8	1,2-Dibromo-3-chloropropane	ND	4.6	2.1	ug/kg	
106-93-4	1,2-Dibromoethane	ND	4.6	0.92	ug/kg	
107-06-2	1,2-Dichloroethane	ND	4.6	0.92	ug/kg	
78-87-5	1,2-Dichloropropane	ND	4.6	1.1	ug/kg	
142-28-9	1,3-Dichloropropane	ND	4.6	0.92	ug/kg	
594-20-7	2,2-Dichloropropane	ND	4.6	1.3	ug/kg	

ND = Not detected MDL - Method Detection Limit
RL = Reporting Limit
E = Indicates value exceeds calibration range

J = Indicates an estimated value
B = Indicates analyte found in associated method blank
N = Indicates presumptive evidence of a compound

Report of Analysis

Client Sample ID:	SS39-DPT-03C		
Lab Sample ID:	F77899-9	**Date Sampled:**	11/08/10
Matrix:	SO - Soil	**Date Received:**	11/09/10
Method:	SW846 8260B	**Percent Solids:**	76.6
Project:	Holloman AFB; Alamogordo, NM		

VOA Special List

CAS No.	Compound	Result	RL	MDL	Units	Q
124-48-1	Dibromochloromethane	ND	4.6	0.92	ug/kg	
75-71-8	Dichlorodifluoromethane	ND	4.6	1.4	ug/kg	
156-59-2	cis-1,2-Dichloroethylene	ND	4.6	1.4	ug/kg	
10061-01-5	cis-1,3-Dichloropropene	ND	4.6	0.92	ug/kg	
1476-11-5	cis-1,4-Dichloro-2-Butene	ND	23	4.6	ug/kg	
541-73-1	m-Dichlorobenzene	ND	4.6	1.1	ug/kg	
95-50-1	o-Dichlorobenzene	ND	4.6	1.0	ug/kg	
106-46-7	p-Dichlorobenzene	ND	4.6	1.0	ug/kg	
156-60-5	trans-1,2-Dichloroethylene	ND	4.6	1.4	ug/kg	
10061-02-6	trans-1,3-Dichloropropene	ND	4.6	1.0	ug/kg	
100-41-4	Ethylbenzene	ND	4.6	0.92	ug/kg	
97-63-2	Ethyl methacrylate	ND	23	4.6	ug/kg	
76-13-1	Freon 113	ND	4.6	1.6	ug/kg	
591-78-6	2-Hexanone	ND	23	5.0	ug/kg	
87-68-3	Hexachlorobutadiene	ND	4.6	1.8	ug/kg	
110-54-3	Hexane	ND	4.6	1.7	ug/kg	
98-82-8	Isopropylbenzene	ND	4.6	1.0	ug/kg	
99-87-6	p-Isopropyltoluene	ND	4.6	1.1	ug/kg	
108-10-1	4-Methyl-2-pentanone	ND	23	5.1	ug/kg	
126-98-7	Methacrylonitrile	ND	23	8.5	ug/kg	
74-83-9	Methyl bromide	ND	4.6	1.8	ug/kg	
74-87-3	Methyl chloride	ND	4.6	1.8	ug/kg	
74-88-4	Methyl iodide	ND	9.2	1.0	ug/kg	
80-62-6	Methyl methacrylate	ND	4.6	1.7	ug/kg	
74-95-3	Methylene bromide	ND	4.6	1.4	ug/kg	
75-09-2	Methylene chloride [a]	8.0	9.2	4.2	ug/kg	J
78-93-3	Methyl ethyl ketone	ND	23	5.6	ug/kg	
1634-04-4	Methyl Tert Butyl Ether	ND	4.6	1.8	ug/kg	
91-20-3	Naphthalene	ND	4.6	1.8	ug/kg	
76-01-7	Pentachloroethane	ND	23	4.6	ug/kg	
107-12-0	Propionitrile	ND	46	15	ug/kg	
103-65-1	n-Propylbenzene	ND	4.6	1.3	ug/kg	
100-42-5	Styrene	ND	4.6	2.4	ug/kg	
630-20-6	1,1,1,2-Tetrachloroethane	ND	4.6	0.92	ug/kg	
71-55-6	1,1,1-Trichloroethane	ND	4.6	1.0	ug/kg	
79-34-5	1,1,2,2-Tetrachloroethane	ND	4.6	1.1	ug/kg	
79-00-5	1,1,2-Trichloroethane	ND	4.6	1.0	ug/kg	
87-61-6	1,2,3-Trichlorobenzene	ND	4.6	0.92	ug/kg	
96-18-4	1,2,3-Trichloropropane	ND	4.6	1.6	ug/kg	
120-82-1	1,2,4-Trichlorobenzene	ND	4.6	1.1	ug/kg	

ND = Not detected MDL - Method Detection Limit
RL = Reporting Limit
E = Indicates value exceeds calibration range

J = Indicates an estimated value
B = Indicates analyte found in associated method blank
N = Indicates presumptive evidence of a compound

Report of Analysis

Client Sample ID:	SS39-DPT-03C		
Lab Sample ID:	F77899-9	**Date Sampled:**	11/08/10
Matrix:	SO - Soil	**Date Received:**	11/09/10
Method:	SW846 8260B	**Percent Solids:**	76.6
Project:	Holloman AFB; Alamogordo, NM		

VOA Special List

CAS No.	Compound	Result	RL	MDL	Units	Q
95-63-6	1,2,4-Trimethylbenzene	ND	4.6	1.0	ug/kg	
108-67-8	1,3,5-Trimethylbenzene	ND	4.6	1.2	ug/kg	
127-18-4	Tetrachloroethylene	ND	4.6	0.92	ug/kg	
108-88-3	Toluene	ND	4.6	1.1	ug/kg	
79-01-6	Trichloroethylene	ND	4.6	1.1	ug/kg	
75-69-4	Trichlorofluoromethane	ND	4.6	1.8	ug/kg	
110-57-6	Trans-1,4-Dichloro-2-Butene	ND	23	4.6	ug/kg	
75-01-4	Vinyl chloride	ND	4.6	1.4	ug/kg	
108-05-4	Vinyl Acetate	ND	23	13	ug/kg	
	m,p-Xylene	ND	9.2	2.0	ug/kg	
95-47-6	o-Xylene	ND	4.6	0.92	ug/kg	

CAS No.	Surrogate Recoveries	Run# 1	Run# 2	Limits
1868-53-7	Dibromofluoromethane	109%		80-121%
2037-26-5	Toluene-D8	100%		71-130%
460-00-4	4-Bromofluorobenzene	93%		59-148%
17060-07-0	1,2-Dichloroethane-D4	108%		77-123%

(a) Suspected laboratory contaminant.

ND = Not detected MDL - Method Detection Limit
RL = Reporting Limit
E = Indicates value exceeds calibration range

J = Indicates an estimated value
B = Indicates analyte found in associated method blank
N = Indicates presumptive evidence of a compound

Report of Analysis

Client Sample ID:	SS39-DPT-03C		
Lab Sample ID:	F77899-9	**Date Sampled:**	11/08/10
Matrix:	SO - Soil	**Date Received:**	11/09/10
Method:	SW846 8015C	**Percent Solids:**	76.6
Project:	Holloman AFB; Alamogordo, NM		

	File ID	DF	Analyzed	By	Prep Date	Prep Batch	Analytical Batch
Run #1	QR056653.D	1	11/12/10	AH	n/a	n/a	GQR2466
Run #2							

	Initial Weight	Final Volume	Methanol Aliquot
Run #1	6.98 g	5.0 ml	100 ul
Run #2			

CAS No.	Compound	Result	RL	MDL	Units	Q
	TPH-GRO (C6-C10)	ND	6.2	3.1	mg/kg	

CAS No.	Surrogate Recoveries	Run# 1	Run# 2	Limits
460-00-4	4-Bromofluorobenzene	85%		56-136%
98-08-8	aaa-Trifluorotoluene	78%		61-121%

ND = Not detected MDL - Method Detection Limit
RL = Reporting Limit
E = Indicates value exceeds calibration range

J = Indicates an estimated value
B = Indicates analyte found in associated method blank
N = Indicates presumptive evidence of a compound

Report of Analysis

Client Sample ID:	SS39-DPT-03C		
Lab Sample ID:	F77899-9	**Date Sampled:**	11/08/10
Matrix:	SO - Soil	**Date Received:**	11/09/10
Method:	SW846 8015C SW846 3550C	**Percent Solids:**	76.6
Project:	Holloman AFB; Alamogordo, NM		

	File ID	DF	Analyzed	By	Prep Date	Prep Batch	Analytical Batch
Run #1	YY18802.D	1	11/20/10	MV	11/11/10	OP35013	GYY677
Run #2							

	Initial Weight	Final Volume
Run #1	30.3 g	1.0 ml
Run #2		

CAS No.	Compound	Result	RL	MDL	Units	Q
	TPH (C10-C28)	ND	11	4.3	mg/kg	

CAS No.	Surrogate Recoveries	Run# 1	Run# 2	Limits
84-15-1	o-Terphenyl	96%		49-108%

ND = Not detected MDL - Method Detection Limit
RL = Reporting Limit
E = Indicates value exceeds calibration range

J = Indicates an estimated value
B = Indicates analyte found in associated method blank
N = Indicates presumptive evidence of a compound

Report of Analysis

Client Sample ID:	SS39-DPT-04A		
Lab Sample ID:	F77899-10	**Date Sampled:**	11/08/10
Matrix:	SO - Soil	**Date Received:**	11/09/10
Method:	SW846 8260B	**Percent Solids:**	72.8
Project:	Holloman AFB; Alamogordo, NM		

	File ID	DF	Analyzed	By	Prep Date	Prep Batch	Analytical Batch
Run #1	G0068418.D	1	11/15/10	MM	n/a	n/a	VG2578
Run #2							

	Initial Weight
Run #1	7.66 g
Run #2	

VOA Special List

CAS No.	Compound	Result	RL	MDL	Units	Q
67-64-1	Acetone [a]	123	45	18	ug/kg	
75-05-8	Acetonitrile	ND	45	16	ug/kg	
107-02-8	Acrolein	ND	22	9.9	ug/kg	
107-13-1	Acrylonitrile	ND	22	10	ug/kg	
107-05-1	Allyl chloride	ND	22	4.5	ug/kg	
71-43-2	Benzene	ND	4.5	1.3	ug/kg	
100-44-7	Benzyl Chloride	ND	4.5	1.3	ug/kg	
108-86-1	Bromobenzene	ND	4.5	1.3	ug/kg	
74-97-5	Bromochloromethane	ND	4.5	1.3	ug/kg	
75-27-4	Bromodichloromethane	ND	4.5	0.99	ug/kg	
75-25-2	Bromoform	ND	4.5	1.3	ug/kg	
104-51-8	n-Butylbenzene	ND	4.5	1.2	ug/kg	
135-98-8	sec-Butylbenzene	ND	4.5	1.4	ug/kg	
98-06-6	tert-Butylbenzene	ND	4.5	1.1	ug/kg	
108-90-7	Chlorobenzene	ND	4.5	0.90	ug/kg	
75-00-3	Chloroethane	ND	4.5	1.8	ug/kg	
67-66-3	Chloroform	ND	4.5	1.1	ug/kg	
544-10-5	1-Chlorohexane	ND	4.5	1.3	ug/kg	
95-49-8	o-Chlorotoluene	ND	4.5	1.1	ug/kg	
106-43-4	p-Chlorotoluene	ND	4.5	1.1	ug/kg	
110-75-8	2-Chloroethyl vinyl ether	ND	22	9.0	ug/kg	
75-15-0	Carbon disulfide	ND	4.5	1.8	ug/kg	
56-23-5	Carbon tetrachloride	ND	4.5	1.6	ug/kg	
75-34-3	1,1-Dichloroethane	ND	4.5	0.99	ug/kg	
75-35-4	1,1-Dichloroethylene	ND	4.5	1.3	ug/kg	
563-58-6	1,1-Dichloropropene	ND	4.5	1.2	ug/kg	
96-12-8	1,2-Dibromo-3-chloropropane	ND	4.5	2.1	ug/kg	
106-93-4	1,2-Dibromoethane	ND	4.5	0.90	ug/kg	
107-06-2	1,2-Dichloroethane	ND	4.5	0.90	ug/kg	
78-87-5	1,2-Dichloropropane	ND	4.5	1.1	ug/kg	
142-28-9	1,3-Dichloropropane	ND	4.5	0.90	ug/kg	
594-20-7	2,2-Dichloropropane	ND	4.5	1.3	ug/kg	

ND = Not detected MDL - Method Detection Limit
RL = Reporting Limit
E = Indicates value exceeds calibration range

J = Indicates an estimated value
B = Indicates analyte found in associated method blank
N = Indicates presumptive evidence of a compound

Report of Analysis

Client Sample ID:	SS39-DPT-04A		
Lab Sample ID:	F77899-10	**Date Sampled:**	11/08/10
Matrix:	SO - Soil	**Date Received:**	11/09/10
Method:	SW846 8260B	**Percent Solids:**	72.8
Project:	Holloman AFB; Alamogordo, NM		

VOA Special List

CAS No.	Compound	Result	RL	MDL	Units	Q
124-48-1	Dibromochloromethane	ND	4.5	0.90	ug/kg	
75-71-8	Dichlorodifluoromethane	ND	4.5	1.3	ug/kg	
156-59-2	cis-1,2-Dichloroethylene	ND	4.5	1.3	ug/kg	
10061-01-5	cis-1,3-Dichloropropene	ND	4.5	0.90	ug/kg	
1476-11-5	cis-1,4-Dichloro-2-Butene	ND	22	4.5	ug/kg	
541-73-1	m-Dichlorobenzene	ND	4.5	1.1	ug/kg	
95-50-1	o-Dichlorobenzene	ND	4.5	0.99	ug/kg	
106-46-7	p-Dichlorobenzene	ND	4.5	0.99	ug/kg	
156-60-5	trans-1,2-Dichloroethylene	ND	4.5	1.3	ug/kg	
10061-02-6	trans-1,3-Dichloropropene	ND	4.5	0.99	ug/kg	
100-41-4	Ethylbenzene	ND	4.5	0.90	ug/kg	
97-63-2	Ethyl methacrylate	ND	22	4.5	ug/kg	
76-13-1	Freon 113	ND	4.5	1.5	ug/kg	
591-78-6	2-Hexanone	ND	22	4.8	ug/kg	
87-68-3	Hexachlorobutadiene	ND	4.5	1.8	ug/kg	
110-54-3	Hexane	ND	4.5	1.7	ug/kg	
98-82-8	Isopropylbenzene	ND	4.5	0.99	ug/kg	
99-87-6	p-Isopropyltoluene	ND	4.5	1.1	ug/kg	
108-10-1	4-Methyl-2-pentanone	ND	22	4.9	ug/kg	
126-98-7	Methacrylonitrile	ND	22	8.2	ug/kg	
74-83-9	Methyl bromide	ND	4.5	1.8	ug/kg	
74-87-3	Methyl chloride	ND	4.5	1.8	ug/kg	
74-88-4	Methyl iodide	ND	9.0	0.99	ug/kg	
80-62-6	Methyl methacrylate	ND	4.5	1.6	ug/kg	
74-95-3	Methylene bromide	ND	4.5	1.3	ug/kg	
75-09-2	Methylene chloride [b]	12.3	9.0	4.1	ug/kg	
78-93-3	Methyl ethyl ketone	ND	22	5.5	ug/kg	
1634-04-4	Methyl Tert Butyl Ether	ND	4.5	1.8	ug/kg	
91-20-3	Naphthalene	ND	4.5	1.8	ug/kg	
76-01-7	Pentachloroethane	ND	22	4.5	ug/kg	
107-12-0	Propionitrile	ND	45	14	ug/kg	
103-65-1	n-Propylbenzene	ND	4.5	1.3	ug/kg	
100-42-5	Styrene	ND	4.5	2.3	ug/kg	
630-20-6	1,1,1,2-Tetrachloroethane	ND	4.5	0.90	ug/kg	
71-55-6	1,1,1-Trichloroethane	ND	4.5	0.99	ug/kg	
79-34-5	1,1,2,2-Tetrachloroethane	ND	4.5	1.1	ug/kg	
79-00-5	1,1,2-Trichloroethane	ND	4.5	0.99	ug/kg	
87-61-6	1,2,3-Trichlorobenzene	ND	4.5	0.90	ug/kg	
96-18-4	1,2,3-Trichloropropane	ND	4.5	1.5	ug/kg	
120-82-1	1,2,4-Trichlorobenzene	ND	4.5	1.1	ug/kg	

ND = Not detected MDL - Method Detection Limit
RL = Reporting Limit
E = Indicates value exceeds calibration range

J = Indicates an estimated value
B = Indicates analyte found in associated method blank
N = Indicates presumptive evidence of a compound

Report of Analysis

Client Sample ID:	SS39-DPT-04A		
Lab Sample ID:	F77899-10	**Date Sampled:**	11/08/10
Matrix:	SO - Soil	**Date Received:**	11/09/10
Method:	SW846 8260B	**Percent Solids:**	72.8
Project:	Holloman AFB; Alamogordo, NM		

VOA Special List

CAS No.	Compound	Result	RL	MDL	Units	Q
95-63-6	1,2,4-Trimethylbenzene	ND	4.5	0.99	ug/kg	
108-67-8	1,3,5-Trimethylbenzene	ND	4.5	1.2	ug/kg	
127-18-4	Tetrachloroethylene	ND	4.5	0.90	ug/kg	
108-88-3	Toluene	ND	4.5	1.1	ug/kg	
79-01-6	Trichloroethylene	ND	4.5	1.1	ug/kg	
75-69-4	Trichlorofluoromethane	ND	4.5	1.8	ug/kg	
110-57-6	Trans-1,4-Dichloro-2-Butene	ND	22	4.5	ug/kg	
75-01-4	Vinyl chloride	ND	4.5	1.3	ug/kg	
108-05-4	Vinyl Acetate	ND	22	12	ug/kg	
	m,p-Xylene	ND	9.0	2.0	ug/kg	
95-47-6	o-Xylene	ND	4.5	0.90	ug/kg	

CAS No.	Surrogate Recoveries	Run# 1	Run# 2	Limits
1868-53-7	Dibromofluoromethane	111%		80-121%
2037-26-5	Toluene-D8	96%		71-130%
460-00-4	4-Bromofluorobenzene	94%		59-148%
17060-07-0	1,2-Dichloroethane-D4	111%		77-123%

(a) ICV and BS outside of control limits.
(b) Suspected laboratory contaminant.

ND = Not detected MDL - Method Detection Limit
RL = Reporting Limit
E = Indicates value exceeds calibration range

J = Indicates an estimated value
B = Indicates analyte found in associated method blank
N = Indicates presumptive evidence of a compound

Report of Analysis

Client Sample ID:	SS39-DPT-04A		
Lab Sample ID:	F77899-10	**Date Sampled:**	11/08/10
Matrix:	SO - Soil	**Date Received:**	11/09/10
Method:	SW846 8015C	**Percent Solids:**	72.8
Project:	Holloman AFB; Alamogordo, NM		

	File ID	DF	Analyzed	By	Prep Date	Prep Batch	Analytical Batch
Run #1	QR056654.D	1	11/12/10	AH	n/a	n/a	GQR2466
Run #2							

	Initial Weight	Final Volume	Methanol Aliquot
Run #1	7.48 g	5.0 ml	100 ul
Run #2			

CAS No.	Compound	Result	RL	MDL	Units	Q
	TPH-GRO (C6-C10)	ND	6.5	3.2	mg/kg	

CAS No.	Surrogate Recoveries	Run# 1	Run# 2	Limits
460-00-4	4-Bromofluorobenzene	86%		56-136%
98-08-8	aaa-Trifluorotoluene	78%		61-121%

ND = Not detected MDL - Method Detection Limit
RL = Reporting Limit
E = Indicates value exceeds calibration range

J = Indicates an estimated value
B = Indicates analyte found in associated method blank
N = Indicates presumptive evidence of a compound

Report of Analysis

Client Sample ID:	SS39-DPT-04A		
Lab Sample ID:	F77899-10	**Date Sampled:**	11/08/10
Matrix:	SO - Soil	**Date Received:**	11/09/10
Method:	SW846 8015C SW846 3550C	**Percent Solids:**	72.8
Project:	Holloman AFB; Alamogordo, NM		

	File ID	DF	Analyzed	By	Prep Date	Prep Batch	Analytical Batch
Run #1	YY18803.D	1	11/20/10	MV	11/11/10	OP35013	GYY677
Run #2							

	Initial Weight	Final Volume
Run #1	30.5 g	1.0 ml
Run #2		

CAS No.	Compound	Result	RL	MDL	Units	Q
	TPH (C10-C28)	ND	11	4.5	mg/kg	

CAS No.	Surrogate Recoveries	Run# 1	Run# 2	Limits
84-15-1	o-Terphenyl	85%		49-108%

ND = Not detected MDL - Method Detection Limit
RL = Reporting Limit
E = Indicates value exceeds calibration range

J = Indicates an estimated value
B = Indicates analyte found in associated method blank
N = Indicates presumptive evidence of a compound

Report of Analysis

Client Sample ID:	SS39-DPT-04B		
Lab Sample ID:	F77899-11	**Date Sampled:**	11/08/10
Matrix:	SO - Soil	**Date Received:**	11/09/10
Method:	SW846 8260B	**Percent Solids:**	66.1
Project:	Holloman AFB; Alamogordo, NM		

	File ID	DF	Analyzed	By	Prep Date	Prep Batch	Analytical Batch
Run #1	G0068419.D	1	11/15/10	MM	n/a	n/a	VG2578
Run #2							

	Initial Weight
Run #1	8.19 g
Run #2	

VOA Special List

CAS No.	Compound	Result	RL	MDL	Units	Q
67-64-1	Acetone	ND	46	18	ug/kg	
75-05-8	Acetonitrile	ND	46	17	ug/kg	
107-02-8	Acrolein	ND	23	10	ug/kg	
107-13-1	Acrylonitrile	ND	23	11	ug/kg	
107-05-1	Allyl chloride	ND	23	4.6	ug/kg	
71-43-2	Benzene	ND	4.6	1.4	ug/kg	
100-44-7	Benzyl Chloride	ND	4.6	1.4	ug/kg	
108-86-1	Bromobenzene	ND	4.6	1.3	ug/kg	
74-97-5	Bromochloromethane	ND	4.6	1.3	ug/kg	
75-27-4	Bromodichloromethane	ND	4.6	1.0	ug/kg	
75-25-2	Bromoform	ND	4.6	1.4	ug/kg	
104-51-8	n-Butylbenzene	ND	4.6	1.2	ug/kg	
135-98-8	sec-Butylbenzene	ND	4.6	1.5	ug/kg	
98-06-6	tert-Butylbenzene	ND	4.6	1.1	ug/kg	
108-90-7	Chlorobenzene	ND	4.6	0.92	ug/kg	
75-00-3	Chloroethane	ND	4.6	1.8	ug/kg	
67-66-3	Chloroform	ND	4.6	1.1	ug/kg	
544-10-5	1-Chlorohexane	ND	4.6	1.3	ug/kg	
95-49-8	o-Chlorotoluene	ND	4.6	1.1	ug/kg	
106-43-4	p-Chlorotoluene	ND	4.6	1.1	ug/kg	
110-75-8	2-Chloroethyl vinyl ether	ND	23	9.2	ug/kg	
75-15-0	Carbon disulfide	ND	4.6	1.8	ug/kg	
56-23-5	Carbon tetrachloride	ND	4.6	1.7	ug/kg	
75-34-3	1,1-Dichloroethane	ND	4.6	1.0	ug/kg	
75-35-4	1,1-Dichloroethylene	ND	4.6	1.3	ug/kg	
563-58-6	1,1-Dichloropropene	ND	4.6	1.2	ug/kg	
96-12-8	1,2-Dibromo-3-chloropropane	ND	4.6	2.1	ug/kg	
106-93-4	1,2-Dibromoethane	ND	4.6	0.92	ug/kg	
107-06-2	1,2-Dichloroethane	ND	4.6	0.92	ug/kg	
78-87-5	1,2-Dichloropropane	ND	4.6	1.1	ug/kg	
142-28-9	1,3-Dichloropropane	ND	4.6	0.92	ug/kg	
594-20-7	2,2-Dichloropropane	ND	4.6	1.3	ug/kg	

ND = Not detected MDL - Method Detection Limit
RL = Reporting Limit
E = Indicates value exceeds calibration range

J = Indicates an estimated value
B = Indicates analyte found in associated method blank
N = Indicates presumptive evidence of a compound

Report of Analysis

Client Sample ID:	SS39-DPT-04B		
Lab Sample ID:	F77899-11	**Date Sampled:**	11/08/10
Matrix:	SO - Soil	**Date Received:**	11/09/10
Method:	SW846 8260B	**Percent Solids:**	66.1
Project:	Holloman AFB; Alamogordo, NM		

VOA Special List

CAS No.	Compound	Result	RL	MDL	Units	Q
124-48-1	Dibromochloromethane	ND	4.6	0.92	ug/kg	
75-71-8	Dichlorodifluoromethane	ND	4.6	1.4	ug/kg	
156-59-2	cis-1,2-Dichloroethylene	ND	4.6	1.4	ug/kg	
10061-01-5	cis-1,3-Dichloropropene	ND	4.6	0.92	ug/kg	
1476-11-5	cis-1,4-Dichloro-2-Butene	ND	23	4.6	ug/kg	
541-73-1	m-Dichlorobenzene	ND	4.6	1.1	ug/kg	
95-50-1	o-Dichlorobenzene	ND	4.6	1.0	ug/kg	
106-46-7	p-Dichlorobenzene	ND	4.6	1.0	ug/kg	
156-60-5	trans-1,2-Dichloroethylene	ND	4.6	1.4	ug/kg	
10061-02-6	trans-1,3-Dichloropropene	ND	4.6	1.0	ug/kg	
100-41-4	Ethylbenzene	ND	4.6	0.92	ug/kg	
97-63-2	Ethyl methacrylate	ND	23	4.6	ug/kg	
76-13-1	Freon 113	ND	4.6	1.6	ug/kg	
591-78-6	2-Hexanone	ND	23	5.0	ug/kg	
87-68-3	Hexachlorobutadiene	ND	4.6	1.8	ug/kg	
110-54-3	Hexane	ND	4.6	1.8	ug/kg	
98-82-8	Isopropylbenzene	ND	4.6	1.0	ug/kg	
99-87-6	p-Isopropyltoluene	ND	4.6	1.1	ug/kg	
108-10-1	4-Methyl-2-pentanone	ND	23	5.1	ug/kg	
126-98-7	Methacrylonitrile	ND	23	8.5	ug/kg	
74-83-9	Methyl bromide	ND	4.6	1.8	ug/kg	
74-87-3	Methyl chloride	ND	4.6	1.8	ug/kg	
74-88-4	Methyl iodide	ND	9.2	1.0	ug/kg	
80-62-6	Methyl methacrylate	ND	4.6	1.7	ug/kg	
74-95-3	Methylene bromide	ND	4.6	1.4	ug/kg	
75-09-2	Methylene chloride [a]	4.7	9.2	4.2	ug/kg	J
78-93-3	Methyl ethyl ketone	ND	23	5.6	ug/kg	
1634-04-4	Methyl Tert Butyl Ether	ND	4.6	1.8	ug/kg	
91-20-3	Naphthalene	ND	4.6	1.8	ug/kg	
76-01-7	Pentachloroethane	ND	23	4.6	ug/kg	
107-12-0	Propionitrile	ND	46	15	ug/kg	
103-65-1	n-Propylbenzene	ND	4.6	1.3	ug/kg	
100-42-5	Styrene	ND	4.6	2.4	ug/kg	
630-20-6	1,1,1,2-Tetrachloroethane	ND	4.6	0.92	ug/kg	
71-55-6	1,1,1-Trichloroethane	ND	4.6	1.0	ug/kg	
79-34-5	1,1,2,2-Tetrachloroethane	ND	4.6	1.1	ug/kg	
79-00-5	1,1,2-Trichloroethane	ND	4.6	1.0	ug/kg	
87-61-6	1,2,3-Trichlorobenzene	ND	4.6	0.92	ug/kg	
96-18-4	1,2,3-Trichloropropane	ND	4.6	1.6	ug/kg	
120-82-1	1,2,4-Trichlorobenzene	ND	4.6	1.1	ug/kg	

ND = Not detected MDL - Method Detection Limit
RL = Reporting Limit
E = Indicates value exceeds calibration range

J = Indicates an estimated value
B = Indicates analyte found in associated method blank
N = Indicates presumptive evidence of a compound

Report of Analysis

Client Sample ID:	SS39-DPT-04B		
Lab Sample ID:	F77899-11	**Date Sampled:**	11/08/10
Matrix:	SO - Soil	**Date Received:**	11/09/10
Method:	SW846 8260B	**Percent Solids:**	66.1
Project:	Holloman AFB; Alamogordo, NM		

VOA Special List

CAS No.	Compound	Result	RL	MDL	Units	Q
95-63-6	1,2,4-Trimethylbenzene	ND	4.6	1.0	ug/kg	
108-67-8	1,3,5-Trimethylbenzene	ND	4.6	1.2	ug/kg	
127-18-4	Tetrachloroethylene	ND	4.6	0.92	ug/kg	
108-88-3	Toluene	ND	4.6	1.1	ug/kg	
79-01-6	Trichloroethylene	9.8	4.6	1.1	ug/kg	
75-69-4	Trichlorofluoromethane	ND	4.6	1.8	ug/kg	
110-57-6	Trans-1,4-Dichloro-2-Butene	ND	23	4.6	ug/kg	
75-01-4	Vinyl chloride	ND	4.6	1.4	ug/kg	
108-05-4	Vinyl Acetate	ND	23	13	ug/kg	
	m,p-Xylene	ND	9.2	2.0	ug/kg	
95-47-6	o-Xylene	ND	4.6	0.92	ug/kg	

CAS No.	Surrogate Recoveries	Run# 1	Run# 2	Limits
1868-53-7	Dibromofluoromethane	113%		80-121%
2037-26-5	Toluene-D8	95%		71-130%
460-00-4	4-Bromofluorobenzene	100%		59-148%
17060-07-0	1,2-Dichloroethane-D4	107%		77-123%

(a) Suspected laboratory contaminant.

ND = Not detected MDL - Method Detection Limit
RL = Reporting Limit
E = Indicates value exceeds calibration range

J = Indicates an estimated value
B = Indicates analyte found in associated method blank
N = Indicates presumptive evidence of a compound

Report of Analysis

Client Sample ID:	SS39-DPT-04B		
Lab Sample ID:	F77899-11	**Date Sampled:**	11/08/10
Matrix:	SO - Soil	**Date Received:**	11/09/10
Method:	SW846 8015C	**Percent Solids:**	66.1
Project:	Holloman AFB; Alamogordo, NM		

	File ID	DF	Analyzed	By	Prep Date	Prep Batch	Analytical Batch
Run #1	QR056655.D	1	11/12/10	AH	n/a	n/a	GQR2466
Run #2							

	Initial Weight	Final Volume	Methanol Aliquot
Run #1	7.77 g	5.0 ml	100 ul
Run #2			

CAS No.	Compound	Result	RL	MDL	Units	Q
	TPH-GRO (C6-C10)	ND	7.4	3.7	mg/kg	

CAS No.	Surrogate Recoveries	Run# 1	Run# 2	Limits
460-00-4	4-Bromofluorobenzene	85%		56-136%
98-08-8	aaa-Trifluorotoluene	79%		61-121%

ND = Not detected MDL - Method Detection Limit
RL = Reporting Limit
E = Indicates value exceeds calibration range

J = Indicates an estimated value
B = Indicates analyte found in associated method blank
N = Indicates presumptive evidence of a compound

Report of Analysis

Client Sample ID:	SS39-DPT-04B		
Lab Sample ID:	F77899-11	**Date Sampled:**	11/08/10
Matrix:	SO - Soil	**Date Received:**	11/09/10
Method:	SW846 8015C SW846 3550C	**Percent Solids:**	66.1
Project:	Holloman AFB; Alamogordo, NM		

	File ID	DF	Analyzed	By	Prep Date	Prep Batch	Analytical Batch
Run #1	YY18804.D	1	11/20/10	MV	11/11/10	OP35013	GYY677
Run #2							

	Initial Weight	Final Volume
Run #1	30.1 g	1.0 ml
Run #2		

CAS No.	Compound	Result	RL	MDL	Units	Q
	TPH (C10-C28)	ND	13	5.0	mg/kg	

CAS No.	Surrogate Recoveries	Run# 1	Run# 2	Limits
84-15-1	o-Terphenyl	96%		49-108%

ND = Not detected MDL - Method Detection Limit
RL = Reporting Limit
E = Indicates value exceeds calibration range

J = Indicates an estimated value
B = Indicates analyte found in associated method blank
N = Indicates presumptive evidence of a compound

Report of Analysis

Client Sample ID:	SS39-DPT-04C		
Lab Sample ID:	F77899-12	**Date Sampled:**	11/08/10
Matrix:	SO - Soil	**Date Received:**	11/09/10
Method:	SW846 8260B	**Percent Solids:**	73.1
Project:	Holloman AFB; Alamogordo, NM		

	File ID	DF	Analyzed	By	Prep Date	Prep Batch	Analytical Batch
Run #1	G0068420.D	1	11/15/10	MM	n/a	n/a	VG2578
Run #2							

	Initial Weight
Run #1	8.32 g
Run #2	

VOA Special List

CAS No.	Compound	Result	RL	MDL	Units	Q
67-64-1	Acetone	ND	41	16	ug/kg	
75-05-8	Acetonitrile	ND	41	15	ug/kg	
107-02-8	Acrolein	ND	21	9.0	ug/kg	
107-13-1	Acrylonitrile	ND	21	9.4	ug/kg	
107-05-1	Allyl chloride	ND	21	4.1	ug/kg	
71-43-2	Benzene	ND	4.1	1.2	ug/kg	
100-44-7	Benzyl Chloride	ND	4.1	1.2	ug/kg	
108-86-1	Bromobenzene	ND	4.1	1.2	ug/kg	
74-97-5	Bromochloromethane	ND	4.1	1.2	ug/kg	
75-27-4	Bromodichloromethane	ND	4.1	0.90	ug/kg	
75-25-2	Bromoform	ND	4.1	1.2	ug/kg	
104-51-8	n-Butylbenzene	ND	4.1	1.1	ug/kg	
135-98-8	sec-Butylbenzene	ND	4.1	1.3	ug/kg	
98-06-6	tert-Butylbenzene	ND	4.1	0.99	ug/kg	
108-90-7	Chlorobenzene	ND	4.1	0.82	ug/kg	
75-00-3	Chloroethane	ND	4.1	1.6	ug/kg	
67-66-3	Chloroform	ND	4.1	0.99	ug/kg	
544-10-5	1-Chlorohexane	ND	4.1	1.2	ug/kg	
95-49-8	o-Chlorotoluene	ND	4.1	0.99	ug/kg	
106-43-4	p-Chlorotoluene	ND	4.1	0.99	ug/kg	
110-75-8	2-Chloroethyl vinyl ether	ND	21	8.2	ug/kg	
75-15-0	Carbon disulfide	ND	4.1	1.6	ug/kg	
56-23-5	Carbon tetrachloride	ND	4.1	1.5	ug/kg	
75-34-3	1,1-Dichloroethane	ND	4.1	0.90	ug/kg	
75-35-4	1,1-Dichloroethylene	ND	4.1	1.2	ug/kg	
563-58-6	1,1-Dichloropropene	ND	4.1	1.1	ug/kg	
96-12-8	1,2-Dibromo-3-chloropropane	ND	4.1	1.9	ug/kg	
106-93-4	1,2-Dibromoethane	ND	4.1	0.82	ug/kg	
107-06-2	1,2-Dichloroethane	ND	4.1	0.82	ug/kg	
78-87-5	1,2-Dichloropropane	ND	4.1	0.99	ug/kg	
142-28-9	1,3-Dichloropropane	ND	4.1	0.82	ug/kg	
594-20-7	2,2-Dichloropropane	ND	4.1	1.2	ug/kg	

ND = Not detected MDL - Method Detection Limit
RL = Reporting Limit
E = Indicates value exceeds calibration range

J = Indicates an estimated value
B = Indicates analyte found in associated method blank
N = Indicates presumptive evidence of a compound

Report of Analysis

Client Sample ID:	SS39-DPT-04C		
Lab Sample ID:	F77899-12	**Date Sampled:**	11/08/10
Matrix:	SO - Soil	**Date Received:**	11/09/10
Method:	SW846 8260B	**Percent Solids:**	73.1
Project:	Holloman AFB; Alamogordo, NM		

VOA Special List

CAS No.	Compound	Result	RL	MDL	Units	Q
124-48-1	Dibromochloromethane	ND	4.1	0.82	ug/kg	
75-71-8	Dichlorodifluoromethane	ND	4.1	1.2	ug/kg	
156-59-2	cis-1,2-Dichloroethylene	ND	4.1	1.2	ug/kg	
10061-01-5	cis-1,3-Dichloropropene	ND	4.1	0.82	ug/kg	
1476-11-5	cis-1,4-Dichloro-2-Butene	ND	21	4.1	ug/kg	
541-73-1	m-Dichlorobenzene	ND	4.1	0.99	ug/kg	
95-50-1	o-Dichlorobenzene	ND	4.1	0.90	ug/kg	
106-46-7	p-Dichlorobenzene	ND	4.1	0.90	ug/kg	
156-60-5	trans-1,2-Dichloroethylene	ND	4.1	1.2	ug/kg	
10061-02-6	trans-1,3-Dichloropropene	ND	4.1	0.90	ug/kg	
100-41-4	Ethylbenzene	ND	4.1	0.82	ug/kg	
97-63-2	Ethyl methacrylate	ND	21	4.1	ug/kg	
76-13-1	Freon 113	ND	4.1	1.4	ug/kg	
591-78-6	2-Hexanone	ND	21	4.4	ug/kg	
87-68-3	Hexachlorobutadiene	ND	4.1	1.6	ug/kg	
110-54-3	Hexane	ND	4.1	1.6	ug/kg	
98-82-8	Isopropylbenzene	ND	4.1	0.90	ug/kg	
99-87-6	p-Isopropyltoluene	ND	4.1	0.99	ug/kg	
108-10-1	4-Methyl-2-pentanone	ND	21	4.5	ug/kg	
126-98-7	Methacrylonitrile	ND	21	7.6	ug/kg	
74-83-9	Methyl bromide	ND	4.1	1.6	ug/kg	
74-87-3	Methyl chloride	ND	4.1	1.6	ug/kg	
74-88-4	Methyl iodide	ND	8.2	0.90	ug/kg	
80-62-6	Methyl methacrylate	ND	4.1	1.5	ug/kg	
74-95-3	Methylene bromide	ND	4.1	1.2	ug/kg	
75-09-2	Methylene chloride [a]	6.3	8.2	3.8	ug/kg	J
78-93-3	Methyl ethyl ketone	ND	21	5.0	ug/kg	
1634-04-4	Methyl Tert Butyl Ether	ND	4.1	1.6	ug/kg	
91-20-3	Naphthalene	ND	4.1	1.6	ug/kg	
76-01-7	Pentachloroethane	ND	21	4.1	ug/kg	
107-12-0	Propionitrile	ND	41	13	ug/kg	
103-65-1	n-Propylbenzene	ND	4.1	1.2	ug/kg	
100-42-5	Styrene	ND	4.1	2.1	ug/kg	
630-20-6	1,1,1,2-Tetrachloroethane	ND	4.1	0.82	ug/kg	
71-55-6	1,1,1-Trichloroethane	ND	4.1	0.90	ug/kg	
79-34-5	1,1,2,2-Tetrachloroethane	ND	4.1	0.99	ug/kg	
79-00-5	1,1,2-Trichloroethane	ND	4.1	0.90	ug/kg	
87-61-6	1,2,3-Trichlorobenzene	ND	4.1	0.82	ug/kg	
96-18-4	1,2,3-Trichloropropane	ND	4.1	1.4	ug/kg	
120-82-1	1,2,4-Trichlorobenzene	ND	4.1	0.99	ug/kg	

ND = Not detected MDL - Method Detection Limit
RL = Reporting Limit
E = Indicates value exceeds calibration range

J = Indicates an estimated value
B = Indicates analyte found in associated method blank
N = Indicates presumptive evidence of a compound

Report of Analysis

Client Sample ID:	SS39-DPT-04C		
Lab Sample ID:	F77899-12	**Date Sampled:**	11/08/10
Matrix:	SO - Soil	**Date Received:**	11/09/10
Method:	SW846 8260B	**Percent Solids:**	73.1
Project:	Holloman AFB; Alamogordo, NM		

VOA Special List

CAS No.	Compound	Result	RL	MDL	Units	Q
95-63-6	1,2,4-Trimethylbenzene	ND	4.1	0.90	ug/kg	
108-67-8	1,3,5-Trimethylbenzene	ND	4.1	1.1	ug/kg	
127-18-4	Tetrachloroethylene	ND	4.1	0.82	ug/kg	
108-88-3	Toluene	ND	4.1	0.99	ug/kg	
79-01-6	Trichloroethylene	3.0	4.1	0.99	ug/kg	J
75-69-4	Trichlorofluoromethane	ND	4.1	1.6	ug/kg	
110-57-6	Trans-1,4-Dichloro-2-Butene	ND	21	4.1	ug/kg	
75-01-4	Vinyl chloride	ND	4.1	1.2	ug/kg	
108-05-4	Vinyl Acetate	ND	21	11	ug/kg	
	m,p-Xylene	ND	8.2	1.8	ug/kg	
95-47-6	o-Xylene	ND	4.1	0.82	ug/kg	

CAS No.	Surrogate Recoveries	Run# 1	Run# 2	Limits
1868-53-7	Dibromofluoromethane	116%		80-121%
2037-26-5	Toluene-D8	94%		71-130%
460-00-4	4-Bromofluorobenzene	89%		59-148%
17060-07-0	1,2-Dichloroethane-D4	120%		77-123%

(a) Suspected laboratory contaminant.

ND = Not detected MDL - Method Detection Limit
RL = Reporting Limit
E = Indicates value exceeds calibration range

J = Indicates an estimated value
B = Indicates analyte found in associated method blank
N = Indicates presumptive evidence of a compound

Report of Analysis

Client Sample ID:	SS39-DPT-04C		
Lab Sample ID:	F77899-12	**Date Sampled:**	11/08/10
Matrix:	SO - Soil	**Date Received:**	11/09/10
Method:	SW846 8015C	**Percent Solids:**	73.1
Project:	Holloman AFB; Alamogordo, NM		

	File ID	DF	Analyzed	By	Prep Date	Prep Batch	Analytical Batch
Run #1	QR056656.D	1	11/12/10	AH	n/a	n/a	GQR2466
Run #2							

	Initial Weight	Final Volume	Methanol Aliquot
Run #1	6.88 g	5.0 ml	100 ul
Run #2			

CAS No.	Compound	Result	RL	MDL	Units	Q
	TPH-GRO (C6-C10)	ND	6.8	3.4	mg/kg	

CAS No.	Surrogate Recoveries	Run# 1	Run# 2	Limits
460-00-4	4-Bromofluorobenzene	90%		56-136%
98-08-8	aaa-Trifluorotoluene	80%		61-121%

ND = Not detected MDL - Method Detection Limit
RL = Reporting Limit
E = Indicates value exceeds calibration range

J = Indicates an estimated value
B = Indicates analyte found in associated method blank
N = Indicates presumptive evidence of a compound

Report of Analysis

Client Sample ID:	SS39-DPT-04C		
Lab Sample ID:	F77899-12	**Date Sampled:**	11/08/10
Matrix:	SO - Soil	**Date Received:**	11/09/10
Method:	SW846 8015C SW846 3550C	**Percent Solids:**	73.1
Project:	Holloman AFB; Alamogordo, NM		

	File ID	DF	Analyzed	By	Prep Date	Prep Batch	Analytical Batch
Run #1	YY18805.D	1	11/20/10	MV	11/11/10	OP35013	GYY677
Run #2							

	Initial Weight	Final Volume
Run #1	30.3 g	1.0 ml
Run #2		

CAS No.	Compound	Result	RL	MDL	Units	Q
	TPH (C10-C28)	ND	11	4.5	mg/kg	

CAS No.	Surrogate Recoveries	Run# 1	Run# 2	Limits
84-15-1	o-Terphenyl	96%		49-108%

ND = Not detected MDL - Method Detection Limit
RL = Reporting Limit
E = Indicates value exceeds calibration range

J = Indicates an estimated value
B = Indicates analyte found in associated method blank
N = Indicates presumptive evidence of a compound

Report of Analysis

Client Sample ID:	SS39-DPT-15A		
Lab Sample ID:	F77899-13	**Date Sampled:**	11/08/10
Matrix:	SO - Soil	**Date Received:**	11/09/10
Method:	SW846 8260B	**Percent Solids:**	82.8
Project:	Holloman AFB; Alamogordo, NM		

	File ID	DF	Analyzed	By	Prep Date	Prep Batch	Analytical Batch
Run #1	G0068421.D	1	11/15/10	MM	n/a	n/a	VG2578
Run #2							

	Initial Weight
Run #1	5.96 g
Run #2	

VOA Special List

CAS No.	Compound	Result	RL	MDL	Units	Q
67-64-1	Acetone	ND	51	20	ug/kg	
75-05-8	Acetonitrile	ND	51	18	ug/kg	
107-02-8	Acrolein	ND	25	11	ug/kg	
107-13-1	Acrylonitrile	ND	25	12	ug/kg	
107-05-1	Allyl chloride	ND	25	5.1	ug/kg	
71-43-2	Benzene	ND	5.1	1.5	ug/kg	
100-44-7	Benzyl Chloride	ND	5.1	1.5	ug/kg	
108-86-1	Bromobenzene	ND	5.1	1.4	ug/kg	
74-97-5	Bromochloromethane	ND	5.1	1.4	ug/kg	
75-27-4	Bromodichloromethane	ND	5.1	1.1	ug/kg	
75-25-2	Bromoform	ND	5.1	1.5	ug/kg	
104-51-8	n-Butylbenzene	ND	5.1	1.3	ug/kg	
135-98-8	sec-Butylbenzene	ND	5.1	1.6	ug/kg	
98-06-6	tert-Butylbenzene	ND	5.1	1.2	ug/kg	
108-90-7	Chlorobenzene	ND	5.1	1.0	ug/kg	
75-00-3	Chloroethane	ND	5.1	2.0	ug/kg	
67-66-3	Chloroform	ND	5.1	1.2	ug/kg	
544-10-5	1-Chlorohexane	ND	5.1	1.4	ug/kg	
95-49-8	o-Chlorotoluene	ND	5.1	1.2	ug/kg	
106-43-4	p-Chlorotoluene	ND	5.1	1.2	ug/kg	
110-75-8	2-Chloroethyl vinyl ether	ND	25	10	ug/kg	
75-15-0	Carbon disulfide	ND	5.1	2.0	ug/kg	
56-23-5	Carbon tetrachloride	ND	5.1	1.8	ug/kg	
75-34-3	1,1-Dichloroethane	ND	5.1	1.1	ug/kg	
75-35-4	1,1-Dichloroethylene	ND	5.1	1.4	ug/kg	
563-58-6	1,1-Dichloropropene	ND	5.1	1.3	ug/kg	
96-12-8	1,2-Dibromo-3-chloropropane	ND	5.1	2.3	ug/kg	
106-93-4	1,2-Dibromoethane	ND	5.1	1.0	ug/kg	
107-06-2	1,2-Dichloroethane	ND	5.1	1.0	ug/kg	
78-87-5	1,2-Dichloropropane	ND	5.1	1.2	ug/kg	
142-28-9	1,3-Dichloropropane	ND	5.1	1.0	ug/kg	
594-20-7	2,2-Dichloropropane	ND	5.1	1.4	ug/kg	

ND = Not detected MDL - Method Detection Limit
RL = Reporting Limit
E = Indicates value exceeds calibration range

J = Indicates an estimated value
B = Indicates analyte found in associated method blank
N = Indicates presumptive evidence of a compound

Report of Analysis

Client Sample ID:	SS39-DPT-15A		
Lab Sample ID:	F77899-13	**Date Sampled:**	11/08/10
Matrix:	SO - Soil	**Date Received:**	11/09/10
Method:	SW846 8260B	**Percent Solids:**	82.8
Project:	Holloman AFB; Alamogordo, NM		

VOA Special List

CAS No.	Compound	Result	RL	MDL	Units	Q
124-48-1	Dibromochloromethane	ND	5.1	1.0	ug/kg	
75-71-8	Dichlorodifluoromethane	ND	5.1	1.5	ug/kg	
156-59-2	cis-1,2-Dichloroethylene	ND	5.1	1.5	ug/kg	
10061-01-5	cis-1,3-Dichloropropene	ND	5.1	1.0	ug/kg	
1476-11-5	cis-1,4-Dichloro-2-Butene	ND	25	5.1	ug/kg	
541-73-1	m-Dichlorobenzene	ND	5.1	1.2	ug/kg	
95-50-1	o-Dichlorobenzene	ND	5.1	1.1	ug/kg	
106-46-7	p-Dichlorobenzene	ND	5.1	1.1	ug/kg	
156-60-5	trans-1,2-Dichloroethylene	ND	5.1	1.5	ug/kg	
10061-02-6	trans-1,3-Dichloropropene	ND	5.1	1.1	ug/kg	
100-41-4	Ethylbenzene	ND	5.1	1.0	ug/kg	
97-63-2	Ethyl methacrylate	ND	25	5.1	ug/kg	
76-13-1	Freon 113	ND	5.1	1.7	ug/kg	
591-78-6	2-Hexanone	ND	25	5.5	ug/kg	
87-68-3	Hexachlorobutadiene	ND	5.1	2.0	ug/kg	
110-54-3	Hexane	ND	5.1	1.9	ug/kg	
98-82-8	Isopropylbenzene	ND	5.1	1.1	ug/kg	
99-87-6	p-Isopropyltoluene	ND	5.1	1.2	ug/kg	
108-10-1	4-Methyl-2-pentanone	ND	25	5.6	ug/kg	
126-98-7	Methacrylonitrile	ND	25	9.3	ug/kg	
74-83-9	Methyl bromide	ND	5.1	2.0	ug/kg	
74-87-3	Methyl chloride	ND	5.1	2.0	ug/kg	
74-88-4	Methyl iodide	ND	10	1.1	ug/kg	
80-62-6	Methyl methacrylate	ND	5.1	1.8	ug/kg	
74-95-3	Methylene bromide	ND	5.1	1.5	ug/kg	
75-09-2	Methylene chloride [a]	8.4	10	4.7	ug/kg	J
78-93-3	Methyl ethyl ketone	ND	25	6.2	ug/kg	
1634-04-4	Methyl Tert Butyl Ether	ND	5.1	2.0	ug/kg	
91-20-3	Naphthalene	ND	5.1	2.0	ug/kg	
76-01-7	Pentachloroethane	ND	25	5.1	ug/kg	
107-12-0	Propionitrile	ND	51	16	ug/kg	
103-65-1	n-Propylbenzene	ND	5.1	1.4	ug/kg	
100-42-5	Styrene	ND	5.1	2.6	ug/kg	
630-20-6	1,1,1,2-Tetrachloroethane	ND	5.1	1.0	ug/kg	
71-55-6	1,1,1-Trichloroethane	ND	5.1	1.1	ug/kg	
79-34-5	1,1,2,2-Tetrachloroethane	ND	5.1	1.2	ug/kg	
79-00-5	1,1,2-Trichloroethane	ND	5.1	1.1	ug/kg	
87-61-6	1,2,3-Trichlorobenzene	ND	5.1	1.0	ug/kg	
96-18-4	1,2,3-Trichloropropane	ND	5.1	1.7	ug/kg	
120-82-1	1,2,4-Trichlorobenzene	ND	5.1	1.2	ug/kg	

ND = Not detected MDL - Method Detection Limit
RL = Reporting Limit
E = Indicates value exceeds calibration range

J = Indicates an estimated value
B = Indicates analyte found in associated method blank
N = Indicates presumptive evidence of a compound

Report of Analysis

Client Sample ID:	SS39-DPT-15A		
Lab Sample ID:	F77899-13	**Date Sampled:**	11/08/10
Matrix:	SO - Soil	**Date Received:**	11/09/10
Method:	SW846 8260B	**Percent Solids:**	82.8
Project:	Holloman AFB; Alamogordo, NM		

VOA Special List

CAS No.	Compound	Result	RL	MDL	Units	Q
95-63-6	1,2,4-Trimethylbenzene	ND	5.1	1.1	ug/kg	
108-67-8	1,3,5-Trimethylbenzene	ND	5.1	1.3	ug/kg	
127-18-4	Tetrachloroethylene	ND	5.1	1.0	ug/kg	
108-88-3	Toluene	ND	5.1	1.2	ug/kg	
79-01-6	Trichloroethylene	ND	5.1	1.2	ug/kg	
75-69-4	Trichlorofluoromethane	ND	5.1	2.0	ug/kg	
110-57-6	Trans-1,4-Dichloro-2-Butene	ND	25	5.1	ug/kg	
75-01-4	Vinyl chloride	ND	5.1	1.5	ug/kg	
108-05-4	Vinyl Acetate	ND	25	14	ug/kg	
	m,p-Xylene	ND	10	2.2	ug/kg	
95-47-6	o-Xylene	ND	5.1	1.0	ug/kg	

CAS No.	Surrogate Recoveries	Run# 1	Run# 2	Limits
1868-53-7	Dibromofluoromethane	113%		80-121%
2037-26-5	Toluene-D8	95%		71-130%
460-00-4	4-Bromofluorobenzene	92%		59-148%
17060-07-0	1,2-Dichloroethane-D4	112%		77-123%

(a) Suspected laboratory contaminant.

ND = Not detected MDL - Method Detection Limit
RL = Reporting Limit
E = Indicates value exceeds calibration range

J = Indicates an estimated value
B = Indicates analyte found in associated method blank
N = Indicates presumptive evidence of a compound

Report of Analysis

Client Sample ID:	SS39-DPT-15A		
Lab Sample ID:	F77899-13	**Date Sampled:**	11/08/10
Matrix:	SO - Soil	**Date Received:**	11/09/10
Method:	SW846 8015C	**Percent Solids:**	82.8
Project:	Holloman AFB; Alamogordo, NM		

	File ID	DF	Analyzed	By	Prep Date	Prep Batch	Analytical Batch
Run #1	QR056657.D	1	11/12/10	AH	n/a	n/a	GQR2466
Run #2							

	Initial Weight	Final Volume	Methanol Aliquot
Run #1	5.39 g	5.0 ml	100 ul
Run #2			

CAS No.	Compound	Result	RL	MDL	Units	Q
	TPH-GRO (C6-C10)	ND	6.6	3.3	mg/kg	

CAS No.	Surrogate Recoveries	Run# 1	Run# 2	Limits
460-00-4	4-Bromofluorobenzene	88%		56-136%
98-08-8	aaa-Trifluorotoluene	77%		61-121%

ND = Not detected MDL - Method Detection Limit
RL = Reporting Limit
E = Indicates value exceeds calibration range

J = Indicates an estimated value
B = Indicates analyte found in associated method blank
N = Indicates presumptive evidence of a compound

Accutest Laboratories

Report of Analysis

Client Sample ID:	SS39-DPT-15A		
Lab Sample ID:	F77899-13	**Date Sampled:**	11/08/10
Matrix:	SO - Soil	**Date Received:**	11/09/10
Method:	SW846 8015C SW846 3550C	**Percent Solids:**	82.8
Project:	Holloman AFB; Alamogordo, NM		

	File ID	DF	Analyzed	By	Prep Date	Prep Batch	Analytical Batch
Run #1	YY18809.D	1	11/20/10	MV	11/11/10	OP35013	GYY677
Run #2							

	Initial Weight	Final Volume
Run #1	30.3 g	1.0 ml
Run #2		

CAS No.	Compound	Result	RL	MDL	Units	Q
	TPH (C10-C28)	ND	10	4.0	mg/kg	

CAS No.	Surrogate Recoveries	Run# 1	Run# 2	Limits
84-15-1	o-Terphenyl	81%		49-108%

ND = Not detected MDL - Method Detection Limit
RL = Reporting Limit
E = Indicates value exceeds calibration range

J = Indicates an estimated value
B = Indicates analyte found in associated method blank
N = Indicates presumptive evidence of a compound

Report of Analysis

Client Sample ID:	SS39-DPT-15A		
Lab Sample ID:	F77899-13	**Date Sampled:**	11/08/10
Matrix:	SO - Soil	**Date Received:**	11/09/10
		Percent Solids:	82.8
Project:	Holloman AFB; Alamogordo, NM		

Metals Analysis

Analyte	Result	RL	MDL	Units	DF	Prep	Analyzed	By	Method	Prep Method
Arsenic	0.79	0.41	0.083	mg/kg	1	11/10/10	11/10/10	RS	SW846 6010C [1]	SW846 3050B [4]
Barium	41.4	8.3	0.41	mg/kg	1	11/10/10	11/10/10	RS	SW846 6010C [1]	SW846 3050B [4]
Cadmium	0.45	0.17	0.041	mg/kg	1	11/10/10	11/10/10	RS	SW846 6010C [1]	SW846 3050B [4]
Chromium [a]	3.2 B	4.1	0.41	mg/kg	10	11/10/10	11/11/10	RS	SW846 6010C [2]	SW846 3050B [4]
Lead [a]	1.2 B	3.3	0.17	mg/kg	4	11/10/10	11/11/10	RS	SW846 6010C [2]	SW846 3050B [4]
Mercury	0.0096 U	0.096	0.0096	mg/kg	1	11/18/10	11/18/10	LM	SW846 7471B [3]	SW846 7471B [5]
Selenium [a]	1.7 U	8.3	1.7	mg/kg	10	11/10/10	11/11/10	RS	SW846 6010C [2]	SW846 3050B [4]
Silver	0.28 B	0.41	0.041	mg/kg	1	11/10/10	11/10/10	RS	SW846 6010C [1]	SW846 3050B [4]

(1) Instrument QC Batch: MA8502
(2) Instrument QC Batch: MA8504
(3) Instrument QC Batch: MA8518
(4) Prep QC Batch: MP19447
(5) Prep QC Batch: MP19500

(a) Elevated reporting limit(s) due to matrix interference.

RL = Reporting Limit
MDL = Method Detection Limit

U = Indicates a result < MDL
B = Indicates a result > = MDL but < RL

Report of Analysis

Client Sample ID:	SS39-DPT-15B		
Lab Sample ID:	F77899-14	**Date Sampled:**	11/08/10
Matrix:	SO - Soil	**Date Received:**	11/09/10
Method:	SW846 8260B	**Percent Solids:**	82.7
Project:	Holloman AFB; Alamogordo, NM		

	File ID	DF	Analyzed	By	Prep Date	Prep Batch	Analytical Batch
Run #1	G0068422.D	1	11/15/10	MM	n/a	n/a	VG2578
Run #2							

	Initial Weight
Run #1	6.20 g
Run #2	

VOA Special List

CAS No.	Compound	Result	RL	MDL	Units	Q
67-64-1	Acetone	ND	49	20	ug/kg	
75-05-8	Acetonitrile	ND	49	18	ug/kg	
107-02-8	Acrolein	ND	24	11	ug/kg	
107-13-1	Acrylonitrile	ND	24	11	ug/kg	
107-05-1	Allyl chloride	ND	24	4.9	ug/kg	
71-43-2	Benzene	ND	4.9	1.5	ug/kg	
100-44-7	Benzyl Chloride	ND	4.9	1.5	ug/kg	
108-86-1	Bromobenzene	ND	4.9	1.4	ug/kg	
74-97-5	Bromochloromethane	ND	4.9	1.4	ug/kg	
75-27-4	Bromodichloromethane	ND	4.9	1.1	ug/kg	
75-25-2	Bromoform	ND	4.9	1.5	ug/kg	
104-51-8	n-Butylbenzene	ND	4.9	1.3	ug/kg	
135-98-8	sec-Butylbenzene	ND	4.9	1.6	ug/kg	
98-06-6	tert-Butylbenzene	ND	4.9	1.2	ug/kg	
108-90-7	Chlorobenzene	ND	4.9	0.98	ug/kg	
75-00-3	Chloroethane	ND	4.9	2.0	ug/kg	
67-66-3	Chloroform	ND	4.9	1.2	ug/kg	
544-10-5	1-Chlorohexane	ND	4.9	1.4	ug/kg	
95-49-8	o-Chlorotoluene	ND	4.9	1.2	ug/kg	
106-43-4	p-Chlorotoluene	ND	4.9	1.2	ug/kg	
110-75-8	2-Chloroethyl vinyl ether	ND	24	9.8	ug/kg	
75-15-0	Carbon disulfide	ND	4.9	2.0	ug/kg	
56-23-5	Carbon tetrachloride	ND	4.9	1.8	ug/kg	
75-34-3	1,1-Dichloroethane	ND	4.9	1.1	ug/kg	
75-35-4	1,1-Dichloroethylene	ND	4.9	1.4	ug/kg	
563-58-6	1,1-Dichloropropene	ND	4.9	1.3	ug/kg	
96-12-8	1,2-Dibromo-3-chloropropane	ND	4.9	2.2	ug/kg	
106-93-4	1,2-Dibromoethane	ND	4.9	0.98	ug/kg	
107-06-2	1,2-Dichloroethane	ND	4.9	0.98	ug/kg	
78-87-5	1,2-Dichloropropane	ND	4.9	1.2	ug/kg	
142-28-9	1,3-Dichloropropane	ND	4.9	0.98	ug/kg	
594-20-7	2,2-Dichloropropane	ND	4.9	1.4	ug/kg	

ND = Not detected MDL - Method Detection Limit
RL = Reporting Limit
E = Indicates value exceeds calibration range

J = Indicates an estimated value
B = Indicates analyte found in associated method blank
N = Indicates presumptive evidence of a compound

Report of Analysis

Client Sample ID:	SS39-DPT-15B		
Lab Sample ID:	F77899-14	**Date Sampled:**	11/08/10
Matrix:	SO - Soil	**Date Received:**	11/09/10
Method:	SW846 8260B	**Percent Solids:**	82.7
Project:	Holloman AFB; Alamogordo, NM		

VOA Special List

CAS No.	Compound	Result	RL	MDL	Units	Q
124-48-1	Dibromochloromethane	ND	4.9	0.98	ug/kg	
75-71-8	Dichlorodifluoromethane	ND	4.9	1.5	ug/kg	
156-59-2	cis-1,2-Dichloroethylene	ND	4.9	1.5	ug/kg	
10061-01-5	cis-1,3-Dichloropropene	ND	4.9	0.98	ug/kg	
1476-11-5	cis-1,4-Dichloro-2-Butene	ND	24	4.9	ug/kg	
541-73-1	m-Dichlorobenzene	ND	4.9	1.2	ug/kg	
95-50-1	o-Dichlorobenzene	ND	4.9	1.1	ug/kg	
106-46-7	p-Dichlorobenzene	ND	4.9	1.1	ug/kg	
156-60-5	trans-1,2-Dichloroethylene	ND	4.9	1.5	ug/kg	
10061-02-6	trans-1,3-Dichloropropene	ND	4.9	1.1	ug/kg	
100-41-4	Ethylbenzene	ND	4.9	0.98	ug/kg	
97-63-2	Ethyl methacrylate	ND	24	4.9	ug/kg	
76-13-1	Freon 113	ND	4.9	1.7	ug/kg	
591-78-6	2-Hexanone	ND	24	5.3	ug/kg	
87-68-3	Hexachlorobutadiene	ND	4.9	2.0	ug/kg	
110-54-3	Hexane	ND	4.9	1.9	ug/kg	
98-82-8	Isopropylbenzene	ND	4.9	1.1	ug/kg	
99-87-6	p-Isopropyltoluene	ND	4.9	1.2	ug/kg	
108-10-1	4-Methyl-2-pentanone	ND	24	5.4	ug/kg	
126-98-7	Methacrylonitrile	ND	24	9.0	ug/kg	
74-83-9	Methyl bromide	ND	4.9	2.0	ug/kg	
74-87-3	Methyl chloride	ND	4.9	2.0	ug/kg	
74-88-4	Methyl iodide	ND	9.8	1.1	ug/kg	
80-62-6	Methyl methacrylate	ND	4.9	1.8	ug/kg	
74-95-3	Methylene bromide	ND	4.9	1.5	ug/kg	
75-09-2	Methylene chloride	ND	9.8	4.5	ug/kg	
78-93-3	Methyl ethyl ketone	ND	24	5.9	ug/kg	
1634-04-4	Methyl Tert Butyl Ether	ND	4.9	2.0	ug/kg	
91-20-3	Naphthalene	ND	4.9	2.0	ug/kg	
76-01-7	Pentachloroethane	ND	24	4.9	ug/kg	
107-12-0	Propionitrile	ND	49	16	ug/kg	
103-65-1	n-Propylbenzene	ND	4.9	1.4	ug/kg	
100-42-5	Styrene	ND	4.9	2.5	ug/kg	
630-20-6	1,1,1,2-Tetrachloroethane	ND	4.9	0.98	ug/kg	
71-55-6	1,1,1-Trichloroethane	ND	4.9	1.1	ug/kg	
79-34-5	1,1,2,2-Tetrachloroethane	ND	4.9	1.2	ug/kg	
79-00-5	1,1,2-Trichloroethane	ND	4.9	1.1	ug/kg	
87-61-6	1,2,3-Trichlorobenzene	ND	4.9	0.98	ug/kg	
96-18-4	1,2,3-Trichloropropane	ND	4.9	1.7	ug/kg	
120-82-1	1,2,4-Trichlorobenzene	ND	4.9	1.2	ug/kg	

ND = Not detected MDL - Method Detection Limit
RL = Reporting Limit
E = Indicates value exceeds calibration range

J = Indicates an estimated value
B = Indicates analyte found in associated method blank
N = Indicates presumptive evidence of a compound

Report of Analysis

Client Sample ID:	SS39-DPT-15B		
Lab Sample ID:	F77899-14	**Date Sampled:**	11/08/10
Matrix:	SO - Soil	**Date Received:**	11/09/10
Method:	SW846 8260B	**Percent Solids:**	82.7
Project:	Holloman AFB; Alamogordo, NM		

VOA Special List

CAS No.	Compound	Result	RL	MDL	Units	Q
95-63-6	1,2,4-Trimethylbenzene	ND	4.9	1.1	ug/kg	
108-67-8	1,3,5-Trimethylbenzene	ND	4.9	1.3	ug/kg	
127-18-4	Tetrachloroethylene	ND	4.9	0.98	ug/kg	
108-88-3	Toluene	ND	4.9	1.2	ug/kg	
79-01-6	Trichloroethylene	ND	4.9	1.2	ug/kg	
75-69-4	Trichlorofluoromethane	ND	4.9	2.0	ug/kg	
110-57-6	Trans-1,4-Dichloro-2-Butene	ND	24	4.9	ug/kg	
75-01-4	Vinyl chloride	ND	4.9	1.5	ug/kg	
108-05-4	Vinyl Acetate	ND	24	14	ug/kg	
	m,p-Xylene	ND	9.8	2.1	ug/kg	
95-47-6	o-Xylene	ND	4.9	0.98	ug/kg	

CAS No.	Surrogate Recoveries	Run# 1	Run# 2	Limits
1868-53-7	Dibromofluoromethane	113%		80-121%
2037-26-5	Toluene-D8	90%		71-130%
460-00-4	4-Bromofluorobenzene	89%		59-148%
17060-07-0	1,2-Dichloroethane-D4	118%		77-123%

ND = Not detected MDL - Method Detection Limit
RL = Reporting Limit
E = Indicates value exceeds calibration range

J = Indicates an estimated value
B = Indicates analyte found in associated method blank
N = Indicates presumptive evidence of a compound

Report of Analysis

Client Sample ID:	SS39-DPT-15B		
Lab Sample ID:	F77899-14	**Date Sampled:**	11/08/10
Matrix:	SO - Soil	**Date Received:**	11/09/10
Method:	SW846 8015C	**Percent Solids:**	82.7
Project:	Holloman AFB; Alamogordo, NM		

	File ID	DF	Analyzed	By	Prep Date	Prep Batch	Analytical Batch
Run #1	QR056660.D	1	11/12/10	AH	n/a	n/a	GQR2466
Run #2							

	Initial Weight	Final Volume	Methanol Aliquot
Run #1	5.61 g	5.0 ml	100 ul
Run #2			

CAS No.	Compound	Result	RL	MDL	Units	Q
	TPH-GRO (C6-C10)	ND	6.4	3.2	mg/kg	

CAS No.	Surrogate Recoveries	Run# 1	Run# 2	Limits
460-00-4	4-Bromofluorobenzene	87%		56-136%
98-08-8	aaa-Trifluorotoluene	78%		61-121%

ND = Not detected MDL - Method Detection Limit
RL = Reporting Limit
E = Indicates value exceeds calibration range

J = Indicates an estimated value
B = Indicates analyte found in associated method blank
N = Indicates presumptive evidence of a compound

Report of Analysis

Client Sample ID:	SS39-DPT-15B		
Lab Sample ID:	F77899-14	**Date Sampled:**	11/08/10
Matrix:	SO - Soil	**Date Received:**	11/09/10
Method:	SW846 8015C SW846 3550C	**Percent Solids:**	82.7
Project:	Holloman AFB; Alamogordo, NM		

	File ID	DF	Analyzed	By	Prep Date	Prep Batch	Analytical Batch
Run #1	YY18810.D	1	11/20/10	MV	11/11/10	OP35013	GYY677
Run #2							

	Initial Weight	Final Volume
Run #1	30.5 g	1.0 ml
Run #2		

CAS No.	Compound	Result	RL	MDL	Units	Q
	TPH (C10-C28)	ND	9.9	4.0	mg/kg	

CAS No.	Surrogate Recoveries	Run# 1	Run# 2	Limits
84-15-1	o-Terphenyl	88%		49-108%

ND = Not detected MDL - Method Detection Limit
RL = Reporting Limit
E = Indicates value exceeds calibration range

J = Indicates an estimated value
B = Indicates analyte found in associated method blank
N = Indicates presumptive evidence of a compound

Report of Analysis

Client Sample ID:	SS39-DPT-15B		
Lab Sample ID:	F77899-14	**Date Sampled:**	11/08/10
Matrix:	SO - Soil	**Date Received:**	11/09/10
		Percent Solids:	82.7
Project:	Holloman AFB; Alamogordo, NM		

Metals Analysis

Analyte	Result	RL	MDL	Units	DF	Prep	Analyzed	By	Method	Prep Method
Arsenic	0.75	0.51	0.10	mg/kg	1	11/10/10	11/10/10	RS	SW846 6010C [1]	SW846 3050B [4]
Barium	24.0	10	0.51	mg/kg	1	11/10/10	11/10/10	RS	SW846 6010C [1]	SW846 3050B [4]
Cadmium	0.31	0.20	0.051	mg/kg	1	11/10/10	11/10/10	RS	SW846 6010C [1]	SW846 3050B [4]
Chromium [a]	2.0 B	5.1	0.51	mg/kg	10	11/10/10	11/11/10	RS	SW846 6010C [2]	SW846 3050B [4]
Lead [a]	1.1 B	4.1	0.20	mg/kg	4	11/10/10	11/11/10	RS	SW846 6010C [2]	SW846 3050B [4]
Mercury	0.010 U	0.10	0.010	mg/kg	1	11/18/10	11/18/10	LM	SW846 7471B [3]	SW846 7471B [5]
Selenium [a]	2.0 U	10	2.0	mg/kg	10	11/10/10	11/11/10	RS	SW846 6010C [2]	SW846 3050B [4]
Silver	0.051 U	0.51	0.051	mg/kg	1	11/10/10	11/10/10	RS	SW846 6010C [1]	SW846 3050B [4]

(1) Instrument QC Batch: MA8502
(2) Instrument QC Batch: MA8504
(3) Instrument QC Batch: MA8518
(4) Prep QC Batch: MP19447
(5) Prep QC Batch: MP19500

(a) Elevated reporting limit(s) due to matrix interference.

RL = Reporting Limit
MDL = Method Detection Limit

U = Indicates a result < MDL
B = Indicates a result > = MDL but < RL

Report of Analysis

Client Sample ID:	SS39-DPT-15C		
Lab Sample ID:	F77899-15	**Date Sampled:**	11/08/10
Matrix:	SO - Soil	**Date Received:**	11/09/10
Method:	SW846 8260B	**Percent Solids:**	83.7
Project:	Holloman AFB; Alamogordo, NM		

	File ID	DF	Analyzed	By	Prep Date	Prep Batch	Analytical Batch
Run #1	G0068423.D	1	11/15/10	MM	n/a	n/a	VG2578
Run #2							

	Initial Weight
Run #1	6.51 g
Run #2	

VOA Special List

CAS No.	Compound	Result	RL	MDL	Units	Q
67-64-1	Acetone	ND	46	18	ug/kg	
75-05-8	Acetonitrile	ND	46	17	ug/kg	
107-02-8	Acrolein	ND	23	10	ug/kg	
107-13-1	Acrylonitrile	ND	23	10	ug/kg	
107-05-1	Allyl chloride	ND	23	4.6	ug/kg	
71-43-2	Benzene	ND	4.6	1.4	ug/kg	
100-44-7	Benzyl Chloride	ND	4.6	1.4	ug/kg	
108-86-1	Bromobenzene	ND	4.6	1.3	ug/kg	
74-97-5	Bromochloromethane	ND	4.6	1.3	ug/kg	
75-27-4	Bromodichloromethane	ND	4.6	1.0	ug/kg	
75-25-2	Bromoform	ND	4.6	1.4	ug/kg	
104-51-8	n-Butylbenzene	ND	4.6	1.2	ug/kg	
135-98-8	sec-Butylbenzene	ND	4.6	1.5	ug/kg	
98-06-6	tert-Butylbenzene	ND	4.6	1.1	ug/kg	
108-90-7	Chlorobenzene	ND	4.6	0.92	ug/kg	
75-00-3	Chloroethane	ND	4.6	1.8	ug/kg	
67-66-3	Chloroform	ND	4.6	1.1	ug/kg	
544-10-5	1-Chlorohexane	ND	4.6	1.3	ug/kg	
95-49-8	o-Chlorotoluene	ND	4.6	1.1	ug/kg	
106-43-4	p-Chlorotoluene	ND	4.6	1.1	ug/kg	
110-75-8	2-Chloroethyl vinyl ether	ND	23	9.2	ug/kg	
75-15-0	Carbon disulfide	ND	4.6	1.8	ug/kg	
56-23-5	Carbon tetrachloride	ND	4.6	1.7	ug/kg	
75-34-3	1,1-Dichloroethane	ND	4.6	1.0	ug/kg	
75-35-4	1,1-Dichloroethylene	ND	4.6	1.3	ug/kg	
563-58-6	1,1-Dichloropropene	ND	4.6	1.2	ug/kg	
96-12-8	1,2-Dibromo-3-chloropropane	ND	4.6	2.1	ug/kg	
106-93-4	1,2-Dibromoethane	ND	4.6	0.92	ug/kg	
107-06-2	1,2-Dichloroethane	ND	4.6	0.92	ug/kg	
78-87-5	1,2-Dichloropropane	ND	4.6	1.1	ug/kg	
142-28-9	1,3-Dichloropropane	ND	4.6	0.92	ug/kg	
594-20-7	2,2-Dichloropropane	ND	4.6	1.3	ug/kg	

ND = Not detected MDL - Method Detection Limit
RL = Reporting Limit
E = Indicates value exceeds calibration range

J = Indicates an estimated value
B = Indicates analyte found in associated method blank
N = Indicates presumptive evidence of a compound

Report of Analysis

Client Sample ID:	SS39-DPT-15C		
Lab Sample ID:	F77899-15	**Date Sampled:**	11/08/10
Matrix:	SO - Soil	**Date Received:**	11/09/10
Method:	SW846 8260B	**Percent Solids:**	83.7
Project:	Holloman AFB; Alamogordo, NM		

VOA Special List

CAS No.	Compound	Result	RL	MDL	Units	Q
124-48-1	Dibromochloromethane	ND	4.6	0.92	ug/kg	
75-71-8	Dichlorodifluoromethane	ND	4.6	1.4	ug/kg	
156-59-2	cis-1,2-Dichloroethylene	ND	4.6	1.4	ug/kg	
10061-01-5	cis-1,3-Dichloropropene	ND	4.6	0.92	ug/kg	
1476-11-5	cis-1,4-Dichloro-2-Butene	ND	23	4.6	ug/kg	
541-73-1	m-Dichlorobenzene	ND	4.6	1.1	ug/kg	
95-50-1	o-Dichlorobenzene	ND	4.6	1.0	ug/kg	
106-46-7	p-Dichlorobenzene	ND	4.6	1.0	ug/kg	
156-60-5	trans-1,2-Dichloroethylene	ND	4.6	1.4	ug/kg	
10061-02-6	trans-1,3-Dichloropropene	ND	4.6	1.0	ug/kg	
100-41-4	Ethylbenzene	ND	4.6	0.92	ug/kg	
97-63-2	Ethyl methacrylate	ND	23	4.6	ug/kg	
76-13-1	Freon 113	ND	4.6	1.6	ug/kg	
591-78-6	2-Hexanone	ND	23	5.0	ug/kg	
87-68-3	Hexachlorobutadiene	ND	4.6	1.8	ug/kg	
110-54-3	Hexane	ND	4.6	1.7	ug/kg	
98-82-8	Isopropylbenzene	ND	4.6	1.0	ug/kg	
99-87-6	p-Isopropyltoluene	ND	4.6	1.1	ug/kg	
108-10-1	4-Methyl-2-pentanone	ND	23	5.0	ug/kg	
126-98-7	Methacrylonitrile	ND	23	8.4	ug/kg	
74-83-9	Methyl bromide	ND	4.6	1.8	ug/kg	
74-87-3	Methyl chloride	ND	4.6	1.8	ug/kg	
74-88-4	Methyl iodide	ND	9.2	1.0	ug/kg	
80-62-6	Methyl methacrylate	ND	4.6	1.7	ug/kg	
74-95-3	Methylene bromide	ND	4.6	1.4	ug/kg	
75-09-2	Methylene chloride [a]	6.6	9.2	4.2	ug/kg	J
78-93-3	Methyl ethyl ketone	ND	23	5.6	ug/kg	
1634-04-4	Methyl Tert Butyl Ether	ND	4.6	1.8	ug/kg	
91-20-3	Naphthalene	ND	4.6	1.8	ug/kg	
76-01-7	Pentachloroethane	ND	23	4.6	ug/kg	
107-12-0	Propionitrile	ND	46	15	ug/kg	
103-65-1	n-Propylbenzene	ND	4.6	1.3	ug/kg	
100-42-5	Styrene	ND	4.6	2.4	ug/kg	
630-20-6	1,1,1,2-Tetrachloroethane	ND	4.6	0.92	ug/kg	
71-55-6	1,1,1-Trichloroethane	ND	4.6	1.0	ug/kg	
79-34-5	1,1,2,2-Tetrachloroethane	ND	4.6	1.1	ug/kg	
79-00-5	1,1,2-Trichloroethane	ND	4.6	1.0	ug/kg	
87-61-6	1,2,3-Trichlorobenzene	ND	4.6	0.92	ug/kg	
96-18-4	1,2,3-Trichloropropane	ND	4.6	1.6	ug/kg	
120-82-1	1,2,4-Trichlorobenzene	ND	4.6	1.1	ug/kg	

ND = Not detected MDL - Method Detection Limit
RL = Reporting Limit
E = Indicates value exceeds calibration range

J = Indicates an estimated value
B = Indicates analyte found in associated method blank
N = Indicates presumptive evidence of a compound

Report of Analysis

Client Sample ID:	SS39-DPT-15C		
Lab Sample ID:	F77899-15	**Date Sampled:**	11/08/10
Matrix:	SO - Soil	**Date Received:**	11/09/10
Method:	SW846 8260B	**Percent Solids:**	83.7
Project:	Holloman AFB; Alamogordo, NM		

VOA Special List

CAS No.	Compound	Result	RL	MDL	Units	Q
95-63-6	1,2,4-Trimethylbenzene	ND	4.6	1.0	ug/kg	
108-67-8	1,3,5-Trimethylbenzene	ND	4.6	1.2	ug/kg	
127-18-4	Tetrachloroethylene	ND	4.6	0.92	ug/kg	
108-88-3	Toluene	ND	4.6	1.1	ug/kg	
79-01-6	Trichloroethylene	ND	4.6	1.1	ug/kg	
75-69-4	Trichlorofluoromethane	ND	4.6	1.8	ug/kg	
110-57-6	Trans-1,4-Dichloro-2-Butene	ND	23	4.6	ug/kg	
75-01-4	Vinyl chloride	ND	4.6	1.4	ug/kg	
108-05-4	Vinyl Acetate	ND	23	13	ug/kg	
	m,p-Xylene	ND	9.2	2.0	ug/kg	
95-47-6	o-Xylene	ND	4.6	0.92	ug/kg	

CAS No.	Surrogate Recoveries	Run# 1	Run# 2	Limits
1868-53-7	Dibromofluoromethane	112%		80-121%
2037-26-5	Toluene-D8	94%		71-130%
460-00-4	4-Bromofluorobenzene	93%		59-148%
17060-07-0	1,2-Dichloroethane-D4	116%		77-123%

(a) Suspected laboratory contaminant.

ND = Not detected MDL - Method Detection Limit
RL = Reporting Limit
E = Indicates value exceeds calibration range

J = Indicates an estimated value
B = Indicates analyte found in associated method blank
N = Indicates presumptive evidence of a compound

Report of Analysis

Client Sample ID:	SS39-DPT-15C		
Lab Sample ID:	F77899-15	**Date Sampled:**	11/08/10
Matrix:	SO - Soil	**Date Received:**	11/09/10
Method:	SW846 8015C	**Percent Solids:**	83.7
Project:	Holloman AFB; Alamogordo, NM		

	File ID	DF	Analyzed	By	Prep Date	Prep Batch	Analytical Batch
Run #1	QR056661.D	1	11/12/10	AH	n/a	n/a	GQR2466
Run #2							

	Initial Weight	Final Volume	Methanol Aliquot
Run #1	6.75 g	5.0 ml	100 ul
Run #2			

CAS No.	Compound	Result	RL	MDL	Units	Q
	TPH-GRO (C6-C10)	ND	5.4	2.7	mg/kg	

CAS No.	Surrogate Recoveries	Run# 1	Run# 2	Limits
460-00-4	4-Bromofluorobenzene	89%		56-136%
98-08-8	aaa-Trifluorotoluene	77%		61-121%

ND = Not detected MDL - Method Detection Limit
RL = Reporting Limit
E = Indicates value exceeds calibration range

J = Indicates an estimated value
B = Indicates analyte found in associated method blank
N = Indicates presumptive evidence of a compound

Report of Analysis

Client Sample ID:	SS39-DPT-15C		
Lab Sample ID:	F77899-15	**Date Sampled:**	11/08/10
Matrix:	SO - Soil	**Date Received:**	11/09/10
Method:	SW846 8015C SW846 3550C	**Percent Solids:**	83.7
Project:	Holloman AFB; Alamogordo, NM		

	File ID	DF	Analyzed	By	Prep Date	Prep Batch	Analytical Batch
Run #1	YY18811.D	1	11/20/10	MV	11/11/10	OP35013	GYY677
Run #2							

	Initial Weight	Final Volume
Run #1	30.1 g	1.0 ml
Run #2		

CAS No.	Compound	Result	RL	MDL	Units	Q
	TPH (C10-C28)	ND	9.9	4.0	mg/kg	

CAS No.	Surrogate Recoveries	Run# 1	Run# 2	Limits
84-15-1	o-Terphenyl	89%		49-108%

ND = Not detected MDL - Method Detection Limit
RL = Reporting Limit
E = Indicates value exceeds calibration range

J = Indicates an estimated value
B = Indicates analyte found in associated method blank
N = Indicates presumptive evidence of a compound

Report of Analysis

Client Sample ID:	SS39-DPT-15C		
Lab Sample ID:	F77899-15	**Date Sampled:**	11/08/10
Matrix:	SO - Soil	**Date Received:**	11/09/10
		Percent Solids:	83.7
Project:	Holloman AFB; Alamogordo, NM		

Metals Analysis

Analyte	Result	RL	MDL	Units	DF	Prep	Analyzed	By	Method	Prep Method
Arsenic	0.77	0.50	0.10	mg/kg	1	11/10/10	11/10/10	RS	SW846 6010C [1]	SW846 3050B [4]
Barium	56.0	10	0.50	mg/kg	1	11/10/10	11/10/10	RS	SW846 6010C [1]	SW846 3050B [4]
Cadmium	0.50	0.20	0.050	mg/kg	1	11/10/10	11/10/10	RS	SW846 6010C [1]	SW846 3050B [4]
Chromium [a]	3.7 B	5.0	0.50	mg/kg	10	11/10/10	11/11/10	RS	SW846 6010C [2]	SW846 3050B [4]
Lead [a]	1.6 B	4.0	0.20	mg/kg	4	11/10/10	11/11/10	RS	SW846 6010C [2]	SW846 3050B [4]
Mercury	0.0098 U	0.098	0.0098	mg/kg	1	11/18/10	11/18/10	LM	SW846 7471B [3]	SW846 7471B [5]
Selenium [a]	2.0 U	10	2.0	mg/kg	10	11/10/10	11/11/10	RS	SW846 6010C [2]	SW846 3050B [4]
Silver	0.050 U	0.50	0.050	mg/kg	1	11/10/10	11/10/10	RS	SW846 6010C [1]	SW846 3050B [4]

(1) Instrument QC Batch: MA8502
(2) Instrument QC Batch: MA8504
(3) Instrument QC Batch: MA8518
(4) Prep QC Batch: MP19447
(5) Prep QC Batch: MP19500

(a) Elevated reporting limit(s) due to matrix interference.

RL = Reporting Limit
MDL = Method Detection Limit

U = Indicates a result < MDL
B = Indicates a result > = MDL but < RL

Report of Analysis

Client Sample ID:	SS39-DPT-16A		
Lab Sample ID:	F77899-16	**Date Sampled:**	11/08/10
Matrix:	SO - Soil	**Date Received:**	11/09/10
Method:	SW846 8260B	**Percent Solids:**	81.5
Project:	Holloman AFB; Alamogordo, NM		

	File ID	DF	Analyzed	By	Prep Date	Prep Batch	Analytical Batch
Run #1	G0068424.D	1	11/15/10	MM	n/a	n/a	VG2578
Run #2							

	Initial Weight
Run #1	5.84 g
Run #2	

VOA Special List

CAS No.	Compound	Result	RL	MDL	Units	Q
67-64-1	Acetone	ND	53	21	ug/kg	
75-05-8	Acetonitrile	ND	53	19	ug/kg	
107-02-8	Acrolein	ND	26	12	ug/kg	
107-13-1	Acrylonitrile	ND	26	12	ug/kg	
107-05-1	Allyl chloride	ND	26	5.3	ug/kg	
71-43-2	Benzene	ND	5.3	1.6	ug/kg	
100-44-7	Benzyl Chloride	ND	5.3	1.6	ug/kg	
108-86-1	Bromobenzene	ND	5.3	1.5	ug/kg	
74-97-5	Bromochloromethane	ND	5.3	1.5	ug/kg	
75-27-4	Bromodichloromethane	ND	5.3	1.2	ug/kg	
75-25-2	Bromoform	ND	5.3	1.6	ug/kg	
104-51-8	n-Butylbenzene	ND	5.3	1.4	ug/kg	
135-98-8	sec-Butylbenzene	ND	5.3	1.7	ug/kg	
98-06-6	tert-Butylbenzene	ND	5.3	1.3	ug/kg	
108-90-7	Chlorobenzene	ND	5.3	1.1	ug/kg	
75-00-3	Chloroethane	ND	5.3	2.1	ug/kg	
67-66-3	Chloroform	ND	5.3	1.3	ug/kg	
544-10-5	1-Chlorohexane	ND	5.3	1.5	ug/kg	
95-49-8	o-Chlorotoluene	ND	5.3	1.3	ug/kg	
106-43-4	p-Chlorotoluene	ND	5.3	1.3	ug/kg	
110-75-8	2-Chloroethyl vinyl ether	ND	26	11	ug/kg	
75-15-0	Carbon disulfide	ND	5.3	2.1	ug/kg	
56-23-5	Carbon tetrachloride	ND	5.3	1.9	ug/kg	
75-34-3	1,1-Dichloroethane	ND	5.3	1.2	ug/kg	
75-35-4	1,1-Dichloroethylene	ND	5.3	1.5	ug/kg	
563-58-6	1,1-Dichloropropene	ND	5.3	1.4	ug/kg	
96-12-8	1,2-Dibromo-3-chloropropane	ND	5.3	2.4	ug/kg	
106-93-4	1,2-Dibromoethane	ND	5.3	1.1	ug/kg	
107-06-2	1,2-Dichloroethane	ND	5.3	1.1	ug/kg	
78-87-5	1,2-Dichloropropane	ND	5.3	1.3	ug/kg	
142-28-9	1,3-Dichloropropane	ND	5.3	1.1	ug/kg	
594-20-7	2,2-Dichloropropane	ND	5.3	1.5	ug/kg	

ND = Not detected MDL - Method Detection Limit
RL = Reporting Limit
E = Indicates value exceeds calibration range

J = Indicates an estimated value
B = Indicates analyte found in associated method blank
N = Indicates presumptive evidence of a compound

Report of Analysis

Client Sample ID:	SS39-DPT-16A		
Lab Sample ID:	F77899-16	**Date Sampled:**	11/08/10
Matrix:	SO - Soil	**Date Received:**	11/09/10
Method:	SW846 8260B	**Percent Solids:**	81.5
Project:	Holloman AFB; Alamogordo, NM		

VOA Special List

CAS No.	Compound	Result	RL	MDL	Units	Q
124-48-1	Dibromochloromethane	ND	5.3	1.1	ug/kg	
75-71-8	Dichlorodifluoromethane	ND	5.3	1.6	ug/kg	
156-59-2	cis-1,2-Dichloroethylene	ND	5.3	1.6	ug/kg	
10061-01-5	cis-1,3-Dichloropropene	ND	5.3	1.1	ug/kg	
1476-11-5	cis-1,4-Dichloro-2-Butene	ND	26	5.3	ug/kg	
541-73-1	m-Dichlorobenzene	ND	5.3	1.3	ug/kg	
95-50-1	o-Dichlorobenzene	ND	5.3	1.2	ug/kg	
106-46-7	p-Dichlorobenzene	ND	5.3	1.2	ug/kg	
156-60-5	trans-1,2-Dichloroethylene	ND	5.3	1.6	ug/kg	
10061-02-6	trans-1,3-Dichloropropene	ND	5.3	1.2	ug/kg	
100-41-4	Ethylbenzene	ND	5.3	1.1	ug/kg	
97-63-2	Ethyl methacrylate	ND	26	5.3	ug/kg	
76-13-1	Freon 113	ND	5.3	1.8	ug/kg	
591-78-6	2-Hexanone	ND	26	5.7	ug/kg	
87-68-3	Hexachlorobutadiene	ND	5.3	2.1	ug/kg	
110-54-3	Hexane	ND	5.3	2.0	ug/kg	
98-82-8	Isopropylbenzene	ND	5.3	1.2	ug/kg	
99-87-6	p-Isopropyltoluene	ND	5.3	1.3	ug/kg	
108-10-1	4-Methyl-2-pentanone	ND	26	5.8	ug/kg	
126-98-7	Methacrylonitrile	ND	26	9.7	ug/kg	
74-83-9	Methyl bromide	ND	5.3	2.1	ug/kg	
74-87-3	Methyl chloride	ND	5.3	2.1	ug/kg	
74-88-4	Methyl iodide	ND	11	1.2	ug/kg	
80-62-6	Methyl methacrylate	ND	5.3	1.9	ug/kg	
74-95-3	Methylene bromide	ND	5.3	1.6	ug/kg	
75-09-2	Methylene chloride [a]	24.8	11	4.8	ug/kg	
78-93-3	Methyl ethyl ketone	ND	26	6.4	ug/kg	
1634-04-4	Methyl Tert Butyl Ether	ND	5.3	2.1	ug/kg	
91-20-3	Naphthalene	ND	5.3	2.1	ug/kg	
76-01-7	Pentachloroethane	ND	26	5.3	ug/kg	
107-12-0	Propionitrile	ND	53	17	ug/kg	
103-65-1	n-Propylbenzene	ND	5.3	1.5	ug/kg	
100-42-5	Styrene	ND	5.3	2.7	ug/kg	
630-20-6	1,1,1,2-Tetrachloroethane	ND	5.3	1.1	ug/kg	
71-55-6	1,1,1-Trichloroethane	ND	5.3	1.2	ug/kg	
79-34-5	1,1,2,2-Tetrachloroethane	ND	5.3	1.3	ug/kg	
79-00-5	1,1,2-Trichloroethane	ND	5.3	1.2	ug/kg	
87-61-6	1,2,3-Trichlorobenzene	ND	5.3	1.1	ug/kg	
96-18-4	1,2,3-Trichloropropane	ND	5.3	1.8	ug/kg	
120-82-1	1,2,4-Trichlorobenzene	ND	5.3	1.3	ug/kg	

ND = Not detected MDL - Method Detection Limit
RL = Reporting Limit
E = Indicates value exceeds calibration range

J = Indicates an estimated value
B = Indicates analyte found in associated method blank
N = Indicates presumptive evidence of a compound

Report of Analysis

Client Sample ID:	SS39-DPT-16A		
Lab Sample ID:	F77899-16	**Date Sampled:**	11/08/10
Matrix:	SO - Soil	**Date Received:**	11/09/10
Method:	SW846 8260B	**Percent Solids:**	81.5
Project:	Holloman AFB; Alamogordo, NM		

VOA Special List

CAS No.	Compound	Result	RL	MDL	Units	Q
95-63-6	1,2,4-Trimethylbenzene	ND	5.3	1.2	ug/kg	
108-67-8	1,3,5-Trimethylbenzene	ND	5.3	1.4	ug/kg	
127-18-4	Tetrachloroethylene	ND	5.3	1.1	ug/kg	
108-88-3	Toluene	ND	5.3	1.3	ug/kg	
79-01-6	Trichloroethylene	ND	5.3	1.3	ug/kg	
75-69-4	Trichlorofluoromethane	ND	5.3	2.1	ug/kg	
110-57-6	Trans-1,4-Dichloro-2-Butene	ND	26	5.3	ug/kg	
75-01-4	Vinyl chloride	ND	5.3	1.6	ug/kg	
108-05-4	Vinyl Acetate	ND	26	15	ug/kg	
	m,p-Xylene	ND	11	2.3	ug/kg	
95-47-6	o-Xylene	ND	5.3	1.1	ug/kg	

CAS No.	Surrogate Recoveries	Run# 1	Run# 2	Limits
1868-53-7	Dibromofluoromethane	109%		80-121%
2037-26-5	Toluene-D8	93%		71-130%
460-00-4	4-Bromofluorobenzene	98%		59-148%
17060-07-0	1,2-Dichloroethane-D4	111%		77-123%

(a) Suspected laboratory contaminant.

ND = Not detected MDL - Method Detection Limit
RL = Reporting Limit
E = Indicates value exceeds calibration range

J = Indicates an estimated value
B = Indicates analyte found in associated method blank
N = Indicates presumptive evidence of a compound

Report of Analysis

Client Sample ID:	SS39-DPT-16A		
Lab Sample ID:	F77899-16	**Date Sampled:**	11/08/10
Matrix:	SO - Soil	**Date Received:**	11/09/10
Method:	SW846 8015C	**Percent Solids:**	81.5
Project:	Holloman AFB; Alamogordo, NM		

	File ID	DF	Analyzed	By	Prep Date	Prep Batch	Analytical Batch
Run #1	QR056662.D	1	11/12/10	AH	n/a	n/a	GQR2466
Run #2							

	Initial Weight	Final Volume	Methanol Aliquot
Run #1	5.04 g	5.0 ml	100 ul
Run #2			

CAS No.	Compound	Result	RL	MDL	Units	Q
	TPH-GRO (C6-C10)	ND	7.2	3.6	mg/kg	

CAS No.	Surrogate Recoveries	Run# 1	Run# 2	Limits
460-00-4	4-Bromofluorobenzene	90%		56-136%
98-08-8	aaa-Trifluorotoluene	81%		61-121%

ND = Not detected MDL - Method Detection Limit
RL = Reporting Limit
E = Indicates value exceeds calibration range

J = Indicates an estimated value
B = Indicates analyte found in associated method blank
N = Indicates presumptive evidence of a compound

Report of Analysis

Client Sample ID:	SS39-DPT-16A		
Lab Sample ID:	F77899-16	**Date Sampled:**	11/08/10
Matrix:	SO - Soil	**Date Received:**	11/09/10
Method:	SW846 8015C SW846 3550C	**Percent Solids:**	81.5
Project:	Holloman AFB; Alamogordo, NM		

	File ID	DF	Analyzed	By	Prep Date	Prep Batch	Analytical Batch
Run #1	YY18812.D	1	11/20/10	MV	11/11/10	OP35013	GYY677
Run #2							

	Initial Weight	Final Volume
Run #1	30.1 g	1.0 ml
Run #2		

CAS No.	Compound	Result	RL	MDL	Units	Q
	TPH (C10-C28)	ND	10	4.1	mg/kg	

CAS No.	Surrogate Recoveries	Run# 1	Run# 2	Limits
84-15-1	o-Terphenyl	86%		49-108%

ND = Not detected MDL - Method Detection Limit
RL = Reporting Limit
E = Indicates value exceeds calibration range

J = Indicates an estimated value
B = Indicates analyte found in associated method blank
N = Indicates presumptive evidence of a compound

Report of Analysis

Client Sample ID:	SS39-DPT-16A		
Lab Sample ID:	F77899-16	**Date Sampled:**	11/08/10
Matrix:	SO - Soil	**Date Received:**	11/09/10
		Percent Solids:	81.5
Project:	Holloman AFB; Alamogordo, NM		

Metals Analysis

Analyte	Result	RL	MDL	Units	DF	Prep	Analyzed	By	Method	Prep Method
Arsenic	0.68	0.54	0.11	mg/kg	1	11/10/10	11/10/10	RS	SW846 6010C [1]	SW846 3050B [4]
Barium	43.5	11	0.54	mg/kg	1	11/10/10	11/10/10	RS	SW846 6010C [1]	SW846 3050B [4]
Cadmium	0.42	0.22	0.054	mg/kg	1	11/10/10	11/10/10	RS	SW846 6010C [1]	SW846 3050B [4]
Chromium [a]	3.0 B	5.4	0.54	mg/kg	10	11/10/10	11/11/10	RS	SW846 6010C [2]	SW846 3050B [4]
Lead [a]	1.3 B	4.3	0.22	mg/kg	4	11/10/10	11/11/10	RS	SW846 6010C [2]	SW846 3050B [4]
Mercury	0.0099 U	0.099	0.0099	mg/kg	1	11/18/10	11/18/10	LM	SW846 7471B [3]	SW846 7471B [5]
Selenium [a]	2.2 U	11	2.2	mg/kg	10	11/10/10	11/11/10	RS	SW846 6010C [2]	SW846 3050B [4]
Silver	0.054 U	0.54	0.054	mg/kg	1	11/10/10	11/10/10	RS	SW846 6010C [1]	SW846 3050B [4]

(1) Instrument QC Batch: MA8502
(2) Instrument QC Batch: MA8504
(3) Instrument QC Batch: MA8518
(4) Prep QC Batch: MP19447
(5) Prep QC Batch: MP19500

(a) Elevated reporting limit(s) due to matrix interference.

RL = Reporting Limit
MDL = Method Detection Limit

U = Indicates a result < MDL
B = Indicates a result > = MDL but < RL

Report of Analysis

Client Sample ID:	SS39-DPT-16B		
Lab Sample ID:	F77899-17	**Date Sampled:**	11/08/10
Matrix:	SO - Soil	**Date Received:**	11/09/10
Method:	SW846 8260B	**Percent Solids:**	81.8
Project:	Holloman AFB; Alamogordo, NM		

	File ID	DF	Analyzed	By	Prep Date	Prep Batch	Analytical Batch
Run #1	G0068425.D	1	11/15/10	MM	n/a	n/a	VG2578
Run #2							

	Initial Weight
Run #1	5.53 g
Run #2	

VOA Special List

CAS No.	Compound	Result	RL	MDL	Units	Q
67-64-1	Acetone	ND	55	22	ug/kg	
75-05-8	Acetonitrile	ND	55	20	ug/kg	
107-02-8	Acrolein	ND	28	12	ug/kg	
107-13-1	Acrylonitrile	ND	28	13	ug/kg	
107-05-1	Allyl chloride	ND	28	5.5	ug/kg	
71-43-2	Benzene	ND	5.5	1.7	ug/kg	
100-44-7	Benzyl Chloride	ND	5.5	1.7	ug/kg	
108-86-1	Bromobenzene	ND	5.5	1.5	ug/kg	
74-97-5	Bromochloromethane	ND	5.5	1.5	ug/kg	
75-27-4	Bromodichloromethane	ND	5.5	1.2	ug/kg	
75-25-2	Bromoform	ND	5.5	1.7	ug/kg	
104-51-8	n-Butylbenzene	ND	5.5	1.4	ug/kg	
135-98-8	sec-Butylbenzene	ND	5.5	1.8	ug/kg	
98-06-6	tert-Butylbenzene	ND	5.5	1.3	ug/kg	
108-90-7	Chlorobenzene	ND	5.5	1.1	ug/kg	
75-00-3	Chloroethane	ND	5.5	2.2	ug/kg	
67-66-3	Chloroform	ND	5.5	1.3	ug/kg	
544-10-5	1-Chlorohexane	ND	5.5	1.5	ug/kg	
95-49-8	o-Chlorotoluene	ND	5.5	1.3	ug/kg	
106-43-4	p-Chlorotoluene	ND	5.5	1.3	ug/kg	
110-75-8	2-Chloroethyl vinyl ether	ND	28	11	ug/kg	
75-15-0	Carbon disulfide	ND	5.5	2.2	ug/kg	
56-23-5	Carbon tetrachloride	ND	5.5	2.0	ug/kg	
75-34-3	1,1-Dichloroethane	ND	5.5	1.2	ug/kg	
75-35-4	1,1-Dichloroethylene	ND	5.5	1.5	ug/kg	
563-58-6	1,1-Dichloropropene	ND	5.5	1.4	ug/kg	
96-12-8	1,2-Dibromo-3-chloropropane	ND	5.5	2.5	ug/kg	
106-93-4	1,2-Dibromoethane	ND	5.5	1.1	ug/kg	
107-06-2	1,2-Dichloroethane	ND	5.5	1.1	ug/kg	
78-87-5	1,2-Dichloropropane	ND	5.5	1.3	ug/kg	
142-28-9	1,3-Dichloropropane	ND	5.5	1.1	ug/kg	
594-20-7	2,2-Dichloropropane	ND	5.5	1.5	ug/kg	

ND = Not detected MDL - Method Detection Limit
RL = Reporting Limit
E = Indicates value exceeds calibration range

J = Indicates an estimated value
B = Indicates analyte found in associated method blank
N = Indicates presumptive evidence of a compound

Report of Analysis

Client Sample ID:	SS39-DPT-16B		
Lab Sample ID:	F77899-17	**Date Sampled:**	11/08/10
Matrix:	SO - Soil	**Date Received:**	11/09/10
Method:	SW846 8260B	**Percent Solids:**	81.8
Project:	Holloman AFB; Alamogordo, NM		

VOA Special List

CAS No.	Compound	Result	RL	MDL	Units	Q
124-48-1	Dibromochloromethane	ND	5.5	1.1	ug/kg	
75-71-8	Dichlorodifluoromethane	ND	5.5	1.7	ug/kg	
156-59-2	cis-1,2-Dichloroethylene	ND	5.5	1.7	ug/kg	
10061-01-5	cis-1,3-Dichloropropene	ND	5.5	1.1	ug/kg	
1476-11-5	cis-1,4-Dichloro-2-Butene	ND	28	5.5	ug/kg	
541-73-1	m-Dichlorobenzene	ND	5.5	1.3	ug/kg	
95-50-1	o-Dichlorobenzene	ND	5.5	1.2	ug/kg	
106-46-7	p-Dichlorobenzene	ND	5.5	1.2	ug/kg	
156-60-5	trans-1,2-Dichloroethylene	ND	5.5	1.7	ug/kg	
10061-02-6	trans-1,3-Dichloropropene	ND	5.5	1.2	ug/kg	
100-41-4	Ethylbenzene	ND	5.5	1.1	ug/kg	
97-63-2	Ethyl methacrylate	ND	28	5.5	ug/kg	
76-13-1	Freon 113	ND	5.5	1.9	ug/kg	
591-78-6	2-Hexanone	ND	28	6.0	ug/kg	
87-68-3	Hexachlorobutadiene	ND	5.5	2.2	ug/kg	
110-54-3	Hexane	ND	5.5	2.1	ug/kg	
98-82-8	Isopropylbenzene	ND	5.5	1.2	ug/kg	
99-87-6	p-Isopropyltoluene	ND	5.5	1.3	ug/kg	
108-10-1	4-Methyl-2-pentanone	ND	28	6.1	ug/kg	
126-98-7	Methacrylonitrile	ND	28	10	ug/kg	
74-83-9	Methyl bromide	ND	5.5	2.2	ug/kg	
74-87-3	Methyl chloride	ND	5.5	2.2	ug/kg	
74-88-4	Methyl iodide	ND	11	1.2	ug/kg	
80-62-6	Methyl methacrylate	ND	5.5	2.0	ug/kg	
74-95-3	Methylene bromide	ND	5.5	1.7	ug/kg	
75-09-2	Methylene chloride [a]	10.5	11	5.1	ug/kg	J
78-93-3	Methyl ethyl ketone	ND	28	6.7	ug/kg	
1634-04-4	Methyl Tert Butyl Ether	ND	5.5	2.2	ug/kg	
91-20-3	Naphthalene	ND	5.5	2.2	ug/kg	
76-01-7	Pentachloroethane	ND	28	5.5	ug/kg	
107-12-0	Propionitrile	ND	55	18	ug/kg	
103-65-1	n-Propylbenzene	ND	5.5	1.5	ug/kg	
100-42-5	Styrene	ND	5.5	2.9	ug/kg	
630-20-6	1,1,1,2-Tetrachloroethane	ND	5.5	1.1	ug/kg	
71-55-6	1,1,1-Trichloroethane	ND	5.5	1.2	ug/kg	
79-34-5	1,1,2,2-Tetrachloroethane	ND	5.5	1.3	ug/kg	
79-00-5	1,1,2-Trichloroethane	ND	5.5	1.2	ug/kg	
87-61-6	1,2,3-Trichlorobenzene	ND	5.5	1.1	ug/kg	
96-18-4	1,2,3-Trichloropropane	ND	5.5	1.9	ug/kg	
120-82-1	1,2,4-Trichlorobenzene	ND	5.5	1.3	ug/kg	

ND = Not detected MDL - Method Detection Limit
RL = Reporting Limit
E = Indicates value exceeds calibration range

J = Indicates an estimated value
B = Indicates analyte found in associated method blank
N = Indicates presumptive evidence of a compound

Report of Analysis

Client Sample ID:	SS39-DPT-16B		
Lab Sample ID:	F77899-17	**Date Sampled:**	11/08/10
Matrix:	SO - Soil	**Date Received:**	11/09/10
Method:	SW846 8260B	**Percent Solids:**	81.8
Project:	Holloman AFB; Alamogordo, NM		

VOA Special List

CAS No.	Compound	Result	RL	MDL	Units	Q
95-63-6	1,2,4-Trimethylbenzene	ND	5.5	1.2	ug/kg	
108-67-8	1,3,5-Trimethylbenzene	ND	5.5	1.4	ug/kg	
127-18-4	Tetrachloroethylene	ND	5.5	1.1	ug/kg	
108-88-3	Toluene	ND	5.5	1.3	ug/kg	
79-01-6	Trichloroethylene	ND	5.5	1.3	ug/kg	
75-69-4	Trichlorofluoromethane	ND	5.5	2.2	ug/kg	
110-57-6	Trans-1,4-Dichloro-2-Butene	ND	28	5.5	ug/kg	
75-01-4	Vinyl chloride	ND	5.5	1.7	ug/kg	
108-05-4	Vinyl Acetate	ND	28	15	ug/kg	
	m,p-Xylene	ND	11	2.4	ug/kg	
95-47-6	o-Xylene	ND	5.5	1.1	ug/kg	

CAS No.	Surrogate Recoveries	Run# 1	Run# 2	Limits
1868-53-7	Dibromofluoromethane	110%		80-121%
2037-26-5	Toluene-D8	96%		71-130%
460-00-4	4-Bromofluorobenzene	91%		59-148%
17060-07-0	1,2-Dichloroethane-D4	113%		77-123%

(a) Suspected laboratory contaminant.

ND = Not detected MDL - Method Detection Limit
RL = Reporting Limit
E = Indicates value exceeds calibration range

J = Indicates an estimated value
B = Indicates analyte found in associated method blank
N = Indicates presumptive evidence of a compound

Report of Analysis

Client Sample ID:	SS39-DPT-16B		
Lab Sample ID:	F77899-17	**Date Sampled:**	11/08/10
Matrix:	SO - Soil	**Date Received:**	11/09/10
Method:	SW846 8015C	**Percent Solids:**	81.8
Project:	Holloman AFB; Alamogordo, NM		

	File ID	DF	Analyzed	By	Prep Date	Prep Batch	Analytical Batch
Run #1	QR056663.D	1	11/12/10	AH	n/a	n/a	GQR2466
Run #2							

	Initial Weight	Final Volume	Methanol Aliquot
Run #1	6.52 g	5.0 ml	100 ul
Run #2			

CAS No.	Compound	Result	RL	MDL	Units	Q
	TPH-GRO (C6-C10)	ND	5.8	2.9	mg/kg	

CAS No.	Surrogate Recoveries	Run# 1	Run# 2	Limits
460-00-4	4-Bromofluorobenzene	88%		56-136%
98-08-8	aaa-Trifluorotoluene	77%		61-121%

ND = Not detected MDL - Method Detection Limit
RL = Reporting Limit
E = Indicates value exceeds calibration range

J = Indicates an estimated value
B = Indicates analyte found in associated method blank
N = Indicates presumptive evidence of a compound

Report of Analysis

Client Sample ID:	SS39-DPT-16B		
Lab Sample ID:	F77899-17	**Date Sampled:**	11/08/10
Matrix:	SO - Soil	**Date Received:**	11/09/10
Method:	SW846 8015C SW846 3550C	**Percent Solids:**	81.8
Project:	Holloman AFB; Alamogordo, NM		

	File ID	DF	Analyzed	By	Prep Date	Prep Batch	Analytical Batch
Run #1	YY18813.D	1	11/20/10	MV	11/11/10	OP35013	GYY677
Run #2							

	Initial Weight	Final Volume
Run #1	30.4 g	1.0 ml
Run #2		

CAS No.	Compound	Result	RL	MDL	Units	Q
	TPH (C10-C28)	ND	10	4.0	mg/kg	

CAS No.	Surrogate Recoveries	Run# 1	Run# 2	Limits
84-15-1	o-Terphenyl	96%		49-108%

ND = Not detected MDL - Method Detection Limit
RL = Reporting Limit
E = Indicates value exceeds calibration range

J = Indicates an estimated value
B = Indicates analyte found in associated method blank
N = Indicates presumptive evidence of a compound

Report of Analysis

Client Sample ID:	SS39-DPT-16B		
Lab Sample ID:	F77899-17	**Date Sampled:**	11/08/10
Matrix:	SO - Soil	**Date Received:**	11/09/10
		Percent Solids:	81.8
Project:	Holloman AFB; Alamogordo, NM		

Metals Analysis

Analyte	Result	RL	MDL	Units	DF	Prep	Analyzed	By	Method	Prep Method
Arsenic	0.70	0.54	0.11	mg/kg	1	11/11/10	11/11/10	RS	SW846 6010C [1]	SW846 3050B [4]
Barium	28.5	11	0.54	mg/kg	1	11/11/10	11/11/10	RS	SW846 6010C [1]	SW846 3050B [4]
Cadmium	0.054 U	0.22	0.054	mg/kg	1	11/11/10	11/11/10	RS	SW846 6010C [1]	SW846 3050B [4]
Chromium [a]	3.1 B	5.4	0.54	mg/kg	10	11/11/10	11/12/10	RS	SW846 6010C [2]	SW846 3050B [4]
Lead	1.1	1.1	0.054	mg/kg	1	11/11/10	11/11/10	RS	SW846 6010C [1]	SW846 3050B [4]
Mercury	0.018 B	0.10	0.010	mg/kg	1	11/18/10	11/18/10	LM	SW846 7471B [3]	SW846 7471B [5]
Selenium [a]	2.2 U	11	2.2	mg/kg	10	11/11/10	11/12/10	RS	SW846 6010C [2]	SW846 3050B [4]
Silver	0.054 U	0.54	0.054	mg/kg	1	11/11/10	11/11/10	RS	SW846 6010C [1]	SW846 3050B [4]

(1) Instrument QC Batch: MA8504
(2) Instrument QC Batch: MA8509
(3) Instrument QC Batch: MA8518
(4) Prep QC Batch: MP19456
(5) Prep QC Batch: MP19500

(a) Elevated reporting limit(s) due to matrix interference.

RL = Reporting Limit
MDL = Method Detection Limit

U = Indicates a result < MDL
B = Indicates a result > = MDL but < RL

Report of Analysis

Client Sample ID:	SS39-DPT-16C		
Lab Sample ID:	F77899-18	**Date Sampled:**	11/08/10
Matrix:	SO - Soil	**Date Received:**	11/09/10
Method:	SW846 8260B	**Percent Solids:**	79.8
Project:	Holloman AFB; Alamogordo, NM		

	File ID	DF	Analyzed	By	Prep Date	Prep Batch	Analytical Batch
Run #1	G0068426.D	1	11/15/10	MM	n/a	n/a	VG2578
Run #2							

	Initial Weight
Run #1	6.38 g
Run #2	

VOA Special List

CAS No.	Compound	Result	RL	MDL	Units	Q
67-64-1	Acetone	ND	49	20	ug/kg	
75-05-8	Acetonitrile	ND	49	18	ug/kg	
107-02-8	Acrolein	ND	25	11	ug/kg	
107-13-1	Acrylonitrile	ND	25	11	ug/kg	
107-05-1	Allyl chloride	ND	25	4.9	ug/kg	
71-43-2	Benzene	ND	4.9	1.5	ug/kg	
100-44-7	Benzyl Chloride	ND	4.9	1.5	ug/kg	
108-86-1	Bromobenzene	ND	4.9	1.4	ug/kg	
74-97-5	Bromochloromethane	ND	4.9	1.4	ug/kg	
75-27-4	Bromodichloromethane	ND	4.9	1.1	ug/kg	
75-25-2	Bromoform	ND	4.9	1.5	ug/kg	
104-51-8	n-Butylbenzene	ND	4.9	1.3	ug/kg	
135-98-8	sec-Butylbenzene	ND	4.9	1.6	ug/kg	
98-06-6	tert-Butylbenzene	ND	4.9	1.2	ug/kg	
108-90-7	Chlorobenzene	ND	4.9	0.98	ug/kg	
75-00-3	Chloroethane	ND	4.9	2.0	ug/kg	
67-66-3	Chloroform	ND	4.9	1.2	ug/kg	
544-10-5	1-Chlorohexane	ND	4.9	1.4	ug/kg	
95-49-8	o-Chlorotoluene	ND	4.9	1.2	ug/kg	
106-43-4	p-Chlorotoluene	ND	4.9	1.2	ug/kg	
110-75-8	2-Chloroethyl vinyl ether	ND	25	9.8	ug/kg	
75-15-0	Carbon disulfide	ND	4.9	2.0	ug/kg	
56-23-5	Carbon tetrachloride	ND	4.9	1.8	ug/kg	
75-34-3	1,1-Dichloroethane	ND	4.9	1.1	ug/kg	
75-35-4	1,1-Dichloroethylene	ND	4.9	1.4	ug/kg	
563-58-6	1,1-Dichloropropene	ND	4.9	1.3	ug/kg	
96-12-8	1,2-Dibromo-3-chloropropane	ND	4.9	2.3	ug/kg	
106-93-4	1,2-Dibromoethane	ND	4.9	0.98	ug/kg	
107-06-2	1,2-Dichloroethane	ND	4.9	0.98	ug/kg	
78-87-5	1,2-Dichloropropane	ND	4.9	1.2	ug/kg	
142-28-9	1,3-Dichloropropane	ND	4.9	0.98	ug/kg	
594-20-7	2,2-Dichloropropane	ND	4.9	1.4	ug/kg	

ND = Not detected MDL - Method Detection Limit
RL = Reporting Limit
E = Indicates value exceeds calibration range

J = Indicates an estimated value
B = Indicates analyte found in associated method blank
N = Indicates presumptive evidence of a compound

Report of Analysis

Client Sample ID:	SS39-DPT-16C		
Lab Sample ID:	F77899-18	**Date Sampled:**	11/08/10
Matrix:	SO - Soil	**Date Received:**	11/09/10
Method:	SW846 8260B	**Percent Solids:**	79.8
Project:	Holloman AFB; Alamogordo, NM		

VOA Special List

CAS No.	Compound	Result	RL	MDL	Units	Q
124-48-1	Dibromochloromethane	ND	4.9	0.98	ug/kg	
75-71-8	Dichlorodifluoromethane	ND	4.9	1.5	ug/kg	
156-59-2	cis-1,2-Dichloroethylene	ND	4.9	1.5	ug/kg	
10061-01-5	cis-1,3-Dichloropropene	ND	4.9	0.98	ug/kg	
1476-11-5	cis-1,4-Dichloro-2-Butene	ND	25	4.9	ug/kg	
541-73-1	m-Dichlorobenzene	ND	4.9	1.2	ug/kg	
95-50-1	o-Dichlorobenzene	ND	4.9	1.1	ug/kg	
106-46-7	p-Dichlorobenzene	ND	4.9	1.1	ug/kg	
156-60-5	trans-1,2-Dichloroethylene	ND	4.9	1.5	ug/kg	
10061-02-6	trans-1,3-Dichloropropene	ND	4.9	1.1	ug/kg	
100-41-4	Ethylbenzene	ND	4.9	0.98	ug/kg	
97-63-2	Ethyl methacrylate	ND	25	4.9	ug/kg	
76-13-1	Freon 113	ND	4.9	1.7	ug/kg	
591-78-6	2-Hexanone	ND	25	5.3	ug/kg	
87-68-3	Hexachlorobutadiene	ND	4.9	2.0	ug/kg	
110-54-3	Hexane	ND	4.9	1.9	ug/kg	
98-82-8	Isopropylbenzene	ND	4.9	1.1	ug/kg	
99-87-6	p-Isopropyltoluene	ND	4.9	1.2	ug/kg	
108-10-1	4-Methyl-2-pentanone	ND	25	5.4	ug/kg	
126-98-7	Methacrylonitrile	ND	25	9.0	ug/kg	
74-83-9	Methyl bromide	ND	4.9	2.0	ug/kg	
74-87-3	Methyl chloride	ND	4.9	2.0	ug/kg	
74-88-4	Methyl iodide	ND	9.8	1.1	ug/kg	
80-62-6	Methyl methacrylate	ND	4.9	1.8	ug/kg	
74-95-3	Methylene bromide	ND	4.9	1.5	ug/kg	
75-09-2	Methylene chloride [a]	15.1	9.8	4.5	ug/kg	
78-93-3	Methyl ethyl ketone	ND	25	6.0	ug/kg	
1634-04-4	Methyl Tert Butyl Ether	ND	4.9	2.0	ug/kg	
91-20-3	Naphthalene	ND	4.9	2.0	ug/kg	
76-01-7	Pentachloroethane	ND	25	4.9	ug/kg	
107-12-0	Propionitrile	ND	49	16	ug/kg	
103-65-1	n-Propylbenzene	ND	4.9	1.4	ug/kg	
100-42-5	Styrene	ND	4.9	2.6	ug/kg	
630-20-6	1,1,1,2-Tetrachloroethane	ND	4.9	0.98	ug/kg	
71-55-6	1,1,1-Trichloroethane	ND	4.9	1.1	ug/kg	
79-34-5	1,1,2,2-Tetrachloroethane	ND	4.9	1.2	ug/kg	
79-00-5	1,1,2-Trichloroethane	ND	4.9	1.1	ug/kg	
87-61-6	1,2,3-Trichlorobenzene	ND	4.9	0.98	ug/kg	
96-18-4	1,2,3-Trichloropropane	ND	4.9	1.7	ug/kg	
120-82-1	1,2,4-Trichlorobenzene	ND	4.9	1.2	ug/kg	

ND = Not detected MDL - Method Detection Limit
RL = Reporting Limit
E = Indicates value exceeds calibration range

J = Indicates an estimated value
B = Indicates analyte found in associated method blank
N = Indicates presumptive evidence of a compound

Report of Analysis

Client Sample ID:	SS39-DPT-16C		
Lab Sample ID:	F77899-18	**Date Sampled:**	11/08/10
Matrix:	SO - Soil	**Date Received:**	11/09/10
Method:	SW846 8260B	**Percent Solids:**	79.8
Project:	Holloman AFB; Alamogordo, NM		

VOA Special List

CAS No.	Compound	Result	RL	MDL	Units	Q
95-63-6	1,2,4-Trimethylbenzene	ND	4.9	1.1	ug/kg	
108-67-8	1,3,5-Trimethylbenzene	ND	4.9	1.3	ug/kg	
127-18-4	Tetrachloroethylene	ND	4.9	0.98	ug/kg	
108-88-3	Toluene	ND	4.9	1.2	ug/kg	
79-01-6	Trichloroethylene	ND	4.9	1.2	ug/kg	
75-69-4	Trichlorofluoromethane	ND	4.9	2.0	ug/kg	
110-57-6	Trans-1,4-Dichloro-2-Butene	ND	25	4.9	ug/kg	
75-01-4	Vinyl chloride	ND	4.9	1.5	ug/kg	
108-05-4	Vinyl Acetate	ND	25	14	ug/kg	
	m,p-Xylene	ND	9.8	2.2	ug/kg	
95-47-6	o-Xylene	ND	4.9	0.98	ug/kg	

CAS No.	Surrogate Recoveries	Run# 1	Run# 2	Limits
1868-53-7	Dibromofluoromethane	118%		80-121%
2037-26-5	Toluene-D8	94%		71-130%
460-00-4	4-Bromofluorobenzene	94%		59-148%
17060-07-0	1,2-Dichloroethane-D4	117%		77-123%

(a) Suspected laboratory contaminant.

ND = Not detected MDL - Method Detection Limit
RL = Reporting Limit
E = Indicates value exceeds calibration range

J = Indicates an estimated value
B = Indicates analyte found in associated method blank
N = Indicates presumptive evidence of a compound

Report of Analysis

Client Sample ID:	SS39-DPT-16C		
Lab Sample ID:	F77899-18	**Date Sampled:**	11/08/10
Matrix:	SO - Soil	**Date Received:**	11/09/10
Method:	SW846 8015C	**Percent Solids:**	79.8
Project:	Holloman AFB; Alamogordo, NM		

	File ID	DF	Analyzed	By	Prep Date	Prep Batch	Analytical Batch
Run #1	QR056664.D	1	11/13/10	AH	n/a	n/a	GQR2466
Run #2							

	Initial Weight	Final Volume	Methanol Aliquot
Run #1	7.01 g	5.0 ml	100 ul
Run #2			

CAS No.	Compound	Result	RL	MDL	Units	Q
	TPH-GRO (C6-C10)	ND	5.7	2.9	mg/kg	

CAS No.	Surrogate Recoveries	Run# 1	Run# 2	Limits
460-00-4	4-Bromofluorobenzene	87%		56-136%
98-08-8	aaa-Trifluorotoluene	79%		61-121%

ND = Not detected MDL - Method Detection Limit
RL = Reporting Limit
E = Indicates value exceeds calibration range

J = Indicates an estimated value
B = Indicates analyte found in associated method blank
N = Indicates presumptive evidence of a compound

Report of Analysis

Client Sample ID:	SS39-DPT-16C		
Lab Sample ID:	F77899-18	**Date Sampled:**	11/08/10
Matrix:	SO - Soil	**Date Received:**	11/09/10
Method:	SW846 8015C SW846 3550C	**Percent Solids:**	79.8
Project:	Holloman AFB; Alamogordo, NM		

	File ID	DF	Analyzed	By	Prep Date	Prep Batch	Analytical Batch
Run #1	YY18763.D	1	11/19/10	MV	11/16/10	OP35064	GYY677
Run #2							

	Initial Weight	Final Volume
Run #1	29.8 g	1.0 ml
Run #2		

CAS No.	Compound	Result	RL	MDL	Units	Q
	TPH (C10-C28)	ND	11	4.2	mg/kg	

CAS No.	Surrogate Recoveries	Run# 1	Run# 2	Limits
84-15-1	o-Terphenyl	93%		49-108%

ND = Not detected MDL - Method Detection Limit
RL = Reporting Limit
E = Indicates value exceeds calibration range

J = Indicates an estimated value
B = Indicates analyte found in associated method blank
N = Indicates presumptive evidence of a compound

Report of Analysis

Client Sample ID:	SS39-DPT-16C		
Lab Sample ID:	F77899-18	**Date Sampled:**	11/08/10
Matrix:	SO - Soil	**Date Received:**	11/09/10
		Percent Solids:	79.8
Project:	Holloman AFB; Alamogordo, NM		

Metals Analysis

Analyte	Result	RL	MDL	Units	DF	Prep	Analyzed	By	Method	Prep Method
Arsenic	0.95	0.57	0.11	mg/kg	1	11/11/10	11/11/10	RS	SW846 6010C [1]	SW846 3050B [4]
Barium	42.9	11	0.57	mg/kg	1	11/11/10	11/11/10	RS	SW846 6010C [1]	SW846 3050B [4]
Cadmium	0.14 B	0.23	0.057	mg/kg	1	11/11/10	11/11/10	RS	SW846 6010C [1]	SW846 3050B [4]
Chromium [a]	4.1 B	5.7	0.57	mg/kg	10	11/11/10	11/12/10	RS	SW846 6010C [2]	SW846 3050B [4]
Lead	1.6	1.1	0.057	mg/kg	1	11/11/10	11/11/10	RS	SW846 6010C [1]	SW846 3050B [4]
Mercury	0.0099 U	0.099	0.0099	mg/kg	1	11/18/10	11/18/10	LM	SW846 7471B [3]	SW846 7471B [5]
Selenium [a]	2.3 U	11	2.3	mg/kg	10	11/11/10	11/12/10	RS	SW846 6010C [2]	SW846 3050B [4]
Silver	0.057 U	0.57	0.057	mg/kg	1	11/11/10	11/11/10	RS	SW846 6010C [1]	SW846 3050B [4]

(1) Instrument QC Batch: MA8504
(2) Instrument QC Batch: MA8509
(3) Instrument QC Batch: MA8518
(4) Prep QC Batch: MP19456
(5) Prep QC Batch: MP19500

(a) Elevated reporting limit(s) due to matrix interference.

RL = Reporting Limit
MDL = Method Detection Limit

U = Indicates a result < MDL
B = Indicates a result > = MDL but < RL

Report of Analysis

Client Sample ID:	SS39-DPT-DUP04		
Lab Sample ID:	F77899-19	**Date Sampled:**	11/08/10
Matrix:	SO - Soil	**Date Received:**	11/09/10
Method:	SW846 8260B	**Percent Solids:**	76.0
Project:	Holloman AFB; Alamogordo, NM		

	File ID	DF	Analyzed	By	Prep Date	Prep Batch	Analytical Batch
Run #1	G0068427.D	1	11/15/10	MM	n/a	n/a	VG2578
Run #2							

	Initial Weight
Run #1	7.13 g
Run #2	

VOA Special List

CAS No.	Compound	Result	RL	MDL	Units	Q
67-64-1	Acetone	ND	46	18	ug/kg	
75-05-8	Acetonitrile	ND	46	17	ug/kg	
107-02-8	Acrolein	ND	23	10	ug/kg	
107-13-1	Acrylonitrile	ND	23	11	ug/kg	
107-05-1	Allyl chloride	ND	23	4.6	ug/kg	
71-43-2	Benzene	ND	4.6	1.4	ug/kg	
100-44-7	Benzyl Chloride	ND	4.6	1.4	ug/kg	
108-86-1	Bromobenzene	ND	4.6	1.3	ug/kg	
74-97-5	Bromochloromethane	ND	4.6	1.3	ug/kg	
75-27-4	Bromodichloromethane	ND	4.6	1.0	ug/kg	
75-25-2	Bromoform	ND	4.6	1.4	ug/kg	
104-51-8	n-Butylbenzene	ND	4.6	1.2	ug/kg	
135-98-8	sec-Butylbenzene	ND	4.6	1.5	ug/kg	
98-06-6	tert-Butylbenzene	ND	4.6	1.1	ug/kg	
108-90-7	Chlorobenzene	ND	4.6	0.92	ug/kg	
75-00-3	Chloroethane	ND	4.6	1.8	ug/kg	
67-66-3	Chloroform	ND	4.6	1.1	ug/kg	
544-10-5	1-Chlorohexane	ND	4.6	1.3	ug/kg	
95-49-8	o-Chlorotoluene	ND	4.6	1.1	ug/kg	
106-43-4	p-Chlorotoluene	ND	4.6	1.1	ug/kg	
110-75-8	2-Chloroethyl vinyl ether	ND	23	9.2	ug/kg	
75-15-0	Carbon disulfide	ND	4.6	1.8	ug/kg	
56-23-5	Carbon tetrachloride	ND	4.6	1.7	ug/kg	
75-34-3	1,1-Dichloroethane	ND	4.6	1.0	ug/kg	
75-35-4	1,1-Dichloroethylene	ND	4.6	1.3	ug/kg	
563-58-6	1,1-Dichloropropene	ND	4.6	1.2	ug/kg	
96-12-8	1,2-Dibromo-3-chloropropane	ND	4.6	2.1	ug/kg	
106-93-4	1,2-Dibromoethane	ND	4.6	0.92	ug/kg	
107-06-2	1,2-Dichloroethane	ND	4.6	0.92	ug/kg	
78-87-5	1,2-Dichloropropane	ND	4.6	1.1	ug/kg	
142-28-9	1,3-Dichloropropane	ND	4.6	0.92	ug/kg	
594-20-7	2,2-Dichloropropane	ND	4.6	1.3	ug/kg	

ND = Not detected MDL - Method Detection Limit
RL = Reporting Limit
E = Indicates value exceeds calibration range

J = Indicates an estimated value
B = Indicates analyte found in associated method blank
N = Indicates presumptive evidence of a compound

Report of Analysis

Client Sample ID:	SS39-DPT-DUP04		
Lab Sample ID:	F77899-19	**Date Sampled:**	11/08/10
Matrix:	SO - Soil	**Date Received:**	11/09/10
Method:	SW846 8260B	**Percent Solids:**	76.0
Project:	Holloman AFB; Alamogordo, NM		

VOA Special List

CAS No.	Compound	Result	RL	MDL	Units	Q
124-48-1	Dibromochloromethane	ND	4.6	0.92	ug/kg	
75-71-8	Dichlorodifluoromethane	ND	4.6	1.4	ug/kg	
156-59-2	cis-1,2-Dichloroethylene	ND	4.6	1.4	ug/kg	
10061-01-5	cis-1,3-Dichloropropene	ND	4.6	0.92	ug/kg	
1476-11-5	cis-1,4-Dichloro-2-Butene	ND	23	4.6	ug/kg	
541-73-1	m-Dichlorobenzene	ND	4.6	1.1	ug/kg	
95-50-1	o-Dichlorobenzene	ND	4.6	1.0	ug/kg	
106-46-7	p-Dichlorobenzene	ND	4.6	1.0	ug/kg	
156-60-5	trans-1,2-Dichloroethylene	ND	4.6	1.4	ug/kg	
10061-02-6	trans-1,3-Dichloropropene	ND	4.6	1.0	ug/kg	
100-41-4	Ethylbenzene	ND	4.6	0.92	ug/kg	
97-63-2	Ethyl methacrylate	ND	23	4.6	ug/kg	
76-13-1	Freon 113	ND	4.6	1.6	ug/kg	
591-78-6	2-Hexanone	ND	23	5.0	ug/kg	
87-68-3	Hexachlorobutadiene	ND	4.6	1.8	ug/kg	
110-54-3	Hexane	ND	4.6	1.8	ug/kg	
98-82-8	Isopropylbenzene	ND	4.6	1.0	ug/kg	
99-87-6	p-Isopropyltoluene	ND	4.6	1.1	ug/kg	
108-10-1	4-Methyl-2-pentanone	ND	23	5.1	ug/kg	
126-98-7	Methacrylonitrile	ND	23	8.5	ug/kg	
74-83-9	Methyl bromide	ND	4.6	1.8	ug/kg	
74-87-3	Methyl chloride	ND	4.6	1.8	ug/kg	
74-88-4	Methyl iodide	ND	9.2	1.0	ug/kg	
80-62-6	Methyl methacrylate	ND	4.6	1.7	ug/kg	
74-95-3	Methylene bromide	ND	4.6	1.4	ug/kg	
75-09-2	Methylene chloride [a]	8.5	9.2	4.2	ug/kg	J
78-93-3	Methyl ethyl ketone	ND	23	5.6	ug/kg	
1634-04-4	Methyl Tert Butyl Ether	ND	4.6	1.8	ug/kg	
91-20-3	Naphthalene	ND	4.6	1.8	ug/kg	
76-01-7	Pentachloroethane	ND	23	4.6	ug/kg	
107-12-0	Propionitrile	ND	46	15	ug/kg	
103-65-1	n-Propylbenzene	ND	4.6	1.3	ug/kg	
100-42-5	Styrene	ND	4.6	2.4	ug/kg	
630-20-6	1,1,1,2-Tetrachloroethane	ND	4.6	0.92	ug/kg	
71-55-6	1,1,1-Trichloroethane	ND	4.6	1.0	ug/kg	
79-34-5	1,1,2,2-Tetrachloroethane	ND	4.6	1.1	ug/kg	
79-00-5	1,1,2-Trichloroethane	ND	4.6	1.0	ug/kg	
87-61-6	1,2,3-Trichlorobenzene	ND	4.6	0.92	ug/kg	
96-18-4	1,2,3-Trichloropropane	ND	4.6	1.6	ug/kg	
120-82-1	1,2,4-Trichlorobenzene	ND	4.6	1.1	ug/kg	

ND = Not detected MDL - Method Detection Limit
RL = Reporting Limit
E = Indicates value exceeds calibration range

J = Indicates an estimated value
B = Indicates analyte found in associated method blank
N = Indicates presumptive evidence of a compound

Report of Analysis

Client Sample ID:	SS39-DPT-DUP04		
Lab Sample ID:	F77899-19	**Date Sampled:**	11/08/10
Matrix:	SO - Soil	**Date Received:**	11/09/10
Method:	SW846 8260B	**Percent Solids:**	76.0
Project:	Holloman AFB; Alamogordo, NM		

VOA Special List

CAS No.	Compound	Result	RL	MDL	Units	Q
95-63-6	1,2,4-Trimethylbenzene	ND	4.6	1.0	ug/kg	
108-67-8	1,3,5-Trimethylbenzene	ND	4.6	1.2	ug/kg	
127-18-4	Tetrachloroethylene	ND	4.6	0.92	ug/kg	
108-88-3	Toluene	ND	4.6	1.1	ug/kg	
79-01-6	Trichloroethylene	ND	4.6	1.1	ug/kg	
75-69-4	Trichlorofluoromethane	ND	4.6	1.8	ug/kg	
110-57-6	Trans-1,4-Dichloro-2-Butene	ND	23	4.6	ug/kg	
75-01-4	Vinyl chloride	ND	4.6	1.4	ug/kg	
108-05-4	Vinyl Acetate	ND	23	13	ug/kg	
	m,p-Xylene	ND	9.2	2.0	ug/kg	
95-47-6	o-Xylene	ND	4.6	0.92	ug/kg	

CAS No.	Surrogate Recoveries	Run# 1	Run# 2	Limits
1868-53-7	Dibromofluoromethane	119%		80-121%
2037-26-5	Toluene-D8	92%		71-130%
460-00-4	4-Bromofluorobenzene	93%		59-148%
17060-07-0	1,2-Dichloroethane-D4	111%		77-123%

(a) Suspected laboratory contaminant.

ND = Not detected MDL - Method Detection Limit
RL = Reporting Limit
E = Indicates value exceeds calibration range

J = Indicates an estimated value
B = Indicates analyte found in associated method blank
N = Indicates presumptive evidence of a compound

Report of Analysis

Client Sample ID:	SS39-DPT-DUP04		
Lab Sample ID:	F77899-19	**Date Sampled:**	11/08/10
Matrix:	SO - Soil	**Date Received:**	11/09/10
Method:	SW846 8015C	**Percent Solids:**	76.0
Project:	Holloman AFB; Alamogordo, NM		

	File ID	DF	Analyzed	By	Prep Date	Prep Batch	Analytical Batch
Run #1	QR056665.D	1	11/13/10	AH	n/a	n/a	GQR2466
Run #2							

	Initial Weight	Final Volume	Methanol Aliquot
Run #1	7.27 g	5.0 ml	100 ul
Run #2			

CAS No.	Compound	Result	RL	MDL	Units	Q
	TPH-GRO (C6-C10)	ND	6.1	3.1	mg/kg	

CAS No.	Surrogate Recoveries	Run# 1	Run# 2	Limits
460-00-4	4-Bromofluorobenzene	85%		56-136%
98-08-8	aaa-Trifluorotoluene	78%		61-121%

ND = Not detected MDL - Method Detection Limit
RL = Reporting Limit
E = Indicates value exceeds calibration range

J = Indicates an estimated value
B = Indicates analyte found in associated method blank
N = Indicates presumptive evidence of a compound

Report of Analysis

Client Sample ID:	SS39-DPT-DUP04		
Lab Sample ID:	F77899-19	**Date Sampled:**	11/08/10
Matrix:	SO - Soil	**Date Received:**	11/09/10
Method:	SW846 8015C SW846 3550C	**Percent Solids:**	76.0
Project:	Holloman AFB; Alamogordo, NM		

	File ID	DF	Analyzed	By	Prep Date	Prep Batch	Analytical Batch
Run #1	YY18764.D	1	11/19/10	MV	11/16/10	OP35064	GYY677
Run #2							

	Initial Weight	Final Volume
Run #1	30.4 g	1.0 ml
Run #2		

CAS No.	Compound	Result	RL	MDL	Units	Q
	TPH (C10-C28)	ND	11	4.3	mg/kg	

CAS No.	Surrogate Recoveries	Run# 1	Run# 2	Limits
84-15-1	o-Terphenyl	102%		49-108%

ND = Not detected MDL - Method Detection Limit
RL = Reporting Limit
E = Indicates value exceeds calibration range

J = Indicates an estimated value
B = Indicates analyte found in associated method blank
N = Indicates presumptive evidence of a compound

Report of Analysis

Client Sample ID:	SS39-DPT-DUP04		
Lab Sample ID:	F77899-19	**Date Sampled:**	11/08/10
Matrix:	SO - Soil	**Date Received:**	11/09/10
		Percent Solids:	76.0
Project:	Holloman AFB; Alamogordo, NM		

Metals Analysis

Analyte	Result	RL	MDL	Units	DF	Prep	Analyzed	By	Method	Prep Method
Arsenic	0.92	0.45	0.091	mg/kg	1	11/11/10	11/11/10	RS	SW846 6010C [1]	SW846 3050B [4]
Barium	27.1	9.1	0.45	mg/kg	1	11/11/10	11/11/10	RS	SW846 6010C [1]	SW846 3050B [4]
Cadmium	0.095 B	0.18	0.045	mg/kg	1	11/11/10	11/11/10	RS	SW846 6010C [1]	SW846 3050B [4]
Chromium [a]	3.2 B	4.5	0.45	mg/kg	10	11/11/10	11/12/10	RS	SW846 6010C [2]	SW846 3050B [4]
Lead	0.91	0.91	0.045	mg/kg	1	11/11/10	11/11/10	RS	SW846 6010C [1]	SW846 3050B [4]
Mercury	0.0095 U	0.095	0.0095	mg/kg	1	11/18/10	11/18/10	LM	SW846 7471B [3]	SW846 7471B [5]
Selenium [a]	1.8 U	9.1	1.8	mg/kg	10	11/11/10	11/12/10	RS	SW846 6010C [2]	SW846 3050B [4]
Silver	0.045 U	0.45	0.045	mg/kg	1	11/11/10	11/11/10	RS	SW846 6010C [1]	SW846 3050B [4]

(1) Instrument QC Batch: MA8504
(2) Instrument QC Batch: MA8509
(3) Instrument QC Batch: MA8518
(4) Prep QC Batch: MP19456
(5) Prep QC Batch: MP19500

(a) Elevated reporting limit(s) due to matrix interference.

RL = Reporting Limit
MDL = Method Detection Limit

U = Indicates a result < MDL
B = Indicates a result > = MDL but < RL

Report of Analysis

Client Sample ID:	SS39-DPT-DUP05		
Lab Sample ID:	F77899-20	**Date Sampled:**	11/08/10
Matrix:	SO - Soil	**Date Received:**	11/09/10
Method:	SW846 8260B	**Percent Solids:**	75.6
Project:	Holloman AFB; Alamogordo, NM		

	File ID	DF	Analyzed	By	Prep Date	Prep Batch	Analytical Batch
Run #1	H066069.D	1	11/16/10	MM	n/a	n/a	VH2461
Run #2							

	Initial Weight
Run #1	7.15 g
Run #2	

VOA Special List

CAS No.	Compound	Result	RL	MDL	Units	Q
67-64-1	Acetone	ND	46	19	ug/kg	
75-05-8	Acetonitrile	ND	46	17	ug/kg	
107-02-8	Acrolein	ND	23	10	ug/kg	
107-13-1	Acrylonitrile	ND	23	11	ug/kg	
107-05-1	Allyl chloride	ND	23	4.6	ug/kg	
71-43-2	Benzene	ND	4.6	1.4	ug/kg	
100-44-7	Benzyl Chloride	ND	4.6	1.4	ug/kg	
108-86-1	Bromobenzene	ND	4.6	1.3	ug/kg	
74-97-5	Bromochloromethane	ND	4.6	1.3	ug/kg	
75-27-4	Bromodichloromethane	ND	4.6	1.0	ug/kg	
75-25-2	Bromoform	ND	4.6	1.4	ug/kg	
104-51-8	n-Butylbenzene	ND	4.6	1.2	ug/kg	
135-98-8	sec-Butylbenzene	ND	4.6	1.5	ug/kg	
98-06-6	tert-Butylbenzene	ND	4.6	1.1	ug/kg	
108-90-7	Chlorobenzene	ND	4.6	0.93	ug/kg	
75-00-3	Chloroethane	ND	4.6	1.9	ug/kg	
67-66-3	Chloroform	ND	4.6	1.1	ug/kg	
544-10-5	1-Chlorohexane	ND	4.6	1.3	ug/kg	
95-49-8	o-Chlorotoluene	ND	4.6	1.1	ug/kg	
106-43-4	p-Chlorotoluene	ND	4.6	1.1	ug/kg	
110-75-8	2-Chloroethyl vinyl ether	ND	23	9.3	ug/kg	
75-15-0	Carbon disulfide	ND	4.6	1.9	ug/kg	
56-23-5	Carbon tetrachloride	ND	4.6	1.7	ug/kg	
75-34-3	1,1-Dichloroethane	ND	4.6	1.0	ug/kg	
75-35-4	1,1-Dichloroethylene	ND	4.6	1.3	ug/kg	
563-58-6	1,1-Dichloropropene	ND	4.6	1.2	ug/kg	
96-12-8	1,2-Dibromo-3-chloropropane	ND	4.6	2.1	ug/kg	
106-93-4	1,2-Dibromoethane	ND	4.6	0.93	ug/kg	
107-06-2	1,2-Dichloroethane	ND	4.6	0.93	ug/kg	
78-87-5	1,2-Dichloropropane	ND	4.6	1.1	ug/kg	
142-28-9	1,3-Dichloropropane	ND	4.6	0.93	ug/kg	
594-20-7	2,2-Dichloropropane	ND	4.6	1.3	ug/kg	

ND = Not detected MDL - Method Detection Limit
RL = Reporting Limit
E = Indicates value exceeds calibration range

J = Indicates an estimated value
B = Indicates analyte found in associated method blank
N = Indicates presumptive evidence of a compound

Report of Analysis

Client Sample ID:	SS39-DPT-DUP05		
Lab Sample ID:	F77899-20	**Date Sampled:**	11/08/10
Matrix:	SO - Soil	**Date Received:**	11/09/10
Method:	SW846 8260B	**Percent Solids:**	75.6
Project:	Holloman AFB; Alamogordo, NM		

VOA Special List

CAS No.	Compound	Result	RL	MDL	Units	Q
124-48-1	Dibromochloromethane	ND	4.6	0.93	ug/kg	
75-71-8	Dichlorodifluoromethane	ND	4.6	1.4	ug/kg	
156-59-2	cis-1,2-Dichloroethylene	ND	4.6	1.4	ug/kg	
10061-01-5	cis-1,3-Dichloropropene	ND	4.6	0.93	ug/kg	
1476-11-5	cis-1,4-Dichloro-2-Butene	ND	23	4.6	ug/kg	
541-73-1	m-Dichlorobenzene	ND	4.6	1.1	ug/kg	
95-50-1	o-Dichlorobenzene	ND	4.6	1.0	ug/kg	
106-46-7	p-Dichlorobenzene	ND	4.6	1.0	ug/kg	
156-60-5	trans-1,2-Dichloroethylene	ND	4.6	1.4	ug/kg	
10061-02-6	trans-1,3-Dichloropropene	ND	4.6	1.0	ug/kg	
100-41-4	Ethylbenzene	ND	4.6	0.93	ug/kg	
97-63-2	Ethyl methacrylate	ND	23	4.6	ug/kg	
76-13-1	Freon 113	ND	4.6	1.6	ug/kg	
591-78-6	2-Hexanone	ND	23	5.0	ug/kg	
87-68-3	Hexachlorobutadiene	ND	4.6	1.9	ug/kg	
110-54-3	Hexane	ND	4.6	1.8	ug/kg	
98-82-8	Isopropylbenzene	ND	4.6	1.0	ug/kg	
99-87-6	p-Isopropyltoluene	ND	4.6	1.1	ug/kg	
108-10-1	4-Methyl-2-pentanone	ND	23	5.1	ug/kg	
126-98-7	Methacrylonitrile	ND	23	8.5	ug/kg	
74-83-9	Methyl bromide	ND	4.6	1.9	ug/kg	
74-87-3	Methyl chloride	ND	4.6	1.9	ug/kg	
74-88-4	Methyl iodide	ND	9.3	1.0	ug/kg	
80-62-6	Methyl methacrylate	ND	4.6	1.7	ug/kg	
74-95-3	Methylene bromide	ND	4.6	1.4	ug/kg	
75-09-2	Methylene chloride	ND	9.3	4.3	ug/kg	
78-93-3	Methyl ethyl ketone	ND	23	5.6	ug/kg	
1634-04-4	Methyl Tert Butyl Ether	ND	4.6	1.9	ug/kg	
91-20-3	Naphthalene	ND	4.6	1.9	ug/kg	
76-01-7	Pentachloroethane	ND	23	4.6	ug/kg	
107-12-0	Propionitrile	ND	46	15	ug/kg	
103-65-1	n-Propylbenzene	ND	4.6	1.3	ug/kg	
100-42-5	Styrene	ND	4.6	2.4	ug/kg	
630-20-6	1,1,1,2-Tetrachloroethane	ND	4.6	0.93	ug/kg	
71-55-6	1,1,1-Trichloroethane	ND	4.6	1.0	ug/kg	
79-34-5	1,1,2,2-Tetrachloroethane	ND	4.6	1.1	ug/kg	
79-00-5	1,1,2-Trichloroethane	ND	4.6	1.0	ug/kg	
87-61-6	1,2,3-Trichlorobenzene	ND	4.6	0.93	ug/kg	
96-18-4	1,2,3-Trichloropropane	ND	4.6	1.6	ug/kg	
120-82-1	1,2,4-Trichlorobenzene	ND	4.6	1.1	ug/kg	

ND = Not detected MDL - Method Detection Limit
RL = Reporting Limit
E = Indicates value exceeds calibration range

J = Indicates an estimated value
B = Indicates analyte found in associated method blank
N = Indicates presumptive evidence of a compound

Report of Analysis

Client Sample ID:	SS39-DPT-DUP05		
Lab Sample ID:	F77899-20	**Date Sampled:**	11/08/10
Matrix:	SO - Soil	**Date Received:**	11/09/10
Method:	SW846 8260B	**Percent Solids:**	75.6
Project:	Holloman AFB; Alamogordo, NM		

VOA Special List

CAS No.	Compound	Result	RL	MDL	Units	Q
95-63-6	1,2,4-Trimethylbenzene	ND	4.6	1.0	ug/kg	
108-67-8	1,3,5-Trimethylbenzene	ND	4.6	1.2	ug/kg	
127-18-4	Tetrachloroethylene	ND	4.6	0.93	ug/kg	
108-88-3	Toluene	ND	4.6	1.1	ug/kg	
79-01-6	Trichloroethylene	ND	4.6	1.1	ug/kg	
75-69-4	Trichlorofluoromethane	ND	4.6	1.9	ug/kg	
110-57-6	Trans-1,4-Dichloro-2-Butene	ND	23	4.6	ug/kg	
75-01-4	Vinyl chloride	ND	4.6	1.4	ug/kg	
108-05-4	Vinyl Acetate	ND	23	13	ug/kg	
	m,p-Xylene	ND	9.3	2.0	ug/kg	
95-47-6	o-Xylene	ND	4.6	0.93	ug/kg	

CAS No.	Surrogate Recoveries	Run# 1	Run# 2	Limits
1868-53-7	Dibromofluoromethane	102%		80-121%
2037-26-5	Toluene-D8	77%		71-130%
460-00-4	4-Bromofluorobenzene	98%		59-148%
17060-07-0	1,2-Dichloroethane-D4	104%		77-123%

ND = Not detected MDL - Method Detection Limit
RL = Reporting Limit
E = Indicates value exceeds calibration range

J = Indicates an estimated value
B = Indicates analyte found in associated method blank
N = Indicates presumptive evidence of a compound

Report of Analysis

Client Sample ID:	SS39-DPT-DUP05		
Lab Sample ID:	F77899-20	**Date Sampled:**	11/08/10
Matrix:	SO - Soil	**Date Received:**	11/09/10
Method:	SW846 8015C	**Percent Solids:**	75.6
Project:	Holloman AFB; Alamogordo, NM		

	File ID	DF	Analyzed	By	Prep Date	Prep Batch	Analytical Batch
Run #1	QR056666.D	1	11/13/10	AH	n/a	n/a	GQR2466
Run #2							

	Initial Weight	Final Volume	Methanol Aliquot
Run #1	7.47 g	5.0 ml	100 ul
Run #2			

CAS No.	Compound	Result	RL	MDL	Units	Q
	TPH-GRO (C6-C10)	ND	6.0	3.0	mg/kg	

CAS No.	Surrogate Recoveries	Run# 1	Run# 2	Limits
460-00-4	4-Bromofluorobenzene	87%		56-136%
98-08-8	aaa-Trifluorotoluene	80%		61-121%

ND = Not detected MDL - Method Detection Limit
RL = Reporting Limit
E = Indicates value exceeds calibration range

J = Indicates an estimated value
B = Indicates analyte found in associated method blank
N = Indicates presumptive evidence of a compound

Report of Analysis

Client Sample ID:	SS39-DPT-DUP05		
Lab Sample ID:	F77899-20	**Date Sampled:**	11/08/10
Matrix:	SO - Soil	**Date Received:**	11/09/10
Method:	SW846 8015C SW846 3550C	**Percent Solids:**	75.6
Project:	Holloman AFB; Alamogordo, NM		

	File ID	DF	Analyzed	By	Prep Date	Prep Batch	Analytical Batch
Run #1	YY18765.D	1	11/19/10	MV	11/16/10	OP35064	GYY677
Run #2							

	Initial Weight	Final Volume
Run #1	30.2 g	1.0 ml
Run #2		

CAS No.	Compound	Result	RL	MDL	Units	Q
	TPH (C10-C28)	ND	11	4.4	mg/kg	

CAS No.	Surrogate Recoveries	Run# 1	Run# 2	Limits
84-15-1	o-Terphenyl	96%		49-108%

ND = Not detected MDL - Method Detection Limit
RL = Reporting Limit
E = Indicates value exceeds calibration range

J = Indicates an estimated value
B = Indicates analyte found in associated method blank
N = Indicates presumptive evidence of a compound

Report of Analysis

Client Sample ID:	SS39-DPT-DUP05		
Lab Sample ID:	F77899-20	**Date Sampled:**	11/08/10
Matrix:	SO - Soil	**Date Received:**	11/09/10
		Percent Solids:	75.6
Project:	Holloman AFB; Alamogordo, NM		

Metals Analysis

Analyte	Result	RL	MDL	Units	DF	Prep	Analyzed	By	Method	Prep Method
Arsenic	1.2	0.59	0.12	mg/kg	1	11/11/10	11/11/10	RS	SW846 6010C [1]	SW846 3050B [4]
Barium	42.6	12	0.59	mg/kg	1	11/11/10	11/11/10	RS	SW846 6010C [1]	SW846 3050B [4]
Cadmium	0.19 B	0.24	0.059	mg/kg	1	11/11/10	11/11/10	RS	SW846 6010C [1]	SW846 3050B [4]
Chromium [a]	3.9 B	5.9	0.59	mg/kg	10	11/11/10	11/12/10	RS	SW846 6010C [2]	SW846 3050B [4]
Lead	8.3	1.2	0.059	mg/kg	1	11/11/10	11/11/10	RS	SW846 6010C [1]	SW846 3050B [4]
Mercury	0.010 U	0.10	0.010	mg/kg	1	11/18/10	11/18/10	LM	SW846 7471B [3]	SW846 7471B [5]
Selenium [a]	2.4 U	12	2.4	mg/kg	10	11/11/10	11/12/10	RS	SW846 6010C [2]	SW846 3050B [4]
Silver	0.059 U	0.59	0.059	mg/kg	1	11/11/10	11/11/10	RS	SW846 6010C [1]	SW846 3050B [4]

(1) Instrument QC Batch: MA8504
(2) Instrument QC Batch: MA8509
(3) Instrument QC Batch: MA8518
(4) Prep QC Batch: MP19456
(5) Prep QC Batch: MP19500

(a) Elevated reporting limit(s) due to matrix interference.

RL = Reporting Limit
MDL = Method Detection Limit

U = Indicates a result < MDL
B = Indicates a result > = MDL but < RL

Report of Analysis

Client Sample ID:	SS39-TB-11082010-B		
Lab Sample ID:	F77899-21	**Date Sampled:**	11/08/10
Matrix:	SO - Trip Blank Soil	**Date Received:**	11/09/10
Method:	SW846 8260B	**Percent Solids:**	n/a
Project:	Holloman AFB; Alamogordo, NM		

	File ID	DF	Analyzed	By	Prep Date	Prep Batch	Analytical Batch
Run #1	H066022.D	1	11/15/10	MM	n/a	n/a	VH2460
Run #2							

	Initial Weight
Run #1	5.00 g
Run #2	

VOA Special List

CAS No.	Compound	Result	RL	MDL	Units	Q
67-64-1	Acetone	ND	50	20	ug/kg	
75-05-8	Acetonitrile	ND	50	18	ug/kg	
107-02-8	Acrolein	ND	25	11	ug/kg	
107-13-1	Acrylonitrile	ND	25	11	ug/kg	
107-05-1	Allyl chloride	ND	25	5.0	ug/kg	
71-43-2	Benzene	ND	5.0	1.5	ug/kg	
100-44-7	Benzyl Chloride	ND	5.0	1.5	ug/kg	
108-86-1	Bromobenzene	ND	5.0	1.4	ug/kg	
74-97-5	Bromochloromethane	ND	5.0	1.4	ug/kg	
75-27-4	Bromodichloromethane	ND	5.0	1.1	ug/kg	
75-25-2	Bromoform	ND	5.0	1.5	ug/kg	
104-51-8	n-Butylbenzene	ND	5.0	1.3	ug/kg	
135-98-8	sec-Butylbenzene	ND	5.0	1.6	ug/kg	
98-06-6	tert-Butylbenzene	ND	5.0	1.2	ug/kg	
108-90-7	Chlorobenzene	ND	5.0	1.0	ug/kg	
75-00-3	Chloroethane	ND	5.0	2.0	ug/kg	
67-66-3	Chloroform	ND	5.0	1.2	ug/kg	
544-10-5	1-Chlorohexane	ND	5.0	1.4	ug/kg	
95-49-8	o-Chlorotoluene	ND	5.0	1.2	ug/kg	
106-43-4	p-Chlorotoluene	ND	5.0	1.2	ug/kg	
110-75-8	2-Chloroethyl vinyl ether	ND	25	10	ug/kg	
75-15-0	Carbon disulfide	ND	5.0	2.0	ug/kg	
56-23-5	Carbon tetrachloride	ND	5.0	1.8	ug/kg	
75-34-3	1,1-Dichloroethane	ND	5.0	1.1	ug/kg	
75-35-4	1,1-Dichloroethylene	ND	5.0	1.4	ug/kg	
563-58-6	1,1-Dichloropropene	ND	5.0	1.3	ug/kg	
96-12-8	1,2-Dibromo-3-chloropropane	ND	5.0	2.3	ug/kg	
106-93-4	1,2-Dibromoethane	ND	5.0	1.0	ug/kg	
107-06-2	1,2-Dichloroethane	ND	5.0	1.0	ug/kg	
78-87-5	1,2-Dichloropropane	ND	5.0	1.2	ug/kg	
142-28-9	1,3-Dichloropropane	ND	5.0	1.0	ug/kg	
594-20-7	2,2-Dichloropropane	ND	5.0	1.4	ug/kg	

ND = Not detected MDL - Method Detection Limit
RL = Reporting Limit
E = Indicates value exceeds calibration range

J = Indicates an estimated value
B = Indicates analyte found in associated method blank
N = Indicates presumptive evidence of a compound

Report of Analysis

Client Sample ID:	SS39-TB-11082010-B		
Lab Sample ID:	F77899-21	**Date Sampled:**	11/08/10
Matrix:	SO - Trip Blank Soil	**Date Received:**	11/09/10
Method:	SW846 8260B	**Percent Solids:**	n/a
Project:	Holloman AFB; Alamogordo, NM		

VOA Special List

CAS No.	Compound	Result	RL	MDL	Units	Q
124-48-1	Dibromochloromethane	ND	5.0	1.0	ug/kg	
75-71-8	Dichlorodifluoromethane	ND	5.0	1.5	ug/kg	
156-59-2	cis-1,2-Dichloroethylene	ND	5.0	1.5	ug/kg	
10061-01-5	cis-1,3-Dichloropropene	ND	5.0	1.0	ug/kg	
1476-11-5	cis-1,4-Dichloro-2-Butene	ND	25	5.0	ug/kg	
541-73-1	m-Dichlorobenzene	ND	5.0	1.2	ug/kg	
95-50-1	o-Dichlorobenzene	ND	5.0	1.1	ug/kg	
106-46-7	p-Dichlorobenzene	ND	5.0	1.1	ug/kg	
156-60-5	trans-1,2-Dichloroethylene	ND	5.0	1.5	ug/kg	
10061-02-6	trans-1,3-Dichloropropene	ND	5.0	1.1	ug/kg	
100-41-4	Ethylbenzene	ND	5.0	1.0	ug/kg	
97-63-2	Ethyl methacrylate	ND	25	5.0	ug/kg	
76-13-1	Freon 113	ND	5.0	1.7	ug/kg	
591-78-6	2-Hexanone	ND	25	5.4	ug/kg	
87-68-3	Hexachlorobutadiene	ND	5.0	2.0	ug/kg	
110-54-3	Hexane	ND	5.0	1.9	ug/kg	
98-82-8	Isopropylbenzene	ND	5.0	1.1	ug/kg	
99-87-6	p-Isopropyltoluene	ND	5.0	1.2	ug/kg	
108-10-1	4-Methyl-2-pentanone	ND	25	5.5	ug/kg	
126-98-7	Methacrylonitrile	ND	25	9.2	ug/kg	
74-83-9	Methyl bromide	ND	5.0	2.0	ug/kg	
74-87-3	Methyl chloride	ND	5.0	2.0	ug/kg	
74-88-4	Methyl iodide	ND	10	1.1	ug/kg	
80-62-6	Methyl methacrylate	ND	5.0	1.8	ug/kg	
74-95-3	Methylene bromide	ND	5.0	1.5	ug/kg	
75-09-2	Methylene chloride [a]	14.2	10	4.6	ug/kg	
78-93-3	Methyl ethyl ketone	ND	25	6.1	ug/kg	
1634-04-4	Methyl Tert Butyl Ether	ND	5.0	2.0	ug/kg	
91-20-3	Naphthalene	ND	5.0	2.0	ug/kg	
76-01-7	Pentachloroethane	ND	25	5.0	ug/kg	
107-12-0	Propionitrile	ND	50	16	ug/kg	
103-65-1	n-Propylbenzene	ND	5.0	1.4	ug/kg	
100-42-5	Styrene	ND	5.0	2.6	ug/kg	
630-20-6	1,1,1,2-Tetrachloroethane	ND	5.0	1.0	ug/kg	
71-55-6	1,1,1-Trichloroethane	ND	5.0	1.1	ug/kg	
79-34-5	1,1,2,2-Tetrachloroethane	ND	5.0	1.2	ug/kg	
79-00-5	1,1,2-Trichloroethane	ND	5.0	1.1	ug/kg	
87-61-6	1,2,3-Trichlorobenzene	ND	5.0	1.0	ug/kg	
96-18-4	1,2,3-Trichloropropane	ND	5.0	1.7	ug/kg	
120-82-1	1,2,4-Trichlorobenzene	ND	5.0	1.2	ug/kg	

ND = Not detected MDL - Method Detection Limit
RL = Reporting Limit
E = Indicates value exceeds calibration range

J = Indicates an estimated value
B = Indicates analyte found in associated method blank
N = Indicates presumptive evidence of a compound

Report of Analysis

Client Sample ID:	SS39-TB-11082010-B		
Lab Sample ID:	F77899-21	**Date Sampled:**	11/08/10
Matrix:	SO - Trip Blank Soil	**Date Received:**	11/09/10
Method:	SW846 8260B	**Percent Solids:**	n/a
Project:	Holloman AFB; Alamogordo, NM		

VOA Special List

CAS No.	Compound	Result	RL	MDL	Units	Q
95-63-6	1,2,4-Trimethylbenzene	ND	5.0	1.1	ug/kg	
108-67-8	1,3,5-Trimethylbenzene	ND	5.0	1.3	ug/kg	
127-18-4	Tetrachloroethylene	ND	5.0	1.0	ug/kg	
108-88-3	Toluene	ND	5.0	1.2	ug/kg	
79-01-6	Trichloroethylene	ND	5.0	1.2	ug/kg	
75-69-4	Trichlorofluoromethane	ND	5.0	2.0	ug/kg	
110-57-6	Trans-1,4-Dichloro-2-Butene	ND	25	5.0	ug/kg	
75-01-4	Vinyl chloride	ND	5.0	1.5	ug/kg	
108-05-4	Vinyl Acetate	ND	25	14	ug/kg	
	m,p-Xylene	ND	10	2.2	ug/kg	
95-47-6	o-Xylene	ND	5.0	1.0	ug/kg	

CAS No.	Surrogate Recoveries	Run# 1	Run# 2	Limits
1868-53-7	Dibromofluoromethane	121%		80-121%
2037-26-5	Toluene-D8	76%		71-130%
460-00-4	4-Bromofluorobenzene	105%		59-148%
17060-07-0	1,2-Dichloroethane-D4	119%		77-123%

(a) Suspected laboratory contaminant.

ND = Not detected MDL - Method Detection Limit
RL = Reporting Limit
E = Indicates value exceeds calibration range

J = Indicates an estimated value
B = Indicates analyte found in associated method blank
N = Indicates presumptive evidence of a compound

Report of Analysis

Client Sample ID:	SS39-TB-11082010-B		
Lab Sample ID:	F77899-21	**Date Sampled:**	11/08/10
Matrix:	SO - Trip Blank Soil	**Date Received:**	11/09/10
Method:	SW846 8015C	**Percent Solids:**	n/a
Project:	Holloman AFB; Alamogordo, NM		

	File ID	DF	Analyzed	By	Prep Date	Prep Batch	Analytical Batch
Run #1	QR056680.D	1	11/15/10	AH	n/a	n/a	GQR2467
Run #2							

	Initial Weight	Final Volume	Methanol Aliquot
Run #1	5.00 g	5.0 ml	100 ul
Run #2			

CAS No.	Compound	Result	RL	MDL	Units	Q
	TPH-GRO (C6-C10)	ND	5.0	2.5	mg/kg	

CAS No.	Surrogate Recoveries	Run# 1	Run# 2	Limits
460-00-4	4-Bromofluorobenzene	92%		56-136%
98-08-8	aaa-Trifluorotoluene	86%		61-121%

ND = Not detected MDL - Method Detection Limit
RL = Reporting Limit
E = Indicates value exceeds calibration range

J = Indicates an estimated value
B = Indicates analyte found in associated method blank
N = Indicates presumptive evidence of a compound

Report of Analysis

Client Sample ID:	SS39-TB-11082010-C		
Lab Sample ID:	F77899-22	**Date Sampled:**	11/08/10
Matrix:	SO - Trip Blank Soil	**Date Received:**	11/09/10
Method:	SW846 8260B	**Percent Solids:**	n/a
Project:	Holloman AFB; Alamogordo, NM		

	File ID	DF	Analyzed	By	Prep Date	Prep Batch	Analytical Batch
Run #1	H066023.D	1	11/15/10	MM	n/a	n/a	VH2460
Run #2							

	Initial Weight
Run #1	5.00 g
Run #2	

VOA Special List

CAS No.	Compound	Result	RL	MDL	Units	Q
67-64-1	Acetone	ND	50	20	ug/kg	
75-05-8	Acetonitrile	ND	50	18	ug/kg	
107-02-8	Acrolein	ND	25	11	ug/kg	
107-13-1	Acrylonitrile	ND	25	11	ug/kg	
107-05-1	Allyl chloride	ND	25	5.0	ug/kg	
71-43-2	Benzene	ND	5.0	1.5	ug/kg	
100-44-7	Benzyl Chloride	ND	5.0	1.5	ug/kg	
108-86-1	Bromobenzene	ND	5.0	1.4	ug/kg	
74-97-5	Bromochloromethane	ND	5.0	1.4	ug/kg	
75-27-4	Bromodichloromethane	ND	5.0	1.1	ug/kg	
75-25-2	Bromoform	ND	5.0	1.5	ug/kg	
104-51-8	n-Butylbenzene	ND	5.0	1.3	ug/kg	
135-98-8	sec-Butylbenzene	ND	5.0	1.6	ug/kg	
98-06-6	tert-Butylbenzene	ND	5.0	1.2	ug/kg	
108-90-7	Chlorobenzene	ND	5.0	1.0	ug/kg	
75-00-3	Chloroethane	ND	5.0	2.0	ug/kg	
67-66-3	Chloroform	ND	5.0	1.2	ug/kg	
544-10-5	1-Chlorohexane	ND	5.0	1.4	ug/kg	
95-49-8	o-Chlorotoluene	ND	5.0	1.2	ug/kg	
106-43-4	p-Chlorotoluene	ND	5.0	1.2	ug/kg	
110-75-8	2-Chloroethyl vinyl ether	ND	25	10	ug/kg	
75-15-0	Carbon disulfide	ND	5.0	2.0	ug/kg	
56-23-5	Carbon tetrachloride	ND	5.0	1.8	ug/kg	
75-34-3	1,1-Dichloroethane	ND	5.0	1.1	ug/kg	
75-35-4	1,1-Dichloroethylene	ND	5.0	1.4	ug/kg	
563-58-6	1,1-Dichloropropene	ND	5.0	1.3	ug/kg	
96-12-8	1,2-Dibromo-3-chloropropane	ND	5.0	2.3	ug/kg	
106-93-4	1,2-Dibromoethane	ND	5.0	1.0	ug/kg	
107-06-2	1,2-Dichloroethane	ND	5.0	1.0	ug/kg	
78-87-5	1,2-Dichloropropane	ND	5.0	1.2	ug/kg	
142-28-9	1,3-Dichloropropane	ND	5.0	1.0	ug/kg	
594-20-7	2,2-Dichloropropane	ND	5.0	1.4	ug/kg	

ND = Not detected MDL - Method Detection Limit
RL = Reporting Limit
E = Indicates value exceeds calibration range

J = Indicates an estimated value
B = Indicates analyte found in associated method blank
N = Indicates presumptive evidence of a compound

Report of Analysis

Client Sample ID:	SS39-TB-11082010-C		
Lab Sample ID:	F77899-22	**Date Sampled:**	11/08/10
Matrix:	SO - Trip Blank Soil	**Date Received:**	11/09/10
Method:	SW846 8260B	**Percent Solids:**	n/a
Project:	Holloman AFB; Alamogordo, NM		

VOA Special List

CAS No.	Compound	Result	RL	MDL	Units	Q
124-48-1	Dibromochloromethane	ND	5.0	1.0	ug/kg	
75-71-8	Dichlorodifluoromethane	ND	5.0	1.5	ug/kg	
156-59-2	cis-1,2-Dichloroethylene	ND	5.0	1.5	ug/kg	
10061-01-5	cis-1,3-Dichloropropene	ND	5.0	1.0	ug/kg	
1476-11-5	cis-1,4-Dichloro-2-Butene	ND	25	5.0	ug/kg	
541-73-1	m-Dichlorobenzene	ND	5.0	1.2	ug/kg	
95-50-1	o-Dichlorobenzene	ND	5.0	1.1	ug/kg	
106-46-7	p-Dichlorobenzene	ND	5.0	1.1	ug/kg	
156-60-5	trans-1,2-Dichloroethylene	ND	5.0	1.5	ug/kg	
10061-02-6	trans-1,3-Dichloropropene	ND	5.0	1.1	ug/kg	
100-41-4	Ethylbenzene	ND	5.0	1.0	ug/kg	
97-63-2	Ethyl methacrylate	ND	25	5.0	ug/kg	
76-13-1	Freon 113	ND	5.0	1.7	ug/kg	
591-78-6	2-Hexanone	ND	25	5.4	ug/kg	
87-68-3	Hexachlorobutadiene	ND	5.0	2.0	ug/kg	
110-54-3	Hexane	ND	5.0	1.9	ug/kg	
98-82-8	Isopropylbenzene	ND	5.0	1.1	ug/kg	
99-87-6	p-Isopropyltoluene	ND	5.0	1.2	ug/kg	
108-10-1	4-Methyl-2-pentanone	ND	25	5.5	ug/kg	
126-98-7	Methacrylonitrile	ND	25	9.2	ug/kg	
74-83-9	Methyl bromide	ND	5.0	2.0	ug/kg	
74-87-3	Methyl chloride	ND	5.0	2.0	ug/kg	
74-88-4	Methyl iodide	ND	10	1.1	ug/kg	
80-62-6	Methyl methacrylate	ND	5.0	1.8	ug/kg	
74-95-3	Methylene bromide	ND	5.0	1.5	ug/kg	
75-09-2	Methylene chloride [a]	9.1	10	4.6	ug/kg	J
78-93-3	Methyl ethyl ketone	ND	25	6.1	ug/kg	
1634-04-4	Methyl Tert Butyl Ether	ND	5.0	2.0	ug/kg	
91-20-3	Naphthalene	ND	5.0	2.0	ug/kg	
76-01-7	Pentachloroethane	ND	25	5.0	ug/kg	
107-12-0	Propionitrile	ND	50	16	ug/kg	
103-65-1	n-Propylbenzene	ND	5.0	1.4	ug/kg	
100-42-5	Styrene	ND	5.0	2.6	ug/kg	
630-20-6	1,1,1,2-Tetrachloroethane	ND	5.0	1.0	ug/kg	
71-55-6	1,1,1-Trichloroethane	ND	5.0	1.1	ug/kg	
79-34-5	1,1,2,2-Tetrachloroethane	ND	5.0	1.2	ug/kg	
79-00-5	1,1,2-Trichloroethane	ND	5.0	1.1	ug/kg	
87-61-6	1,2,3-Trichlorobenzene	ND	5.0	1.0	ug/kg	
96-18-4	1,2,3-Trichloropropane	ND	5.0	1.7	ug/kg	
120-82-1	1,2,4-Trichlorobenzene	ND	5.0	1.2	ug/kg	

ND = Not detected MDL - Method Detection Limit
RL = Reporting Limit
E = Indicates value exceeds calibration range

J = Indicates an estimated value
B = Indicates analyte found in associated method blank
N = Indicates presumptive evidence of a compound

Report of Analysis

Client Sample ID:	SS39-TB-11082010-C		
Lab Sample ID:	F77899-22	**Date Sampled:**	11/08/10
Matrix:	SO - Trip Blank Soil	**Date Received:**	11/09/10
Method:	SW846 8260B	**Percent Solids:**	n/a
Project:	Holloman AFB; Alamogordo, NM		

VOA Special List

CAS No.	Compound	Result	RL	MDL	Units	Q
95-63-6	1,2,4-Trimethylbenzene	ND	5.0	1.1	ug/kg	
108-67-8	1,3,5-Trimethylbenzene	ND	5.0	1.3	ug/kg	
127-18-4	Tetrachloroethylene	ND	5.0	1.0	ug/kg	
108-88-3	Toluene	ND	5.0	1.2	ug/kg	
79-01-6	Trichloroethylene	ND	5.0	1.2	ug/kg	
75-69-4	Trichlorofluoromethane	ND	5.0	2.0	ug/kg	
110-57-6	Trans-1,4-Dichloro-2-Butene	ND	25	5.0	ug/kg	
75-01-4	Vinyl chloride	ND	5.0	1.5	ug/kg	
108-05-4	Vinyl Acetate	ND	25	14	ug/kg	
	m,p-Xylene	ND	10	2.2	ug/kg	
95-47-6	o-Xylene	ND	5.0	1.0	ug/kg	

CAS No.	Surrogate Recoveries	Run# 1	Run# 2	Limits
1868-53-7	Dibromofluoromethane	116%		80-121%
2037-26-5	Toluene-D8	76%		71-130%
460-00-4	4-Bromofluorobenzene	102%		59-148%
17060-07-0	1,2-Dichloroethane-D4	115%		77-123%

(a) Suspected laboratory contaminant.

ND = Not detected MDL - Method Detection Limit
RL = Reporting Limit
E = Indicates value exceeds calibration range

J = Indicates an estimated value
B = Indicates analyte found in associated method blank
N = Indicates presumptive evidence of a compound

Report of Analysis

Client Sample ID:	SS39-TB-11082010-C		
Lab Sample ID:	F77899-22	**Date Sampled:**	11/08/10
Matrix:	SO - Trip Blank Soil	**Date Received:**	11/09/10
Method:	SW846 8015C	**Percent Solids:**	n/a
Project:	Holloman AFB; Alamogordo, NM		

	File ID	DF	Analyzed	By	Prep Date	Prep Batch	Analytical Batch
Run #1	QR056681.D	1	11/15/10	AH	n/a	n/a	GQR2467
Run #2							

	Initial Weight	Final Volume	Methanol Aliquot
Run #1	5.00 g	5.0 ml	100 ul
Run #2			

CAS No.	Compound	Result	RL	MDL	Units	Q
	TPH-GRO (C6-C10)	ND	5.0	2.5	mg/kg	

CAS No.	Surrogate Recoveries	Run# 1	Run# 2	Limits
460-00-4	4-Bromofluorobenzene	89%		56-136%
98-08-8	aaa-Trifluorotoluene	83%		61-121%

ND = Not detected MDL - Method Detection Limit
RL = Reporting Limit
E = Indicates value exceeds calibration range

J = Indicates an estimated value
B = Indicates analyte found in associated method blank
N = Indicates presumptive evidence of a compound

Southeast ACCUTEST LABORATORIES

Misc. Forms

Custody Documents and Other Forms

Includes the following where applicable:

- Certification Exceptions
- Chain of Custody

Tetra Tech, Inc.
800 Oak Ridge Turnpike, Ste A-500
Oak Ridge, TN 37830
865/283-9900

CHAIN-OF-CUSTODY

F77899

Laboratory Name: **Accutest Laboratories** Address: **4405 Vineland Rd. Suite C-15 Orlando, FL 32811** Contact: **Sue Bell (813/741-3338)**

Project Name Holloman AFB, SS39 | Project Location **Holloman AFB, New Mexico**

Project No. **100-TEN-T93002-1** | Project Contact **Maureen McMyler** | Site Telephone No. **865-621-8754**

Report to: Maureen McMyler 800 Oak Ridge Turnpike 865/535-2030

Bill to: Sheila Hall, 800 Oak Ridge Turnpike 865/283-9900

Project Manager/Supervisor **Mike Higgins**

Analysis and Method Desired

Item No.	Sample Number	Date	Time	Comp	Grab	Matrix	Sample Description, Location	Number of Containers	VOCs by SW8260B	TPH-GRO by SW8015B	TPH-DRO by 8015BModified	RCRA Metals by SW6010B/ SW7471A		Notes
1	SS39-DPT-01A	11/8/2010	1320		X	SO	SS39-DPT-01, Depth 1	5	X	X	X			Drainage Swale
2	SS39-DPT-01B	11/8/2010	1330		X	SO	SS39-DPT-01, Depth 3	5	X	X	X			Drainage Swale
3	SS39-DPT-01C	11/8/2010	1345		X	SO	SS39-DPT-01, Depth 7	5	X	X	X			Drainage Swale
4	SS39-DPT-02A	11/8/2010	1215		X	SO	SS39-DPT-02, Depth 1	5	X	X	X			Drainage Swale
5	SS39-DPT-02B	11/8/2010	1215		X	SO	SS39-DPT-02, Depth 3	5	X	X	X			Drainage Swale
6	SS39-DPT-02C	11/8/2010	1305		X	SO	SS39-DPT-02, Depth 7	5	X	X	X			Drainage Swale
7	SS39-DPT-03A	11/8/2010	1140		X	SO	SS39-DPT-03, Depth 1	5	X	X	X			Drainage Swale
8	SS39-DPT-03B	11/8/2010	1145		X	SO	SS39-DPT-03, Depth 3	5	X	X	X			Drainage Swale
9	SS39-DPT-03C	11/8/2010	1150		X	SO	SS39-DPT-03, Depth 7	5	X	X	X			Drainage Swale
10	SS39-DPT-04A	11/8/2010	1100		X	SO	SS39-DPT-04, Depth 1	5	X	X	X			Drainage Swale
11	SS39-DPT-04B	11/8/2010	1110		X	SO	SS39-DPT-04, Depth 3	5	X	X	X			Drainage Swale
12	SS39-DPT-04C	11/8/2010	1125		X	SO	SS39-DPT-04, Depth 7	5	X	X	X			Drainage Swale
13	SS39-DPT-15A	11/8/2010	920		X	SO	SS39-DPT-15, Depth 4	6	X	X	X	X		Outside Drainage Sump Cluster 1
14	SS39-DPT-15B	11/8/2010	935		X	SO	SS39-DPT-15, Depth 8	6	X	X	X	X		Outside Drainage Sump Cluster 1
15	SS39-DPT-15C	11/8/2010	950		X	SO	SS39-DPT-15, Depth 11	6	X	X	X	X		Outside Drainage Sump Cluster 1
16	SS39-DPT-16A	11/8/2010	1015		X	SO	SS39-DPT-16, Depth 4	6	X	X	X	X		Outside Drainage Sump Cluster 1
17	SS39-DPT-16B	11/8/2010	1020		X	SO	SS39-DPT-16, Depth 8	6	X	X	X	X		Outside Drainage Sump Cluster 1
18	SS39-DPT-16C	11/8/2010	1030		X	SO	SS39-DPT-16, Depth 11	6	X	X	X	X		Outside Drainage Sump Cluster 1
19	SS39-DPT-DUP04	11/8/2010	1150		X	SO	SS39-DPT-03C	5	X	X	X	X		DUP
20	SS39-DPT-DUP05	11/8/2010	1320		X	SO	SS39-DPT-01A	5	X	X	X	X		DUP
21	SS39-DPT-MS-01C	11/8/2010	1345		X	SO	SS39-DPT-01C	5	X	X	X	X		MS
22	SS39-DPT-MSD-01C	11/8/2010	1345		X	SO	SS39-DPT-01C	5	X	X	X	X		MSD
23	SS39-TB-11082010-B	11/8/2010	1515		X	WQ	Trip Blank	3	X	X				
24	SS30-TB-11082010-C	11/8/2010	1515		X	WQ	Trip Blank	3	X	X				

28
36

Transfers Relinquished By (Signature)	Date/Time	Transfers Accepted By (Signature)	Date/Time
[signature] FX	11/8/10 1530	[signature] FX	
		[signature] Accutest	11/9/10 0700

Special Instructions:

FedEx Airbill No.:

Laboratory

Sampler's Signature [signature]

TAT: ____ Standard ____ Rush Due: _____ Seals Intact? ____ Y ____ N Received Good Condition ____ Y ____ N ____ Cold

F77899: Chain of Custody
Page 1 of 2

ACCUTEST LABORATORIES SAMPLE RECEIPT CONFIRMATION

ACCUTEST'S JOB NUMBER: F77899 CLIENT: TetraTech PROJECT: Holloman AFB

DATE/TIME RECEIVED: 110910 09:00 {MM/DD/YY 24:00} NUMBER OF COOLERS RECEIVED: 2

METHOD OF DELIVERY: FEDEX UPS ACCUTEST COURIER GREYHOUND DELIVERY OTHER

AIRBILL NUMBERS: 8731 0942 6410

COOLER INFORMATION

- [ ] CUSTODY SEAL NOT PRESENT OR NOT INTACT
- [ ] CHAIN OF CUSTODY NOT RECEIVED (COC)
- [ ] ANALYSIS REQUESTED IS UNCLEAR OR MISSING
- [ ] SAMPLE DATES OR TIMES UNCLEAR OR MISSING
- [ ] TEMPERATURE CRITERIA NOT MET
- [ ] WET ICE PRESENT

TRIP BLANK INFORMATION

- [x] TRIP BLANK PROVIDED
- [ ] TRIP BLANK NOT PROVIDED
- [ ] TRIP BLANK NOT ON COC
- [x] TRIP BLANK INTACT
- [ ] TRIP BLANK NOT INTACT
- [ ] RECEIVED WATER TRIP BLANK
- [x] RECEIVED SOIL TRIP BLANK (2)

MISC. INFORMATION

NUMBER OF ENCORES ? Ø

NUMBER OF 5035 FIELD KITS ? 22 + 2TB

NUMBER OR LAB FILTERED METALS ? Ø

TEMPERATURE INFORMATION

- [ ] IR THERM ID 1 CORR. FACTOR -.2
- [ ] OBSERVED TEMPS: 3.0 3.8
- [ ] CORRECTED TEMPS: 2.8 3.6

SAMPLE INFORMATION

- [ ] SAMPLE LABELS PRESENT ON ALL BOTTLES
- [ ] INCORRECT NUMBER OF CONTAINERS USED
- [ ] SAMPLE RECEIVED IMPROPERLY PRESERVED
- [ ] INSUFFICIENT VOLUME FOR ANALYSIS
- [ ] DATES/TIMES ON COC DO NOT MATCH SAMPLE LABEL
- [ ] ID'S ON COC DO NOT MATCH LABEL
- [ ] VOC VIALS HAVE HEADSPACE (MACRO BUBBLES)
- [ ] BOTTLES RECEIVED BUT ANALYSIS NOT REQUESTED
- [ ] NO BOTTLES RECEIVED FOR ANALYSIS REQUESTED
- [ ] UNCLEAR FILTERING OR COMPOSITING INSTRUCTIONS
- [ ] SAMPLE CONTAINER(S) RECEIVED BROKEN
- [ ] % SOLIDS JAR NOT RECEIVED
- [ ] 5035 FIELD KIT FROZEN WITHIN 48 HOUR'S
- [ ] RESIDUAL CHLORINE PRESENT

{APPICABLE TO EPA 600 SERIES OR NORTH CAROLINA ORGANICS}

SUMMARY OF COMMENTS:

TECHNICIAN SIGNATURE/DATE E.T. 11.09.10 REVIEWER SIGNATURE/DATE 11-9-10

NF 10/09 RECEIPT CONFIRMATION 100609 (2).xls

4.1

4

F77899: Chain of Custody

Page 2 of 2

Southeast ACCUTEST LABORATORIES

GC/MS Volatiles

QC Data Summaries

Includes the following where applicable:

- Method Blank Summaries
- Blank Spike Summaries
- Matrix Spike and Duplicate Summaries
- Instrument Performance Checks (BFB)
- Internal Standard Area Summaries
- Surrogate Recovery Summaries
- Initial and Continuing Calibration Summaries

Method Blank Summary

Job Number: F77899
Account: TETTNOAK Tetra Tech, Inc
Project: Holloman AFB; Alamogordo, NM

Sample	File ID	DF	Analyzed	By	Prep Date	Prep Batch	Analytical Batch
VG2578-MB	G0068406.D	1	11/15/10	MM	n/a	n/a	VG2578

The QC reported here applies to the following samples: **Method:** SW846 8260B

F77899-2, F77899-3, F77899-4, F77899-5, F77899-6, F77899-7, F77899-8, F77899-9, F77899-10, F77899-11, F77899-12, F77899-13, F77899-14, F77899-15, F77899-16, F77899-17, F77899-18, F77899-19

CAS No.	Compound	Result	RL	MDL	Units	Q
67-64-1	Acetone	ND	50	20	ug/kg	
75-05-8	Acetonitrile	ND	50	18	ug/kg	
107-02-8	Acrolein	ND	25	11	ug/kg	
107-13-1	Acrylonitrile	ND	25	11	ug/kg	
107-05-1	Allyl chloride	ND	25	5.0	ug/kg	
71-43-2	Benzene	ND	5.0	1.5	ug/kg	
100-44-7	Benzyl Chloride	ND	5.0	1.5	ug/kg	
108-86-1	Bromobenzene	ND	5.0	1.4	ug/kg	
74-97-5	Bromochloromethane	ND	5.0	1.4	ug/kg	
75-27-4	Bromodichloromethane	ND	5.0	1.1	ug/kg	
75-25-2	Bromoform	ND	5.0	1.5	ug/kg	
104-51-8	n-Butylbenzene	ND	5.0	1.3	ug/kg	
135-98-8	sec-Butylbenzene	ND	5.0	1.6	ug/kg	
98-06-6	tert-Butylbenzene	ND	5.0	1.2	ug/kg	
108-90-7	Chlorobenzene	ND	5.0	1.0	ug/kg	
75-00-3	Chloroethane	ND	5.0	2.0	ug/kg	
67-66-3	Chloroform	ND	5.0	1.2	ug/kg	
544-10-5	1-Chlorohexane	ND	5.0	1.4	ug/kg	
95-49-8	o-Chlorotoluene	ND	5.0	1.2	ug/kg	
106-43-4	p-Chlorotoluene	ND	5.0	1.2	ug/kg	
110-75-8	2-Chloroethyl vinyl ether	ND	25	10	ug/kg	
75-15-0	Carbon disulfide	ND	5.0	2.0	ug/kg	
56-23-5	Carbon tetrachloride	ND	5.0	1.8	ug/kg	
75-34-3	1,1-Dichloroethane	ND	5.0	1.1	ug/kg	
75-35-4	1,1-Dichloroethylene	ND	5.0	1.4	ug/kg	
563-58-6	1,1-Dichloropropene	ND	5.0	1.3	ug/kg	
96-12-8	1,2-Dibromo-3-chloropropane	ND	5.0	2.3	ug/kg	
106-93-4	1,2-Dibromoethane	ND	5.0	1.0	ug/kg	
107-06-2	1,2-Dichloroethane	ND	5.0	1.0	ug/kg	
78-87-5	1,2-Dichloropropane	ND	5.0	1.2	ug/kg	
142-28-9	1,3-Dichloropropane	ND	5.0	1.0	ug/kg	
594-20-7	2,2-Dichloropropane	ND	5.0	1.4	ug/kg	
124-48-1	Dibromochloromethane	ND	5.0	1.0	ug/kg	
75-71-8	Dichlorodifluoromethane	ND	5.0	1.5	ug/kg	
156-59-2	cis-1,2-Dichloroethylene	ND	5.0	1.5	ug/kg	
10061-01-5	cis-1,3-Dichloropropene	ND	5.0	1.0	ug/kg	

Method Blank Summary

Job Number: F77899
Account: TETTNOAK Tetra Tech, Inc
Project: Holloman AFB; Alamogordo, NM

Sample	File ID	DF	Analyzed	By	Prep Date	Prep Batch	Analytical Batch
VG2578-MB	G0068406.D	1	11/15/10	MM	n/a	n/a	VG2578

The QC reported here applies to the following samples: **Method:** SW846 8260B

F77899-2, F77899-3, F77899-4, F77899-5, F77899-6, F77899-7, F77899-8, F77899-9, F77899-10, F77899-11, F77899-12, F77899-13, F77899-14, F77899-15, F77899-16, F77899-17, F77899-18, F77899-19

CAS No.	Compound	Result	RL	MDL	Units	Q
1476-11-5	cis-1,4-Dichloro-2-Butene	ND	25	5.0	ug/kg	
541-73-1	m-Dichlorobenzene	ND	5.0	1.2	ug/kg	
95-50-1	o-Dichlorobenzene	ND	5.0	1.1	ug/kg	
106-46-7	p-Dichlorobenzene	ND	5.0	1.1	ug/kg	
156-60-5	trans-1,2-Dichloroethylene	ND	5.0	1.5	ug/kg	
10061-02-6	trans-1,3-Dichloropropene	ND	5.0	1.1	ug/kg	
100-41-4	Ethylbenzene	ND	5.0	1.0	ug/kg	
97-63-2	Ethyl methacrylate	ND	25	5.0	ug/kg	
76-13-1	Freon 113	ND	5.0	1.7	ug/kg	
591-78-6	2-Hexanone	ND	25	5.4	ug/kg	
87-68-3	Hexachlorobutadiene	ND	5.0	2.0	ug/kg	
110-54-3	Hexane	ND	5.0	1.9	ug/kg	
98-82-8	Isopropylbenzene	ND	5.0	1.1	ug/kg	
99-87-6	p-Isopropyltoluene	ND	5.0	1.2	ug/kg	
108-10-1	4-Methyl-2-pentanone	ND	25	5.5	ug/kg	
126-98-7	Methacrylonitrile	ND	25	9.2	ug/kg	
74-83-9	Methyl bromide	ND	5.0	2.0	ug/kg	
74-87-3	Methyl chloride	ND	5.0	2.0	ug/kg	
74-88-4	Methyl iodide	ND	10	1.1	ug/kg	
80-62-6	Methyl methacrylate	ND	5.0	1.8	ug/kg	
74-95-3	Methylene bromide	ND	5.0	1.5	ug/kg	
75-09-2	Methylene chloride	ND	10	4.6	ug/kg	
78-93-3	Methyl ethyl ketone	ND	25	6.1	ug/kg	
1634-04-4	Methyl Tert Butyl Ether	ND	5.0	2.0	ug/kg	
91-20-3	Naphthalene	ND	5.0	2.0	ug/kg	
76-01-7	Pentachloroethane	ND	25	5.0	ug/kg	
107-12-0	Propionitrile	ND	50	16	ug/kg	
103-65-1	n-Propylbenzene	ND	5.0	1.4	ug/kg	
100-42-5	Styrene	ND	5.0	2.6	ug/kg	
630-20-6	1,1,1,2-Tetrachloroethane	ND	5.0	1.0	ug/kg	
71-55-6	1,1,1-Trichloroethane	ND	5.0	1.1	ug/kg	
79-34-5	1,1,2,2-Tetrachloroethane	ND	5.0	1.2	ug/kg	
79-00-5	1,1,2-Trichloroethane	ND	5.0	1.1	ug/kg	
87-61-6	1,2,3-Trichlorobenzene	ND	5.0	1.0	ug/kg	
96-18-4	1,2,3-Trichloropropane	ND	5.0	1.7	ug/kg	
120-82-1	1,2,4-Trichlorobenzene	ND	5.0	1.2	ug/kg	

Method Blank Summary

Job Number: F77899
Account: TETTNOAK Tetra Tech, Inc
Project: Holloman AFB; Alamogordo, NM

Sample	File ID	DF	Analyzed	By	Prep Date	Prep Batch	Analytical Batch
VG2578-MB	G0068406.D	1	11/15/10	MM	n/a	n/a	VG2578

The QC reported here applies to the following samples: **Method:** SW846 8260B

F77899-2, F77899-3, F77899-4, F77899-5, F77899-6, F77899-7, F77899-8, F77899-9, F77899-10, F77899-11, F77899-12, F77899-13, F77899-14, F77899-15, F77899-16, F77899-17, F77899-18, F77899-19

CAS No.	Compound	Result	RL	MDL	Units	Q
95-63-6	1,2,4-Trimethylbenzene	ND	5.0	1.1	ug/kg	
108-67-8	1,3,5-Trimethylbenzene	ND	5.0	1.3	ug/kg	
127-18-4	Tetrachloroethylene	ND	5.0	1.0	ug/kg	
108-88-3	Toluene	ND	5.0	1.2	ug/kg	
79-01-6	Trichloroethylene	ND	5.0	1.2	ug/kg	
75-69-4	Trichlorofluoromethane	ND	5.0	2.0	ug/kg	
110-57-6	Trans-1,4-Dichloro-2-Butene	ND	25	5.0	ug/kg	
75-01-4	Vinyl chloride	ND	5.0	1.5	ug/kg	
108-05-4	Vinyl Acetate	ND	25	14	ug/kg	
	m,p-Xylene	ND	10	2.2	ug/kg	
95-47-6	o-Xylene	ND	5.0	1.0	ug/kg	

CAS No.	Surrogate Recoveries		Limits
1868-53-7	Dibromofluoromethane	110%	80-121%
2037-26-5	Toluene-D8	90%	71-130%
460-00-4	4-Bromofluorobenzene	100%	59-148%
17060-07-0	1,2-Dichloroethane-D4	106%	77-123%

Method Blank Summary

Job Number: F77899
Account: TETTNOAK Tetra Tech, Inc
Project: Holloman AFB; Alamogordo, NM

Sample	File ID	DF	Analyzed	By	Prep Date	Prep Batch	Analytical Batch
VH2460-MB	H066009.D	1	11/15/10	MM	n/a	n/a	VH2460

The QC reported here applies to the following samples: **Method:** SW846 8260B

F77899-21, F77899-22

CAS No.	Compound	Result	RL	MDL	Units	Q
67-64-1	Acetone	ND	50	20	ug/kg	
75-05-8	Acetonitrile	ND	50	18	ug/kg	
107-02-8	Acrolein	ND	25	11	ug/kg	
107-13-1	Acrylonitrile	ND	25	11	ug/kg	
107-05-1	Allyl chloride	ND	25	5.0	ug/kg	
71-43-2	Benzene	ND	5.0	1.5	ug/kg	
100-44-7	Benzyl Chloride	ND	5.0	1.5	ug/kg	
108-86-1	Bromobenzene	ND	5.0	1.4	ug/kg	
74-97-5	Bromochloromethane	ND	5.0	1.4	ug/kg	
75-27-4	Bromodichloromethane	ND	5.0	1.1	ug/kg	
75-25-2	Bromoform	ND	5.0	1.5	ug/kg	
104-51-8	n-Butylbenzene	ND	5.0	1.3	ug/kg	
135-98-8	sec-Butylbenzene	ND	5.0	1.6	ug/kg	
98-06-6	tert-Butylbenzene	ND	5.0	1.2	ug/kg	
108-90-7	Chlorobenzene	ND	5.0	1.0	ug/kg	
75-00-3	Chloroethane	ND	5.0	2.0	ug/kg	
67-66-3	Chloroform	ND	5.0	1.2	ug/kg	
544-10-5	1-Chlorohexane	ND	5.0	1.4	ug/kg	
95-49-8	o-Chlorotoluene	ND	5.0	1.2	ug/kg	
106-43-4	p-Chlorotoluene	ND	5.0	1.2	ug/kg	
110-75-8	2-Chloroethyl vinyl ether	ND	25	10	ug/kg	
75-15-0	Carbon disulfide	ND	5.0	2.0	ug/kg	
56-23-5	Carbon tetrachloride	ND	5.0	1.8	ug/kg	
75-34-3	1,1-Dichloroethane	ND	5.0	1.1	ug/kg	
75-35-4	1,1-Dichloroethylene	ND	5.0	1.4	ug/kg	
563-58-6	1,1-Dichloropropene	ND	5.0	1.3	ug/kg	
96-12-8	1,2-Dibromo-3-chloropropane	ND	5.0	2.3	ug/kg	
106-93-4	1,2-Dibromoethane	ND	5.0	1.0	ug/kg	
107-06-2	1,2-Dichloroethane	ND	5.0	1.0	ug/kg	
78-87-5	1,2-Dichloropropane	ND	5.0	1.2	ug/kg	
142-28-9	1,3-Dichloropropane	ND	5.0	1.0	ug/kg	
594-20-7	2,2-Dichloropropane	ND	5.0	1.4	ug/kg	
124-48-1	Dibromochloromethane	ND	5.0	1.0	ug/kg	
75-71-8	Dichlorodifluoromethane	ND	5.0	1.5	ug/kg	
156-59-2	cis-1,2-Dichloroethylene	ND	5.0	1.5	ug/kg	
10061-01-5	cis-1,3-Dichloropropene	ND	5.0	1.0	ug/kg	

Method Blank Summary

Job Number: F77899
Account: TETTNOAK Tetra Tech, Inc
Project: Holloman AFB; Alamogordo, NM

Sample	File ID	DF	Analyzed	By	Prep Date	Prep Batch	Analytical Batch
VH2460-MB	H066009.D	1	11/15/10	MM	n/a	n/a	VH2460

The QC reported here applies to the following samples: **Method:** SW846 8260B

F77899-21, F77899-22

CAS No.	Compound	Result	RL	MDL	Units	Q
1476-11-5	cis-1,4-Dichloro-2-Butene	ND	25	5.0	ug/kg	
541-73-1	m-Dichlorobenzene	ND	5.0	1.2	ug/kg	
95-50-1	o-Dichlorobenzene	ND	5.0	1.1	ug/kg	
106-46-7	p-Dichlorobenzene	ND	5.0	1.1	ug/kg	
156-60-5	trans-1,2-Dichloroethylene	ND	5.0	1.5	ug/kg	
10061-02-6	trans-1,3-Dichloropropene	ND	5.0	1.1	ug/kg	
100-41-4	Ethylbenzene	ND	5.0	1.0	ug/kg	
97-63-2	Ethyl methacrylate	ND	25	5.0	ug/kg	
76-13-1	Freon 113	ND	5.0	1.7	ug/kg	
591-78-6	2-Hexanone	ND	25	5.4	ug/kg	
87-68-3	Hexachlorobutadiene	ND	5.0	2.0	ug/kg	
110-54-3	Hexane	ND	5.0	1.9	ug/kg	
98-82-8	Isopropylbenzene	ND	5.0	1.1	ug/kg	
99-87-6	p-Isopropyltoluene	ND	5.0	1.2	ug/kg	
108-10-1	4-Methyl-2-pentanone	ND	25	5.5	ug/kg	
126-98-7	Methacrylonitrile	ND	25	9.2	ug/kg	
74-83-9	Methyl bromide	ND	5.0	2.0	ug/kg	
74-87-3	Methyl chloride	ND	5.0	2.0	ug/kg	
74-88-4	Methyl iodide	ND	10	1.1	ug/kg	
80-62-6	Methyl methacrylate	ND	5.0	1.8	ug/kg	
74-95-3	Methylene bromide	ND	5.0	1.5	ug/kg	
75-09-2	Methylene chloride	ND	10	4.6	ug/kg	
78-93-3	Methyl ethyl ketone	ND	25	6.1	ug/kg	
1634-04-4	Methyl Tert Butyl Ether	ND	5.0	2.0	ug/kg	
91-20-3	Naphthalene	ND	5.0	2.0	ug/kg	
76-01-7	Pentachloroethane	ND	25	5.0	ug/kg	
107-12-0	Propionitrile	ND	50	16	ug/kg	
103-65-1	n-Propylbenzene	ND	5.0	1.4	ug/kg	
100-42-5	Styrene	ND	5.0	2.6	ug/kg	
630-20-6	1,1,1,2-Tetrachloroethane	ND	5.0	1.0	ug/kg	
71-55-6	1,1,1-Trichloroethane	ND	5.0	1.1	ug/kg	
79-34-5	1,1,2,2-Tetrachloroethane	ND	5.0	1.2	ug/kg	
79-00-5	1,1,2-Trichloroethane	ND	5.0	1.1	ug/kg	
87-61-6	1,2,3-Trichlorobenzene	1.1	5.0	1.0	ug/kg	J
96-18-4	1,2,3-Trichloropropane	ND	5.0	1.7	ug/kg	
120-82-1	1,2,4-Trichlorobenzene	ND	5.0	1.2	ug/kg	

Method Blank Summary

Job Number: F77899
Account: TETTNOAK Tetra Tech, Inc
Project: Holloman AFB; Alamogordo, NM

Sample	File ID	DF	Analyzed	By	Prep Date	Prep Batch	Analytical Batch
VH2460-MB	H066009.D	1	11/15/10	MM	n/a	n/a	VH2460

The QC reported here applies to the following samples: **Method:** SW846 8260B

F77899-21, F77899-22

CAS No.	Compound	Result	RL	MDL	Units	Q
95-63-6	1,2,4-Trimethylbenzene	ND	5.0	1.1	ug/kg	
108-67-8	1,3,5-Trimethylbenzene	ND	5.0	1.3	ug/kg	
127-18-4	Tetrachloroethylene	ND	5.0	1.0	ug/kg	
108-88-3	Toluene	ND	5.0	1.2	ug/kg	
79-01-6	Trichloroethylene	ND	5.0	1.2	ug/kg	
75-69-4	Trichlorofluoromethane	ND	5.0	2.0	ug/kg	
110-57-6	Trans-1,4-Dichloro-2-Butene	ND	25	5.0	ug/kg	
75-01-4	Vinyl chloride	ND	5.0	1.5	ug/kg	
108-05-4	Vinyl Acetate	ND	25	14	ug/kg	
	m,p-Xylene	ND	10	2.2	ug/kg	
95-47-6	o-Xylene	ND	5.0	1.0	ug/kg	

CAS No.	Surrogate Recoveries		Limits
1868-53-7	Dibromofluoromethane	100%	80-121%
2037-26-5	Toluene-D8	82%	71-130%
460-00-4	4-Bromofluorobenzene	94%	59-148%
17060-07-0	1,2-Dichloroethane-D4	98%	77-123%

Method Blank Summary

Job Number: F77899
Account: TETTNOAK Tetra Tech, Inc
Project: Holloman AFB; Alamogordo, NM

Sample	File ID	DF	Analyzed	By	Prep Date	Prep Batch	Analytical Batch
VH2461-MB	H066053.D	1	11/16/10	MM	n/a	n/a	VH2461

The QC reported here applies to the following samples: **Method:** SW846 8260B

F77899-1, F77899-20

CAS No.	Compound	Result	RL	MDL	Units	Q
67-64-1	Acetone	ND	50	20	ug/kg	
75-05-8	Acetonitrile	ND	50	18	ug/kg	
107-02-8	Acrolein	ND	25	11	ug/kg	
107-13-1	Acrylonitrile	ND	25	11	ug/kg	
107-05-1	Allyl chloride	ND	25	5.0	ug/kg	
71-43-2	Benzene	ND	5.0	1.5	ug/kg	
100-44-7	Benzyl Chloride	ND	5.0	1.5	ug/kg	
108-86-1	Bromobenzene	ND	5.0	1.4	ug/kg	
74-97-5	Bromochloromethane	ND	5.0	1.4	ug/kg	
75-27-4	Bromodichloromethane	ND	5.0	1.1	ug/kg	
75-25-2	Bromoform	ND	5.0	1.5	ug/kg	
104-51-8	n-Butylbenzene	ND	5.0	1.3	ug/kg	
135-98-8	sec-Butylbenzene	ND	5.0	1.6	ug/kg	
98-06-6	tert-Butylbenzene	ND	5.0	1.2	ug/kg	
108-90-7	Chlorobenzene	ND	5.0	1.0	ug/kg	
75-00-3	Chloroethane	ND	5.0	2.0	ug/kg	
67-66-3	Chloroform	ND	5.0	1.2	ug/kg	
544-10-5	1-Chlorohexane	ND	5.0	1.4	ug/kg	
95-49-8	o-Chlorotoluene	ND	5.0	1.2	ug/kg	
106-43-4	p-Chlorotoluene	ND	5.0	1.2	ug/kg	
110-75-8	2-Chloroethyl vinyl ether	ND	25	10	ug/kg	
75-15-0	Carbon disulfide	ND	5.0	2.0	ug/kg	
56-23-5	Carbon tetrachloride	ND	5.0	1.8	ug/kg	
75-34-3	1,1-Dichloroethane	ND	5.0	1.1	ug/kg	
75-35-4	1,1-Dichloroethylene	ND	5.0	1.4	ug/kg	
563-58-6	1,1-Dichloropropene	ND	5.0	1.3	ug/kg	
96-12-8	1,2-Dibromo-3-chloropropane	ND	5.0	2.3	ug/kg	
106-93-4	1,2-Dibromoethane	ND	5.0	1.0	ug/kg	
107-06-2	1,2-Dichloroethane	ND	5.0	1.0	ug/kg	
78-87-5	1,2-Dichloropropane	ND	5.0	1.2	ug/kg	
142-28-9	1,3-Dichloropropane	ND	5.0	1.0	ug/kg	
594-20-7	2,2-Dichloropropane	ND	5.0	1.4	ug/kg	
124-48-1	Dibromochloromethane	ND	5.0	1.0	ug/kg	
75-71-8	Dichlorodifluoromethane	ND	5.0	1.5	ug/kg	
156-59-2	cis-1,2-Dichloroethylene	ND	5.0	1.5	ug/kg	
10061-01-5	cis-1,3-Dichloropropene	ND	5.0	1.0	ug/kg	

Method Blank Summary

Job Number: F77899
Account: TETTNOAK Tetra Tech, Inc
Project: Holloman AFB; Alamogordo, NM

Sample	File ID	DF	Analyzed	By	Prep Date	Prep Batch	Analytical Batch
VH2461-MB	H066053.D	1	11/16/10	MM	n/a	n/a	VH2461

The QC reported here applies to the following samples: **Method:** SW846 8260B

F77899-1, F77899-20

CAS No.	Compound	Result	RL	MDL	Units	Q
1476-11-5	cis-1,4-Dichloro-2-Butene	ND	25	5.0	ug/kg	
541-73-1	m-Dichlorobenzene	ND	5.0	1.2	ug/kg	
95-50-1	o-Dichlorobenzene	ND	5.0	1.1	ug/kg	
106-46-7	p-Dichlorobenzene	ND	5.0	1.1	ug/kg	
156-60-5	trans-1,2-Dichloroethylene	ND	5.0	1.5	ug/kg	
10061-02-6	trans-1,3-Dichloropropene	ND	5.0	1.1	ug/kg	
100-41-4	Ethylbenzene	ND	5.0	1.0	ug/kg	
97-63-2	Ethyl methacrylate	ND	25	5.0	ug/kg	
76-13-1	Freon 113	ND	5.0	1.7	ug/kg	
591-78-6	2-Hexanone	ND	25	5.4	ug/kg	
87-68-3	Hexachlorobutadiene	ND	5.0	2.0	ug/kg	
110-54-3	Hexane	ND	5.0	1.9	ug/kg	
98-82-8	Isopropylbenzene	ND	5.0	1.1	ug/kg	
99-87-6	p-Isopropyltoluene	ND	5.0	1.2	ug/kg	
108-10-1	4-Methyl-2-pentanone	ND	25	5.5	ug/kg	
126-98-7	Methacrylonitrile	ND	25	9.2	ug/kg	
74-83-9	Methyl bromide	ND	5.0	2.0	ug/kg	
74-87-3	Methyl chloride	ND	5.0	2.0	ug/kg	
74-88-4	Methyl iodide	ND	10	1.1	ug/kg	
80-62-6	Methyl methacrylate	ND	5.0	1.8	ug/kg	
74-95-3	Methylene bromide	ND	5.0	1.5	ug/kg	
75-09-2	Methylene chloride	11.0	10	4.6	ug/kg	
78-93-3	Methyl ethyl ketone	ND	25	6.1	ug/kg	
1634-04-4	Methyl Tert Butyl Ether	ND	5.0	2.0	ug/kg	
91-20-3	Naphthalene	ND	5.0	2.0	ug/kg	
76-01-7	Pentachloroethane	ND	25	5.0	ug/kg	
107-12-0	Propionitrile	ND	50	16	ug/kg	
103-65-1	n-Propylbenzene	ND	5.0	1.4	ug/kg	
100-42-5	Styrene	ND	5.0	2.6	ug/kg	
630-20-6	1,1,1,2-Tetrachloroethane	ND	5.0	1.0	ug/kg	
71-55-6	1,1,1-Trichloroethane	ND	5.0	1.1	ug/kg	
79-34-5	1,1,2,2-Tetrachloroethane	ND	5.0	1.2	ug/kg	
79-00-5	1,1,2-Trichloroethane	ND	5.0	1.1	ug/kg	
87-61-6	1,2,3-Trichlorobenzene	ND	5.0	1.0	ug/kg	
96-18-4	1,2,3-Trichloropropane	ND	5.0	1.7	ug/kg	
120-82-1	1,2,4-Trichlorobenzene	ND	5.0	1.2	ug/kg	

Method Blank Summary

Job Number: F77899
Account: TETTNOAK Tetra Tech, Inc
Project: Holloman AFB; Alamogordo, NM

Sample	File ID	DF	Analyzed	By	Prep Date	Prep Batch	Analytical Batch
VH2461-MB	H066053.D	1	11/16/10	MM	n/a	n/a	VH2461

The QC reported here applies to the following samples: **Method:** SW846 8260B

F77899-1, F77899-20

CAS No.	Compound	Result	RL	MDL	Units	Q
95-63-6	1,2,4-Trimethylbenzene	ND	5.0	1.1	ug/kg	
108-67-8	1,3,5-Trimethylbenzene	ND	5.0	1.3	ug/kg	
127-18-4	Tetrachloroethylene	ND	5.0	1.0	ug/kg	
108-88-3	Toluene	ND	5.0	1.2	ug/kg	
79-01-6	Trichloroethylene	ND	5.0	1.2	ug/kg	
75-69-4	Trichlorofluoromethane	ND	5.0	2.0	ug/kg	
110-57-6	Trans-1,4-Dichloro-2-Butene	ND	25	5.0	ug/kg	
75-01-4	Vinyl chloride	ND	5.0	1.5	ug/kg	
108-05-4	Vinyl Acetate	ND	25	14	ug/kg	
	m,p-Xylene	ND	10	2.2	ug/kg	
95-47-6	o-Xylene	ND	5.0	1.0	ug/kg	

CAS No.	Surrogate Recoveries		Limits
1868-53-7	Dibromofluoromethane	105%	80-121%
2037-26-5	Toluene-D8	81%	71-130%
460-00-4	4-Bromofluorobenzene	91%	59-148%
17060-07-0	1,2-Dichloroethane-D4	99%	77-123%

Blank Spike Summary

Job Number: F77899
Account: TETTNOAK Tetra Tech, Inc
Project: Holloman AFB; Alamogordo, NM

Sample	File ID	DF	Analyzed	By	Prep Date	Prep Batch	Analytical Batch
VG2578-BS	G0068405.D	1	11/15/10	MM	n/a	n/a	VG2578

The QC reported here applies to the following samples: **Method:** SW846 8260B

F77899-2, F77899-3, F77899-4, F77899-5, F77899-6, F77899-7, F77899-8, F77899-9, F77899-10, F77899-11, F77899-12, F77899-13, F77899-14, F77899-15, F77899-16, F77899-17, F77899-18, F77899-19

CAS No.	Compound	Spike ug/kg	BSP ug/kg	BSP %	Limits
67-64-1	Acetone	250	121	48*	61-144
75-05-8	Acetonitrile	500	422	84	59-139
107-02-8	Acrolein	250	219	88	27-156
107-13-1	Acrylonitrile	250	168	67	55-144
107-05-1	Allyl chloride	50	52.1	104	41-152
71-43-2	Benzene	50	52.4	105	78-130
100-44-7	Benzyl Chloride	50	48.2	96	74-130
108-86-1	Bromobenzene	50	51.2	102	78-123
74-97-5	Bromochloromethane	50	49.7	99	72-122
75-27-4	Bromodichloromethane	50	52.5	105	73-122
75-25-2	Bromoform	50	48.4	97	70-139
104-51-8	n-Butylbenzene	50	51.2	102	80-138
135-98-8	sec-Butylbenzene	50	57.8	116	82-132
98-06-6	tert-Butylbenzene	50	56.0	112	79-130
108-90-7	Chlorobenzene	50	52.7	105	83-122
75-00-3	Chloroethane	50	69.5	139	61-153
67-66-3	Chloroform	50	53.3	107	79-129
544-10-5	1-Chlorohexane	50	46.2	92	85-137
95-49-8	o-Chlorotoluene	50	53.3	107	77-123
106-43-4	p-Chlorotoluene	50	54.7	109	78-129
110-75-8	2-Chloroethyl vinyl ether	250	246	98	52-142
75-15-0	Carbon disulfide	50	51.9	104	61-142
56-23-5	Carbon tetrachloride	50	61.1	122	79-135
75-34-3	1,1-Dichloroethane	50	50.9	102	77-132
75-35-4	1,1-Dichloroethylene	50	51.3	103	66-132
563-58-6	1,1-Dichloropropene	50	57.0	114	81-133
96-12-8	1,2-Dibromo-3-chloropropane	50	45.6	91	67-129
106-93-4	1,2-Dibromoethane	50	44.1	88	77-126
107-06-2	1,2-Dichloroethane	50	52.7	105	78-129
78-87-5	1,2-Dichloropropane	50	48.9	98	74-127
142-28-9	1,3-Dichloropropane	50	44.4	89	78-118
594-20-7	2,2-Dichloropropane	50	51.7	103	80-137
124-48-1	Dibromochloromethane	50	47.6	95	78-117
75-71-8	Dichlorodifluoromethane	50	61.6	123	35-162
156-59-2	cis-1,2-Dichloroethylene	50	52.8	106	74-123
10061-01-5	cis-1,3-Dichloropropene	50	53.3	107	79-130

Blank Spike Summary

Job Number: F77899
Account: TETTNOAK Tetra Tech, Inc
Project: Holloman AFB; Alamogordo, NM

Sample	File ID	DF	Analyzed	By	Prep Date	Prep Batch	Analytical Batch
VG2578-BS	G0068405.D	1	11/15/10	MM	n/a	n/a	VG2578

The QC reported here applies to the following samples: **Method:** SW846 8260B

F77899-2, F77899-3, F77899-4, F77899-5, F77899-6, F77899-7, F77899-8, F77899-9, F77899-10, F77899-11, F77899-12, F77899-13, F77899-14, F77899-15, F77899-16, F77899-17, F77899-18, F77899-19

CAS No.	Compound	Spike ug/kg	BSP ug/kg	BSP %	Limits
1476-11-5	cis-1,4-Dichloro-2-Butene	50	43.1	86	71-126
541-73-1	m-Dichlorobenzene	50	53.6	107	82-126
95-50-1	o-Dichlorobenzene	50	52.4	105	83-123
106-46-7	p-Dichlorobenzene	50	54.6	109	84-124
156-60-5	trans-1,2-Dichloroethylene	50	50.4	101	77-129
10061-02-6	trans-1,3-Dichloropropene	50	45.0	90	87-131
100-41-4	Ethylbenzene	50	53.0	106	82-124
97-63-2	Ethyl methacrylate	50	42.9	86	78-118
76-13-1	Freon 113	50	59.3	119	62-147
591-78-6	2-Hexanone	250	162	65*	67-130
87-68-3	Hexachlorobutadiene	50	52.9	106	77-150
110-54-3	Hexane	50	66.0	132	65-147
98-82-8	Isopropylbenzene	50	63.0	126	82-133
99-87-6	p-Isopropyltoluene	50	58.8	118	82-132
108-10-1	4-Methyl-2-pentanone	250	209	84	69-125
126-98-7	Methacrylonitrile	500	478	96	70-138
74-83-9	Methyl bromide	50	78.1	156*	60-146
74-87-3	Methyl chloride	50	53.7	107	58-163
74-88-4	Methyl iodide	50	55.0	110	66-128
80-62-6	Methyl methacrylate	50	44.0	88	73-125
74-95-3	Methylene bromide	50	52.4	105	75-128
75-09-2	Methylene chloride	50	66.2	132	62-140
78-93-3	Methyl ethyl ketone	250	168	67	66-134
1634-04-4	Methyl Tert Butyl Ether	50	47.0	94	70-131
91-20-3	Naphthalene	50	42.1	84	59-143
76-01-7	Pentachloroethane	50	59.2	118	64-156
107-12-0	Propionitrile	500	445	89	73-133
103-65-1	n-Propylbenzene	50	54.5	109	78-129
100-42-5	Styrene	50	45.7	91	79-123
630-20-6	1,1,1,2-Tetrachloroethane	50	52.8	106	81-121
71-55-6	1,1,1-Trichloroethane	50	57.2	114	80-133
79-34-5	1,1,2,2-Tetrachloroethane	50	46.3	93	70-128
79-00-5	1,1,2-Trichloroethane	50	44.9	90	76-118
87-61-6	1,2,3-Trichlorobenzene	50	49.1	98	78-136
96-18-4	1,2,3-Trichloropropane	50	46.1	92	74-125
120-82-1	1,2,4-Trichlorobenzene	50	46.1	92	82-137

Blank Spike Summary

Job Number: F77899
Account: TETTNOAK Tetra Tech, Inc
Project: Holloman AFB; Alamogordo, NM

Sample	File ID	DF	Analyzed	By	Prep Date	Prep Batch	Analytical Batch
VG2578-BS	G0068405.D	1	11/15/10	MM	n/a	n/a	VG2578

The QC reported here applies to the following samples: **Method:** SW846 8260B

F77899-2, F77899-3, F77899-4, F77899-5, F77899-6, F77899-7, F77899-8, F77899-9, F77899-10, F77899-11, F77899-12, F77899-13, F77899-14, F77899-15, F77899-16, F77899-17, F77899-18, F77899-19

CAS No.	Compound	Spike ug/kg	BSP ug/kg	BSP %	Limits
95-63-6	1,2,4-Trimethylbenzene	50	56.4	113	77-129
108-67-8	1,3,5-Trimethylbenzene	50	56.1	112	79-129
127-18-4	Tetrachloroethylene	50	55.5	111	79-132
108-88-3	Toluene	50	50.4	101	80-123
79-01-6	Trichloroethylene	50	56.4	113	78-132
75-69-4	Trichlorofluoromethane	50	64.9	130	67-149
110-57-6	Trans-1,4-Dichloro-2-Butene	50	46.6	93	74-138
75-01-4	Vinyl chloride	50	51.3	103	60-145
108-05-4	Vinyl Acetate	250	172	69	25-164
	m,p-Xylene	100	110	110	82-128
95-47-6	o-Xylene	50	51.8	104	82-126

CAS No.	Surrogate Recoveries	BSP	Limits
1868-53-7	Dibromofluoromethane	105%	80-121%
2037-26-5	Toluene-D8	93%	71-130%
460-00-4	4-Bromofluorobenzene	94%	59-148%
17060-07-0	1,2-Dichloroethane-D4	114%	77-123%

Blank Spike Summary

Job Number: F77899
Account: TETTNOAK Tetra Tech, Inc
Project: Holloman AFB; Alamogordo, NM

Sample	File ID	DF	Analyzed	By	Prep Date	Prep Batch	Analytical Batch
VH2460-BS	H066008.D	1	11/15/10	MM	n/a	n/a	VH2460

The QC reported here applies to the following samples: **Method:** SW846 8260B

F77899-21, F77899-22

CAS No.	Compound	Spike ug/kg	BSP ug/kg	BSP %	Limits
67-64-1	Acetone	250	140	56*	61-144
75-05-8	Acetonitrile	500	519	104	59-139
107-02-8	Acrolein	250	238	95	27-156
107-13-1	Acrylonitrile	250	273	109	55-144
107-05-1	Allyl chloride	50	47.7	95	41-152
71-43-2	Benzene	50	51.9	104	78-130
100-44-7	Benzyl Chloride	50	48.7	97	74-130
108-86-1	Bromobenzene	50	51.2	102	78-123
74-97-5	Bromochloromethane	50	48.5	97	72-122
75-27-4	Bromodichloromethane	50	51.3	103	73-122
75-25-2	Bromoform	50	42.4	85	70-139
104-51-8	n-Butylbenzene	50	56.5	113	80-138
135-98-8	sec-Butylbenzene	50	55.2	110	82-132
98-06-6	tert-Butylbenzene	50	54.6	109	79-130
108-90-7	Chlorobenzene	50	52.1	104	83-122
75-00-3	Chloroethane	50	45.2	90	61-153
67-66-3	Chloroform	50	50.9	102	79-129
544-10-5	1-Chlorohexane	50	51.1	102	85-137
95-49-8	o-Chlorotoluene	50	52.5	105	77-123
106-43-4	p-Chlorotoluene	50	54.1	108	78-129
110-75-8	2-Chloroethyl vinyl ether	250	269	108	52-142
75-15-0	Carbon disulfide	50	44.8	90	61-142
56-23-5	Carbon tetrachloride	50	48.6	97	79-135
75-34-3	1,1-Dichloroethane	50	50.6	101	77-132
75-35-4	1,1-Dichloroethylene	50	44.5	89	66-132
563-58-6	1,1-Dichloropropene	50	50.1	100	81-133
96-12-8	1,2-Dibromo-3-chloropropane	50	46.6	93	67-129
106-93-4	1,2-Dibromoethane	50	42.6	85	77-126
107-06-2	1,2-Dichloroethane	50	50.6	101	78-129
78-87-5	1,2-Dichloropropane	50	53.7	107	74-127
142-28-9	1,3-Dichloropropane	50	43.6	87	78-118
594-20-7	2,2-Dichloropropane	50	47.6	95	80-137
124-48-1	Dibromochloromethane	50	41.6	83	78-117
75-71-8	Dichlorodifluoromethane	50	45.8	92	35-162
156-59-2	cis-1,2-Dichloroethylene	50	52.9	106	74-123
10061-01-5	cis-1,3-Dichloropropene	50	55.0	110	79-130

Blank Spike Summary

Job Number: F77899
Account: TETTNOAK Tetra Tech, Inc
Project: Holloman AFB; Alamogordo, NM

Sample	File ID	DF	Analyzed	By	Prep Date	Prep Batch	Analytical Batch
VH2460-BS	H066008.D	1	11/15/10	MM	n/a	n/a	VH2460

The QC reported here applies to the following samples: **Method:** SW846 8260B

F77899-21, F77899-22

CAS No.	Compound	Spike ug/kg	BSP ug/kg	BSP %	Limits
1476-11-5	cis-1,4-Dichloro-2-Butene	50	45.7	91	71-126
541-73-1	m-Dichlorobenzene	50	53.9	108	82-126
95-50-1	o-Dichlorobenzene	50	53.2	106	83-123
106-46-7	p-Dichlorobenzene	50	51.4	103	84-124
156-60-5	trans-1,2-Dichloroethylene	50	48.2	96	77-129
10061-02-6	trans-1,3-Dichloropropene	50	48.1	96	87-131
100-41-4	Ethylbenzene	50	49.8	100	82-124
97-63-2	Ethyl methacrylate	50	39.0	78	78-118
76-13-1	Freon 113	50	47.8	96	62-147
591-78-6	2-Hexanone	250	201	80	67-130
87-68-3	Hexachlorobutadiene	50	55.6	111	77-150
110-54-3	Hexane	50	57.0	114	65-147
98-82-8	Isopropylbenzene	50	57.5	115	82-133
99-87-6	p-Isopropyltoluene	50	56.3	113	82-132
108-10-1	4-Methyl-2-pentanone	250	246	98	69-125
126-98-7	Methacrylonitrile	500	605	121	70-138
74-83-9	Methyl bromide	50	48.4	97	60-146
74-87-3	Methyl chloride	50	45.2	90	58-163
74-88-4	Methyl iodide	50	47.2	94	66-128
80-62-6	Methyl methacrylate	50	51.7	103	73-125
74-95-3	Methylene bromide	50	54.0	108	75-128
75-09-2	Methylene chloride	50	60.1	120	62-140
78-93-3	Methyl ethyl ketone	250	191	76	66-134
1634-04-4	Methyl Tert Butyl Ether	50	54.0	108	70-131
91-20-3	Naphthalene	50	51.1	102	59-143
76-01-7	Pentachloroethane	50	48.9	98	64-156
107-12-0	Propionitrile	500	563	113	73-133
103-65-1	n-Propylbenzene	50	54.8	110	78-129
100-42-5	Styrene	50	51.6	103	79-123
630-20-6	1,1,1,2-Tetrachloroethane	50	50.3	101	81-121
71-55-6	1,1,1-Trichloroethane	50	48.1	96	80-133
79-34-5	1,1,2,2-Tetrachloroethane	50	56.2	112	70-128
79-00-5	1,1,2-Trichloroethane	50	44.4	89	76-118
87-61-6	1,2,3-Trichlorobenzene	50	51.9	104	78-136
96-18-4	1,2,3-Trichloropropane	50	49.2	98	74-125
120-82-1	1,2,4-Trichlorobenzene	50	53.8	108	82-137

Blank Spike Summary

Job Number: F77899
Account: TETTNOAK Tetra Tech, Inc
Project: Holloman AFB; Alamogordo, NM

Sample	File ID	DF	Analyzed	By	Prep Date	Prep Batch	Analytical Batch
VH2460-BS	H066008.D	1	11/15/10	MM	n/a	n/a	VH2460

The QC reported here applies to the following samples: **Method:** SW846 8260B

F77899-21, F77899-22

CAS No.	Compound	Spike ug/kg	BSP ug/kg	BSP %	Limits
95-63-6	1,2,4-Trimethylbenzene	50	55.0	110	77-129
108-67-8	1,3,5-Trimethylbenzene	50	54.5	109	79-129
127-18-4	Tetrachloroethylene	50	48.8	98	79-132
108-88-3	Toluene	50	48.4	97	80-123
79-01-6	Trichloroethylene	50	50.2	100	78-132
75-69-4	Trichlorofluoromethane	50	45.5	91	67-149
110-57-6	Trans-1,4-Dichloro-2-Butene	50	48.2	96	74-138
75-01-4	Vinyl chloride	50	45.3	91	60-145
108-05-4	Vinyl Acetate	250	248	99	25-164
	m,p-Xylene	100	103	103	82-128
95-47-6	o-Xylene	50	50.4	101	82-126

CAS No.	Surrogate Recoveries	BSP	Limits
1868-53-7	Dibromofluoromethane	100%	80-121%
2037-26-5	Toluene-D8	92%	71-130%
460-00-4	4-Bromofluorobenzene	93%	59-148%
17060-07-0	1,2-Dichloroethane-D4	94%	77-123%

Blank Spike Summary

Job Number: F77899
Account: TETTNOAK Tetra Tech, Inc
Project: Holloman AFB; Alamogordo, NM

Sample	File ID	DF	Analyzed	By	Prep Date	Prep Batch	Analytical Batch
VH2461-BS	H066052.D	1	11/16/10	MM	n/a	n/a	VH2461

The QC reported here applies to the following samples: **Method:** SW846 8260B

F77899-1, F77899-20

CAS No.	Compound	Spike ug/kg	BSP ug/kg	BSP %	Limits
67-64-1	Acetone	250	149	60*	61-144
75-05-8	Acetonitrile	500	526	105	59-139
107-02-8	Acrolein	250	236	94	27-156
107-13-1	Acrylonitrile	250	271	108	55-144
107-05-1	Allyl chloride	50	53.1	106	41-152
71-43-2	Benzene	50	54.0	108	78-130
100-44-7	Benzyl Chloride	50	50.6	101	74-130
108-86-1	Bromobenzene	50	52.4	105	78-123
74-97-5	Bromochloromethane	50	51.7	103	72-122
75-27-4	Bromodichloromethane	50	52.4	105	73-122
75-25-2	Bromoform	50	42.3	85	70-139
104-51-8	n-Butylbenzene	50	60.1	120	80-138
135-98-8	sec-Butylbenzene	50	57.9	116	82-132
98-06-6	tert-Butylbenzene	50	56.8	114	79-130
108-90-7	Chlorobenzene	50	52.3	105	83-122
75-00-3	Chloroethane	50	67.6	135	61-153
67-66-3	Chloroform	50	54.4	109	79-129
544-10-5	1-Chlorohexane	50	53.0	106	85-137
95-49-8	o-Chlorotoluene	50	56.1	112	77-123
106-43-4	p-Chlorotoluene	50	56.6	113	78-129
110-75-8	2-Chloroethyl vinyl ether	250	241	96	52-142
75-15-0	Carbon disulfide	50	57.6	115	61-142
56-23-5	Carbon tetrachloride	50	53.3	107	79-135
75-34-3	1,1-Dichloroethane	50	52.5	105	77-132
75-35-4	1,1-Dichloroethylene	50	60.7	121	66-132
563-58-6	1,1-Dichloropropene	50	54.8	110	81-133
96-12-8	1,2-Dibromo-3-chloropropane	50	46.5	93	67-129
106-93-4	1,2-Dibromoethane	50	41.8	84	77-126
107-06-2	1,2-Dichloroethane	50	52.1	104	78-129
78-87-5	1,2-Dichloropropane	50	52.5	105	74-127
142-28-9	1,3-Dichloropropane	50	43.4	87	78-118
594-20-7	2,2-Dichloropropane	50	55.6	111	80-137
124-48-1	Dibromochloromethane	50	41.2	82	78-117
75-71-8	Dichlorodifluoromethane	50	107	214*	35-162
156-59-2	cis-1,2-Dichloroethylene	50	53.9	108	74-123
10061-01-5	cis-1,3-Dichloropropene	50	54.2	108	79-130

Blank Spike Summary

Job Number: F77899
Account: TETTNOAK Tetra Tech, Inc
Project: Holloman AFB; Alamogordo, NM

Sample	File ID	DF	Analyzed	By	Prep Date	Prep Batch	Analytical Batch
VH2461-BS	H066052.D	1	11/16/10	MM	n/a	n/a	VH2461

The QC reported here applies to the following samples: **Method:** SW846 8260B

F77899-1, F77899-20

CAS No.	Compound	Spike ug/kg	BSP ug/kg	BSP %	Limits
1476-11-5	cis-1,4-Dichloro-2-Butene	50	48.1	96	71-126
541-73-1	m-Dichlorobenzene	50	57.0	114	82-126
95-50-1	o-Dichlorobenzene	50	54.7	109	83-123
106-46-7	p-Dichlorobenzene	50	55.7	111	84-124
156-60-5	trans-1,2-Dichloroethylene	50	51.7	103	77-129
10061-02-6	trans-1,3-Dichloropropene	50	48.1	96	87-131
100-41-4	Ethylbenzene	50	51.6	103	82-124
97-63-2	Ethyl methacrylate	50	39.0	78	78-118
76-13-1	Freon 113	50	67.4	135	62-147
591-78-6	2-Hexanone	250	200	80	67-130
87-68-3	Hexachlorobutadiene	50	59.6	119	77-150
110-54-3	Hexane	50	62.4	125	65-147
98-82-8	Isopropylbenzene	50	59.9	120	82-133
99-87-6	p-Isopropyltoluene	50	59.9	120	82-132
108-10-1	4-Methyl-2-pentanone	250	246	98	69-125
126-98-7	Methacrylonitrile	500	598	120	70-138
74-83-9	Methyl bromide	50	72.1	144	60-146
74-87-3	Methyl chloride	50	83.8	168*	58-163
74-88-4	Methyl iodide	50	60.9	122	66-128
80-62-6	Methyl methacrylate	50	49.6	99	73-125
74-95-3	Methylene bromide	50	55.1	110	75-128
75-09-2	Methylene chloride	50	52.6	105	62-140
78-93-3	Methyl ethyl ketone	250	195	78	66-134
1634-04-4	Methyl Tert Butyl Ether	50	53.3	107	70-131
91-20-3	Naphthalene	50	52.8	106	59-143
76-01-7	Pentachloroethane	50	56.3	113	64-156
107-12-0	Propionitrile	500	580	116	73-133
103-65-1	n-Propylbenzene	50	57.5	115	78-129
100-42-5	Styrene	50	52.9	106	79-123
630-20-6	1,1,1,2-Tetrachloroethane	50	51.5	103	81-121
71-55-6	1,1,1-Trichloroethane	50	52.9	106	80-133
79-34-5	1,1,2,2-Tetrachloroethane	50	53.5	107	70-128
79-00-5	1,1,2-Trichloroethane	50	43.4	87	76-118
87-61-6	1,2,3-Trichlorobenzene	50	54.6	109	78-136
96-18-4	1,2,3-Trichloropropane	50	47.8	96	74-125
120-82-1	1,2,4-Trichlorobenzene	50	56.8	114	82-137

Blank Spike Summary

Job Number: F77899
Account: TETTNOAK Tetra Tech, Inc
Project: Holloman AFB; Alamogordo, NM

Sample	File ID	DF	Analyzed	By	Prep Date	Prep Batch	Analytical Batch
VH2461-BS	H066052.D	1	11/16/10	MM	n/a	n/a	VH2461

The QC reported here applies to the following samples: **Method:** SW846 8260B

F77899-1, F77899-20

CAS No.	Compound	Spike ug/kg	BSP ug/kg	BSP %	Limits
95-63-6	1,2,4-Trimethylbenzene	50	57.7	115	77-129
108-67-8	1,3,5-Trimethylbenzene	50	57.7	115	79-129
127-18-4	Tetrachloroethylene	50	51.1	102	79-132
108-88-3	Toluene	50	48.8	98	80-123
79-01-6	Trichloroethylene	50	54.0	108	78-132
75-69-4	Trichlorofluoromethane	50	72.1	144	67-149
110-57-6	Trans-1,4-Dichloro-2-Butene	50	48.3	97	74-138
75-01-4	Vinyl chloride	50	66.1	132	60-145
108-05-4	Vinyl Acetate	250	243	97	25-164
	m,p-Xylene	100	106	106	82-128
95-47-6	o-Xylene	50	52.1	104	82-126

CAS No.	Surrogate Recoveries	BSP	Limits
1868-53-7	Dibromofluoromethane	102%	80-121%
2037-26-5	Toluene-D8	87%	71-130%
460-00-4	4-Bromofluorobenzene	96%	59-148%
17060-07-0	1,2-Dichloroethane-D4	106%	77-123%

Matrix Spike/Matrix Spike Duplicate Summary

Job Number: F77899
Account: TETTNOAK Tetra Tech, Inc
Project: Holloman AFB; Alamogordo, NM

Sample	File ID	DF	Analyzed	By	Prep Date	Prep Batch	Analytical Batch
F77899-3MS	G0068410.D	1	11/15/10	MM	n/a	n/a	VG2578
F77899-3MSD	G0068411.D	1	11/15/10	MM	n/a	n/a	VG2578
F77899-3	G0068409.D	1	11/15/10	MM	n/a	n/a	VG2578

The QC reported here applies to the following samples: **Method:** SW846 8260B

F77899-2, F77899-3, F77899-4, F77899-5, F77899-6, F77899-7, F77899-8, F77899-9, F77899-10, F77899-11, F77899-12, F77899-13, F77899-14, F77899-15, F77899-16, F77899-17, F77899-18, F77899-19

CAS No.	Compound	F77899-3 ug/kg	Q	Spike ug/kg	MS ug/kg	MS %	MSD ug/kg	MSD %	RPD	Limits Rec/RPD
67-64-1	Acetone	ND		331	121	37*	121	37*	0	61-144/29
75-05-8	Acetonitrile	ND		662	380	57*	349	53*	9	59-139/30
107-02-8	Acrolein	ND		331	220	67	224	68	2	27-156/39
107-13-1	Acrylonitrile	ND		331	162	49*	153	46*	6	55-144/24
107-05-1	Allyl chloride	ND		66.2	61.5	93	62.4	95	1	41-152/24
71-43-2	Benzene	ND		66.2	65.1	98	64.8	98	0	78-130/25
100-44-7	Benzyl Chloride	ND		66.2	46.8	71*	49.1	74	5	74-130/28
108-86-1	Bromobenzene	ND		66.2	62.7	95	67.8	103	8	78-123/30
74-97-5	Bromochloromethane	ND		66.2	56.5	85	57.4	87	2	72-122/23
75-27-4	Bromodichloromethane	ND		66.2	66.8	101	63.4	96	5	73-122/25
75-25-2	Bromoform	ND		66.2	51.9	78	52.6	80	1	70-139/26
104-51-8	n-Butylbenzene	ND		66.2	59.6	90	60.6	92	2	80-138/31
135-98-8	sec-Butylbenzene	ND		66.2	69.7	105	74.2	112	6	82-132/29
98-06-6	tert-Butylbenzene	ND		66.2	69.4	105	73.5	111	6	79-130/29
108-90-7	Chlorobenzene	ND		66.2	65.8	99	67.1	102	2	83-122/23
75-00-3	Chloroethane	ND		66.2	92.3	140	85.5	130	8	61-153/31
67-66-3	Chloroform	ND		66.2	67.5	102	69.3	105	3	79-129/27
544-10-5	1-Chlorohexane	ND		66.2	54.4	82*	53.7	81*	1	85-137/29
95-49-8	o-Chlorotoluene	ND		66.2	67.0	101	73.0	111	9	77-123/31
106-43-4	p-Chlorotoluene	ND		66.2	67.8	102	71.0	108	5	78-129/29
110-75-8	2-Chloroethyl vinyl ether	ND		331	256	77	252	76	2	52-142/25
75-15-0	Carbon disulfide	ND		66.2	63.2	96	63.3	96	0	61-142/27
56-23-5	Carbon tetrachloride	ND		66.2	75.0	113	75.2	114	0	79-135/29
75-34-3	1,1-Dichloroethane	ND		66.2	62.1	94	61.4	93	1	77-132/26
75-35-4	1,1-Dichloroethylene	ND		66.2	62.3	94	63.1	96	1	66-132/27
563-58-6	1,1-Dichloropropene	ND		66.2	68.5	104	67.8	103	1	81-133/26
96-12-8	1,2-Dibromo-3-chloropropane	ND		66.2	43.1	65*	43.4	66*	1	67-129/29
106-93-4	1,2-Dibromoethane	ND		66.2	50.4	76*	49.6	75*	2	77-126/24
107-06-2	1,2-Dichloroethane	ND		66.2	62.6	95	61.1	93	2	78-129/24
78-87-5	1,2-Dichloropropane	ND		66.2	61.5	93	62.8	95	2	74-127/27
142-28-9	1,3-Dichloropropane	ND		66.2	51.8	78	52.3	79	1	78-118/26
594-20-7	2,2-Dichloropropane	ND		66.2	64.9	98	65.3	99	1	80-137/28
124-48-1	Dibromochloromethane	ND		66.2	57.8	87	56.7	86	2	78-117/27
75-71-8	Dichlorodifluoromethane	ND		66.2	71.6	108	73.2	111	2	35-162/30
156-59-2	cis-1,2-Dichloroethylene	ND		66.2	63.9	97	66.7	101	4	74-123/26
10061-01-5	cis-1,3-Dichloropropene	ND		66.2	61.8	93	61.2	93	1	79-130/23

Matrix Spike/Matrix Spike Duplicate Summary

Job Number: F77899
Account: TETTNOAK Tetra Tech, Inc
Project: Holloman AFB; Alamogordo, NM

Sample	File ID	DF	Analyzed	By	Prep Date	Prep Batch	Analytical Batch
F77899-3MS	G0068410.D	1	11/15/10	MM	n/a	n/a	VG2578
F77899-3MSD	G0068411.D	1	11/15/10	MM	n/a	n/a	VG2578
F77899-3	G0068409.D	1	11/15/10	MM	n/a	n/a	VG2578

The QC reported here applies to the following samples: **Method:** SW846 8260B

F77899-2, F77899-3, F77899-4, F77899-5, F77899-6, F77899-7, F77899-8, F77899-9, F77899-10, F77899-11, F77899-12, F77899-13, F77899-14, F77899-15, F77899-16, F77899-17, F77899-18, F77899-19

CAS No.	Compound	F77899-3 ug/kg	Q	Spike ug/kg	MS ug/kg	MS %	MSD ug/kg	MSD %	RPD	Limits Rec/RPD
1476-11-5	cis-1,4-Dichloro-2-Butene	ND		66.2	48.6	73	47.9	73	1	71-126/28
541-73-1	m-Dichlorobenzene	ND		66.2	64.6	98	69.6	105	7	82-126/29
95-50-1	o-Dichlorobenzene	ND		66.2	62.0	94	65.9	100	6	83-123/28
106-46-7	p-Dichlorobenzene	ND		66.2	66.0	100	69.9	106	6	84-124/28
156-60-5	trans-1,2-Dichloroethylene	ND		66.2	63.6	96	63.2	96	1	77-129/27
10061-02-6	trans-1,3-Dichloropropene	ND		66.2	52.9	80*	52.9	80*	0	87-131/27
100-41-4	Ethylbenzene	ND		66.2	67.7	102	68.9	104	2	82-124/25
97-63-2	Ethyl methacrylate	ND		66.2	43.7	66*	43.4	66*	1	78-118/30
76-13-1	Freon 113	ND		66.2	71.6	108	73.5	111	3	62-147/29
591-78-6	2-Hexanone	ND		331	162	49*	158	48*	3	67-130/29
87-68-3	Hexachlorobutadiene	ND		66.2	55.8	84	57.9	88	4	77-150/36
110-54-3	Hexane	ND		66.2	74.8	113	72.5	110	3	65-147/27
98-82-8	Isopropylbenzene	ND		66.2	78.2	118	78.7	119	1	82-133/27
99-87-6	p-Isopropyltoluene	ND		66.2	72.4	109	75.1	114	4	82-132/29
108-10-1	4-Methyl-2-pentanone	ND		331	216	65*	212	64*	2	69-125/24
126-98-7	Methacrylonitrile	ND		662	483	73	473	72	2	70-138/22
74-83-9	Methyl bromide	ND		66.2	109	165*	110	167*	1	60-146/31
74-87-3	Methyl chloride	ND		66.2	65.1	98	63.9	97	2	58-163/26
74-88-4	Methyl iodide	ND		66.2	69.0	104	67.7	103	2	66-128/27
80-62-6	Methyl methacrylate	ND		66.2	48.9	74	50.3	76	3	73-125/24
74-95-3	Methylene bromide	ND		66.2	58.5	88	58.0	88	1	75-128/26
75-09-2	Methylene chloride	13.7		66.2	95.8	124	98.0	128	2	62-140/25
78-93-3	Methyl ethyl ketone	ND		331	149	45*	153	46*	3	66-134/23
1634-04-4	Methyl Tert Butyl Ether	ND		66.2	52.5	79	52.7	80	0	70-131/25
91-20-3	Naphthalene	ND		66.2	42.6	64	43.9	67	3	59-143/31
76-01-7	Pentachloroethane	ND		66.2	72.0	109	74.9	113	4	64-156/37
107-12-0	Propionitrile	ND		662	417	63*	362	55*	14	73-133/23
103-65-1	n-Propylbenzene	ND		66.2	68.9	104	72.0	109	4	78-129/29
100-42-5	Styrene	ND		66.2	56.0	85	56.1	85	0	79-123/28
630-20-6	1,1,1,2-Tetrachloroethane	ND		66.2	65.6	99	65.1	99	1	81-121/25
71-55-6	1,1,1-Trichloroethane	ND		66.2	70.8	107	71.9	109	2	80-133/27
79-34-5	1,1,2,2-Tetrachloroethane	ND		66.2	50.0	76	53.0	80	6	70-128/30
79-00-5	1,1,2-Trichloroethane	ND		66.2	55.1	83	51.8	78	6	76-118/28
87-61-6	1,2,3-Trichlorobenzene	ND		66.2	51.1	77*	52.9	80	3	78-136/34
96-18-4	1,2,3-Trichloropropane	ND		66.2	49.0	74	53.2	81	8	74-125/30
120-82-1	1,2,4-Trichlorobenzene	ND		66.2	49.3	75*	51.4	78*	4	82-137/32

Matrix Spike/Matrix Spike Duplicate Summary

Job Number: F77899
Account: TETTNOAK Tetra Tech, Inc
Project: Holloman AFB; Alamogordo, NM

Sample	File ID	DF	Analyzed	By	Prep Date	Prep Batch	Analytical Batch
F77899-3MS	G0068410.D	1	11/15/10	MM	n/a	n/a	VG2578
F77899-3MSD	G0068411.D	1	11/15/10	MM	n/a	n/a	VG2578
F77899-3	G0068409.D	1	11/15/10	MM	n/a	n/a	VG2578

The QC reported here applies to the following samples: **Method:** SW846 8260B

F77899-2, F77899-3, F77899-4, F77899-5, F77899-6, F77899-7, F77899-8, F77899-9, F77899-10, F77899-11, F77899-12, F77899-13, F77899-14, F77899-15, F77899-16, F77899-17, F77899-18, F77899-19

CAS No.	Compound	F77899-3 ug/kg	Q	Spike ug/kg	MS ug/kg	MS %	MSD ug/kg	MSD %	RPD	Limits Rec/RPD
95-63-6	1,2,4-Trimethylbenzene	ND		66.2	72.6	110	75.9	115	4	77-129/29
108-67-8	1,3,5-Trimethylbenzene	ND		66.2	69.1	104	74.0	112	7	79-129/31
127-18-4	Tetrachloroethylene	ND		66.2	71.4	108	71.2	108	0	79-132/27
108-88-3	Toluene	ND		66.2	63.3	96	65.8	100	4	80-123/26
79-01-6	Trichloroethylene	ND		66.2	73.2	111	70.8	107	3	78-132/28
75-69-4	Trichlorofluoromethane	ND		66.2	82.1	124	79.6	121	3	67-149/29
110-57-6	Trans-1,4-Dichloro-2-Butene	ND		66.2	45.5	69*	52.6	80	14	74-138/30
75-01-4	Vinyl chloride	ND		66.2	63.7	96	64.7	98	2	60-145/29
108-05-4	Vinyl Acetate	ND		331	132	40	116	35	13	25-164/35
	m,p-Xylene	ND		132	140	106	143	108	2	82-128/25
95-47-6	o-Xylene	ND		66.2	64.2	97	65.2	99	2	82-126/25

CAS No.	Surrogate Recoveries	MS	MSD	F77899-3	Limits
1868-53-7	Dibromofluoromethane	104%	106%	108%	80-121%
2037-26-5	Toluene-D8	96%	94%	95%	71-130%
460-00-4	4-Bromofluorobenzene	94%	97%	98%	59-148%
17060-07-0	1,2-Dichloroethane-D4	93%	101%	107%	77-123%

Matrix Spike/Matrix Spike Duplicate Summary

Job Number: F77899
Account: TETTNOAK Tetra Tech, Inc
Project: Holloman AFB; Alamogordo, NM

Sample	File ID	DF	Analyzed	By	Prep Date	Prep Batch	Analytical Batch
F77991-3MS	H066011.D	1	11/15/10	MM	n/a	n/a	VH2460
F77991-3MSD	H066012.D	1	11/15/10	MM	n/a	n/a	VH2460
F77991-3	H066010.D	1	11/15/10	MM	n/a	n/a	VH2460

The QC reported here applies to the following samples: **Method:** SW846 8260B

F77899-21, F77899-22

CAS No.	Compound	F77991-3 ug/kg	Q	Spike ug/kg	MS ug/kg	MS %	MSD ug/kg	MSD %	RPD	Limits Rec/RPD
67-64-1	Acetone	22 U		309	72.0	23*	101	36*	34*	61-144/29
75-05-8	Acetonitrile	22 U		618	35.3	6*	397	70	167*	59-139/30
107-02-8	Acrolein	11 U		309	197	64	164	58	18	27-156/39
107-13-1	Acrylonitrile	11 U		309	188	61	199	70	6	55-144/24
107-05-1	Allyl chloride	11 U		61.8	60.5	98	45.1	79	29*	41-152/24
71-43-2	Benzene	2.2 U		61.8	64.7	105	55.2	97	16	78-130/25
100-44-7	Benzyl Chloride	2.2 U		61.8	38.0	61*	26.3	46*	36*	74-130/28
108-86-1	Bromobenzene	2.2 U		61.8	63.5	103	44.7	79	35*	78-123/30
74-97-5	Bromochloromethane	2.2 U		61.8	62.1	100	50.5	89	21	72-122/23
75-27-4	Bromodichloromethane	2.2 U		61.8	60.0	97	52.5	92	13	73-122/25
75-25-2	Bromoform	2.2 U		61.8	46.2	75	38.6	68*	18	70-139/26
104-51-8	n-Butylbenzene	2.2 U		61.8	59.5	96	36.3	64*	48*	80-138/31
135-98-8	sec-Butylbenzene	2.2 U		61.8	68.1	110	41.8	74*	48*	82-132/29
98-06-6	tert-Butylbenzene	2.2 U		61.8	71.6	116	44.4	78*	47*	79-130/29
108-90-7	Chlorobenzene	2.2 U		61.8	61.8	100	47.8	84	26*	83-122/23
75-00-3	Chloroethane	2.2 U		61.8	55.8	90	49.8	88	11	61-153/31
67-66-3	Chloroform	2.2 U		61.8	65.3	106	54.3	96	18	79-129/27
544-10-5	1-Chlorohexane	2.2 U		61.8	60.1	97	41.4	73*	37*	85-137/29
95-49-8	o-Chlorotoluene	2.2 U		61.8	65.6	106	43.5	77	41*	77-123/31
106-43-4	p-Chlorotoluene	2.2 U		61.8	63.7	103	41.3	73*	43*	78-129/29
110-75-8	2-Chloroethyl vinyl ether	11 U		309	364	118	208	73	55*	52-142/25
75-15-0	Carbon disulfide	2.2 U		61.8	54.2	88	42.2	74	25	61-142/27
56-23-5	Carbon tetrachloride	2.2 U		61.8	67.7	110	52.3	92	26	79-135/29
75-34-3	1,1-Dichloroethane	2.2 U		61.8	63.5	103	50.2	88	23	77-132/26
75-35-4	1,1-Dichloroethylene	2.2 U		61.8	58.4	95	46.5	82	23	66-132/27
563-58-6	1,1-Dichloropropene	2.2 U		61.8	62.7	101	50.7	89	21	81-133/26
96-12-8	1,2-Dibromo-3-chloropropane	2.2 U		61.8	38.3	62*	34.2	60*	11	67-129/29
106-93-4	1,2-Dibromoethane	2.2 U		61.8	42.5	69*	38.9	69*	9	77-126/24
107-06-2	1,2-Dichloroethane	2.2 U		61.8	56.2	91	52.3	92	7	78-129/24
78-87-5	1,2-Dichloropropane	2.2 U		61.8	60.4	98	52.3	92	14	74-127/27
142-28-9	1,3-Dichloropropane	2.2 U		61.8	44.5	72*	40.5	71*	9	78-118/26
594-20-7	2,2-Dichloropropane	2.2 U		61.8	63.0	102	50.9	90	21	80-137/28
124-48-1	Dibromochloromethane	2.2 U		61.8	48.0	78	41.0	72*	16	78-117/27
75-71-8	Dichlorodifluoromethane	2.2 U		61.8	62.1	100	49.5	87	23	35-162/30
156-59-2	cis-1,2-Dichloroethylene	2.2 U		61.8	67.8	110	52.6	93	25	74-123/26
10061-01-5	cis-1,3-Dichloropropene	2.2 U		61.8	58.8	95	50.3	89	16	79-130/23

Matrix Spike/Matrix Spike Duplicate Summary

Job Number: F77899
Account: TETTNOAK Tetra Tech, Inc
Project: Holloman AFB; Alamogordo, NM

Sample	File ID	DF	Analyzed	By	Prep Date	Prep Batch	Analytical Batch
F77991-3MS	H066011.D	1	11/15/10	MM	n/a	n/a	VH2460
F77991-3MSD	H066012.D	1	11/15/10	MM	n/a	n/a	VH2460
F77991-3	H066010.D	1	11/15/10	MM	n/a	n/a	VH2460

The QC reported here applies to the following samples: **Method:** SW846 8260B

F77899-21, F77899-22

CAS No.	Compound	F77991-3 ug/kg	Q	Spike ug/kg	MS ug/kg	MS %	MSD ug/kg	MSD %	RPD	Limits Rec/RPD
1476-11-5	cis-1,4-Dichloro-2-Butene	11 U		61.8	39.9	65*	32.7	58*	20	71-126/28
541-73-1	m-Dichlorobenzene	2.2 U		61.8	59.5	96	37.8	67*	45*	82-126/29
95-50-1	o-Dichlorobenzene	2.2 U		61.8	54.2	88	38.9	69*	33*	83-123/28
106-46-7	p-Dichlorobenzene	2.2 U		61.8	57.7	93	41.0	72*	34*	84-124/28
156-60-5	trans-1,2-Dichloroethylene	2.2 U		61.8	62.6	101	49.3	87	24	77-129/27
10061-02-6	trans-1,3-Dichloropropene	2.2 U		61.8	50.2	81*	42.8	75*	16	87-131/27
100-41-4	Ethylbenzene	2.2 U		61.8	64.5	104	49.9	88	26*	82-124/25
97-63-2	Ethyl methacrylate	11 U		61.8	27.9	45*	26.5	47*	5	78-118/30
76-13-1	Freon 113	2.2 U		61.8	65.8	106	49.8	88	28	62-147/29
591-78-6	2-Hexanone	11 U		309	144	47*	131	46*	9	67-130/29
87-68-3	Hexachlorobutadiene	2.2 U		61.8	52.1	84	33.2	58*	44*	77-150/36
110-54-3	Hexane	2.2 U		61.8	68.1	110	48.8	86	33*	65-147/27
98-82-8	Isopropylbenzene	2.2 U		61.8	72.3	117	51.7	91	33*	82-133/27
99-87-6	p-Isopropyltoluene	2.2 U		61.8	70.7	114	43.5	77*	48*	82-132/29
108-10-1	4-Methyl-2-pentanone	11 U		309	202	65*	211	74	4	69-125/24
126-98-7	Methacrylonitrile	11 U		618	509	82	532	94	4	70-138/22
74-83-9	Methyl bromide	2.2 U		61.8	78.9	128	62.6	110	23	60-146/31
74-87-3	Methyl chloride	2.2 U		61.8	47.1	76	45.8	81	3	58-163/26
74-88-4	Methyl iodide	4.4 U		61.8	66.2	107	50.7	89	27	66-128/27
80-62-6	Methyl methacrylate	2.2 U		61.8	49.0	79	51.2	90	4	73-125/24
74-95-3	Methylene bromide	2.2 U		61.8	54.6	88	51.0	90	7	75-128/26
75-09-2	Methylene chloride	3.0	I	61.8	95.9	150*	78.4	133	20	62-140/25
78-93-3	Methyl ethyl ketone	11 U		309	128	41*	146	51*	13	66-134/23
1634-04-4	Methyl Tert Butyl Ether	2.2 U		61.8	61.9	100	51.8	91	18	70-131/25
91-20-3	Naphthalene	2.2 U		61.8	27.9	45*	22.6	40*	21	59-143/31
76-01-7	Pentachloroethane	11 U		61.8	72.2	117	53.6	94	30	64-156/37
107-12-0	Propionitrile	22 U		618	385	62*	493	87	25*	73-133/23
103-65-1	n-Propylbenzene	2.2 U		61.8	68.9	111	43.3	76*	46*	78-129/29
100-42-5	Styrene	2.2 U		61.8	57.3	93	41.1	72*	33*	79-123/28
630-20-6	1,1,1,2-Tetrachloroethane	2.2 U		61.8	63.2	102	50.8	89	22	81-121/25
71-55-6	1,1,1-Trichloroethane	2.2 U		61.8	65.6	106	53.0	93	21	80-133/27
79-34-5	1,1,2,2-Tetrachloroethane	7.0		61.8	52.9	74	44.9	67*	16	70-128/30
79-00-5	1,1,2-Trichloroethane	2.2 U		61.8	46.3	75*	40.9	72*	12	76-118/28
87-61-6	1,2,3-Trichlorobenzene	2.2 U		61.8	35.0	57*	26.2	46*	29	78-136/34
96-18-4	1,2,3-Trichloropropane	2.2 U		61.8	48.2	78	43.4	76	10	74-125/30
120-82-1	1,2,4-Trichlorobenzene	2.2 U		61.8	39.2	63*	29.7	52*	28	82-137/32

Matrix Spike/Matrix Spike Duplicate Summary

Job Number: F77899
Account: TETTNOAK Tetra Tech, Inc
Project: Holloman AFB; Alamogordo, NM

Sample	File ID	DF	Analyzed	By	Prep Date	Prep Batch	Analytical Batch
F77991-3MS	H066011.D	1	11/15/10	MM	n/a	n/a	VH2460
F77991-3MSD	H066012.D	1	11/15/10	MM	n/a	n/a	VH2460
F77991-3	H066010.D	1	11/15/10	MM	n/a	n/a	VH2460

The QC reported here applies to the following samples: **Method:** SW846 8260B

F77899-21, F77899-22

CAS No.	Compound	F77991-3 ug/kg	Q	Spike ug/kg	MS ug/kg	MS %	MSD ug/kg	MSD %	RPD	Limits Rec/RPD
95-63-6	1,2,4-Trimethylbenzene	2.2 U		61.8	70.1	113	47.3	83	39*	77-129/29
108-67-8	1,3,5-Trimethylbenzene	2.2 U		61.8	69.9	113	45.8	81	42*	79-129/31
127-18-4	Tetrachloroethylene	2.2 U		61.8	66.8	108	50.2	88	28*	79-132/27
108-88-3	Toluene	2.2 U		61.8	63.8	103	48.8	86	27*	80-123/26
79-01-6	Trichloroethylene	2.2 U		61.8	64.5	104	53.1	94	19	78-132/28
75-69-4	Trichlorofluoromethane	2.2 U		61.8	57.1	92	51.9	91	10	67-149/29
110-57-6	Trans-1,4-Dichloro-2-Butene	11 U		61.8	45.5	74	42.0	74	8	74-138/30
75-01-4	Vinyl chloride	2.2 U		61.8	46.9	76	45.8	81	2	60-145/29
108-05-4	Vinyl Acetate	11 U		309	20.3	7*	ND	0*	200*	25-164/35
	m,p-Xylene	4.4 U		124	132	107	103	91	25	82-128/25
95-47-6	o-Xylene	2.2 U		61.8	63.1	102	48.5	85	26*	82-126/25

CAS No.	Surrogate Recoveries	MS	MSD	F77991-3	Limits
1868-53-7	Dibromofluoromethane	98%	104%	108%	80-121%
2037-26-5	Toluene-D8	93%	89%	85%	71-130%
460-00-4	4-Bromofluorobenzene	105%	97%	109%	59-148%
17060-07-0	1,2-Dichloroethane-D4	92%	112%	102%	77-123%

Matrix Spike/Matrix Spike Duplicate Summary

Job Number: F77899
Account: TETTNOAK Tetra Tech, Inc
Project: Holloman AFB; Alamogordo, NM

Sample	File ID	DF	Analyzed	By	Prep Date	Prep Batch	Analytical Batch
F77957-2MS	H066055.D	1	11/16/10	MM	n/a	n/a	VH2461
F77957-2MSD	H066056.D	1	11/16/10	MM	n/a	n/a	VH2461
F77957-2	H066054.D	1	11/16/10	MM	n/a	n/a	VH2461

The QC reported here applies to the following samples: **Method:** SW846 8260B

F77899-1, F77899-20

CAS No.	Compound	F77957-2 ug/kg	Q	Spike ug/kg	MS ug/kg	MS %	MSD ug/kg	MSD %	RPD	Limits Rec/RPD
67-64-1	Acetone	29 UQ	Q	298	107	36*	102	36*	5	61-144/29
75-05-8	Acetonitrile	29 U		596	461	77	420	73	9	59-139/30
107-02-8	Acrolein	15 U		298	259	87	241	84	7	27-156/39
107-13-1	Acrylonitrile	15 U		298	224	75	223	78	0	55-144/24
107-05-1	Allyl chloride	15 U		59.6	56.3	94	61.9	108	9	41-152/24
71-43-2	Benzene	2.9 U		59.6	50.8	85	53.7	94	6	78-130/25
100-44-7	Benzyl Chloride	2.9 U		59.6	43.8	73*	48.5	85	10	74-130/28
108-86-1	Bromobenzene	2.9 U		59.6	46.9	79	52.7	92	12	78-123/30
74-97-5	Bromochloromethane	2.9 U		59.6	43.1	72	45.1	79	5	72-122/23
75-27-4	Bromodichloromethane	2.9 U		59.6	47.1	79	46.6	81	1	73-122/25
75-25-2	Bromoform	2.9 U		59.6	33.6	56*	35.5	62*	5	70-139/26
104-51-8	n-Butylbenzene	1.1	J	59.6	50.4	83	57.4	98	13	80-138/31
135-98-8	sec-Butylbenzene	2.9 U		59.6	51.0	86	58.0	101	13	82-132/29
98-06-6	tert-Butylbenzene	2.9 U		59.6	51.2	86	59.6	104	15	79-130/29
108-90-7	Chlorobenzene	2.9 U		59.6	50.4	85	58.1	101	14	83-122/23
75-00-3	Chloroethane	2.9 U		59.6	53.1	89	60.2	105	13	61-153/31
67-66-3	Chloroform	2.9 U		59.6	48.5	81	51.5	90	6	79-129/27
544-10-5	1-Chlorohexane	2.9 U		59.6	46.6	78*	51.1	89	9	85-137/29
95-49-8	o-Chlorotoluene	2.9 U		59.6	50.0	84	56.4	98	12	77-123/31
106-43-4	p-Chlorotoluene	2.9 U		59.6	49.8	84	57.3	100	14	78-129/29
110-75-8	2-Chloroethyl vinyl ether	15 UQ	Q	298	158	53	180	63	13	52-142/25
75-15-0	Carbon disulfide	2.9 U		59.6	40.4	68	45.3	79	11	61-142/27
56-23-5	Carbon tetrachloride	2.9 U		59.6	48.1	81	51.2	89	6	79-135/29
75-34-3	1,1-Dichloroethane	2.9 U		59.6	48.0	81	51.6	90	7	77-132/26
75-35-4	1,1-Dichloroethylene	2.9 U		59.6	43.7	73	46.8	82	7	66-132/27
563-58-6	1,1-Dichloropropene	2.9 U		59.6	48.3	81	52.8	92	9	81-133/26
96-12-8	1,2-Dibromo-3-chloropropane	2.9 U		59.6	34.2	53*	39.2	64*	14	67-129/29
106-93-4	1,2-Dibromoethane	2.9 U		59.6	34.3	58*	39.7	69*	15	77-126/24
107-06-2	1,2-Dichloroethane	2.9 U		59.6	44.4	74*	43.5	76*	2	78-129/24
78-87-5	1,2-Dichloropropane	2.9 U		59.6	48.5	81	50.6	88	4	74-127/27
142-28-9	1,3-Dichloropropane	2.9 U		59.6	36.5	61*	37.5	65*	3	78-118/26
594-20-7	2,2-Dichloropropane	2.9 U		59.6	46.6	78*	50.5	88	8	80-137/28
124-48-1	Dibromochloromethane	2.9 U		59.6	37.7	63*	38.9	68*	3	78-117/27
75-71-8	Dichlorodifluoromethane	2.9 U		59.6	82.5	138	83.4	145	1	35-162/30
156-59-2	cis-1,2-Dichloroethylene	2.9 U		59.6	50.4	85	52.4	91	4	74-123/26
10061-01-5	cis-1,3-Dichloropropene	2.9 U		59.6	47.2	79	48.2	84	2	79-130/23

Matrix Spike/Matrix Spike Duplicate Summary

Job Number: F77899
Account: TETTNOAK Tetra Tech, Inc
Project: Holloman AFB; Alamogordo, NM

Sample	File ID	DF	Analyzed	By	Prep Date	Prep Batch	Analytical Batch
F77957-2MS	H066055.D	1	11/16/10	MM	n/a	n/a	VH2461
F77957-2MSD	H066056.D	1	11/16/10	MM	n/a	n/a	VH2461
F77957-2	H066054.D	1	11/16/10	MM	n/a	n/a	VH2461

The QC reported here applies to the following samples: **Method:** SW846 8260B

F77899-1, F77899-20

CAS No.	Compound	F77957-2 ug/kg	Q	Spike ug/kg	MS ug/kg	MS %	MSD ug/kg	MSD %	RPD	Limits Rec/RPD
1476-11-5	cis-1,4-Dichloro-2-Butene	15 U		59.6	60.5	101	69.3	121	14	71-126/28
541-73-1	m-Dichlorobenzene	2.9 U		59.6	49.2	83	56.0	98	13	82-126/29
95-50-1	o-Dichlorobenzene	2.9 U		59.6	46.4	78*	52.2	91	12	83-123/28
106-46-7	p-Dichlorobenzene	2.9 U		59.6	47.9	80*	52.7	92	10	84-124/28
156-60-5	trans-1,2-Dichloroethylene	2.9 U		59.6	45.3	76*	49.6	86	9	77-129/27
10061-02-6	trans-1,3-Dichloropropene	2.9 U		59.6	41.4	69*	46.3	81*	11	87-131/27
100-41-4	Ethylbenzene	2.9 U		59.6	49.3	83	55.9	97	13	82-124/25
97-63-2	Ethyl methacrylate	15 U		59.6	43.9	74*	53.0	92	19	78-118/30
76-13-1	Freon 113	2.9 U		59.6	46.6	78	51.6	90	10	62-147/29
591-78-6	2-Hexanone	15 U		298	152	51*	165	58*	8	67-130/29
87-68-3	Hexachlorobutadiene	2.9 U		59.6	47.2	79	54.0	94	13	77-150/36
110-54-3	Hexane	2.9 U		59.6	49.8	84	49.7	87	0	65-147/27
98-82-8	Isopropylbenzene	2.9 U		59.6	54.5	91	60.2	105	10	82-133/27
99-87-6	p-Isopropyltoluene	2.9 U		59.6	52.4	88	60.4	105	14	82-132/29
108-10-1	4-Methyl-2-pentanone	15 U		298	215	72	263	92	20	69-125/24
126-98-7	Methacrylonitrile	15 U		596	582	98	560	98	4	70-138/22
74-83-9	Methyl bromide	2.9 U		59.6	67.4	113	70.3	123	4	60-146/31
74-87-3	Methyl chloride	2.9 U		59.6	67.1	113	72.4	126	8	58-163/26
74-88-4	Methyl iodide	5.9 U		59.6	45.3	76	46.9	82	3	66-128/27
80-62-6	Methyl methacrylate	2.9 U		59.6	63.0	106	166	289*	90*	73-125/24
74-95-3	Methylene bromide	2.9 U		59.6	46.7	78	46.2	81	1	75-128/26
75-09-2	Methylene chloride	4.2	JQB	59.6	55.9	87	58.9	95	5	62-140/25
78-93-3	Methyl ethyl ketone	15 U		298	142	48*	142	50*	0	66-134/23
1634-04-4	Methyl Tert Butyl Ether	2.9 U		59.6	44.3	74	44.0	77	1	70-131/25
91-20-3	Naphthalene	2.9 U		59.6	40.2	67	37.8	66	6	59-143/31
76-01-7	Pentachloroethane	15 U		59.6	59.4	100	65.5	114	10	64-156/37
107-12-0	Propionitrile	29 U		596	513	86	485	85	6	73-133/23
103-65-1	n-Propylbenzene	2.9 U		59.6	51.4	86	58.0	101	12	78-129/29
100-42-5	Styrene	2.9 U		59.6	48.7	82	53.3	93	9	79-123/28
630-20-6	1,1,1,2-Tetrachloroethane	2.9 U		59.6	47.2	79*	53.4	93	12	81-121/25
71-55-6	1,1,1-Trichloroethane	2.9 U		59.6	46.4	78*	50.2	88	8	80-133/27
79-34-5	1,1,2,2-Tetrachloroethane	2.9 U		59.6	48.4	81	56.0	98	15	70-128/30
79-00-5	1,1,2-Trichloroethane	2.9 U		59.6	66.5	112	100	174*	40*	76-118/28
87-61-6	1,2,3-Trichlorobenzene	2.9 U		59.6	44.1	74*	47.3	82	7	78-136/34
96-18-4	1,2,3-Trichloropropane	2.9 U		59.6	40.5	68*	42.1	73*	4	74-125/30
120-82-1	1,2,4-Trichlorobenzene	2.9 U		59.6	48.2	81*	49.5	86	3	82-137/32

Matrix Spike/Matrix Spike Duplicate Summary

Job Number: F77899
Account: TETTNOAK Tetra Tech, Inc
Project: Holloman AFB; Alamogordo, NM

Sample	File ID	DF	Analyzed	By	Prep Date	Prep Batch	Analytical Batch
F77957-2MS	H066055.D	1	11/16/10	MM	n/a	n/a	VH2461
F77957-2MSD	H066056.D	1	11/16/10	MM	n/a	n/a	VH2461
F77957-2	H066054.D	1	11/16/10	MM	n/a	n/a	VH2461

The QC reported here applies to the following samples: **Method:** SW846 8260B

F77899-1, F77899-20

CAS No.	Compound	F77957-2 ug/kg	Q	Spike ug/kg	MS ug/kg	MS %	MSD ug/kg	MSD %	RPD	Limits Rec/RPD
95-63-6	1,2,4-Trimethylbenzene	2.9 U		59.6	51.8	87	53.9	94	4	77-129/29
108-67-8	1,3,5-Trimethylbenzene	1.4	J	59.6	51.0	83	57.8	98	13	79-129/31
127-18-4	Tetrachloroethylene	2.9 U		59.6	47.8	80	53.5	93	11	79-132/27
108-88-3	Toluene	2.9 U		59.6	47.8	80	54.8	96	14	80-123/26
79-01-6	Trichloroethylene	2.9 U		59.6	49.3	83	52.2	91	6	78-132/28
75-69-4	Trichlorofluoromethane	2.9 U		59.6	57.1	96	63.2	110	10	67-149/29
110-57-6	Trans-1,4-Dichloro-2-Butene	15 U		59.6	37.7	63*	46.5	81	21	74-138/30
75-01-4	Vinyl chloride	2.9 U		59.6	54.1	91	58.0	101	7	60-145/29
108-05-4	Vinyl Acetate	15 U		298	216	72	188	66	14	25-164/35
	m,p-Xylene	5.9 U		119	101	85	112	98	10	82-128/25
95-47-6	o-Xylene	2.9 U		59.6	49.3	83	55.0	96	11	82-126/25

CAS No.	Surrogate Recoveries	MS	MSD	F77957-2	Limits
1868-53-7	Dibromofluoromethane	103%	95%	100%	80-121%
2037-26-5	Toluene-D8	93%	99%	83%	71-130%
460-00-4	4-Bromofluorobenzene	93%	94%	89%	59-148%
17060-07-0	1,2-Dichloroethane-D4	95%	90%	98%	77-123%

Instrument Performance Check (BFB)

Job Number: F77899
Account: TETTNOAK Tetra Tech, Inc
Project: Holloman AFB; Alamogordo, NM

Sample: VG2573-BFB
Lab File ID: G0068158.D
Instrument ID: GCMSG
Injection Date: 11/09/10
Injection Time: 09:40

m/e	Ion Abundance Criteria	Raw Abundance	% Relative Abundance		Pass/Fail
50	15.0 - 40.0% of mass 95	39822	26.0		Pass
75	30.0 - 60.0% of mass 95	86831	56.8		Pass
95	Base peak, 100% relative abundance	152911	100.0		Pass
96	5.0 - 9.0% of mass 95	10443	6.83		Pass
173	Less than 2.0% of mass 174	0	0.00	(0.00) [a]	Pass
174	50.0 - 100.0% of mass 95	127490	83.4		Pass
175	5.0 - 9.0% of mass 174	9191	6.01	(7.21) [a]	Pass
176	95.0 - 101.0% of mass 174	124881	81.7	(98.0) [a]	Pass
177	5.0 - 9.0% of mass 176	8526	5.58	(6.83) [b]	Pass

(a) Value is % of mass 174
(b) Value is % of mass 176

This check applies to the following Samples, MS, MSD, Blanks, and Standards:

Lab Sample ID	Lab File ID	Date Analyzed	Time Analyzed	Hours Lapsed	Client Sample ID
VG2573-IC2573	G0068159.D	11/09/10	09:57	00:17	Initial cal 1
VG2573-IC2573	G0068160.D	11/09/10	10:33	00:53	Initial cal 2
VG2573-IC2573	G0068161.D	11/09/10	11:06	01:26	Initial cal 3
VG2573-ICC2573	G0068162.D	11/09/10	11:32	01:52	Initial cal 4
VG2573-IC2573	G0068163.D	11/09/10	11:59	02:19	Initial cal 5
VG2573-IC2573	G0068164.D	11/09/10	12:25	02:45	Initial cal 6
VG2573-ICV2573	G0068165.D	11/09/10	12:52	03:12	Initial cal verification 3
VG2573-BS	G0068166.D	11/09/10	13:19	03:39	Blank Spike
VG2573-MB	G0068167.D	11/09/10	13:46	04:06	Method Blank
F77723-5	G0068168.D	11/09/10	14:12	04:32	(used for QC only; not part of job F77899)
F77723-5MS	G0068169.D	11/09/10	14:39	04:59	Matrix Spike
F77723-5MSD	G0068170.D	11/09/10	15:06	05:26	Matrix Spike Duplicate
ZZZZZZ	G0068171.D	11/09/10	15:32	05:52	(unrelated sample)
ZZZZZZ	G0068172.D	11/09/10	15:59	06:19	(unrelated sample)
ZZZZZZ	G0068173.D	11/09/10	16:26	06:46	(unrelated sample)
ZZZZZZ	G0068174.D	11/09/10	16:53	07:13	(unrelated sample)
ZZZZZZ	G0068175.D	11/09/10	17:19	07:39	(unrelated sample)
ZZZZZZ	G0068176.D	11/09/10	17:46	08:06	(unrelated sample)
ZZZZZZ	G0068177.D	11/09/10	18:13	08:33	(unrelated sample)
ZZZZZZ	G0068178.D	11/09/10	18:40	09:00	(unrelated sample)
ZZZZZZ	G0068179.D	11/09/10	19:07	09:27	(unrelated sample)
ZZZZZZ	G0068180.D	11/09/10	19:33	09:53	(unrelated sample)
ZZZZZZ	G0068181.D	11/09/10	20:00	10:20	(unrelated sample)
ZZZZZZ	G0068182.D	11/09/10	20:27	10:47	(unrelated sample)

Instrument Performance Check (BFB)

Job Number: F77899
Account: TETTNOAK Tetra Tech, Inc
Project: Holloman AFB; Alamogordo, NM

Sample: VG2573-BFB
Lab File ID: G0068158.D
Instrument ID: GCMSG
Injection Date: 11/09/10
Injection Time: 09:40

Lab Sample ID	Lab File ID	Date Analyzed	Time Analyzed	Hours Lapsed	Client Sample ID
ZZZZZZ	G0068183.D	11/09/10	20:53	11:13	(unrelated sample)
ZZZZZZ	G0068184.D	11/09/10	21:20	11:40	(unrelated sample)
ZZZZZZ	G0068185.D	11/09/10	21:47	12:07	(unrelated sample)

Instrument Performance Check (BFB)

Job Number: F77899
Account: TETTNOAK Tetra Tech, Inc
Project: Holloman AFB; Alamogordo, NM

Sample: VG2578-BFB
Lab File ID: G0068403.D
Instrument ID: GCMSG
Injection Date: 11/15/10
Injection Time: 09:33

m/e	Ion Abundance Criteria	Raw Abundance	% Relative Abundance		Pass/Fail
50	15.0 - 40.0% of mass 95	31156	26.9		Pass
75	30.0 - 60.0% of mass 95	69180	59.8		Pass
95	Base peak, 100% relative abundance	115712	100.0		Pass
96	5.0 - 9.0% of mass 95	7817	6.76		Pass
173	Less than 2.0% of mass 174	0	0.00	(0.00) [a]	Pass
174	50.0 - 100.0% of mass 95	96124	83.1		Pass
175	5.0 - 9.0% of mass 174	6676	5.77	(6.95) [a]	Pass
176	95.0 - 101.0% of mass 174	94013	81.2	(97.8) [a]	Pass
177	5.0 - 9.0% of mass 176	5935	5.13	(6.31) [b]	Pass

(a) Value is % of mass 174
(b) Value is % of mass 176

This check applies to the following Samples, MS, MSD, Blanks, and Standards:

Lab Sample ID	Lab File ID	Date Analyzed	Time Analyzed	Hours Lapsed	Client Sample ID
VG2578-CC2573	G0068404.D	11/15/10	09:51	00:18	Continuing cal 4
VG2578-BS	G0068405.D	11/15/10	10:45	01:12	Blank Spike
VG2578-MB	G0068406.D	11/15/10	11:11	01:38	Method Blank
F77899-2	G0068408.D	11/15/10	12:04	02:31	SS39-DPT-01B
F77899-3	G0068409.D	11/15/10	12:31	02:58	SS39-DPT-01C
F77899-3MS	G0068410.D	11/15/10	12:57	03:24	Matrix Spike
F77899-3MSD	G0068411.D	11/15/10	13:24	03:51	Matrix Spike Duplicate
F77899-4	G0068412.D	11/15/10	13:51	04:18	SS39-DPT-02A
F77899-5	G0068413.D	11/15/10	14:17	04:44	SS39-DPT-02B
F77899-6	G0068414.D	11/15/10	14:44	05:11	SS39-DPT-02C
F77899-7	G0068415.D	11/15/10	15:11	05:38	SS39-DPT-03A
F77899-8	G0068416.D	11/15/10	15:37	06:04	SS39-DPT-03B
F77899-9	G0068417.D	11/15/10	16:04	06:31	SS39-DPT-03C
F77899-10	G0068418.D	11/15/10	16:31	06:58	SS39-DPT-04A
F77899-11	G0068419.D	11/15/10	16:57	07:24	SS39-DPT-04B
F77899-12	G0068420.D	11/15/10	17:24	07:51	SS39-DPT-04C
F77899-13	G0068421.D	11/15/10	17:51	08:18	SS39-DPT-15A
F77899-14	G0068422.D	11/15/10	18:17	08:44	SS39-DPT-15B
F77899-15	G0068423.D	11/15/10	18:44	09:11	SS39-DPT-15C
F77899-16	G0068424.D	11/15/10	19:11	09:38	SS39-DPT-16A
F77899-17	G0068425.D	11/15/10	19:37	10:04	SS39-DPT-16B
F77899-18	G0068426.D	11/15/10	20:04	10:31	SS39-DPT-16C
F77899-19	G0068427.D	11/15/10	20:31	10:58	SS39-DPT-DUP04

Instrument Performance Check (BFB)

Job Number: F77899
Account: TETTNOAK Tetra Tech, Inc
Project: Holloman AFB; Alamogordo, NM

Sample: VH2460-BFB
Lab File ID: H066000.D
Instrument ID: GCMSH
Injection Date: 11/15/10
Injection Time: 11:21

m/e	Ion Abundance Criteria	Raw Abundance	% Relative Abundance		Pass/Fail
50	15.0 - 40.0% of mass 95	12095	22.5		Pass
75	30.0 - 60.0% of mass 95	26383	49.1		Pass
95	Base peak, 100% relative abundance	53739	100.0		Pass
96	5.0 - 9.0% of mass 95	3439	6.40		Pass
173	Less than 2.0% of mass 174	0	0.00	(0.00) [a]	Pass
174	50.0 - 100.0% of mass 95	37014	68.9		Pass
175	5.0 - 9.0% of mass 174	2552	4.75	(6.89) [a]	Pass
176	95.0 - 101.0% of mass 174	36051	67.1	(97.4) [a]	Pass
177	5.0 - 9.0% of mass 176	2336	4.35	(6.48) [b]	Pass

(a) Value is % of mass 174
(b) Value is % of mass 176

This check applies to the following Samples, MS, MSD, Blanks, and Standards:

Lab Sample ID	Lab File ID	Date Analyzed	Time Analyzed	Hours Lapsed	Client Sample ID
VH2460-IC2460	H066001.D	11/15/10	11:39	00:18	Initial cal 1
VH2460-IC2460	H066002.D	11/15/10	12:05	00:44	Initial cal 2
VH2460-IC2460	H066003.D	11/15/10	12:32	01:11	Initial cal 3
VH2460-ICC2460	H066004.D	11/15/10	12:58	01:37	Initial cal 4
VH2460-IC2460	H066005.D	11/15/10	13:25	02:04	Initial cal 5
VH2460-IC2460	H066006.D	11/15/10	13:52	02:31	Initial cal 6
VH2460-ICV2460	H066007.D	11/15/10	14:19	02:58	Initial cal verification 3
VH2460-BS	H066008.D	11/15/10	14:45	03:24	Blank Spike
VH2460-MB	H066009.D	11/15/10	15:12	03:51	Method Blank
F77991-3	H066010.D	11/15/10	15:39	04:18	(used for QC only; not part of job F77899)
F77991-3MS	H066011.D	11/15/10	16:06	04:45	Matrix Spike
F77991-3MSD	H066012.D	11/15/10	16:33	05:12	Matrix Spike Duplicate
ZZZZZZ	H066017.D	11/15/10	18:46	07:25	(unrelated sample)
ZZZZZZ	H066018.D	11/15/10	19:13	07:52	(unrelated sample)
ZZZZZZ	H066019.D	11/15/10	19:40	08:19	(unrelated sample)
F77899-21	H066022.D	11/15/10	21:00	09:39	SS39-TB-11082010-B
F77899-22	H066023.D	11/15/10	21:26	10:05	SS39-TB-11082010-C
ZZZZZZ	H066024.D	11/15/10	21:53	10:32	(unrelated sample)
ZZZZZZ	H066025.D	11/15/10	22:20	10:59	(unrelated sample)

Instrument Performance Check (BFB)

Job Number: F77899
Account: TETTNOAK Tetra Tech, Inc
Project: Holloman AFB; Alamogordo, NM

Sample: VH2461-BFB
Lab File ID: H066050.D
Instrument ID: GCMSH
Injection Date: 11/16/10
Injection Time: 09:25

m/e	Ion Abundance Criteria	Raw Abundance	% Relative Abundance		Pass/Fail
50	15.0 - 40.0% of mass 95	13529	23.0		Pass
75	30.0 - 60.0% of mass 95	28251	48.0		Pass
95	Base peak, 100% relative abundance	58880	100.0		Pass
96	5.0 - 9.0% of mass 95	3930	6.67		Pass
173	Less than 2.0% of mass 174	0	0.00	(0.00) [a]	Pass
174	50.0 - 100.0% of mass 95	39232	66.6		Pass
175	5.0 - 9.0% of mass 174	2811	4.77	(7.17) [a]	Pass
176	95.0 - 101.0% of mass 174	37539	63.8	(95.7) [a]	Pass
177	5.0 - 9.0% of mass 176	2441	4.15	(6.50) [b]	Pass

(a) Value is % of mass 174
(b) Value is % of mass 176

This check applies to the following Samples, MS, MSD, Blanks, and Standards:

Lab Sample ID	Lab File ID	Date Analyzed	Time Analyzed	Hours Lapsed	Client Sample ID
VH2461-CC2460	H066051.D	11/16/10	09:43	00:18	Continuing cal 4
VH2461-BS	H066052.D	11/16/10	10:25	01:00	Blank Spike
VH2461-MB	H066053.D	11/16/10	10:52	01:27	Method Blank
F77957-2	H066054.D	11/16/10	11:19	01:54	(used for QC only; not part of job F77899)
F77957-2MS	H066055.D	11/16/10	11:45	02:20	Matrix Spike
F77957-2MSD	H066056.D	11/16/10	12:12	02:47	Matrix Spike Duplicate
ZZZZZZ	H066057.D	11/16/10	12:39	03:14	(unrelated sample)
ZZZZZZ	H066058.D	11/16/10	13:05	03:40	(unrelated sample)
ZZZZZZ	H066059.D	11/16/10	13:32	04:07	(unrelated sample)
ZZZZZZ	H066060.D	11/16/10	13:59	04:34	(unrelated sample)
ZZZZZZ	H066061.D	11/16/10	14:26	05:01	(unrelated sample)
ZZZZZZ	H066062.D	11/16/10	14:52	05:27	(unrelated sample)
ZZZZZZ	H066063.D	11/16/10	15:19	05:54	(unrelated sample)
ZZZZZZ	H066064.D	11/16/10	15:46	06:21	(unrelated sample)
ZZZZZZ	H066066.D	11/16/10	16:40	07:15	(unrelated sample)
ZZZZZZ	H066067.D	11/16/10	17:06	07:41	(unrelated sample)
F77899-1	H066068.D	11/16/10	17:33	08:08	SS39-DPT-01A
F77899-20	H066069.D	11/16/10	18:00	08:35	SS39-DPT-DUP05
ZZZZZZ	H066070.D	11/16/10	18:27	09:02	(unrelated sample)
ZZZZZZ	H066071.D	11/16/10	18:53	09:28	(unrelated sample)
ZZZZZZ	H066072.D	11/16/10	19:20	09:55	(unrelated sample)
ZZZZZZ	H066073.D	11/16/10	19:47	10:22	(unrelated sample)
ZZZZZZ	H066074.D	11/16/10	20:14	10:49	(unrelated sample)

Volatile Internal Standard Area Summary

Job Number: F77899
Account: TETTNOAK Tetra Tech, Inc
Project: Holloman AFB; Alamogordo, NM

Check Std:	VG2578-CC2573	**Injection Date:**	11/15/10
Lab File ID:	G0068404.D	**Injection Time:**	09:51
Instrument ID:	GCMSG	**Method:**	SW846 8260B

	IS 1 AREA	RT	IS 2 AREA	RT	IS 3 AREA	RT	IS 4 AREA	RT
Initial Cal [a]	871781	11.08	651780	14.64	351601	16.92	106812	7.98
Check Std [b]	692763	11.07	537784	14.64	298570	16.92	92297	7.98
Upper Limit [c]	1385526	11.57	1075568	15.14	597140	17.42	184594	8.48
Lower Limit [d]	346382	10.57	268892	14.14	149285	16.42	46149	7.48

Lab Sample ID	IS 1 AREA	RT	IS 2 AREA	RT	IS 3 AREA	RT	IS 4 AREA	RT
VG2578-BS	659312	11.08	536347	14.64	284489	16.92	71835	7.99
VG2578-MB	603174	11.08	469838	14.65	203422	16.93	63196	8.01
F77899-2	565803	11.08	442350	14.65	187873	16.93	70823	8.00
F77899-3	528707	11.08	390165	14.64	171618	16.93	58815	8.00
F77899-3MS	608280	11.07	490275	14.64	254196	16.93	52428	7.99
F77899-3MSD	613343	11.08	486934	14.64	238350	16.92	47972	7.99
F77899-4	546855	11.08	422285	14.64	175887	16.93	73531	8.01
F77899-5	509057	11.08	401163	14.64	174283	16.93	78750	8.01
F77899-6	556898	11.08	398424	14.65	166147	16.92	72100	8.00
F77899-7	481100	11.08	369999	14.64	152170	16.93	51737	8.01
F77899-8	499474	11.08	380955	14.65	168525	16.93	68764	8.00
F77899-9	488711	11.08	348710	14.64	158192	16.93	58518	8.01
F77899-10	518031	11.08	397256	14.65	183096	16.92	79479	8.00
F77899-11	498695	11.08	373359	14.65	150274	16.92	55634	8.00
F77899-12	550835	11.08	419093	14.65	192202	16.93	63489	8.00
F77899-13	536407	11.08	416594	14.64	180890	16.93	56359	8.00
F77899-14	551202	11.08	454161	14.65	205186	16.92	66649	8.00
F77899-15	481520	11.08	380358	14.64	167647	16.92	71618	7.99
F77899-16	549821	11.08	439146	14.64	183971	16.92	57666	8.00
F77899-17	521019	11.08	405563	14.64	178238	16.92	70909	8.00
F77899-18	504000	11.08	402062	14.64	177644	16.92	73470	7.99
F77899-19	465818	11.08	369138	14.64	161978	16.92	63851	7.99

IS 1 = Fluorobenzene
IS 2 = Chlorobenzene-D5
IS 3 = 1,4-Dichlorobenzene-d4
IS 4 = Tert Butyl Alcohol-D10

(a) Initial Cal is: VG2573-ICC2573 G0068162.D 11/09/10 11:32
(b) Check Std Limit = -50 to + 100% of initial cal area.
(c) Upper Limit = + 100% of check standard area; Retention time + 0.5 minutes.
(d) Lower Limit = -50% of check standard area; Retention time -0.5 minutes.

Volatile Internal Standard Area Summary

Job Number: F77899
Account: TETTNOAK Tetra Tech, Inc
Project: Holloman AFB; Alamogordo, NM

Check Std:	VH2460-ICC2460	**Injection Date:**	11/15/10
Lab File ID:	H066004.D	**Injection Time:**	12:58
Instrument ID:	GCMSH	**Method:**	SW846 8260B

	IS 1 AREA	RT	IS 2 AREA	RT	IS 3 AREA	RT	IS 4 AREA	RT
Initial Cal [a]	516319	11.24	321853	14.76	196145	17.23	44961	8.04
Check Std [b]	516319	11.24	321853	14.76	196145	17.23	44961	8.04
Upper Limit [c]	1032638	11.74	643706	15.26	392290	17.73	89922	8.54
Lower Limit [d]	258160	10.74	160927	14.26	98073	16.73	22481	7.54

Lab Sample ID	IS 1 AREA	RT	IS 2 AREA	RT	IS 3 AREA	RT	IS 4 AREA	RT
VH2460-BS	542943	11.24	379294	14.76	215249	17.23	51505	8.04
VH2460-MB	556687	11.24	415013	14.77	208415	17.24	45766	8.05
F77991-3	482088	11.23	350888	14.77	149603	17.24	0*	0.00*
F77991-3MS	470674	11.24	316183	14.76	167290	17.23	23230	8.25
F77991-3MSD	268722	11.24	193284	14.77	114377	17.24	19905*	8.03
ZZZZZZ	141722*	11.25	115637*	14.78	78085*	17.24	15836*	8.06
ZZZZZZ	422328	11.24	343946	14.77	211586	17.24	48384	8.09
ZZZZZZ	467007	11.25	367479	14.77	222639	17.23	37278	8.08
F77899-21	443148	11.24	370896	14.76	232378	17.24	41866	8.07
F77899-22	458111	11.24	374548	14.77	241845	17.24	40083	8.10
ZZZZZZ	242824*	11.25	189242	14.77	93248*	17.24	21168*	8.04
ZZZZZZ	452991	11.25	385300	14.77	247090	17.23	42048	8.08

IS 1 = Fluorobenzene
IS 2 = Chlorobenzene-D5
IS 3 = 1,4-Dichlorobenzene-d4
IS 4 = Tert Butyl Alcohol-D10

(a) Initial Cal is: VH2460-ICC2460 H066004.D 11/15/10 12:58
(b) Check Std Limit = -50 to + 100% of initial cal area.
(c) Upper Limit = + 100% of check standard area; Retention time + 0.5 minutes.
(d) Lower Limit = -50% of check standard area; Retention time -0.5 minutes.

Volatile Internal Standard Area Summary

Job Number: F77899
Account: TETTNOAK Tetra Tech, Inc
Project: Holloman AFB; Alamogordo, NM

Check Std:	VH2461-CC2460	**Injection Date:**	11/16/10
Lab File ID:	H066051.D	**Injection Time:**	09:43
Instrument ID:	GCMSH	**Method:**	SW846 8260B

	IS 1 AREA	RT	IS 2 AREA	RT	IS 3 AREA	RT	IS 4 AREA	RT
Initial Cal [a]	516319	11.24	321853	14.76	196145	17.23	44961	8.04
Check Std [b]	499033	11.24	297288	14.76	180188	17.23	41752	8.03
Upper Limit [c]	998066	11.74	594576	15.26	360376	17.73	83504	8.53
Lower Limit [d]	249517	10.74	148644	14.26	90094	16.73	20876	7.53

Lab Sample ID	IS 1 AREA	RT	IS 2 AREA	RT	IS 3 AREA	RT	IS 4 AREA	RT
VH2461-BS	441186	11.24	314186	14.76	176902	17.23	44016	8.03
VH2461-MB	456739	11.24	350445	14.77	187957	17.24	40129	8.07
F77957-2	495649	11.24	371850	14.77	204236	17.24	30612	8.05
F77957-2MS	469705	11.24	324212	14.76	186384	17.23	29531	8.03
F77957-2MSD	492712	11.25	307563	14.76	174043	17.23	28100	8.04
ZZZZZZ	529310	11.24	354089	14.77	192556	17.24	51361	8.05
ZZZZZZ	560180	11.25	416513	14.77	211616	17.24	47480	8.06
ZZZZZZ	308581	11.25	236663	14.77	123498	17.24	30351	8.06
ZZZZZZ	314530	11.25	212460	14.77	83092*	17.24	9700*	8.25
ZZZZZZ	302825	11.26	228053	14.77	121408	17.24	32146	8.07
ZZZZZZ	504585	11.25	375722	14.77	196399	17.24	39710	8.05
ZZZZZZ	240918*	11.25	184592	14.78	96936	17.25	16390*	8.08
ZZZZZZ	434342	11.25	329957	14.77	189119	17.24	55107	8.06
ZZZZZZ	500184	11.25	361739	14.77	174235	17.24	36377	8.08
ZZZZZZ	501373	11.25	390309	14.77	209158	17.24	33230	8.07
F77899-1	504881	11.24	402637	14.77	216069	17.24	41083	8.10
F77899-20	542560	11.25	423197	14.77	237041	17.24	49234	8.09
ZZZZZZ	489140	11.25	357822	14.77	157281	17.24	34504	8.07
ZZZZZZ	474911	11.24	384671	14.77	224190	17.24	42905	8.06
ZZZZZZ	467280	11.24	373943	14.77	215193	17.24	50268	8.08
ZZZZZZ	485329	11.24	392018	14.77	234268	17.23	51314	8.07
ZZZZZZ	468564	11.24	370093	14.76	221501	17.24	39739	8.07

IS 1 = Fluorobenzene
IS 2 = Chlorobenzene-D5
IS 3 = 1,4-Dichlorobenzene-d4
IS 4 = Tert Butyl Alcohol-D10

(a) Initial Cal is: VH2460-ICC2460 H066004.D 11/15/10 12:58
(b) Check Std Limit = -50 to + 100% of initial cal area.
(c) Upper Limit = + 100% of check standard area; Retention time + 0.5 minutes.
(d) Lower Limit = -50% of check standard area; Retention time -0.5 minutes.

Volatile Surrogate Recovery Summary

Job Number: F77899
Account: TETTNOAK Tetra Tech, Inc
Project: Holloman AFB; Alamogordo, NM

Method: SW846 8260B **Matrix:** SO

Samples and QC shown here apply to the above method

Lab Sample ID	Lab File ID	S1	S2	S3	S4
F77899-1	H066068.D	107.0	78.0	99.0	107.0
F77899-2	G0068408.D	112.0	91.0	100.0	107.0
F77899-3	G0068409.D	108.0	95.0	98.0	107.0
F77899-4	G0068412.D	108.0	93.0	102.0	109.0
F77899-5	G0068413.D	117.0	92.0	99.0	116.0
F77899-6	G0068414.D	114.0	98.0	101.0	108.0
F77899-7	G0068415.D	112.0	93.0	98.0	105.0
F77899-8	G0068416.D	115.0	93.0	96.0	111.0
F77899-9	G0068417.D	109.0	100.0	93.0	108.0
F77899-10	G0068418.D	111.0	96.0	94.0	111.0
F77899-11	G0068419.D	113.0	95.0	100.0	107.0
F77899-12	G0068420.D	116.0	94.0	89.0	120.0
F77899-13	G0068421.D	113.0	95.0	92.0	112.0
F77899-14	G0068422.D	113.0	90.0	89.0	118.0
F77899-15	G0068423.D	112.0	94.0	93.0	116.0
F77899-16	G0068424.D	109.0	93.0	98.0	111.0
F77899-17	G0068425.D	110.0	96.0	91.0	113.0
F77899-18	G0068426.D	118.0	94.0	94.0	117.0
F77899-19	G0068427.D	119.0	92.0	93.0	111.0
F77899-20	H066069.D	102.0	77.0	98.0	104.0
F77899-21	H066022.D	121.0	76.0	105.0	119.0
F77899-22	H066023.D	116.0	76.0	102.0	115.0
F77899-3MS	G0068410.D	104.0	96.0	94.0	93.0
F77899-3MSD	G0068411.D	106.0	94.0	97.0	101.0
F77957-2MS	H066055.D	103.0	93.0	93.0	95.0
F77957-2MSD	H066056.D	95.0	99.0	94.0	90.0
F77991-3MS	H066011.D	98.0	93.0	105.0	92.0
F77991-3MSD	H066012.D	104.0	89.0	97.0	112.0
VG2578-BS	G0068405.D	105.0	93.0	94.0	114.0
VG2578-MB	G0068406.D	110.0	90.0	100.0	106.0
VH2460-BS	H066008.D	100.0	92.0	93.0	94.0
VH2460-MB	H066009.D	100.0	82.0	94.0	98.0
VH2461-BS	H066052.D	102.0	87.0	96.0	106.0
VH2461-MB	H066053.D	105.0	81.0	91.0	99.0

Surrogate Compounds	Recovery Limits
S1 = Dibromofluoromethane	80-121%
S2 = Toluene-D8	71-130%

Volatile Surrogate Recovery Summary

Job Number: F77899
Account: TETTNOAK Tetra Tech, Inc
Project: Holloman AFB; Alamogordo, NM

Method: SW846 8260B **Matrix:** SO

Samples and QC shown here apply to the above method

Surrogate Compounds	Recovery Limits
S3 = 4-Bromofluorobenzene	59-148%
S4 = 1,2-Dichloroethane-D4	77-123%

Initial Calibration Summary

Job Number: F77899
Account: TETTNOAK Tetra Tech, Inc
Project: Holloman AFB; Alamogordo, NM

Sample: VG2573-ICC2573
Lab FileID: G0068162.D

Response Factor Report MSVOA1

Method : C:\MSDCHEM\1\METHODS\APP9-G.M (RTE Integrator)
Title : SW-846 Method 5035A/8260B
Last Update : Tue Nov 09 13:05:46 2010
Response via : Initial Calibration

Calibration Files
1 =G0068159.D 2 =G0068160.D 3 =G0068161.D 4 =G0068162.D
5 =G0068163.D 6 =G0068164.D

		Compound	1	2	3	4	5	6	Avg	%RSD
1)	I	Fluorobenzene	----------ISTD----------							
2)		Dichlorodifluoromet	0.517	0.513	0.519	0.562	0.425	0.593	0.522	10.90
3)	P	Chloromethane	0.610	0.617	0.592	0.643	0.605	0.663	0.622	4.25
4)	C	Vinyl Chloride	0.424	0.457	0.469	0.545	0.485	0.532	0.485	9.44
5)		Bromomethane	0.236	0.187	0.141	0.132	0.115	0.118	0.155	30.64
		---- Linear regr., Force(0,0) ---- Coefficient = 0.9953								
		Response Ratio = 0.00000 + 0.12006 *A								
6)		Chloroethane	0.230	0.170	0.154	0.158	0.129	0.139	0.163	21.93
		---- Linear regr., Force(0,0) ---- Coefficient = 0.9908								
		Response Ratio = 0.00000 + 0.13926 *A								
7)		Trichlorofluorometh	0.540	0.496	0.450	0.486	0.412	0.474	0.476	9.10
8)		Ethyl Ether	0.251	0.260	0.254	0.252	0.241	0.253	0.252	2.43
9)		1,2-Dichlorotrifluo	0.503	0.482	0.451	0.524	0.470	0.517	0.491	5.74
10)	C	1,1-Dichloroethene	0.724	0.726	0.700	0.806	0.716	0.788	0.743	5.79
11)		Freon 113	0.353	0.354	0.338	0.394	0.338	0.385	0.360	6.60
12)		Carbon Disulfide	0.921	0.975	0.995	1.141	1.013	1.146	1.032	8.89
13)		Iodomethane	0.691	0.722	0.720	0.816	0.727	0.781	0.743	6.24
14)		Allyl chloride	0.605	0.638	0.656	0.784	0.720	0.790	0.699	11.17
15)		Methylene Chloride	0.894	0.728	0.695	0.790	0.695	0.734	0.756	10.06
16)		Acetone	0.293	0.328	0.336	0.298	0.283	0.267	0.301	8.86
17)		Methyl acetate	0.259	0.311	0.333	0.326	0.286	0.280	0.299	9.60
18)		trans-1,2-Dichloroe	0.740	0.701	0.729	0.827	0.745	0.785	0.754	5.93
19)		Hexane	0.287	0.319	0.299	0.375	0.341	0.358	0.330	10.39
20)		Methyl Tert Butyl E	1.217	1.274	1.297	1.300	1.219	1.179	1.248	3.99
21)		Acetonitrile	0.037	0.039	0.045	0.043	0.042	0.040	0.041	6.84
22)		Di-isopropyl ether	1.474	1.665	1.681	1.956	1.803	1.865	1.741	9.83
23)		Chloroprene	0.719	0.726	0.750	0.924	0.790	0.856	0.794	10.22
24)	P	1,1-Dichloroethane	0.840	0.881	0.884	1.013	0.902	0.941	0.910	6.62
25)		Acrylonitrile	0.122	0.168	0.177	0.166	0.165	0.156	0.159	12.10
26)		ETBE	1.437	1.567	1.625	1.744	1.594	1.571	1.590	6.23
27)		Vinyl acetate	0.946	1.152	1.212	1.171	1.135	1.081	1.116	8.42
28)		cis-1,2-Dichloroeth	0.396	0.408	0.411	0.467	0.423	0.444	0.425	6.18
29)		2,2-Dichloropropane	0.454	0.483	0.456	0.538	0.457	0.471	0.477	6.77
30)		Bromochloromethane	0.257	0.258	0.252	0.278	0.254	0.249	0.258	3.98
31)		Cyclohexane	0.640	0.662	0.661	0.794	0.701	0.746	0.701	8.42
32)	C	Chloroform	0.889	0.897	0.903	1.022	0.923	0.927	0.927	5.29
33)		Ethyl acetate	0.482	0.603	0.636	0.594	0.568	0.529	0.569	9.74
34)		Tetrahydrofuran	0.191	0.154	0.147	0.135	0.130	0.116	0.146	17.79
		---- Linear regr., Force(0,0) ---- Coefficient = 0.9908								
		Response Ratio = 0.00000 + 0.12424 *A								
35)	S	Dibromofluoromethan	0.354	0.341	0.371	0.340	0.330	0.322	0.343	5.11
36)		Carbon Tetrachlorid	0.677	0.720	0.694	0.804	0.723	0.745	0.727	6.12
37)		1,1,1-Trichloroetha	0.636	0.705	0.652	0.768	0.677	0.703	0.690	6.81

Initial Calibration Summary

Job Number: F77899
Account: TETTNOAK Tetra Tech, Inc
Project: Holloman AFB; Alamogordo, NM

Sample: VG2573-ICC2573
Lab FileID: G0068162.D

38)		2-Butanone	0.245	0.304	0.321	0.292	0.283	0.262	0.284	9.73
39)		1,1-Dichloropropene	0.563	0.614	0.601	0.702	0.618	0.655	0.625	7.64
40)		Propionitrile	0.045	0.056	0.055	0.049	0.046	0.043	0.049	11.17
41)		Methacrylonitrile	0.290	0.348	0.352	0.331	0.302	0.283	0.318	9.46
42)		Benzene	1.449	1.501	1.459	1.661	1.462	1.493	1.504	5.29
43)		TAME	1.110	1.215	1.207	1.261	1.130	1.090	1.169	5.82
44)	S	1,2-Dichloroethane-	0.463	0.457	0.487	0.406	0.401	0.383	0.433	9.59
45)		1,2-Dichloroethane	0.738	0.812	0.843	0.883	0.784	0.790	0.808	6.25
46)		Trichloroethene	0.406	0.445	0.442	0.498	0.444	0.460	0.449	6.69
47)		Methylcyclohexane	0.500	0.568	0.545	0.659	0.574	0.625	0.579	9.82
48)		Dibromomethane	0.275	0.313	0.320	0.353	0.318	0.329	0.318	7.93
49)	C	1,2-Dichloropropane	0.406	0.455	0.453	0.517	0.476	0.510	0.469	8.78
50)		Bromodichloromethan	0.600	0.680	0.678	0.782	0.706	0.741	0.698	8.91
51)		Methyl methacrylate	0.283	0.414	0.474	0.465	0.432	0.435	0.417	16.59
		---- Linear regr., Force(0,0) ---- Coefficient = 0.9979								
		Response Ratio = 0.00000 + 0.43906 *A								
52)		2-Chloroethyl vinyl	0.120	0.168	0.173	0.186	0.175	0.178	0.167	14.21
53)		cis-1,3-Dichloropro	0.573	0.719	0.707	0.816	0.750	0.788	0.726	11.77
54)	I	Chlorobenzene-d5	----------ISTD----------							
55)	S	Toluene-d8	1.280	1.315	1.335	1.438	1.515	1.625	1.418	9.41
56)	C	Toluene	1.723	2.039	1.953	2.406	2.274	2.528	2.154	14.04
57)		2-Nitropropane	0.135	0.205	0.224	0.232	0.233	0.239	0.211	18.67
		---- Linear regr., Force(0,0) ---- Coefficient = 0.9997								
		Response Ratio = 0.00000 + 0.23593 *A								
58)		4-Methyl-2-pentanon	0.445	0.616	0.642	0.650	0.671	0.666	0.615	13.91
59)		trans-1,3-Dichlorop	0.581	0.746	0.789	0.909	0.888	0.945	0.810	16.63
		---- Linear regr., Force(0,0) ---- Coefficient = 0.9979								
		Response Ratio = 0.00000 + 0.91657 *A								
60)		Tetrachloroethene	0.564	0.597	0.591	0.710	0.636	0.710	0.635	9.90
61)		Ethyl methacrylate	0.490	0.624	0.635	0.712	0.714	0.739	0.652	14.11
62)		1,1,2-Trichloroetha	0.397	0.407	0.394	0.448	0.439	0.462	0.424	6.79
63)		Dibromochloromethan	0.514	0.635	0.659	0.766	0.734	0.780	0.681	14.73
64)		1,3-Dichloropropane	0.752	0.786	0.822	0.919	0.875	0.930	0.847	8.58
65)		1,2-Dibromoethane	0.407	0.497	0.507	0.606	0.569	0.604	0.532	14.44
66)		2-hexanone	0.352	0.481	0.532	0.525	0.551	0.538	0.497	15.01
		---- Linear regr., Force(0,0) ---- Coefficient = 0.9995								
		Response Ratio = 0.00000 + 0.53971 *A								
67)		1-Chlorohexane	0.487	0.631	0.657	0.830	0.771	0.859	0.706	19.93
		---- Linear regr., Force(0,0) ---- Coefficient = 0.9940								
		Response Ratio = 0.00000 + 0.82105 *A								
68)	C	Ethylbenzene	1.725	2.213	2.180	2.667	2.394	2.570	2.291	14.72
69)	P	Chlorobenzene	1.080	1.257	1.216	1.477	1.321	1.377	1.288	10.64
70)		1,1,1,2-Tetrachloro	0.435	0.546	0.528	0.628	0.577	0.591	0.551	12.12
71)		m,p-Xylene	1.545	1.837	1.750	2.032	1.754	1.791	1.785	8.81
72)		o-Xylene	1.604	1.927	1.920	2.311	2.142	2.280	2.030	13.18
73)		Styrene	0.991	1.235	1.271	1.552	1.441	1.525	1.336	15.94
		---- Linear regr., Force(0,0) ---- Coefficient = 0.9971								
		Response Ratio = 0.00000 + 1.49321 *A								
74)	P	Bromoform	0.349	0.419	0.468	0.525	0.500	0.519	0.463	14.72
75)		Isopropylbenzene	1.419	1.767	1.755	2.180	1.936	2.089	1.858	14.73
76)	I	1,4-Dichlorobenzene-d	----------ISTD----------							
77)	S	4-Bromofluorobenzen	0.936	0.929	0.954	1.018	1.065	1.100	1.001	7.18

Initial Calibration Summary

Job Number: F77899
Account: TETTNOAK Tetra Tech, Inc
Project: Holloman AFB; Alamogordo, NM

Sample: VG2573-ICC2573
Lab FileID: G0068162.D

```
 78)     cis-1,4-Dichloro-2- 0.319 0.426 0.414 0.491 0.477 0.515 0.441  16.10
             ---- Linear regr., Force(0,0) ----  Coefficient =  0.9968
               Response Ratio = 0.00000 + 0.49673 *A

 79)     n-Propylbenzene     3.956 4.679 4.411 5.562 5.298 5.535 4.907  13.45
 80)     Bromobenzene        1.053 1.180 1.079 1.296 1.206 1.241 1.176   7.97
 81) P   1,1,2,2-Tetrachloro 0.919 1.111 1.031 1.093 1.088 1.068 1.052   6.72
 82)     1,3,5-Trimethylbenz 2.788 3.406 3.190 3.833 3.524 3.612 3.392  10.76
 83)     2-Chlorotoluene     3.285 3.473 3.310 3.910 3.600 3.671 3.541   6.69
 84)     trans-1,4-Dichloro- 0.255 0.330 0.321 0.382 0.366 0.359 0.336  13.58
 85)     1,2,3-Trichloroprop 0.236 0.281 0.275 0.283 0.271 0.265 0.268   6.38
 86)     Cyclohexanone       0.030 0.045 0.040 0.040 0.043 0.039 0.039  12.77
 87)     4-Chlorotoluene     2.717 2.848 2.815 3.412 3.229 3.319 3.057   9.73
 88)     tert-Butylbenzene   2.247 2.345 2.113 2.617 2.379 2.413 2.352   7.20
 89)     1,2,4-Trimethylbenz 2.845 3.232 3.013 3.418 3.133 3.145 3.131   6.20
 90)     Pentachloroethane   0.710 0.700 0.664 0.751 0.630 0.622 0.679   7.35
 91)     sec-Butylbenzene    3.290 3.960 3.548 4.306 3.949 4.015 3.845   9.46
 92)     4-Isopropyltoluene  2.350 3.034 2.777 3.360 3.087 3.115 2.954  11.83
 93)     1,3-Dichlorobenzene 1.633 1.813 1.744 2.037 1.930 1.992 1.858   8.38
 94)     1,4-Dichlorobenzene 1.647 1.747 1.688 1.954 1.880 1.914 1.805   7.08
 95)     n-Butylbenzene      1.172 1.642 1.582 1.905 1.890 1.958 1.692  17.54
             ---- Linear regr., Force(0,0) ----  Coefficient =  0.9984
               Response Ratio = 0.00000 + 1.91654 *A

 96)     Benzyl Chloride     0.230 0.300 0.293 0.325 0.326 0.331 0.301  12.60
 97)     1,2-Dichlorobenzene 1.513 1.694 1.623 1.922 1.845 1.926 1.754   9.70
 98)     1,2-Dibromo-3-Chlor 0.185 0.199 0.201 0.208 0.233 0.233 0.210   9.25
 99)     Hexachlorobutadiene 0.485 0.716 0.705 0.800 0.885 0.940 0.755  21.38
             ---- Linear regr., Force(0,0) ----  Coefficient =  0.9944
               Response Ratio = 0.00000 + 0.89602 *A

100)     1,2,4-Trichlorobenz 0.483 0.859 0.939 1.032 1.172 1.183 0.944  27.48
             ---- Linear regr., Force(0,0) ----  Coefficient =  0.9964
               Response Ratio = 0.00000 + 1.14966 *A

101)     Naphthalene         0.739 1.507 1.676 1.789 2.016 1.888 1.602  28.56
             ---- Linear regr., Force(0,0) ----  Coefficient =  0.9963
               Response Ratio = 0.00000 + 1.90331 *A

102)     1,2,3-Trichlorobenz 0.375 0.722 0.786 0.815 0.920 0.858 0.746  25.95
             ---- Linear regr., Force(0,0) ----  Coefficient =  0.9961
               Response Ratio = 0.00000 + 0.86726 *A


103) I   Tert Butyl Alcohol-d1 ----------------ISTD---------------------
104)     Ethanol             0.240 0.197 0.212 0.184 0.171 0.173 0.196  13.33
105)     Acrolein            1.101 1.021 1.172 1.409 1.182 1.104 1.165  11.42
106)     Tert Butyl Alcohol  1.817 1.571 1.787 1.919 1.775 1.633 1.750   7.25
107)     Isobutyl alcohol    0.234 0.371 0.412 0.494 0.457 0.415 0.397  22.76
             ---- Quadratic regr., Force(0,0) ----  Coefficient =  0.9955
               Response Ratio = 0.00000 + 0.51311 *A + -0.00570 *A^2

108)     Tert Amyl Alcohol   1.103 1.122 1.263 1.433 1.298 1.211 1.238   9.86
109)     1,4-Dioxane         0.160 0.144 0.147 0.171 0.138 0.140 0.150   8.39
 ---------------------------------------------------------------------------
 (#) = Out of Range

           APP9-G.M          Tue Nov 09 15:10:09 2010
```

Initial Calibration Verification

Job Number: F77899
Account: TETTNOAK Tetra Tech, Inc
Project: Holloman AFB; Alamogordo, NM

Sample: VG2573-ICV2573
Lab FileID: G0068165.D

Evaluate Continuing Calibration Report

```
Data File : G:\HPCHEM\1\DATA\110910\G0068165.D          Vial: 7
Acq On    :  9 Nov 2010  12:52 pm                    Operator: MikeM
Sample    : icv2573-3                                Inst    : MSVOA1
Misc      : ms15786,vg2573,5.00,,,,,                 Multiplr: 1.00
MS Integration Params: small.p

Method       : C:\MSDCHEM\1\METHODS\APP9-G.M (RTE Integrator)
Title        : SW-846 Method 5035A/8260B
Last Update  : Tue Nov 09 13:05:46 2010
Response via : Multiple Level Calibration

Min. RRF     :   0.001  Min. Rel. Area :  50%  Max. R.T. Dev  0.50min
Max. RRF Dev :  20%     Max. Rel. Area : 200%
```

		Compound	AvgRF	CCRF	%Dev	Area%	Dev(min)	R.T.
1	I	Fluorobenzene	1.000	1.000	0.0	101	0.00	11.08
2		Dichlorodifluoromethane	0.522	0.532	-1.9	103	0.00	4.23
3	P	Chloromethane	0.622	0.653	-5.0	111	0.00	4.62
4	C	Vinyl Chloride	0.485	0.497	-2.5	107	0.00	4.81
		----------	Amount	Calc.	%Drift		----------	
5		Bromomethane	50.000	74.715	-49.4#	128	0.00	5.44
6		Chloroethane	50.000	67.730	-35.5#	124	0.01	5.71
		----------	AvgRF	CCRF	%Dev		----------	
7		Trichlorofluoromethane	0.476	0.485	-1.9	109	0.00	5.96
8		Ethyl Ether	0.252	0.278	-10.3	110	0.00	6.41
9		1,2-Dichlorotrifluoroetha	0.491	0.583	-18.7	130	0.00	6.75
10	C	1,1-Dichloroethene	0.743	0.754	-1.5	109	0.01	6.82
11		Freon 113	0.360	0.422	-17.2	126	0.00	6.85
12		Carbon Disulfide	1.032	1.180	-14.3	120	0.01	6.93
13		Iodomethane	0.743	0.844	-13.6	118	0.00	7.09
14		Allyl chloride	0.699	0.727	-4.0	112	0.00	7.50
15		Methylene Chloride	0.756	0.761	-0.7	110	0.00	7.71
16		Acetone	0.301	0.170	43.5#	51	0.01	7.73
17		Methyl acetate	0.299	0.327	-9.4	99	0.00	7.88
18		trans-1,2-Dichloroethene	0.754	0.814	-8.0	113	0.00	7.91
19		Hexane	0.330	0.445	-34.8#	150	0.00	7.99
20		Methyl Tert Butyl Ether	1.248	1.351	-8.3	105	0.00	8.02
21		Acetonitrile	0.041	0.039	4.9	89	0.01	8.42
22		Di-isopropyl ether	1.741	2.034	-16.8	122	0.00	8.51
23		Chloroprene	0.794	0.850	-7.1	114	0.00	8.73
24	P	1,1-Dichloroethane	0.910	0.971	-6.7	111	0.00	8.77
25		Acrylonitrile	0.159	0.202	-27.0#	115	0.00	8.83
26		ETBE	1.590	1.708	-7.4	106	0.00	9.00
27		Vinyl acetate	1.116	1.502	-34.6#	125	0.00	9.04
28		cis-1,2-Dichloroethene	0.425	0.473	-11.3	116	0.01	9.50
29		2,2-Dichloropropane	0.477	0.475	0.4	105	0.00	9.65
30		Bromochloromethane	0.258	0.264	-2.3	105	0.00	9.77
31		Cyclohexane	0.701	0.802	-14.4	122	0.00	9.80
32	C	Chloroform	0.927	1.019	-9.9	114	0.00	9.82
33		Ethyl acetate	0.569	0.383	32.7#	61	0.00	9.91
		----------	Amount	Calc.	%Drift		----------	
34		Tetrahydrofuran	50.000	58.722	-17.4	100	0.00	10.05
		----------	AvgRF	CCRF	%Dev		----------	

Initial Calibration Verification

Job Number: F77899
Account: TETTNOAK Tetra Tech, Inc
Project: Holloman AFB; Alamogordo, NM

Sample: VG2573-ICV2573
Lab FileID: G0068165.D

35	S	Dibromofluoromethane	0.343	0.352	-2.6	96	0.00	10.06
36		Carbon Tetrachloride	0.727	0.749	-3.0	109	0.00	10.05
37		1,1,1-Trichloroethane	0.690	0.699	-1.3	108	0.00	10.13
38		2-Butanone	0.284	0.225	20.8#	71	0.00	10.19
39		1,1-Dichloropropene	0.625	0.693	-10.9	116	0.00	10.28
40		Propionitrile	0.049	0.049	0.0	91	0.00	10.60
41		Methacrylonitrile	0.318	0.345	-8.5	99	0.00	10.62
42		Benzene	1.504	1.671	-11.1	115	0.00	10.59
43		TAME	1.169	1.327	-13.5	111	0.00	10.65
44	S	1,2-Dichloroethane-d4	0.433	0.457	-5.5	95	0.00	10.75
45		1,2-Dichloroethane	0.808	0.886	-9.7	106	0.00	10.83
46		Trichloroethene	0.449	0.517	-15.1	118	0.01	11.29
47		Methylcyclohexane	0.579	0.712	-23.0#	132	0.00	11.30
48		Dibromomethane	0.318	0.358	-12.6	113	0.01	11.81
49	C	1,2-Dichloropropane	0.469	0.535	-14.1	119	0.00	11.91
50		Bromodichloromethane	0.698	0.773	-10.7	115	0.00	11.95
		----------	Amount	Calc.	%Drift		----------	
51		Methyl methacrylate	50.000	57.767	-15.5	108	0.00	12.04
		----------	AvgRF	CCRF	%Dev		----------	
52		2-Chloroethyl vinyl ether	0.167	0.193	-15.6	113	0.00	12.54
53		cis-1,3-Dichloropropene	0.726	0.839	-15.6	120	0.01	12.67
54	I	Chlorobenzene-d5	1.000	1.000	0.0	97	0.00	14.64
55	S	Toluene-d8	1.418	1.421	-0.2	103	0.00	12.88
56	C	Toluene	2.154	2.315	-7.5	115	0.00	12.94
		----------	Amount	Calc.	%Drift		----------	
57		2-Nitropropane	250.000	232.082	7.2	95	0.00	13.21
		----------	AvgRF	CCRF	%Dev		----------	
58		4-Methyl-2-pentanone	0.615	0.649	-5.5	98	0.00	13.32
		----------	Amount	Calc.	%Drift		----------	
59		trans-1,3-Dichloropropene	50.000	51.580	-3.2	116	0.00	13.38
		----------	AvgRF	CCRF	%Dev		----------	
60		Tetrachloroethene	0.635	0.737	-16.1	121	0.01	13.41
61		Ethyl methacrylate	0.652	0.690	-5.8	106	0.00	13.47
62		1,1,2-Trichloroethane	0.424	0.461	-8.7	114	0.00	13.58
63		Dibromochloromethane	0.681	0.709	-4.1	104	0.00	13.81
64		1,3-Dichloropropane	0.847	0.892	-5.3	105	0.00	13.91
65		1,2-Dibromoethane	0.532	0.541	-1.7	104	0.01	14.12
		----------	Amount	Calc.	%Drift		----------	
66		2-hexanone	250.000	201.033	19.6	79	0.00	14.23
67		1-Chlorohexane	50.000	45.011	10.0	109	0.00	14.56
		----------	AvgRF	CCRF	%Dev		----------	
68	C	Ethylbenzene	2.291	2.468	-7.7	110	0.00	14.64
69	P	Chlorobenzene	1.288	1.407	-9.2	112	0.00	14.66
70		1,1,1,2-Tetrachloroethane	0.551	0.574	-4.2	106	0.00	14.71
71		m,p-Xylene	1.785	1.996	-11.8	111	0.00	14.78
72		o-Xylene	2.030	2.238	-10.2	113	0.01	15.27
		----------	Amount	Calc.	%Drift		----------	
73		Styrene	50.000	50.269	-0.5	115	0.00	15.31
		----------	AvgRF	CCRF	%Dev		----------	

Initial Calibration Verification

Job Number: F77899
Account: TETTNOAK Tetra Tech, Inc
Project: Holloman AFB; Alamogordo, NM

Sample: VG2573-ICV2573
Lab FileID: G0068165.D

74	P	Bromoform	0.463	0.494	-6.7	103	0.00	15.39
75		Isopropylbenzene	1.858	2.264	-21.9#	125	0.00	15.56
76	I	1,4-Dichlorobenzene-d4	1.000	1.000	0.0	87	0.00	16.92
77	S	4-Bromofluorobenzene	1.001	0.982	1.9	90	0.00	15.89
		----------	Amount	Calc.	%Drift	----------		
78		cis-1,4-Dichloro-2-butene	50.000	50.569	-1.1	106	0.00	15.91
		----------	AvgRF	CCRF	%Dev	----------		
79		n-Propylbenzene	4.907	5.706	-16.3	113	0.01	15.96
80		Bromobenzene	1.176	1.333	-13.4	108	0.00	16.01
81	P	1,1,2,2-Tetrachloroethane	1.052	1.188	-12.9	100	0.00	16.02
82		1,3,5-Trimethylbenzene	3.392	3.928	-15.8	107	0.00	16.12
83		2-Chlorotoluene	3.541	4.095	-15.6	108	0.00	16.16
84		trans-1,4-Dichloro-2-Bute	0.336	0.368	-9.5	100	0.00	16.19
85		1,2,3-Trichloropropane	0.268	0.292	-9.0	93	0.00	16.19
86		Cyclohexanone	0.039	0.052	-33.3#	115	0.00	16.27
87		4-Chlorotoluene	3.057	3.600	-17.8	111	0.00	16.31
88		tert-Butylbenzene	2.352	2.688	-14.3	111	0.00	16.44
89		1,2,4-Trimethylbenzene	3.131	3.773	-20.5#	109	0.00	16.50
90		Pentachloroethane	0.679	0.737	-8.5	97	0.00	16.51
91		sec-Butylbenzene	3.845	4.602	-19.7	113	0.00	16.60
92		4-Isopropyltoluene	2.954	3.529	-19.5	111	0.00	16.70
93		1,3-Dichlorobenzene	1.858	2.146	-15.5	107	0.00	16.86
94		1,4-Dichlorobenzene	1.805	2.063	-14.3	106	0.00	16.94
		----------	Amount	Calc.	%Drift	----------		
95		n-Butylbenzene	50.000	52.257	-4.5	110	0.00	17.10
		----------	AvgRF	CCRF	%Dev	----------		
96		Benzyl Chloride	0.301	0.312	-3.7	93	0.01	17.15
97		1,2-Dichlorobenzene	1.754	1.977	-12.7	106	0.00	17.33
98		1,2-Dibromo-3-Chloropropa	0.210	0.225	-7.1	97	0.00	18.07
		----------	Amount	Calc.	%Drift	----------		
99		Hexachlorobutadiene	50.000	51.376	-2.8	114	0.00	18.63
100		1,2,4-Trichlorobenzene	50.000	49.812	0.4	106	0.01	18.72
101		Naphthalene	50.000	47.511	5.0	94	0.00	19.06
102		1,2,3-Trichlorobenzene	50.000	50.962	-1.9	98	0.00	19.26
		----------	AvgRF	CCRF	%Dev	----------		
103	I	Tert Butyl Alcohol-d10	1.000	1.000	0.0	89	0.01	8.00
104		Ethanol	0.196	0.195	0.5	82	0.00	6.63
105		Acrolein	1.165	1.627	-39.7#	123	0.00	7.31
106		Tert Butyl Alcohol	1.750	1.632	6.7	81	0.00	8.09
		----------	Amount	Calc.	%Drift	----------		
107		Isobutyl alcohol	1000.000	907.724	9.2	96	0.01	10.69
		----------	AvgRF	CCRF	%Dev	----------		
108		Tert Amyl Alcohol	1.238	1.328	-7.3	93	0.00	10.83
109		1,4-Dioxane	0.150	0.153	-2.0	92	0.01	12.17

(#) = Out of Range SPCC's out = 0 CCC's out = 0
G0068161.D APP9-G.M Wed Nov 10 14:32:43 2010

Continuing Calibration Summary

Job Number: F77899
Account: TETTNOAK Tetra Tech, Inc
Project: Holloman AFB; Alamogordo, NM

Sample: VG2578-CC2573
Lab FileID: G0068404.D

Evaluate Continuing Calibration Report

```
Data File : G:\HPCHEM\1\DATA\111510\G0068404.D          Vial: 1
Acq On    : 15 Nov 2010   9:51 am                   Operator: MikeM
Sample    : cc2573-4                                Inst    : MSVOA1
Misc      : ms15868,vg2578,5.00,,,,,                Multiplr: 1.00
MS Integration Params: small.p

Method       : C:\MSDCHEM\1\METHODS\APP9-G.M (RTE Integrator)
Title        : SW-846 Method 5035A/8260B
Last Update  : Tue Nov 09 13:05:46 2010
Response via : Multiple Level Calibration

Min. RRF     :   0.001  Min. Rel. Area :  50%  Max. R.T. Dev  0.50min
Max. RRF Dev :  20%     Max. Rel. Area : 200%
```

		Compound	AvgRF	CCRF	%Dev	Area%	Dev(min)	R.T.
1	I	Fluorobenzene	1.000	1.000	0.0	79	0.00	11.07
2		Dichlorodifluoromethane	0.522	0.356	31.8#	50	-0.02	4.22
3	P	Chloromethane	0.622	0.435	30.1#	54	0.00	4.61
4	C	Vinyl Chloride	0.485	0.413	14.8	60	0.00	4.82
		----------	Amount	Calc.	%Drift		----------	
5		Bromomethane	100.000	92.471	7.5	67	0.00	5.45
6		Chloroethane	100.000	103.045	-3.0	72	0.00	5.70
		----------	AvgRF	CCRF	%Dev		----------	
7		Trichlorofluoromethane	0.476	0.472	0.8	77	-0.01	5.94
8		Ethyl Ether	0.252	0.222	11.9	70	0.00	6.41
9		1,2-Dichlorotrifluoroetha	0.491	0.466	5.1	71	0.00	6.75
10	C	1,1-Dichloroethene	0.743	0.727	2.2	72	0.00	6.82
11		Freon 113	0.360	0.391	-8.6	79	0.00	6.86
12		Carbon Disulfide	1.032	1.070	-3.7	75	0.00	6.92
13		Iodomethane	0.743	0.721	3.0	70	0.00	7.08
14		Allyl chloride	0.699	0.706	-1.0	72	0.00	7.50
15		Methylene Chloride	0.756	0.641	15.2	64	0.00	7.71
16		Acetone	0.301	0.242	19.6	65	0.00	7.73
17		Methyl acetate	0.299	0.217	27.4#	53	0.00	7.87
18		trans-1,2-Dichloroethene	0.754	0.723	4.1	69	0.00	7.90
19		Hexane	0.330	0.365	-10.6	77	0.00	7.98
20		Methyl Tert Butyl Ether	1.248	1.032	17.3	63	0.00	8.01
21		Acetonitrile	0.041	0.035	14.6	64	0.00	8.41
22		Di-isopropyl ether	1.741	1.510	13.3	61	0.00	8.50
23		Chloroprene	0.794	0.845	-6.4	73	0.00	8.73
24	P	1,1-Dichloroethane	0.910	0.851	6.5	67	0.00	8.77
25		Acrylonitrile	0.159	0.111	30.2#	53	0.00	8.83
26		ETBE	1.590	1.386	12.8	63	0.00	9.00
27		Vinyl acetate	1.116	0.780	30.1#	53	0.00	9.04
28		cis-1,2-Dichloroethene	0.425	0.400	5.9	68	0.00	9.49
29		2,2-Dichloropropane	0.477	0.451	5.5	67	0.00	9.65
30		Bromochloromethane	0.258	0.237	8.1	68	0.00	9.76
31		Cyclohexane	0.701	0.705	-0.6	71	0.00	9.79
32	C	Chloroform	0.927	0.890	4.0	69	0.00	9.81
33		Ethyl acetate	0.569	0.290	49.0#	39#	0.00	9.90
		----------	Amount	Calc.	%Drift		----------	
34		Tetrahydrofuran	100.000	64.515	35.5#	47	0.00	10.05
		----------	AvgRF	CCRF	%Dev		----------	

Continuing Calibration Summary

Job Number: F77899 **Sample:** VG2578-CC2573
Account: TETTNOAK Tetra Tech, Inc **Lab FileID:** G0068404.D
Project: Holloman AFB; Alamogordo, NM

35	S	Dibromofluoromethane	0.343	0.367	-7.0	86	0.00	10.06
36		Carbon Tetrachloride	0.727	0.787	-8.3	78	0.00	10.05
37		1,1,1-Trichloroethane	0.690	0.723	-4.8	75	0.00	10.13
38		2-Butanone	0.284	0.236	16.9	64	0.00	10.19
39		1,1-Dichloropropene	0.625	0.630	-0.8	71	0.00	10.28
40		Propionitrile	0.049	0.042	14.3	67	0.00	10.59
41		Methacrylonitrile	0.318	0.283	11.0	68	0.00	10.61
42		Benzene	1.504	1.410	6.3	67	0.00	10.59
43		TAME	1.169	1.015	13.2	64	0.00	10.64
44	S	1,2-Dichloroethane-d4	0.433	0.435	-0.5	85	0.00	10.75
45		1,2-Dichloroethane	0.808	0.762	5.7	69	0.00	10.83
46		Trichloroethene	0.449	0.463	-3.1	74	0.00	11.28
47		Methylcyclohexane	0.579	0.599	-3.5	72	0.00	11.29
48		Dibromomethane	0.318	0.299	6.0	67	0.00	11.80
49	C	1,2-Dichloropropane	0.469	0.415	11.5	64	0.00	11.90
50		Bromodichloromethane	0.698	0.678	2.9	69	0.00	11.94
		----------	Amount	Calc.	%Drift	----------		
51		Methyl methacrylate	100.000	90.015	10.0	68	0.00	12.04
		----------	AvgRF	CCRF	%Dev	----------		
52		2-Chloroethyl vinyl ether	0.167	0.158	5.4	67	0.00	12.53
53		cis-1,3-Dichloropropene	0.726	0.687	5.4	67	0.00	12.67
54	I	Chlorobenzene-d5	1.000	1.000	0.0	83	0.00	14.64
55	S	Toluene-d8	1.418	1.403	1.1	81	0.00	12.88
56	C	Toluene	2.154	1.986	7.8	68	0.00	12.94
		----------	Amount	Calc.	%Drift	----------		
57		2-Nitropropane	500.000	395.703	20.9#	66	0.00	13.20
		----------	AvgRF	CCRF	%Dev	----------		
58		4-Methyl-2-pentanone	0.615	0.513	16.6	65	0.00	13.31
		----------	Amount	Calc.	%Drift	----------		
59		trans-1,3-Dichloropropene	100.000	78.665	21.3#	65	0.00	13.38
		----------	AvgRF	CCRF	%Dev	----------		
60		Tetrachloroethene	0.635	0.626	1.4	73	0.00	13.41
61		Ethyl methacrylate	0.652	0.591	9.4	68	0.00	13.47
62		1,1,2-Trichloroethane	0.424	0.347	18.2	64	0.00	13.58
63		Dibromochloromethane	0.681	0.635	6.8	68	0.00	13.80
64		1,3-Dichloropropane	0.847	0.701	17.2	63	0.00	13.90
65		1,2-Dibromoethane	0.532	0.458	13.9	62	0.00	14.11
		----------	Amount	Calc.	%Drift	----------		
66		2-hexanone	500.000	416.503	16.7	71	0.00	14.23
67		1-Chlorohexane	100.000	86.234	13.8	70	0.00	14.55
		----------	AvgRF	CCRF	%Dev	----------		
68	C	Ethylbenzene	2.291	2.234	2.5	69	0.00	14.63
69	P	Chlorobenzene	1.288	1.214	5.7	68	0.00	14.66
70		1,1,1,2-Tetrachloroethane	0.551	0.516	6.4	68	0.00	14.71
71		m,p-Xylene	1.785	1.720	3.6	70	0.00	14.78
72		o-Xylene	2.030	1.875	7.6	67	0.00	15.26
		----------	Amount	Calc.	%Drift	----------		
73		Styrene	100.000	85.577	14.4	68	0.00	15.31
		----------	AvgRF	CCRF	%Dev	----------		

Continuing Calibration Summary

Job Number: F77899
Account: TETTNOAK Tetra Tech, Inc
Project: Holloman AFB; Alamogordo, NM

Sample: VG2578-CC2573
Lab FileID: G0068404.D

74	P	Bromoform	0.463	0.419	9.5	66	0.00	15.39
75		Isopropylbenzene	1.858	1.825	1.8	69	0.00	15.56
76	I	1,4-Dichlorobenzene-d4	1.000	1.000	0.0	85	0.00	16.92
77	S	4-Bromofluorobenzene	1.001	0.989	1.2	82	0.00	15.88
		----------	Amount	Calc.	%Drift	----------		
78		cis-1,4-Dichloro-2-butene	100.000	83.212	16.8	71	0.00	15.90
		----------	AvgRF	CCRF	%Dev	----------		
79		n-Propylbenzene	4.907	4.626	5.7	71	0.00	15.96
80		Bromobenzene	1.176	1.069	9.1	70	0.00	16.01
81	P	1,1,2,2-Tetrachloroethane	1.052	0.814	22.6#	63	0.00	16.02
82		1,3,5-Trimethylbenzene	3.392	3.184	6.1	71	0.00	16.12
83		2-Chlorotoluene	3.541	3.231	8.8	70	0.00	16.16
84		trans-1,4-Dichloro-2-Bute	0.336	0.274	18.5	61	0.00	16.19
85		1,2,3-Trichloropropane	0.268	0.223	16.8	67	0.00	16.19
86		Cyclohexanone	0.039	0.022	43.6#	47#	0.00	16.27
87		4-Chlorotoluene	3.057	2.798	8.5	70	0.00	16.31
88		tert-Butylbenzene	2.352	2.190	6.9	71	0.00	16.43
89		1,2,4-Trimethylbenzene	3.131	2.861	8.6	71	0.00	16.49
90		Pentachloroethane	0.679	0.696	-2.5	79	0.00	16.50
91		sec-Butylbenzene	3.845	3.552	7.6	70	0.00	16.59
92		4-Isopropyltoluene	2.954	2.857	3.3	72	0.00	16.70
93		1,3-Dichlorobenzene	1.858	1.718	7.5	72	0.00	16.86
94		1,4-Dichlorobenzene	1.805	1.659	8.1	72	0.00	16.94
		----------	Amount	Calc.	%Drift	----------		
95		n-Butylbenzene	100.000	85.779	14.2	73	0.00	17.09
		----------	AvgRF	CCRF	%Dev	----------		
96		Benzyl Chloride	0.301	0.255	15.3	66	0.00	17.13
97		1,2-Dichlorobenzene	1.754	1.558	11.2	69	0.00	17.33
98		1,2-Dibromo-3-Chloropropa	0.210	0.157	25.2#	64	0.00	18.07
		----------	Amount	Calc.	%Drift	----------		
99		Hexachlorobutadiene	100.000	80.037	20.0	76	0.00	18.63
100		1,2,4-Trichlorobenzene	100.000	79.908	20.1#	76	0.00	18.71
101		Naphthalene	100.000	75.116	24.9#	68	0.00	19.05
102		1,2,3-Trichlorobenzene	100.000	83.978	16.0	76	0.00	19.25
		----------	AvgRF	CCRF	%Dev	----------		
103	I	Tert Butyl Alcohol-d10	1.000	1.000	0.0	86	0.00	7.98
104		Ethanol	0.196	0.126	35.7#	59	0.00	6.62
105		Acrolein	1.165	0.707	39.3#	43#	0.00	7.30
106		Tert Butyl Alcohol	1.750	1.311	25.1#	59	0.00	8.09
		----------	Amount	Calc.	%Drift	----------		
107		Isobutyl alcohol	2000.000	2847.827	-42.4#	112	0.00	10.68
		----------	AvgRF	CCRF	%Dev	----------		
108		Tert Amyl Alcohol	1.238	0.986	20.4#	59	0.00	10.83
109		1,4-Dioxane	0.150	0.117	22.0#	59	0.00	12.17

(#) = Out of Range SPCC's out = 0 CCC's out = 0
G0068162.D APP9-G.M Mon Nov 15 10:21:12 2010

Initial Calibration Summary

Job Number: F77899
Account: TETTNOAK Tetra Tech, Inc
Project: Holloman AFB; Alamogordo, NM

Sample: VH2460-ICC2460
Lab FileID: H066004.D

Response Factor Report MSVOA3

Method : C:\MSDCHEM\1\METHODS\APP9-H.M (RTE Integrator)
Title : SW-846 Method 5035A/8260B
Last Update : Mon Nov 15 15:42:44 2010
Response via : Initial Calibration

Calibration Files
1 =H066001.D 2 =H066002.D 3 =H066003.D 4 =H066004.D
5 =H066005.D 6 =H066006.D

		Compound	1	2	3	4	5	6	Avg	%RSD
1)	I	Fluorobenzene	----------ISTD----------							
2)		Dichlorodifluoromet	0.252	0.264	0.216	0.216	0.218	0.207	0.229	10.23
3)	P	Chloromethane	0.601	0.567	0.471	0.440	0.448	0.443	0.495	14.28
4)	C	Vinyl Chloride	0.497	0.437	0.388	0.357	0.375	0.373	0.405	13.04
5)		Bromomethane	0.258	0.210	0.153	0.128	0.118	0.105	0.162	36.96
		---- Quadratic regr., Force(0,0) ---- Coefficient = 0.9970								
		Response Ratio = 0.00000 + 0.16215 *A + -0.01447 *A^2								
6)		Chloroethane	0.274	0.251	0.197	0.180	0.162	0.122	0.198	28.73
		---- Quadratic regr., Force(0,0) ---- Coefficient = 0.9948								
		Response Ratio = 0.00000 + 0.24394 *A + -0.02997 *A^2								
7)		Trichlorofluorometh	0.510	0.433	0.413	0.402	0.395	0.363	0.419	11.93
8)		Ethyl Ether	0.348	0.307	0.318	0.293	0.303	0.301	0.312	6.23
9)		1,2-Dichlorotrifluo	0.598	0.483	0.486	0.470	0.468	0.447	0.492	10.94
10)	C	1,1-Dichloroethene	0.826	0.707	0.701	0.689	0.690	0.662	0.713	8.09
11)		Freon 113	0.436	0.360	0.350	0.326	0.322	0.316	0.352	12.76
12)		Carbon Disulfide	1.486	1.197	1.220	1.183	1.202	1.173	1.244	9.62
13)		Iodomethane	0.620	0.524	0.563	0.528	0.529	0.517	0.547	7.19
14)		Allyl chloride	0.950	0.982	0.996	1.021	1.015	1.007	0.995	2.63
15)		Methylene Chloride	2.057	1.150	0.956	0.746	0.727	0.717	1.059	48.88
		---- Linear regr., Force(0,0) ---- Coefficient = 0.9974								
		Response Ratio = 0.00000 + 0.73467 *A								
16)		Acetone	0.250	0.299	0.301	0.243	0.232	0.241	0.261	11.80
17)		Methyl acetate	0.250	0.283	0.279	0.241	0.230	0.246	0.255	8.34
18)		trans-1,2-Dichloroe	0.789	0.748	0.743	0.720	0.722	0.686	0.735	4.68
19)		Hexane	0.371	0.406	0.413	0.413	0.405	0.376	0.397	4.75
20)		Methyl Tert Butyl E	0.785	0.916	0.871	0.800	0.789	0.801	0.827	6.51
21)		Acetonitrile	0.036	0.044	0.047	0.043	0.041	0.046	0.043	8.98
22)		Di-isopropyl ether	1.768	1.791	1.837	1.816	1.861	1.833	1.818	1.85
23)		Chloroprene	0.833	0.814	0.837	0.805	0.870	0.802	0.827	3.07
24)	P	1,1-Dichloroethane	0.902	0.878	0.873	0.843	0.858	0.825	0.863	3.15
25)		Acrylonitrile	0.107	0.141	0.146	0.129	0.117	0.129	0.128	11.50
26)		ETBE	1.131	1.143	1.120	1.060	1.018	0.992	1.077	5.87
27)		Vinyl acetate	0.789	1.003	1.000	0.894	0.859	0.846	0.898	9.68
28)		cis-1,2-Dichloroeth	0.370	0.400	0.398	0.388	0.400	0.390	0.391	2.92
29)		2,2-Dichloropropane	0.642	0.646	0.652	0.628	0.643	0.606	0.636	2.62
30)		Bromochloromethane	0.172	0.204	0.192	0.179	0.180	0.168	0.182	7.16
31)		Cyclohexane	0.890	0.841	0.825	0.828	0.811	0.773	0.828	4.63
32)	C	Chloroform	0.863	0.823	0.820	0.784	0.784	0.733	0.801	5.56
33)		Ethyl acetate	0.282	0.349	0.332	0.288	0.279	0.290	0.303	9.80
34)		Tetrahydrofuran	0.101	0.111	0.109	0.103	0.090	0.092	0.101	8.60
35)	S	Dibromofluoromethan	0.247	0.251	0.252	0.234	0.229	0.231	0.241	4.38
36)		Carbon Tetrachlorid	0.610	0.617	0.604	0.611	0.590	0.555	0.598	3.80
37)		1,1,1-Trichloroetha	0.666	0.662	0.640	0.636	0.626	0.594	0.637	4.14

Initial Calibration Summary

Job Number: F77899
Account: TETTNOAK Tetra Tech, Inc
Project: Holloman AFB; Alamogordo, NM

Sample: VH2460-ICC2460
Lab FileID: H066004.D

```
38)      2-Butanone           0.291 0.341 0.332 0.282 0.262 0.276 0.297  10.79
39)      1,1-Dichloropropene 0.673 0.635 0.652 0.632 0.629 0.596 0.636   4.03
40)      Propionitrile        0.040 0.056 0.052 0.043 0.040 0.040 0.045  15.65
             ---- Linear regr., Force(0,0) ----  Coefficient =  0.9941
               Response Ratio = 0.00000 + 0.04065 *A

41)      Methacrylonitrile    0.294 0.360 0.335 0.280 0.255 0.250 0.296  14.96
             ---- Linear regr., Force(0,0) ----  Coefficient =  0.9926
               Response Ratio = 0.00000 + 0.25853 *A

42)      Benzene              1.706 1.671 1.522 1.430 1.370 1.251 1.492  11.84
43)      TAME                 0.697 0.767 0.742 0.710 0.688 0.700 0.717   4.25
44)  S   1,2-Dichloroethane- 0.380 0.404 0.410 0.362 0.336 0.340 0.372   8.42
45)      1,2-Dichloroethane   0.665 0.738 0.734 0.688 0.676 0.662 0.694   4.89
46)      Trichloroethene      0.462 0.432 0.426 0.402 0.388 0.364 0.412   8.43
47)      Methylcyclohexane    0.616 0.639 0.620 0.613 0.595 0.555 0.606   4.80
48)      Dibromomethane       0.184 0.220 0.234 0.224 0.219 0.217 0.216   7.87
49)  C   1,2-Dichloropropane 0.449 0.441 0.459 0.453 0.455 0.442 0.450   1.60
50)      Bromodichloromethan 0.505 0.597 0.617 0.605 0.607 0.592 0.587   7.05
51)      Methyl methacrylate 0.331 0.505 0.519 0.475 0.463 0.482 0.463  14.62
52)      2-Chloroethyl vinyl 0.090 0.138 0.141 0.129 0.118 0.118 0.122  15.30
             ---- Linear regr., Force(0,0) ----  Coefficient =  0.9959
               Response Ratio = 0.00000 + 0.12025 *A

53)      cis-1,3-Dichloropro 0.608 0.755 0.762 0.732 0.721 0.708 0.715   7.80

54)  I   Chlorobenzene-d5       ----------------ISTD--------------------
55)  S   Toluene-d8                1.344 1.422 1.603 1.719 1.887 1.595  13.80
56)  C   Toluene              2.222 2.315 2.363 2.553 2.746 2.804 2.501   9.56
57)      2-Nitropropane       0.149 0.226 0.230 0.228 0.242 0.270 0.224  17.98
             ---- Linear regr., Force(0,0) ----  Coefficient =  0.9922
               Response Ratio = 0.00000 + 0.25439 *A

58)      4-Methyl-2-pentanon 0.638 0.724 0.737 0.707 0.724 0.787 0.719   6.74
59)      trans-1,3-Dichlorop 0.668 0.880 0.906 0.947 1.028 1.064 0.916  15.29
             ---- Linear regr., Force(0,0) ----  Coefficient =  0.9974
               Response Ratio = 0.00000 + 1.03154 *A

60)      Tetrachloroethene    0.668 0.696 0.665 0.688 0.698 0.680 0.682   2.03
61)      Ethyl methacrylate   0.540 0.749 0.774 0.823 0.889 0.969 0.791  18.55
             ---- Linear regr., Force(0,0) ----  Coefficient =  0.9939
               Response Ratio = 0.00000 + 0.91811 *A

62)      1,1,2-Trichloroetha 0.304 0.410 0.412 0.424 0.468 0.492 0.419  15.59
             ---- Linear regr., Force(0,0) ----  Coefficient =  0.9957
               Response Ratio = 0.00000 + 0.47306 *A

63)      Dibromochloromethan 0.351 0.529 0.562 0.600 0.632 0.664 0.556  20.00
             ---- Linear regr., Force(0,0) ----  Coefficient =  0.9978
               Response Ratio = 0.00000 + 0.64155 *A

64)      1,3-Dichloropropane 0.696 0.933 0.913 0.959 1.054 1.125 0.946  15.51
             ---- Linear regr., Force(0,0) ----  Coefficient =  0.9947
               Response Ratio = 0.00000 + 1.07344 *A

65)      1,2-Dibromoethane    0.330 0.438 0.486 0.478 0.526 0.558 0.469  17.02
             ---- Linear regr., Force(0,0) ----  Coefficient =  0.9955
               Response Ratio = 0.00000 + 0.53471 *A

66)      2-hexanone           0.550 0.669 0.667 0.657 0.659 0.699 0.650   7.94
```

Initial Calibration Summary

Job Number: F77899 **Sample:** VH2460-ICC2460
Account: TETTNOAK Tetra Tech, Inc **Lab FileID:** H066004.D
Project: Holloman AFB; Alamogordo, NM

67)		1-Chlorohexane	0.744	0.832	0.868	0.962	1.039	1.042	0.914	13.14
68)	C	Ethylbenzene	2.400	2.644	2.592	2.661	2.783	2.684	2.628	4.87
69)	P	Chlorobenzene	1.287	1.423	1.401	1.396	1.463	1.438	1.401	4.36
70)		1,1,1,2-Tetrachloro	0.455	0.536	0.544	0.580	0.615	0.618	0.558	10.97
71)		m,p-Xylene	2.218	2.232	2.163	2.132	2.174	2.070	2.165	2.73
72)		o-Xylene	1.988	2.309	2.319	2.431	2.579	2.552	2.363	9.12
73)		Styrene	1.270	1.560	1.648	1.736	1.866	1.862	1.657	13.53
74)	P	Bromoform	0.229	0.373	0.391	0.404	0.421	0.434	0.375	19.89
		---- Linear regr., Force(0,0) ---- Coefficient = 0.9991								
		Response Ratio = 0.00000 + 0.42431 *A								
75)		Isopropylbenzene	2.053	2.235	2.220	2.361	2.526	2.435	2.305	7.37
76)	I	1,4-Dichlorobenzene-d ----------ISTD----------								
77)	S	4-Bromofluorobenzen	0.868	0.826	0.851	0.884	0.892	0.895	0.869	3.10
78)		cis-1,4-Dichloro-2-	0.271	0.434	0.457	0.450	0.480	0.509	0.434	19.38
		---- Linear regr., Force(0,0) ---- Coefficient = 0.9968								
		Response Ratio = 0.00000 + 0.49065 *A								
79)		n-Propylbenzene	5.617	5.283	5.523	5.552	5.720	5.404	5.516	2.81
80)		Bromobenzene	1.181	1.135	1.156	1.078	1.081	1.016	1.108	5.47
81)	P	1,1,2,2-Tetrachloro	0.900	1.066	1.070	0.979	1.005	1.030	1.009	6.31
82)		1,3,5-Trimethylbenz	3.793	3.828	3.844	3.723	3.727	3.514	3.738	3.23
83)		2-Chlorotoluene	4.367	3.903	3.988	3.965	4.008	3.783	4.002	4.90
84)		trans-1,4-Dichloro-	0.265	0.431	0.424	0.424	0.445	0.425	0.402	16.88
		---- Linear regr., Force(0,0) ---- Coefficient = 0.9988								
		Response Ratio = 0.00000 + 0.43097 *A								
85)		1,2,3-Trichloroprop	0.163	0.282	0.291	0.251	0.262	0.265	0.252	18.32
		---- Linear regr., Force(0,0) ---- Coefficient = 0.9980								
		Response Ratio = 0.00000 + 0.26310 *A								
86)		Cyclohexanone	0.028	0.028	0.031	0.031	0.033	0.038	0.031	11.84
87)		4-Chlorotoluene	3.604	3.579	3.660	3.638	3.762	3.641	3.647	1.73
88)		tert-Butylbenzene	2.416	2.471	2.498	2.513	2.518	2.431	2.474	1.75
89)		1,2,4-Trimethylbenz	3.910	3.624	3.626	3.492	3.353	3.088	3.516	7.93
90)		Pentachloroethane	0.656	0.670	0.677	0.607	0.574	0.547	0.622	8.67
91)		sec-Butylbenzene	4.672	4.625	4.647	4.702	4.780	4.462	4.648	2.28
92)		4-Isopropyltoluene	3.491	3.587	3.621	3.645	3.688	3.417	3.575	2.85
93)		1,3-Dichlorobenzene	2.053	2.035	2.077	2.074	2.119	2.011	2.061	1.81
94)		1,4-Dichlorobenzene	2.266	2.194	2.153	2.095	2.081	1.980	2.128	4.67
95)		n-Butylbenzene	2.066	2.360	2.336	2.473	2.536	2.374	2.358	6.88
96)		Benzyl Chloride	0.186	0.292	0.374	0.354	0.377	0.375	0.326	23.22
		---- Linear regr., Force(0,0) ---- Coefficient = 0.9991								
		Response Ratio = 0.00000 + 0.37253 *A								
97)		1,2-Dichlorobenzene	1.975	2.069	1.982	1.957	2.002	1.921	1.984	2.50
98)		1,2-Dibromo-3-Chlor	0.078	0.178	0.214	0.204	0.218	0.239	0.189	30.61
		---- Linear regr., Force(0,0) ---- Coefficient = 0.9943								
		Response Ratio = 0.00000 + 0.22679 *A								
99)		Hexachlorobutadiene	1.003	1.149	1.073	1.090	1.023	0.912	1.042	7.87
100)		1,2,4-Trichlorobenz	1.510	1.578	1.553	1.511	1.492	1.384	1.505	4.46
101)		Naphthalene	3.110	2.673	2.870	2.735	2.778	2.826	2.832	5.39
102)		1,2,3-Trichlorobenz	1.459	1.402	1.363	1.349	1.310	1.234	1.353	5.69
103)	I	Tert Butyl Alcohol-d1 ----------ISTD----------								
104)		Ethanol	0.317	0.318	0.227	0.292	0.303	0.334	0.298	12.69
105)		Acrolein	0.664	0.980	1.192	1.247	1.319	1.379	1.130	23.60
		---- Linear regr., Force(0,0) ---- Coefficient = 0.9982								

Initial Calibration Summary

Job Number: F77899
Account: TETTNOAK Tetra Tech, Inc
Project: Holloman AFB; Alamogordo, NM

Sample: VH2460-ICC2460
Lab FileID: H066004.D

```
                Response Ratio = 0.00000 + 1.33526 *A

106)     Tert Butyl Alcohol  2.441 2.555 2.548 2.492 2.594 2.691 2.553   3.37
107)     Isobutyl alcohol    0.382 0.278 0.274 0.296 0.269 0.268 0.294  15.01
             ---- Linear regr., Force(0,0) ----  Coefficient =  0.9973
                Response Ratio = 0.00000 + 0.27228 *A

108)     Tert Amyl Alcohol   0.871 1.315 1.291 1.443 1.471 1.548 1.323  18.26
             ---- Linear regr., Force(0,0) ----  Coefficient =  0.9981
                Response Ratio = 0.00000 + 1.50103 *A

109)     1,4-Dioxane         0.134 0.101 0.152 0.164 0.167 0.171 0.148  17.93
             ---- Linear regr., Force(0,0) ----  Coefficient =  0.9990
                Response Ratio = 0.00000 + 0.16758 *A

 ---------------------------------------------------------------------------
 (#) = Out of Range

           APP9-H.M          Mon Nov 15 15:43:42 2010
```

5.7.4

5

Initial Calibration Verification

Job Number: F77899
Account: TETTNOAK Tetra Tech, Inc
Project: Holloman AFB; Alamogordo, NM

Sample: VH2460-ICV2460
Lab FileID: H066007.D

Evaluate Continuing Calibration Report

```
Data File : H:\HPCHEM\1\DATA\111510\H066007.D            Vial: 7
Acq On    : 15 Nov 2010   2:19 pm                     Operator: MikeM
Sample    : icv2460-3                                 Inst    : MSVOA3
Misc      : ms15822,vh2460,5.00,,,,,                  Multiplr: 1.00
MS Integration Params: small.p

Method       : C:\MSDCHEM\1\METHODS\APP9-H.M (RTE Integrator)
Title        : SW-846 Method 5035A/8260B
Last Update  : Mon Nov 15 14:43:10 2010
Response via : Multiple Level Calibration

Min. RRF     :   0.001  Min. Rel. Area :  50%  Max. R.T. Dev  0.50min
Max. RRF Dev :  20%     Max. Rel. Area : 200%
```

		Compound	AvgRF	CCRF	%Dev	Area%	Dev(min)	R.T.
1	I	Fluorobenzene	1.000	1.000	0.0	110	0.00	11.24
2		Dichlorodifluoromethane	0.229	0.234	-2.2	119	0.00	3.97
3	P	Chloromethane	0.495	0.455	8.1	106	0.00	4.28
4	C	Vinyl Chloride	0.405	0.375	7.4	106	0.00	4.50
		----------	Amount	Calc.	%Drift		----------	
5		Bromomethane	50.000	48.679	2.6	103	0.01	5.13
6		Chloroethane	50.000	44.114	11.8	107	0.00	5.37
		----------	AvgRF	CCRF	%Dev		----------	
7		Trichlorofluoromethane	0.419	0.404	3.6	107	0.01	5.66
8		Ethyl Ether	0.312	0.328	-5.1	113	0.01	6.20
9		1,2-Dichlorotrifluoroetha	0.492	0.552	-12.2	124	0.00	6.55
10	C	1,1-Dichloroethene	0.713	0.656	8.0	103	0.01	6.61
11		Freon 113	0.352	0.351	0.3	110	0.00	6.71
12		Carbon Disulfide	1.244	1.152	7.4	103	0.00	6.71
13		Iodomethane	0.547	0.528	3.5	103	0.00	6.89
14		Allyl chloride	0.995	0.975	2.0	107	0.01	7.43
		----------	Amount	Calc.	%Drift		----------	
15		Methylene Chloride	50.000	65.516	-31.0#	110	0.01	7.61
		----------	AvgRF	CCRF	%Dev		----------	
16		Acetone	0.261	0.145	44.4#	53	0.01	7.66
17		Methyl acetate	0.255	0.282	-10.6	111	0.00	7.85
18		trans-1,2-Dichloroethene	0.735	0.736	-0.1	109	0.00	7.88
19		Hexane	0.397	0.462	-16.4	122	0.00	7.99
20		Methyl Tert Butyl Ether	0.827	0.877	-6.0	110	0.00	8.03
21		Acetonitrile	0.043	0.046	-7.0	107	0.01	8.42
22		Di-isopropyl ether	1.818	2.059	-13.3	123	0.00	8.60
23		Chloroprene	0.827	0.854	-3.3	112	0.00	8.81
24	P	1,1-Dichloroethane	0.863	0.915	-6.0	115	0.00	8.84
25		Acrylonitrile	0.128	0.140	-9.4	105	0.01	8.89
26		ETBE	1.077	1.145	-6.3	112	0.00	9.14
27		Vinyl acetate	0.898	0.885	1.4	97	0.00	9.15
28		cis-1,2-Dichloroethene	0.391	0.436	-11.5	120	0.00	9.62
29		2,2-Dichloropropane	0.636	0.646	-1.6	109	0.00	9.77
30		Bromochloromethane	0.182	0.185	-1.6	106	0.00	9.90
31		Cyclohexane	0.828	0.867	-4.7	115	0.00	9.94
32	C	Chloroform	0.801	0.832	-3.9	111	0.00	9.97
33		Ethyl acetate	0.303	0.334	-10.2	110	0.01	10.09
34		Tetrahydrofuran	0.101	0.105	-4.0	106	0.02	10.22

Initial Calibration Verification

Job Number: F77899
Account: TETTNOAK Tetra Tech, Inc
Project: Holloman AFB; Alamogordo, NM

Sample: VH2460-ICV2460
Lab FileID: H066007.D

35	S	Dibromofluoromethane	0.241	0.235	2.5	102	0.00	10.21
36		Carbon Tetrachloride	0.598	0.591	1.2	107	0.00	10.20
37		1,1,1-Trichloroethane	0.637	0.630	1.1	108	0.00	10.28
38		2-Butanone	0.297	0.224	24.6#	74	0.01	10.35
39		1,1-Dichloropropene	0.636	0.672	-5.7	113	0.00	10.43
		----------	Amount	Calc.	%Drift		----------	
40		Propionitrile	500.000	561.558	-12.3	97	0.00	10.73
41		Methacrylonitrile	500.000	592.041	-18.4	100	0.00	10.75
		----------	AvgRF	CCRF	%Dev		----------	
42		Benzene	1.492	1.608	-7.8	116	0.00	10.75
43		TAME	0.717	0.769	-7.3	114	0.01	10.84
44	S	1,2-Dichloroethane-d4	0.372	0.384	-3.2	103	0.00	10.90
45		1,2-Dichloroethane	0.694	0.723	-4.2	108	0.01	10.99
46		Trichloroethene	0.412	0.435	-5.6	112	0.01	11.46
47		Methylcyclohexane	0.606	0.723	-19.3	128	0.00	11.47
48		Dibromomethane	0.216	0.246	-13.9	116	0.00	11.98
49	C	1,2-Dichloropropane	0.450	0.494	-9.8	118	0.00	12.07
50		Bromodichloromethane	0.587	0.639	-8.9	113	0.00	12.12
51		Methyl methacrylate	0.463	0.486	-5.0	103	0.00	12.24
		----------	Amount	Calc.	%Drift		----------	
52		2-Chloroethyl vinyl ether	250.000	263.455	-5.4	98	0.00	12.71
		----------	AvgRF	CCRF	%Dev		----------	
53		cis-1,3-Dichloropropene	0.715	0.808	-13.0	116	0.00	12.83
54	I	Chlorobenzene-d5	1.000	1.000	0.0	107	0.00	14.76
55	S	Toluene-d8	1.595	1.456	8.7	109	0.00	13.05
56	C	Toluene	2.501	2.555	-2.2	116	0.00	13.11
		----------	Amount	Calc.	%Drift		----------	
57		2-Nitropropane	250.000	209.326	16.3	99	0.00	13.34
		----------	AvgRF	CCRF	%Dev		----------	
58		4-Methyl-2-pentanone	0.719	0.721	-0.3	105	0.00	13.47
		----------	Amount	Calc.	%Drift		----------	
59		trans-1,3-Dichloropropene	50.000	49.816	0.4	121	0.00	13.54
		----------	AvgRF	CCRF	%Dev		----------	
60		Tetrachloroethene	0.682	0.699	-2.5	112	0.01	13.57
		----------	Amount	Calc.	%Drift		----------	
61		Ethyl methacrylate	50.000	41.517	17.0	105	0.01	13.65
62		1,1,2-Trichloroethane	50.000	44.990	10.0	110	0.00	13.73
63		Dibromochloromethane	50.000	42.961	14.1	105	0.00	13.95
64		1,3-Dichloropropane	50.000	45.671	8.7	115	0.00	14.03
65		1,2-Dibromoethane	50.000	44.311	11.4	104	0.00	14.24
		----------	AvgRF	CCRF	%Dev		----------	
66		2-hexanone	0.650	0.534	17.8	86	0.00	14.36
67		1-Chlorohexane	0.914	0.996	-9.0	123	0.00	14.68
68	C	Ethylbenzene	2.628	2.790	-6.2	115	0.00	14.76
69	P	Chlorobenzene	1.401	1.532	-9.4	117	0.00	14.78
70		1,1,1,2-Tetrachloroethane	0.558	0.577	-3.4	113	0.00	14.83
71		m,p-Xylene	2.165	2.337	-7.9	116	0.00	14.91
72		o-Xylene	2.363	2.533	-7.2	117	0.00	15.38
73		Styrene	1.657	1.781	-7.5	116	0.00	15.43

Initial Calibration Verification

Job Number: F77899
Account: TETTNOAK Tetra Tech, Inc
Project: Holloman AFB; Alamogordo, NM

Sample: VH2460-ICV2460
Lab FileID: H066007.D

			Amount	Calc.	%Drift			
74	P	Bromoform	50.000	42.762	14.5	99	0.00	15.51

			AvgRF	CCRF	%Dev			
75		Isopropylbenzene	2.305	2.773	-20.3#	134	0.00	15.70
76	I	1,4-Dichlorobenzene-d4	1.000	1.000	0.0	102	0.00	17.23
77	S	4-Bromofluorobenzene	0.869	0.840	3.3	101	0.00	16.04

			Amount	Calc.	%Drift			
78		cis-1,4-Dichloro-2-butene	50.000	47.752	4.5	105	0.00	16.06

			AvgRF	CCRF	%Dev			
79		n-Propylbenzene	5.516	6.508	-18.0	120	0.00	16.13
80		Bromobenzene	1.108	1.199	-8.2	106	0.01	16.19
81	P	1,1,2,2-Tetrachloroethane	1.009	1.172	-16.2	112	0.00	16.20
82		1,3,5-Trimethylbenzene	3.738	4.354	-16.5	115	0.00	16.31
83		2-Chlorotoluene	4.002	4.657	-16.4	119	0.00	16.35

			Amount	Calc.	%Drift			
84		trans-1,4-Dichloro-2-Bute	50.000	54.935	-9.9	114	0.00	16.38
85		1,2,3-Trichloropropane	50.000	50.788	-1.6	94	0.00	16.37

			AvgRF	CCRF	%Dev			
86		Cyclohexanone	0.031	0.044	-41.9#	146	0.00	16.46
87		4-Chlorotoluene	3.647	4.259	-16.8	119	0.00	16.51
88		tert-Butylbenzene	2.474	2.866	-15.8	117	0.00	16.67
89		1,2,4-Trimethylbenzene	3.516	4.192	-19.2	118	0.00	16.74
90		Pentachloroethane	0.622	0.678	-9.0	102	0.00	16.75
91		sec-Butylbenzene	4.648	5.618	-20.9#	123	0.00	16.86
92		4-Isopropyltoluene	3.575	4.366	-22.1#	123	0.00	16.98
93		1,3-Dichlorobenzene	2.061	2.393	-16.1	117	0.00	17.16
94		1,4-Dichlorobenzene	2.128	2.397	-12.6	113	0.00	17.25
95		n-Butylbenzene	2.358	2.892	-22.6#	126	0.00	17.44

			Amount	Calc.	%Drift			
96		Benzyl Chloride	50.000	50.305	-0.6	102	0.00	17.49

			AvgRF	CCRF	%Dev			
97		1,2-Dichlorobenzene	1.984	2.239	-12.9	115	0.00	17.71

			Amount	Calc.	%Drift			
98		1,2-Dibromo-3-Chloropropa	50.000	50.027	-0.1	108	0.00	18.56

			AvgRF	CCRF	%Dev			
99		Hexachlorobutadiene	1.042	1.249	-19.9	119	0.00	19.21
100		1,2,4-Trichlorobenzene	1.505	1.719	-14.2	113	0.00	19.29
101		Naphthalene	2.832	3.219	-13.7	114	0.00	19.66
102		1,2,3-Trichlorobenzene	1.353	1.528	-12.9	114	0.00	19.88
103	I	Tert Butyl Alcohol-d10	1.000	1.000	0.0	92	0.01	8.05
104		Ethanol	0.298	0.355	-19.1	144	-0.04	6.49

			Amount	Calc.	%Drift			
105		Acrolein	250.000	259.613	-3.8	107	0.00	7.20

			AvgRF	CCRF	%Dev			
106		Tert Butyl Alcohol	2.553	2.562	-0.4	93	0.01	8.15

Initial Calibration Verification

Job Number: F77899
Account: TETTNOAK Tetra Tech, Inc
Project: Holloman AFB; Alamogordo, NM

Sample: VH2460-ICV2460
Lab FileID: H066007.D

		Amount	Calc.	%Drift			
107	Isobutyl alcohol	1000.000	1165.164	-16.5	107	0.02	10.22
108	Tert Amyl Alcohol	500.000	553.170	-10.6	119	0.00	11.04
109	1,4-Dioxane	1000.000	1095.580	-9.6	112	0.00	12.35

(#) = Out of Range SPCC's out = 0 CCC's out = 0
H066003.D APP9-H.M Mon Nov 15 15:15:42 2010

5.7.5

5

Continuing Calibration Summary

Job Number: F77899
Account: TETTNOAK Tetra Tech, Inc
Project: Holloman AFB; Alamogordo, NM

Sample: VH2461-CC2460
Lab FileID: H066051.D

Evaluate Continuing Calibration Report

```
Data File : H:\HPCHEM\1\DATA\111610\H066051.D            Vial: 1
Acq On    : 16 Nov 2010   9:43 am                     Operator: MikeM
Sample    : cc2460-4                                  Inst    : MSVOA3
Misc      : ms15875,vh2461,5.00,,,,,                  Multiplr: 1.00
MS Integration Params: small.p

Method       : C:\MSDCHEM\1\METHODS\APP9-H.M (RTE Integrator)
Title        : SW-846 Method 5035A/8260B
Last Update  : Mon Nov 15 15:42:44 2010
Response via : Multiple Level Calibration

Min. RRF     :   0.001  Min. Rel. Area :  50%  Max. R.T. Dev  0.50min
Max. RRF Dev :  20%     Max. Rel. Area : 200%
```

		Compound	AvgRF	CCRF	%Dev	Area%	Dev(min)	R.T.
1	I	Fluorobenzene	1.000	1.000	0.0	97	0.00	11.24
2		Dichlorodifluoromethane	0.229	0.249	-8.7	111	0.00	3.98
3	P	Chloromethane	0.495	0.552	-11.5	121	0.00	4.30
4	C	Vinyl Chloride	0.405	0.477	-17.8	129	0.00	4.50
		----------	Amount	Calc.	%Drift		----------	
5		Bromomethane	100.000	100.026	-0.0	101	0.03	5.14
6		Chloroethane	100.000	99.111	0.9	98	-0.01	5.37
		----------	AvgRF	CCRF	%Dev		----------	
7		Trichlorofluoromethane	0.419	0.407	2.9	98	0.00	5.65
8		Ethyl Ether	0.312	0.314	-0.6	104	0.00	6.20
9		1,2-Dichlorotrifluoroetha	0.492	0.499	-1.4	103	-0.01	6.55
10	C	1,1-Dichloroethene	0.713	0.715	-0.3	100	0.02	6.62
11		Freon 113	0.352	0.359	-2.0	107	0.00	6.72
12		Carbon Disulfide	1.244	1.244	0.0	102	0.00	6.71
13		Iodomethane	0.547	0.532	2.7	97	0.00	6.89
14		Allyl chloride	0.995	1.081	-8.6	102	0.00	7.42
		----------	Amount	Calc.	%Drift		----------	
15		Methylene Chloride	100.000	96.907	3.1	92	0.00	7.60
		----------	AvgRF	CCRF	%Dev		----------	
16		Acetone	0.261	0.273	-4.6	108	0.00	7.66
17		Methyl acetate	0.255	0.243	4.7	98	0.00	7.85
18		trans-1,2-Dichloroethene	0.735	0.749	-1.9	101	0.00	7.88
19		Hexane	0.397	0.445	-12.1	104	0.00	7.99
20		Methyl Tert Butyl Ether	0.827	0.786	5.0	95	0.00	8.03
21		Acetonitrile	0.043	0.047	-9.3	105	0.02	8.43
22		Di-isopropyl ether	1.818	1.866	-2.6	99	0.00	8.60
23		Chloroprene	0.827	0.868	-5.0	104	0.00	8.80
24	P	1,1-Dichloroethane	0.863	0.877	-1.6	100	0.00	8.83
25		Acrylonitrile	0.128	0.112	12.5	84	0.00	8.88
26		ETBE	1.077	1.044	3.1	95	0.00	9.14
27		Vinyl acetate	0.898	0.802	10.7	87	0.00	9.15
28		cis-1,2-Dichloroethene	0.391	0.394	-0.8	98	0.00	9.62
29		2,2-Dichloropropane	0.636	0.638	-0.3	98	-0.01	9.77
30		Bromochloromethane	0.182	0.175	3.8	95	0.00	9.90
31		Cyclohexane	0.828	0.849	-2.5	99	0.00	9.94
32	C	Chloroform	0.801	0.779	2.7	96	0.00	9.97
33		Ethyl acetate	0.303	0.607	-100.3#	204#	0.00	10.07
34		Tetrahydrofuran	0.101	0.096	5.0	91	0.00	10.21

Continuing Calibration Summary

Job Number: F77899
Account: TETTNOAK Tetra Tech, Inc
Project: Holloman AFB; Alamogordo, NM

Sample: VH2461-CC2460
Lab FileID: H066051.D

35	S	Dibromofluoromethane	0.241	0.229	5.0	94	0.00	10.21
36		Carbon Tetrachloride	0.598	0.589	1.5	93	0.00	10.20
37		1,1,1-Trichloroethane	0.637	0.618	3.0	94	0.00	10.28
38		2-Butanone	0.297	0.301	-1.3	103	0.00	10.35
39		1,1-Dichloropropene	0.636	0.650	-2.2	99	0.00	10.43
		----------	Amount	Calc.	%Drift		----------	
40		Propionitrile	1000.000	1082.329	-8.2	99	0.00	10.72
41		Methacrylonitrile	1000.000	1082.308	-8.2	96	0.00	10.76
		----------	AvgRF	CCRF	%Dev		----------	
42		Benzene	1.492	1.446	3.1	98	0.00	10.74
43		TAME	0.717	0.681	5.0	93	0.00	10.84
44	S	1,2-Dichloroethane-d4	0.372	0.347	6.7	92	0.00	10.90
45		1,2-Dichloroethane	0.694	0.680	2.0	96	0.00	10.99
46		Trichloroethene	0.412	0.398	3.4	96	0.00	11.45
47		Methylcyclohexane	0.606	0.634	-4.6	100	0.00	11.47
48		Dibromomethane	0.216	0.214	0.9	93	0.00	11.97
49	C	1,2-Dichloropropane	0.450	0.462	-2.7	99	0.00	12.07
50		Bromodichloromethane	0.587	0.587	0.0	94	0.00	12.13
51		Methyl methacrylate	0.463	0.458	1.1	93	0.00	12.24
		----------	Amount	Calc.	%Drift		----------	
52		2-Chloroethyl vinyl ether	500.000	312.518	37.5#	56	0.00	12.71
		----------	AvgRF	CCRF	%Dev		----------	
53		cis-1,3-Dichloropropene	0.715	0.742	-3.8	98	0.00	12.83
54	I	Chlorobenzene-d5	1.000	1.000	0.0	92	0.00	14.76
55	S	Toluene-d8	1.595	1.626	-1.9	94	0.00	13.05
56	C	Toluene	2.501	2.672	-6.8	97	0.00	13.10
		----------	Amount	Calc.	%Drift		----------	
57		2-Nitropropane	500.000	456.839	8.6	94	0.00	13.34
		----------	AvgRF	CCRF	%Dev		----------	
58		4-Methyl-2-pentanone	0.719	0.744	-3.5	97	0.00	13.47
		----------	Amount	Calc.	%Drift		----------	
59		trans-1,3-Dichloropropene	100.000	96.705	3.3	97	0.00	13.54
		----------	AvgRF	CCRF	%Dev		----------	
60		Tetrachloroethene	0.682	0.685	-0.4	92	0.00	13.57
		----------	Amount	Calc.	%Drift		----------	
61		Ethyl methacrylate	100.000	93.290	6.7	96	0.00	13.65
62		1,1,2-Trichloroethane	100.000	94.411	5.6	97	0.00	13.72
63		Dibromochloromethane	100.000	90.984	9.0	90	0.00	13.95
64		1,3-Dichloropropane	100.000	93.791	6.2	97	0.00	14.03
65		1,2-Dibromoethane	100.000	92.230	7.8	95	0.00	14.24
		----------	AvgRF	CCRF	%Dev		----------	
66		2-hexanone	0.650	0.684	-5.2	96	0.00	14.35
67		1-Chlorohexane	0.914	1.033	-13.0	99	0.00	14.69
68	C	Ethylbenzene	2.628	2.720	-3.5	94	0.00	14.76
69	P	Chlorobenzene	1.401	1.454	-3.8	96	0.00	14.78
70		1,1,1,2-Tetrachloroethane	0.558	0.590	-5.7	94	0.00	14.83
71		m,p-Xylene	2.165	2.206	-1.9	96	0.00	14.91
72		o-Xylene	2.363	2.515	-6.4	96	0.00	15.38
73		Styrene	1.657	1.799	-8.6	96	0.00	15.43

Continuing Calibration Summary

Job Number: F77899
Account: TETTNOAK Tetra Tech, Inc
Project: Holloman AFB; Alamogordo, NM

Sample: VH2461-CC2460
Lab FileID: H066051.D

			Amount	Calc.	%Drift			
74	P	Bromoform	100.000	93.304	6.7	90	0.00	15.52

			AvgRF	CCRF	%Dev			
75		Isopropylbenzene	2.305	2.465	-6.9	96	0.00	15.69
76	I	1,4-Dichlorobenzene-d4	1.000	1.000	0.0	92	0.00	17.23
77	S	4-Bromofluorobenzene	0.869	0.868	0.1	90	0.00	16.04

			Amount	Calc.	%Drift			
78		cis-1,4-Dichloro-2-butene	100.000	94.158	5.8	94	0.00	16.06

			AvgRF	CCRF	%Dev			
79		n-Propylbenzene	5.516	5.848	-6.0	97	0.00	16.13
80		Bromobenzene	1.108	1.092	1.4	93	0.00	16.18
81	P	1,1,2,2-Tetrachloroethane	1.009	1.019	-1.0	96	0.00	16.19
82		1,3,5-Trimethylbenzene	3.738	3.918	-4.8	97	0.00	16.31
83		2-Chlorotoluene	4.002	4.062	-1.5	94	0.00	16.34

			Amount	Calc.	%Drift			
84		trans-1,4-Dichloro-2-Bute	100.000	105.503	-5.5	98	0.00	16.38
85		1,2,3-Trichloropropane	100.000	103.150	-3.2	99	0.00	16.37

			AvgRF	CCRF	%Dev			
86		Cyclohexanone	0.031	0.023	25.8#	68	0.00	16.46
87		4-Chlorotoluene	3.647	3.839	-5.3	97	0.00	16.52
88		tert-Butylbenzene	2.474	2.576	-4.1	94	0.00	16.67
89		1,2,4-Trimethylbenzene	3.516	3.592	-2.2	95	0.00	16.74
90		Pentachloroethane	0.622	0.617	0.8	93	0.00	16.75
91		sec-Butylbenzene	4.648	4.949	-6.5	97	0.00	16.86
92		4-Isopropyltoluene	3.575	3.829	-7.1	96	0.00	16.98
93		1,3-Dichlorobenzene	2.061	2.150	-4.3	95	0.00	17.16
94		1,4-Dichlorobenzene	2.128	2.131	-0.1	93	0.00	17.25
95		n-Butylbenzene	2.358	2.642	-12.0	98	0.00	17.44

			Amount	Calc.	%Drift			
96		Benzyl Chloride	100.000	100.825	-0.8	98	0.00	17.48

			AvgRF	CCRF	%Dev			
97		1,2-Dichlorobenzene	1.984	2.005	-1.1	94	0.00	17.71

			Amount	Calc.	%Drift			
98		1,2-Dibromo-3-Chloropropa	100.000	91.888	8.1	94	0.00	18.56

			AvgRF	CCRF	%Dev			
99		Hexachlorobutadiene	1.042	1.052	-1.0	89	0.00	19.22
100		1,2,4-Trichlorobenzene	1.505	1.508	-0.2	92	0.00	19.29
101		Naphthalene	2.832	2.679	5.4	90	0.00	19.66
102		1,2,3-Trichlorobenzene	1.353	1.287	4.9	88	0.00	19.88
103	I	Tert Butyl Alcohol-d10	1.000	1.000	0.0	93	-0.01	8.03
104		Ethanol	0.298	0.307	-3.0	98	-0.02	6.51

			Amount	Calc.	%Drift			
105		Acrolein	500.000	445.356	10.9	89	0.00	7.20

			AvgRF	CCRF	%Dev			
106		Tert Butyl Alcohol	2.553	2.629	-3.0	98	0.00	8.14

Continuing Calibration Summary

Job Number: F77899
Account: TETTNOAK Tetra Tech, Inc
Project: Holloman AFB; Alamogordo, NM

Sample: VH2461-CC2460
Lab FileID: H066051.D

		Amount	Calc.	%Drift			
107	Isobutyl alcohol	2000.000	1991.369	0.4	85	0.00	10.21
108	Tert Amyl Alcohol	1000.000	990.169	1.0	96	0.00	11.04
109	1,4-Dioxane	2000.000	1849.508	7.5	88	0.02	12.37

(#) = Out of Range SPCC's out = 0 CCC's out = 0
H066004.D APP9-H.M Tue Nov 16 10:11:36 2010

Southeast ACCUTEST LABORATORIES

GC Volatiles

QC Data Summaries

Includes the following where applicable:

- Method Blank Summaries
- Blank Spike Summaries
- Matrix Spike and Duplicate Summaries
- Surrogate Recovery Summaries
- GC Surrogate Retention Time Summaries
- Initial and Continuing Calibration Summaries

Method Blank Summary

Job Number: F77899
Account: TETTNOAK Tetra Tech, Inc
Project: Holloman AFB; Alamogordo, NM

Sample	File ID	DF	Analyzed	By	Prep Date	Prep Batch	Analytical Batch
GQR2466-MB	QR056638.D	1	11/12/10	AH	n/a	n/a	GQR2466

The QC reported here applies to the following samples: **Method:** SW846 8015C

F77899-1, F77899-2, F77899-4, F77899-5, F77899-6, F77899-7, F77899-8, F77899-9, F77899-10, F77899-11, F77899-12, F77899-13, F77899-14, F77899-15, F77899-16, F77899-17, F77899-18, F77899-19, F77899-20

CAS No.	Compound	Result	RL	MDL	Units	Q
	TPH-GRO (C6-C10)	ND	5.0	2.5	mg/kg	

CAS No.	Surrogate Recoveries		Limits
460-00-4	4-Bromofluorobenzene	80%	56-136%
98-08-8	aaa-Trifluorotoluene	75%	61-121%

Method Blank Summary

Job Number: F77899
Account: TETTNOAK Tetra Tech, Inc
Project: Holloman AFB; Alamogordo, NM

Sample	File ID	DF	Analyzed	By	Prep Date	Prep Batch	Analytical Batch
GQR2467-MB	QR056676.D	1	11/15/10	AH	n/a	n/a	GQR2467

The QC reported here applies to the following samples: **Method:** SW846 8015C

F77899-3, F77899-21, F77899-22

CAS No.	Compound	Result	RL	MDL	Units	Q
	TPH-GRO (C6-C10)	ND	5.0	2.5	mg/kg	

CAS No.	Surrogate Recoveries		Limits
460-00-4	4-Bromofluorobenzene	77%	56-136%
98-08-8	aaa-Trifluorotoluene	75%	61-121%

Blank Spike Summary

Job Number: F77899
Account: TETTNOAK Tetra Tech, Inc
Project: Holloman AFB; Alamogordo, NM

Sample	File ID	DF	Analyzed	By	Prep Date	Prep Batch	Analytical Batch
GQR2466-BS	QR056637.D	1	11/12/10	AH	n/a	n/a	GQR2466

The QC reported here applies to the following samples: **Method:** SW846 8015C

F77899-1, F77899-2, F77899-4, F77899-5, F77899-6, F77899-7, F77899-8, F77899-9, F77899-10, F77899-11, F77899-12, F77899-13, F77899-14, F77899-15, F77899-16, F77899-17, F77899-18, F77899-19, F77899-20

CAS No.	Compound	Spike mg/kg	BSP mg/kg	BSP %	Limits
	TPH-GRO (C6-C10)	20	17.9	90	74-121

CAS No.	Surrogate Recoveries	BSP	Limits
460-00-4	4-Bromofluorobenzene	88%	56-136%
98-08-8	aaa-Trifluorotoluene	96%	61-121%

Blank Spike Summary

Job Number: F77899
Account: TETTNOAK Tetra Tech, Inc
Project: Holloman AFB; Alamogordo, NM

Sample	File ID	DF	Analyzed	By	Prep Date	Prep Batch	Analytical Batch
GQR2467-BS	QR056675.D	1	11/15/10	AH	n/a	n/a	GQR2467

The QC reported here applies to the following samples: **Method:** SW846 8015C

F77899-3, F77899-21, F77899-22

CAS No.	Compound	Spike mg/kg	BSP mg/kg	BSP %	Limits
	TPH-GRO (C6-C10)	20	21.1	106	74-121

CAS No.	Surrogate Recoveries	BSP	Limits
460-00-4	4-Bromofluorobenzene	99%	56-136%
98-08-8	aaa-Trifluorotoluene	102%	61-121%

Matrix Spike/Matrix Spike Duplicate Summary

Job Number: F77899
Account: TETTNOAK Tetra Tech, Inc
Project: Holloman AFB; Alamogordo, NM

Sample	File ID	DF	Analyzed	By	Prep Date	Prep Batch	Analytical Batch
F77899-1MS	QR056667.D	1	11/13/10	AH	n/a	n/a	GQR2466
F77899-1MSD	QR056668.D	1	11/13/10	AH	n/a	n/a	GQR2466
F77899-1	QR056643.D	1	11/12/10	AH	n/a	n/a	GQR2466

The QC reported here applies to the following samples: **Method:** SW846 8015C

F77899-1, F77899-2, F77899-4, F77899-5, F77899-6, F77899-7, F77899-8, F77899-9, F77899-10, F77899-11, F77899-12, F77899-13, F77899-14, F77899-15, F77899-16, F77899-17, F77899-18, F77899-19, F77899-20

CAS No.	Compound	F77899-1 mg/kg	Q	Spike mg/kg	MS mg/kg	MS %	MSD mg/kg	MSD %	RPD	Limits Rec/RPD
	TPH-GRO (C6-C10)	ND		31.6	29.7	94	29.2	92	2	74-121/17

CAS No.	Surrogate Recoveries	MS	MSD	F77899-1	Limits
460-00-4	4-Bromofluorobenzene	101%	94%	89%	56-136%
98-08-8	aaa-Trifluorotoluene	106%	104%	80%	61-121%

Matrix Spike/Matrix Spike Duplicate Summary

Job Number: F77899
Account: TETTNOAK Tetra Tech, Inc
Project: Holloman AFB; Alamogordo, NM

Sample	File ID	DF	Analyzed	By	Prep Date	Prep Batch	Analytical Batch
F77899-3MS	QR056678.D	1	11/15/10	AH	n/a	n/a	GQR2467
F77899-3MSD	QR056679.D	1	11/15/10	AH	n/a	n/a	GQR2467
F77899-3	QR056677.D	1	11/15/10	AH	n/a	n/a	GQR2467

The QC reported here applies to the following samples: **Method:** SW846 8015C

F77899-3, F77899-21, F77899-22

CAS No.	Compound	F77899-3 mg/kg	Q	Spike mg/kg	MS mg/kg	MS %	MSD mg/kg	MSD %	RPD	Limits Rec/RPD
	TPH-GRO (C6-C10)	ND		24.8	24.1	97	24.0	97	0	74-121/17

CAS No.	Surrogate Recoveries	MS	MSD	F77899-3	Limits
460-00-4	4-Bromofluorobenzene	97%	103%	85%	56-136%
98-08-8	aaa-Trifluorotoluene	101%	107%	81%	61-121%

Volatile Surrogate Recovery Summary

Job Number: F77899
Account: TETTNOAK Tetra Tech, Inc
Project: Holloman AFB; Alamogordo, NM

Method: SW846 8015C **Matrix:** SO

Samples and QC shown here apply to the above method

Lab Sample ID	Lab File ID	S1 [a]	S2 [a]
F77899-1	QR056643.D	89.0	80.0
F77899-2	QR056644.D	89.0	84.0
F77899-3	QR056677.D	85.0	81.0
F77899-4	QR056646.D	83.0	77.0
F77899-5	QR056649.D	85.0	81.0
F77899-6	QR056650.D	84.0	80.0
F77899-7	QR056651.D	88.0	81.0
F77899-8	QR056652.D	86.0	77.0
F77899-9	QR056653.D	85.0	78.0
F77899-10	QR056654.D	86.0	78.0
F77899-11	QR056655.D	85.0	79.0
F77899-12	QR056656.D	90.0	80.0
F77899-13	QR056657.D	88.0	77.0
F77899-14	QR056660.D	87.0	78.0
F77899-15	QR056661.D	89.0	77.0
F77899-16	QR056662.D	90.0	81.0
F77899-17	QR056663.D	88.0	77.0
F77899-18	QR056664.D	87.0	79.0
F77899-19	QR056665.D	85.0	78.0
F77899-20	QR056666.D	87.0	80.0
F77899-21	QR056680.D	92.0	86.0
F77899-22	QR056681.D	89.0	83.0
F77899-1MS	QR056667.D	101.0	106.0
F77899-1MSD	QR056668.D	94.0	104.0
F77899-3MS	QR056678.D	97.0	101.0
F77899-3MSD	QR056679.D	103.0	107.0
GQR2466-BS	QR056637.D	88.0	96.0
GQR2466-MB	QR056638.D	80.0	75.0
GQR2467-BS	QR056675.D	99.0	102.0
GQR2467-MB	QR056676.D	77.0	75.0

Surrogate Compounds	Recovery Limits
S1 = 4-Bromofluorobenzene	56-136%
S2 = aaa-Trifluorotoluene	61-121%

(a) Recovery from GC signal #2

GC Surrogate Retention Time Summary

Job Number: F77899
Account: TETTNOAK Tetra Tech, Inc
Project: Holloman AFB; Alamogordo, NM

Check Std:	GQR2466-CC2454	**Injection Date:**	11/12/10
Lab File ID:	QR056636.D	**Injection Time:**	10:32
Instrument ID:	GCQR	**Method:**	SW846 8015C

	S1 [a] RT	S2 [a] RT
Check Std	14.97	9.53

Lab Sample ID	Lab File ID	Date Analyzed	Time Analyzed	S1 [a] RT	S2 [a] RT
GQR2466-BS	QR056637.D	11/12/10	10:59	14.97	9.53
GQR2466-MB	QR056638.D	11/12/10	11:25	14.97	9.53
F77899-1	QR056643.D	11/12/10	14:28	14.97	9.52
F77899-2	QR056644.D	11/12/10	14:55	14.97	9.53
F77899-4	QR056646.D	11/12/10	15:49	14.97	9.53

Surrogate Compounds

S1 = 4-Bromofluorobenzene
S2 = aaa-Trifluorotoluene

(a) Retention time from GC signal #2

GC Surrogate Retention Time Summary

Job Number: F77899
Account: TETTNOAK Tetra Tech, Inc
Project: Holloman AFB; Alamogordo, NM

Check Std:	GQR2466-CC2454	**Injection Date:**	11/12/10
Lab File ID:	QR056647.D	**Injection Time:**	16:25
Instrument ID:	GCQR	**Method:**	SW846 8015C

	S1 [a] RT	S2 [a] RT
Check Std	14.96	9.52

Lab Sample ID	Lab File ID	Date Analyzed	Time Analyzed	S1 [a] RT	S2 [a] RT
F77899-5	QR056649.D	11/12/10	17:18	14.96	9.52
F77899-6	QR056650.D	11/12/10	17:45	14.96	9.52
F77899-7	QR056651.D	11/12/10	18:12	14.96	9.53
F77899-8	QR056652.D	11/12/10	18:39	14.96	9.52
F77899-9	QR056653.D	11/12/10	19:05	14.96	9.53
F77899-10	QR056654.D	11/12/10	19:32	14.97	9.53
F77899-11	QR056655.D	11/12/10	19:59	14.97	9.53
F77899-12	QR056656.D	11/12/10	20:26	14.97	9.52
F77899-13	QR056657.D	11/12/10	20:52	14.96	9.52

Surrogate Compounds

S1 = 4-Bromofluorobenzene
S2 = aaa-Trifluorotoluene

(a) Retention time from GC signal #2

GC Surrogate Retention Time Summary

Job Number: F77899
Account: TETTNOAK Tetra Tech, Inc
Project: Holloman AFB; Alamogordo, NM

Check Std:	GQR2466-CC2454	**Injection Date:**	11/12/10
Lab File ID:	QR056658.D	**Injection Time:**	21:19
Instrument ID:	GCQR	**Method:**	SW846 8015C

	S1 [a] RT	S1 [b] RT	S2 [a] RT	S2 [b] RT
Check Std	14.96	14.96	9.52	9.52

Lab Sample ID	Lab File ID	Date Analyzed	Time Analyzed	S1 [a] RT	S1 [b] RT	S2 [a] RT	S2 [b] RT
F77899-14	QR056660.D	11/12/10	22:13		14.97		9.53
F77899-15	QR056661.D	11/12/10	22:40		14.96		9.53
F77899-16	QR056662.D	11/12/10	23:07		14.97		9.52
F77899-17	QR056663.D	11/12/10	23:34		14.97		9.52
F77899-18	QR056664.D	11/13/10	00:01		14.96		9.52
F77899-19	QR056665.D	11/13/10	00:28		14.96		9.52
F77899-20	QR056666.D	11/13/10	00:54		14.96		9.52
F77899-1MS	QR056667.D	11/13/10	01:21		14.97		9.53
F77899-1MSD	QR056668.D	11/13/10	01:48		14.96		9.53
GQR2466-ECC2454	QR056669.D	11/13/10	02:15	14.97	14.97	9.52	9.52

Surrogate Compounds

S1 = 4-Bromofluorobenzene
S2 = aaa-Trifluorotoluene

(a) Retention time from GC signal #1
(b) Retention time from GC signal #2

GC Surrogate Retention Time Summary

Job Number: F77899
Account: TETTNOAK Tetra Tech, Inc
Project: Holloman AFB; Alamogordo, NM

Check Std:	GQR2467-CC2454	**Injection Date:**	11/15/10
Lab File ID:	QR056674.D	**Injection Time:**	10:31
Instrument ID:	GCQR	**Method:**	SW846 8015C

	S1 [a] RT	S2 [a] RT
Check Std	14.97	9.52

Lab Sample ID	Lab File ID	Date Analyzed	Time Analyzed	S1 [a] RT	S2 [a] RT
GQR2467-BS	QR056675.D	11/15/10	10:58	14.96	9.52
GQR2467-MB	QR056676.D	11/15/10	11:24	14.96	9.52
F77899-3	QR056677.D	11/15/10	11:51	14.96	9.52
F77899-3MS	QR056678.D	11/15/10	12:18	14.96	9.52
F77899-3MSD	QR056679.D	11/15/10	12:45	14.96	9.51
F77899-21	QR056680.D	11/15/10	13:41	14.97	9.52
F77899-22	QR056681.D	11/15/10	14:07	14.96	9.51

Surrogate Compounds

S1 = 4-Bromofluorobenzene
S2 = aaa-Trifluorotoluene

(a) Retention time from GC signal #2

Initial Calibration Summary

Job Number: F77899
Account: TETTNOAK Tetra Tech, Inc
Project: Holloman AFB; Alamogordo, NM

Sample: GQR2454-ICC2454
Lab FileID: QR056404.D

```
                         Response Factor Report  VOA3

  Method       : C:\HPCHEM\1\METHODS\8015S-QR.M (Chemstation Integrator)
  Title        : SW846 8015 TPH by GC-FID
  Last Update  : Mon Oct 25 14:59:19 2010
  Response via : Initial Calibration

  Calibration Files
  1   =QR056401.D  2   =QR056402.D  3   =QR056403.D  4   =QR056404.D
  5      =QR056405.D   6      =QR056406.D

        Compound              1     2     3     4     5     6     Avg    %RSD
  ---------------------------------------------------------------------------
  1) S   a,a,a-TFT           7.323 7.539 8.271 8.897 9.272 9.915 8.536 E2  11.84
  2) S   BFB                 2.145 2.200 2.258 2.271 2.319 2.280 2.245 E3   2.78

Signal #2

  4) S   a,a,a-TFT #2        3.038 3.340 3.655 3.999 4.478 4.748 3.876 E4  17.01
  5)  S  BFB #2              1.925 2.005 2.231 2.583 2.294 2.237 2.212 E4  10.51
  6) H   TPH-GRO (C6-C10)    4.394 3.967 3.652 3.464 3.449 3.304 3.705 E4  11.00
             ---- Linear regression ----  Coefficient =  0.9990
               Response Ratio = 1521927.26013 + 32006.61554 *A

 ---------------------------------------------------------------------------
 (#) = Out of Range

           8015S-QR.M        Tue Oct 26 15:25:51 2010
```

Initial Calibration Verification

Job Number: F77899
Account: TETTNOAK Tetra Tech, Inc
Project: Holloman AFB; Alamogordo, NM

Sample: GQR2454-ICV2454
Lab FileID: QR056407.D

Evaluate Continuing Calibration Report

```
Signal #1 : C:\HPCHEM\1\DATA\102510\QR056407.D\FID1B.CH  Vial: 11
Signal #2 : C:\HPCHEM\1\DATA\102510\QR056407.D\FID2A.CH
Acq On    : 25 Oct 2010   2:48 pm                    Operator: ArielH
Sample    : icv2454-3                                Inst    : VOA3
Misc      : gc11537,gqr2454,5.00,,100,5.0,,soil      Multiplr: 1.00
IntFile Signal #1: PID.E        IntFile Signal #2: events2.e

Method       : C:\HPCHEM\1\METHODS\8015S-QR.M (Chemstation Integrator)
Title        : SW846 8015 TPH by GC-FID
Last Update  : Mon Oct 25 14:59:19 2010
Response via : Multiple Level Calibration

Min. RRF     :   0.000  Min. Rel. Area :  50%  Max. R.T. Dev  0.10min
Max. RRF Dev :  15%     Max. Rel. Area : 150%
```

	Compound	Amount	Calc.	%Drift	Area%	Dev(min)	RT Window
1 S	a,a,a-TFT	20.000	18.580	7.1	96	0.00	9.42- 9.62
2 S	BFB	20.000	19.717	1.4	98	-0.01	14.86-15.06
*****	Signal #2 *****						
4 S	a,a,a-TFT #2	20.000	19.695	1.5	104	0.00	9.42- 9.62
5 S	BFB #2	20.000	18.810	6.0	93	-0.01	14.86-15.06
6 H	TPH-GRO (C6-C10)	400.000	386.556	3.4	95	0.00	4.95-16.63

(#) = Out of Range SPCC's out = 0 CCC's out = 0
QR056403.D 8015S-QR.M Tue Oct 26 15:25:21 2010

Continuing Calibration Summary

Job Number: F77899
Account: TETTNOAK Tetra Tech, Inc
Project: Holloman AFB; Alamogordo, NM

Sample: GQR2466-CC2454
Lab FileID: QR056636.D

Evaluate Continuing Calibration Report

```
Signal #1 : C:\HPCHEM\1\DATA\111210\QR056636.D\FID1B.CH  Vial: 4
Signal #2 : C:\HPCHEM\1\DATA\111210\QR056636.D\FID2A.CH
Acq On    : 12 Nov 2010  10:32 am                    Operator: ArielH
Sample    : cc2454-4                                 Inst    : VOA3
Misc      : gc11605,gqr2466,5.00,,100,5.0,,soil      Multiplr: 1.00
IntFile Signal #1: PID.E        IntFile Signal #2: events2.e

Method       : C:\HPCHEM\1\METHODS\8015S-QR.M (Chemstation Integrator)
Title        : SW846 8015 TPH by GC-FID
Last Update  : Mon Oct 25 14:59:19 2010
Response via : Multiple Level Calibration

Min. RRF     :   0.000  Min. Rel. Area :  50%  Max. R.T. Dev  0.10min
Max. RRF Dev :  15%     Max. Rel. Area : 150%
```

	Compound	Amount	Calc.	%Drift	Area%	Dev(min)	RT Window
1 S	a,a,a-TFT	20.000	19.814	0.9	95	0.00	9.42- 9.62
2 S	BFB	20.000	19.753	1.2	98	0.00	14.86-15.06
*****	Signal #2 *****						
4 S	a,a,a-TFT #2	20.000	21.354	-6.8	104	0.00	9.42- 9.62
5 S	BFB #2	20.000	19.564	2.2	84	0.00	14.86-15.06
6 H	TPH-GRO (C6-C10)	600.000	572.741	4.5	96	0.00	4.95-16.63

(#) = Out of Range SPCC's out = 0 CCC's out = 0
QR056404.D 8015S-QR.M Tue Nov 16 11:04:26 2010

Continuing Calibration Summary

Job Number: F77899
Account: TETTNOAK Tetra Tech, Inc
Project: Holloman AFB; Alamogordo, NM

Sample: GQR2466-CC2454
Lab FileID: QR056647.D

Evaluate Continuing Calibration Report

```
Signal #1 : C:\HPCHEM\1\DATA\111210\QR056647.D\FID1B.CH  Vial: 15
Signal #2 : C:\HPCHEM\1\DATA\111210\QR056647.D\FID2A.CH
Acq On    : 12 Nov 2010   4:25 pm                    Operator: ArielH
Sample    : cc2454-3                                 Inst    : VOA3
Misc      : gc11605,gqr2466,5.00,,100,5.0,,soil      Multiplr: 1.00
IntFile Signal #1: PID.E        IntFile Signal #2: events2.e

Method       : C:\HPCHEM\1\METHODS\8015S-QR.M (Chemstation Integrator)
Title        : SW846 8015 TPH by GC-FID
Last Update  : Mon Oct 25 14:59:19 2010
Response via : Multiple Level Calibration

Min. RRF     :   0.000  Min. Rel. Area :  50%  Max. R.T. Dev  0.10min
Max. RRF Dev :  15%     Max. Rel. Area : 150%
```

	Compound	Amount	Calc.	%Drift	Area%	Dev(min)	RT Window
1 S	a,a,a-TFT	20.000	19.869	0.7	103	0.00	9.42- 9.62
2 S	BFB	20.000	20.347	-1.7	101	0.00	14.86-15.06
*****	Signal #2 *****						
4 S	a,a,a-TFT #2	20.000	20.014	-0.1	106	0.00	9.42- 9.62
5 S	BFB #2	20.000	19.177	4.1	95	0.00	14.86-15.06
6 H	TPH-GRO (C6-C10)	400.000	434.306	-8.6	106	0.00	4.95-16.63

(#) = Out of Range SPCC's out = 0 CCC's out = 0
QR056403.D 8015S-QR.M Tue Nov 16 11:04:52 2010

Continuing Calibration Summary

Job Number: F77899
Account: TETTNOAK Tetra Tech, Inc
Project: Holloman AFB; Alamogordo, NM

Sample: GQR2466-CC2454
Lab FileID: QR056658.D

```
                    Evaluate Continuing Calibration Report

 Signal #1 : C:\HPCHEM\1\DATA\111210\QR056658.D\FID1B.CH  Vial: 26
 Signal #2 : C:\HPCHEM\1\DATA\111210\QR056658.D\FID2A.CH
 Acq On    : 12 Nov 2010   9:19 pm                    Operator: ArielH
 Sample    : cc2454-3                                 Inst    : VOA3
 Misc      : gc11605,gqr2466,5.00,,100,5.0,,soil      Multiplr: 1.00
 IntFile Signal #1: PID.E        IntFile Signal #2: events2.e

 Method       : C:\HPCHEM\1\METHODS\8015S-QR.M (Chemstation Integrator)
 Title        : SW846 8015 TPH by GC-FID
 Last Update  : Mon Oct 25 14:59:19 2010
 Response via : Multiple Level Calibration

 Min. RRF     :   0.000  Min. Rel. Area :  50%  Max. R.T. Dev  0.10min
 Max. RRF Dev :  15%     Max. Rel. Area : 150%

        Compound                Amount  Calc.    %Drift Area% Dev(min)RT Window
 ---------------------------------------------------------------------------
 1 S   a,a,a-TFT               20.000  18.846      5.8   97   0.00    9.42- 9.62
 2 S   BFB                     20.000  19.761      1.2   98   0.00   14.86-15.06

*****  Signal #2   *****

 4 S   a,a,a-TFT #2            20.000  19.068      4.7  101   0.00    9.42- 9.62
 5  S  BFB #2                  20.000  19.511      2.4   97   0.00   14.86-15.06
 6 H   TPH-GRO (C6-C10)       400.000 369.416      7.6   91   0.00    4.95-16.63
-------------------------------------------------------------------------------
-------------------------------------------------------------------------------

   (#) = Out of Range              SPCC's out = 0  CCC's out = 0
    QR056403.D 8015S-QR.M       Tue Nov 16 11:04:52 2010
```

Continuing Calibration Summary

Job Number: F77899
Account: TETTNOAK Tetra Tech, Inc
Project: Holloman AFB; Alamogordo, NM

Sample: GQR2466-ECC2454
Lab FileID: QR056669.D

```
                    Evaluate Continuing Calibration Report

 Signal #1 : C:\HPCHEM\1\DATA\111210\QR056669.D\FID1B.CH  Vial: 37
 Signal #2 : C:\HPCHEM\1\DATA\111210\QR056669.D\FID2A.CH
 Acq On    : 13 Nov 2010   2:15 am                    Operator: ArielH
 Sample    : ECC2454-3                                Inst    : VOA3
 Misc      : gc11605,gqr2466,5.00,,100,5.0,,soil      Multiplr: 1.00
 IntFile Signal #1: PID.E        IntFile Signal #2: events2.e

 Method       : C:\HPCHEM\1\METHODS\8015S-QR.M (Chemstation Integrator)
 Title        : SW846 8015 TPH by GC-FID
 Last Update  : Mon Oct 25 14:59:19 2010
 Response via : Multiple Level Calibration

 Min. RRF     :   0.000  Min. Rel. Area :  50%  Max. R.T. Dev  0.10min
 Max. RRF Dev :  15%     Max. Rel. Area : 150%

        Compound                Amount  Calc.    %Drift Area% Dev(min)RT Window
 ---------------------------------------------------------------------------
 1 S   a,a,a-TFT               20.000  18.505      7.5   95   0.00    9.42- 9.62
 2 S   BFB                     20.000  19.573      2.1   97   0.00   14.86-15.06

*****  Signal #2   *****

 4 S   a,a,a-TFT #2            20.000  19.508      2.5  103   0.00    9.42- 9.62
 5  S  BFB #2                  20.000  19.901      0.5   99   0.00   14.86-15.06
 6 H   TPH-GRO (C6-C10)       400.000 354.230     11.4   88   0.00    4.95-16.63
---------------------------------------------------------------------------
---------------------------------------------------------------------------

   (#) = Out of Range              SPCC's out = 0  CCC's out = 0
    QR056403.D 8015S-QR.M       Tue Nov 16 11:04:53 2010
```

Continuing Calibration Summary

Job Number: F77899
Account: TETTNOAK Tetra Tech, Inc
Project: Holloman AFB; Alamogordo, NM

Sample: GQR2467-CC2454
Lab FileID: QR056674.D

```
                    Evaluate Continuing Calibration Report

 Signal #1 : C:\HPCHEM\1\DATA\111510\QR056674.D\FID1B.CH  Vial: 4
 Signal #2 : C:\HPCHEM\1\DATA\111510\QR056674.D\FID2A.CH
 Acq On    : 15 Nov 2010  10:31 am                    Operator: ArielH
 Sample    : cc2454-4                                 Inst    : VOA3
 Misc      : gc11605,gqr2467,5.00,,100,5.0,,soil      Multiplr: 1.00
 IntFile Signal #1: PID.E        IntFile Signal #2: events2.e

 Method       : C:\HPCHEM\1\METHODS\8015S-QR.M (Chemstation Integrator)
 Title        : SW846 8015 TPH by GC-FID
 Last Update  : Mon Oct 25 14:59:19 2010
 Response via : Multiple Level Calibration

 Min. RRF     :   0.000  Min. Rel. Area :  50%  Max. R.T. Dev  0.10min
 Max. RRF Dev :  15%     Max. Rel. Area : 150%

        Compound                Amount  Calc.    %Drift Area% Dev(min)RT Window
 ---------------------------------------------------------------------------
 1 S   a,a,a-TFT               20.000  19.805      1.0   95   0.00    9.42- 9.62
 2 S   BFB                     20.000  19.371      3.1   96   0.00   14.86-15.06

*****  Signal #2   *****

 4 S   a,a,a-TFT #2            20.000  21.512     -7.6  104   0.00    9.42- 9.62
 5  S  BFB #2                  20.000  18.742      6.3   80   0.00   14.86-15.06
 6 H   TPH-GRO (C6-C10)       600.000 596.736      0.5   99   0.00    4.95-16.63
-----------------------------------------------------------------------------
-----------------------------------------------------------------------------

   (#) = Out of Range              SPCC's out = 0  CCC's out = 0
    QR056404.D 8015S-QR.M       Tue Nov 16 13:41:40 2010
```

Continuing Calibration Summary

Job Number: F77899
Account: TETTNOAK Tetra Tech, Inc
Project: Holloman AFB; Alamogordo, NM

Sample: GQR2467-CC2454
Lab FileID: QR056682.D

```
                    Evaluate Continuing Calibration Report

 Signal #1 : C:\HPCHEM\1\DATA\111510\QR056682.D\FID1B.CH  Vial: 12
 Signal #2 : C:\HPCHEM\1\DATA\111510\QR056682.D\FID2A.CH
 Acq On    : 15 Nov 2010   2:34 pm                    Operator: ArielH
 Sample    : cc2454-3                                 Inst    : VOA3
 Misc      : gc11605,gqr2467,5.00,,100,5.0,,soil      Multiplr: 1.00
 IntFile Signal #1: PID.E        IntFile Signal #2: events2.e

 Method       : C:\HPCHEM\1\METHODS\8015S-QR.M (Chemstation Integrator)
 Title        : SW846 8015 TPH by GC-FID
 Last Update  : Mon Oct 25 14:59:19 2010
 Response via : Multiple Level Calibration

 Min. RRF     :   0.000  Min. Rel. Area :  50%  Max. R.T. Dev  0.10min
 Max. RRF Dev :  15%     Max. Rel. Area : 150%

        Compound                Amount  Calc.    %Drift Area% Dev(min)RT Window
 ---------------------------------------------------------------------------
 1 S   a,a,a-TFT               20.000  19.142      4.3   99   0.00    9.42- 9.62
 2 S   BFB                     20.000  20.517     -2.6  102   0.00   14.86-15.06

*****  Signal #2   *****

 4 S   a,a,a-TFT #2            20.000  20.727     -3.6  110   0.00    9.42- 9.62
 5  S  BFB #2                  20.000  21.792     -9.0  108   0.00   14.86-15.06
 6 H   TPH-GRO (C6-C10)       400.000 455.936    -14.0  110   0.00    4.95-16.63
---------------------------------------------------------------------------
---------------------------------------------------------------------------

   (#) = Out of Range              SPCC's out = 0  CCC's out = 0
    QR056403.D 8015S-QR.M       Tue Nov 16 13:42:06 2010
```

6.6.8

6

Southeast ACCUTEST LABORATORIES

GC Semi-volatiles

QC Data Summaries

Includes the following where applicable:

- Method Blank Summaries
- Blank Spike Summaries
- Matrix Spike and Duplicate Summaries
- Surrogate Recovery Summaries
- GC Surrogate Retention Time Summaries
- Initial and Continuing Calibration Summaries

Method Blank Summary

Job Number: F77899
Account: TETTNOAK Tetra Tech, Inc
Project: Holloman AFB; Alamogordo, NM

Sample	File ID	DF	Analyzed	By	Prep Date	Prep Batch	Analytical Batch
OP35013-MB	YY18786.D	1	11/20/10	MV	11/11/10	OP35013	GYY677

The QC reported here applies to the following samples: **Method:** SW846 8015C

F77899-1, F77899-2, F77899-3, F77899-4, F77899-5, F77899-6, F77899-7, F77899-8, F77899-9, F77899-10, F77899-11, F77899-12, F77899-13, F77899-14, F77899-15, F77899-16, F77899-17

CAS No.	Compound	Result	RL	MDL	Units	Q
	TPH (C10-C28)	ND	8.3	3.3	mg/kg	

CAS No.	Surrogate Recoveries		Limits
84-15-1	o-Terphenyl	94%	49-108%

Method Blank Summary

Job Number: F77899
Account: TETTNOAK Tetra Tech, Inc
Project: Holloman AFB; Alamogordo, NM

Sample	File ID	DF	Analyzed	By	Prep Date	Prep Batch	Analytical Batch
OP35064-MB	YY18762.D	1	11/19/10	MV	11/16/10	OP35064	GYY677

The QC reported here applies to the following samples: **Method:** SW846 8015C

F77899-18, F77899-19, F77899-20

CAS No.	Compound	Result	RL	MDL	Units	Q
	TPH (C10-C28)	ND	8.3	3.3	mg/kg	

CAS No.	Surrogate Recoveries		Limits
84-15-1	o-Terphenyl	107%	49-108%

Method Blank Summary

Job Number: F77899
Account: TETTNOAK Tetra Tech, Inc
Project: Holloman AFB; Alamogordo, NM

Sample	File ID	DF	Analyzed	By	Prep Date	Prep Batch	Analytical Batch
OP35064-MB	YY18823.D	1	11/23/10	FEA	11/16/10	OP35064	GYY678

The QC reported here applies to the following samples: **Method:** SW846 8015C

F77899-18, F77899-19, F77899-20

CAS No.	Compound	Result	RL	MDL	Units	Q
	TPH (C10-C28)	ND	8.3	3.3	mg/kg	

CAS No.	Surrogate Recoveries		Limits
84-15-1	o-Terphenyl	123%*	49-108%

Blank Spike Summary

Job Number: F77899
Account: TETTNOAK Tetra Tech, Inc
Project: Holloman AFB; Alamogordo, NM

Sample	File ID	DF	Analyzed	By	Prep Date	Prep Batch	Analytical Batch
OP35013-BS	YY18785.D	1	11/20/10	MV	11/11/10	OP35013	GYY677

The QC reported here applies to the following samples: **Method:** SW846 8015C

F77899-1, F77899-2, F77899-3, F77899-4, F77899-5, F77899-6, F77899-7, F77899-8, F77899-9, F77899-10, F77899-11, F77899-12, F77899-13, F77899-14, F77899-15, F77899-16, F77899-17

CAS No.	Compound	Spike mg/kg	BSP mg/kg	BSP %	Limits
	TPH (C10-C28)	33.3	31.9	96	60-107

CAS No.	Surrogate Recoveries	BSP	Limits
84-15-1	o-Terphenyl	102%	49-108%

Blank Spike Summary

Job Number: F77899
Account: TETTNOAK Tetra Tech, Inc
Project: Holloman AFB; Alamogordo, NM

Sample	File ID	DF	Analyzed	By	Prep Date	Prep Batch	Analytical Batch
OP35064-BS	YY18761.D	1	11/19/10	MV	11/16/10	OP35064	GYY677

The QC reported here applies to the following samples: **Method:** SW846 8015C

F77899-18, F77899-19, F77899-20

CAS No.	Compound	Spike mg/kg	BSP mg/kg	BSP %	Limits
	TPH (C10-C28)	33.3	32.3	97	60-107

CAS No.	Surrogate Recoveries	BSP	Limits
84-15-1	o-Terphenyl	103%	49-108%

Matrix Spike/Matrix Spike Duplicate Summary

Job Number: F77899
Account: TETTNOAK Tetra Tech, Inc
Project: Holloman AFB; Alamogordo, NM

Sample	File ID	DF	Analyzed	By	Prep Date	Prep Batch	Analytical Batch
OP35013-MS	YY18798.D	1	11/20/10	MV	11/11/10	OP35013	GYY677
OP35013-MSD	YY18799.D	1	11/20/10	MV	11/11/10	OP35013	GYY677
F77899-3	YY18797.D	1	11/20/10	MV	11/11/10	OP35013	GYY677

The QC reported here applies to the following samples: **Method:** SW846 8015C

F77899-1, F77899-2, F77899-3, F77899-4, F77899-5, F77899-6, F77899-7, F77899-8, F77899-9, F77899-10, F77899-11, F77899-12, F77899-13, F77899-14, F77899-15, F77899-16, F77899-17

CAS No.	Compound	F77899-3 mg/kg	Q	Spike mg/kg	MS mg/kg	MS %	MSD mg/kg	MSD %	RPD	Limits Rec/RPD
	TPH (C10-C28)	ND		39.2	30.8	79	36.8	94	18	60-107/36

CAS No.	Surrogate Recoveries	MS	MSD	F77899-3	Limits
84-15-1	o-Terphenyl	86%	103%	93%	49-108%

Matrix Spike/Matrix Spike Duplicate Summary

Job Number: F77899
Account: TETTNOAK Tetra Tech, Inc
Project: Holloman AFB; Alamogordo, NM

Sample	File ID	DF	Analyzed	By	Prep Date	Prep Batch	Analytical Batch
OP35064-MS	YY18774.D	1	11/19/10	MV	11/16/10	OP35064	GYY677
OP35064-MSD	YY18775.D	1	11/19/10	MV	11/16/10	OP35064	GYY677
F78053-4	YY18773.D	1	11/19/10	MV	11/16/10	OP35064	GYY677

The QC reported here applies to the following samples: **Method:** SW846 8015C

F77899-18, F77899-19, F77899-20

CAS No.	Compound	F78053-4 mg/kg	Q	Spike mg/kg	MS mg/kg	MS %	MSD mg/kg	MSD %	RPD	Limits Rec/RPD
	TPH (C10-C28)	ND		35.7	32.5	91	31.0	87	5	60-107/36

CAS No.	Surrogate Recoveries	MS	MSD	F78053-4	Limits
84-15-1	o-Terphenyl	98%	97%	90%	49-108%

Semivolatile Surrogate Recovery Summary

Job Number: F77899
Account: TETTNOAK Tetra Tech, Inc
Project: Holloman AFB; Alamogordo, NM

Method: SW846 8015C **Matrix:** SO

Samples and QC shown here apply to the above method

Lab Sample ID	Lab File ID	S1 [a]
F77899-1	YY18790.D	91.0
F77899-2	YY18791.D	94.0
F77899-3	YY18797.D	93.0
F77899-4	YY18792.D	88.0
F77899-5	YY18793.D	88.0
F77899-6	YY18794.D	92.0
F77899-7	YY18800.D	87.0
F77899-8	YY18801.D	88.0
F77899-9	YY18802.D	96.0
F77899-10	YY18803.D	85.0
F77899-11	YY18804.D	96.0
F77899-12	YY18805.D	96.0
F77899-13	YY18809.D	81.0
F77899-14	YY18810.D	88.0
F77899-15	YY18811.D	89.0
F77899-16	YY18812.D	86.0
F77899-17	YY18813.D	96.0
F77899-18	YY18763.D	93.0
F77899-19	YY18764.D	102.0
F77899-20	YY18765.D	96.0
OP35013-BS	YY18785.D	102.0
OP35013-MB	YY18786.D	94.0
OP35013-MS	YY18798.D	86.0
OP35013-MSD	YY18799.D	103.0
OP35064-BS	YY18761.D	103.0
OP35064-MB	YY18762.D	107.0
OP35064-MB	YY18823.D	123.0*
OP35064-MS	YY18774.D	98.0
OP35064-MSD	YY18775.D	97.0

Surrogate Compounds	Recovery Limits
S1 = o-Terphenyl	49-108%

(a) Recovery from GC signal #1

GC Surrogate Retention Time Summary

Job Number: F77899
Account: TETTNOAK Tetra Tech, Inc
Project: Holloman AFB; Alamogordo, NM

Check Std:	GYY677-CC628	**Injection Date:**	11/19/10
Lab File ID:	YY18759.D	**Injection Time:**	13:30
Instrument ID:	GCYY	**Method:**	SW846 8015C

	S1 [a] **RT**
Check Std	5.93

Lab Sample ID	**Lab File ID**	**Date Analyzed**	**Time Analyzed**	**S1** [a] **RT**
OP35064-BS	YY18761.D	11/19/10	14:27	5.93
OP35064-MB	YY18762.D	11/19/10	14:52	5.93
F77899-18	YY18763.D	11/19/10	15:17	5.93
F77899-19	YY18764.D	11/19/10	15:42	5.93
F77899-20	YY18765.D	11/19/10	16:07	5.93
ZZZZZZ	YY18768.D	11/19/10	17:23	5.93
ZZZZZZ	YY18769.D	11/19/10	17:48	5.93
ZZZZZZ	YY18770.D	11/19/10	18:13	5.93

Surrogate Compounds

S1 = o-Terphenyl

(a) Retention time from GC signal #1

GC Surrogate Retention Time Summary

Job Number: F77899
Account: TETTNOAK Tetra Tech, Inc
Project: Holloman AFB; Alamogordo, NM

Check Std:	GYY677-CC628	**Injection Date:**	11/19/10
Lab File ID:	YY18771.D	**Injection Time:**	18:38
Instrument ID:	GCYY	**Method:**	SW846 8015C

	S1 [a] **RT**
Check Std	5.93

Lab Sample ID	**Lab File ID**	**Date Analyzed**	**Time Analyzed**	**S1** [a] **RT**
F78053-4	YY18773.D	11/19/10	19:28	5.93
OP35064-MS	YY18774.D	11/19/10	19:53	5.93
OP35064-MSD	YY18775.D	11/19/10	20:19	5.93
ZZZZZZ	YY18776.D	11/19/10	20:44	5.93
ZZZZZZ	YY18777.D	11/19/10	21:09	5.93
ZZZZZZ	YY18778.D	11/19/10	21:34	5.93
ZZZZZZ	YY18779.D	11/19/10	21:59	5.93
ZZZZZZ	YY18780.D	11/19/10	22:24	5.93
GYY677-RT	YY18782.D	11/19/10	23:14	5.94

Surrogate Compounds

S1 = o-Terphenyl

(a) Retention time from GC signal #1

GC Surrogate Retention Time Summary

Job Number: F77899
Account: TETTNOAK Tetra Tech, Inc
Project: Holloman AFB; Alamogordo, NM

Check Std:	GYY677-CC628	**Injection Date:**	11/19/10
Lab File ID:	YY18783.D	**Injection Time:**	23:39
Instrument ID:	GCYY	**Method:**	SW846 8015C

	S1 [a] **RT**
Check Std	5.94

Lab Sample ID	**Lab File ID**	**Date Analyzed**	**Time Analyzed**	**S1** [a] **RT**
OP35013-BS	YY18785.D	11/20/10	00:29	5.94
OP35013-MB	YY18786.D	11/20/10	00:54	5.93
ZZZZZZ	YY18787.D	11/20/10	01:19	5.93
ZZZZZZ	YY18788.D	11/20/10	01:44	5.93
ZZZZZZ	YY18789.D	11/20/10	02:08	5.93
F77899-1	YY18790.D	11/20/10	02:33	5.93
F77899-2	YY18791.D	11/20/10	02:59	5.93
F77899-4	YY18792.D	11/20/10	03:23	5.93
F77899-5	YY18793.D	11/20/10	03:48	5.93
F77899-6	YY18794.D	11/20/10	04:13	5.93

Surrogate Compounds

S1 = o-Terphenyl

(a) Retention time from GC signal #1

GC Surrogate Retention Time Summary

Job Number: F77899
Account: TETTNOAK Tetra Tech, Inc
Project: Holloman AFB; Alamogordo, NM

Check Std:	GYY677-CC628	**Injection Date:**	11/20/10
Lab File ID:	YY18795.D	**Injection Time:**	04:38
Instrument ID:	GCYY	**Method:**	SW846 8015C

	S1 [a] **RT**
Check Std	5.93

Lab Sample ID	**Lab File ID**	**Date Analyzed**	**Time Analyzed**	**S1** [a] **RT**
F77899-3	YY18797.D	11/20/10	05:28	5.93
OP35013-MS	YY18798.D	11/20/10	05:53	5.93
OP35013-MSD	YY18799.D	11/20/10	06:18	5.93
F77899-7	YY18800.D	11/20/10	06:43	5.93
F77899-8	YY18801.D	11/20/10	07:08	5.93
F77899-9	YY18802.D	11/20/10	07:33	5.93
F77899-10	YY18803.D	11/20/10	07:57	5.93
F77899-11	YY18804.D	11/20/10	08:22	5.93
F77899-12	YY18805.D	11/20/10	08:47	5.93
GYY677-RT	YY18806.D	11/20/10	09:12	5.93

Surrogate Compounds

S1 = o-Terphenyl

(a) Retention time from GC signal #1

GC Surrogate Retention Time Summary

Job Number: F77899
Account: TETTNOAK Tetra Tech, Inc
Project: Holloman AFB; Alamogordo, NM

Check Std:	GYY677-CC628	**Injection Date:**	11/20/10
Lab File ID:	YY18807.D	**Injection Time:**	09:37
Instrument ID:	GCYY	**Method:**	SW846 8015C

	S1 [a] **RT**
Check Std	5.92

Lab Sample ID	**Lab File ID**	**Date Analyzed**	**Time Analyzed**	**S1** [a] **RT**
F77899-13	YY18809.D	11/20/10	10:27	5.93
F77899-14	YY18810.D	11/20/10	10:52	5.93
F77899-15	YY18811.D	11/20/10	11:17	5.93
F77899-16	YY18812.D	11/20/10	11:42	5.93
F77899-17	YY18813.D	11/20/10	12:07	5.93
ZZZZZZ	YY18814.D	11/20/10	12:32	5.92
ZZZZZZ	YY18815.D	11/20/10	12:57	5.92
ZZZZZZ	YY18816.D	11/20/10	13:22	0.00
ZZZZZZ	YY18817.D	11/20/10	13:47	5.93
ZZZZZZ	YY18818.D	11/20/10	14:12	5.93
GYY677-ECC628	YY18819.D	11/20/10	14:37	5.94

Surrogate Compounds

S1 = o-Terphenyl

(a) Retention time from GC signal #1

GC Surrogate Retention Time Summary

Job Number: F77899
Account: TETTNOAK Tetra Tech, Inc
Project: Holloman AFB; Alamogordo, NM

Check Std:	GYY678-CC628	**Injection Date:**	11/23/10
Lab File ID:	YY18821.D	**Injection Time:**	08:40
Instrument ID:	GCYY	**Method:**	SW846 8015C

	S1 [a] **RT**
Check Std	5.93

Lab Sample ID	**Lab File ID**	**Date Analyzed**	**Time Analyzed**	**S1** [a] **RT**
OP35064-MB	YY18823.D	11/23/10	09:42	5.94
ZZZZZZ	YY18825.D	11/23/10	10:33	0.00
ZZZZZZ	YY18826.D	11/23/10	10:58	5.93
ZZZZZZ	YY18828.D	11/23/10	11:48	5.93
GYY678-RT	YY18830.D	11/23/10	12:38	5.94
GYY678-ECC628	YY18831.D	11/23/10	13:09	5.93

Surrogate Compounds

S1 = o-Terphenyl

(a) Retention time from GC signal #1

Initial Calibration Summary

Job Number: F77899
Account: TETTNOAK Tetra Tech, Inc
Project: Holloman AFB; Alamogordo, NM

Sample: GYY628-ICC628
Lab FileID: YY17278.D

Response Factor Report FID 5

Method : C:\MSDCHEM\2\METHODS\F_DRO.M (Chemstation Integrator)
Title : TPH by SW846 8015B
Last Update : Wed Sep 01 08:29:19 2010
Response via : Initial Calibration

Calibration Files
200 =YY17276.D 500 =YY17277.D 1000=YY17278.D 2000=YY17279.D
3000 =YY17280.D 4000 =YY17281.D

Compound	200	500	1000	2000	3000	4000	Avg	%RSD
1) S O-TERPHENYL	9.794	8.728	9.355	9.046	8.982	9.800	9.284 E4	4.79
2) H TPH (C10-C28)	8.621	8.578	8.981	8.438	8.381	8.956	8.659 E4	2.95

(#) = Out of Range

F_DRO.M Thu Sep 02 10:27:33 2010

Initial Calibration Verification

Job Number: F77899
Account: TETTNOAK Tetra Tech, Inc
Project: Holloman AFB; Alamogordo, NM

Sample: GYY628-ICV628
Lab FileID: YY17282.D

Evaluate Continuing Calibration Report

```
Data File : C:\MSDCHEM\2\DATA\0831DRO\YY17282.D          Vial: 8
Acq On    : 31 Aug 2010  12:16 pm                    Operator: neilc1
Sample    : icv628-1000                              Inst    : FID 5
Misc      : OP34131,gyy628,1000,,,1,1,water          Multiplr: 1.00
IntFile   : events.e

Method       : C:\MSDCHEM\2\METHODS\F_DRO.M (Chemstation Integrator)
Title        : TPH by SW846 8015B
Last Update  : Wed Sep 01 08:29:19 2010
Response via : Multiple Level Calibration

Min. RRF     :   0.000  Min. Rel. Area :  50%  Max. R.T. Dev  0.50min
Max. RRF Dev :  15%     Max. Rel. Area : 150%

       Compound                Amount  Calc.    %Drift Area% Dev(min)RT Window
 ---------------------------------------------------------------------------
 1 S   O-TERPHENYL                        ----------NA----------
 2 H   TPH (C10-C28)          1000.000 961.844      3.8   93   0.00    3.03- 8.36
---------------------------------------------------------------------------
---------------------------------------------------------------------------

   (#) = Out of Range               SPCC's out = 0  CCC's out = 0
    YY17278.D  F_DRO.M          Thu Sep 02 10:26:52 2010
```

Continuing Calibration Summary

Job Number: F77899
Account: TETTNOAK Tetra Tech, Inc
Project: Holloman AFB; Alamogordo, NM

Sample: GYY677-CC628
Lab FileID: YY18759.D

Evaluate Continuing Calibration Report

```
Data File : C:\MSDCHEM\2\DATA\1119DRO\YY18759.D          Vial: 8
Acq On    : 11-19-10 01:30:50 PM                     Operator: marthav
Sample    : cc628-1000                               Inst    : FID 5
Misc      : op35064,gyy677,30.1,,,1,4,soil           Multiplr: 1.00
IntFile   : events.e

Method       : C:\MSDCHEM\2\METHODS\F_DRO.M (Chemstation Integrator)
Title        : TPH by SW846 8015C
Last Update  : Fri Nov 19 13:31:31 2010
Response via : Multiple Level Calibration

Min. RRF     :   0.000  Min. Rel. Area :  50%  Max. R.T. Dev  0.50min
Max. RRF Dev :  20%     Max. Rel. Area : 150%
```

	Compound	Amount	Calc.	%Drift	Area%	Dev(min)	RT Window
1 S	O-TERPHENYL	25.000	27.394	-9.6	109	0.00	5.88- 6.05
2 H	TPH (C10-C28)	1000.000	1085.846	-8.6	105	0.00	2.95- 8.36

(#) = Out of Range SPCC's out = 0 CCC's out = 0
YY17278.D F_DRO.M Mon Nov 22 10:59:31 2010

7.6.3

7

Continuing Calibration Summary

Job Number: F77899
Account: TETTNOAK Tetra Tech, Inc
Project: Holloman AFB; Alamogordo, NM

Sample: GYY677-CC628
Lab FileID: YY18771.D

Evaluate Continuing Calibration Report

```
Data File : C:\MSDCHEM\2\DATA\1119DRO\YY18771.D          Vial: 20
Acq On    : 11-19-10 06:38:40 PM                     Operator: marthav
Sample    : cc628-1000                               Inst    : FID 5
Misc      : op35064,gyy677,29.9,,,1,1,soil           Multiplr: 1.00
IntFile   : events.e

Method       : C:\MSDCHEM\2\METHODS\F_DRO.M (Chemstation Integrator)
Title        : TPH by SW846 8015C
Last Update  : Fri Nov 19 13:31:31 2010
Response via : Multiple Level Calibration

Min. RRF     :   0.000  Min. Rel. Area :  50%  Max. R.T. Dev  0.50min
Max. RRF Dev :  20%     Max. Rel. Area : 150%
```

	Compound	Amount	Calc.	%Drift	Area%	Dev(min)	RT Window
1 S	O-TERPHENYL	25.000	27.751	-11.0	110	0.00	5.88- 6.05
2 H	TPH (C10-C28)	1000.000	1097.716	-9.8	106	0.00	2.95- 8.36

(#) = Out of Range SPCC's out = 0 CCC's out = 0
YY17278.D F_DRO.M Mon Nov 22 10:59:32 2010

7.6.4

7

Continuing Calibration Summary

Job Number: F77899
Account: TETTNOAK Tetra Tech, Inc
Project: Holloman AFB; Alamogordo, NM

Sample: GYY677-CC628
Lab FileID: YY18783.D

Evaluate Continuing Calibration Report

```
Data File : C:\MSDCHEM\2\DATA\1119DRO\YY18783.D          Vial: 32
Acq On    : 19 Nov 2010  11:39 pm                    Operator: marthav
Sample    : cc628-1000                               Inst    : FID 5
Misc      : op35064,gyy677,30.0,,,1,1,soil           Multiplr: 1.00
IntFile   : events.e

Method       : C:\MSDCHEM\2\METHODS\F_DRO.M (Chemstation Integrator)
Title        : TPH by SW846 8015C
Last Update  : Fri Nov 19 13:31:31 2010
Response via : Multiple Level Calibration

Min. RRF     :   0.000  Min. Rel. Area :  50%  Max. R.T. Dev  0.50min
Max. RRF Dev :  20%     Max. Rel. Area : 150%
```

	Compound	Amount	Calc.	%Drift	Area%	Dev(min)	RT Window
1 S	O-TERPHENYL	25.000	28.108	-12.4	112	0.00	5.88- 6.05
2 H	TPH (C10-C28)	1000.000	1062.403	-6.2	102	0.00	2.95- 8.36

(#) = Out of Range SPCC's out = 0 CCC's out = 0
YY17278.D F_DRO.M Mon Nov 22 10:59:33 2010

7.6.5

7

Continuing Calibration Summary

Job Number: F77899
Account: TETTNOAK Tetra Tech, Inc
Project: Holloman AFB; Alamogordo, NM

Sample: GYY677-CC628
Lab FileID: YY18795.D

Evaluate Continuing Calibration Report

```
Data File : C:\MSDCHEM\2\DATA\1119DRO\YY18795.D          Vial: 44
Acq On    : 11-20-10 04:38:31 AM                     Operator: marthav
Sample    : cc628-1000                               Inst    : FID 5
Misc      : op35013,gyy677,30.4,,,1,1,soil           Multiplr: 1.00
IntFile   : events.e

Method       : C:\MSDCHEM\2\METHODS\F_DRO.M (Chemstation Integrator)
Title        : TPH by SW846 8015C
Last Update  : Fri Nov 19 13:31:31 2010
Response via : Multiple Level Calibration

Min. RRF     :   0.000  Min. Rel. Area :  50%  Max. R.T. Dev  0.50min
Max. RRF Dev :  20%     Max. Rel. Area : 150%
```

	Compound	Amount	Calc.	%Drift	Area%	Dev(min)	RT Window
1 S	O-TERPHENYL	25.000	27.018	-8.1	107	0.00	5.88- 6.05
2 H	TPH (C10-C28)	1000.000	1043.957	-4.4	101	0.00	2.95- 8.36

(#) = Out of Range SPCC's out = 0 CCC's out = 0
YY17278.D F_DRO.M Mon Nov 22 10:59:34 2010

7.6.6

7

Continuing Calibration Summary

Job Number: F77899
Account: TETTNOAK Tetra Tech, Inc
Project: Holloman AFB; Alamogordo, NM

Sample: GYY677-CC628
Lab FileID: YY18807.D

```
                    Evaluate Continuing Calibration Report

 Data File : C:\MSDCHEM\2\DATA\1119DRO\YY18807.D          Vial: 44
 Acq On    : 11-20-10 09:37:19 AM                     Operator: marthav
 Sample    : cc628-1000                               Inst    : FID 5
 Misc      : op35013,gyy677,30.3,,,1,1,soil           Multiplr: 1.00
 IntFile   : events.e

 Method       : C:\MSDCHEM\2\METHODS\F_DRO.M (Chemstation Integrator)
 Title        : TPH by SW846 8015C
 Last Update  : Fri Nov 19 13:31:31 2010
 Response via : Multiple Level Calibration

 Min. RRF     :   0.000  Min. Rel. Area :  50%  Max. R.T. Dev  0.50min
 Max. RRF Dev :  20%     Max. Rel. Area : 150%

        Compound                Amount  Calc.    %Drift Area% Dev(min)RT Window
 ---------------------------------------------------------------------------
 1 S   O-TERPHENYL             25.000  27.668    -10.7  110   0.00    5.88- 6.05
 2 H   TPH (C10-C28)          1000.000 1072.907     -7.3  103   0.00    2.95- 8.36
---------------------------------------------------------------------------
---------------------------------------------------------------------------

   (#) = Out of Range               SPCC's out = 0  CCC's out = 0
    YY17278.D  F_DRO.M          Mon Nov 22 10:59:35 2010
```

7.6.7

7

Continuing Calibration Summary

Job Number: F77899
Account: TETTNOAK Tetra Tech, Inc
Project: Holloman AFB; Alamogordo, NM

Sample: GYY677-ECC628
Lab FileID: YY18819.D

Evaluate Continuing Calibration Report

```
Data File : C:\MSDCHEM\2\DATA\1119DRO\YY18819.D          Vial: 68
Acq On    : 11-20-10 02:37:27 PM                     Operator: marthav
Sample    : ecc628-2000                              Inst    : FID 5
Misc      : op35064,gyy677,30.1,,,1,4,soil           Multiplr: 1.00
IntFile   : events.e

Method       : C:\MSDCHEM\2\METHODS\F_DRO.M (Chemstation Integrator)
Title        : TPH by SW846 8015C
Last Update  : Fri Nov 19 13:31:31 2010
Response via : Multiple Level Calibration

Min. RRF     :   0.000  Min. Rel. Area :  50%  Max. R.T. Dev  0.50min
Max. RRF Dev :  20%     Max. Rel. Area : 150%
```

	Compound	Amount	Calc.	%Drift	Area%	Dev(min)	RT Window
1 S	O-TERPHENYL	50.000	54.754	-9.5	112	0.01	5.88- 6.05
2 H	TPH (C10-C28)	2000.000	2165.252	-8.3	111	0.00	2.95- 8.36

(#) = Out of Range SPCC's out = 0 CCC's out = 0
YY17279.D F_DRO.M Mon Nov 22 11:00:20 2010

7.6.8

7

Continuing Calibration Summary

Job Number: F77899
Account: TETTNOAK Tetra Tech, Inc
Project: Holloman AFB; Alamogordo, NM

Sample: GYY678-CC628
Lab FileID: YY18821.D

Evaluate Continuing Calibration Report

```
Data File : C:\MSDCHEM\2\DATA\1123DRO\YY18821.D          Vial: 2
Acq On    : 11-23-10 08:40:03 AM                     Operator: enoca
Sample    : cc628-1000                               Inst    : FID 5
Misc      : op35064,gyy678,30.0,,,1,1,soil           Multiplr: 1.00
IntFile   : events.e

Method       : C:\MSDCHEM\2\METHODS\F_DRO.M (Chemstation Integrator)
Title        : TPH by SW846 8015C
Last Update  : Fri Nov 19 13:31:31 2010
Response via : Multiple Level Calibration

Min. RRF     :   0.000  Min. Rel. Area :  50%  Max. R.T. Dev  0.50min
Max. RRF Dev :  20%     Max. Rel. Area : 150%
```

	Compound	Amount	Calc.	%Drift	Area%	Dev(min)	RT Window
1 S	O-TERPHENYL	25.000	29.143	-16.6	116	0.00	5.88- 6.05
2 H	TPH (C10-C28)	1000.000	1109.556	-11.0	107	0.00	2.95- 8.36

(#) = Out of Range SPCC's out = 0 CCC's out = 0
YY17278.D F_DRO.M Tue Nov 23 14:26:59 2010

7.6.9

7

Continuing Calibration Summary

Job Number: F77899
Account: TETTNOAK Tetra Tech, Inc
Project: Holloman AFB; Alamogordo, NM

Sample: GYY678-ECC628
Lab FileID: YY18831.D

Evaluate Continuing Calibration Report

```
Data File : C:\MSDCHEM\2\DATA\1123DRO\YY18831.D          Vial: 2
Acq On    : 11-23-10 01:09:24 PM                     Operator: enoca
Sample    : ecc628-1000                              Inst    : FID 5
Misc      : op35064,gyy678,30.1,,,1,1,soil           Multiplr: 1.00
IntFile   : events.e

Method       : C:\MSDCHEM\2\METHODS\F_DRO.M (Chemstation Integrator)
Title        : TPH by SW846 8015C
Last Update  : Fri Nov 19 13:31:31 2010
Response via : Multiple Level Calibration

Min. RRF     :   0.000  Min. Rel. Area :  50%  Max. R.T. Dev  0.50min
Max. RRF Dev :  20%     Max. Rel. Area : 150%
```

	Compound	Amount	Calc.	%Drift	Area%	Dev(min)	RT Window
1 S	O-TERPHENYL	25.000	29.523	-18.1	117	0.00	5.88- 6.05
2 H	TPH (C10-C28)	1000.000	1115.983	-11.6	108	0.00	2.95- 8.36

(#) = Out of Range SPCC's out = 0 CCC's out = 0
YY17278.D F_DRO.M Tue Nov 23 14:27:02 2010

7.6.10

7

Southeast ACCUTEST LABORATORIES

Metals Analysis

QC Data Summaries

Includes the following where applicable:

- Instrument Runlogs
- Initial and Continuing Calibration Blanks
- Initial and Continuing Calibration Checks
- High and Low Check Standards
- Interfering Element Check Standards
- Method Blank Summaries
- Matrix Spike and Duplicate Summaries
- Blank Spike and Lab Control Sample Summaries
- Serial Dilution Summaries

Accutest Laboratories Instrument Runlog
Inorganics Analyses

Login Number: F77899
Account: TETTNOAK - Tetra Tech, Inc
Project: Holloman AFB; Alamogordo, NM

File ID: SA111010M1.ICP Date Analyzed: 11/10/10 Methods: SW846 6010C
Analyst: RS Run ID: MA8502
Parameters: As,Ba,Cd,Cr,Pb,Se,Ag

Time	Sample Description	Dilution Factor	PS Recov	Comments
07:48	MA8502-STD1	1		STDA
07:51	MA8502-STD2	1		STDB
07:55	MA8502-STD3	1		STDC
07:59	MA8502-HSTD1	1		
08:03	MA8502-ICV1	1		
08:11	MA8502-ICB1	1		
08:15	MA8502-ICB2	1		
08:19	MA8502-CRIA1	1		
08:19	MA8502-CRIA2	1		
08:28	MA8502-ICSA1	1		
08:33	MA8502-ICSAB1	1		
08:38	MA8502-CCV1	1		
08:45	MA8502-CCB1	1		
10:00	MA8502-CCV2	1		
10:06	MA8502-CCB2	1		
10:12	ZZZZZZ	50		
10:16	F77683-1	20		(sample used for QC only; not part of login F77899)
10:20	MP19433-D1	20		
10:24	MP19433-S1	20		
10:28	MP19433-S2	20		
10:32	MP19433-PS1	20		
10:36	MP19433-SD1	100		
10:40	ZZZZZZ	20		
10:44	F77753-6	2		(sample used for QC only; not part of login F77899)
10:49	MP19437-D1	2		
10:53	MA8502-CCV3	1		
10:57	MA8502-CCB3	1		
11:01	MP19437-S1	2		
11:05	MP19437-S2	2		
11:09	MP19437-PS1	2		
11:13	MP19437-SD1	10		
11:18	ZZZZZZ	20		
11:22	ZZZZZZ	20		

Accutest Laboratories Instrument Runlog
Inorganics Analyses

Login Number: F77899
Account: TETTNOAK - Tetra Tech, Inc
Project: Holloman AFB; Alamogordo, NM

File ID: SA111010M1.ICP Date Analyzed: 11/10/10 Methods: SW846 6010C
Analyst: RS Run ID: MA8502
Parameters: As,Ba,Cd,Cr,Pb,Se,Ag

Time	Sample Description	Dilution Factor	PS Recov	Comments
11:26	ZZZZZZ	5		
11:30	ZZZZZZ	5		
11:34	ZZZZZZ	5		
11:39	ZZZZZZ	5		
11:43	MA8502-CCV4	1		
11:47	MA8502-CCB4	1		
11:51	ZZZZZZ	5		
11:55	F77740-4	2		(sample used for QC only; not part of login F77899)
11:59	MP19440-D1	2		
12:03	MP19440-S1	2		
12:07	MP19440-S2	2		
12:11	MP19440-PS1	2		
12:15	MP19440-SD1	10		
12:19	ZZZZZZ	4		
12:23	ZZZZZZ	4		
12:27	ZZZZZZ	4		
12:31	MA8502-CCV5	1		
12:35	MA8502-CCB5	1		
12:39	ZZZZZZ	5		
12:43	ZZZZZZ	2		
12:47	ZZZZZZ	5		
12:51	ZZZZZZ	50		
12:55	F77814-11	10		(sample used for QC only; not part of login F77899)
13:00	MP19441-D1	10		
13:04	MP19441-S1	10		
13:08	MP19441-S2	10		
13:13	MP19441-PS1	10		
13:17	MP19441-SD1	50		
13:21	MA8502-CCV6	1		
13:25	MA8502-CCB6	1		
13:45	MA8502-CCV7	1		
13:53	MA8502-CCB7	1		
13:57	ZZZZZZ	10		

Accutest Laboratories Instrument Runlog
Inorganics Analyses

Login Number: F77899
Account: TETTNOAK - Tetra Tech, Inc
Project: Holloman AFB; Alamogordo, NM

File ID: SA111010M1.ICP Date Analyzed: 11/10/10 Methods: SW846 6010C
Analyst: RS Run ID: MA8502
Parameters: As,Ba,Cd,Cr,Pb,Se,Ag

Time	Sample Description	Dilution Factor	PS Recov	Comments
14:01	ZZZZZZ	10		
14:05	ZZZZZZ	10		
14:10	ZZZZZZ	10		
14:14	ZZZZZZ	10		
14:18	ZZZZZZ	10		
14:23	ZZZZZZ	10		
14:27	ZZZZZZ	10		
14:32	ZZZZZZ	10		
14:36	ZZZZZZ	10		
14:40	MA8502-CCV8	1		
14:44	MA8502-CCB8	1		
14:49	ZZZZZZ	10		
14:53	ZZZZZZ	10		
14:57	ZZZZZZ	10		
15:02	ZZZZZZ	10		
15:06	ZZZZZZ	4		
15:10	ZZZZZZ	4		
15:14	ZZZZZZ	10		
15:18	ZZZZZZ	2		
15:23	ZZZZZZ	5		
15:27	ZZZZZZ	2		
15:31	MA8502-CCV9	1		
15:35	MA8502-CCB9	1		
15:39	MP19452-MB1	1		
15:43	MP19452-B1	1		
15:47	F77889-10	1		(sample used for QC only; not part of login F77899)
15:51	MP19452-D1	1		
15:56	MP19452-SD1	5		
16:00	MP19452-PS1	1		
16:04	MP19452-S1	1		
16:08	MP19452-S2	1		
16:12	ZZZZZZ	1		
16:17	ZZZZZZ	1		

Accutest Laboratories Instrument Runlog
Inorganics Analyses

Login Number: F77899
Account: TETTNOAK - Tetra Tech, Inc
Project: Holloman AFB; Alamogordo, NM

File ID: SA111010M1.ICP Date Analyzed: 11/10/10 Methods: SW846 6010C
Analyst: RS Run ID: MA8502
Parameters: As,Ba,Cd,Cr,Pb,Se,Ag

Time	Sample Description	Dilution Factor	PS Recov	Comments
16:21	MA8502-CCV10	1		
16:25	MA8502-CCB10	1		
16:46	MA8502-CCV11	1		
16:51	MA8502-CCB11	1		
16:55	ZZZZZZ	1		
16:59	ZZZZZZ	1		
17:03	ZZZZZZ	1		
17:07	ZZZZZZ	1		
17:12	ZZZZZZ	1		
17:16	ZZZZZZ	1		
17:20	ZZZZZZ	1		
17:25	ZZZZZZ	1		
17:29	ZZZZZZ	1		
17:33	ZZZZZZ	1		
17:38	MA8502-CCV12	1		
17:41	MA8502-CCB12	1		
17:46	ZZZZZZ	1		
17:50	ZZZZZZ	1		
17:54	ZZZZZZ	1		
17:58	ZZZZZZ	1		
18:16	MP19453-MB1	1		
18:20	MP19453-B1	1		
18:24	F77889-18	1		(sample used for QC only; not part of login F77899)
18:28	MA8502-CCV13	1		
18:32	MA8502-CCB13	1		
18:36	MP19453-D1	1		
18:41	MP19453-SD1	5		
18:45	MP19453-PS1	1		
18:49	MP19453-S1	1		
18:53	MP19453-S2	1		
18:57	ZZZZZZ	1		
19:02	ZZZZZZ	1		
19:06	ZZZZZZ	1		

Accutest Laboratories Instrument Runlog
Inorganics Analyses

Login Number: F77899
Account: TETTNOAK - Tetra Tech, Inc
Project: Holloman AFB; Alamogordo, NM

File ID: SA111010M1.ICP Date Analyzed: 11/10/10 Methods: SW846 6010C
Analyst: RS Run ID: MA8502
Parameters: As,Ba,Cd,Cr,Pb,Se,Ag

Time	Sample Description	Dilution Factor	PS Recov	Comments
19:10	ZZZZZZ	1		
19:14	ZZZZZZ	1		
19:19	MA8502-CCV14	1		
19:23	MA8502-CCB14	1		
19:27	ZZZZZZ	1		
19:31	ZZZZZZ	1		
19:35	ZZZZZZ	1		
19:40	ZZZZZZ	1		
19:44	ZZZZZZ	1		
19:48	ZZZZZZ	1		
19:52	ZZZZZZ	1		
19:57	ZZZZZZ	1		
20:01	ZZZZZZ	1		
20:05	ZZZZZZ	1		
20:09	MA8502-CCV15	1		
20:13	MA8502-CCB15	1		
20:18	ZZZZZZ	1		
20:22	ZZZZZZ	1		
20:26	ZZZZZZ	1		
20:30	ZZZZZZ	1		
20:35	MP19455-MB1	1		
20:39	MP19455-B1	1		
20:43	F77900-1	1		(sample used for QC only; not part of login F77899)
20:47	MP19455-D1	1		
20:51	MP19455-SD1	5		
20:55	MP19455-PS1	1		
20:59	MA8502-CCV16	1		
21:03	MA8502-CCB16	1		
21:07	MP19455-S1	1		
21:11	MP19455-S2	1		
21:15	ZZZZZZ	1		
21:19	ZZZZZZ	1		
21:23	ZZZZZZ	1		

Accutest Laboratories Instrument Runlog
Inorganics Analyses

Login Number: F77899
Account: TETTNOAK - Tetra Tech, Inc
Project: Holloman AFB; Alamogordo, NM

File ID: SA111010M1.ICP Date Analyzed: 11/10/10 Methods: SW846 6010C
Analyst: RS Run ID: MA8502
Parameters: As,Ba,Cd,Cr,Pb,Se,Ag

	Time	Sample Description	Dilution Factor	PS Recov	Comments
	21:27	MP19447-MB1	1		
	21:32	MP19447-B1	1		
	21:36	F77899-13	1		
	21:40	MP19447-D1	1		
	21:44	MP19447-SD1	5		
	21:48	MA8502-CCV17	1		
	21:52	MA8502-CCB17	1		
	21:56	MP19447-PS1	1		
	22:00	MP19447-S1	1		
	22:05	MP19447-S2	1		
	22:09	F77899-14	1		
	22:13	F77899-15	1		
	22:17	F77899-16	1		
---------->	Last reportable sample/prep for job F77899				
	22:21	ZZZZZZ	1		
	22:25	ZZZZZZ	1		
	22:29	ZZZZZZ	1		
	22:33	ZZZZZZ	1		
	22:37	MA8502-CCV18	1		
	22:41	MA8502-CCB18	1		
	22:46	MP19448-MB1	1		
	22:50	MP19448-B1	1		
	22:54	F77881-1	1		(sample used for QC only; not part of login F77899)
	22:58	MP19448-D1	1		
	23:02	MP19448-SD1	5		
	23:06	MP19448-PS1	1		
	23:10	MP19448-S1	1		
	23:14	MP19448-S2	1		
	23:22	ZZZZZZ	1		
	23:26	MA8502-CCV19	1		
	23:30	MA8502-CCB19	1		
	23:38	ZZZZZZ	1		
	23:42	ZZZZZZ	1		
	23:46	ZZZZZZ	1		

Accutest Laboratories Instrument Runlog
Inorganics Analyses

Login Number: F77899
Account: TETTNOAK - Tetra Tech, Inc
Project: Holloman AFB; Alamogordo, NM

File ID: SA111010M1.ICP Date Analyzed: 11/10/10 Methods: SW846 6010C
Analyst: RS Run ID: MA8502
Parameters: As,Ba,Cd,Cr,Pb,Se,Ag

Time	Sample Description	Dilution Factor	PS Recov	Comments
23:50	ZZZZZZ	1		
23:54	ZZZZZZ	1		
23:58	ZZZZZZ	1		
00:10	ZZZZZZ	1		
00:14	MA8502-CCV20	1		
00:18	MA8502-CCB20	1		
00:31	ZZZZZZ	1		
00:47	ZZZZZZ	1		
00:51	ZZZZZZ	1		
00:55	ZZZZZZ	1		
01:00	ZZZZZZ	1		
01:04	MA8502-CCV21	1		
01:08	MA8502-CCB21	1		
01:12	ZZZZZZ	1		
01:16	ZZZZZZ	1		
01:21	ZZZZZZ	1		
01:25	ZZZZZZ	1		
01:29	ZZZZZZ	1		
01:33	ZZZZZZ	1		
01:38	ZZZZZZ	1		
01:42	ZZZZZZ	1		
01:46	ZZZZZZ	1		
01:50	MP19454-MB1	1		
01:54	MA8502-CCV22	1		
01:58	MA8502-CCB22	1		
02:03	MP19454-B1	1		
02:06	ZZZZZZ	1		
02:11	ZZZZZZ	1		
02:15	ZZZZZZ	1		
02:19	MP19454-B2	1		
02:23	MA8502-CRIA3	1		
02:27	MA8502-ICSA2	1		
02:31	MA8502-ICSAB2	1		

Accutest Laboratories Instrument Runlog
Inorganics Analyses

Login Number: F77899
Account: TETTNOAK - Tetra Tech, Inc
Project: Holloman AFB; Alamogordo, NM

File ID: SA111010M1.ICP Date Analyzed: 11/10/10 Methods: SW846 6010C
Analyst: RS Run ID: MA8502
Parameters: As,Ba,Cd,Cr,Pb,Se,Ag

	Time	Sample Description	Dilution Factor	PS Recov	Comments
	02:44	MA8502-CCV23	1		
	02:47	MA8502-CCB23	1		
---------->	Last reportable CCB for job F77899				
	02:56	MA8502-CCV24	1		
	03:00	MA8502-CCB24	1		

Refer to raw data for calibration curve and standards.

INTERNAL STANDARD SUMMARY

Login Number: F77899
Account: TETTNOAK - Tetra Tech, Inc
Project: Holloman AFB; Alamogordo, NM

File ID: SA111010M1.ICP Date Analyzed: 11/10/10 Methods: SW846 6010C
Analyst: RS Run ID: MA8502
Parameters: As,Ba,Cd,Cr,Pb,Se,Ag

Time	Sample Description	Istd#1	Istd#2	Istd#3	Istd#4	Istd#5
07:48	MA8502-STD1	2197	1634	28092	12509	1237
07:51	MA8502-STD2	2071	1633	26495	12636	1094
07:55	MA8502-STD3	1959	1598	25543	12324	1010
07:59	MA8502-HSTD1	1963	1607	25712	12348	1016
08:03	MA8502-ICV1	2025	1599	26432	12504	1078
08:11	MA8502-ICB1	2143 R	1630 R	28031 R	12618 R	1235 R
08:15	MA8502-ICB2	2156	1654	28547	12735	1241
08:19	MA8502-CRIA1	2135	1633	28227	12781	1212
08:19	MA8502-CRIA2	2134	1647	28245	12738	1212
08:28	MA8502-ICSA1	1788	1635	23994	12168	920
08:33	MA8502-ICSAB1	1772	1612	23939	12094	911
08:38	MA8502-CCV1	1963	1608	26622	12340	1068
08:45	MA8502-CCB1	2126	1649	28499	12671	1246
10:00	MA8502-CCV2	1951	1651	27164	12640	1079
10:06	MA8502-CCB2	2073	1650	28312	13045	1244
10:12	ZZZZZZ	2044	1620	27944	12890	1204
10:16	F77683-1	2222	1820	30511	13565	1202
10:20	MP19433-D1	2243	1821	30984	13802	1232
10:24	MP19433-S1	2233	1830	30842	13884	1198
10:28	MP19433-S2	2246	1850	30666	14026	1184
10:32	MP19433-PS1	2193	1839	30728	13974	1181
10:36	MP19433-SD1	2113	1702	28973	13201	1235
10:40	ZZZZZZ	2320	1895	31290	14157	1237
10:44	F77753-6	1589	1252	21332	11071	779
10:49	MP19437-D1	1581	1253	21173	11134	775
10:53	MA8502-CCV3	1959	1624	27183	12787	1084
10:57	MA8502-CCB3	2104	1685	28881	12991	1255
11:01	MP19437-S1	1625	1308	21831	11229	786
11:05	MP19437-S2	1622	1288	21880	11159	785
11:09	MP19437-PS1	1578	1254	21228	11077	769
11:13	MP19437-SD1	1832	1429	24486	12244	963
11:18	ZZZZZZ	1747	1365	23125	11864	894
11:22	ZZZZZZ	1774	1386	23722	11657	902

INTERNAL STANDARD SUMMARY

Login Number: F77899
Account: TETTNOAK - Tetra Tech, Inc
Project: Holloman AFB; Alamogordo, NM

File ID: SA111010M1.ICP Date Analyzed: 11/10/10 Methods: SW846 6010C
Analyst: RS Run ID: MA8502
Parameters: As,Ba,Cd,Cr,Pb,Se,Ag

Time	Sample Description	Istd#1	Istd#2	Istd#3	Istd#4	Istd#5
11:26	ZZZZZZ	1980	1543	27359	12509	1127
11:30	ZZZZZZ	2000	1561	27190	12771	1138
11:34	ZZZZZZ	1954	1486	25888	12899	1111
11:39	ZZZZZZ	1959	1539	26283	12744	1104
11:43	MA8502-CCV4	2014	1671	27586	12720	1102
11:47	MA8502-CCB4	2154	1685	29636	12937	1274
11:51	ZZZZZZ	1989	1539	26904	12684	1129
11:55	F77740-4	2265	1836	30718	14155	1238
11:59	MP19440-D1	2174	1898	29234	13574	1216
12:03	MP19440-S1	2163	1790	29293	13328	1188
12:07	MP19440-S2	2276	1949	32089	13949	1183
12:11	MP19440-PS1	2269	1809	30787	14008	1220
12:15	MP19440-SD1	2209	1749	30012	13468	1277
12:19	ZZZZZZ	2256	1889	30417	13712	1245
12:23	ZZZZZZ	2145	2020	29265	13195	1207
12:27	ZZZZZZ	2095	1642	28463	13447	1085
12:31	MA8502-CCV5	2023	1650	27483	12929	1106
12:35	MA8502-CCB5	2195	1735	29573	13303	1293
12:39	ZZZZZZ	2257	1783	30555	13588	1242
12:43	ZZZZZZ	2291	1792	31025	14592	1154
12:47	ZZZZZZ	2331	1846	31191	14590	1240
12:51	ZZZZZZ	2173	1711	29606	13391	1290
12:55	F77814-11	1943	1531	26889	12668	1058
13:00	MP19441-D1	1947	1552	26881	12951	1061
13:04	MP19441-S1	1932	1545	26369	13068	1052
13:08	MP19441-S2	1937	1532	26481	12863	1050
13:13	MP19441-PS1	1922	1494	26465	12775	1045
13:17	MP19441-SD1	2002	1560	27602	13112	1162
13:21	MA8502-CCV6	1982	1621	26862	13089	1090
13:25	MA8502-CCB6	2148	1651	29215	13090	1274
13:45	MA8502-CCV7	2033	1637	27737	12964	1111
13:53	MA8502-CCB7	2143	1674	29257	13214	1270
13:57	ZZZZZZ	1943	1514	26350	12929	1072

INTERNAL STANDARD SUMMARY

Login Number: F77899
Account: TETTNOAK - Tetra Tech, Inc
Project: Holloman AFB; Alamogordo, NM

File ID: SA111010M1.ICP Date Analyzed: 11/10/10 Methods: SW846 6010C
Analyst: RS Run ID: MA8502
Parameters: As,Ba,Cd,Cr,Pb,Se,Ag

Time	Sample Description	Istd#1	Istd#2	Istd#3	Istd#4	Istd#5
14:01	ZZZZZZ	1923	1500	26652	12706	1055
14:05	ZZZZZZ	1891	1451	26286	12860	1046
14:10	ZZZZZZ	1898	1459	25908	13086	1055
14:14	ZZZZZZ	1905	1461	26116	12990	1060
14:18	ZZZZZZ	1894	1447	26293	12825	1048
14:23	ZZZZZZ	1854	1442	25944	12970	1031
14:27	ZZZZZZ	1866	1428	25750	12844	1035
14:32	ZZZZZZ	1912	1466	26453	13041	1069
14:36	ZZZZZZ	1866	1434	26349	12877	1045
14:40	MA8502-CCV8	1904	1515	26945	13363	1070
14:44	MA8502-CCB8	2018	1558	28336	13731	1234
14:49	ZZZZZZ	1868	1415	25387	13182	1050
14:53	ZZZZZZ	1885	1470	26374	13089	1038
14:57	ZZZZZZ	1832	1410	26020	13003	1030
15:02	ZZZZZZ	1826	1420	25676	13480	1027
15:06	ZZZZZZ	2142	1673	29591	14639	1221
15:10	ZZZZZZ	2175	1687	30337	14605	1205
15:14	ZZZZZZ	1955	1529	27677	13833	1098
15:18	ZZZZZZ	1996	1595	28164	15075	934
15:23	ZZZZZZ	2294	1820	31169	15713	1189
15:27	ZZZZZZ	2472	2188 !	34552	17305 !	1033
15:31	MA8502-CCV9	1916	1564	27054	13380	1076
15:35	MA8502-CCB9	2082	1620	28549	13911	1259
15:39	MP19452-MB1	2101	1629	29074	13781	1265
15:43	MP19452-B1	1975	1562	27713	13372	1129
15:47	F77889-10	1786	1396	25279	13158	1008
15:51	MP19452-D1	1674	1295	23184	13525	917
15:56	MP19452-SD1	1991	1527	27381	13486	1168
16:00	MP19452-PS1	1810	1418	25655	13056	1010
16:04	MP19452-S1	1762	1413	25021	13169	978
16:08	MP19452-S2	1793	1436	25039	13225	992
16:12	ZZZZZZ	1919	1493	26444	13376	1037
16:17	ZZZZZZ	1881	1457	26101	13297	1022

INTERNAL STANDARD SUMMARY

Login Number: F77899
Account: TETTNOAK - Tetra Tech, Inc
Project: Holloman AFB; Alamogordo, NM

File ID: SA111010M1.ICP Date Analyzed: 11/10/10 Methods: SW846 6010C
Analyst: RS Run ID: MA8502
Parameters: As,Ba,Cd,Cr,Pb,Se,Ag

Time	Sample Description	Istd#1	Istd#2	Istd#3	Istd#4	Istd#5
16:21	MA8502-CCV10	1923	1539	26871	13403	1075
16:25	MA8502-CCB10	2101	1620	28822	13755	1263
16:46	MA8502-CCV11	1956	1561	27448	13206	1084
16:51	MA8502-CCB11	2116	1626	29007	13840	1270
16:55	ZZZZZZ	1885	1462	25898	13388	1021
16:59	ZZZZZZ	1879	1437	25911	12972	1040
17:03	ZZZZZZ	1881	1440	26033	13174	1022
17:07	ZZZZZZ	1823	1400	25098	13323	964
17:12	ZZZZZZ	1896	1482	26248	13149	1056
17:16	ZZZZZZ	1737	1413	24510	12966	804
17:20	ZZZZZZ	1860	1430	25725	13158	1037
17:25	ZZZZZZ	1859	1448	25817	13570	1016
17:29	ZZZZZZ	1799	1357	24590	13061	990
17:33	ZZZZZZ	1928	1485	26571	13213	1076
17:38	MA8502-CCV12	1954	1572	27462	13198	1086
17:41	MA8502-CCB12	2079	1596	28803	13646	1252
17:46	ZZZZZZ	2769 !	2515 !	39148 !	20768 !	919
17:50	ZZZZZZ	1847	1427	25673	13296	1061
17:54	ZZZZZZ	1808	1431	25087	13362	900
17:58	ZZZZZZ	1824	1426	25703	12924	990
18:16	MP19453-MB1	2030	1577	28349	13618	1237
18:20	MP19453-B1	1915	1537	26732	13451	1110
18:24	F77889-18	1888	1477	26008	13160	1061
18:28	MA8502-CCV13	1944	1599	27737	13212	1083
18:32	MA8502-CCB13	2106	1632	29432	13488	1269
18:36	MP19453-D1	1875	1459	25890	13147	1054
18:41	MP19453-SD1	2004	1536	27662	13527	1172
18:45	MP19453-PS1	1847	1453	25575	13225	1038
18:49	MP19453-S1	1819	1475	25466	13246	1009
18:53	MP19453-S2	1820	1483	25612	13365	1014
18:57	ZZZZZZ	1809	1436	25455	13119	1027
19:02	ZZZZZZ	1752	1399	24817	13087	979
19:06	ZZZZZZ	1771	1399	25152	13045	1001

INTERNAL STANDARD SUMMARY

Login Number: F77899
Account: TETTNOAK - Tetra Tech, Inc
Project: Holloman AFB; Alamogordo, NM

File ID: SA111010M1.ICP Date Analyzed: 11/10/10 Methods: SW846 6010C
Analyst: RS Run ID: MA8502
Parameters: As,Ba,Cd,Cr,Pb,Se,Ag

Time	Sample Description	Istd#1	Istd#2	Istd#3	Istd#4	Istd#5
19:10	ZZZZZZ	1736	1341	23732	12856	935
19:14	ZZZZZZ	1537	1214	21690	11691	780
19:19	MA8502-CCV14	1839	1492	26546	13244	1057
19:23	MA8502-CCB14	2012	1580	28606	13717	1246
19:27	ZZZZZZ	1798	1404	25604	13125	1036
19:31	ZZZZZZ	1844	1455	26394	13260	1090
19:35	ZZZZZZ	1742	1377	24589	12945	979
19:40	ZZZZZZ	1767	1417	25279	13111	983
19:44	ZZZZZZ	1828	1449	26054	13263	1085
19:48	ZZZZZZ	1887	1484	26599	13167	1104
19:52	ZZZZZZ	1789	1406	25684	12722	1026
19:57	ZZZZZZ	1832	1444	26038	12946	1056
20:01	ZZZZZZ	1921	1547	27166	13730	1051
20:05	ZZZZZZ	1816	1430	25680	12999	1037
20:09	MA8502-CCV15	1872	1551	26630	13180	1065
20:13	MA8502-CCB15	2028	1607	28615	13588	1244
20:18	ZZZZZZ	1796	1411	25254	13188	1034
20:22	ZZZZZZ	1766	1417	24941	13037	1000
20:26	ZZZZZZ	1827	1450	25856	12972	998
20:30	ZZZZZZ	1810	1418	25763	12719	1018
20:35	MP19455-MB1	2015	1606	28578	13295	1257
20:39	MP19455-B1	1912	1549	26899	13070	1107
20:43	F77900-1	1984	1568	27995	13368	1237
20:47	MP19455-D1	1972	1565	27897	13434	1239
20:51	MP19455-SD1	1987	1582	28136	13448	1230
20:55	MP19455-PS1	1954	1551	27416	12745	1191
20:59	MA8502-CCV16	1856	1563	26363	13237	1062
21:03	MA8502-CCB16	1991	1579	28089	13680	1228
21:07	MP19455-S1	1927	1572	26976	13137	1120
21:11	MP19455-S2	1910	1575	27329	13051	1106
21:15	ZZZZZZ	2011	1581	28257	13295	1240
21:19	ZZZZZZ	1988	1576	27960	13395	1229
21:23	ZZZZZZ	1982	1573	27832	13383	1224

INTERNAL STANDARD SUMMARY

Login Number: F77899
Account: TETTNOAK - Tetra Tech, Inc
Project: Holloman AFB; Alamogordo, NM

File ID: SA111010M1.ICP Date Analyzed: 11/10/10 Methods: SW846 6010C
Analyst: RS Run ID: MA8502
Parameters: As,Ba,Cd,Cr,Pb,Se,Ag

Time	Sample Description	Istd#1	Istd#2	Istd#3	Istd#4	Istd#5
21:27	MP19447-MB1	1994	1535	27847	13621	1217
21:32	MP19447-B1	1893	1529	26619	13306	1102
21:36	F77899-13	1482	1227	21728	11856	686 !
21:40	MP19447-D1	1453	1260	22753	11901	701 !
21:44	MP19447-SD1	1658	1313	23884	12555	908
21:48	MA8502-CCV17	1780	1478	25881	13274	1034
21:52	MA8502-CCB17	1958	1553	27846	13258	1236
21:56	MP19447-PS1	1489	1219	21912	11358	690 !
22:00	MP19447-S1	1545	1217	22273	11549	740 !
22:05	MP19447-S2	1492	1238	21839	11563	698 !
22:09	F77899-14	1504	1266	22385	11736	737 !
22:13	F77899-15	1496	1195	22067	12247	715 !
22:17	F77899-16	1474	1191	21719	11672	708 !
22:21	ZZZZZZ	2091	1947	29650	14884	1077
22:25	ZZZZZZ	2182	1884	30843	15414	1096
22:29	ZZZZZZ	2138	1879	30533	15184	1069
22:33	ZZZZZZ	2250	2032	32211	15785 !	1082
22:37	MA8502-CCV18	1867	1584	27145	13427	1068
22:41	MA8502-CCB18	1976	1575	28307	13545	1234
22:46	MP19448-MB1	1950	1522	27840	13323	1222
22:50	MP19448-B1	1857	1490	26365	13114	1092
22:54	F77881-1	2177	1815	30752	15104	1117
22:58	MP19448-D1	2225	1862	31726	15071	1140
23:02	MP19448-SD1	2057	1654	29445	14008	1210
23:06	MP19448-PS1	2180	1794	30712	14819	1112
23:10	MP19448-S1	2129	1833	30164	15021	1060
23:14	MP19448-S2	2105	1776	29795	14753	1065
23:22	ZZZZZZ	2164	2259 !	30771	15434	1027
23:26	MA8502-CCV19	1830	1532	26299	13104	1042
23:30	MA8502-CCB19	1959	1570	28245	13453	1220
23:38	ZZZZZZ	2991 !	2896 !	42669 !	20923 !	1028
23:42	ZZZZZZ	1992	2033	28351	13938	1018
23:46	ZZZZZZ	2521	2404 !	36032 !	17527 !	1058

INTERNAL STANDARD SUMMARY

Login Number: F77899
Account: TETTNOAK - Tetra Tech, Inc
Project: Holloman AFB; Alamogordo, NM

File ID: SA111010M1.ICP Date Analyzed: 11/10/10 Methods: SW846 6010C
Analyst: RS Run ID: MA8502
Parameters: As,Ba,Cd,Cr,Pb,Se,Ag

Time	Sample Description	Istd#1	Istd#2	Istd#3	Istd#4	Istd#5
23:50	ZZZZZZ	2009	1869	28249	13950	1070
23:54	ZZZZZZ	2092	1931	31906	14529	1080
23:58	ZZZZZZ	2029	1968	29636	14367	1056
00:10	ZZZZZZ	2020	2019	28572	13801	1034
00:14	MA8502-CCV20	1888	1560	27211	12898	1073
00:18	MA8502-CCB20	2008	1588	28616	13152	1239
00:31	ZZZZZZ	3266 !	2837 !	45968 !	22143 !	1055
00:47	ZZZZZZ	2012	1975	28409	13457	1048
00:51	ZZZZZZ	1610	1414	23676	12406	716 !
00:55	ZZZZZZ	1463	1185	21881	11380	733 !
01:00	ZZZZZZ	1457	1260	22267	12343	689 !
01:04	MA8502-CCV21	1802	1521	27143	12935	1055
01:08	MA8502-CCB21	1949	1539	28690	13343	1250
01:12	ZZZZZZ	1669	1394	25132	13058	698 !
01:16	ZZZZZZ	1340	1068	20379	10911	689 !
01:21	ZZZZZZ	1346	1087	20476	11113	666 !
01:25	ZZZZZZ	1453	1196	21198	11267	688 !
01:29	ZZZZZZ	1551	1208	21550	11032	762
01:33	ZZZZZZ	1538	1207	21088	11006	731 !
01:38	ZZZZZZ	1696	1460	23947	12128	740 !
01:42	ZZZZZZ	1689	1364	23603	11988	795
01:46	ZZZZZZ	1581	1306	22203	10818	727 !
01:50	MP19454-MB1	2125	1632	28342	12199	1230
01:54	MA8502-CCV22	2107	1737	27839	12498	1124
01:58	MA8502-CCB22	2244	1693	28722	11866	1291
02:03	MP19454-B1	1999	1595	26572	11734	1102
02:06	ZZZZZZ	1863	2161 !	24978	11686	946
02:11	ZZZZZZ	2072	1637	27519	12104	1140
02:15	ZZZZZZ	1955	1962	26271	12142	1032
02:19	MP19454-B2	2013	1628	27245	11941	1108
02:23	MA8502-CRIA3	2190	1780	29535	12399	1242
02:27	MA8502-ICSA2	1799	1691	24370	11509	915
02:31	MA8502-ICSAB2	1883	1729	25211	11910	952

INTERNAL STANDARD SUMMARY

Login Number: F77899
Account: TETTNOAK - Tetra Tech, Inc
Project: Holloman AFB; Alamogordo, NM

File ID: SA111010M1.ICP Date Analyzed: 11/10/10 Methods: SW846 6010C
Analyst: RS Run ID: MA8502
Parameters: As,Ba,Cd,Cr,Pb,Se,Ag

Time	Sample Description	Istd#1	Istd#2	Istd#3	Istd#4	Istd#5
02:44	MA8502-CCV23	2044	1674	27477	12179	1101
02:47	MA8502-CCB23	2220	1741	29500	12469	1286
02:56	MA8502-CCV24	1986	1623	26411	12149	1074
03:00	MA8502-CCB24	2193	1733	29442	12438	1271

R = Reference for ISTD limits. ! = Outside limits.

LEGEND:

Istd#	Parameter	Limits
Istd#1	Yttrium (2243)	60-125 %
Istd#2	Yttrium (2422)	60-125 %
Istd#3	Yttrium (3242)	60-125 %
Istd#4	Yttrium (3710)	60-125 %
Istd#5	Indium	60-125 %

8.1.1

8

BLANK RESULTS SUMMARY
Part 1 - Initial and Continuing Calibration Blanks

Login Number: F77899
Account: TETTNOAK - Tetra Tech, Inc
Project: Holloman AFB; Alamogordo, NM

File ID: SA111010M1.ICP Date Analyzed: 11/10/10 Methods: SW846 6010C
QC Limits: result < RL Run ID: MA8502 Units: ug/l

Time:			08:11		08:15		08:45		10:06	
Sample ID:			ICB1		ICB2		CCB1		CCB2	
Metal	RL	IDL	raw	final	raw	final	raw	final	raw	final
Aluminum	200	20	anr							
Antimony	5.0	1								
Arsenic	10	1	-0.40	<10			-0.30	<10	-0.60	<10
Barium	200	1	-2.0	<200			-3.5	<200	-3.9	<200
Beryllium	5.0	.1	anr							
Cadmium	5.0	.1	0.0	<5.0			0.0	<5.0	0.10	<5.0
Calcium	1000	50								
Chromium	10	1	-0.10	<10			0.10	<10	0.50	<10
Cobalt	50	1	anr							
Copper	25	1	anr							
Iron	300	34	anr							
Lead	5.0	1	-0.20	<5.0			-0.50	<5.0	-0.30	<5.0
Magnesium	5000	50	anr							
Manganese	15	1	anr							
Molybdenum	50	1								
Nickel	40	1	anr							
Potassium	5000	50	anr							
Selenium	10	2	-0.20	<10			0.20	<10	0.60	<10
Silver	10	1	0.20	<10			0.0	<10	0.40	<10
Sodium	5000	750	anr							
Strontium	10	1								
Thallium	10	1	anr							
Tin	50	1								
Titanium	10	1.1								
Vanadium	50	1	anr							
Zinc	20	1	anr							

(*) Outside of QC limits
(anr) Analyte not requested

BLANK RESULTS SUMMARY
Part 1 - Initial and Continuing Calibration Blanks

Login Number: F77899
Account: TETTNOAK - Tetra Tech, Inc
Project: Holloman AFB; Alamogordo, NM

File ID: SA111010M1.ICP Date Analyzed: 11/10/10 Methods: SW846 6010C
QC Limits: result < RL Run ID: MA8502 Units: ug/l

Time:			10:57		11:47		12:35		13:25	
Sample ID:			CCB3		CCB4		CCB5		CCB6	
Metal	RL	IDL	raw	final	raw	final	raw	final	raw	final
Aluminum	200	20	anr							
Antimony	5.0	1	anr							
Arsenic	10	1	-0.70	<10	0.40	<10	0.10	<10	0.60	<10
Barium	200	1	-3.8	<200	-4.6	<200	-4.2	<200	-4.7	<200
Beryllium	5.0	.1	anr							
Cadmium	5.0	.1	0.10	<5.0	0.10	<5.0	0.20	<5.0	0.20	<5.0
Calcium	1000	50								
Chromium	10	1	0.20	<10	0.10	<10	0.0	<10	0.20	<10
Cobalt	50	1	anr							
Copper	25	1	anr							
Iron	300	34	anr							
Lead	5.0	1	-0.50	<5.0	-0.40	<5.0	-0.30	<5.0	0.0	<5.0
Magnesium	5000	50	anr							
Manganese	15	1	anr							
Molybdenum	50	1								
Nickel	40	1	anr							
Potassium	5000	50	anr							
Selenium	10	2	1.3	<10	0.90	<10	1.9	<10	2.0	<10
Silver	10	1	0.40	<10	0.30	<10	0.10	<10	-0.10	<10
Sodium	5000	750	anr							
Strontium	10	1								
Thallium	10	1	anr							
Tin	50	1								
Titanium	10	1.1								
Vanadium	50	1	anr							
Zinc	20	1	anr							

(*) Outside of QC limits
(anr) Analyte not requested

BLANK RESULTS SUMMARY
Part 1 - Initial and Continuing Calibration Blanks

Login Number: F77899
Account: TETTNOAK - Tetra Tech, Inc
Project: Holloman AFB; Alamogordo, NM

File ID: SA111010M1.ICP Date Analyzed: 11/10/10 Methods: SW846 6010C
QC Limits: result < RL Run ID: MA8502 Units: ug/l

Time:			13:53		14:44		15:35		16:25	
Sample ID:			CCB7		CCB8		CCB9		CCB10	
Metal	RL	IDL	raw	final	raw	final	raw	final	raw	final
Aluminum	200	20	anr							
Antimony	5.0	1	anr							
Arsenic	10	1	-0.10	<10	-2.5	<10	-0.40	<10	-1.1	<10
Barium	200	1	0.50	<200	-1.7	<200	-0.90	<200	-0.90	<200
Beryllium	5.0	.1	anr							
Cadmium	5.0	.1	0.10	<5.0	0.30	<5.0	0.0	<5.0	0.10	<5.0
Calcium	1000	50								
Chromium	10	1	0.40	<10	0.40	<10	-0.10	<10	0.0	<10
Cobalt	50	1	anr							
Copper	25	1	anr							
Iron	300	34	anr							
Lead	5.0	1	0.0	<5.0	0.40	<5.0	0.20	<5.0	0.0	<5.0
Magnesium	5000	50	anr							
Manganese	15	1	anr							
Molybdenum	50	1								
Nickel	40	1	anr							
Potassium	5000	50	anr							
Selenium	10	2	0.40	<10	0.10	<10	-1.1	<10	-0.20	<10
Silver	10	1	0.10	<10	0.0	<10	0.0	<10	0.30	<10
Sodium	5000	750	anr							
Strontium	10	1								
Thallium	10	1	anr							
Tin	50	1								
Titanium	10	1.1								
Vanadium	50	1	anr							
Zinc	20	1	anr							

(*) Outside of QC limits
(anr) Analyte not requested

BLANK RESULTS SUMMARY
Part 1 - Initial and Continuing Calibration Blanks

Login Number: F77899
Account: TETTNOAK - Tetra Tech, Inc
Project: Holloman AFB; Alamogordo, NM

File ID: SA111010M1.ICP Date Analyzed: 11/10/10 Methods: SW846 6010C
QC Limits: result < RL Run ID: MA8502 Units: ug/l

Time:			16:51		17:41		18:32		19:23	
Sample ID:			CCB11		CCB12		CCB13		CCB14	
Metal	RL	IDL	raw	final	raw	final	raw	final	raw	final
Aluminum	200	20	anr							
Antimony	5.0	1	anr							
Arsenic	10	1	-0.80	<10	-0.60	<10	1.0	<10	0.40	<10
Barium	200	1	1.0	<200	1.1	<200	0.70	<200	0.0	<200
Beryllium	5.0	.1	anr							
Cadmium	5.0	.1	0.0	<5.0	0.0	<5.0	0.10	<5.0	0.10	<5.0
Calcium	1000	50								
Chromium	10	1	-0.20	<10	-0.10	<10	0.0	<10	0.0	<10
Cobalt	50	1	anr							
Copper	25	1	anr							
Iron	300	34	anr							
Lead	5.0	1	-0.30	<5.0	0.40	<5.0	1.1	<5.0	0.10	<5.0
Magnesium	5000	50	anr							
Manganese	15	1	anr							
Molybdenum	50	1								
Nickel	40	1	anr							
Potassium	5000	50	anr							
Selenium	10	2	1.2	<10	1.6	<10	0.20	<10	0.70	<10
Silver	10	1	-0.20	<10	-0.20	<10	-0.20	<10	0.10	<10
Sodium	5000	750	anr							
Strontium	10	1								
Thallium	10	1	anr							
Tin	50	1								
Titanium	10	1.1								
Vanadium	50	1	anr							
Zinc	20	1	anr							

(*) Outside of QC limits
(anr) Analyte not requested

BLANK RESULTS SUMMARY
Part 1 - Initial and Continuing Calibration Blanks

Login Number: F77899
Account: TETTNOAK - Tetra Tech, Inc
Project: Holloman AFB; Alamogordo, NM

File ID: SA111010M1.ICP Date Analyzed: 11/10/10 Methods: SW846 6010C
QC Limits: result < RL Run ID: MA8502 Units: ug/l

Time:			20:13		21:03		21:52		22:41	
Sample ID:			CCB15		CCB16		CCB17		CCB18	
Metal	RL	IDL	raw	final	raw	final	raw	final	raw	final
Aluminum	200	20	anr							
Antimony	5.0	1	anr							
Arsenic	10	1	0.10	<10	-0.80	<10	-1.4	<10	-0.20	<10
Barium	200	1	1.1	<200	1.0	<200	0.60	<200	-1.0	<200
Beryllium	5.0	.1	anr							
Cadmium	5.0	.1	-0.10	<5.0	0.0	<5.0	0.10	<5.0	0.0	<5.0
Calcium	1000	50								
Chromium	10	1	-0.20	<10	-0.30	<10	-0.10	<10	-0.10	<10
Cobalt	50	1	anr							
Copper	25	1	anr							
Iron	300	34	anr							
Lead	5.0	1	0.60	<5.0	0.60	<5.0	0.40	<5.0	0.20	<5.0
Magnesium	5000	50	anr							
Manganese	15	1	anr							
Molybdenum	50	1								
Nickel	40	1	anr							
Potassium	5000	50	anr							
Selenium	10	2	-0.10	<10	-0.10	<10	1.1	<10	0.70	<10
Silver	10	1	0.20	<10	0.30	<10	0.20	<10	0.20	<10
Sodium	5000	750	anr							
Strontium	10	1								
Thallium	10	1	anr							
Tin	50	1								
Titanium	10	1.1								
Vanadium	50	1	anr							
Zinc	20	1	anr							

(*) Outside of QC limits
(anr) Analyte not requested

BLANK RESULTS SUMMARY
Part 1 - Initial and Continuing Calibration Blanks

Login Number: F77899
Account: TETTNOAK - Tetra Tech, Inc
Project: Holloman AFB; Alamogordo, NM

File ID: SA111010M1.ICP Date Analyzed: 11/10/10 Methods: SW846 6010C
QC Limits: result < RL Run ID: MA8502 Units: ug/l

Time:			23:30		00:18		01:08		01:58	
Sample ID:			CCB19		CCB20		CCB21		CCB22	
Metal	RL	IDL	raw	final	raw	final	raw	final	raw	final
Aluminum	200	20	anr							
Antimony	5.0	1	anr							
Arsenic	10	1	-0.70	<10	-0.80	<10	-0.20	<10	0.80	<10
Barium	200	1	-1.2	<200	-1.1	<200	-3.7	<200	5.4	<200
Beryllium	5.0	.1	anr							
Cadmium	5.0	.1	0.10	<5.0	0.0	<5.0	0.0	<5.0	0.20	<5.0
Calcium	1000	50								
Chromium	10	1	0.0	<10	-0.10	<10	-0.20	<10	-0.30	<10
Cobalt	50	1	anr							
Copper	25	1	anr							
Iron	300	34	anr							
Lead	5.0	1	0.50	<5.0	0.10	<5.0	0.10	<5.0	1.1	<5.0
Magnesium	5000	50	anr							
Manganese	15	1	anr							
Molybdenum	50	1								
Nickel	40	1	anr							
Potassium	5000	50	anr							
Selenium	10	2	-2.0	<10	0.0	<10	0.20	<10	-0.70	<10
Silver	10	1	0.30	<10	0.30	<10	-0.10	<10	0.50	<10
Sodium	5000	750	anr							
Strontium	10	1								
Thallium	10	1	anr							
Tin	50	1								
Titanium	10	1.1								
Vanadium	50	1	anr							
Zinc	20	1	anr							

(*) Outside of QC limits
(anr) Analyte not requested

BLANK RESULTS SUMMARY
Part 1 - Initial and Continuing Calibration Blanks

Login Number: F77899
Account: TETTNOAK - Tetra Tech, Inc
Project: Holloman AFB; Alamogordo, NM

File ID: SA111010M1.ICP Date Analyzed: 11/10/10 Methods: SW846 6010C
QC Limits: result < RL Run ID: MA8502 Units: ug/l

Time:			02:47	
Sample ID:			CCB23	
Metal	RL	IDL	raw	final
Aluminum	200	20	anr	
Antimony	5.0	1	anr	
Arsenic	10	1	0.30	<10
Barium	200	1	2.8	<200
Beryllium	5.0	.1	anr	
Cadmium	5.0	.1	0.10	<5.0
Calcium	1000	50		
Chromium	10	1	0.10	<10
Cobalt	50	1	anr	
Copper	25	1	anr	
Iron	300	34	anr	
Lead	5.0	1	0.70	<5.0
Magnesium	5000	50	anr	
Manganese	15	1	anr	
Molybdenum	50	1		
Nickel	40	1	anr	
Potassium	5000	50	anr	
Selenium	10	2	-1.4	<10
Silver	10	1	0.40	<10
Sodium	5000	750	anr	
Strontium	10	1		
Thallium	10	1	anr	
Tin	50	1		
Titanium	10	1.1		
Vanadium	50	1	anr	
Zinc	20	1	anr	

(*) Outside of QC limits
(anr) Analyte not requested

CALIBRATION CHECK STANDARDS SUMMARY
Initial and Continuing Calibration Checks

Login Number: F77899
Account: TETTNOAK - Tetra Tech, Inc
Project: Holloman AFB; Alamogordo, NM

File ID: SA111010M1.ICP Date Analyzed: 11/10/10 Methods: SW846 6010C
QC Limits: 90 to 110 % Recovery Run ID: MA8502 Units: ug/l

Time:		08:03			08:38			10:00	
Sample ID:	ICV	ICV1		CCV	CCV1		CCV	CCV2	
Metal	True	Results	% Rec	True	Results	% Rec	True	Results	% Rec
Aluminum	anr								
Antimony	anr								
Arsenic	2000	2010	100.5	2000	2090	104.5	2000	2120	106.0
Barium	2000	2060	103.0	2000	2140	107.0	2000	2130	106.5
Beryllium	anr								
Cadmium	2000	2060	103.0	2000	2100	105.0	2000	2120	106.0
Calcium									
Chromium	2000	2040	102.0	2000	2040	102.0	2000	1980	99.0
Cobalt	anr								
Copper	anr								
Iron	anr								
Lead	2000	2020	101.0	2000	2020	101.0	2000	2020	101.0
Magnesium	anr								
Manganese	anr								
Molybdenum									
Nickel	anr								
Potassium	anr								
Selenium	2000	2040	102.0	2000	2070	103.5	2000	2090	104.5
Silver	250	243	97.2	250	244	97.6	250	237	94.8
Sodium	anr								
Strontium									
Thallium	anr								
Tin									
Titanium									
Vanadium	anr								
Zinc	anr								

(*) Outside of QC limits
(anr) Analyte not requested

CALIBRATION CHECK STANDARDS SUMMARY
Initial and Continuing Calibration Checks

Login Number: F77899
Account: TETTNOAK - Tetra Tech, Inc
Project: Holloman AFB; Alamogordo, NM

File ID: SA111010M1.ICP Date Analyzed: 11/10/10 Methods: SW846 6010C
QC Limits: 90 to 110 % Recovery Run ID: MA8502 Units: ug/l

Time:		10:53			11:43			12:31	
Sample ID:	CCV	CCV3		CCV	CCV4		CCV	CCV5	
Metal	True	Results	% Rec	True	Results	% Rec	True	Results	% Rec
Aluminum	anr								
Antimony	anr								
Arsenic	2000	2090	104.5	2000	2050	102.5	2000	2040	102.0
Barium	2000	2100	105.0	2000	2080	104.0	2000	2060	103.0
Beryllium	anr								
Cadmium	2000	2090	104.5	2000	2070	103.5	2000	2040	102.0
Calcium									
Chromium	2000	1980	99.0	2000	1960	98.0	2000	1970	98.5
Cobalt	anr								
Copper	anr								
Iron	anr								
Lead	2000	1980	99.0	2000	1990	99.5	2000	1960	98.0
Magnesium	anr								
Manganese	anr								
Molybdenum									
Nickel	anr								
Potassium	anr								
Selenium	2000	2070	103.5	2000	2010	100.5	2000	2020	101.0
Silver	250	233	93.2	250	233	93.2	250	233	93.2
Sodium	anr								
Strontium									
Thallium	anr								
Tin									
Titanium									
Vanadium	anr								
Zinc	anr								

(*) Outside of QC limits
(anr) Analyte not requested

CALIBRATION CHECK STANDARDS SUMMARY
Initial and Continuing Calibration Checks

Login Number: F77899
Account: TETTNOAK - Tetra Tech, Inc
Project: Holloman AFB; Alamogordo, NM

File ID: SA111010M1.ICP Date Analyzed: 11/10/10 Methods: SW846 6010C
QC Limits: 90 to 110 % Recovery Run ID: MA8502 Units: ug/l

Time:		13:21			13:45			14:40	
Sample ID:	CCV	CCV6		CCV	CCV7		CCV	CCV8	
Metal	True	Results	% Rec	True	Results	% Rec	True	Results	% Rec
Aluminum	anr								
Antimony	anr								
Arsenic	2000	2060	103.0	2000	1980	99.0	2000	2030	101.5
Barium	2000	2070	103.5	2000	2060	103.0	2000	2130	106.5
Beryllium	anr								
Cadmium	2000	2040	102.0	2000	2020	101.0	2000	2010	100.5
Calcium									
Chromium	2000	1980	99.0	2000	2090	104.5	2000	2120	106.0
Cobalt	anr								
Copper	anr								
Iron	anr								
Lead	2000	1960	98.0	2000	2000	100.0	2000	1940	97.0
Magnesium	anr								
Manganese	anr								
Molybdenum									
Nickel	anr								
Potassium	anr								
Selenium	2000	2050	102.5	2000	1980	99.0	2000	2070	103.5
Silver	250	239	95.6	250	252	100.8	250	254	101.6
Sodium	anr								
Strontium									
Thallium	anr								
Tin									
Titanium									
Vanadium	anr								
Zinc	anr								

(*) Outside of QC limits
(anr) Analyte not requested

CALIBRATION CHECK STANDARDS SUMMARY
Initial and Continuing Calibration Checks

Login Number: F77899
Account: TETTNOAK - Tetra Tech, Inc
Project: Holloman AFB; Alamogordo, NM

File ID: SA111010M1.ICP Date Analyzed: 11/10/10 Methods: SW846 6010C
QC Limits: 90 to 110 % Recovery Run ID: MA8502 Units: ug/l

Time:		15:31			16:21			16:46	
Sample ID:	CCV	CCV9		CCV	CCV10		CCV	CCV11	
Metal	True	Results	% Rec	True	Results	% Rec	True	Results	% Rec
Aluminum	anr								
Antimony	anr								
Arsenic	2000	2060	103.0	2000	2030	101.5	2000	2010	100.5
Barium	2000	2120	106.0	2000	2120	106.0	2000	2090	104.5
Beryllium	anr								
Cadmium	2000	2040	102.0	2000	2010	100.5	2000	2070	103.5
Calcium									
Chromium	2000	2110	105.5	2000	2120	106.0	2000	2120	106.0
Cobalt	anr								
Copper	anr								
Iron	anr								
Lead	2000	1980	99.0	2000	1960	98.0	2000	2040	102.0
Magnesium	anr								
Manganese	anr								
Molybdenum									
Nickel	anr								
Potassium	anr								
Selenium	2000	2070	103.5	2000	2060	103.0	2000	2020	101.0
Silver	250	255	102.0	250	256	102.4	250	257	102.8
Sodium	anr								
Strontium									
Thallium	anr								
Tin									
Titanium									
Vanadium	anr								
Zinc	anr								

(*) Outside of QC limits
(anr) Analyte not requested

CALIBRATION CHECK STANDARDS SUMMARY
Initial and Continuing Calibration Checks

Login Number: F77899
Account: TETTNOAK - Tetra Tech, Inc
Project: Holloman AFB; Alamogordo, NM

File ID: SA111010M1.ICP Date Analyzed: 11/10/10 Methods: SW846 6010C
QC Limits: 90 to 110 % Recovery Run ID: MA8502 Units: ug/l

Time:		17:38			18:28			19:19	
Sample ID:	CCV	CCV12		CCV	CCV13		CCV	CCV14	
Metal	True	Results	% Rec	True	Results	% Rec	True	Results	% Rec
Aluminum	anr								
Antimony	anr								
Arsenic	2000	2020	101.0	2000	2050	102.5	2000	2110	105.5
Barium	2000	2090	104.5	2000	2080	104.0	2000	2170	108.5
Beryllium	anr								
Cadmium	2000	2070	103.5	2000	2120	106.0	2000	2110	105.5
Calcium									
Chromium	2000	2110	105.5	2000	2090	104.5	2000	2090	104.5
Cobalt	anr								
Copper	anr								
Iron	anr								
Lead	2000	2050	102.5	2000	2080	104.0	2000	2040	102.0
Magnesium	anr								
Manganese	anr								
Molybdenum									
Nickel	anr								
Potassium	anr								
Selenium	2000	2010	100.5	2000	2030	101.5	2000	2110	105.5
Silver	250	255	102.0	250	254	101.6	250	254	101.6
Sodium	anr								
Strontium									
Thallium	anr								
Tin									
Titanium									
Vanadium	anr								
Zinc	anr								

(*) Outside of QC limits
(anr) Analyte not requested

CALIBRATION CHECK STANDARDS SUMMARY
Initial and Continuing Calibration Checks

Login Number: F77899
Account: TETTNOAK - Tetra Tech, Inc
Project: Holloman AFB; Alamogordo, NM

File ID: SA111010M1.ICP Date Analyzed: 11/10/10 Methods: SW846 6010C
QC Limits: 90 to 110 % Recovery Run ID: MA8502 Units: ug/l

Time:		20:09			20:59			21:48	
Sample ID:	CCV	CCV15		CCV	CCV16		CCV	CCV17	
Metal	True	Results	% Rec	True	Results	% Rec	True	Results	% Rec
Aluminum	anr								
Antimony	anr								
Arsenic	2000	2110	105.5	2000	2120	106.0	2000	2170	108.5
Barium	2000	2130	106.5	2000	2110	105.5	2000	2130	106.5
Beryllium	anr								
Cadmium	2000	2130	106.5	2000	2140	107.0	2000	2160	108.0
Calcium									
Chromium	2000	2100	105.0	2000	2070	103.5	2000	2150	107.5
Cobalt	anr								
Copper	anr								
Iron	anr								
Lead	2000	2080	104.0	2000	2070	103.5	2000	2080	104.0
Magnesium	anr								
Manganese	anr								
Molybdenum									
Nickel	anr								
Potassium	anr								
Selenium	2000	2100	105.0	2000	2100	105.0	2000	2170	108.5
Silver	250	255	102.0	250	251	100.4	250	257	102.8
Sodium	anr								
Strontium									
Thallium	anr								
Tin									
Titanium									
Vanadium	anr								
Zinc	anr								

(*) Outside of QC limits
(anr) Analyte not requested

CALIBRATION CHECK STANDARDS SUMMARY
Initial and Continuing Calibration Checks

Login Number: F77899
Account: TETTNOAK - Tetra Tech, Inc
Project: Holloman AFB; Alamogordo, NM

File ID: SA111010M1.ICP Date Analyzed: 11/10/10 Methods: SW846 6010C
QC Limits: 90 to 110 % Recovery Run ID: MA8502 Units: ug/l

Time:		22:37			23:26			00:14	
Sample ID:	CCV	CCV18		CCV	CCV19		CCV	CCV20	
Metal	True	Results	% Rec	True	Results	% Rec	True	Results	% Rec
Aluminum	anr								
Antimony	anr								
Arsenic	2000	2120	106.0	2000	2170	108.5	2000	2100	105.0
Barium	2000	2090	104.5	2000	2130	106.5	2000	2160	108.0
Beryllium	anr								
Cadmium	2000	2140	107.0	2000	2190	109.5	2000	2130	106.5
Calcium									
Chromium	2000	2080	104.0	2000	2160	108.0	2000	2140	107.0
Cobalt	anr								
Copper	anr								
Iron	anr								
Lead	2000	2070	103.5	2000	2120	106.0	2000	2070	103.5
Magnesium	anr								
Manganese	anr								
Molybdenum									
Nickel	anr								
Potassium	anr								
Selenium	2000	2090	104.5	2000	2150	107.5	2000	2080	104.0
Silver	250	250	100.0	250	259	103.6	250	255	102.0
Sodium	anr								
Strontium									
Thallium	anr								
Tin									
Titanium									
Vanadium	anr								
Zinc	anr								

(*) Outside of QC limits
(anr) Analyte not requested

CALIBRATION CHECK STANDARDS SUMMARY
Initial and Continuing Calibration Checks

Login Number: F77899
Account: TETTNOAK - Tetra Tech, Inc
Project: Holloman AFB; Alamogordo, NM

File ID: SA111010M1.ICP Date Analyzed: 11/10/10 Methods: SW846 6010C
QC Limits: 90 to 110 % Recovery Run ID: MA8502 Units: ug/l

Time:		01:04			01:54			02:44	
Sample ID:	CCV	CCV21		CCV	CCV22		CCV	CCV23	
Metal	True	Results	% Rec	True	Results	% Rec	True	Results	% Rec
Aluminum	anr								
Antimony	anr								
Arsenic	2000	2130	106.5	2000	2010	100.5	2000	2020	101.0
Barium	2000	2180	109.0	2000	2010	100.5	2000	2060	103.0
Beryllium	anr								
Cadmium	2000	2090	104.5	2000	2150	107.5	2000	2140	107.0
Calcium									
Chromium	2000	2080	104.0	2000	2120	106.0	2000	2100	105.0
Cobalt	anr								
Copper	anr								
Iron	anr								
Lead	2000	2000	100.0	2000	2170	108.5	2000	2140	107.0
Magnesium	anr								
Manganese	anr								
Molybdenum									
Nickel	anr								
Potassium	anr								
Selenium	2000	2100	105.0	2000	1970	98.5	2000	1970	98.5
Silver	250	248	99.2	250	255	102.0	250	253	101.2
Sodium	anr								
Strontium									
Thallium	anr								
Tin									
Titanium									
Vanadium	anr								
Zinc	anr								

(*) Outside of QC limits
(anr) Analyte not requested

HIGH STANDARD CHECK SUMMARY

Login Number: F77899
Account: TETTNOAK - Tetra Tech, Inc
Project: Holloman AFB; Alamogordo, NM

File ID: SA111010M1.ICP Date Analyzed: 11/10/10 Methods: SW846 6010C
QC Limits: 95 to 105 % Recovery Run ID: MA8502 Units: ug/l

Time:		07:59	
Sample ID:	HSTD	HSTD1	
Metal	True	Results	% Rec
Aluminum	anr		
Antimony	anr		
Arsenic	4000	4010	100.3
Barium	4000	4000	100.0
Beryllium	anr		
Cadmium	4000	3950	98.8
Calcium			
Chromium	4000	3880	97.0
Cobalt	anr		
Copper	anr		
Iron	anr		
Lead	4000	3960	99.0
Magnesium	anr		
Manganese	anr		
Molybdenum			
Nickel	anr		
Potassium	anr		
Selenium	4000	3990	99.8
Silver	500	493	98.6
Sodium	anr		
Strontium			
Thallium	anr		
Tin			
Titanium			
Vanadium	anr		
Zinc	anr		

(*) Outside of QC limits
(anr) Analyte not requested

LOW CALIBRATION CHECK STANDARDS SUMMARY

Login Number: F77899
Account: TETTNOAK - Tetra Tech, Inc
Project: Holloman AFB; Alamogordo, NM

File ID: SA111010M1.ICP Date Analyzed: 11/10/10 Methods: SW846 6010C
QC Limits: CRI 70-130% CRIA 70-130% Run ID: MA8502 Units: ug/l

Time:			08:19		08:19		02:23	
Sample ID:	CRI	CRIA	CRIA1		CRIA2		CRIA3	
Metal	True	True	Results	% Rec	Results	% Rec	Results	% Rec
Aluminum	400	200	anr					
Antimony	10	5.0						
Arsenic	20	10	10.7	107.0			11.2	112.0
Barium	400	200	204	102.0			206	103.0
Beryllium	10	5.0	anr					
Cadmium	10	5.0	5.2	104.0			5.5	110.0
Calcium	2000	1000						
Chromium	20	10	10.7	107.0			10.1	101.0
Cobalt	100	50	anr					
Copper	50	25	anr					
Iron	600	300	anr					
Lead	10	5.0	4.7	94.0			6.0	120.0
Magnesium	10000	5000	anr					
Manganese	30	15	anr					
Molybdenum	100	50						
Nickel	80	40	anr					
Potassium	20000	10000	anr					
Selenium	20	10	10.7	107.0			8.8	88.0
Silver	20	10	9.3	93.0			9.7	97.0
Sodium	20000	10000	anr					
Strontium	20	10						
Thallium	20	10	anr					
Tin	100	50						
Titanium	20	10						
Vanadium	100	50	anr					
Zinc	40	20	anr					

(*) Outside of QC limits
(anr) Analyte not requested

INTERFERING ELEMENT CHECK STANDARDS SUMMARY
Part 1 - ICSA and ICSAB Standards

Login Number: F77899
Account: TETTNOAK - Tetra Tech, Inc
Project: Holloman AFB; Alamogordo, NM

File ID: SA111010M1.ICP Date Analyzed: 11/10/10 Methods: SW846 6010C
QC Limits: 80 to 120 % Recovery Run ID: MA8502 Units: ug/l

Time:			08:28		08:33		02:27		02:31	
Sample ID:	ICSA	ICSAB	ICSA1		ICSAB1		ICSA2		ICSAB2	
Metal	True	True	Results	% Rec	Results	% Rec	Results	% Rec	Results	% Rec
Aluminum	500000	500000	480000	96.0	475000	95.0	490000	98.0	467000	93.4
Antimony		1000	0.0		1050	105.0	1.0		964	96.4
Arsenic		1000	0.60		1050	105.0	2.4		997	99.7
Barium		500	-2.0		520	104.0	4.1		500	100.0
Beryllium		500	0.0		488	97.6	-0.10		477	95.4
Cadmium		1000	0.0		974	97.4	-0.80		973	97.3
Calcium	500000	500000	448000	89.6	456000	91.2	502000	100.4	490000	98.0
Chromium		500	0.0		415	83.0	-0.80		420	84.0
Cobalt		500	0.30		475	95.0	0.20		504	100.8
Copper		500	0.0		477	95.4	-1.0		454	90.8
Iron	200000	200000	186000	93.0	188000	94.0	197000	98.5	188000	94.0
Lead		1000	0.0		978	97.8	-6.0		1020	102.0
Magnesium	500000	500000	470000	94.0	477000	95.4	523000	104.6	510000	102.0
Manganese		500	0.50		440	88.0	0.40		429	85.8
Molybdenum		1000	0.40		971	97.1	0.40		949	94.9
Nickel		1000	0.60		982	98.2	-0.40		1020	102.0
Potassium			12.7		-16		27.1		10.8	
Selenium		1000	0.40		1020	102.0	1.7		961	96.1
Silver		1000	0.80		1040	104.0	0.80		1060	106.0
Sodium			-300		-960		-330		-940	
Strontium		1000	-5.4		-5.4	0.0*	-6.7		-6.6	0.0*
Thallium		1000	0.0		949	94.9	-3.1		965	96.5
Tin		1000	0.50		881	88.1	0.80		953	95.3
Titanium		1000	3.6		4.1	0.4*	3.9		4.4	0.4*
Vanadium		500	0.30		437	87.4	0.20		425	85.0
Zinc		1000	-4.3		931	93.1	-4.4		979	97.9

(*) Outside of QC limits
(anr) Analyte not requested

Accutest Laboratories Instrument Runlog
Inorganics Analyses

Login Number: F77899
Account: TETTNOAK - Tetra Tech, Inc
Project: Holloman AFB; Alamogordo, NM

File ID: SA111110M1.ICP Date Analyzed: 11/11/10 Methods: SW846 6010C
Analyst: RS Run ID: MA8504
Parameters: As,Ba,Cd,Cr,Pb,Se,Ag

Time	Sample Description	Dilution Factor	PS Recov	Comments
08:18	MA8504-STD1	1		STDA
08:23	MA8504-STD2	1		STDB
08:26	MA8504-STD3	1		STDC
08:30	MA8504-HSTD1	1		
08:34	MA8504-ICV1	1		
08:40	MA8504-ICB1	1		
08:44	MA8504-CRIA1	1		
08:48	MA8504-CRIA2	1		
08:56	MA8504-ICSA1	1		
09:02	MA8504-ICSAB1	1		
09:07	MA8504-CCV1	1		
09:15	MA8504-CCB1	1		
10:03	ZZZZZZ	2		
10:07	ZZZZZZ	4		
10:12	ZZZZZZ	2		
10:16	ZZZZZZ	10		
10:20	ZZZZZZ	10		
10:24	ZZZZZZ	10		
10:28	ZZZZZZ	100		
10:32	ZZZZZZ	2		
10:36	MP19454-MB1	1		
10:40	MP19454-B1	1		
10:44	MA8504-CCV2	1		
10:48	MA8504-CCB2	1		
10:52	MP19454-B2	1		
10:56	ZZZZZZ	10		
11:04	ZZZZZZ	10		
11:08	ZZZZZZ	4		
11:12	ZZZZZZ	1		
11:16	ZZZZZZ	100		
11:20	ZZZZZZ	1		
11:24	ZZZZZZ	1		
11:28	ZZZZZZ	10		

Accutest Laboratories Instrument Runlog
Inorganics Analyses

Login Number: F77899
Account: TETTNOAK - Tetra Tech, Inc
Project: Holloman AFB; Alamogordo, NM

File ID: SA111110M1.ICP Date Analyzed: 11/11/10 Methods: SW846 6010C
Analyst: RS Run ID: MA8504
Parameters: As,Ba,Cd,Cr,Pb,Se,Ag

Time	Sample Description	Dilution Factor	PS Recov	Comments
11:32	MA8504-CCV3	1		
11:36	MA8504-CCB3	1		
11:40	ZZZZZZ	4		
11:44	ZZZZZZ	2		
11:48	ZZZZZZ	10		
11:52	ZZZZZZ	10		
11:57	ZZZZZZ	2		
12:01	ZZZZZZ	2		
12:05	ZZZZZZ	2		
12:09	ZZZZZZ	10		
12:13	F77899-13	10		
12:17	MP19447-D1	10		
12:21	MA8504-CCV4	1		
12:25	MA8504-CCB4	1		
12:29	MP19447-S1	10		
12:34	MP19447-S2	10		
12:38	MP19447-PS1	10		
12:42	MP19447-SD1	50		
12:46	F77899-14	10		
12:51	F77899-15	10		
12:55	F77899-16	10		
12:59	ZZZZZZ	10		
13:04	ZZZZZZ	10		
13:08	ZZZZZZ	10		
13:12	MA8504-CCV5	1		
13:16	MA8504-CCB5	1		
13:20	ZZZZZZ	10		
13:24	ZZZZZZ	10		
13:29	ZZZZZZ	10		
13:33	ZZZZZZ	10		
13:37	ZZZZZZ	10		
13:42	ZZZZZZ	10		
13:46	ZZZZZZ	10		

Accutest Laboratories Instrument Runlog
Inorganics Analyses

Login Number: F77899
Account: TETTNOAK - Tetra Tech, Inc
Project: Holloman AFB; Alamogordo, NM

File ID: SA111110M1.ICP Date Analyzed: 11/11/10 Methods: SW846 6010C
Analyst: RS Run ID: MA8504
Parameters: As,Ba,Cd,Cr,Pb,Se,Ag

Time	Sample Description	Dilution Factor	PS Recov	Comments
13:51	ZZZZZZ	10		
13:55	ZZZZZZ	10		
13:59	F77899-13	4		
14:09	MA8504-CCV6	1		
14:13	MA8504-CCB6	1		
14:17	MP19447-D1	4		
14:22	MP19447-S1	4		
14:28	MP19447-S2	4		
14:33	MP19447-PS1	4		
14:37	MP19447-SD1	20		
14:41	F77899-14	4		
14:46	F77899-15	4		
14:50	F77899-16	4		
14:54	ZZZZZZ	4		
14:59	ZZZZZZ	4		
15:03	MA8504-CCV7	1		
15:07	MA8504-CCB7	1		
15:11	ZZZZZZ	4		
15:15	ZZZZZZ	4		
15:20	ZZZZZZ	4		
15:24	ZZZZZZ	4		
15:28	ZZZZZZ	4		
15:33	ZZZZZZ	4		
15:37	ZZZZZZ	4		
15:41	ZZZZZZ	4		
15:46	MP19463-MB1	1		
15:50	MP19463-B1	1		
15:54	MA8504-CCV8	1		
15:58	MA8504-CCB8	1		
16:02	F77889-38	1		(sample used for QC only; not part of login F77899)
16:06	MP19463-D1	1		
16:11	MP19463-SD1	5		
16:15	MP19463-PS1	1		

Accutest Laboratories Instrument Runlog
Inorganics Analyses

Login Number: F77899
Account: TETTNOAK - Tetra Tech, Inc
Project: Holloman AFB; Alamogordo, NM

File ID: SA111110M1.ICP Date Analyzed: 11/11/10 Methods: SW846 6010C
Analyst: RS Run ID: MA8504
Parameters: As,Ba,Cd,Cr,Pb,Se,Ag

Time	Sample Description	Dilution Factor	PS Recov	Comments
16:19	MP19463-S1	1		
16:23	MP19463-S2	1		
16:27	ZZZZZZ	1		
16:31	ZZZZZZ	1		
16:36	ZZZZZZ	1		
16:40	ZZZZZZ	1		
16:44	MA8504-CCV9	1		
16:48	MA8504-CCB9	1		
17:07	MA8504-CCV10	1		
17:12	MA8504-CCB10	1		
17:16	ZZZZZZ	1		
17:20	ZZZZZZ	1		
17:24	ZZZZZZ	1		
17:29	ZZZZZZ	1		
17:33	ZZZZZZ	1		
17:37	ZZZZZZ	1		
17:41	ZZZZZZ	1		
17:45	ZZZZZZ	1		
17:53	ZZZZZZ	1		
17:58	MA8504-CCV11	1		
18:01	MA8504-CCB11	1		
18:06	ZZZZZZ	1		
18:10	ZZZZZZ	1		
18:14	ZZZZZZ	1		
18:18	ZZZZZZ	1		
18:22	MP19456-MB1	1		
18:26	MP19456-B1	1		
18:30	F77915-1	1		(sample used for QC only; not part of login F77899)
18:34	MP19456-D1	1		
18:38	MP19456-SD1	5		
18:42	MP19456-PS1	1		
18:46	MA8504-CCV12	1		
18:50	MA8504-CCB12	1		

Accutest Laboratories Instrument Runlog
Inorganics Analyses

Login Number: F77899
Account: TETTNOAK - Tetra Tech, Inc
Project: Holloman AFB; Alamogordo, NM

File ID: SA111110M1.ICP Date Analyzed: 11/11/10 Methods: SW846 6010C
Analyst: RS Run ID: MA8504
Parameters: As,Ba,Cd,Cr,Pb,Se,Ag

	Time	Sample Description	Dilution Factor	PS Recov	Comments
	18:54	MP19456-S1	1		
	18:58	MP19456-S2	1		
	19:02	ZZZZZZ	1		
	19:06	ZZZZZZ	1		
	19:10	ZZZZZZ	1		
	19:14	ZZZZZZ	1		
	19:18	ZZZZZZ	1		
	19:22	ZZZZZZ	1		
	19:26	ZZZZZZ	1		
	19:31	F77899-17	1		
	19:35	MA8504-CCV13	1		
	19:39	MA8504-CCB13	1		
	19:43	F77899-18	1		
	19:47	F77899-19	1		
	19:52	F77899-20	1		
---------->	Last reportable sample/prep for job F77899				
	19:56	ZZZZZZ	1		
	20:00	ZZZZZZ	1		
	20:05	F77889-10	4		(sample used for QC only; not part of login F77899)
	20:09	MP19452-D1	4		
	20:13	MP19452-S1	4		
	20:17	MP19452-S2	4		
	20:21	MP19452-PS1	4		
	20:25	MA8504-CCV14	1		
	20:29	MA8504-CCB14	1		
	20:33	MP19452-SD1	20		
	20:37	MP19472-MB1	1		
	20:41	MP19472-B1	1		
	20:45	F77965-1	1		(sample used for QC only; not part of login F77899)
	20:50	MP19472-D1	1		
	20:54	MP19472-SD1	5		
	20:58	MP19472-PS1	1		
	21:02	MP19472-S1	1		
	21:06	MP19472-S2	1		

Accutest Laboratories Instrument Runlog
Inorganics Analyses

Login Number: F77899
Account: TETTNOAK - Tetra Tech, Inc
Project: Holloman AFB; Alamogordo, NM

File ID: SA111110M1.ICP Date Analyzed: 11/11/10 Methods: SW846 6010C
Analyst: RS Run ID: MA8504
Parameters: As,Ba,Cd,Cr,Pb,Se,Ag

Time	Sample Description	Dilution Factor	PS Recov	Comments
21:10	ZZZZZZ	1		
21:14	MA8504-CCV15	1		
21:18	MA8504-CCB15	1		
21:22	ZZZZZZ	1		
21:26	ZZZZZZ	1		
21:30	ZZZZZZ	1		
21:34	ZZZZZZ	1		
21:38	ZZZZZZ	1		
21:43	ZZZZZZ	1		
21:47	ZZZZZZ	1		
21:51	ZZZZZZ	1		
21:55	ZZZZZZ	1		
21:59	ZZZZZZ	1		
22:03	MA8504-CCV16	1		
22:07	MA8504-CCB16	1		
22:11	ZZZZZZ	1		
22:16	ZZZZZZ	1		
22:20	ZZZZZZ	1		
22:24	MP19473-MB1	1		
22:28	MP19473-B1	1		
22:32	F77970-2	1		(sample used for QC only; not part of login F77899)
22:36	MP19473-D1	1		
22:40	MP19473-SD1	5		
22:44	MP19473-PS1	1		
22:48	MP19473-S1	1		
22:52	MA8504-CCV17	1		
22:56	MA8504-CCB17	1		
23:00	MP19473-S2	1		
23:04	ZZZZZZ	1		
23:08	ZZZZZZ	1		
23:13	ZZZZZZ	1		
23:17	MA8504-CRIA3	1		
23:21	MA8504-ICSA2	1		

Accutest Laboratories Instrument Runlog
Inorganics Analyses

Login Number: F77899
Account: TETTNOAK - Tetra Tech, Inc
Project: Holloman AFB; Alamogordo, NM

File ID: SA111110M1.ICP Date Analyzed: 11/11/10 Methods: SW846 6010C
Analyst: RS Run ID: MA8504
Parameters: As,Ba,Cd,Cr,Pb,Se,Ag

Time	Sample Description	Dilution Factor	PS Recov	Comments
23:25	MA8504-ICSAB2	1		
23:29	MA8504-CCV18	1		
23:33	MA8504-CCB18	1		

----------> Last reportable CCB for job F77899
Refer to raw data for calibration curve and standards.

8.2
8

INTERNAL STANDARD SUMMARY

Login Number: F77899
Account: TETTNOAK - Tetra Tech, Inc
Project: Holloman AFB; Alamogordo, NM

File ID: SA111110M1.ICP Date Analyzed: 11/11/10 Methods: SW846 6010C
Analyst: RS Run ID: MA8504
Parameters: As,Ba,Cd,Cr,Pb,Se,Ag

Time	Sample Description	Istd#1	Istd#2	Istd#3	Istd#4	Istd#5
08:18	MA8504-STD1	2011	1613	26991	11238	1071
08:23	MA8504-STD2	1910	1562	25249	10829	993
08:26	MA8504-STD3	1851	1603	25131	10753	940
08:30	MA8504-HSTD1	1832	1572	24770	10693	934
08:34	MA8504-ICV1	1898	1593	25436	10795	990
08:40	MA8504-ICB1	1958 R	1591 R	26187 R	10961 R	1058 R
08:44	MA8504-CRIA1	1963	1576	26071	10962	1067
08:48	MA8504-CRIA2	1991	1588	999999 !	10998	999999 !
08:56	MA8504-ICSA1	1672	1582	22190	10114	849
09:02	MA8504-ICSAB1	1680	1587	22497	10113	843
09:07	MA8504-CCV1	1901	1582	25090	10598	987
09:15	MA8504-CCB1	1985	1591	26385	10756	1061
10:03	ZZZZZZ	1889	1511	24997	10653	985
10:07	ZZZZZZ	1807	1456	24117	10528	910
10:12	ZZZZZZ	1826	1453	24469	10463	961
10:16	ZZZZZZ	2050	1681	27147	11529	1033
10:20	ZZZZZZ	1943	1564	25692	10697	1040
10:24	ZZZZZZ	1957	1551	25751	10730	1047
10:28	ZZZZZZ	1982	1582	26100	10839	1067
10:32	ZZZZZZ	1890	1544	25329	10961	994
10:36	MP19454-MB1	1888	1489	24692	10179	1025
10:40	MP19454-B1	1838	1488	24027	9961	974
10:44	MA8504-CCV2	1937	1608	25788	10845	1003
10:48	MA8504-CCB2	2020	1634	27076	10995	1084
10:52	MP19454-B2	1799	1461	23822	10115	971
10:56	ZZZZZZ	1934	1719	25785	10835	1050
11:04	ZZZZZZ	1958	1630	26011	10820	1058
11:08	ZZZZZZ	1833	1800	24764	10582	991
11:12	ZZZZZZ	1701	2083 !	22913	10114	856
11:16	ZZZZZZ	2029	1656	27273	11088	1097
11:20	ZZZZZZ	1845	1470	24457	10316	986
11:24	ZZZZZZ	1759	1856	23935	10379	919
11:28	ZZZZZZ	2030	1724	26984	11175	1080

INTERNAL STANDARD SUMMARY

Login Number: F77899
Account: TETTNOAK - Tetra Tech, Inc
Project: Holloman AFB; Alamogordo, NM

File ID: SA111110M1.ICP Date Analyzed: 11/11/10 Methods: SW846 6010C
Analyst: RS Run ID: MA8504
Parameters: As,Ba,Cd,Cr,Pb,Se,Ag

Time	Sample Description	Istd#1	Istd#2	Istd#3	Istd#4	Istd#5
11:32	MA8504-CCV3	1925	1634	25430	10547	1008
11:36	MA8504-CCB3	2028	1641	27062	10886	1084
11:40	ZZZZZZ	2118	2068 !	28237	12015	1014
11:44	ZZZZZZ	2017	2069 !	26638	11368	981
11:48	ZZZZZZ	2051	1773	26961	10968	1077
11:52	ZZZZZZ	2036	1708	27081	11021	1071
11:57	ZZZZZZ	2105	2178 !	27902	11548	990
12:01	ZZZZZZ	2045	2126 !	27079	11295	1003
12:05	ZZZZZZ	2061	2128 !	26974	11255	985
12:09	ZZZZZZ	2046	1743	27161	11067	1078
12:13	F77899-13	1836	1493	24445	10320	959
12:17	MP19447-D1	1840	1488	24552	10452	971
12:21	MA8504-CCV4	1873	1581	24798	10279	984
12:25	MA8504-CCB4	2025	1643	26943	10804	1090
12:29	MP19447-S1	1830	1493	24755	10366	967
12:34	MP19447-S2	1816	1475	24407	10374	956
12:38	MP19447-PS1	1835	1488	24514	10358	961
12:42	MP19447-SD1	1942	1559	25970	10642	1054
12:46	F77899-14	1824	1466	24621	10347	969
12:51	F77899-15	1820	1484	24366	10348	965
12:55	F77899-16	1832	1460	24554	10335	968
12:59	ZZZZZZ	1852	1463	24669	10399	967
13:04	ZZZZZZ	1818	1464	24504	10448	968
13:08	ZZZZZZ	1847	1491	24793	10424	973
13:12	MA8504-CCV5	1884	1580	25359	10558	991
13:16	MA8504-CCB5	1987	1587	26928	10815	1076
13:20	ZZZZZZ	1821	1481	24564	10478	946
13:24	ZZZZZZ	1826	1454	24410	10314	967
13:29	ZZZZZZ	1826	1449	24649	10440	966
13:33	ZZZZZZ	1799	1447	24524	10507	959
13:37	ZZZZZZ	1811	1422	24130	10754	971
13:42	ZZZZZZ	1791	1425	24397	10414	950
13:46	ZZZZZZ	1828	1461	24938	10671	970

INTERNAL STANDARD SUMMARY

Login Number: F77899
Account: TETTNOAK - Tetra Tech, Inc
Project: Holloman AFB; Alamogordo, NM

File ID: SA111110M1.ICP Date Analyzed: 11/11/10 Methods: SW846 6010C
Analyst: RS Run ID: MA8504
Parameters: As,Ba,Cd,Cr,Pb,Se,Ag

Time	Sample Description	Istd#1	Istd#2	Istd#3	Istd#4	Istd#5
13:51	ZZZZZZ	1808	1464	24581	10508	972
13:55	ZZZZZZ	1790	1444	24296	10376	954
13:59	F77899-13	1689	1352	23282	10288	864
14:09	MA8504-CCV6	1838	1546	25102	10741	988
14:13	MA8504-CCB6	1956	1570	26314	10961	1071
14:17	MP19447-D1	1685	1400	23535	10231	875
14:22	MP19447-S1	1689	1360	23378	10325	881
14:28	MP19447-S2	1635	1346	22826	10252	849
14:33	MP19447-PS1	1651	1335	22837	10288	850
14:37	MP19447-SD1	1820	1458	25117	10813	999
14:41	F77899-14	1678	1348	23544	10513	886
14:46	F77899-15	1635	1342	23155	10168	861
14:50	F77899-16	1662	1344	23150	10541	879
14:54	ZZZZZZ	1516	1299	22352	10367	791
14:59	ZZZZZZ	1678	1344	23568	10598	894
15:03	MA8504-CCV7	1765	1498	24735	10783	970
15:07	MA8504-CCB7	1912	1531	26495	11212	1072
15:11	ZZZZZZ	1677	1365	23550	10744	869
15:15	ZZZZZZ	1718	1397	24118	11090	873
15:20	ZZZZZZ	1652	1319	22938	10419	882
15:24	ZZZZZZ	1642	1305	23228	10614	867
15:28	ZZZZZZ	1625	1321	22888	10592	863
15:33	ZZZZZZ	1603	1292	22545	10472	855
15:37	ZZZZZZ	1664	1333	23277	10739	868
15:41	ZZZZZZ	1620	1298	22936	10592	864
15:46	MP19463-MB1	1817	1470	25473	11107	1035
15:50	MP19463-B1	1777	1456	24866	11015	1000
15:54	MA8504-CCV8	1779	1481	24915	10974	976
15:58	MA8504-CCB8	1843	1493	25998	11261	1049
16:02	F77889-38	1650	1326	23109	10743	894
16:06	MP19463-D1	1688	1337	23445	10685	905
16:11	MP19463-SD1	1815	1434	25214	11140	1016
16:15	MP19463-PS1	1646	1330	23031	10617	887

INTERNAL STANDARD SUMMARY

Login Number: F77899
Account: TETTNOAK - Tetra Tech, Inc
Project: Holloman AFB; Alamogordo, NM

File ID: SA111110M1.ICP Date Analyzed: 11/11/10 Methods: SW846 6010C
Analyst: RS Run ID: MA8504
Parameters: As,Ba,Cd,Cr,Pb,Se,Ag

Time	Sample Description	Istd#1	Istd#2	Istd#3	Istd#4	Istd#5
16:19	MP19463-S1	1665	1359	23265	10686	884
16:23	MP19463-S2	1671	1356	23359	10760	883
16:27	ZZZZZZ	1689	1350	23704	10729	934
16:31	ZZZZZZ	1664	1335	23357	10669	925
16:36	ZZZZZZ	1679	1347	23215	10536	918
16:40	ZZZZZZ	1674	1339	23376	10497	900
16:44	MA8504-CCV9	1776	1475	24839	11077	975
16:48	MA8504-CCB9	1853	1501	25803	11154	1046
17:07	MA8504-CCV10	1808	1511	24853	10891	986
17:12	MA8504-CCB10	1911	1529	26441	11180	1064
17:16	ZZZZZZ	1732	1386	24201	10888	961
17:20	ZZZZZZ	1603	1303	22361	10475	767
17:24	ZZZZZZ	1719	1359	23425	10491	911
17:29	ZZZZZZ	1743	1395	24222	10762	953
17:33	ZZZZZZ	1726	1394	24107	10694	961
17:37	ZZZZZZ	1678	1347	23485	10539	892
17:41	ZZZZZZ	1739	1387	24302	10826	951
17:45	ZZZZZZ	1861	1472	25834	11042	1048
17:53	ZZZZZZ	1777	1390	24317	10588	996
17:58	MA8504-CCV11	1822	1508	25310	10927	994
18:01	MA8504-CCB11	1870	1540	26396	11082	1053
18:06	ZZZZZZ	1843	1482	25507	10964	1046
18:10	ZZZZZZ	1846	1473	25633	10843	1033
18:14	ZZZZZZ	1853	1481	25885	11022	1049
18:18	ZZZZZZ	1830	1474	25419	10929	1049
18:22	MP19456-MB1	1829	1456	24902	10546	1026
18:26	MP19456-B1	1797	1450	24409	10454	992
18:30	F77915-1	1859	1475	25661	10673	1033
18:34	MP19456-D1	1838	1468	25528	10724	1031
18:38	MP19456-SD1	1869	1521	25880	10913	1050
18:42	MP19456-PS1	1806	1453	24587	10563	1012
18:46	MA8504-CCV12	1859	1566	25490	10986	1007
18:50	MA8504-CCB12	1936	1566	26660	11045	1075

INTERNAL STANDARD SUMMARY

Login Number: F77899
Account: TETTNOAK - Tetra Tech, Inc
Project: Holloman AFB; Alamogordo, NM

File ID: SA111110M1.ICP Date Analyzed: 11/11/10 Methods: SW846 6010C
Analyst: RS Run ID: MA8504
Parameters: As,Ba,Cd,Cr,Pb,Se,Ag

Time	Sample Description	Istd#1	Istd#2	Istd#3	Istd#4	Istd#5
18:54	MP19456-S1	1787	1437	24314	10585	985
18:58	MP19456-S2	1773	1460	24115	10472	979
19:02	ZZZZZZ	1845	1484	25032	10820	1014
19:06	ZZZZZZ	1863	1475	25090	10633	1029
19:10	ZZZZZZ	1887	1486	25681	10943	1018
19:14	ZZZZZZ	1876	1519	25602	10935	1027
19:18	ZZZZZZ	1919	1521	25927	11213	1012
19:22	ZZZZZZ	1873	1510	25653	11041	1009
19:26	ZZZZZZ	1795	1498	24289	10943	911
19:31	F77899-17	1485	1219	21031	9665	709
19:35	MA8504-CCV13	1759	1455	24876	11163	972
19:39	MA8504-CCB13	1837	1490	25944	11296	1050
19:43	F77899-18	1402	1181	20546	10076	689
19:47	F77899-19	1381	1139	20265	10148	659
19:52	F77899-20	1401	1156	20367	10095	693
19:56	ZZZZZZ	2057	2061 !	29326	13941 !	856
20:00	ZZZZZZ	3014 !	2888 !	42501 !	19624 !	877
20:05	F77889-10	1776	1411	25417	11454	1030
20:09	MP19452-D1	1738	1315	23828	11205	1018
20:13	MP19452-S1	1690	1382	24484	11247	991
20:17	MP19452-S2	1703	1359	24222	11240	994
20:21	MP19452-PS1	1697	1367	24304	11218	997
20:25	MA8504-CCV14	1682	1410	23903	11162	954
20:29	MA8504-CCB14	1785	1447	25553	11339	1045
20:33	MP19452-SD1	1771	1418	24876	11255	1041
20:37	MP19472-MB1	1874	1491	26201	11461	1081
20:41	MP19472-B1	1849	1460	26075	11580	1079
20:45	F77965-1	1795	1438	25545	11713	1022
20:50	MP19472-D1	1772	1427	25245	11495	1008
20:54	MP19472-SD1	1791	1443	25388	11380	1045
20:58	MP19472-PS1	1756	1422	24946	11535	998
21:02	MP19472-S1	1765	1418	25001	11504	1006
21:06	MP19472-S2	1756	1412	24835	11469	1000

INTERNAL STANDARD SUMMARY

Login Number: F77899
Account: TETTNOAK - Tetra Tech, Inc
Project: Holloman AFB; Alamogordo, NM

File ID: SA111110M1.ICP Date Analyzed: 11/11/10 Methods: SW846 6010C
Analyst: RS Run ID: MA8504
Parameters: As,Ba,Cd,Cr,Pb,Se,Ag

Time	Sample Description	Istd#1	Istd#2	Istd#3	Istd#4	Istd#5
21:10	ZZZZZZ	1710	1378	24347	11191	1003
21:14	MA8504-CCV15	1670	1394	23766	11029	942
21:18	MA8504-CCB15	1801	1454	25402	11212	1039
21:22	ZZZZZZ	1740	1415	24897	11305	1035
21:26	ZZZZZZ	1712	1384	24549	11101	1016
21:30	ZZZZZZ	1722	1334	23476	11177	1007
21:34	ZZZZZZ	1702	1335	23543	11053	998
21:38	ZZZZZZ	1688	1340	24019	11160	985
21:43	ZZZZZZ	1779	1402	25409	11398	1048
21:47	ZZZZZZ	1740	1419	25145	11625	1005
21:51	ZZZZZZ	1697	1359	24297	11213	1011
21:55	ZZZZZZ	1670	1343	24185	11230	992
21:59	ZZZZZZ	1702	1393	24617	11364	1012
22:03	MA8504-CCV16	1696	1418	24013	11110	958
22:07	MA8504-CCB16	1812	1442	25633	11310	1046
22:11	ZZZZZZ	1774	1415	24969	11308	1044
22:16	ZZZZZZ	1883	1514	26692	12171	1034
22:20	ZZZZZZ	1780	1396	24955	11404	1033
22:24	MP19473-MB1	1775	1439	25066	11643	1037
22:28	MP19473-B1	1720	1407	24174	11124	985
22:32	F77970-2	1769	1432	24940	11245	1035
22:36	MP19473-D1	1781	1420	25121	11336	1042
22:40	MP19473-SD1	1806	1410	24685	10797	1044
22:44	MP19473-PS1	1751	1428	24828	11315	1015
22:48	MP19473-S1	1760	1425	24484	11105	987
22:52	MA8504-CCV17	1726	1408	24276	11152	957
22:56	MA8504-CCB17	1826	1454	25700	11338	1048
23:00	MP19473-S2	1700	1436	24789	11210	973
23:04	ZZZZZZ	1770	1418	25119	11305	1047
23:08	ZZZZZZ	1754	1402	24776	11261	1042
23:13	ZZZZZZ	1742	1430	25184	11273	1030
23:17	MA8504-CRIA3	1782	1412	24975	11238	1033
23:21	MA8504-ICSA2	1509	1426	21415	10547	817

INTERNAL STANDARD SUMMARY

Login Number: F77899
Account: TETTNOAK - Tetra Tech, Inc
Project: Holloman AFB; Alamogordo, NM

File ID: SA111110M1.ICP Date Analyzed: 11/11/10 Methods: SW846 6010C
Analyst: RS Run ID: MA8504
Parameters: As,Ba,Cd,Cr,Pb,Se,Ag

Time	Sample Description	Istd#1	Istd#2	Istd#3	Istd#4	Istd#5
23:25	MA8504-ICSAB2	1516	1415	21543	10567	818
23:29	MA8504-CCV18	1701	1435	24126	11062	953
23:33	MA8504-CCB18	1785	1435	25434	11257	1029

R = Reference for ISTD limits. ! = Outside limits.

LEGEND:

Istd#	Parameter	Limits
Istd#1	Yttrium (2243)	60-125 %
Istd#2	Yttrium (2422)	60-125 %
Istd#3	Yttrium (3242)	60-125 %
Istd#4	Yttrium (3710)	60-125 %
Istd#5	Indium	60-125 %

BLANK RESULTS SUMMARY
Part 1 - Initial and Continuing Calibration Blanks

Login Number: F77899
Account: TETTNOAK - Tetra Tech, Inc
Project: Holloman AFB; Alamogordo, NM

File ID: SA111110M1.ICP Date Analyzed: 11/11/10 Methods: SW846 6010C
QC Limits: result < RL Run ID: MA8504 Units: ug/l

Time:			08:40		09:15		10:48		11:36	
Sample ID:			ICB1		CCB1		CCB2		CCB3	
Metal	RL	IDL	raw	final	raw	final	raw	final	raw	final
Aluminum	200	20	anr							
Antimony	6.0	1	anr							
Arsenic	10	1	-0.10	<10	0.20	<10	0.40	<10	-0.40	<10
Barium	200	1	1.9	<200	1.8	<200	1.1	<200	0.50	<200
Beryllium	4.0	.1	anr							
Cadmium	5.0	.1	-0.10	<5.0	0.30	<5.0	0.30	<5.0	0.30	<5.0
Calcium	1000	50	anr							
Chromium	10	1	-0.50	<10	-0.10	<10	-0.30	<10	-0.10	<10
Cobalt	50	1	anr							
Copper	25	1	anr							
Iron	300	34	anr							
Lead	5.0	1	-1.2	<5.0	0.0	<5.0	-0.50	<5.0	-0.20	<5.0
Magnesium	5000	50	anr							
Manganese	15	1	anr							
Molybdenum	50	1								
Nickel	40	1	anr							
Potassium	10000	50	anr							
Selenium	10	2	-0.80	<10	-1.1	<10	1.7	<10	-1.1	<10
Silver	10	1	-0.20	<10	-0.50	<10	-0.20	<10	0.40	<10
Sodium	10000	750	anr							
Strontium	10	1								
Thallium	10	1	anr							
Tin	50	1								
Titanium	10	1.1								
Vanadium	50	1	anr							
Zinc	20	1	anr							

(*) Outside of QC limits
(anr) Analyte not requested

BLANK RESULTS SUMMARY
Part 1 - Initial and Continuing Calibration Blanks

Login Number: F77899
Account: TETTNOAK - Tetra Tech, Inc
Project: Holloman AFB; Alamogordo, NM

File ID: SA111110M1.ICP Date Analyzed: 11/11/10 Methods: SW846 6010C
QC Limits: result < RL Run ID: MA8504 Units: ug/l

Time:			12:25		13:16		14:13		15:07	
Sample ID:			CCB4		CCB5		CCB6		CCB7	
Metal	RL	IDL	raw	final	raw	final	raw	final	raw	final
Aluminum	200	20	anr							
Antimony	6.0	1	anr							
Arsenic	10	1	-0.10	<10	-0.90	<10	-0.20	<10	-1.1	<10
Barium	200	1	0.50	<200	-0.30	<200	-0.20	<200	-2.5	<200
Beryllium	4.0	.1	anr							
Cadmium	5.0	.1	0.30	<5.0	0.30	<5.0	0.20	<5.0	0.20	<5.0
Calcium	1000	50	anr							
Chromium	10	1	-0.10	<10	0.10	<10	-0.50	<10	0.20	<10
Cobalt	50	1	anr							
Copper	25	1	anr							
Iron	300	34	anr							
Lead	5.0	1	0.30	<5.0	0.10	<5.0	0.10	<5.0	-0.30	<5.0
Magnesium	5000	50	anr							
Manganese	15	1	anr							
Molybdenum	50	1								
Nickel	40	1	anr							
Potassium	10000	50	anr							
Selenium	10	2	1.0	<10	1.2	<10	0.30	<10	1.4	<10
Silver	10	1	-0.50	<10	-0.40	<10	-0.30	<10	-0.30	<10
Sodium	10000	750	anr							
Strontium	10	1								
Thallium	10	1	anr							
Tin	50	1								
Titanium	10	1.1								
Vanadium	50	1	anr							
Zinc	20	1	anr							

(*) Outside of QC limits
(anr) Analyte not requested

BLANK RESULTS SUMMARY
Part 1 - Initial and Continuing Calibration Blanks

Login Number: F77899
Account: TETTNOAK - Tetra Tech, Inc
Project: Holloman AFB; Alamogordo, NM

File ID: SA111110M1.ICP Date Analyzed: 11/11/10 Methods: SW846 6010C
QC Limits: result < RL Run ID: MA8504 Units: ug/l

Time:			15:58		16:48		17:12		18:01	
Sample ID:			CCB8		CCB9		CCB10		CCB11	
Metal	RL	IDL	raw	final	raw	final	raw	final	raw	final
Aluminum	200	20	anr							
Antimony	6.0	1	anr							
Arsenic	10	1	-1.5	<10	-1.5	<10	0.90	<10	-0.60	<10
Barium	200	1	-3.0	<200	-1.8	<200	-0.30	<200	0.70	<200
Beryllium	4.0	.1	anr							
Cadmium	5.0	.1	0.20	<5.0	0.30	<5.0	0.30	<5.0	0.20	<5.0
Calcium	1000	50	anr							
Chromium	10	1	-0.20	<10	0.20	<10	0.60	<10	0.20	<10
Cobalt	50	1	anr							
Copper	25	1	anr							
Iron	300	34	anr							
Lead	5.0	1	-0.90	<5.0	-0.90	<5.0	0.0	<5.0	-0.60	<5.0
Magnesium	5000	50	anr							
Manganese	15	1	anr							
Molybdenum	50	1								
Nickel	40	1	anr							
Potassium	10000	50	anr							
Selenium	10	2	2.1	<10	3.5	<10	0.90	<10	0.50	<10
Silver	10	1	-0.30	<10	-0.50	<10	-0.10	<10	0.40	<10
Sodium	10000	750	anr							
Strontium	10	1								
Thallium	10	1	anr							
Tin	50	1								
Titanium	10	1.1								
Vanadium	50	1	anr							
Zinc	20	1	anr							

(*) Outside of QC limits
(anr) Analyte not requested

BLANK RESULTS SUMMARY
Part 1 - Initial and Continuing Calibration Blanks

Login Number: F77899
Account: TETTNOAK - Tetra Tech, Inc
Project: Holloman AFB; Alamogordo, NM

File ID: SA111110M1.ICP Date Analyzed: 11/11/10 Methods: SW846 6010C
QC Limits: result < RL Run ID: MA8504 Units: ug/l

Time:			18:50		19:39		20:29		21:18	
Sample ID:			CCB12		CCB13		CCB14		CCB15	
Metal	RL	IDL	raw	final	raw	final	raw	final	raw	final
Aluminum	200	20	anr							
Antimony	6.0	1	anr							
Arsenic	10	1	1.4	<10	1.6	<10	1.3	<10	0.60	<10
Barium	200	1	0.70	<200	-0.80	<200	-2.3	<200	-1.9	<200
Beryllium	4.0	.1	anr							
Cadmium	5.0	.1	0.30	<5.0	0.30	<5.0	0.20	<5.0	0.20	<5.0
Calcium	1000	50	anr							
Chromium	10	1	0.40	<10	0.0	<10	0.0	<10	0.0	<10
Cobalt	50	1	anr							
Copper	25	1	anr							
Iron	300	34	anr							
Lead	5.0	1	0.0	<5.0	-0.20	<5.0	-0.50	<5.0	0.30	<5.0
Magnesium	5000	50	anr							
Manganese	15	1	anr							
Molybdenum	50	1								
Nickel	40	1	anr							
Potassium	10000	50	anr							
Selenium	10	2	0.50	<10	1.2	<10	1.2	<10	2.3	<10
Silver	10	1	0.20	<10	0.0	<10	-0.20	<10	-0.40	<10
Sodium	10000	750	anr							
Strontium	10	1								
Thallium	10	1	anr							
Tin	50	1								
Titanium	10	1.1								
Vanadium	50	1	anr							
Zinc	20	1	anr							

(*) Outside of QC limits
(anr) Analyte not requested

BLANK RESULTS SUMMARY
Part 1 - Initial and Continuing Calibration Blanks

Login Number: F77899
Account: TETTNOAK - Tetra Tech, Inc
Project: Holloman AFB; Alamogordo, NM

File ID: SA111110M1.ICP Date Analyzed: 11/11/10 Methods: SW846 6010C
QC Limits: result < RL Run ID: MA8504 Units: ug/l

Time:			22:07		22:56		23:33	
Sample ID:			CCB16		CCB17		CCB18	
Metal	RL	IDL	raw	final	raw	final	raw	final
Aluminum	200	20	anr					
Antimony	6.0	1	anr					
Arsenic	10	1	0.80	<10	1.3	<10	-0.20	<10
Barium	200	1	-2.9	<200	-4.0	<200	-2.7	<200
Beryllium	4.0	.1	anr					
Cadmium	5.0	.1	0.30	<5.0	0.20	<5.0	0.30	<5.0
Calcium	1000	50	anr					
Chromium	10	1	0.10	<10	0.10	<10	0.20	<10
Cobalt	50	1	anr					
Copper	25	1	anr					
Iron	300	34	anr					
Lead	5.0	1	-1.0	<5.0	-1.3	<5.0	0.0	<5.0
Magnesium	5000	50	anr					
Manganese	15	1	anr					
Molybdenum	50	1						
Nickel	40	1	anr					
Potassium	10000	50	anr					
Selenium	10	2	-0.60	<10	2.6	<10	2.4	<10
Silver	10	1	-0.20	<10	-0.10	<10	-0.30	<10
Sodium	10000	750	anr					
Strontium	10	1						
Thallium	10	1	anr					
Tin	50	1						
Titanium	10	1.1						
Vanadium	50	1	anr					
Zinc	20	1	anr					

(*) Outside of QC limits
(anr) Analyte not requested

CALIBRATION CHECK STANDARDS SUMMARY
Initial and Continuing Calibration Checks

Login Number: F77899
Account: TETTNOAK - Tetra Tech, Inc
Project: Holloman AFB; Alamogordo, NM

File ID: SA111110M1.ICP Date Analyzed: 11/11/10 Methods: SW846 6010C
QC Limits: 90 to 110 % Recovery Run ID: MA8504 Units: ug/l

Time:		08:34			09:07			10:44	
Sample ID:	ICV	ICV1		CCV	CCV1		CCV	CCV2	
Metal	True	Results	% Rec	True	Results	% Rec	True	Results	% Rec
Aluminum	anr								
Antimony	anr								
Arsenic	2000	2000	100.0	2000	2020	101.0	2000	2010	100.5
Barium	2000	2050	102.5	2000	2100	105.0	2000	2050	102.5
Beryllium	anr								
Cadmium	2000	2060	103.0	2000	2050	102.5	2000	2030	101.5
Calcium	anr								
Chromium	2000	2050	102.5	2000	2100	105.0	2000	2090	104.5
Cobalt	anr								
Copper	anr								
Iron	anr								
Lead	2000	2020	101.0	2000	2020	101.0	2000	2010	100.5
Magnesium	anr								
Manganese	anr								
Molybdenum									
Nickel	anr								
Potassium	anr								
Selenium	2000	2040	102.0	2000	2030	101.5	2000	2010	100.5
Silver	250	245	98.0	250	259	103.6	250	256	102.4
Sodium	anr								
Strontium									
Thallium	anr								
Tin									
Titanium									
Vanadium	anr								
Zinc	anr								

(*) Outside of QC limits
(anr) Analyte not requested

CALIBRATION CHECK STANDARDS SUMMARY
Initial and Continuing Calibration Checks

Login Number: F77899
Account: TETTNOAK - Tetra Tech, Inc
Project: Holloman AFB; Alamogordo, NM

File ID: SA111110M1.ICP Date Analyzed: 11/11/10 Methods: SW846 6010C
QC Limits: 90 to 110 % Recovery Run ID: MA8504 Units: ug/l

Time:		11:32			12:21			13:12	
Sample ID:	CCV	CCV3		CCV	CCV4		CCV	CCV5	
Metal	True	Results	% Rec	True	Results	% Rec	True	Results	% Rec
Aluminum	anr								
Antimony	anr								
Arsenic	2000	2020	101.0	2000	2080	104.0	2000	2040	102.0
Barium	2000	2050	102.5	2000	2100	105.0	2000	2050	102.5
Beryllium	anr								
Cadmium	2000	2050	102.5	2000	2100	105.0	2000	2060	103.0
Calcium	anr								
Chromium	2000	2070	103.5	2000	2130	106.5	2000	2100	105.0
Cobalt	anr								
Copper	anr								
Iron	anr								
Lead	2000	2000	100.0	2000	2050	102.5	2000	2010	100.5
Magnesium	anr								
Manganese	anr								
Molybdenum									
Nickel	anr								
Potassium	anr								
Selenium	2000	2020	101.0	2000	2070	103.5	2000	2050	102.5
Silver	250	253	101.2	250	257	102.8	250	253	101.2
Sodium	anr								
Strontium									
Thallium	anr								
Tin									
Titanium									
Vanadium	anr								
Zinc	anr								

(*) Outside of QC limits
(anr) Analyte not requested

CALIBRATION CHECK STANDARDS SUMMARY
Initial and Continuing Calibration Checks

Login Number: F77899
Account: TETTNOAK - Tetra Tech, Inc
Project: Holloman AFB; Alamogordo, NM

File ID: SA111110M1.ICP Date Analyzed: 11/11/10 Methods: SW846 6010C
QC Limits: 90 to 110 % Recovery Run ID: MA8504 Units: ug/l

Time:		14:09			15:03			15:54	
Sample ID:	CCV	CCV6		CCV	CCV7		CCV	CCV8	
Metal	True	Results	% Rec	True	Results	% Rec	True	Results	% Rec
Aluminum	anr								
Antimony	anr								
Arsenic	2000	2080	104.0	2000	2140	107.0	2000	2110	105.5
Barium	2000	2050	102.5	2000	2150	107.5	2000	2110	105.5
Beryllium	anr								
Cadmium	2000	2070	103.5	2000	2100	105.0	2000	2080	104.0
Calcium	anr								
Chromium	2000	2130	106.5	2000	2140	107.0	2000	2170	108.5
Cobalt	anr								
Copper	anr								
Iron	anr								
Lead	2000	1980	99.0	2000	1980	99.0	2000	1960	98.0
Magnesium	anr								
Manganese	anr								
Molybdenum									
Nickel	anr								
Potassium	anr								
Selenium	2000	2100	105.0	2000	2190	109.5	2000	2150	107.5
Silver	250	249	99.6	250	254	101.6	250	254	101.6
Sodium	anr								
Strontium									
Thallium	anr								
Tin									
Titanium									
Vanadium	anr								
Zinc	anr								

(*) Outside of QC limits
(anr) Analyte not requested

CALIBRATION CHECK STANDARDS SUMMARY
Initial and Continuing Calibration Checks

Login Number: F77899
Account: TETTNOAK - Tetra Tech, Inc
Project: Holloman AFB; Alamogordo, NM

File ID: SA111110M1.ICP Date Analyzed: 11/11/10 Methods: SW846 6010C
QC Limits: 90 to 110 % Recovery Run ID: MA8504 Units: ug/l

Time:		16:44			17:07			17:58	
Sample ID:	CCV	CCV9		CCV	CCV10		CCV	CCV11	
Metal	True	Results	% Rec	True	Results	% Rec	True	Results	% Rec
Aluminum	anr								
Antimony	anr								
Arsenic	2000	2120	106.0	2000	1950	97.5	2000	1950	97.5
Barium	2000	2110	105.5	2000	2020	101.0	2000	2000	100.0
Beryllium	anr								
Cadmium	2000	2070	103.5	2000	2020	101.0	2000	2020	101.0
Calcium	anr								
Chromium	2000	2160	108.0	2000	2050	102.5	2000	2060	103.0
Cobalt	anr								
Copper	anr								
Iron	anr								
Lead	2000	1950	97.5	2000	2000	100.0	2000	1990	99.5
Magnesium	anr								
Manganese	anr								
Molybdenum									
Nickel	anr								
Potassium	anr								
Selenium	2000	2170	108.5	2000	1980	99.0	2000	1980	99.0
Silver	250	253	101.2	250	244	97.6	250	243	97.2
Sodium	anr								
Strontium									
Thallium	anr								
Tin									
Titanium									
Vanadium	anr								
Zinc	anr								

(*) Outside of QC limits
(anr) Analyte not requested

CALIBRATION CHECK STANDARDS SUMMARY
Initial and Continuing Calibration Checks

Login Number: F77899
Account: TETTNOAK - Tetra Tech, Inc
Project: Holloman AFB; Alamogordo, NM

File ID: SA111110M1.ICP Date Analyzed: 11/11/10 Methods: SW846 6010C
QC Limits: 90 to 110 % Recovery Run ID: MA8504 Units: ug/l

Time:		18:46			19:35			20:25	
Sample ID:	CCV	CCV12		CCV	CCV13		CCV	CCV14	
Metal	True	Results	% Rec	True	Results	% Rec	True	Results	% Rec
Aluminum	anr								
Antimony	anr								
Arsenic	2000	1940	97.0	2000	2010	100.5	2000	2040	102.0
Barium	2000	1980	99.0	2000	2080	104.0	2000	2090	104.5
Beryllium	anr								
Cadmium	2000	2010	100.5	2000	2040	102.0	2000	2010	100.5
Calcium	anr								
Chromium	2000	2020	101.0	2000	2100	105.0	2000	2040	102.0
Cobalt	anr								
Copper	anr								
Iron	anr								
Lead	2000	2000	100.0	2000	2010	100.5	2000	1960	98.0
Magnesium	anr								
Manganese	anr								
Molybdenum									
Nickel	anr								
Potassium	anr								
Selenium	2000	1960	98.0	2000	2050	102.5	2000	2090	104.5
Silver	250	243	97.2	250	253	101.2	250	254	101.6
Sodium	anr								
Strontium									
Thallium	anr								
Tin									
Titanium									
Vanadium	anr								
Zinc	anr								

(*) Outside of QC limits
(anr) Analyte not requested

CALIBRATION CHECK STANDARDS SUMMARY
Initial and Continuing Calibration Checks

Login Number: F77899
Account: TETTNOAK - Tetra Tech, Inc
Project: Holloman AFB; Alamogordo, NM

File ID: SA111110M1.ICP Date Analyzed: 11/11/10 Methods: SW846 6010C
QC Limits: 90 to 110 % Recovery Run ID: MA8504 Units: ug/l

Time:		21:14			22:03			22:52	
Sample ID:	CCV	CCV15		CCV	CCV16		CCV	CCV17	
Metal	True	Results	% Rec	True	Results	% Rec	True	Results	% Rec
Aluminum	anr								
Antimony	anr								
Arsenic	2000	2020	101.0	2000	2000	100.0	2000	1960	98.0
Barium	2000	2100	105.0	2000	2070	103.5	2000	2070	103.5
Beryllium	anr								
Cadmium	2000	1990	99.5	2000	1980	99.0	2000	1950	97.5
Calcium	anr								
Chromium	2000	2030	101.5	2000	2010	100.5	2000	2020	101.0
Cobalt	anr								
Copper	anr								
Iron	anr								
Lead	2000	1950	97.5	2000	1940	97.0	2000	1950	97.5
Magnesium	anr								
Manganese	anr								
Molybdenum									
Nickel	anr								
Potassium	anr								
Selenium	2000	2080	104.0	2000	2050	102.5	2000	2010	100.5
Silver	250	253	101.2	250	250	100.0	250	256	102.4
Sodium	anr								
Strontium									
Thallium	anr								
Tin									
Titanium									
Vanadium	anr								
Zinc	anr								

(*) Outside of QC limits
(anr) Analyte not requested

CALIBRATION CHECK STANDARDS SUMMARY
Initial and Continuing Calibration Checks

Login Number: F77899
Account: TETTNOAK - Tetra Tech, Inc
Project: Holloman AFB; Alamogordo, NM

File ID: SA111110M1.ICP Date Analyzed: 11/11/10 Methods: SW846 6010C
QC Limits: 90 to 110 % Recovery Run ID: MA8504 Units: ug/l

Time:		23:29	
Sample ID:	CCV	CCV18	
Metal	True	Results	% Rec
Aluminum	anr		
Antimony	anr		
Arsenic	2000	2010	100.5
Barium	2000	2090	104.5
Beryllium	anr		
Cadmium	2000	1980	99.0
Calcium	anr		
Chromium	2000	2000	100.0
Cobalt	anr		
Copper	anr		
Iron	anr		
Lead	2000	1960	98.0
Magnesium	anr		
Manganese	anr		
Molybdenum			
Nickel	anr		
Potassium	anr		
Selenium	2000	2060	103.0
Silver	250	254	101.6
Sodium	anr		
Strontium			
Thallium	anr		
Tin			
Titanium			
Vanadium	anr		
Zinc	anr		

(*) Outside of QC limits
(anr) Analyte not requested

HIGH STANDARD CHECK SUMMARY

Login Number: F77899
Account: TETTNOAK - Tetra Tech, Inc
Project: Holloman AFB; Alamogordo, NM

File ID: SA111110M1.ICP Date Analyzed: 11/11/10 Methods: SW846 6010C
QC Limits: 95 to 105 % Recovery Run ID: MA8504 Units: ug/l

Time:		08:30	
Sample ID:	HSTD	HSTD1	
Metal	True	Results	% Rec
Aluminum	anr		
Antimony	anr		
Arsenic	4000	4040	101.0
Barium	4000	3980	99.5
Beryllium	anr		
Cadmium	4000	4010	100.3
Calcium	anr		
Chromium	4000	3980	99.5
Cobalt	anr		
Copper	anr		
Iron	anr		
Lead	4000	4030	100.8
Magnesium	anr		
Manganese	anr		
Molybdenum			
Nickel	anr		
Potassium	anr		
Selenium	4000	4040	101.0
Silver	500	499	99.8
Sodium	anr		
Strontium			
Thallium	anr		
Tin			
Titanium			
Vanadium	anr		
Zinc	anr		

(*) Outside of QC limits
(anr) Analyte not requested

LOW CALIBRATION CHECK STANDARDS SUMMARY

Login Number: F77899
Account: TETTNOAK - Tetra Tech, Inc
Project: Holloman AFB; Alamogordo, NM

File ID: SA111110M1.ICP Date Analyzed: 11/11/10 Methods: SW846 6010C
QC Limits: CRI 70-130% CRIA 70-130% Run ID: MA8504 Units: ug/l

Time:			08:44		08:48		23:17	
Sample ID:	CRI	CRIA	CRIA1		CRIA2		CRIA3	
Metal	True	True	Results	% Rec	Results	% Rec	Results	% Rec
Aluminum	400	200	anr					
Antimony	10	5.0	anr					
Arsenic	20	10	8.8	88.0			10.1	101.0
Barium	400	200	205	102.5			207	103.5
Beryllium	10	5.0	anr					
Cadmium	10	5.0	5.1	102.0			4.8	96.0
Calcium	2000	1000	anr					
Chromium	20	10	10.0	100.0			10.5	105.0
Cobalt	100	50	anr					
Copper	50	25	anr					
Iron	600	300	anr					
Lead	10	5.0	4.6	92.0			3.8	76.0
Magnesium	10000	5000	anr					
Manganese	30	15	anr					
Molybdenum	100	50						
Nickel	80	40	anr					
Potassium	20000	10000	anr					
Selenium	20	10			9.2	92.0	10.9	109.0
Silver	20	10	8.7	87.0			8.8	88.0
Sodium	20000	10000	anr					
Strontium	20	10						
Thallium	20	10	anr					
Tin	100	50						
Titanium	20	10						
Vanadium	100	50	anr					
Zinc	40	20	anr					

(*) Outside of QC limits
(anr) Analyte not requested

INTERFERING ELEMENT CHECK STANDARDS SUMMARY
Part 1 - ICSA and ICSAB Standards

Login Number: F77899
Account: TETTNOAK - Tetra Tech, Inc
Project: Holloman AFB; Alamogordo, NM

File ID: SA111110M1.ICP Date Analyzed: 11/11/10 Methods: SW846 6010C
QC Limits: 80 to 120 % Recovery Run ID: MA8504 Units: ug/l

Time:			08:56		09:02		23:21		23:25	
Sample ID:	ICSA	ICSAB	ICSA1		ICSAB1		ICSA2		ICSAB2	
Metal	True	True	Results	% Rec	Results	% Rec	Results	% Rec	Results	% Rec
Aluminum	500000	500000	523000	104.6	517000	103.4	493000	98.6	489000	97.8
Antimony		1000	0.0		1060	106.0	0.0		1060	106.0
Arsenic		1000	-0.40		1050	105.0	-1.4		1040	104.0
Barium		500	4.5		534	106.8	-1.3		524	104.8
Beryllium		500	-0.20		509	101.8	-0.10		479	95.8
Cadmium		1000	0.0		983	98.3	4.7		942	94.2
Calcium	500000	500000	472000	94.4	481000	96.2	433000	86.6	437000	87.4
Chromium		500	-0.90		435	87.0	-0.70		424	84.8
Cobalt		500	0.20		499	99.8	0.50		469	93.8
Copper		500	0.0		530	106.0	1.3		556	111.2
Iron	200000	200000	191000	95.5	191000	95.5	179000	89.5	179000	89.5
Lead		1000	0.40		1020	102.0	8.0		976	97.6
Magnesium	500000	500000	525000	105.0	537000	107.4	487000	97.4	495000	99.0
Manganese		500	0.10		442	88.4	0.40		446	89.2
Molybdenum		1000	0.30		1000	100.0	0.20		964	96.4
Nickel		1000	0.0		997	99.7	1.5		954	95.4
Potassium			-6.8		-9.0		-10		-29	
Selenium		1000	0.0		1040	104.0	0.20		1030	103.0
Silver		1000	0.40		1120	112.0	0.20		1150	115.0
Sodium			349		-530		-550		-1000	
Strontium		1000	-6.0		-6.1	0.0*	-5.0		-5.0	0.0*
Thallium		1000	0.0		985	98.5	-2.4		956	95.6
Tin		1000	2.7		956	95.6	2.5		915	91.5
Titanium		1000	5.0		5.1	0.5*	4.3		5.0	0.5*
Vanadium		500	-0.20		452	90.4	-0.10		455	91.0
Zinc		1000	-4.9		921	92.1	-4.8		854	85.4

(*) Outside of QC limits
(anr) Analyte not requested

Accutest Laboratories Instrument Runlog
Inorganics Analyses

Login Number: F77899
Account: TETTNOAK - Tetra Tech, Inc
Project: Holloman AFB; Alamogordo, NM

File ID: SA111210M1.ICP Date Analyzed: 11/12/10 Methods: SW846 6010C
Analyst: RS Run ID: MA8509
Parameters: Cr,Se

Time	Sample Description	Dilution Factor	PS Recov	Comments
09:40	MA8509-STD1	1		STDA
09:44	MA8509-STD2	1		STDB
09:47	MA8509-STD3	1		STDC
09:53	MA8509-HSTD1	1		
09:57	MA8509-ICV1	1		
10:04	MA8509-ICB1	1		
10:09	MA8509-CRIA1	1		
10:18	MA8509-ICSA1	1		
10:24	MA8509-ICSAB1	1		
10:34	MA8509-CCV1	1		
10:44	MA8509-CCB1	1		
11:12	MP19452-D1	1		
11:16	F77889-38	5		(sample used for QC only; not part of login F77899)
11:20	MP19463-D1	5		
11:24	MP19463-S1	5		
11:28	MP19463-S2	5		
11:32	MP19463-PS1	5		
11:37	MP19463-SD1	25		
11:41	ZZZZZZ	5		
11:45	F77899-17	10		
11:49	MA8509-CCV2	1		
11:53	MA8509-CCB2	1		
11:57	F77899-18	10		
12:01	F77899-19	10		
12:06	F77899-20	10		
---------->	Last reportable sample/prep for job F77899			
12:18	ZZZZZZ	5		
12:22	MP19467-MB1	1		
12:26	MP19467-B1	1		
12:34	MP19467-D1	1		
12:38	MP19467-SD1	5		
12:43	MP19467-PS1	1		
12:47	MA8509-CCV3	1		
12:51	MA8509-CCB3	1		

Accutest Laboratories Instrument Runlog
Inorganics Analyses

Login Number: F77899
Account: TETTNOAK - Tetra Tech, Inc
Project: Holloman AFB; Alamogordo, NM

File ID: SA111210M1.ICP Date Analyzed: 11/12/10 Methods: SW846 6010C
Analyst: RS Run ID: MA8509
Parameters: Cr,Se

Time	Sample Description	Dilution Factor	PS Recov	Comments
12:55	MP19467-S1	1		
12:59	MP19467-S2	1		
13:07	ZZZZZZ	1		
13:15	ZZZZZZ	1		
13:28	ZZZZZZ	1		
13:36	MA8509-CCV4	1		
13:40	MA8509-CCB4	1		
13:44	ZZZZZZ	1		
14:05	ZZZZZZ	1		
14:18	ZZZZZZ	1		
14:21	ZZZZZZ	1		
14:26	MA8509-CCV5	1		
14:29	MA8509-CCB5	1		
14:34	ZZZZZZ	1		
14:38	MP19466-MB1	1		
14:42	MP19466-B1	1		
14:46	F77964-10	1		(sample used for QC only; not part of login F77899)
14:50	MP19466-D1	1		
14:54	MP19466-SD1	5		
14:58	MP19466-PS1	1		
15:02	MP19466-S1	1		
15:06	MP19466-S2	1		
15:10	ZZZZZZ	1		
15:14	MA8509-CCV6	1		
15:18	MA8509-CCB6	1		
15:22	ZZZZZZ	1		
15:27	ZZZZZZ	1		
15:30	ZZZZZZ	1		
15:35	ZZZZZZ	1		
15:39	ZZZZZZ	1		
15:43	ZZZZZZ	1		
15:47	ZZZZZZ	1		
15:51	ZZZZZZ	1		

Accutest Laboratories Instrument Runlog
Inorganics Analyses

Login Number: F77899
Account: TETTNOAK - Tetra Tech, Inc
Project: Holloman AFB; Alamogordo, NM

File ID: SA111210M1.ICP Date Analyzed: 11/12/10 Methods: SW846 6010C
Analyst: RS Run ID: MA8509
Parameters: Cr,Se

Time	Sample Description	Dilution Factor	PS Recov	Comments
15:55	ZZZZZZ	1		
15:59	ZZZZZZ	1		
16:03	MA8509-CCV7	1		
16:07	MA8509-CCB7	1		
16:23	MA8509-CCV8	1		
16:31	MA8509-CCB8	1		
16:34	ZZZZZZ	1		
16:38	ZZZZZZ	1		
16:43	ZZZZZZ	1		
16:46	ZZZZZZ	1		
16:51	ZZZZZZ	1		
16:55	ZZZZZZ	1		
16:59	ZZZZZZ	1		
17:03	ZZZZZZ	1		
17:07	MP19471-MB1	1		
17:11	MP19471-B1	1		
17:15	MA8509-CCV9	1		
17:19	MA8509-CCB9	1		
17:23	F75925-4T	1		(sample used for QC only; not part of login F77899)
17:27	MP19471-D1	1		
17:31	MP19471-SD1	5		
17:35	MP19471-PS1	1		
17:40	MP19471-S1	1		
17:44	MP19471-S2	1		
17:48	ZZZZZZ	1		
17:52	ZZZZZZ	1		
17:56	ZZZZZZ	1		
18:00	ZZZZZZ	1		
18:04	MA8509-CCV10	1		
18:08	MA8509-CCB10	1		
18:12	ZZZZZZ	1		
18:16	ZZZZZZ	1		
18:20	ZZZZZZ	1		

Accutest Laboratories Instrument Runlog
Inorganics Analyses

Login Number: F77899
Account: TETTNOAK - Tetra Tech, Inc
Project: Holloman AFB; Alamogordo, NM

File ID: SA111210M1.ICP Date Analyzed: 11/12/10 Methods: SW846 6010C
Analyst: RS Run ID: MA8509
Parameters: Cr,Se

Time	Sample Description	Dilution Factor	PS Recov	Comments
18:24	ZZZZZZ	1		
18:37	ZZZZZZ	1		
18:49	ZZZZZZ	1		
18:53	MA8509-CCV11	1		
18:57	MA8509-CCB11	1		
19:01	ZZZZZZ	1		
19:06	ZZZZZZ	1		
19:10	ZZZZZZ	1		
19:18	MP19475-MB1	1		
19:22	MP19475-B1	1		
19:26	F77972-1	1		(sample used for QC only; not part of login F77899)
19:30	MP19475-D1	1		
19:34	MP19475-SD1	5		
19:38	MP19475-PS1	1		
19:42	MA8509-CCV12	1		
19:46	MA8509-CCB12	1		
19:50	MP19475-S1	1		
19:54	MP19475-S2	1		
19:58	ZZZZZZ	1		
20:02	ZZZZZZ	1		
20:06	ZZZZZZ	1		
20:11	ZZZZZZ	1		
20:15	ZZZZZZ	1		
20:19	ZZZZZZ	1		
20:23	ZZZZZZ	1		
20:27	ZZZZZZ	1		
20:31	MA8509-CCV13	1		
20:35	MA8509-CCB13	1		
20:39	ZZZZZZ	1		
20:44	ZZZZZZ	1		
20:48	ZZZZZZ	1		
20:52	ZZZZZZ	1		
20:56	ZZZZZZ	1		

Accutest Laboratories Instrument Runlog
Inorganics Analyses

Login Number: F77899
Account: TETTNOAK - Tetra Tech, Inc
Project: Holloman AFB; Alamogordo, NM

File ID: SA111210M1.ICP Date Analyzed: 11/12/10 Methods: SW846 6010C
Analyst: RS Run ID: MA8509
Parameters: Cr,Se

Time	Sample Description	Dilution Factor	PS Recov	Comments
21:00	ZZZZZZ	1		
21:05	ZZZZZZ	1		
21:09	ZZZZZZ	1		
21:13	ZZZZZZ	1		
21:18	MP19474-MB1	1		
21:22	MA8509-CCV14	1		
21:26	MA8509-CCB14	1		
21:30	MP19474-B1	1		
21:34	F77771-1A	1		(sample used for QC only; not part of login F77899)
21:38	MP19474-D1	1		
21:42	MP19474-SD1	5		
21:46	MP19474-S1	1		
21:50	MP19474-S2	1		
21:54	ZZZZZZ	1		
21:58	ZZZZZZ	1		
22:02	ZZZZZZ	1		
22:06	ZZZZZZ	1		
22:11	MA8509-CCV15	1		
22:15	MA8509-CCB15	1		
22:19	F77897-41	1		(sample used for QC only; not part of login F77899)
22:23	ZZZZZZ	1		
22:27	MP19474-D2	1		
22:31	MP19474-MB2	1		
22:35	MP19474-B2	1		
22:39	MP19474-MB3	1		
22:43	MP19474-B3	1		
22:47	MP19476-MB1	1		
22:52	MP19476-B1	1		
22:55	F78004-2	1		(sample used for QC only; not part of login F77899)
23:00	MA8509-CCV16	1		
23:04	MA8509-CCB16	1		
23:08	MP19476-D1	1		
23:12	MP19476-SD1	5		

Accutest Laboratories Instrument Runlog
Inorganics Analyses

Login Number: F77899
Account: TETTNOAK - Tetra Tech, Inc
Project: Holloman AFB; Alamogordo, NM

File ID: SA111210M1.ICP Date Analyzed: 11/12/10 Methods: SW846 6010C
Analyst: RS Run ID: MA8509
Parameters: Cr,Se

Time	Sample Description	Dilution Factor	PS Recov	Comments
23:16	MP19476-PS1	1		
23:20	MP19476-S1	1		
23:24	MP19476-S2	1		
23:28	ZZZZZZ	1		
23:32	ZZZZZZ	1		
23:36	ZZZZZZ	1		
23:40	ZZZZZZ	1		
23:44	ZZZZZZ	1		
23:49	MA8509-CCV17	1		
23:52	MA8509-CCB17	1		
23:57	MA8509-CRIA2	1		
00:01	MA8509-ICSA2	1		
00:05	MA8509-ICSAB2	1		
00:09	MA8509-CCV18	1		
00:13	MA8509-CCB18	1		

----------> Last reportable CCB for job F77899
Refer to raw data for calibration curve and standards.

INTERNAL STANDARD SUMMARY

Login Number: F77899
Account: TETTNOAK - Tetra Tech, Inc
Project: Holloman AFB; Alamogordo, NM

File ID: SA111210M1.ICP Date Analyzed: 11/12/10 Methods: SW846 6010C
Analyst: RS Run ID: MA8509
Parameters: Cr,Se

Time	Sample Description	Istd#1	Istd#2	Istd#3	Istd#4	Istd#5
09:40	MA8509-STD1	1063	1770	31176	10516	1363
09:44	MA8509-STD2	984	1773	29303	10252	1141
09:47	MA8509-STD3	937	1772	28525	10228	1050
09:53	MA8509-HSTD1	943	1796	28591	10068	1057
09:57	MA8509-ICV1	986	1757	29318	10306	1139
10:04	MA8509-ICB1	1057 R	1799 R	30845 R	10416 R	1367 R
10:09	MA8509-CRIA1	1042	1774	30281	10338	1305
10:18	MA8509-ICSA1	893	1788	26384	9907	945
10:24	MA8509-ICSAB1	903	1793	26578	9859	942
10:34	MA8509-CCV1	988	1770	29398	10258	1136
10:44	MA8509-CCB1	1064	1794	30917	10418	1363
11:12	MP19452-D1	913	1554	27302	10130	1058
11:16	F77889-38	994	1671	29308	10281	1193
11:20	MP19463-D1	993	1695	29389	10212	1205
11:24	MP19463-S1	990	1707	29531	10311	1186
11:28	MP19463-S2	977	1701	29470	10398	1175
11:32	MP19463-PS1	972	1687	29311	10244	1189
11:37	MP19463-SD1	1020	1755	30419	10308	1306
11:41	ZZZZZZ	1008	1709	29957	10431	1249
11:45	F77899-17	924	1595	28066	10119	1087
11:49	MA8509-CCV2	966	1757	29262	10235	1136
11:53	MA8509-CCB2	1033	1790	30863	10343	1365
11:57	F77899-18	933	1615	28181	10123	1095
12:01	F77899-19	924	1594	27997	10165	1079
12:06	F77899-20	934	1633	28104	10109	1108
12:18	ZZZZZZ	1151	2184	34995	12182	1203
12:22	MP19467-MB1	1004	1707	30196	10297	1337
12:26	MP19467-B1	963	1717	28882	10020	1185
12:34	MP19467-D1	828	1465	25623	10146	739 !
12:38	MP19467-SD1	896	1580	27685	10161	990
12:43	MP19467-PS1	843	1490	26133	10432	735 !
12:47	MA8509-CCV3	964	1791	29839	10253	1157
12:51	MA8509-CCB3	1015	1790	31066	10384	1373

INTERNAL STANDARD SUMMARY

Login Number: F77899
Account: TETTNOAK - Tetra Tech, Inc
Project: Holloman AFB; Alamogordo, NM

File ID: SA111210M1.ICP Date Analyzed: 11/12/10 Methods: SW846 6010C
Analyst: RS Run ID: MA8509
Parameters: Cr,Se

Time	Sample Description	Istd#1	Istd#2	Istd#3	Istd#4	Istd#5
12:55	MP19467-S1	756	1363	23802	9704	654 !
12:59	MP19467-S2	862	1549	26950	10648	758 !
13:07	ZZZZZZ	1179	2210	35936	12426	1164
13:15	ZZZZZZ	881	2132	28311	10178	1156
13:28	ZZZZZZ	902	1730	28617	11230	727 !
13:36	MA8509-CCV4	932	1761	29707	10471	1152
13:40	MA8509-CCB4	990	1785	31043	10465	1369
13:44	ZZZZZZ	1277	2890 !	42159 !	15162 !	912
14:05	ZZZZZZ	1095	2222	34610	13275 !	793 !
14:18	ZZZZZZ	1220	2737 !	38930 !	14159 !	1034
14:21	ZZZZZZ	1109	2238	35544	13732 !	831
14:26	MA8509-CCV5	929	1782	29695	10358	1157
14:29	MA8509-CCB5	992	1773	30893	10427	1376
14:34	ZZZZZZ	1384 !	2910 !	44452 !	16965 !	832
14:38	MP19466-MB1	952	1692	30364	10369	1328
14:42	MP19466-B1	921	1680	28980	10146	1182
14:46	F77964-10	1190	2564 !	37987	13414 !	1108
14:50	MP19466-D1	1167	2446 !	37021	13004	1120
14:54	MP19466-SD1	1028	1971	32759	11230	1259
14:58	MP19466-PS1	1173	2485 !	37593	13486 !	1092
15:02	MP19466-S1	1227	2673 !	39396 !	14305 !	1035
15:06	MP19466-S2	1228	2648 !	39106 !	14148 !	1047
15:10	ZZZZZZ	1344 !	2797 !	43362 !	15349 !	1078
15:14	MA8509-CCV6	937	1735	30145	10581	1157
15:18	MA8509-CCB6	986	1751	31272	10626	1372
15:22	ZZZZZZ	1303	2662 !	41225 !	14612 !	1104
15:27	ZZZZZZ	1266	2588 !	40332 !	14172 !	1130
15:30	ZZZZZZ	1381 !	2944 !	44622 !	15998 !	1069
15:35	ZZZZZZ	1188	2698 !	38370	13857 !	1076
15:39	ZZZZZZ	1268	2710 !	41026 !	14575 !	1109
15:43	ZZZZZZ	1276	2905 !	41645 !	14959 !	1080
15:47	ZZZZZZ	1287	2761 !	42168 !	15134 !	1108
15:51	ZZZZZZ	1340 !	2874 !	44366 !	16115 !	1090

INTERNAL STANDARD SUMMARY

Login Number: F77899
Account: TETTNOAK - Tetra Tech, Inc
Project: Holloman AFB; Alamogordo, NM

File ID: SA111210M1.ICP Date Analyzed: 11/12/10 Methods: SW846 6010C
Analyst: RS Run ID: MA8509
Parameters: Cr,Se

Time	Sample Description	Istd#1	Istd#2	Istd#3	Istd#4	Istd#5
15:55	ZZZZZZ	1280	2791 !	42678 !	15302 !	1098
15:59	ZZZZZZ	1262	2771 !	42040 !	15026 !	1115
16:03	MA8509-CCV7	894	1740	30120	10690	1156
16:07	MA8509-CCB7	943	1722	31075	10750	1377
16:23	MA8509-CCV8	882	1703	29280	10527	1140
16:31	MA8509-CCB8	959	1731	31035	10624	1378
16:34	ZZZZZZ	944	1672	30392	10384	1326
16:38	ZZZZZZ	931	1684	30311	10454	1330
16:43	ZZZZZZ	808	1596	28757	10218	1200
16:46	ZZZZZZ	950	1696	30645	10551	1344
16:51	ZZZZZZ	952	1704	30879	10504	1347
16:55	ZZZZZZ	944	1710	31038	10659	1355
16:59	ZZZZZZ	1034	1941	33466	11748	1245
17:03	ZZZZZZ	975	1774	31209	10982	1214
17:07	MP19471-MB1	961	1695	31238	10648	1371
17:11	MP19471-B1	900	1677	29327	10489	1200
17:15	MA8509-CCV9	897	1765	29879	10620	1169
17:19	MA8509-CCB9	969	1742	31198	10722	1401
17:23	F75925-4T	2384 !	4772 !	81587 !	29318 !	1120
17:27	MP19471-D1	2486 !	5080 !	86409 !	31814 !	1103
17:31	MP19471-SD1	1224	2370 !	41095 !	14661 !	1286
17:35	MP19471-PS1	2292 !	4643 !	78863 !	29111 !	1103
17:40	MP19471-S1	1348 !	2949 !	45984 !	16851 !	1097
17:44	MP19471-S2	1424 !	2994 !	48781 !	17879 !	1108
17:48	ZZZZZZ	1398 !	2954 !	47142 !	17672 !	1017
17:52	ZZZZZZ	1198	2553 !	40366 !	15733 !	855
17:56	ZZZZZZ	1347 !	2799 !	44892 !	17332 !	899
18:00	ZZZZZZ	667	1226	21975	9228	667 !
18:04	MA8509-CCV10	915	1724	29995	10740	1165
18:08	MA8509-CCB10	960	1730	31242	10916	1392
18:12	ZZZZZZ	1383 !	2928 !	46046 !	17693 !	911
18:16	ZZZZZZ	2306 !	4701 !	77210 !	28763 !	965
18:20	ZZZZZZ	1192	2613 !	39485 !	14797 !	994

INTERNAL STANDARD SUMMARY

Login Number: F77899
Account: TETTNOAK - Tetra Tech, Inc
Project: Holloman AFB; Alamogordo, NM

File ID: SA111210M1.ICP Date Analyzed: 11/12/10 Methods: SW846 6010C
Analyst: RS Run ID: MA8509
Parameters: Cr,Se

Time	Sample Description	Istd#1	Istd#2	Istd#3	Istd#4	Istd#5
18:24	ZZZZZZ	1839 !	3755 !	61928 !	23660 !	920
18:37	ZZZZZZ	1317	2659 !	44108 !	16941 !	971
18:49	ZZZZZZ	1420 !	2920 !	47602 !	18769 !	894
18:53	MA8509-CCV11	859	1603	28616	10940	1113
18:57	MA8509-CCB11	930	1640	30228	11103	1369
19:01	ZZZZZZ	1653 !	3106 !	54552 !	21640 !	842
19:06	ZZZZZZ	1507 !	2978 !	50087 !	19173 !	995
19:10	ZZZZZZ	1264	2668 !	42647 !	16596 !	980
19:18	MP19475-MB1	882	1592	30030	11105	1344
19:22	MP19475-B1	837	1537	28212	10877	1144
19:26	F77972-1	859	1556	29178	11112	1180
19:30	MP19475-D1	851	1542	28729	11013	1173
19:34	MP19475-SD1	869	1561	29162	10953	1279
19:38	MP19475-PS1	842	1513	28130	10908	1135
19:42	MA8509-CCV12	819	1525	27678	10649	1081
19:46	MA8509-CCB12	878	1542	29286	10955	1322
19:50	MP19475-S1	832	1500	27787	10698	1072
19:54	MP19475-S2	831	1522	27856	10784	1077
19:58	ZZZZZZ	859	1532	28651	11061	1141
20:02	ZZZZZZ	767	1298	25109	10446	1048
20:06	ZZZZZZ	856	1497	28809	10730	1224
20:11	ZZZZZZ	811	1420	27596	10751	1158
20:15	ZZZZZZ	871	1545	29426	11057	1244
20:19	ZZZZZZ	850	1509	28852	10808	1254
20:23	ZZZZZZ	828	1468	28141	10755	1222
20:27	ZZZZZZ	842	1496	28527	10804	1240
20:31	MA8509-CCV13	812	1511	27547	10581	1081
20:35	MA8509-CCB13	870	1551	29328	10910	1320
20:39	ZZZZZZ	835	1489	28154	10708	1231
20:44	ZZZZZZ	829	1466	28132	10816	1215
20:48	ZZZZZZ	779	1379	26062	10455	1060
20:52	ZZZZZZ	735	1278	24105	10085	933
20:56	ZZZZZZ	525 !	931 !	17548 !	8367	576 !

INTERNAL STANDARD SUMMARY

Login Number: F77899
Account: TETTNOAK - Tetra Tech, Inc
Project: Holloman AFB; Alamogordo, NM

File ID: SA111210M1.ICP Date Analyzed: 11/12/10 Methods: SW846 6010C
Analyst: RS Run ID: MA8509
Parameters: Cr,Se

Time	Sample Description	Istd#1	Istd#2	Istd#3	Istd#4	Istd#5
21:00	ZZZZZZ	544 !	932 !	17686 !	8379	592 !
21:05	ZZZZZZ	604 !	1074 !	19948	8987	682 !
21:09	ZZZZZZ	625 !	1099	20222	8896	702 !
21:13	ZZZZZZ	901	1595	30297	11419	1152
21:18	MP19474-MB1	898	1584	29892	10885	1336
21:22	MA8509-CCV14	850	1578	28467	10698	1113
21:26	MA8509-CCB14	900	1622	30122	10880	1345
21:30	MP19474-B1	841	1557	27980	10555	1144
21:34	F77771-1A	822	1474	27130	10489	1126
21:38	MP19474-D1	804	1448	26461	10394	1085
21:42	MP19474-SD1	873	1554	28960	10733	1245
21:46	MP19474-S1	817	1481	26970	10464	1048
21:50	MP19474-S2	824	1496	27166	10448	1062
21:54	ZZZZZZ	800	1428	26529	10440	1063
21:58	ZZZZZZ	827	1493	27311	10653	1122
22:02	ZZZZZZ	827	1474	27371	10565	1130
22:06	ZZZZZZ	807	1449	26429	10444	1085
22:11	MA8509-CCV15	844	1606	28784	10683	1095
22:15	MA8509-CCB15	898	1607	29653	10873	1336
22:19	F77897-41	788	1421	26178	10407	1051
22:23	ZZZZZZ	826	1463	27193	10622	1122
22:27	MP19474-D2	803	1420	26526	10451	1065
22:31	MP19474-MB2	839	1502	27738	10688	1149
22:35	MP19474-B2	710	1397	25747	10273	942
22:39	MP19474-MB3	827	1465	27384	10628	1131
22:43	MP19474-B3	824	1513	27196	10642	1062
22:47	MP19476-MB1	910	1644	29964	10937	1366
22:52	MP19476-B1	872	1600	28537	10724	1168
22:55	F78004-2	898	1619	29621	10868	1333
23:00	MA8509-CCV16	844	1577	28144	10624	1100
23:04	MA8509-CCB16	917	1617	30135	10871	1346
23:08	MP19476-D1	901	1635	29813	10846	1340
23:12	MP19476-SD1	909	1602	29911	10825	1332

INTERNAL STANDARD SUMMARY

Login Number: F77899
Account: TETTNOAK - Tetra Tech, Inc
Project: Holloman AFB; Alamogordo, NM

File ID: SA111210M1.ICP Date Analyzed: 11/12/10 Methods: SW846 6010C
Analyst: RS Run ID: MA8509
Parameters: Cr,Se

Time	Sample Description	Istd#1	Istd#2	Istd#3	Istd#4	Istd#5
23:16	MP19476-PS1	891	1611	29117	10782	1256
23:20	MP19476-S1	867	1590	28629	10683	1159
23:24	MP19476-S2	863	1606	28534	10662	1160
23:28	ZZZZZZ	890	1620	29671	10897	1323
23:32	ZZZZZZ	888	1607	29463	10858	1324
23:36	ZZZZZZ	890	1609	29534	10870	1323
23:40	ZZZZZZ	897	1618	29749	10998	1321
23:44	ZZZZZZ	867	1649	29428	10970	1246
23:49	MA8509-CCV17	837	1590	28084	10521	1098
23:52	MA8509-CCB17	906	1629	30081	10854	1345
23:57	MA8509-CRIA2	886	1595	29302	10761	1272
00:01	MA8509-ICSA2	758	1601	25454	10035	901
00:05	MA8509-ICSAB2	754	1584	25217	9977	894
00:09	MA8509-CCV18	840	1592	28318	10567	1104
00:13	MA8509-CCB18	903	1640	29999	10744	1349

R = Reference for ISTD limits. ! = Outside limits.

LEGEND:

Istd#	Parameter	Limits
Istd#1	Yttrium (2243)	60-125 %
Istd#2	Yttrium (2422)	60-125 %
Istd#3	Yttrium (3242)	60-125 %
Istd#4	Yttrium (3710)	60-125 %
Istd#5	Indium	60-125 %

BLANK RESULTS SUMMARY
Part 1 - Initial and Continuing Calibration Blanks

Login Number: F77899
Account: TETTNOAK - Tetra Tech, Inc
Project: Holloman AFB; Alamogordo, NM

File ID: SA111210M1.ICP Date Analyzed: 11/12/10 Methods: SW846 6010C
QC Limits: result < RL Run ID: MA8509 Units: ug/l

Time:			10:04		10:44		11:53		12:51	
Sample ID:			ICB1		CCB1		CCB2		CCB3	
Metal	RL	IDL	raw	final	raw	final	raw	final	raw	final
Aluminum	200	20								
Antimony	6.0	1	anr							
Arsenic	10	1	anr							
Barium	200	1	anr							
Beryllium	4.0	.1	anr							
Cadmium	5.0	.1	anr							
Calcium	1000	50								
Chromium	10	1	-0.10	<10	0.10	<10	0.10	<10	0.20	<10
Cobalt	50	1								
Copper	25	1	anr							
Iron	300	34	anr							
Lead	5.0	1	anr							
Magnesium	5000	50								
Manganese	15	1	anr							
Molybdenum	50	1								
Nickel	40	1	anr							
Potassium	10000	50								
Selenium	10	2	-0.90	<10	-2.0	<10	-0.50	<10	-0.30	<10
Silver	10	1	anr							
Sodium	10000	750	anr							
Strontium	10	1								
Thallium	10	1	anr							
Tin	50	1								
Titanium	10	1.1								
Vanadium	50	1	anr							
Zinc	20	1	anr							

(*) Outside of QC limits
(anr) Analyte not requested

BLANK RESULTS SUMMARY
Part 1 - Initial and Continuing Calibration Blanks

Login Number: F77899
Account: TETTNOAK - Tetra Tech, Inc
Project: Holloman AFB; Alamogordo, NM

File ID: SA111210M1.ICP Date Analyzed: 11/12/10 Methods: SW846 6010C
QC Limits: result < RL Run ID: MA8509 Units: ug/l

Time:			13:40		14:29		15:18		16:07	
Sample ID:			CCB4		CCB5		CCB6		CCB7	
Metal	RL	IDL	raw	final	raw	final	raw	final	raw	final
Aluminum	200	20								
Antimony	6.0	1	anr							
Arsenic	10	1	anr							
Barium	200	1	anr							
Beryllium	4.0	.1	anr							
Cadmium	5.0	.1	anr							
Calcium	1000	50								
Chromium	10	1	0.0	<10	0.40	<10	0.0	<10	0.30	<10
Cobalt	50	1								
Copper	25	1	anr							
Iron	300	34	anr							
Lead	5.0	1	anr							
Magnesium	5000	50								
Manganese	15	1	anr							
Molybdenum	50	1								
Nickel	40	1	anr							
Potassium	10000	50								
Selenium	10	2	0.90	<10	0.70	<10	0.80	<10	2.0	<10
Silver	10	1	anr							
Sodium	10000	750	anr							
Strontium	10	1								
Thallium	10	1	anr							
Tin	50	1								
Titanium	10	1.1								
Vanadium	50	1	anr							
Zinc	20	1	anr							

(*) Outside of QC limits
(anr) Analyte not requested

BLANK RESULTS SUMMARY
Part 1 - Initial and Continuing Calibration Blanks

Login Number: F77899
Account: TETTNOAK - Tetra Tech, Inc
Project: Holloman AFB; Alamogordo, NM

File ID: SA111210M1.ICP Date Analyzed: 11/12/10 Methods: SW846 6010C
QC Limits: result < RL Run ID: MA8509 Units: ug/l

Time:			16:31		17:19		18:08		18:57	
Sample ID:			CCB8		CCB9		CCB10		CCB11	
Metal	RL	IDL	raw	final	raw	final	raw	final	raw	final
Aluminum	200	20								
Antimony	6.0	1	anr							
Arsenic	10	1	anr							
Barium	200	1	anr							
Beryllium	4.0	.1	anr							
Cadmium	5.0	.1	anr							
Calcium	1000	50								
Chromium	10	1	0.20	<10	-0.10	<10	0.30	<10	0.40	<10
Cobalt	50	1								
Copper	25	1	anr							
Iron	300	34	anr							
Lead	5.0	1	anr							
Magnesium	5000	50								
Manganese	15	1	anr							
Molybdenum	50	1								
Nickel	40	1	anr							
Potassium	10000	50								
Selenium	10	2	-1.8	<10	-1.8	<10	1.0	<10	-1.7	<10
Silver	10	1	anr							
Sodium	10000	750	anr							
Strontium	10	1								
Thallium	10	1	anr							
Tin	50	1								
Titanium	10	1.1								
Vanadium	50	1	anr							
Zinc	20	1	anr							

(*) Outside of QC limits
(anr) Analyte not requested

BLANK RESULTS SUMMARY
Part 1 - Initial and Continuing Calibration Blanks

Login Number: F77899
Account: TETTNOAK - Tetra Tech, Inc
Project: Holloman AFB; Alamogordo, NM

File ID: SA111210M1.ICP Date Analyzed: 11/12/10 Methods: SW846 6010C
QC Limits: result < RL Run ID: MA8509 Units: ug/l

Time:			19:46		20:35		21:26		22:15	
Sample ID:			CCB12		CCB13		CCB14		CCB15	
Metal	RL	IDL	raw	final	raw	final	raw	final	raw	final
Aluminum	200	20								
Antimony	6.0	1	anr							
Arsenic	10	1	anr							
Barium	200	1	anr							
Beryllium	4.0	.1	anr							
Cadmium	5.0	.1	anr							
Calcium	1000	50								
Chromium	10	1	0.50	<10	0.30	<10	0.20	<10	0.0	<10
Cobalt	50	1								
Copper	25	1	anr							
Iron	300	34	anr							
Lead	5.0	1	anr							
Magnesium	5000	50								
Manganese	15	1	anr							
Molybdenum	50	1								
Nickel	40	1	anr							
Potassium	10000	50								
Selenium	10	2	1.3	<10	0.80	<10	0.90	<10	0.20	<10
Silver	10	1	anr							
Sodium	10000	750	anr							
Strontium	10	1								
Thallium	10	1	anr							
Tin	50	1								
Titanium	10	1.1								
Vanadium	50	1	anr							
Zinc	20	1	anr							

(*) Outside of QC limits
(anr) Analyte not requested

BLANK RESULTS SUMMARY
Part 1 - Initial and Continuing Calibration Blanks

Login Number: F77899
Account: TETTNOAK - Tetra Tech, Inc
Project: Holloman AFB; Alamogordo, NM

File ID: SA111210M1.ICP Date Analyzed: 11/12/10 Methods: SW846 6010C
QC Limits: result < RL Run ID: MA8509 Units: ug/l

Time:			23:04		23:52		00:13	
Sample ID:			CCB16		CCB17		CCB18	
Metal	RL	IDL	raw	final	raw	final	raw	final
Aluminum	200	20						
Antimony	6.0	1	anr					
Arsenic	10	1	anr					
Barium	200	1	anr					
Beryllium	4.0	.1	anr					
Cadmium	5.0	.1	anr					
Calcium	1000	50						
Chromium	10	1	0.30	<10	0.20	<10	0.30	<10
Cobalt	50	1						
Copper	25	1	anr					
Iron	300	34	anr					
Lead	5.0	1	anr					
Magnesium	5000	50						
Manganese	15	1	anr					
Molybdenum	50	1						
Nickel	40	1	anr					
Potassium	10000	50						
Selenium	10	2	0.50	<10	-1.0	<10	2.0	<10
Silver	10	1	anr					
Sodium	10000	750	anr					
Strontium	10	1						
Thallium	10	1	anr					
Tin	50	1						
Titanium	10	1.1						
Vanadium	50	1	anr					
Zinc	20	1	anr					

(*) Outside of QC limits
(anr) Analyte not requested

CALIBRATION CHECK STANDARDS SUMMARY
Initial and Continuing Calibration Checks

Login Number: F77899
Account: TETTNOAK - Tetra Tech, Inc
Project: Holloman AFB; Alamogordo, NM

File ID: SA111210M1.ICP Date Analyzed: 11/12/10 Methods: SW846 6010C
QC Limits: 90 to 110 % Recovery Run ID: MA8509 Units: ug/l

Time:		09:57			10:34			11:49	
Sample ID:	ICV	ICV1		CCV	CCV1		CCV	CCV2	
Metal	True	Results	% Rec	True	Results	% Rec	True	Results	% Rec
Aluminum									
Antimony	anr								
Arsenic	anr								
Barium	anr								
Beryllium	anr								
Cadmium	anr								
Calcium									
Chromium	2000	2080	104.0	2000	2050	102.5	2000	2090	104.5
Cobalt									
Copper	anr								
Iron	anr								
Lead	anr								
Magnesium									
Manganese	anr								
Molybdenum									
Nickel	anr								
Potassium									
Selenium	2000	2020	101.0	2000	1970	98.5	2000	2010	100.5
Silver	anr								
Sodium	anr								
Strontium									
Thallium	anr								
Tin									
Titanium									
Vanadium	anr								
Zinc	anr								

(*) Outside of QC limits
(anr) Analyte not requested

CALIBRATION CHECK STANDARDS SUMMARY
Initial and Continuing Calibration Checks

Login Number: F77899
Account: TETTNOAK - Tetra Tech, Inc
Project: Holloman AFB; Alamogordo, NM

File ID: SA111210M1.ICP Date Analyzed: 11/12/10 Methods: SW846 6010C
QC Limits: 90 to 110 % Recovery Run ID: MA8509 Units: ug/l

Time:		12:47			13:36			14:26	
Sample ID:	CCV	CCV3		CCV	CCV4		CCV	CCV5	
Metal	True	Results	% Rec	True	Results	% Rec	True	Results	% Rec
Aluminum									
Antimony	anr								
Arsenic	anr								
Barium	anr								
Beryllium	anr								
Cadmium	anr								
Calcium									
Chromium	2000	2090	104.5	2000	2100	105.0	2000	2090	104.5
Cobalt									
Copper	anr								
Iron	anr								
Lead	anr								
Magnesium									
Manganese	anr								
Molybdenum									
Nickel	anr								
Potassium									
Selenium	2000	2020	101.0	2000	2100	105.0	2000	2110	105.5
Silver	anr								
Sodium	anr								
Strontium									
Thallium	anr								
Tin									
Titanium									
Vanadium	anr								
Zinc	anr								

(*) Outside of QC limits
(anr) Analyte not requested

CALIBRATION CHECK STANDARDS SUMMARY
Initial and Continuing Calibration Checks

Login Number: F77899
Account: TETTNOAK - Tetra Tech, Inc
Project: Holloman AFB; Alamogordo, NM

File ID: SA111210M1.ICP Date Analyzed: 11/12/10 Methods: SW846 6010C
QC Limits: 90 to 110 % Recovery Run ID: MA8509 Units: ug/l

Time:		15:14			16:03			16:23	
Sample ID:	CCV	CCV6		CCV	CCV7		CCV	CCV8	
Metal	True	Results	% Rec	True	Results	% Rec	True	Results	% Rec
Aluminum									
Antimony	anr								
Arsenic	anr								
Barium	anr								
Beryllium	anr								
Cadmium	anr								
Calcium									
Chromium	2000	2120	106.0	2000	2130	106.5	2000	2060	103.0
Cobalt									
Copper	anr								
Iron	anr								
Lead	anr								
Magnesium									
Manganese	anr								
Molybdenum									
Nickel	anr								
Potassium									
Selenium	2000	2100	105.0	2000	2230	111.5*(a	2000	2020	101.0
Silver	anr								
Sodium	anr								
Strontium									
Thallium	anr								
Tin									
Titanium									
Vanadium	anr								
Zinc	anr								

(*) Outside of QC limits
(anr) Analyte not requested
(a) No samples for Se reported in the area bracketed by this QC.

CALIBRATION CHECK STANDARDS SUMMARY
Initial and Continuing Calibration Checks

Login Number: F77899
Account: TETTNOAK - Tetra Tech, Inc
Project: Holloman AFB; Alamogordo, NM

File ID: SA111210M1.ICP Date Analyzed: 11/12/10 Methods: SW846 6010C
QC Limits: 90 to 110 % Recovery Run ID: MA8509 Units: ug/l

Time:		17:15			18:04			18:53	
Sample ID:	CCV	CCV9		CCV	CCV10		CCV	CCV11	
Metal	True	Results	% Rec	True	Results	% Rec	True	Results	% Rec
Aluminum									
Antimony	anr								
Arsenic	anr								
Barium	anr								
Beryllium	anr								
Cadmium	anr								
Calcium									
Chromium	2000	2060	103.0	2000	2060	103.0	2000	2040	102.0
Cobalt									
Copper	anr								
Iron	anr								
Lead	anr								
Magnesium									
Manganese	anr								
Molybdenum									
Nickel	anr								
Potassium									
Selenium	2000	2040	102.0	2000	1980	99.0	2000	2050	102.5
Silver	anr								
Sodium	anr								
Strontium									
Thallium	anr								
Tin									
Titanium									
Vanadium	anr								
Zinc	anr								

(*) Outside of QC limits
(anr) Analyte not requested

CALIBRATION CHECK STANDARDS SUMMARY
Initial and Continuing Calibration Checks

Login Number: F77899
Account: TETTNOAK - Tetra Tech, Inc
Project: Holloman AFB; Alamogordo, NM

File ID: SA111210M1.ICP Date Analyzed: 11/12/10 Methods: SW846 6010C
QC Limits: 90 to 110 % Recovery Run ID: MA8509 Units: ug/l

Time:		19:42			20:31			21:22	
Sample ID:	CCV	CCV12		CCV	CCV13		CCV	CCV14	
Metal	True	Results	% Rec	True	Results	% Rec	True	Results	% Rec
Aluminum									
Antimony	anr								
Arsenic	anr								
Barium	anr								
Beryllium	anr								
Cadmium	anr								
Calcium									
Chromium	2000	2050	102.5	2000	2070	103.5	2000	2060	103.0
Cobalt									
Copper	anr								
Iron	anr								
Lead	anr								
Magnesium									
Manganese	anr								
Molybdenum									
Nickel	anr								
Potassium									
Selenium	2000	2080	104.0	2000	2100	105.0	2000	2040	102.0
Silver	anr								
Sodium	anr								
Strontium									
Thallium	anr								
Tin									
Titanium									
Vanadium	anr								
Zinc	anr								

(*) Outside of QC limits
(anr) Analyte not requested

CALIBRATION CHECK STANDARDS SUMMARY
Initial and Continuing Calibration Checks

Login Number: F77899
Account: TETTNOAK - Tetra Tech, Inc
Project: Holloman AFB; Alamogordo, NM

File ID: SA111210M1.ICP Date Analyzed: 11/12/10 Methods: SW846 6010C
QC Limits: 90 to 110 % Recovery Run ID: MA8509 Units: ug/l

Time:		22:11			23:00			23:49	
Sample ID:	CCV	CCV15		CCV	CCV16		CCV	CCV17	
Metal	True	Results	% Rec	True	Results	% Rec	True	Results	% Rec
Aluminum									
Antimony	anr								
Arsenic	anr								
Barium	anr								
Beryllium	anr								
Cadmium	anr								
Calcium									
Chromium	2000	2010	100.5	2000	2060	103.0	2000	2060	103.0
Cobalt									
Copper	anr								
Iron	anr								
Lead	anr								
Magnesium									
Manganese	anr								
Molybdenum									
Nickel	anr								
Potassium									
Selenium	2000	2070	103.5	2000	2060	103.0	2000	2090	104.5
Silver	anr								
Sodium	anr								
Strontium									
Thallium	anr								
Tin									
Titanium									
Vanadium	anr								
Zinc	anr								

(*) Outside of QC limits
(anr) Analyte not requested

CALIBRATION CHECK STANDARDS SUMMARY
Initial and Continuing Calibration Checks

Login Number: F77899
Account: TETTNOAK - Tetra Tech, Inc
Project: Holloman AFB; Alamogordo, NM

File ID: SA111210M1.ICP Date Analyzed: 11/12/10 Methods: SW846 6010C
QC Limits: 90 to 110 % Recovery Run ID: MA8509 Units: ug/l

Time:		00:09	
Sample ID:	CCV	CCV18	
Metal	True	Results	% Rec
Aluminum			
Antimony	anr		
Arsenic	anr		
Barium	anr		
Beryllium	anr		
Cadmium	anr		
Calcium			
Chromium	2000	2070	103.5
Cobalt			
Copper	anr		
Iron	anr		
Lead	anr		
Magnesium			
Manganese	anr		
Molybdenum			
Nickel	anr		
Potassium			
Selenium	2000	2080	104.0
Silver	anr		
Sodium	anr		
Strontium			
Thallium	anr		
Tin			
Titanium			
Vanadium	anr		
Zinc	anr		

(*) Outside of QC limits
(anr) Analyte not requested

HIGH STANDARD CHECK SUMMARY

Login Number: F77899
Account: TETTNOAK - Tetra Tech, Inc
Project: Holloman AFB; Alamogordo, NM

File ID: SA111210M1.ICP Date Analyzed: 11/12/10 Methods: SW846 6010C
QC Limits: 95 to 105 % Recovery Run ID: MA8509 Units: ug/l

Time:		09:53	
Sample ID:	HSTD	HSTD1	
Metal	True	Results	% Rec
Aluminum			
Antimony	anr		
Arsenic	anr		
Barium	anr		
Beryllium	anr		
Cadmium	anr		
Calcium			
Chromium	4000	3900	97.5
Cobalt			
Copper	anr		
Iron	anr		
Lead	anr		
Magnesium			
Manganese	anr		
Molybdenum			
Nickel	anr		
Potassium			
Selenium	4000	4010	100.3
Silver	anr		
Sodium	anr		
Strontium			
Thallium	anr		
Tin			
Titanium			
Vanadium	anr		
Zinc	anr		

(*) Outside of QC limits
(anr) Analyte not requested

LOW CALIBRATION CHECK STANDARDS SUMMARY

Login Number: F77899
Account: TETTNOAK - Tetra Tech, Inc
Project: Holloman AFB; Alamogordo, NM

File ID: SA111210M1.ICP Date Analyzed: 11/12/10 Methods: SW846 6010C
QC Limits: CRI 70-130% CRIA 70-130% Run ID: MA8509 Units: ug/l

Time:			10:09		23:57	
Sample ID:	CRI	CRIA	CRIA1		CRIA2	
Metal	True	True	Results	% Rec	Results	% Rec
Aluminum	400	200				
Antimony	10	5.0	anr			
Arsenic	20	10	anr			
Barium	400	200	anr			
Beryllium	10	5.0	anr			
Cadmium	10	5.0	anr			
Calcium	2000	1000				
Chromium	20	10	11.0	110.0	11.1	111.0
Cobalt	100	50				
Copper	50	25	anr			
Iron	600	300	anr			
Lead	10	5.0	anr			
Magnesium	10000	5000				
Manganese	30	15	anr			
Molybdenum	100	50				
Nickel	80	40	anr			
Potassium	20000	10000				
Selenium	20	10	9.1	91.0	9.3	93.0
Silver	20	10	anr			
Sodium	20000	10000	anr			
Strontium	20	10				
Thallium	20	10	anr			
Tin	100	50				
Titanium	20	10				
Vanadium	100	50	anr			
Zinc	40	20	anr			

(*) Outside of QC limits
(anr) Analyte not requested

INTERFERING ELEMENT CHECK STANDARDS SUMMARY
Part 1 - ICSA and ICSAB Standards

Login Number: F77899
Account: TETTNOAK - Tetra Tech, Inc
Project: Holloman AFB; Alamogordo, NM

File ID: SA111210M1.ICP Date Analyzed: 11/12/10 Methods: SW846 6010C
QC Limits: 80 to 120 % Recovery Run ID: MA8509 Units: ug/l

Time:			10:18		10:24		00:01		00:05	
Sample ID:	ICSA	ICSAB	ICSA1		ICSAB1		ICSA2		ICSAB2	
Metal	True	True	Results	% Rec	Results	% Rec	Results	% Rec	Results	% Rec
Aluminum	500000	500000	497000	99.4	487000	97.4	508000	101.6	506000	101.2
Antimony		1000	1.8		982	98.2	-4.2		1050	105.0
Arsenic		1000	0.0		983	98.3	2.6		1050	105.0
Barium		500	2.2		516	103.2	-1.3		547	109.4
Beryllium		500	-0.10		486	97.2	0.0		489	97.8
Cadmium		1000	0.10		922	92.2	4.1		925	92.5
Calcium	500000	500000	466000	93.2	471000	94.2	444000	88.8	454000	90.8
Chromium		500	-0.80		425	85.0	-0.40		426	85.2
Cobalt		500	0.10		491	98.2	0.30		479	95.8
Copper		500	1.5		502	100.4	0.70		553	110.6
Iron	200000	200000	187000	93.5	187000	93.5	178000	89.0	178000	89.0
Lead		1000	0.10		986	98.6	8.1		963	96.3
Magnesium	500000	500000	508000	101.6	516000	103.2	485000	97.0	496000	99.2
Manganese		500	0.30		437	87.4	0.40		438	87.6
Molybdenum		1000	0.50		933	93.3	0.0		959	95.9
Nickel		1000	0.80		984	98.4	2.9		963	96.3
Potassium			6.8		0.10		-14		-17	
Selenium		1000	0.0		972	97.2	-4.2		1030	103.0
Silver		1000	0.10		1110	111.0	1.0		1140	114.0
Sodium			-180		-240		-450		-1700	
Strontium		1000	-5.9		-6.0	0.0	-5.0		-5.1	0.0
Thallium		1000	1.3		955	95.5	7.6		941	94.1
Tin		1000	6.1		931	93.1	7.5		907	90.7
Titanium		1000	4.7		5.4	0.5	4.7		5.5	0.6
Vanadium		500	-0.50		435	87.0	0.60		451	90.2
Zinc		1000	-4.4		883	88.3	-4.4		847	84.7

(*) Outside of QC limits
(anr) Analyte not requested

Accutest Laboratories Instrument Runlog
Inorganics Analyses

Login Number: F77899
Account: TETTNOAK - Tetra Tech, Inc
Project: Holloman AFB; Alamogordo, NM

File ID: H21118S5.PRN Date Analyzed: 11/18/10 Methods: SW846 7471B
Analyst: LM Run ID: MA8518
Parameters: Hg

Time	Sample Description	Dilution Factor	PS Recov	Comments
08:54	MA8518-STD1	1		STD02REP1
08:56	MA8518-STD2	1		STD03REP1
08:58	MA8518-STD3	1		STD04REP1
09:01	MA8518-STD4	1		STD05REP1
09:03	MA8518-STD5	1		STD06REP1
09:07	MA8518-STD6	1		STD01REP1
09:10	MA8518-HSTD1	1		
09:12	MA8518-ICV1	1		
09:14	MA8518-ICB1	1		
09:17	MA8518-CRI1	1		
09:32	MA8518-CCV1	1		
09:34	MA8518-CCB1	1		
09:36	MP19499-MB1	1		
09:38	MP19499-B1	1		
09:40	F77991-3	1		(sample used for QC only; not part of login F77899)
09:42	MP19499-D1	1		
09:45	MP19499-SD1	5		
09:47	MP19499-S1	1		
09:49	MP19499-S2	1		
09:52	ZZZZZZ	1		
09:55	ZZZZZZ	1		
09:57	ZZZZZZ	1		
09:59	MA8518-CCV2	1		
10:02	MA8518-CCB2	1		
10:13	ZZZZZZ	1		
10:16	ZZZZZZ	1		
10:18	ZZZZZZ	1		
10:20	ZZZZZZ	1		
10:23	ZZZZZZ	1		
10:25	ZZZZZZ	1		
10:27	ZZZZZZ	1		
10:29	ZZZZZZ	1		
10:32	ZZZZZZ	1		

Accutest Laboratories Instrument Runlog
Inorganics Analyses

Login Number: F77899
Account: TETTNOAK - Tetra Tech, Inc
Project: Holloman AFB; Alamogordo, NM

File ID: H21118S5.PRN Date Analyzed: 11/18/10 Methods: SW846 7471B
Analyst: LM Run ID: MA8518
Parameters: Hg

Time	Sample Description	Dilution Factor	PS Recov	Comments
10:34	ZZZZZZ	1		
10:36	MA8518-CCV3	1		
10:39	MA8518-CCB3	1		
10:41	ZZZZZZ	1		
10:43	ZZZZZZ	1		
10:46	ZZZZZZ	1		
10:48	ZZZZZZ	1		
10:50	ZZZZZZ	1		
10:53	ZZZZZZ	1		
10:55	MP19500-MB1	1		
10:58	MP19500-B1	1		
11:00	F77969-2	1		(sample used for QC only; not part of login F77899)
11:02	MP19500-D1	1		
11:05	MA8518-CCV4	1		
11:08	MA8518-CCB4	1		
11:10	MP19500-SD1	5		
11:12	MP19500-S1	1		
11:15	MP19500-S2	1		
11:17	ZZZZZZ	1		
11:19	ZZZZZZ	1		
11:21	ZZZZZZ	1		
11:23	ZZZZZZ	1		
11:26	F77899-13	1		
11:28	F77899-14	1		
11:30	F77899-15	1		
11:32	MA8518-CCV5	1		
11:34	MA8518-CCB5	1		
11:37	F77899-16	1		
11:39	F77899-17	1		
11:42	F77899-18	1		
11:44	F77899-19	1		
11:46	F77899-20	1		
---------->	Last reportable sample/prep for job F77899			
11:48	ZZZZZZ	1		

Accutest Laboratories Instrument Runlog
Inorganics Analyses

Login Number: F77899
Account: TETTNOAK - Tetra Tech, Inc
Project: Holloman AFB; Alamogordo, NM

File ID: H21118S5.PRN Date Analyzed: 11/18/10 Methods: SW846 7471B
Analyst: LM Run ID: MA8518
Parameters: Hg

Time	Sample Description	Dilution Factor	PS Recov	Comments
11:51	ZZZZZZ	1		
11:53	ZZZZZZ	1		
11:55	ZZZZZZ	1		
11:58	MA8518-CRI2	1		
12:00	MA8518-CCV6	1		
12:02	MA8518-CCB6	1		

----------> Last reportable CCB for job F77899
Refer to raw data for calibration curve and standards.

8.4
8

BLANK RESULTS SUMMARY
Part 1 - Initial and Continuing Calibration Blanks

Login Number: F77899
Account: TETTNOAK - Tetra Tech, Inc
Project: Holloman AFB; Alamogordo, NM

File ID: H21118S5.PRN Date Analyzed: 11/18/10 Methods: SW846 7471B
QC Limits: result < RL Run ID: MA8518 Units: ug/l

Time:			09:14		09:34		10:02		10:39	
Sample ID:			ICB1		CCB1		CCB2		CCB3	
Metal	RL	IDL	raw	final	raw	final	raw	final	raw	final
Mercury	1.0	.071	-0.027	<1.0	-0.078	<1.0	-0.022	<1.0	0.048	<1.0

(*) Outside of QC limits
(anr) Analyte not requested

BLANK RESULTS SUMMARY
Part 1 - Initial and Continuing Calibration Blanks

Login Number: F77899
Account: TETTNOAK - Tetra Tech, Inc
Project: Holloman AFB; Alamogordo, NM

File ID: H21118S5.PRN Date Analyzed: 11/18/10 Methods: SW846 7471B
QC Limits: result < RL Run ID: MA8518 Units: ug/l

Time:			11:08		11:34		12:02	
Sample ID:			CCB4		CCB5		CCB6	
Metal	RL	IDL	raw	final	raw	final	raw	final
Mercury	1.0	.071	0.15	<1.0	-0.070	<1.0	-0.10	<1.0

(*) Outside of QC limits
(anr) Analyte not requested

CALIBRATION CHECK STANDARDS SUMMARY
Initial and Continuing Calibration Checks

Login Number: F77899
Account: TETTNOAK - Tetra Tech, Inc
Project: Holloman AFB; Alamogordo, NM

File ID: H21118S5.PRN Date Analyzed: 11/18/10 Methods: SW846 7471B
QC Limits: 90 to 110 % Recovery Run ID: MA8518 Units: ug/l

Time:		09:12			09:32			09:59	
Sample ID:	ICV	ICV1		CCV	CCV1		CCV	CCV2	
Metal	True	Results	% Rec	True	Results	% Rec	True	Results	% Rec
Mercury	3	2.8	93.3	3.0	3.0	100.0	3	3.2	106.7

(*) Outside of QC limits
(anr) Analyte not requested

8.4.2
8

CALIBRATION CHECK STANDARDS SUMMARY
Initial and Continuing Calibration Checks

Login Number: F77899
Account: TETTNOAK - Tetra Tech, Inc
Project: Holloman AFB; Alamogordo, NM

File ID: H21118S5.PRN Date Analyzed: 11/18/10 Methods: SW846 7471B
QC Limits: 90 to 110 % Recovery Run ID: MA8518 Units: ug/l

Time:		10:36			11:05			11:32	
Sample ID:	CCV	CCV3		CCV	CCV4		CCV	CCV5	
Metal	True	Results	% Rec	True	Results	% Rec	True	Results	% Rec
Mercury	3	3.2	106.7	3	3.2	106.7	3	3.1	103.3

(*) Outside of QC limits
(anr) Analyte not requested

CALIBRATION CHECK STANDARDS SUMMARY
Initial and Continuing Calibration Checks

Login Number: F77899
Account: TETTNOAK - Tetra Tech, Inc
Project: Holloman AFB; Alamogordo, NM

File ID: H21118S5.PRN Date Analyzed: 11/18/10 Methods: SW846 7471B
QC Limits: 90 to 110 % Recovery Run ID: MA8518 Units: ug/l

Time:		12:00	
Sample ID:	CCV	CCV6	
Metal	True	Results	% Rec
Mercury	3.0	3.0	100.0

(*) Outside of QC limits
(anr) Analyte not requested

8.4.2
8

HIGH STANDARD CHECK SUMMARY

Login Number: F77899
Account: TETTNOAK - Tetra Tech, Inc
Project: Holloman AFB; Alamogordo, NM

File ID: H21118S5.PRN Date Analyzed: 11/18/10 Methods: SW846 7471B
QC Limits: 95 to 105 % Recovery Run ID: MA8518 Units: ug/l

Time:		09:10	
Sample ID:	HSTD	HSTD1	
Metal	True	Results	% Rec
Mercury	6	5.9	98.3

(*) Outside of QC limits
(anr) Analyte not requested

8.4.3

8

LOW CALIBRATION CHECK STANDARDS SUMMARY

Login Number: F77899
Account: TETTNOAK - Tetra Tech, Inc
Project: Holloman AFB; Alamogordo, NM

File ID: H21118S5.PRN Date Analyzed: 11/18/10 Methods: SW846 7471B
QC Limits: 80 to 120 % Recovery Run ID: MA8518 Units: ug/l

Time:			09:17		11:58	
Sample ID:	CRI	CRIA	CRI1		CRI2	
Metal	True	True	Results	% Rec	Results	% Rec
Mercury	0.20		0.20	100.0	0.30	150.0*(a

(*) Outside of QC limits
(anr) Analyte not requested
(a) Possible instrument baseline drift.

8.4.4

8

BLANK RESULTS SUMMARY
Part 2 - Method Blanks

Login Number: F77899
Account: TETTNOAK - Tetra Tech, Inc
Project: Holloman AFB; Alamogordo, NM

QC Batch ID: MP19447
Matrix Type: SOLID

Methods: SW846 6010C
Units: mg/kg

Prep Date: 11/10/10

Metal	RL	IDL	MDL	MB raw	final
Aluminum	10	1	1.2		
Antimony	1.0	.05	.1		
Arsenic	0.50	.05	.1	-0.12	<0.50
Barium	10	.05	.5	-0.070	<10
Beryllium	0.25	.005	.05		
Cadmium	0.20	.005	.05	-0.010	<0.20
Calcium	250	2.5	5		
Chromium	0.50	.05	.05	0.060	<0.50
Cobalt	2.5	.05	.05		
Copper	1.3	.05	.1		
Iron	15	1.7	1.7		
Lead	1.0	.05	.05	0.0050	<1.0
Magnesium	250	2.5	5		
Manganese	0.75	.05	.05		
Molybdenum	2.5	.05	.05		
Nickel	2.0	.05	.05		
Potassium	500	2.5	25		
Selenium	1.0	.1	.2	0.15	<1.0
Silver	0.50	.05	.05	-0.0050	<0.50
Sodium	500	38	55		
Strontium	0.50	.05	.05		
Thallium	0.50	.05	.13		
Tin	2.5	.05	.05		
Titanium	0.50	.055	.1		
Vanadium	2.5	.05	.05		
Zinc	1.0	.05	.25		

Associated samples MP19447: F77899-13, F77899-14, F77899-15, F77899-16

Results < IDL are shown as zero for calculation purposes
(*) Outside of QC limits
(anr) Analyte not requested

MATRIX SPIKE AND DUPLICATE RESULTS SUMMARY

Login Number: F77899
Account: TETTNOAK - Tetra Tech, Inc
Project: Holloman AFB; Alamogordo, NM

QC Batch ID: MP19447
Matrix Type: SOLID

Methods: SW846 6010C
Units: mg/kg

Prep Date:			11/10/10					11/10/10	
Metal	F77899-13 Original	DUP	RPD	QC Limits	F77899-13 Original	MS	Spikelot MPFLICP1	% Rec	QC Limits
Aluminum									
Antimony									
Arsenic	0.79	0.72	9.3	0-20	0.79	130	116	111.3	80-120
Barium	41.4	42.4	2.4	0-20	41.4	163	116	104.7	80-120
Beryllium									
Cadmium	0.45	0.47	4.3	0-20	0.45	2.7	2.9	77.5N(c)	80-120
Calcium									
Chromium	2.8	3.3 (a)	3.1	0-20	2.8	15.4 (a)	11.6	105.1	80-120
Cobalt									
Copper									
Iron									
Lead	1.6	1.7 (a)	34.5 (b)	0-20	1.6	28.4 (a)	29	93.7	80-120
Magnesium									
Manganese									
Molybdenum									
Nickel									
Potassium									
Selenium	0.0	0.0 (a)	NC	0-20	0.0	125 (a)	116	107.6	80-120
Silver	0.28	0.0	200.0(b)	0-20	0.28	3.0	2.9	93.7	80-120
Sodium									
Strontium									
Thallium									
Tin									
Titanium									
Vanadium									
Zinc									

Associated samples MP19447: F77899-13, F77899-14, F77899-15, F77899-16

Results < IDL are shown as zero for calculation purposes
(*) Outside of QC limits
(N) Matrix Spike Rec. outside of QC limits
(anr) Analyte not requested
(a) Elevated reporting limit(s) due to matrix interference.
(b) RPD acceptable due to low duplicate and sample concentrations.
(c) Spike recovery indicates possible matrix interference and/or sample nonhomogeneity.

MATRIX SPIKE AND DUPLICATE RESULTS SUMMARY

Login Number: F77899
Account: TETTNOAK - Tetra Tech, Inc
Project: Holloman AFB; Alamogordo, NM

QC Batch ID: MP19447
Matrix Type: SOLID

Methods: SW846 6010C
Units: mg/kg

Prep Date: 11/10/10

Metal	F77899-13 Original	MSD	Spikelot MPFLICP1	% Rec	MSD RPD	QC Limit
Aluminum						
Antimony						
Arsenic	0.79	99.3	86.9	113.4	26.8 (a)	20
Barium	41.4	126	86.9	97.4	25.6 (a)	20
Beryllium						
Cadmium	0.45	2.0	2.17	71.4N(b)	29.8 (a)	20
Calcium						
Chromium	2.8	12.4 (c)	8.69	105.9	21.6 (a)	20
Cobalt						
Copper						
Iron						
Lead	1.6	23.5 (c)	21.7	102.7	18.9	20
Magnesium						
Manganese						
Molybdenum						
Nickel						
Potassium						
Selenium	0.0	95.4 (c)	86.9	109.8	26.9 (a)	20
Silver	0.28	2.3	2.17	93.0	26.4 (a)	20
Sodium						
Strontium						
Thallium						
Tin						
Titanium						
Vanadium						
Zinc						

Associated samples MP19447: F77899-13, F77899-14, F77899-15, F77899-16

Results < IDL are shown as zero for calculation purposes
(*) Outside of QC limits
(N) Matrix Spike Rec. outside of QC limits
(anr) Analyte not requested
(a) High RPD due to possible sample nonhomogeneity.
(b) Spike recovery indicates possible matrix interference and/or sample nonhomogeneity.
(c) Elevated reporting limit(s) due to matrix interference.

SPIKE BLANK AND LAB CONTROL SAMPLE SUMMARY

Login Number: F77899
Account: TETTNOAK - Tetra Tech, Inc
Project: Holloman AFB; Alamogordo, NM

QC Batch ID: MP19447
Matrix Type: SOLID

Methods: SW846 6010C
Units: mg/kg

Prep Date: 11/10/10

Metal	BSP Result	Spikelot MPFLICP1	% Rec	QC Limits
Aluminum				
Antimony				
Arsenic	99.8	100	99.8	80-120
Barium	106	100	106.0	80-120
Beryllium				
Cadmium	2.6	2.5	104.0	80-120
Calcium				
Chromium	10.7	10	107.0	80-120
Cobalt				
Copper				
Iron				
Lead	24.6	25	98.4	80-120
Magnesium				
Manganese				
Molybdenum				
Nickel				
Potassium				
Selenium	97.7	100	97.7	80-120
Silver	2.3	2.5	92.0	80-120
Sodium				
Strontium				
Thallium				
Tin				
Titanium				
Vanadium				
Zinc				

Associated samples MP19447: F77899-13, F77899-14, F77899-15, F77899-16

Results < IDL are shown as zero for calculation purposes
(*) Outside of QC limits
(anr) Analyte not requested

SERIAL DILUTION RESULTS SUMMARY

Login Number: F77899
Account: TETTNOAK - Tetra Tech, Inc
Project: Holloman AFB; Alamogordo, NM

QC Batch ID: MP19447
Matrix Type: SOLID

Methods: SW846 6010C
Units: ug/l

Prep Date: 11/10/10

Metal	F77899-13 Original	SDL 1:5	%DIF	QC Limits
Aluminum				
Antimony				
Arsenic	19.2	19.4	1.0	0-10
Barium	1000	1140	14.0*(a)	0-10
Beryllium				
Cadmium	10.9	0.500	95.4*(a)	0-10
Calcium				
Chromium	67.7	60.7	22.5 (b)	0-10
Cobalt				
Copper				
Iron				
Lead	39.4	0.00	100.0(b)	0-10
Magnesium				
Manganese				
Molybdenum				
Nickel				
Potassium				
Selenium	0.00	0.00	NC	0-10
Silver	6.80	0.00	100.0(b)	0-10
Sodium				
Strontium				
Thallium				
Tin				
Titanium				
Vanadium				
Zinc				

Associated samples MP19447: F77899-13, F77899-14, F77899-15, F77899-16

Results < IDL are shown as zero for calculation purposes
(*) Outside of QC limits
(anr) Analyte not requested
(a) Serial dilution indicates possible matrix interference.
(b) Percent difference acceptable due to low initial sample concentration (< 50 times IDL).

POST DIGESTATE SPIKE SUMMARY

Login Number: F77899
Account: TETTNOAK - Tetra Tech, Inc
Project: Holloman AFB; Alamogordo, NM

QC Batch ID: MP19447
Matrix Type: SOLID

Methods: SW846 6010C
Units: ug/l

Prep Date: 11/10/10

Metal	Sample ml	Final ml	F77899-13 Raw	Corr.**	PS ug/l	Spike ml	Spike ug/ml	Spike ug/l	% Rec	QC Limits
Aluminum										
Antimony										
Arsenic										
Barium	9.8	10	1002	981.96	1251	0.2	12.5	250	107.6	80-120
Beryllium										
Cadmium	9.8	10	10.9	10.682	44.2	0.2	2.5	50	67.0*(a)	80-120
Calcium										
Chromium										
Cobalt										
Copper										
Iron										
Lead										
Magnesium										
Manganese										
Molybdenum										
Nickel										
Potassium										
Selenium										
Silver										
Sodium										
Strontium										
Thallium										
Tin										
Titanium										
Vanadium										
Zinc										

Associated samples MP19447: F77899-13, F77899-14, F77899-15, F77899-16

Results < IDL are shown as zero for calculation purposes
(*) Outside of QC limits
(**) Corr. sample result = Raw * (sample volume / final volume)
(anr) Analyte not requested
(a) Spike recovery indicates matrix interference and/or outside control limits due to high level in sample relative to spike amount.

BLANK RESULTS SUMMARY
Part 2 - Method Blanks

Login Number: F77899
Account: TETTNOAK - Tetra Tech, Inc
Project: Holloman AFB; Alamogordo, NM

QC Batch ID: MP19456
Matrix Type: SOLID

Methods: SW846 6010C
Units: mg/kg

Prep Date: 11/11/10

Metal	RL	IDL	MDL	MB raw	final
Aluminum	10	1	1.2		
Antimony	1.0	.05	.1		
Arsenic	0.50	.05	.1	-0.055	<0.50
Barium	10	.05	.5	0.055	<10
Beryllium	0.25	.005	.05		
Cadmium	0.20	.005	.05	-0.010	<0.20
Calcium	250	2.5	5		
Chromium	0.50	.05	.05	0.080	<0.50
Cobalt	2.5	.05	.05		
Copper	1.3	.05	.1		
Iron	15	1.7	1.7		
Lead	1.0	.05	.05	-0.065	<1.0
Magnesium	250	2.5	5		
Manganese	0.75	.05	.05		
Molybdenum	2.5	.05	.05		
Nickel	2.0	.05	.05		
Potassium	500	2.5	25		
Selenium	1.0	.1	.2	0.095	<1.0
Silver	0.50	.05	.05	-0.0050	<0.50
Sodium	500	38	55		
Strontium	0.50	.05	.05		
Thallium	0.50	.05	.13		
Tin	2.5	.05	.05		
Titanium	0.50	.055	.1		
Vanadium	2.5	.05	.05		
Zinc	1.0	.05	.25		

Associated samples MP19456: F77899-17, F77899-18, F77899-19, F77899-20

Results < IDL are shown as zero for calculation purposes
(*) Outside of QC limits
(anr) Analyte not requested

MATRIX SPIKE AND DUPLICATE RESULTS SUMMARY

Login Number: F77899
Account: TETTNOAK - Tetra Tech, Inc
Project: Holloman AFB; Alamogordo, NM

QC Batch ID: MP19456
Matrix Type: SOLID

Methods: SW846 6010C
Units: mg/kg

Prep Date:			11/11/10					11/11/10	
Metal	F77915-1 Original	DUP	RPD	QC Limits	F77915-1 Original	MS	Spikelot MPFLICP1	% Rec	QC Limits
Aluminum									
Antimony									
Arsenic	0.0	0.0	NC	0-20	0.0	69.5	72.3	96.1	80-120
Barium	0.42	0.51	19.4	0-20	0.42	77.0	72.3	105.9	80-120
Beryllium									
Cadmium	0.0090	0.023	87.5 (a)	0-20	0.0090	1.9	1.81	104.6	80-120
Calcium									
Chromium	0.44	0.44	0.0	0-20	0.44	8.3	7.23	108.7	80-120
Cobalt									
Copper									
Iron									
Lead	0.39	0.39	0.0	0-20	0.39	18.4	18.1	99.6	80-120
Magnesium									
Manganese									
Molybdenum									
Nickel									
Potassium									
Selenium	0.0	0.17	200.0(a)	0-20	0.0	69.2	72.3	95.7	80-120
Silver	0.0	0.0	NC	0-20	0.0	1.7	1.81	94.0	80-120
Sodium									
Strontium									
Thallium									
Tin									
Titanium									
Vanadium									
Zinc									

Associated samples MP19456: F77899-17, F77899-18, F77899-19, F77899-20

Results < IDL are shown as zero for calculation purposes
(*) Outside of QC limits
(N) Matrix Spike Rec. outside of QC limits
(anr) Analyte not requested
(a) RPD acceptable due to low duplicate and sample concentrations.

MATRIX SPIKE AND DUPLICATE RESULTS SUMMARY

Login Number: F77899
Account: TETTNOAK - Tetra Tech, Inc
Project: Holloman AFB; Alamogordo, NM

QC Batch ID: MP19456
Matrix Type: SOLID

Methods: SW846 6010C
Units: mg/kg

Prep Date: 11/11/10

Metal	F77915-1 Original	MSD	Spikelot MPFLICP1	% Rec	MSD RPD	QC Limit
Aluminum						
Antimony						
Arsenic	0.0	78.5	79	99.4	12.2	20
Barium	0.42	85.9	79	108.2	10.9	20
Beryllium						
Cadmium	0.0090	2.1	1.97	105.9	10.0	20
Calcium						
Chromium	0.44	9.2	7.9	110.9	10.3	20
Cobalt						
Copper						
Iron						
Lead	0.39	20.6	19.7	102.4	11.3	20
Magnesium						
Manganese						
Molybdenum						
Nickel						
Potassium						
Selenium	0.0	78.3	79	99.1	12.3	20
Silver	0.0	1.9	1.97	96.2	11.1	20
Sodium						
Strontium						
Thallium						
Tin						
Titanium						
Vanadium						
Zinc						

Associated samples MP19456: F77899-17, F77899-18, F77899-19, F77899-20

Results < IDL are shown as zero for calculation purposes
(*) Outside of QC limits
(N) Matrix Spike Rec. outside of QC limits
(anr) Analyte not requested

SPIKE BLANK AND LAB CONTROL SAMPLE SUMMARY

Login Number: F77899
Account: TETTNOAK - Tetra Tech, Inc
Project: Holloman AFB; Alamogordo, NM

QC Batch ID: MP19456
Matrix Type: SOLID

Methods: SW846 6010C
Units: mg/kg

Prep Date: 11/11/10

Metal	BSP Result	Spikelot MPFLICP1	% Rec	QC Limits
Aluminum				
Antimony				
Arsenic	98.5	100	98.5	80-120
Barium	107	100	107.0	80-120
Beryllium				
Cadmium	2.6	2.5	104.0	80-120
Calcium				
Chromium	11.2	10	112.0	80-120
Cobalt				
Copper				
Iron				
Lead	25.1	25	100.4	80-120
Magnesium				
Manganese				
Molybdenum				
Nickel				
Potassium				
Selenium	97.1	100	97.1	80-120
Silver	2.4	2.5	96.0	80-120
Sodium				
Strontium				
Thallium				
Tin				
Titanium				
Vanadium				
Zinc				

Associated samples MP19456: F77899-17, F77899-18, F77899-19, F77899-20

Results < IDL are shown as zero for calculation purposes
(*) Outside of QC limits
(anr) Analyte not requested

SERIAL DILUTION RESULTS SUMMARY

Login Number: F77899
Account: TETTNOAK - Tetra Tech, Inc
Project: Holloman AFB; Alamogordo, NM

QC Batch ID: MP19456
Matrix Type: SOLID

Methods: SW846 6010C
Units: ug/l

Prep Date: 11/11/10

Metal	F77915-1 Original	SDL 1:5	%DIF	QC Limits
Aluminum				
Antimony				
Arsenic	0.00	0.00	NC	0-10
Barium	9.40	20.2	114.9(a)	0-10
Beryllium				
Cadmium	0.200	0.00	100.0(a)	0-10
Calcium				
Chromium	9.80	8.50	13.3 (a)	0-10
Cobalt				
Copper				
Iron				
Lead	8.70	12.2	40.2 (a)	0-10
Magnesium				
Manganese				
Molybdenum				
Nickel				
Potassium				
Selenium	0.00	0.00	NC	0-10
Silver	0.00	0.00	NC	0-10
Sodium				
Strontium				
Thallium				
Tin				
Titanium				
Vanadium				
Zinc				

Associated samples MP19456: F77899-17, F77899-18, F77899-19, F77899-20

Results < IDL are shown as zero for calculation purposes
(*) Outside of QC limits
(anr) Analyte not requested
(a) Percent difference acceptable due to low initial sample concentration (< 50 times IDL).

BLANK RESULTS SUMMARY
Part 2 - Method Blanks

Login Number: F77899
Account: TETTNOAK - Tetra Tech, Inc
Project: Holloman AFB; Alamogordo, NM

QC Batch ID: MP19500
Matrix Type: SOLID

Methods: SW846 7471B
Units: mg/kg

Prep Date: 11/18/10

Metal	RL	IDL	MDL	MB raw	final
Mercury	0.083	.0059	.0083	0.0098	<0.083

Associated samples MP19500: F77899-13, F77899-14, F77899-15, F77899-16, F77899-17, F77899-18, F77899-19, F77899-20

Results < IDL are shown as zero for calculation purposes
(*) Outside of QC limits
(anr) Analyte not requested

MATRIX SPIKE AND DUPLICATE RESULTS SUMMARY

Login Number: F77899
Account: TETTNOAK - Tetra Tech, Inc
Project: Holloman AFB; Alamogordo, NM

QC Batch ID: MP19500
Matrix Type: SOLID

Methods: SW846 7471B
Units: mg/kg

Prep Date: 11/18/10 11/18/10

Metal	F77969-2 Original	DUP	RPD	QC Limits	F77969-2 Original	MS	Spikelot HGFLWS1	% Rec	QC Limits
Mercury	0.016	0.015	6.5	0-20	0.016	0.34	0.282	114.9	80-120

Associated samples MP19500: F77899-13, F77899-14, F77899-15, F77899-16, F77899-17, F77899-18, F77899-19, F77899-20

Results < IDL are shown as zero for calculation purposes
(*) Outside of QC limits
(N) Matrix Spike Rec. outside of QC limits
(anr) Analyte not requested

MATRIX SPIKE AND DUPLICATE RESULTS SUMMARY

Login Number: F77899
Account: TETTNOAK - Tetra Tech, Inc
Project: Holloman AFB; Alamogordo, NM

QC Batch ID: MP19500 Methods: SW846 7471B
Matrix Type: SOLID Units: mg/kg

Prep Date: 11/18/10

Metal	F77969-2 Original	MSD	Spikelot HGFLWS1	% Rec	MSD RPD	QC Limit
Mercury	0.016	0.33	0.296	106.0	3.0	20

Associated samples MP19500: F77899-13, F77899-14, F77899-15, F77899-16, F77899-17, F77899-18, F77899-19, F77899-20

Results < IDL are shown as zero for calculation purposes
(*) Outside of QC limits
(N) Matrix Spike Rec. outside of QC limits
(anr) Analyte not requested

SPIKE BLANK AND LAB CONTROL SAMPLE SUMMARY

Login Number: F77899
Account: TETTNOAK - Tetra Tech, Inc
Project: Holloman AFB; Alamogordo, NM

QC Batch ID: MP19500
Matrix Type: SOLID

Methods: SW846 7471B
Units: mg/kg

Prep Date: 11/18/10

Metal	BSP Result	Spikelot HGFLWS1	% Rec	QC Limits
Mercury	0.25	0.25	100.0	80-120

Associated samples MP19500: F77899-13, F77899-14, F77899-15, F77899-16, F77899-17, F77899-18, F77899-19, F77899-20

Results < IDL are shown as zero for calculation purposes
(*) Outside of QC limits
(anr) Analyte not requested

SERIAL DILUTION RESULTS SUMMARY

Login Number: F77899
Account: TETTNOAK - Tetra Tech, Inc
Project: Holloman AFB; Alamogordo, NM

QC Batch ID: MP19500
Matrix Type: SOLID

Methods: SW846 7471B
Units: ug/l

Prep Date: 11/18/10

Metal	F77969-2 Original	SDL 1:5	%DIF	QC Limits
Mercury	0.174	0.650	273.6(a)	0-10

Associated samples MP19500: F77899-13, F77899-14, F77899-15, F77899-16, F77899-17, F77899-18, F77899-19, F77899-20

Results < IDL are shown as zero for calculation purposes
(*) Outside of QC limits
(anr) Analyte not requested
(a) Percent difference acceptable due to low initial sample concentration (< 50 times IDL).

Southeast ACCUTEST LABORATORIES

General Chemistry

QC Data Summaries

Includes the following where applicable:

- Percent Solids Raw Data Summary

Percent Solids Raw Data Summary

Job Number: F77899
Account: TETTNOAK Tetra Tech, Inc
Project: Holloman AFB; Alamogordo, NM

Sample: F77899-1 **Analyzed:** 09-NOV-10 by TC **Method:** SM19 2540G
ClientID: SS39-DPT-01A

Wet Weight (Total)	9.37	g
Tare Weight	1.04	g
Dry Weight (Total)	7.27	g
Solids, Percent	74.8	%

Sample: F77899-2 **Analyzed:** 09-NOV-10 by TC **Method:** SM19 2540G
ClientID: SS39-DPT-01B

Wet Weight (Total)	8.04	g
Tare Weight	1.01	g
Dry Weight (Total)	6.5	g
Solids, Percent	78.1	%

Sample: F77899-3 **Analyzed:** 09-NOV-10 by TC **Method:** SM19 2540G
ClientID: SS39-DPT-01C

Wet Weight (Total)	9.01	g
Tare Weight	1.06	g
Dry Weight (Total)	7.71	g
Solids, Percent	83.6	%

Sample: F77899-4 **Analyzed:** 09-NOV-10 by TC **Method:** SM19 2540G
ClientID: SS39-DPT-02A

Wet Weight (Total)	8.59	g
Tare Weight	1.03	g
Dry Weight (Total)	6.86	g
Solids, Percent	77.1	%

Sample: F77899-5 **Analyzed:** 09-NOV-10 by TC **Method:** SM19 2540G
ClientID: SS39-DPT-02B

Wet Weight (Total)	9.14	g
Tare Weight	1.06	g
Dry Weight (Total)	7.76	g
Solids, Percent	82.9	%

Sample: F77899-6 **Analyzed:** 09-NOV-10 by TC **Method:** SM19 2540G
ClientID: SS39-DPT-02C

Wet Weight (Total)	8.76	g
Tare Weight	1.07	g
Dry Weight (Total)	7.19	g
Solids, Percent	79.6	%

Percent Solids Raw Data Summary

Job Number: F77899
Account: TETTNOAK Tetra Tech, Inc
Project: Holloman AFB; Alamogordo, NM

Sample: F77899-7 **Analyzed:** 09-NOV-10 by TC **Method:** SM19 2540G
ClientID: SS39-DPT-03A

Wet Weight (Total)	7.33	g
Tare Weight	1.08	g
Dry Weight (Total)	5.7	g
Solids, Percent	73.9	%

Sample: F77899-8 **Analyzed:** 09-NOV-10 by TC **Method:** SM19 2540G
ClientID: SS39-DPT-03B

Wet Weight (Total)	8	g
Tare Weight	1.08	g
Dry Weight (Total)	6.36	g
Solids, Percent	76.3	%

Sample: F77899-9 **Analyzed:** 09-NOV-10 by TC **Method:** SM19 2540G
ClientID: SS39-DPT-03C

Wet Weight (Total)	9.21	g
Tare Weight	1.04	g
Dry Weight (Total)	7.3	g
Solids, Percent	76.6	%

Sample: F77899-10 **Analyzed:** 09-NOV-10 by TC **Method:** SM19 2540G
ClientID: SS39-DPT-04A

Wet Weight (Total)	8.96	g
Tare Weight	1.05	g
Dry Weight (Total)	6.81	g
Solids, Percent	72.8	%

Sample: F77899-11 **Analyzed:** 09-NOV-10 by TC **Method:** SM19 2540G
ClientID: SS39-DPT-04B

Wet Weight (Total)	7.93	g
Tare Weight	1.03	g
Dry Weight (Total)	5.59	g
Solids, Percent	66.1	%

Sample: F77899-12 **Analyzed:** 09-NOV-10 by TC **Method:** SM19 2540G
ClientID: SS39-DPT-04C

Wet Weight (Total)	8.22	g
Tare Weight	1.04	g
Dry Weight (Total)	6.29	g
Solids, Percent	73.1	%

Percent Solids Raw Data Summary

Job Number: F77899
Account: TETTNOAK Tetra Tech, Inc
Project: Holloman AFB; Alamogordo, NM

Sample: F77899-13 **Analyzed:** 09-NOV-10 by TC **Method:** SM19 2540G
ClientID: SS39-DPT-15A

Wet Weight (Total)	7.45	g
Tare Weight	1.01	g
Dry Weight (Total)	6.34	g
Solids, Percent	82.8	%

Sample: F77899-14 **Analyzed:** 09-NOV-10 by TC **Method:** SM19 2540G
ClientID: SS39-DPT-15B

Wet Weight (Total)	8.5	g
Tare Weight	.99	g
Dry Weight (Total)	7.2	g
Solids, Percent	82.7	%

Sample: F77899-15 **Analyzed:** 09-NOV-10 by TC **Method:** SM19 2540G
ClientID: SS39-DPT-15C

Wet Weight (Total)	8.8	g
Tare Weight	1.05	g
Dry Weight (Total)	7.54	g
Solids, Percent	83.7	%

Sample: F77899-16 **Analyzed:** 09-NOV-10 by TC **Method:** SM19 2540G
ClientID: SS39-DPT-16A

Wet Weight (Total)	6.58	g
Tare Weight	1.06	g
Dry Weight (Total)	5.56	g
Solids, Percent	81.5	%

Sample: F77899-17 **Analyzed:** 09-NOV-10 by TC **Method:** SM19 2540G
ClientID: SS39-DPT-16B

Wet Weight (Total)	7.86	g
Tare Weight	1.04	g
Dry Weight (Total)	6.62	g
Solids, Percent	81.8	%

Sample: F77899-18 **Analyzed:** 09-NOV-10 by TC **Method:** SM19 2540G
ClientID: SS39-DPT-16C

Wet Weight (Total)	8.24	g
Tare Weight	1	g
Dry Weight (Total)	6.78	g
Solids, Percent	79.8	%

Percent Solids Raw Data Summary

Job Number: F77899
Account: TETTNOAK Tetra Tech, Inc
Project: Holloman AFB; Alamogordo, NM

Sample: F77899-19 **Analyzed:** 09-NOV-10 by TC **Method:** SM19 2540G
ClientID: SS39-DPT-DUP04

Wet Weight (Total)	9.65	g
Tare Weight	1	g
Dry Weight (Total)	7.57	g
Solids, Percent	76	%

Sample: F77899-20 **Analyzed:** 09-NOV-10 by TC **Method:** SM19 2540G
ClientID: SS39-DPT-DUP05

Wet Weight (Total)	9.5	g
Tare Weight	1.07	g
Dry Weight (Total)	7.44	g
Solids, Percent	75.6	%