Kirtland Air Force Base
Albuquerque, New Mexico

Stage 1 Abatement Plan Report for the Bulk Fuels Facility (ST-106)

May 21, 2001

377 ABW/EMC
2050 Wyoming Blvd. SE
Kirtland AFB, New Mexico 87117-5670

ENVIRONMENTAL COMPLIANCE PROGRAM
KIRTLAND AIR FORCE BASE
ALBUQUERQUE, NEW MEXICO

STAGE 1 ABATEMENT PLAN REPORT FOR THE BULK FUELS FACILITY (ST-106)

MAY 21, 2001

Prepared For
HQ AFCEE/ERD
ENVIRONMENTAL RESTORATION DIVISION
BROOKS AFB, TEXAS 78235-5363
DSN: 240-5288 COMM: (210) 536-5288
USAF CONTRACT NO. F41624-00-D-8021 TASK ORDER NO. 0010

Prepared By
CH2M HILL
ALBUQUERQUE, NEW MEXICO

NOTICE

This Stage 1 Abatement Plan Report has been prepared for the U.S. Air Force by CH2M HILL for the purpose of aiding in the implementation of a final remedial action plan under the Environmental Compliance Program (ECP). As the plan relates to actual or possible releases of potentially hazardous substances, its release prior to an Air Force final decision on remedial action may be in the public's interest. The limited objectives of this plan and the ongoing nature of the ECP, along with the evolving knowledge of site conditions and chemical effects on the environment and health, must be considered when evaluating this plan, since subsequent facts may become known which may make this plan premature or inaccurate.

Government agencies and their contractors registered with the Defense Technical Information Center should direct requests for copies of this plan to: Defense Technical Information Center, Cameron Station, Alexandria, Virginia 22304-6145.

Non-government agencies may purchase copies of this document from: National Technical Information Service, 5285 Port Royal Road, Springfield, Virginia 22161.

REPORT DOCUMENTATION PAGE	Form Approved OMB No. 0704-0188

Public reporting burden for this collection of information is estimated to average 1 hour per response, including the time for reviewing instructions, searching existing data sources, gathering and maintaining the data needed, and completing and reviewing the collection of information. Send comments regarding this burden estimate or any other aspect of this collection of information, including suggestions for reducing this burden, to Washington Headquarters Services, Directorate for Information Operations and Reports, 1215 Jefferson Davis Highway, Suite 1204, Arlington, Virginia 22202-4302, and to the Office of Management and Budget, Paperwork Reduction Project (0704-0188), Washington, D.C. 20503.

1. AGENCY USE ONLY	2. REPORT DATE	3. REPORT TYPE AND DATES COVERED
	May 2001	Stage 1 Abatement Plan Report, May 2001

4. TITLE AND SUBTITLE	5. FUNDING NUMBERS
Kirtland Air Force Base Albuquerque, New Mexico Stage 1 Abatement Plan Report	USAF Contract No. F41624-00-D-8021 Delivery Order No. 0010
6. AUTHOR(S) Sharon L. Minchak and William LeFevre, CH2M HILL	
7. PERFORMING ORGANIZATION NAME(S) AND ADDRESS(ES) CH2M HILL 6001 Indian School Road NE, Suite 350 Albuquerque, New Mexico 87110	**8. PERFORMING ORGANIZATION REPORT NUMBER**
9. SPONSORING / MONITORING AGENCY NAME(S) AND ADDRESS(ES) Air Force Center for Environmental Excellence (AFCEE) Environmental Restoration Division (AFCEE/ERDM) 3207 North Road Brooks Air Force Base, Texas 78235-5363	**10. SPONSORING / MONITORING AGENCY REPORT NUMBER**

11. SUPPLEMENTARY NOTES

12a. DISTRIBUTION/AVAILABILITY STATEMENT	12b. DISTRIBUTION CODE

13. ABSTRACT (Maximum 200 words)

This Stage 1 Abatement Plan Report for ST-106, Bulk Fuels Facility, presents the results of the soil and groundwater investigations conducted at the site in 2000 and 2001 for Kirtland AFB, New Mexico.

14. SUBJECT TERMS	15. NUMBER OF PAGES
Stage 1 Abatement Plan Report	500
	16. PRICE CODE

17. SECURITY CLASSIFICATION OF REPORT	18. SECURITY CLASSIFICATION OF THIS PAGE	19. SECURITY CLASSIFICATION	20. LIMITATION OF ABSTRACT
UNCLASSIFIED	UNCLASSIFIED	UNCLASSIFIED	SAR

NSN 7540-01-280-5500

Standard Form 298 (Rev 2-89)
Prescribed by ANSI Std 239-18 298-102

CERTIFICATION

I certify under penalty of law that this document and all attachments were prepared under my direction or supervision in accordance with a system designed to assure that qualified personnel properly gather and evaluate the information submitted. Based on my inquiry of the person or persons who manage the system, or those persons directly responsible for gathering the information, the information submitted is, to the best of my knowledge and belief, true, accurate, and complete. I am aware there are significant penalties for submitting false information, including the possibility of fine and imprisonment for knowing violations.

CHRISTOPHER B. DEWITT, GS-13
Chief, Restoration Program Section
377th Civil Engineer Squadron

This document has been approved for public release.

ROBERT S. MILLIGAN
Environmental Public Affairs Officer

PREFACE

This Stage 1 Abatement Plan Report presents results of the field activities that were performed at Corrective Action Unit (CAU) ST-106, Bulk Fuels Facility at Kirtland Air Force Base (AFB). The plan addresses the requirements of the U.S. Air Force (USAF) statement of work, dated 17 August 2000.

This Stage 1 Abatement Plan Report was prepared by CH2M HILL in May 2001. Mr. Bassim D. Shebaro of the Air Force Center for Environmental Excellence was the Restoration Team Chief and Mr. Rodney Arnold served as the Contracting Officer's Representative.

Michael J. Bitner
CH2M HILL Vice President

Amy R. Halloran, P.E.
CH2M HILL Project Manager

CONTENTS

Section	Page
Preface	v
Acronyms	x
Executive Summary	ES-1
1. INTRODUCTION	1-1
1.1 Objectives and Scope	1-1
1.2 Background Issues	1-1
1.2.1 Site Description	1-1
1.2.2 Operational History	1-3
1.2.3 Existing Data	1-3
1.2.3.1 Non-Sampling Data	1-3
1.2.3.2 Sampling Data	1-4
2. DATA COLLECTION DESIGN AND PROCEDURES	2-1
2.1 Soil-Gas Survey	2-1
2.2 Vadose-Zone Soil Investigation	2-1
2.3 Groundwater Investigation	2-7
3. RESULTS	3-1
3.1 Geologic Logging Results	3-1
3.1.1 Soil Texture	3-1
3.1.2 Moisture Content	3-2
3.2 Soil Sample Analytical Results	3-2
3.2.1 Petroleum Hydrocarbons	3-2
3.2.2 VOCs and SVOCs	3-31
3.3 Soil Screening Results	3-31
3.4 Groundwater Sample Analytical Results	3-31
3.5 Soil-Gas Survey Results	3-32

CONTENTS (Continued)

Section		Page
4.	CONCEPTUAL MODEL	4-1
4.1	Geology	4-1
4.2	Hydrogeology	4-2
4.3	Surface Water Hydrology	4-2
4.4	Waste Characteristics	4-2
4.5	Degree and Extent of Contamination	4-3
4.5.1	Soil Contamination	4-3
4.5.1.1	Shallow Soil Contamination Associated with the November 1999 Releases	4-3
4.5.1.2	Deep Soil Contamination	4-3
4.5.2	Groundwater Contamination	4-3
4.6	Contaminant Source	4-4
4.7	Fate and Transport	4-4
5.	SUMMARY	5-1
REFERENCES		

APPENDICES

Appendix A. Soil Boring Logs

Appendix B. Well Completion Diagrams

Appendix C. Analytical Results

Appendix D. Validation Report

Appendix E. JP4 and JP8 Chemical Compositions

FIGURES

Figure		Page
1-1	KAFB Bulk Fuels Facility (ST-106)	1-2
2-1	Soil-Gas Boring Locations, KAFB Bulk Fuels Facility (ST-106)	2-2
2-2	Soil Boring Locations, KAFB Bulk Fuels Facility (ST-106)	2-3
3-1	Location of Geologic Cross Section A-A', KAFB Bulk Fuels Facility (ST-106)	3-3
3-2	Geologic Cross Section and Estimated Extent of Subsurface Contamination >100 mg/kg	3-5
3-3	Geologic Cross Section and Estimated Extent of Subsurface Contamination >1,000 mg/kg	3-6
3-4	Geologic Cross Section and Estimated Extent of Subsurface Contamination >5,000 mg/kg	3-7
3-5	Horizontal Distribution of TPH Contaminated Soil (ST-106)	3-29

TABLES

Table		Page
2-1	Summary of Soil Boring Methods, Boring Depths, Completions, and Sampling	2-5
3-1	Litho-Stratigraphic Zones at the Bulk Fuels Facility	3-1
3-2	Summary of Reportable Soil Sampling Results for the Soils Investigation at ST-106, Bulk Fuels Facility	3-9
3-3	Summary of Reportable Groundwater Sampling Results at Bulk Fuels Facility (ST-106)	3-31
4-1	Hydrostratigraphic Units at the Bulk Fuels Facility	4-1
4-2	Screening Level for Presence of Free-Phase Hydrocarbons Using Solubility Limits Bulk Fuels Facility (ST-106)	4-4

ACRONYMS

AFB	Air Force Base
ARCH	air rotary casing hammer
av gas	aviation gas
bgs	belowground surface
BTEX	benzene, toluene, ethylbenzene, and xylene
CAU	Corrective Action Unit
CMS	Corrective Measures Study
cu yds	cubic yards
DRO	diesel range organics
EPA	U.S. Environmental Protection Agency
FIR	Facility Investigation Report
GRO	gasoline range organics
HHRB	human health risk-based (EPA Region 6 Human Health Media-Specific Screening Levels)
HSA	hollow stem auger
IRP	Installation Restoration Program
JP	jet fuel
KAFB	Kirtland Air Force Base
µg/L	microgram per liter
MCL	maximum contaminant level
mg/kg	milligram per kilogram
mg/L	milligrams per liter
mi	mile
N/A	not applicable
ND	not detected
NMED	New Mexico Environment Department
PID	photoionization detector
ppm	parts per million
PVC	polyvinyl chloride

RCRA	Resource Conservation and Recovery Act
RFI	RCRA Facility Investigation
SVMW	soil-vapor monitoring well
SVOC	semi-volatile organic compound
TPH	total petroleum hydrocarbon
USAF	U.S. Air Force
USCS	Unified Soil Classification System
UST	underground storage tank
USTB	Underground Storage Tank Bureau
VOC	volatile organic compound
WRRI	Water Resources Research Institute

Executive Summary

EXECUTIVE SUMMARY

CH2M HILL has prepared this Stage 1 Abatement Plan Report to describe the results of the Stage 1 Abatement activities conducted at site ST-106, Kirtland Air Force Base Bulk Fuels Facility. This investigation assessed the site geology and hydrogeology and the nature, extent, and magnitude of petroleum hydrocarbon releases associated with operations at the site.

This investigation was designed to delineate the horizontal and vertical extent of petroleum hydrocarbon contamination in vadose-zone soils associated with the documented November 1999 releases and possible undocumented historic releases at the site. Initially, a soil-gas screening survey was conducted to locate possible undocumented historic releases at the site. Surface and subsurface soil samples were then collected using direct-push, hollow-stem auger, and air-rotary casing-hammer drill rigs to delineate the horizontal and vertical extent of petroleum hydrocarbon contamination in vadose-zone soils. A groundwater monitoring well also was installed and groundwater samples were collected to determine if the groundwater at the Bulk Fuels Facility has been impacted.

Shallow subsurface (≈4 ft below ground surface [bgs]) soil samples collected from SB-02 through SB-04 contained no detectable petroleum hydrocarbons. This suggests that the emergency response to the November 1999 spills was successful at limiting the transport of contaminated soil.

Subsurface petroleum fuel contamination also was identified in two deep soil borings (SB-25 and SB-26). These two borings were located on the eastern and western ends of the offloading rack. The maximum concentration detected in boring SB-25 was 81,000 parts per million (ppm) total petroluem hydrocarbons (TPH) in the sample from 105 ft bgs. The maximum concentration detected in boring SB-26 was 114,000 ppm TPH in the sample from 270 ft bgs. Additional borings were installed to determine the horizontal extent of the soils that have TPH concentrations greater than 100 milligrams per kilograms. Data from these additional borings demonstrate that the soils contaminated in excess of the New Mexico Environment Department action level are limited to within about 310 ft of the surface, and within the area 65 ft south (SB-29A), 280 ft north (SB-34), 400 ft east (SB-32), and 175 ft west (SB-33) of the offloading rack. The total area of soil affected by the petroleum hydrocarbon contamination is estimated to be roughly 6.5 acres with depths of contamination as deep at 310 ft bgs.

Section 1

1. INTRODUCTION

CH2M HILL has prepared this Stage 1 Abatement Plan Report to describe the results of the Stage 1 Abatement activities conducted at site ST-106, Kirtland Air Force Base (AFB) Bulk Fuels Facility. This investigation assessed the site geology and hydrogeology and the nature, extent, and magnitude of petroleum hydrocarbon releases associated with operations at the site. This Stage 1 Abatement Plan has been prepared in accordance with the Resource Conservation and Recovery Act (RCRA) Sampling and Analysis Plans/Work Plans outline provided to the base by the New Mexico Environment Department (NMED, 1998) with modifications made to reflect specific requirements of the NMED Ground Water Quality Bureau Stage 1 Abatement Plan site investigation requirements.

1.1 Objectives and Scope

The objectives of the Stage 1 Abatement investigation were to:

- Define the site geology and hydrogeology.
- Delineate the horizontal and vertical extent and magnitude of potential petroleum hydrocarbon contamination in the vadose-zone soils.
- Collect and review available regional hydrogeologic and surface water hydrology data.
- Inventory existing water wells within a 1-mile (mi) radius of the site.

The scope of the Stage 1 Abatement Plan includes known and potential petroleum hydrocarbon release areas within the ST-106 Kirtland AFB Bulk Fuels Facility. The Stage 1 Abatement Plan investigation includes both vadose-zone soils and groundwater at the facility.

1.2 Background Issues

1.2.1 Site description

This Kirtland AFB Bulk Fuels Facility is located in the western part of Kirtland AFB (Figure 1-1). The current fuel facility was installed in approximately 1953. Initially the primary fuel stored at the facility was aviation gasoline (av gas). Av gas was replaced by the less volatile jet fuel 4 (JP4) and then in March/April 1993 JP4 was replaced by the even less volatile JP8. The site currently contains bulk storage for JP8, diesel fuel, and unleaded gasoline.

The jet fuel system consists of two aboveground storage tanks (2.1 and 4.2 million gallons) and one JP8 offloading rack (Building 2405). In the past, fuel was delivered to the offloading rack via rail car, but this was discontinued many years ago and replaced by deliveries from tanker trucks. Fuel is pumped from the tanker trucks through the offloading rack to a pump house (Building 1033) under suction via two 14-inch-diameter belowground transfer lines. The fuel is then pumped under pressure to the aboveground JP8 storage tanks by piping of varying sizes that is partially above and partially belowground. Recent inventory records indicate that approximately 20 to 25 million gallons of product are transferred annually through the offloading rack.

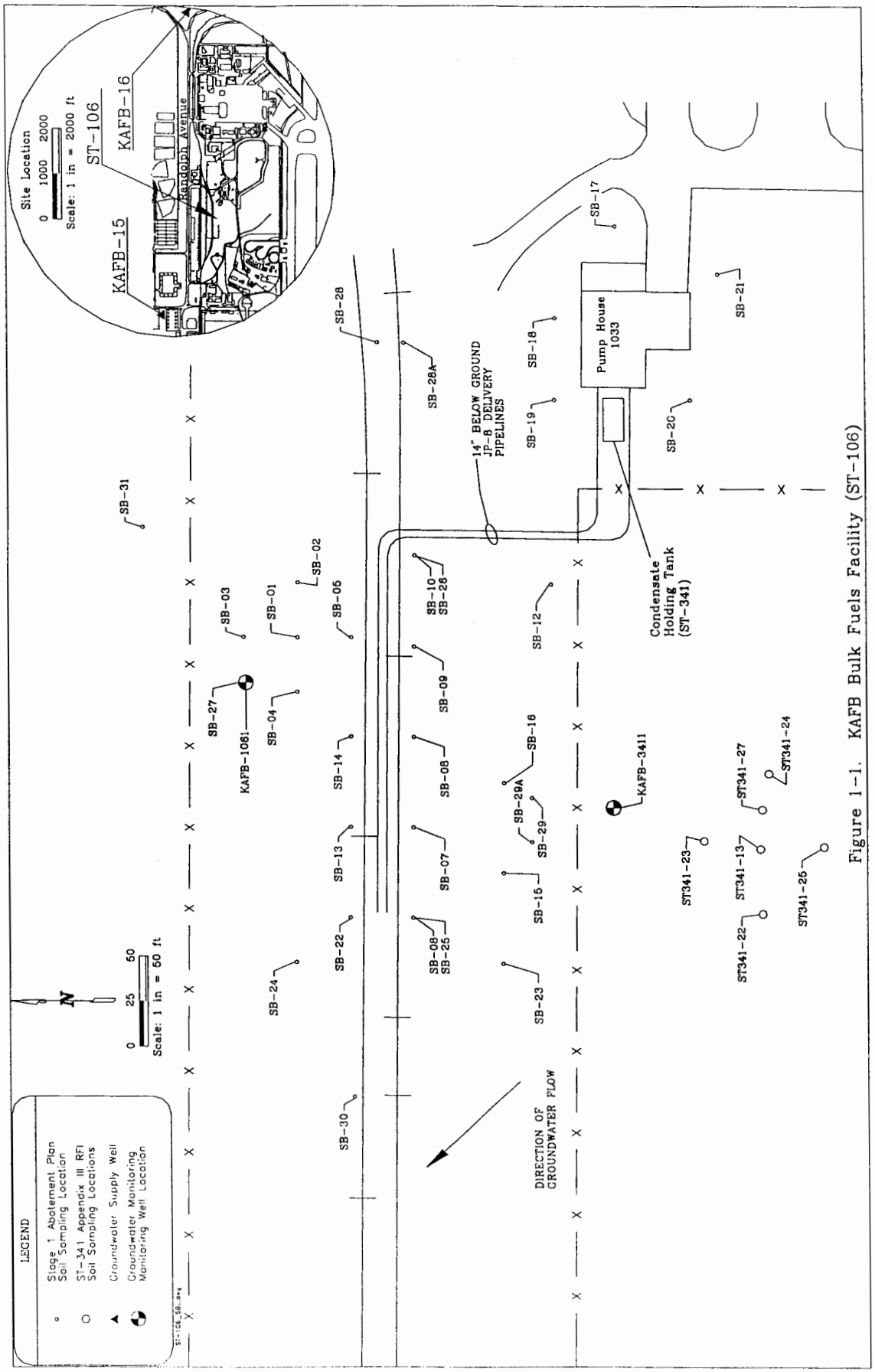

Figure 1-1. KAFB Bulk Fuels Facility (ST-106)

A second fuel system is used for the transfer and storage of diesel and unleaded gasoline fuels and has a considerably smaller product throughput. Diesel fuel is stored in two aboveground storage tanks (5,000 and 10,000 gallons), and unleaded gasoline is stored in one (10,000-gallon) aboveground storage tank. The transfer lines for diesel and unleaded fuel are aboveground.

Fuel is currently delivered from the large aboveground JP8 storage tanks to the base flightline by truck. Fuel was previously delivered to flightline hydrants by pressurized underground piping, which is being investigated as a separate site. Before 1953, jet fuel was delivered from an offsite refinery to the fuel facility by underground piping. These underground fuel lines were decommissioned using practices that were standard at the time of decommission.

Water condensed from jet fuel during transfer is stored in an underground storage tank (UST) located at the facility. This tank formerly overflowed to an evaporation pond. The UST and evaporation pond are being investigated as a separate site, ST-341, which is adjacent to the south side of ST-106.

The groundwater supply wells nearest to the Bulk Fuels Facility are the Veterans Administration Hospital supply well (1,200 ft north), KAFB-15, (1,800 ft west-northwest), and KAFB-16 (3,600 ft east). The City of Albuquerque's Burton Wells #1 and #4 are about 1.8 miles to the northwest of ST-106.

1.2.2 Operational History

The ST-106 facility provides bulk storage of jet fuel, diesel fuel, and unleaded gasoline. Fuels are delivered to the various offloading racks and transferred to aboveground storage tanks. Refueling trucks routinely fill up at the facility and transport fuel as needed to the base flightline.

In November 1999, three known discharges occurred from the lines that transfer fuel from the JP8 offloading rack (Building 2405) to the pump house at the facility. The discharges included a failure of one of the 14-inch-diameter belowground transfer pipelines (pipeline #22) during a hydrostatic pressure test, failure of a cam-lock coupling during a pressure test of the second belowground transfer pipeline (pipeline #23), and failure of the second belowground transfer pipeline (pipeline #23) during a hydrostatic pressure test after the cam-lock coupling problem had been corrected.

The primary belowground transfer pipeline (pipeline #22) had been in a state of failure for an unknown duration and therefore the total amount of fuel released is unknown. The volumes of the second two discharges were estimated to be approximately 200 to 400 gallons, and 30 gallons, respectively. For all discharges, the product released was JP8.

Due to the failure of the belowground fuel pipelines from the main JP8 rack, the JP8 offloading rack (Building 2405) is currently out of use and a temporary alternate offloading rack location has been set up to allow delivery of fuel. A new permanent offloading rack is currently under design and it is planned to be constructed just southeast of the existing rack.

1.2.3 Existing Data

1.2.3.1 Non-Sampling Data

Fuel receipt and delivery records and interviews with former facility managers and employees provided non-sampling data for the Bulk Fuels Facility. Upon discovery of the line failures, fuel transfer records for the Bulk Fuels Facility were reviewed by Kirtland AFB personnel. These indicated a cumulative fuel loss of approximately 138,138 gallons for the period of the preceding 12 months. This amount of fuel represents 0.51 percent of the total volume throughput at the facility during that time. Some of that

discrepancy can be attributed to variations in fuel temperatures (and therefore corresponding differences in densities), line displacement, and vapor losses. This discrepancy is not unusual for older fuel systems such as those present at the Bulk Fuels Facility.

1.2.3.2 Sampling Data

Previous investigations have been conducted under the Kirtland AFB Installation Restoration Program (IRP) and as part of the base's UST compliance upgrades at the Bulk Fuels Facility. Previous investigations conducted at Bulk Fuels Facility include the Appendix III Phase 1 and Appendix III Phase 2 RCRA Facility Investigations (RFIs) (USAF, 1995 and 1997a), an UST investigation (USAF 1996), and a Bioventing Feasibility Site Characterization study (USAF, 1997b), which investigated the Condensate Holding Tank and Evaporation Pond (Corrective Action Unit [CAU] ST-341). Other information is available concerning release-response activities associated with the November 1999 pressure tests. These previous investigations are summarized below.

1996 UST Investigation

A 250-gallon steel UST (designated UST 133) adjacent to the pump house (Building 1033) was used as the condensate holding tank until its removal in 1996. Upon removal, the old UST was observed to be cracked and leaking. The UST was replaced with a 300-gallon UST situated in a concrete vault with an electronic leak monitoring system that is currently in use.

Appendix III Phases 1 and 2

During the Appendix III Phase 1 RFI in July 1994, 29 soil samples were collected from six boreholes surrounding the condensate holding tank at Building 1033, one borehole located near the overflow pipe outflow line in a nearby evaporation pond, and one background borehole in an area away from any known or suspected sources of contamination. During the Phase 2 RFI in October and November 1996, 72 soil samples and five field replicates were collected from 16 boreholes. Full analytical results are available in the Appendix III Phase 1 and Appendix III Phase 2 RFI reports (USAF, 1995 and 1997a).

Following removal of the 250-gallon UST, soil samples were collected from the bottom and walls of the excavation, and 22 samples were collected from a 100-ft-deep soil boring. The results of these RFIs are summarized below.

The 1994 Appendix III Phase 1 RFI and the 1996 Appendix III Phase 2 RFI revealed:

- Diesel range organics (DROs) (5.2 to 2,000 milligram per kilogram [mg/kg]) were detected in 12 samples and gasoline range organics (GROs) (0.22 to 360,000 mg/kg) were detected in 16 samples. Volatile organic compounds (VOCs) commonly associated with JP4 were also detected.

- Petroleum hydrocarbon concentrations were detected in concentrations from 3,000 to 15,000 mg/kg of jet fuel A (an analytical "fingerprint" used to identify JP8).

- The contaminated soils were detected at depths up to 85 ft under the evaporation pond and 37 ft belowground surface (bgs) near the holding tank.

- The horizontal extent was limited to the immediate vicinities of the UST and evaporation pond.

The Appendix III RFIs concluded that a contaminant release had occurred at ST-341. The Appendix III Phase 2 RFI recommended that a Corrective Measures Study (CMS) address contamination associated with the condensate holding tank. A field-scale demonstration project associated with the CMS was implemented and is underway.

A soil-gas survey at ST-341 showed that total petroleum hydrocarbon (TPH) concentrations were high under the evaporation pond but generally increased with depth and to the north and west, which is not consistent with the distribution of TPH in soil samples. The data suggested that there may be another source of TPH vapors below and to the north of the contamination associated with the evaporation pond.

Groundwater monitoring well KAFB-341-01 was installed at ST-341 about 100 ft south and upgradient of the offloading rack. During the installation of this well, VOC odors were noticed in soils deeper than the contaminated soils previously identified at ST-341. Groundwater sampling indicates that detectable but non-quantifiable concentrations of benzene and toluene are present in the groundwater. The concentrations are below the applicable U.S. Environmental Protection Agency (EPA) drinking water standards. Well KAFB-341-01 has been added to the base's Long-Term Monitoring Program and is sampled on a quarterly basis.

As stated in Section 1.2.2, a release occurred in November 1999 during hydrostatic pressure testing of the 14-inch-diameter underground transfer lines from the JP8 offloading rack. Approximately 76 cubic yards (cu yd) of stained surface soil from an approximately 25 ft x 75 ft area were excavated and disposed of offsite. The full details of the release response activities were provided in the 15-day notification of discharge report submitted to the NMED by Kirtland AFB on December 16, 1999.

Section 2

2. DATA COLLECTION DESIGN AND PROCEDURES

This investigation was designed to delineate the horizontal and vertical extent of petroleum hydrocarbon contamination in vadose-zone soils associated with the documented November 1999 releases and possible undocumented historic releases at the site. Initially, a soil-gas screening survey was conducted to locate possible undocumented historic releases at the site. Surface and subsurface soil samples were then collected using direct-push, hollow-stem auger (HSA), and air-rotary casing-hammer (ARCH) drill rigs to delineate the horizontal and vertical extent of petroleum hydrocarbon contamination in vadose-zone soils. A groundwater monitoring well also was installed and groundwater samples were collected to determine if the groundwater at the Bulk Fuels Facility has been impacted.

2.1 Soil-Gas Survey

Soil-gas samples were collected from a depth of approximately 8 to 10 ft at pre-determined grid locations across the site (Figure 2-1). Grids were oriented to examine soil gas near underground fuel pipelines, around the pump house (Building 1033), and along the offloading rack (Building 2305). Samples were collected using ¼-inch Tygon tubing that was installed using a direct-push drill rig. The tubing was purged and samples were collected in 1-liter Tedlar bags using a peristaltic pump. The soil-gas samples were analyzed for fixed gases (Method CFR 3C), JP4, JP8, bulk jet fuel, and a short list of VOCs (SW-846 Methods 8015, 8021 and 5030) by an onsite laboratory.

2.2 Vadose-Zone Soil Investigation

Surface and subsurface soil samples were collected using direct-push, HSA, and ARCH drilling rigs to delineate the degree and extent of petroleum hydrocarbon contamination in vadose-zone soils. Soil samples were collected and analyzed in compliance with applicable NMED regulations.

The direct-push drill rig was used to collect continuous-core soil samples at 23 locations (SB-01 through SB-24, Figure 2-2 and Table 2-1) to a depth of approximately 40 ft bgs (SB-11 was abandoned due to the close proximity of underground utilities). Soil samples were screened for VOCs using a MiniRae 2000 photoionization detector (PID) and logged according to the Unified Soil Classification System (USCS). The soil boring logs for these and all other logged samples are included in Appendix A to this report.

Forty soil samples (typically two per borehole) were submitted for laboratory analysis. Samples from each borehole selected for laboratory analysis were those with high PID measurements and/or the deepest sample collected. Analytical samples were analyzed for DRO and GRO (EPA Method 8015B) and VOCs (EPA Method 8060). Approximately 20 percent of the analytical samples also were analyzed for semivolatile organic compounds (SVOCs) (EPA Method 8070). These shallow soil samples allowed the horizontal extent of the shallow (<40 ft bgs) contamination to be delineated and provided data to allow placement of two locations for deeper soil borings (borings SB-25 and SB-26). Borings SB-25 and SB-26 were installed to asses the vertical extent of contamination.

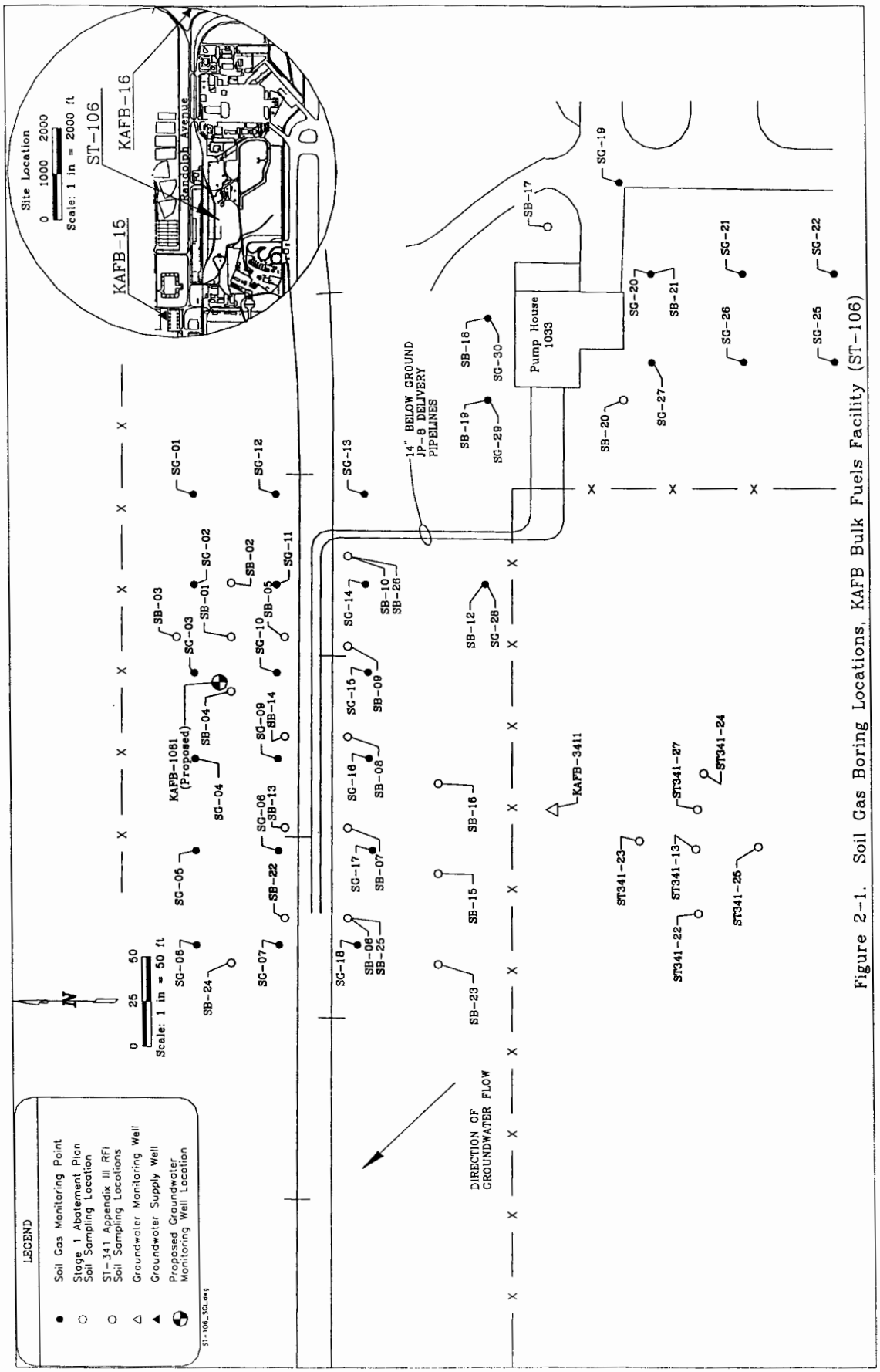

Figure 2-1. Soil Gas Boring Locations, KAFB Bulk Fuels Facility (ST-106)

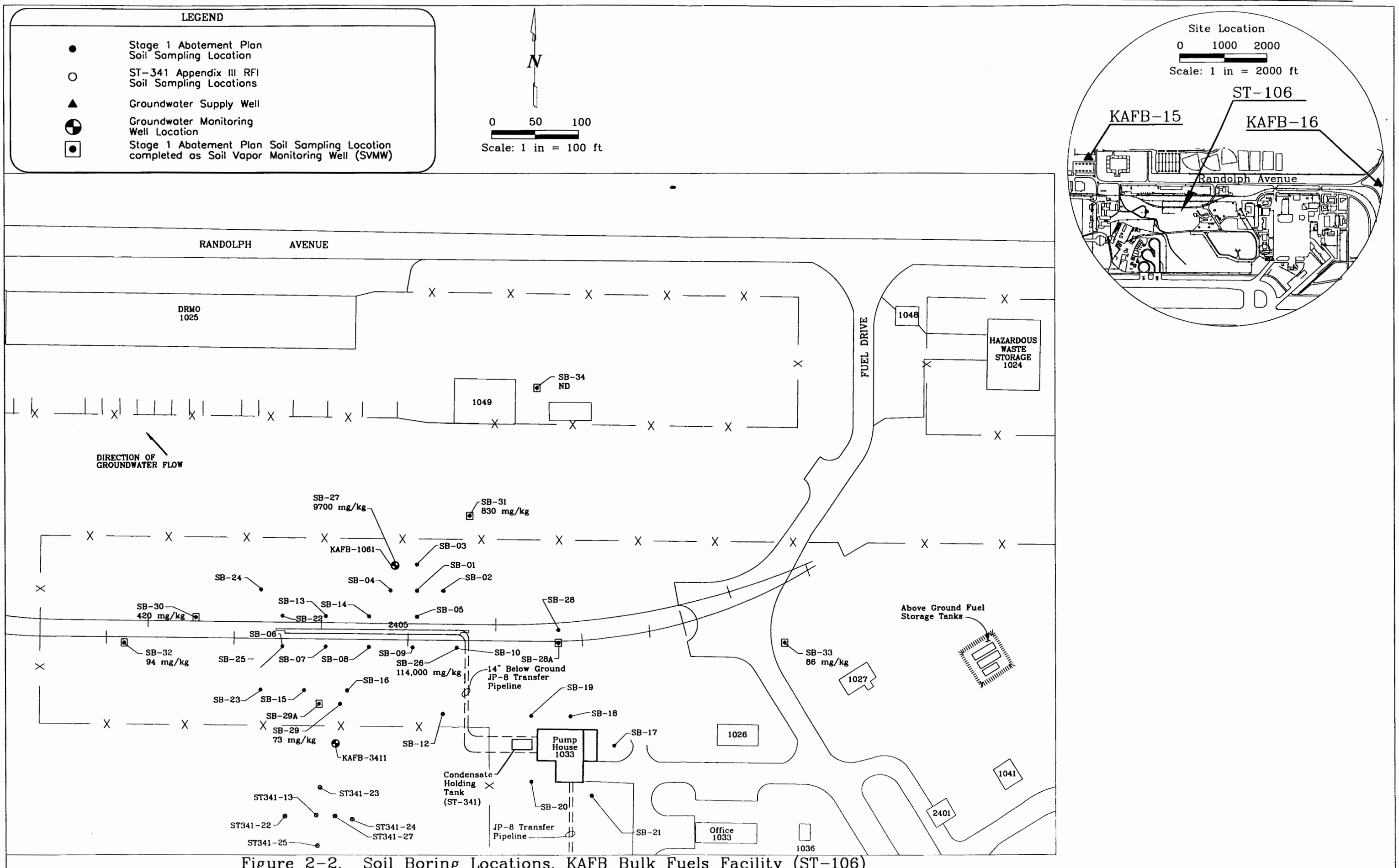

Figure 2-2. Soil Boring Locations, KAFB Bulk Fuels Facility (ST-106)

FIGURE_2-2.dwg

Table 2-1. Summary of Soil Boring Methods, Boring Depths, Completions, and Sampling

		Soil Boring																	
		SB-01	SB-02	SB-03	SB-04	SB-05	SB-06	SB-07	SB-08	SB-09	SB-10	SB-11	SB-12	SB-13	SB-14	SB-15	SB-16	SB-17	SB-18
Drilling Method	Direct Push	X	X	X	X	X	X	X	X	X	X	Never drilled, underground utilities	X	X	X	X	X	X	X
	HSA															Shallow refusal			
	ARCH																		
	ARCH-Stratex																		
Completion	Abandoned	X	X	X	X	X	X	X	X	X	X		X	X	X	X	X	X	X
	SVMW																		
	Groundwater Well																		
# of Analytical Samples		2	2	2	2	2	2	2	2	2	2		1	2	2	0	2	2	2
Max Depth [ft bgs]		55	62	30	35	40	40	40	38	40	40		30	42	41	15	32	40	59

Note: SVMW = Soil-vapor monitoring well.

Table 2-1. Summary of Soils Boring Methods, Boring Depths, Completions, and Sampling (Continued)

		Soil Boring															
		SB-19	SB-20	SB-21	SB-22	SB-23	SB-24	SB-25	SB-26	SB-27	SB-28	SB-29	SB-30	SB-31	SB-32	SB-33	SB-34
Drilling Method	Direct Push	X	X	X	X	X	X										
	HSA							X	X		X	X					
	ARCH										X	X	X	X	X	X	X
	ARCH-Stratex									X							
Completion	Abandoned	X	X	X	X	X	X	X	X								
	SVMW										X	X	X	X	X	X	X
	Groundwater Well									X							
# of Analytical Samples		1	1	1	3	1	2	10	14	23	16	15	11	5	6	8	4
Max Depth [ft bgs]		40	40	34	32	42	40	250	315	510	340	300	330	150	330	310	150

Note: SVMN = Soil-vapor monitoring well.

The HSA drilling rig was used to advance all or part of four deep boreholes (borings SB-25, SB-26, SB-28 and SB-29) to a maximum depth of 315 ft bgs and to collect split-spoon soil samples at approximately 5-ft intervals (Table 2-1 and Figure 2-2). These five borings were installed to assist in the horizontal and vertical delineation of soil contamination. Soil samples were screened for VOCs using a PID and logged according to the USCS. Forty-four samples were submitted for laboratory analysis. Samples from each borehole selected for laboratory analysis were those with high PID measurements and/or depth intervals that provided a good sample depth distribution. All analytical samples were analyzed for DRO and GRO. In addition to the DRO and GRO analyses, 16 samples were analyzed for benzene, toluene, ethylbenzene, and xylene (BTEX) and 18 samples were analyzed for a full suite of VOCs. Seven of the forty-four samples were analyzed for SVOCs. The HSA drill rig was unable to drill to the necessary depth at SB-28 and SB-29, so an ARCH drill rig was used to complete these boreholes as SB-28A and SB-29A.

The ARCH drill rig was used to advance and/or complete seven boreholes to a maximum depth of 340 ft bgs, collecting split-spoon soil samples at 10-ft intervals over the depth of each borehole. These borings included advancement and completion of borings SB-28A and SB-29A and borings SB-30 through SB-34. Soil samples were screened for VOCs using a PID and classified according to the USCS. Forty-five samples were submitted for laboratory analysis. Analytical samples were selected from those soil samples with high PID measurements and/or depth intervals that provided a good sample-depth distribution. Analytical samples were analyzed for DRO and GRO. In addition to the DRO and GRO analyses, four samples were analyzed for BTEX and 17 samples also were analyzed for the full suite of VOCs. Six of the forty-five samples were analyzed for SVOCs. Boreholes SB-28A and SB-29A were drilled within 20 ft of boreholes as SB-28 and SB-29, respectively. These deep soil borings allowed the vertical and horizontal extent of the contaminated soils at ST-106 to be delineated.

Soil borings SB-28A, SB-29A, and SB-30 through SB-34 were completed as soil-vapor-monitoring well (SVMW) nests to support expected continuing Stage 2 Abatement activities. As shown in the well completion diagrams in Appendix B, each SVMW was constructed of ½-inch-diameter, Schedule 80 polyvinyl chloride (PVC). Each individual SVMW in a nest was constructed with single 2½-inch long 0.05-inch slot PVC screen. Screen depths of each SVMW were selected to assist in investigation of the pneumatic conductivity and connectivity of set geologic units, to allow soil-gas sampling from discrete zones, and to provide soil-vapor vent or air-inlet points as part of the Stage 2 Abatement Plan implementation.

Nests SVMW-02 and SVMW-07 have three individual wells contained in a single borehole with screens at approximately 50 ft, 100 ft, and 150 ft bgs. Nests SVMW-01 and SVMW-03 to SVMW-06 have four wells in each borehole with screens at approximately 50 ft, 100 ft, 250 ft, and 300 ft bgs. A coarse gravel pack (8-12 Colorado silica sand) was placed from about 2½ ft below to 2½ ft above each well screen section, providing a 7½-ft sampling interval exposed to the formation. A 4-ft-thick transition zone of fine sand (#30 Colorado silica) and granular bentonite, and a minimum of approximately 40 ft of hydrated bentonite chips provide a seal between each screen interval within boreholes.

Soil samples also were collected from soil boring SB-27, which was completed as groundwater well KAFB-106-1 (Table 2-1 and Figure 2-2). Soil samples were screened for VOCs using a PID and classified according to the USCS. Drill cuttings also were logged. Soil boring SB-27 was advanced to a depth of 510 ft bgs using an ARCH drill rig and a Stratex™ bit. The Stratex™ bit is an under-reaming down-hole-hammer bit that is needed to ensure that the drive casing can be advanced below about 300 ft bgs. Twenty-three samples were submitted for laboratory analysis from this boring. Analytical samples were selected from those soil samples with high PID measurements and/or depth intervals that provided a good sample depth distribution. Analytical samples were analyzed for DRO and GRO. In addition to the

DRO and GRO analyses, eight samples were analyzed for BTEX and five samples were analyzed for the full suite of VOCs. Four of the twenty-three samples were analyzed for SVOCs.

2.3 Groundwater Investigation

Groundwater well KAFB-106-1 was installed to monitor the groundwater at the Bulk Fuels Facility. The well was completed in soil boring SB-27; approximately 65 ft north and 55 ft west of the east end of the offloading rack (Figure 2-2). Well KAFB-106-1 is constructed with 4-inch-diameter, Schedule 80 PVC with 25-ft, 0.010-inch slot well screen placed from 483 ft bgs to 508 ft bgs blank riser with threaded joint connections from 483 ft bgs to the surface (Appendix B).

The screen depth was chosen to cross the unconfined groundwater surface. A coarse gravel pack (10-20 Colorado silica sand) was placed from about 2 ft below to 5 ft above the screen. There is a transition zone of fine sand (#30 Colorado silica) and 5 ft of hydrated granular bentonite above the gravel pack. The remainder of the well annulus is grouted with a Quick Grout bentonite slurry with a concrete surface seal from 0 to 35 ft bgs. The well is completed with 3 ft of stickup and a locking steel surface casing in a 4 ft square concrete pad and surrounded by four concrete-filled bumper posts.

Well KAFB-106-1 was developed by bailing, swabbing, and pumping approximately 1 week after construction. The well was swabbed and bailed until sands were no longer produced and then pumped at approximately 5 gallons per minute until field parameters (temperature, conductivity, and pH) stabilized and turbidity approached zero. Approximately 450 gallons of water were removed during development. Within several hours of development, three well volumes of groundwater were purged and groundwater samples were collected through the electric submersible pump from well KAFB-106-1. Samples were collected and analyzed for DRO, GRO, SVOCs, and VOCs. In addition to the samples collected by CH2M HILL, NMED personnel collected split samples and analyzed them for the same parameters. The well was resampled in April 2001 but the results of those analyses are not yet available.

Section 3

3. RESULTS

3.1 Geologic Logging Results

Soil samples and drill cuttings were logged according to the USCS. Soil boring logs are included in Appendix A.

3.1.1 Soil Texture

Soil types at the Bulk Fuels Facility ranged from lean clays, silts, and sands to minor silty or sandy gravels. These soils can be correlated into eight litho-stratigraphic zones as shown in Table 3-1 and discussed below.

- From the surface to about 85 ft bgs, the soils are primarily thick discontinuous intervals of silt and silty or sandy clays.
- From roughly 86 ft bgs to about 144 ft bgs, two 3-ft to 25-ft-thick units of poorly graded fine-grain sands alternate with two silty, sandy, and lean clay units that are up to 25-ft thick.
- From about 144 ft bgs to about 270 ft bgs there are poorly graded fine-grained sands and well-graded fine- to coarse-grained sands.
- A significant 15-ft-thick clay zone occurs within the lower sandy zone at about 270 ft bgs.

Table 3-1. Litho-Stratigraphic Zones at the Bulk Fuels Facility

Litho-Stratigraphic Zones	Description	Thickness	Approximate Depth Interval
Fine Zone – 1	Thick discontinuous intervals of silt (ML) and silty or sandy clays (CL) w/minor lean clays (CL)	74' to 94'	Surface to ≈86' bgs
Sand Zone – 1	Poorly graded sand (SP) buff colored, fine-grained	15' to 25'	≈86' bgs to ≈107' bgs
Fine Zone – 2	Primarily silty, sandy, and lean clays (CL) with minor silt (ML) zones	13' to 25'	≈107' bgs to ≈125' bgs
Sand Zone – 2	Poorly graded sand (SP) buff colored, fine-grained	3' to 15'	≈125' bgs to ≈140' bgs
Fine Zone – 3	Primarily silty, sandy, and lean clays (CL)	0' to 10'	≈140' bgs to ≈144' bgs
Sand Zone – 3	Poorly graded fine-grained sands (SP) and well-graded fine- to coarse-grained sands (SW) buff colored, w/trace of gravels.	117' to 140'	≈144' bgs to ≈270' bgs
Clay Zone	Lean clay (CL) brown, moist to wet, very stiff w/minor sandy and silty clay (CL)	0' to 15'	≈270' bgs to ≈280' bgs
Sand Zone – 4	Poorly graded fine-grained sands (SP) and well-graded fine- to coarse-grained sands (SW) buff colored, w/higher fraction of gravel (GW) and fine-grained (GM) zones	>137'	≈280' bgs to >517' bgs

- From about 295 ft bgs to the bottom of the deepest borehole at the site is another occurrence of poorly graded fine-grain sands and well-graded fine- to coarse-grain sands but with a higher proportion of silt and gravels than observed from 144 to 270 ft.

The zones described above are a generalization of the subsurface geology and do not indicate the presence of discrete geological layers (as identified in split spoon samples or drill cuttings, Appendix A), which are continuous across the site. The significance of the clay zone observed at 270 ft bgs is the distinct reduction in contaminant concentration observed below that interval. A west-east cross-section (cross-section location shown in Figure 3-1) is illustrated in Figures 3-2 through 3-4.

3.1.2 Moisture Content

Soils at the Bulk Fuel Facility ranged from wet to dry. The finer-grained upper soils were generally moist while the coarser-grained deeper soils could be moist or dry.

During the installation of groundwater monitoring well KAFB-106-1, several minor perched water-bearing zones were observed in the vadose zone above the regional groundwater table. None of these water-bearing zones were substantial enough to merit the installation of a groundwater monitoring well. Some of these water-bearing zones below 400 ft bgs are probably remnants of the regional aquifer left behind as the water table has dropped. The regional water table was reached at about 485 ft bgs as indicated by wet gravelly, sand drill cuttings.

3.2 Soil Sample Analytical Results

The analytical results from subsurface soil sampling are summarized below and in Table 3-2. Full analytical results are included in Appendix C. A validation report for the analytical data is provided as Appendix D. Results are compared to either the NMED's December 2000 soil screening levels (residential scenario), or for those analytes without an NMED risk-based value, to the most recent EPA Region 6 human health risk-based (HHRB) screening levels. Per NMED guidance, screening levels for noncarcinogens have been adjusted to 10 percent of the published screening level to account for possible additive toxicological effects.

3.2.1 Petroleum Hydrocarbons

In various samples collected across the site, both DRO and GRO petroleum hydrocarbons were detected at levels in excess of the NMED Underground Storage Tank Bureau (USTB) action level (100 mg/kg) as well as the New Mexico Oil Conservation Division limit of 5,000 mg/kg. The spatial distribution of TPH contaminated soil is illustrated in Figure 3-2 through Figure 3-5.

Samples collected from shallow soil borings installed to determine the extent of soils contaminated by the November 1999 spills (SB-01 to SB-04) generally showed no detectable levels of TPH contamination except in three relatively deep samples (40 ft and 55 ft from SB-01 and 62 ft from SB-02). The concentration of GRO in these samples ranged from non-detect to 4.1 mg/kg (55 ft bgs in SB-01) and DRO was not detected in any samples.

However, four of the shallow subsurface soil borings closer to the two ends of the offloading rack (SB-05 and SB-10 adjacent to the east end, and SB-06 and SB-22 adjacent to the west end of the JP8 offloading rack) had TPH concentrations in excess of 100 mg/kg. The maximum TPH (combined GRO and DRO) concentrations in these shallow samples ranged from 34,000 mg/kg (32 ft bgs at SB-22) to 51,000 mg/kg

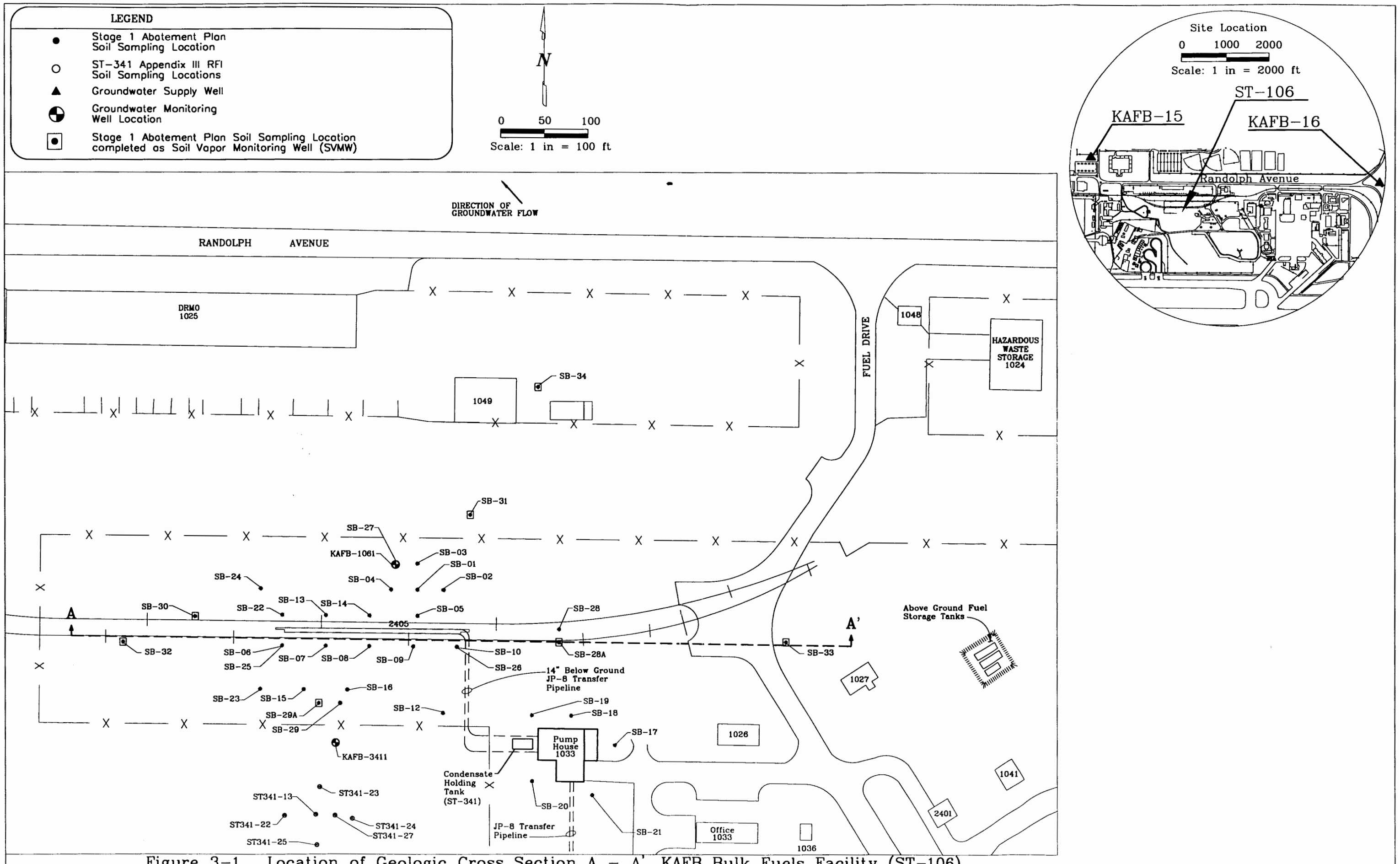

Figure 3-1. Location of Geologic Cross Section A – A', KAFB Bulk Fuels Facility (ST-106)

FIGURE_3-1.dwg

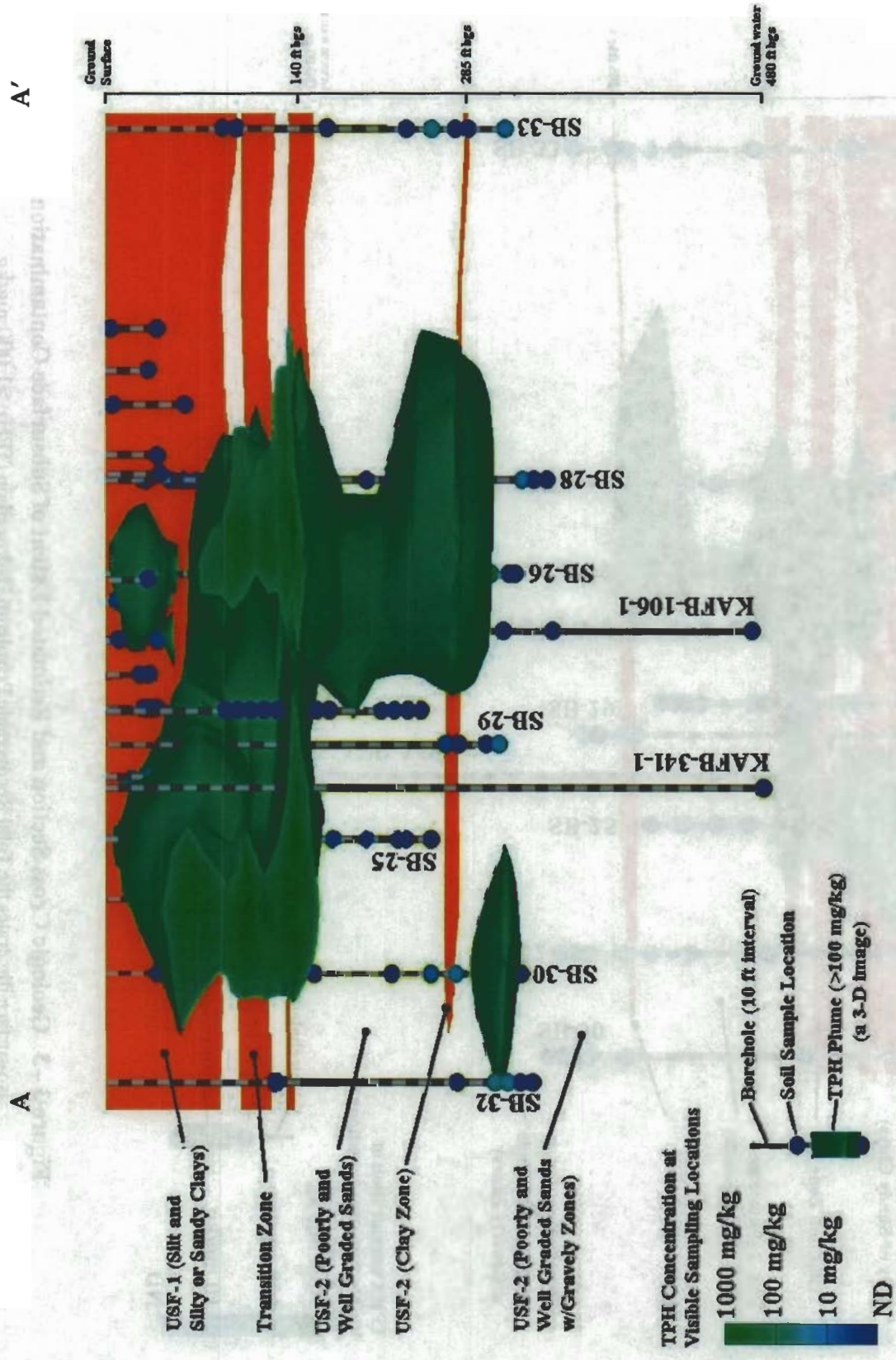

Figure 3 - 2. Geologic Cross Section and Estimated Extent of Subsurface Contamination

Iso-surface illustrates the Total Recoverable Petroleum Hydrocarbon (TPH) >100 mg/kg
View is horizontal from the south. No vertical exaggeration.

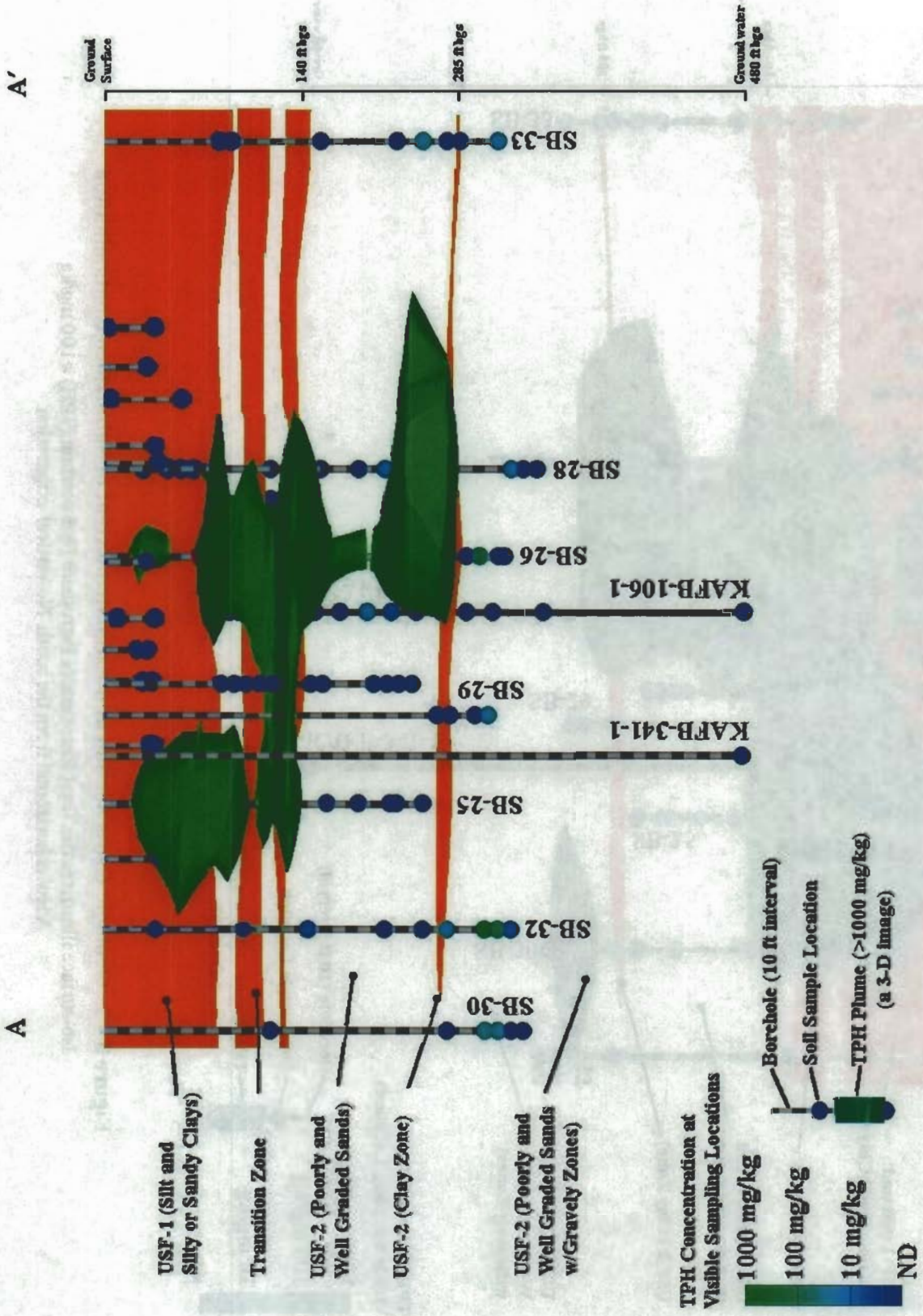

Figure 3 - 3. Geologic Cross Section and Estimated Extent of Subsurface Contamination

Iso-surface illustrates the Total Recoverable Petroleum Hydrocarbon (TPH) >1,000 mg/kg
View is horizontal from the south. No vertical exageration.

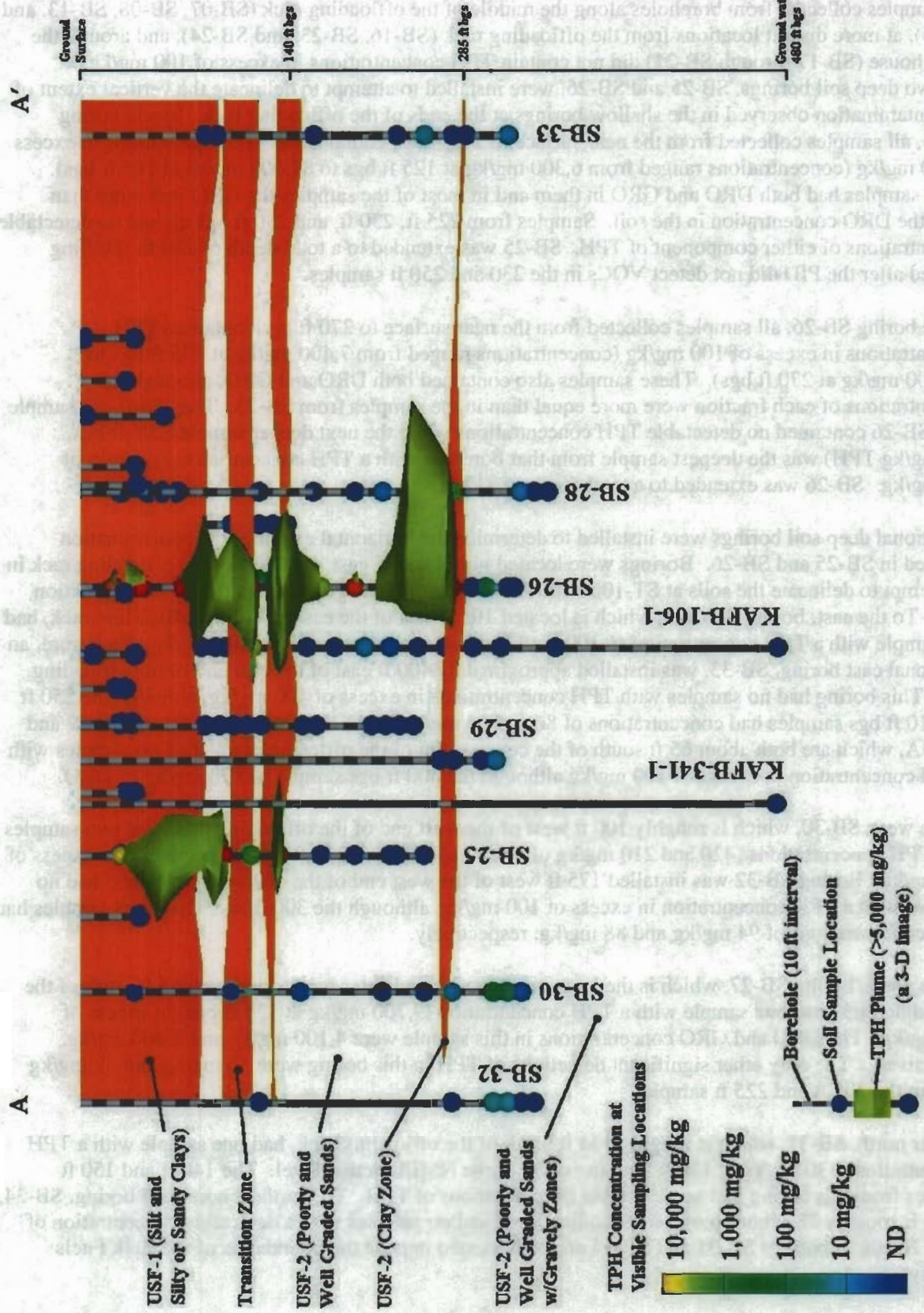

Figure 3 - 4. Geologic Cross Section and Estimated Extent of Subsurface Contamination

Iso-surface illustrates the Total Recoverable Petroleum Hydrocarbon (TPH) >5,000 mg/kg
View is horizontal from the south. No vertical exageration.

(40 ft bgs at SB-06) and concentrations generally increased with depth. Shallow subsurface (<41 ft bgs) soil samples collected from boreholes along the middle of the offloading rack (SB-07, SB-08, SB-13, and SB-14), at more distant locations from the offloading rack (SB-16, SB-23, and SB-24), and around the pump house (SB-17 through SB-21) did not contain TPH concentrations in excess of 100 mg/kg. The two deep soil borings, SB-25 and SB-26, were installed to attempt to delineate the vertical extent of the contamination observed in the shallow borings at the ends of the offloading rack. In soil boring SB-25, all samples collected from the near surface to 145 ft bgs contained TPH concentrations in excess of 100 mg/kg (concentrations ranged from 6,300 mg/kg at 125 ft bgs to 81,000 mg/kg at 105 ft bgs). These samples had both DRO and GRO in them and in most of the samples the GRO was more than twice the DRO concentration in the soil. Samples from 225 ft, 230 ft, and 250 ft bgs all had no detectable concentrations of either component of TPH. SB-25 was extended to a total depth of 250 ft. Drilling stopped after the PID did not detect VOCs in the 230 and 250 ft samples.

In soil boring SB-26, all samples collected from the near surface to 270 ft bgs contained TPH concentrations in excess of 100 mg/kg (concentrations ranged from 7,400 mg/kg at 175 ft bgs to 114,000 mg/kg at 270 ft bgs). These samples also contained both DRO and GRO, although the concentrations of each fraction were more equal than in the samples from SB-25. The 285-ft bgs sample from SB-26 contained no detectable TPH concentrations while the next deeper sample (295 ft bgs, 440 mg/kg TPH) was the deepest sample from that borehole with a TPH concentration in excess of 100 mg/kg. SB-26 was extended to a total depth of 315 ft.

Additional deep soil borings were installed to determine the horizontal extent of the contamination detected in SB-25 and SB-26. Borings were located north, south, east, and west of the offloading rack in an attempt to delineate the soils at ST-106 with TPH concentrations greater than the 100 mg/kg action level. To the east, boring SB-28A, which is located 105 ft east of the east end of the offloading rack, had one sample with a TPH concentration (6,100 mg/kg at 270 ft bgs) in excess of 100 mg/kg. Therefore, an additional east boring, SB-33, was installed approximately 400 ft east of the east end of the offloading rack. This boring had no samples with TPH concentrations in excess of 100 mg/kg, although the 250 ft and 310 ft bgs samples had concentrations of 86 and 65 mg/kg DRO. To the south, borings SB-29 and SB-29A, which are both about 65 ft south of the center point of the offloading rack, had no samples with a TPH concentration in excess of 100 mg/kg although the 300 ft bgs sample had 73 mg/kg of DRO.

To the west, SB-30, which is roughly 100 ft west of the west end of the offloading rack, had two samples with TPH concentrations (420 and 210 mg/kg of DRO at 305 ft and 310 ft bgs, respectively) in excess of 100 mg/kg. Boring SB-32 was installed 175 ft west of the west end of the offloading rack and had no samples with a TPH concentration in excess of 100 mg/kg, although the 300 ft and 310 ft bgs samples had DRO concentrations of 94 mg/kg and 88 mg/kg, respectively.

To the north, boring SB-27, which is the location of the groundwater monitoring well 65 ft north of the offloading rack, had one sample with a TPH concentration (9,700 mg/kg at 125 ft bgs) in excess of 100 mg/kg. The DRO and GRO concentrations in this sample were 4,100 mg/kg and 5,600 mg/kg, respectively. The only other significant detections of TPH in this boring were 56 mg/kg and 32 mg/kg DRO in the 205 ft and 225 ft samples.

Further north, SB-31, which is roughly 134 ft north of the offloading rack, had one sample with a TPH concentration (830 mg/kg at 130 ft bgs) in excess of the NMED action level. The 140 ft and 150 ft samples from this boring had no detectable concentrations of TPH. The furthest north soil boring, SB-34, which is roughly 280 ft north of the offloading rack, had no samples with a detectable concentration of TPH. Northern borings SB-31 and SB-34 are both located outside the boundaries of the Bulk Fuels Facility.

Table 3-2 Summary of Reportable Soil Sampling Results for the Soils Investigation at ST-106, Bulk Fuels Facility

Compound Class	Analyte	HHRB Screening Level [a] or Action Level (mg/kg)		Sample Number (Concentrations given in mg/kg)													
				ST-106 SB-01		ST-106 SB-02		ST-106 SB-03		ST-106 SB-04		ST-106 SB-05		ST-106 SB-06		ST-106 SB-07	
				40'	55'	4'	62'	4'	30'	4'	35'	8'	40'	20'	40'	35'	40'
Petroleum Hydrocarbons	DRO	100 Combined		ND [b]	ND	ND	ND	ND	ND	ND	ND	ND	**19,000**	**4,800**	**12,000**	ND	ND
	GRO			0.73	4.1	ND	3.5	ND	ND	ND	ND	0.46	**16,000**	**5,900**	**39,000**	1.5	0.66
		Actual	Adjusted [e]														
SVOCs	Dibenzofuran	230	23	ND	---[d]	---	ND	---	---	---	---	ND	---	---	1.4	---	---
	Benzo(b&k)fluoranthene	6.2 [g]	---	ND	---	---	ND	---	---	---	---	0.032	---	---	ND	---	---
	Chrysene	610	---	ND	---	---	ND	---	---	---	---	0.034	---	---	ND	---	---
	Fluorene	2100	210	ND	---	---	ND	---	---	---	---	ND	---	---	0.56	---	---
	Fluoranthene	2300	230	ND	---	---	ND	---	---	---	---	0.094	---	---	ND	---	---
	1-methylnaphthalene	NA [h]	NA	ND	---	---	ND	---	---	---	---	ND	---	---	36	---	---
	2-methylnaphthalene	NA	NA	ND	---	---	ND	---	---	---	---	ND	---	---	43	---	---
	Naphthalene	53	5.3	ND	---	---	ND	---	---	---	---	ND	---	---	**32**	---	---
	Phenanthrene	1,800	180	ND	---	---	ND	---	---	---	---	0.12	---	---	ND	---	---
	Diethylphthalate	49,000	4900	0.073	---	---	0.042	---	---	---	---	0.095	---	---	ND	---	---
	bis (2-Ethylhexyl)phthalate	350	---	ND	---	---	ND	---	---	---	---	ND	---	---	ND	---	---
	Di-n-Butylphthalate	6,100	610	1.3	---	---	0.63	---	---	---	---	1.5	---	---	ND	---	---
	n-Nitroso-diphenyl-amine	990	---	ND	---	---	ND	---	---	---	---	ND	---	---	ND	---	---
	n-Nitroso-dimethyl-amine	0.0950	---	ND	---	---	ND	---	---	---	---	ND	---	---	ND	---	---
VOCs	Benzene	6.40	---	ND	0.039	0.078	0.061	ND	ND	0.006	ND	ND	1.4	ND	**13**	0.043	ND
	Ethylbenzene	68	6.8	ND	ND	ND	ND	ND	ND	ND	ND	ND	**30**	**9.1**	**220**	ND	ND
	o-Xylene	63	6.3	ND	ND	ND	ND	ND	ND	ND	ND	ND	**45**	**29**	**180**	ND	ND
	p/m-Xylenes	63	6.3	ND	ND	ND	ND	ND	ND	ND	ND	ND	**130**	**68**	**470**	ND	ND
	Toluene	180	18	0.005	ND	0.038	ND	ND	ND	0.16	ND	ND	**79**	1.8	**360**	ND	ND
	1,2,4-Trimethylbenzene	52	5.2	ND	ND	ND	ND	ND	ND	ND	ND	ND	**130**	**79**	**220**	ND	ND
	1,3,5-Trimethylbenzene	21	2.1	ND	ND	ND	ND	ND	ND	ND	ND	ND	**42**	**25**	**72**	ND	ND
	1,2-Dibromoethane (EDB)	0.053	---	0.006	ND	ND	ND	ND	ND	ND	ND	ND	ND	ND	ND	ND	ND
	1,1,2,2 Tetrachloroethane	3.6	---	0.012	ND	ND	ND	ND	ND	ND	ND	ND	ND	ND	ND	ND	ND
	Chloromethane	12.0	---	ND	ND	0.028	ND	ND	ND	ND	ND	ND	ND	ND	ND	ND	ND
	2-Butanone (MEK)	37000	700	4.1	8.7	ND	0.61	ND	ND	ND	ND	ND	3.2	ND	ND	ND	ND
	2-Hexanone (MBK)	NA	NA	0.045	0.45	ND	ND	ND	ND	ND	ND	ND	ND	ND	ND	ND	ND
	4-Methyl-2-pentanone (MIBK)	760	76	0.075	0.14	ND	ND	ND	ND	ND	ND	ND	ND	ND	ND	ND	ND
	Acetone	1500	150	17	50	0.078	33	0.053	0.056	ND	0.070	0.12	25	ND	ND	0.062	ND
	Naphthalene	53	5.3	ND	ND	ND	ND	ND	ND	ND	ND	ND	**46**	**8.8**	**22**	ND	ND

Table 3-2 Continued. Summary of Reportable Soil Sampling Results for the Soils Investigation at ST-106, Bulk Fuels Facility

Compound Class	Analyte	HHRB Screening Level [a] or Action Level (mg/kg)		Sample Number (Concentrations given in mg/kg)												
				ST-106 SB-08		ST-106 SB-09		ST-106 SB-10		ST-106 SB-12	ST-106 SB-13		ST-106 SB-14		ST-106 SB-16	
				30'	38'	10'	40'	25'	40'	30'	20'	42'	35'	41'	25'	32'
Petroleum Hydrocarbons	DRO	100 Combined		ND	ND	ND	ND [d]	**12,000**	**19,000**	ND	65	ND	ND	ND	ND	ND
	GRO			ND	ND	ND	0.53	**16,000**	**30,000**	ND	1.1	0.37	0.40	ND	ND	ND
		Actual	Adjusted [c]													
SVOCs	Dibenzofuran	230	23	---	---	ND	---	---	ND	---	ND	---	---	---	---	---
	Benzo(b&k)fluoranthene	6.2 [g]	---	---	---	ND	---	---	ND	---	ND	---	---	---	---	---
	Chrysene	610	---	---	---	ND	---	---	ND	---	ND	---	---	---	---	---
	Fluorene	2100	210	---	---	ND	---	---	ND	---	ND	---	---	---	---	---
	Fluoranthene	2300	230	---	---	ND	---	---	ND	---	ND	---	---	---	---	---
	1-methylnaphthalene	NA [h]	NA	---	---	ND	---	---	130	---	ND	---	---	---	---	---
	2-methylnaphthalene	NA	NA	---	---	ND	---	---	170	---	ND	---	---	---	---	---
	Naphthalene	53	5.3	---	---	ND	---	---	**93**	---	ND	---	---	---	---	---
	Phenanthrene	1,800	180	---	---	ND	---	---	ND	---	ND	---	---	---	---	---
	Diethylphthalate	49,000	4900	---	---	0.066	---	---	ND	---	0.085	---	---	---	---	---
	bis (2-Ethylhexyl)phthalate	350	---	---	---	ND	---	---	ND	---	ND	---	---	---	---	---
	Di-n-Butylphthalate	6,100	610	---	---	1.1	---	---	ND	---	1.3	---	---	---	---	---
	n-Nitroso-diphenyl-amine	990	---	---	---	ND	---	---	ND	---	ND	---	---	---	---	---
	n-Nitroso-dimethyl-amine	0.0950	---	---	---	ND	---	---	ND	---	ND	---	---	---	---	---
VOCs	Benzene	6.40	---	ND	ND	ND	ND	2.8	1.7	ND	ND	ND	ND	ND	ND	ND
	Ethylbenzene	68	6.8	ND	ND	ND	ND	**37**	**37**	ND	ND	ND	ND	ND	ND	ND
	o-Xylene	63	6.3	ND	ND	ND	ND	**54**	**44**	ND	ND	ND	ND	ND	ND	ND
	p/m-Xylenes	63	6.3	ND	ND	ND	ND	**150**	**100**	ND	ND	ND	ND	ND	ND	ND
	Toluene	180	18	ND	ND	ND	ND	**40**	**38**	ND	ND	ND	ND	ND	ND	ND
	1,2,4-Trimethylbenzene	52	5.2	ND	ND	ND	ND	**140**	**330**	ND	ND	ND	ND	ND	ND	ND
	1,3,5-Trimethylbenzene	21	2.1	ND	ND	ND	ND	**46**	**79**	ND	ND	ND	ND	ND	ND	ND
	1,2-Dibromoethane (EDB)	0.053	---	ND	ND	ND	ND	ND	ND	ND	ND	ND	ND	ND	ND	ND
	1,1,2,2 Tetrachloroethane	3.6	---	ND	ND	ND	ND	ND	ND	ND	ND	ND	ND	ND	ND	ND
	Chloromethane	12.0	---	ND	ND	ND	ND	ND	ND	ND	ND	ND	ND	ND	ND	ND
	2-Butanone (MEK)	37000	700	ND	ND	ND	0.36	ND	ND	ND	0.028	ND	ND	ND	ND	ND
	2-Hexanone (MBK)	NA	NA	ND	ND	ND	ND	ND	ND	ND	ND	ND	ND	ND	ND	ND
	4-Methyl-2-pentanone (MIBK)	760	76	ND	ND	ND	ND	ND	ND	ND	ND	ND	ND	ND	ND	ND
	Acetone	1500	150	ND	ND	0.078	1.6	ND	14	ND	0.15	ND	ND	ND	ND	ND
	Naphthalene	53	5.3	ND	ND	ND	ND	**34**	**61**	ND	ND	ND	ND	ND	ND	ND

Table 3-2 Continued. Summary of Reportable Soil Sampling Results for the Soils Investigation at ST-106, Bulk Fuels Facility

Compound Class	Analyte	HHRB Screening Level [a] or Action Level (mg/kg)		Sample Number (Concentrations given in mg/kg)												
				ST-106 SB-17		ST-106 SB-18		ST-106 SB-19	ST-106 SB-20	ST-106 SB-21	ST-106 SB-22			ST-106 SB-23 42'	ST-106 SB-24	
				4'	40'	4'	59'	40'	40'	34'	15'	20'	32'	42'	28'	40'
Petroleum Hydrocarbons	DRO	100 Combined		ND	ND	ND	ND	ND	ND	ND	2,600	3,000	14,000	ND	ND	ND
	GRO			ND	ND	ND	ND	ND	ND	ND	1,200	2,300	20,000	ND	ND	ND
		Actual	Adjusted [c]													
SVOCs	Dibenzofuran	230	23	---	---	ND	---	---	---	---	---	---	0.98	---	---	---
	Benzo(b&k)fluoranthene	6.2 [g]	---	---	---	ND	---	---	---	---	---	---	ND	---	---	---
	Chrysene	610	---	---	---	ND	---	---	---	---	---	---	ND	---	---	---
	Fluorene	2100	210	---	---	ND	---	---	---	---	---	---	ND	---	---	---
	Fluoranthene	2300	230	---	---	ND	---	---	---	---	---	---	ND	---	---	---
	1-methylnaphthalene	NA [h]	NA	---	---	ND	---	---	---	---	---	---	24	---	---	---
	2-methylnaphthalene	NA	NA	---	---	ND	---	---	---	---	---	---	29	---	---	---
	Naphthalene	53	5.3	---	---	ND	---	---	---	---	---	---	22	---	---	---
	Phenanthrene	1,800	180	---	---	ND	---	---	---	---	---	---	ND	---	---	---
	Diethylphthalate	49,000	4900	---	---	0.072	---	---	---	---	---	---	ND	---	---	---
	bis (2-Ethylhexyl)phthalate	350	---	---	---	ND	---	---	---	---	---	---	ND	---	---	---
	Di-n-Butylphthalate	6,100	610	---	---	0.98	---	---	---	---	---	---	ND	---	---	---
	n-Nitroso-diphenyl-amine	990	---	---	---	ND	---	---	---	---	---	---	ND	---	---	---
	n-Nitroso-dimethyl-amine	0.0950	---	---	---	ND	---	---	---	---	---	---	ND	---	---	---
VOCs	Benzene	6.40	---	ND	ND	ND	ND	ND	ND	ND	17	ND	8.6	0.063	ND	ND
	Ethylbenzene	68	6.8	ND	ND	ND	ND	ND	ND	ND	3.5	13	160	ND	ND	ND
	o-Xylene	63	6.3	ND	ND	ND	ND	ND	ND	ND	38	25	140	ND	ND	ND
	p/m-Xylenes	63	6.3	ND	ND	ND	ND	ND	ND	ND	32	47	380	ND	ND	ND
	Toluene	180	18	ND	ND	ND	ND	ND	ND	ND	5.7	6.0	300	ND	ND	0.006
	1,2,4-Trimethylbenzene	52	5.2	ND	ND	ND	ND	---	---	---	38	44	180	ND	ND	ND
	1,3,5-Trimethylbenzene	21	2.1	ND	ND	ND	ND	---	---	---	67	14	61	ND	ND	ND
	1,2-Dibromoethane (EDB)	0.053	---	ND	ND	ND	ND	---	---	---	ND	ND	ND	ND	ND	ND
	1,1,2,2 Tetrachloroethane	3.6	---	ND	ND	ND	ND	---	---	---	ND	ND	ND	ND	ND	ND
	Chloromethane	12.0	---	ND	ND	ND	ND	---	---	---	27	ND	ND	ND	ND	ND
	2-Butanone (MEK)	37000	700	ND	ND	ND	ND	---	---	---	ND	ND	ND	ND	ND	ND
	2-Hexanone (MBK)	NA	NA	ND	ND	ND	ND	---	---	---	ND	ND	ND	ND	ND	ND
	4-Methyl-2-pentanone (MIBK)	760	76	ND	ND	ND	ND	---	---	---	ND	ND	ND	ND	ND	ND
	Acetone	1500	150	0.053	0.072	ND	ND	---	---	---	ND	ND	ND	ND	0.098	0.11
	Naphthalene	53	5.3	ND	ND	ND	ND	---	---	---	8.3	ND	ND	ND	ND	ND

Table 3-2 Continued. Summary of Reportable Soil Sampling Results for the Soils Investigation at ST-106, Bulk Fuels Facility

Compound Class	Analyte	HHRB Screening Level [a] or Action Level (mg/kg)		Sample Number (Concentrations given in mg/kg) ST-106 SB-25									
				50'	80'	105'	125'	145'	175'	200'	225'	230'	250'
Petroleum Hydrocarbons	DRO	100 Combined		**7,700**	**8,000**	**29,000**	**2,200**	**12,000**	ND [b]	ND	ND	ND	ND
	GRO			**45,000**	**7,200**	**52,000**	**4,100**	**45,000**	0.41	0.25	ND	ND	ND
		Actual	Adjusted [c]										
SVOCs	Dibenzofuran	230	23	---[d]	---	4.7	---	---	ND	---	---	---	ND
	Benzo(b&k)fluoranthene	6.2 [g]	---	---	---	ND	---	---	ND	---	---	---	ND
	Chrysene	610	---	---	---	ND	---	---	ND	---	---	---	ND
	Fluorene	2100	210	---	---	ND	---	---	ND	---	---	---	ND
	Fluoranthene	2300	230	---	---	ND	---	---	ND	---	---	---	ND
	1-methylnaphthalene	NA [h]	NA	---	---	170	---	---	ND	---	---	---	ND
	2-methylnaphthalene	NA	NA	---	---	180	---	---	ND	---	---	---	ND
	Naphthalene	53	5.3	---	---	**120**	---	---	ND	---	---	---	ND
	Phenanthrene	1,800	180	---	---	ND	---	---	ND	---	---	---	ND
	Diethylphthalate	49,000	4900	---	---	ND	---	---	ND	---	---	---	ND
	bis (2-Ethylhexyl)phthalate	350	---	---	---	ND	---	---	ND	---	---	---	ND
	Di-n-Butylphthalate	6,100	610	---	---	ND	---	---	ND	---	---	---	ND
	n-Nitroso-diphenyl-amine	990	---	---	---	ND	---	---	ND	---	---	---	ND
	n-Nitroso-dimethyl-amine	0.0950	---	---	---	ND	---	---	ND	---	---	---	ND
VOCs	Benzene	6.40	---	**14**	**9.8**	5.6	2.2	ND	ND	ND	ND	ND	ND
	Ethylbenzene	68	6.8	**180**	**57**	**62**	4.2	**32**	ND	ND	ND	ND	ND
	o-Xylene	63	6.3	**190**	**55**	**38**	**12**	**69**	ND	ND	ND	ND	ND
	p/m-Xylenes	63	6.3	**610**	**150**	**85**	**38**	**120**	ND	ND	ND	ND	ND
	Toluene	180	18	**220**	**110**	**47**	**25**	**84**	ND	ND	ND	ND	ND
	1,2,4-Trimethylbenzene	52	5.2	---	**74**	**130**	**8.3**	---	ND	---	ND	---	ND
	1,3,5-Trimethylbenzene	21	2.1	---	**24**	**42**	**6.0**	---	ND	---	ND	---	ND
	1,2-Dibromoethane (EDB)	0.053	---	---	ND	ND	ND	---	ND	---	ND	---	ND
	1,1,2,2 Tetrachloroethane	3.6	---	---	ND	ND	ND	---	ND	---	ND	---	ND
	Chloromethane	12.0	---	---	ND	ND	ND	---	ND	---	ND	---	ND
	2-Butanone (MEK)	37000	700	---	3.2	ND	13	---	0.19	---	ND	---	ND
	2-Hexanone (MBK)	NA	NA	---	ND	ND	ND	---	0.032	---	ND	---	ND
	4-Methyl-2-pentanone (MIBK)	760	76	---	ND	ND	ND	---	ND	---	ND	---	ND
	Acetone	1500	150	---	7.1	ND	27	---	0.64	---	0.064	---	ND
	Naphthalene	53	5.3	---	**7.5**	**68**	ND	---	ND	---	ND	---	ND

Table 3-2 Continued. Summary of Reportable Soil Sampling Results for the Soils Investigation at ST-106, Bulk Fuels Facility

Compound Class	Analyte	HHRB Screening Level [a] or Action Level (mg/kg)		Sample Number (Concentrations given in mg/kg) ST-106 SB-26													
				45'	75'	100'	125'	150'	175'	175' Dup	200'	200' Dup	270'	285'	295'	310'	315'
Petroleum Hydrocarbons	DRO	100 Combined		23,000	31,000	22,000	27,000	5,500	4,300	3,300	17,000	15,000	24,000	ND	230	ND	ND
	GRO			21,000	25,000	24,000	25,000	16,000	3,100	5,000	14,000	14,000	90,000	ND	210	0.54	ND
		Actual	Adjusted [c]														
SVOCs	Dibenzofuran	230	23	---	---	1.6	---	---	---	---	ND	ND	---	---	---	---	---
	Benzo(b&k)fluoranthene	6.2 [g]	---	---	---	ND	---	---	---	---	ND	ND	---	---	---	---	---
	Chrysene	610	---	---	---	ND	---	---	---	---	ND	ND	---	---	---	---	---
	Fluorene	2100	210	---	---	ND	---	---	---	---	ND	ND	---	---	---	---	---
	Fluoranthene	2300	230	---	---	ND	---	---	---	---	ND	ND	---	---	---	---	---
	1-methylnaphthalene	NA [h]	NA	---	---	130	---	---	---	---	66	66	---	---	---	---	---
	2-methylnaphthalene	NA	NA	---	---	ND	---	---	---	---	91	92	---	---	---	---	---
	Naphthalene	53	5.3	---	---	100	---	---	---	---	52	52	---	---	---	---	---
	Phenanthrene	1,800	180	---	---	ND	---	---	---	---	ND	ND	---	---	--	---	---
	Diethylphthalate	49,000	4900	---	---	ND	---	---	---	---	ND	ND	---	---	---	---	---
	bis (2-Ethylhexyl)phthalate	350	---	---	---	ND	---	---	---	---	ND	ND	---	---	---	---	---
	Di-n-Butylphthalate	6,100	610	---	---	ND	---	---	---	---	ND	ND	---	---	---	---	---
	n-Nitroso-diphenyl-amine	990	---	---	---	ND	---	---	---	---	ND	ND	---	---	---	---	---
	n-Nitroso-dimethyl-amine	0.0950	---	---	---	ND	---	---	---	---	15	ND	---	---	---	---	---
VOCs	Benzene	6.40	---	ND	ND	ND	6.4	21	ND	ND	19	13	630	ND	ND	ND	ND
	Ethylbenzene	68	6.8	22	42	28	58	45	2.0	33	35	31	930	ND	0.77	ND	ND
	o-Xylene	63	6.3	22	44	32	51	55	5.0	48	45	39	640	ND	1.1	ND	ND
	p/m-Xylenes	63	6.3	46	120	70	ND	160	12	160	130	110	1,900	ND	3.9	ND	ND
	Toluene	180	18	14	19	35	34	150	0.49	28	130	100	3,600	ND	ND	ND	ND
	1,2,4-Trimethylbenzene	52	5.2	150	---	190	---	81	---	---	130	120	560	---	---	---	---
	1,3,5-Trimethylbenzene	21	2.1	37	---	49	---	28	---	---	38	33	220	---	---	---	---
	1,2-Dibromoethane (EDB)	0.053	---	ND	---	ND	---	ND	---	---	ND	ND	ND	---	---	---	---
	1,1,2,2 Tetrachloroethane	3.6	---	ND	---	ND	---	ND	---	---	ND	ND	ND	---	---	---	---
	Chloromethane	12.0	---	ND	---	ND	---	ND	---	---	ND	ND	ND	---	---	---	---
	2-Butanone (MEK)	37000	700	ND	---	ND	---	ND	---	---	ND	ND	ND	---	---	---	---
	2-Hexanone (MBK)	NA	NA	ND	---	ND	---	ND	---	---	ND	ND	ND	---	---	---	---
	4-Methyl-2-pentanone (MIBK)	760	76	ND	---	ND	---	ND	---	---	ND	ND	ND	---	---	---	---
	Acetone	1500	150	ND	---	ND	---	120	---	---	120	170	380	---	---	---	---
	Naphthalene	53	5.3	59	---	78	---	ND	---	---	43	36	72	---	---	---	---

Table 3-2 Continued. Summary of Reportable Soil Sampling Results for the Soils Investigation at ST-106, Bulk Fuels Facility

Compound Class	Analyte	HHRB Screening Level [a] or Action Level (mg/kg)		Sample Number (Concentrations given in mg/kg) ST-106 SB-27																						
				5'	15'	25'	35'	45'	55'	65'	75'	85'	95'	105'	125'	145'	165'	185'	205'	225'	245'	265'	285'	305'	345'	505'
Petroleum Hydrocarbons	DRO	100 Combined		ND	ND	ND	ND	ND	ND	ND	ND	ND	ND	ND	**4,100**	ND	ND	ND	56	32	ND	ND	ND	ND	ND	ND
	GRO			ND	ND	ND	ND	ND	ND	ND	0.31	ND	1.2	0.72	**5,600**	ND	ND	0.49	0.64	1.1	0.4	ND	ND	ND	ND	ND
		Actual	Adjusted [c]																							
SVOCs	Dibenzofuran	230	23	---	---	---	---	---	---	ND	---	---	---	---	---	ND	---	---	---	---	---	ND	ND	---	---	---
	Benzo(b&k)fluoranthene	6.2 [g]	---	---	---	---	---	---	---	ND	---	---	---	---	---	ND	---	---	---	---	---	ND	ND	---	---	---
	Chrysene	610	---	---	---	---	---	---	---	ND	---	---	---	---	---	ND	---	---	---	---	---	ND	ND	---	---	---
	Fluorene	2100	210	---	---	---	---	---	---	ND	---	---	---	---	---	ND	---	---	---	---	---	ND	ND	---	---	---
	Fluoranthene	2300	230	---	---	---	---	---	---	ND	---	---	---	---	---	ND	---	---	---	---	---	ND	ND	---	---	---
	1-methylnaphthalene	NA [h]	NA	---	---	---	---	---	---	ND	---	---	---	---	---	ND	---	---	---	---	---	ND	ND	---	---	---
	2-methylnaphthalene	NA	NA	---	---	---	---	---	---	ND	---	---	---	---	---	ND	---	---	---	---	---	ND	ND	---	---	---
	Naphthalene	53	5.3	---	---	---	---	---	---	ND	---	---	---	---	---	ND	---	---	---	---	---	ND	ND	---	---	---
	Phenanthrene	1,800	180	---	---	---	---	---	---	ND	---	---	---	---	---	ND	---	---	---	---	---	ND	ND	---	---	---
	Diethylphthalate	49,000	4900	---	---	---	---	---	---	ND	---	---	---	---	---	ND	---	---	---	---	---	ND	ND	---	---	---
	bis (2-Ethylhexyl)phthalate	350	---	---	---	---	---	---	---	ND	---	---	---	---	---	ND	---	---	---	---	---	ND	ND	---	---	---
	Di-n-Butylphthalate	6,100	610	---	---	---	---	---	---	ND	---	---	---	---	---	ND	---	---	---	---	---	ND	ND	---	---	---
	n-Nitroso-diphenyl-amine	990	---	---	---	---	---	---	---	ND	---	---	---	---	---	ND	---	---	---	---	---	ND	ND	---	---	---
	n-Nitroso-dimethyl-amine	0.0950	---	---	---	---	---	---	---	ND	---	---	---	---	---	ND	---	---	---	---	---	ND	ND	---	---	---
VOCs	Benzene	6.40	---	---	---	---	ND	ND	---	ND	---	---	---	---	**85**	---	ND	ND	ND	ND	ND	ND	ND	ND	ND	---
	Ethylbenzene	68	6.8	---	---	---	ND	ND	---	ND	---	---	---	---	**150**	---	ND	ND	ND	ND	ND	ND	ND	ND	ND	---
	o-Xylene	63	6.3	---	---	---	ND	ND	---	ND	---	---	---	---	**110**	---	ND	ND	ND	ND	ND	ND	ND	ND	ND	---
	p/m-Xylenes	63	6.3	---	---	---	ND	ND	---	ND	---	---	---	---	**340**	---	ND	ND	ND	ND	ND	ND	ND	ND	ND	---
	Toluene	180	18	---	---	---	ND	ND	---	ND	---	---	---	---	**810**	---	ND	ND	ND	ND	ND	ND	ND	ND	0.007	---
	1,2,4-Trimethylbenzene	52	5.2	---	---	---	---	---	---	ND	---	---	---	---	**74**	---	---	---	---	---	ND	ND	ND	---	---	---
	1,3,5-Trimethylbenzene	21	2.1	---	---	---	---	---	---	ND	---	---	---	---	**32**	---	---	---	---	---	ND	ND	ND	---	---	---
	1,2-Dibromoethane (EDB)	0.053	---	---	---	---	---	---	---	ND	---	---	---	---	**7.0**	---	---	---	---	---	ND	ND	ND	---	---	---
	1,1,2,2 Tetrachloroethane	3.6	---	---	---	---	---	---	---	ND	---	---	---	---	ND	---	---	---	---	---	ND	ND	ND	---	---	---
	Chloromethane	12.0	---	---	---	---	---	---	---	ND	---	---	---	---	ND	---	---	---	---	---	ND	ND	ND	---	---	---
	2-Butanone (MEK)	37000	700	---	---	---	---	---	---	ND	---	---	---	---	ND	---	---	---	---	---	1.2	ND	ND	---	---	---
	2-Hexanone (MBK)	NA	NA	---	---	---	---	---	---	ND	---	---	---	---	ND	---	---	---	---	---	0.046	ND	ND	---	---	---
	4-Methyl-2-pentanone (MIBK)	760	76	---	---	---	---	---	---	ND	---	---	---	---	ND	---	---	---	---	---	0.030	ND	ND	---	---	---
	Acetone	1500	150	---	---	---	---	---	---	ND	---	---	---	---	28	---	---	---	---	---	2.4	0.13	ND	---	---	---
	Naphthalene	53	5.3	---	---	---	---	---	---	ND	---	---	---	---	**18**	---	---	---	---	---	ND	ND	ND	---	---	---

Table 3-2 Continued. Summary of Reportable Soil Sampling Results for the Soils Investigation at ST-106, Bulk Fuels Facility

Compound Class	Analyte	HHRB Screening Level [a] or Action Level (mg/kg)		Sample Number (Concentrations given in mg/kg) ST-106 SB28															
				30'	50'	60'	70'	80'	100'	110'	130'	170'	200'	220	250'	270'	320'	330'	340'
Petroleum Hydrocarbons	DRO	100 Combined		ND	ND	ND	ND	ND	ND	ND	ND	ND	ND	43	ND	**1,700**	59	ND	ND
	GRO			ND	ND	ND	ND	ND	ND	ND	ND	ND	ND	0.43	ND	**4,400**	ND	ND	ND
		Actual	Adjusted [c]																
SVOCs	Dibenzofuran	230	23	---	---	---	---	---	---	---	---	---	---	---	---	ND	ND	---	---
	Benzo(b&k)fluoranthene	6.2 [g]	---	---	---	---	---	---	---	---	---	---	---	---	---	ND	ND	---	---
	Chrysene	610	---	---	---	---	---	---	---	---	---	---	---	---	---	ND	ND	---	---
	Fluorene	2100	210	---	---	---	---	---	---	---	---	---	---	---	---	ND	ND	---	---
	Fluoranthene	2300	230	---	---	---	---	---	---	---	---	---	---	---	---	ND	ND	---	---
	1-methylnaphthalene	NA [h]	NA	---	---	---	---	---	---	---	---	---	---	---	---	0.16	ND	---	---
	2-methylnaphthalene	NA	NA	---	---	---	---	---	---	---	---	---	---	---	---	0.18	ND	---	---
	Naphthalene	53	5.3	---	---	---	---	---	---	---	---	---	---	---	---	0.044	ND	---	---
	Phenanthrene	1,800	180	---	---	---	---	---	---	---	---	---	---	---	---	ND	ND	---	---
	Diethylphthalate	49,000	4900	---	---	---	---	---	---	---	---	---	---	---	---	ND	ND	---	---
	bis (2-Ethylhexyl)phthalate	350	---	---	---	---	---	---	---	---	---	---	---	---	---	ND	ND	---	---
	Di-n-Butylphthalate	6,100	610	---	---	---	---	---	---	---	---	---	---	---	---	ND	ND	---	---
	n-Nitroso-diphenyl-amine	990	---	---	---	---	---	---	---	---	---	---	---	---	---	ND	ND	---	---
	n-Nitroso-dimethyl-amine	0.0950	---	---	---	---	---	---	---	---	---	---	---	---	---	ND	ND	---	---
VOCs	Benzene	6.40	---	---	---	---	---	---	0.018	ND	---	ND	---	---	---	0.64	ND	ND	---
	Ethylbenzene	68	6.8	---	---	---	---	---	ND	ND	---	ND	---	---	---	0.48	ND	ND	---
	o-Xylene	63	6.3	---	---	---	---	---	ND	ND	---	ND	---	---	---	0.28	ND	ND	---
	p/m-Xylenes	63	6.3	---	---	---	---	---	ND	ND	---	ND	---	---	---	0.74	ND	ND	---
	Toluene	180	18	---	---	---	---	---	0.035	ND	---	ND	---	---	---	2.2	ND	0.008	---
	1,2,4-Trimethylbenzene	52	5.2	---	---	---	---	---	ND	ND	---	---	---	---	---	0.27	ND	---	---
	1,3,5-Trimethylbenzene	21	2.1	---	---	---	---	---	ND	ND	---	---	---	---	---	0.098	ND	---	---
	1,2-Dibromoethane (EDB)	0.053	---	---	---	---	---	---	0.026	ND	---	---	---	---	---	**0.12**	ND	---	---
	1,1,2,2 Tetrachloroethane	3.6	---	---	---	---	---	---	ND	ND	---	---	---	---	---	ND	ND	---	---
	Chloromethane	12.0	---	---	---	---	---	---	ND	ND	---	---	---	---	---	ND	ND	---	---
	2-Butanone (MEK)	37000	700	---	---	---	---	---	0.24	ND	---	---	---	---	---	0.85	ND	---	---
	2-Hexanone (MBK)	NA	NA	---	---	---	---	---	ND	ND	---	---	---	---	---	ND	ND	---	---
	4-Methyl-2-pentanone (MIBK)	760	76	---	---	---	---	---	ND	ND	---	---	---	---	---	ND	ND	---	---
	Acetone	1500	150	---	---	---	---	---	1.8	0.17	---	---	---	---	---	4.2	ND	---	---
	Naphthalene	53	5.3	---	---	---	---	---	ND	ND	---	---	---	---	---	ND	ND	---	---

Table 3-2 Continued. Summary of Reportable Soil Sampling Results for the Soils Investigation at ST-106, Bulk Fuels Facility

Compound Class	Analyte	HHRB Screening Level [a] or Action Level (mg/kg)		Sample Number (Concentrations given in mg/kg) ST-106 SB-29														
				90'	100'	110'	120'	130'	160'	170'	210'	220'	230'	240'	260'	270'	290'	300'
Petroleum Hydrocarbons	DRO	100 Combined		ND	ND	ND	ND	ND	ND	ND	ND	ND	ND	ND	ND	ND	ND	73
	GRO			ND	ND	ND	ND	ND	ND	ND	ND	ND	0.29	ND	0.50	ND	ND	ND
		Actual	Adjusted [e]															
SVOCs	Dibenzofuran	230	23	---	---	ND	---	---	---	---	---	---	---	---	---	---	---	---
	Benzo(b&k)fluoranthene	6.2 [g]	---	---	---	ND	---	---	---	---	---	---	---	---	---	---	---	---
	Chrysene	610	---	---	---	ND	---	---	---	---	---	---	---	---	---	---	---	---
	Fluorene	2100	210	---	---	ND	---	---	---	---	---	---	---	---	---	---	---	---
	Fluoranthene	2300	230	---	---	ND	---	---	---	---	---	---	---	---	---	---	---	---
	1-methylnaphthalene	NA [h]	NA	---	---	ND	---	---	---	---	---	---	---	---	---	---	---	---
	2-methylnaphthalene	NA	NA	---	---	ND	---	---	---	---	---	---	---	---	---	---	---	---
	Naphthalene	53	5.3	---	---	ND	---	---	---	---	---	---	---	---	---	---	---	---
	Phenanthrene	1,800	180	---	---	ND	---	---	---	---	---	---	---	---	---	---	---	---
	Diethylphthalate	49,000	4900	---	---	ND	---	---	---	---	---	---	---	---	---	---	---	---
	bis (2-Ethylhexyl)phthalate	350	---	---	---	ND	---	---	---	---	---	---	---	---	---	---	---	---
	Di-n-Butylphthalate	6,100	610	---	---	ND	---	---	---	---	---	---	---	---	---	---	---	---
	n-Nitroso-diphenyl-amine	990	---	---	---	ND	---	---	---	---	---	---	---	---	---	---	---	---
	n-Nitroso-dimethyl-amine	0.0950	---	---	---	ND	---	---	---	---	---	---	---	---	---	---	---	---
VOCs	Benzene	6.40	---	---	---	ND	---	---	ND	ND	---	ND	---	ND	ND	---	ND	---
	Ethylbenzene	68	6.8	---	---	ND	---	---	ND	ND	---	ND	---	ND	ND	---	ND	---
	o-Xylene	63	6.3	---	---	ND	---	---	ND	ND	---	ND	---	ND	ND	---	ND	---
	p/m-Xylenes	63	6.3	---	---	ND	---	---	ND	ND	---	ND	---	ND	ND	---	ND	---
	Toluene	180	18	---	---	ND	---	---	ND	ND	---	ND	---	ND	ND	---	ND	---
	1,2,4-Trimethylbenzene	52	5.2	---	---	ND	---	---	---	ND	---	---	---	---	ND	---	---	---
	1,3,5-Trimethylbenzene	21	2.1	---	---	ND	---	---	---	ND	---	---	---	---	ND	---	---	---
	1,2-Dibromoethane (EDB)	0.053	---	---	---	ND	---	---	---	ND	---	---	---	---	ND	---	---	---
	1,1,2,2 Tetrachloroethane	3.6	---	---	---	ND	---	---	---	ND	---	---	---	---	ND	---	---	---
	Chloromethane	12.0	---	---	---	ND	---	---	---	ND	---	---	---	---	ND	---	---	---
	2-Butanone (MEK)	37000	700	---	---	0.030	---	---	---	ND	---	---	---	---	0.058	---	---	---
	2-Hexanone (MBK)	NA	NA	---	---	ND	---	---	---	ND	---	---	---	---	ND	---	---	---
	4-Methyl-2-pentanone (MIBK)	760	76	---	---	ND	---	---	---	ND	---	---	---	---	ND	---	---	---
	Acetone	1500	150	---	---	0.34	---	---	---	0.068	---	---	---	---	0.59	---	---	---
	Naphthalene	53	5.3	---	---	ND	---	---	---	ND	---	---	---	---	ND	---	---	---

Table 3-2 Continued. Summary of Reportable Soil Sampling Results for the Soils Investigation at ST-106, Bulk Fuels Facility

Compound Class	Analyte	HHRB Screening Level [a] or Action Level (mg/kg)		Sample Number (Concentrations given in mg/kg)															
				ST-106 SB-30											ST-106 SB-31				
				40'	110'	160'	220'	250'	270'	305'	310'	320'	325'	330'	70'	120"	130'	140'	150'
Petroleum Hydrocarbons	DRO	100 Combined		ND	ND	31	ND	ND	63	420	210	35	ND	ND	ND	ND	830	ND	ND
	GRO			ND	ND	ND	ND	0.84	ND	ND	ND	ND	ND	ND	ND	ND	ND	ND	ND
		Actual	Adjusted [c]																
SVOCs	Dibenzofuran	230	23	---	---	---	ND	---	ND	---	---	---	---	---	---	---	ND	---	---
	Benzo(b&k)fluoranthene	6.2 [g]	---	---	---	---	ND	---	ND	---	---	---	---	---	---	---	ND	---	---
	Chrysene	610	---	---	---	---	ND	---	ND	---	---	---	---	---	---	---	ND	---	---
	Fluorene	2100	210	---	---	---	ND	---	ND	---	---	---	---	---	---	---	ND	---	---
	Fluoranthene	2300	230	---	---	---	ND	---	ND	---	---	---	---	---	---	---	ND	---	---
	1-methylnaphthalene	NA [h]	NA	---	---	---	ND	---	ND	---	---	---	---	---	---	---	ND	---	---
	2-methylnaphthalene	NA	NA	---	---	---	ND	---	ND	---	---	---	---	---	---	---	ND	---	---
	Naphthalene	53	5.3	---	---	---	ND	---	ND	---	---	---	---	---	---	---	ND	---	---
	Phenanthrene	1,800	180	---	---	---	ND	---	ND	---	---	---	---	---	---	---	ND	---	---
	Diethylphthalate	49,000	4900	---	---	---	ND	---	ND	---	---	---	---	---	---	---	ND	---	---
	bis (2-Ethylhexyl)phthalate	350	---	---	---	---	ND	---	0.40	---	---	---	---	---	---	---	1.6	---	---
	Di-n-Butylphthalate	6,100	610	---	---	---	ND	---	ND	---	---	---	---	---	---	---	ND	---	---
	n-Nitroso-diphenyl-amine	990	---	---	---	---	ND	---	ND	---	---	---	---	---	---	---	0.075	---	---
	n-Nitroso-dimethyl-amine	0.0950	---	---	---	---	ND	---	ND	---	---	---	---	---	---	---	ND	---	---
VOCs	Benzene	6.40	---	---	ND	---	ND	ND	ND	ND	---	---	---	---	ND	ND	ND	ND	---
	Ethylbenzene	68	6.8	---	ND	---	ND	ND	ND	ND	---	---	---	---	ND	ND	ND	ND	---
	o-Xylene	63	6.3	---	ND	---	ND	ND	ND	ND	---	---	---	---	ND	ND	ND	ND	---
	p/m-Xylenes	63	6.3	---	ND	---	ND	ND	ND	ND	---	---	---	---	ND	ND	ND	ND	---
	Toluene	180	18	---	ND	---	ND	ND	ND	ND	---	---	---	---	ND	ND	ND	ND	---
	1,2,4-Trimethylbenzene	52	5.2	---	ND	---	ND	---	ND	---	---	---	---	---	ND	ND	ND	ND	---
	1,3,5-Trimethylbenzene	21	2.1	---	ND	---	ND	---	ND	---	---	---	---	---	ND	ND	ND	ND	---
	1,2-Dibromoethane (EDB)	0.053	---	---	ND	---	ND	---	ND	---	---	---	---	---	ND	ND	ND	ND	---
	1,1,2,2 Tetrachloroethane	3.6	---	---	ND	---	ND	---	ND	---	---	---	---	---	ND	ND	ND	ND	---
	Chloromethane	12.0	---	---	ND	---	ND	---	ND	---	---	---	---	---	ND	ND	ND	ND	---
	2-Butanone (MEK)	37000	700	---	ND	---	ND	---	ND	---	---	---	---	---	ND	ND	ND	ND	---
	2-Hexanone (MBK)	NA	NA	---	ND	---	ND	---	ND	---	---	---	---	---	ND	ND	ND	ND	---
	4-Methyl-2-pentanone (MIBK)	760	76	---	ND	---	ND	---	ND	---	---	---	---	---	ND	ND	ND	ND	---
	Acetone	1500	150	---	ND	---	ND	---	ND	---	---	---	---	---	ND	0.12	ND	ND	---
	Naphthalene	53	5.3	---	ND	---	ND	---	ND	---	---	---	---	---	ND	ND	ND	ND	---

Table 3-2 Continued. Summary of Reportable Soil Sampling Results for the Soils Investigation at ST-106, Bulk Fuels Facility

Compound Class	Analyte	HHRB Screening Level [a] or Action Level (mg/kg)		Sample Number (Concentrations given in mg/kg)																	
				ST-106 SB-32						ST-106 SB-33								ST-106 SB-34			
				130'	270'	300'	310'	320'	330'	90'	100'	170'	230'	250'	270'	280'	310'	110'	130'	140'	150'
Petroleum Hydrocarbons	DRO	100 Combined		ND	ND	94	88	ND	ND	ND	ND	ND	ND	86	ND	ND	65	ND	ND	ND	ND
	GRO			ND	ND	ND	ND	ND	ND	ND	ND	ND	1.5	ND	ND	ND	ND	ND	ND	ND	ND
		Actual	Adjusted [e]																		
SVOCs	Dibenzofuran	230	23	---	---	---	---	---	ND	---	---	---	---	---	---	---	---	---	---	---	---
	Benzo(b&k)fluoranthene	6.2 [g]	---	---	---	---	---	---	ND	---	---	---	---	---	---	---	---	---	---	---	---
	Chrysene	610	---	---	---	---	---	---	ND	---	---	---	---	---	---	---	---	---	---	---	---
	Fluorene	2100	210	---	---	---	---	---	ND	---	---	---	---	---	---	---	---	---	---	---	---
	Fluoranthene	2300	230	---	---	---	---	---	ND	---	---	---	---	---	---	---	---	---	---	---	---
	1-methylnaphthalene	NA [h]	NA	---	---	---	---	---	ND	---	---	---	---	---	---	---	---	---	---	---	---
	2-methylnaphthalene	NA	NA	---	---	---	---	---	ND	---	---	---	---	---	---	---	---	---	---	---	---
	Naphthalene	53	5.3	---	---	---	---	---	ND	---	---	---	---	---	---	---	---	---	---	---	---
	Phenanthrene	1,800	180	---	---	---	---	---	ND	---	---	---	---	---	---	---	---	---	---	---	---
	Diethylphthalate	49,000	4900	---	---	---	---	---	ND	---	---	---	---	---	---	---	---	---	---	---	---
	bis (2-Ethylhexyl)phthalate	350	---	---	---	---	---	---	ND	---	---	---	---	---	---	---	---	---	---	---	---
	Di-n-Butylphthalate	6,100	610	---	---	---	---	---	ND	---	---	---	---	---	---	---	---	---	---	---	---
	n-Nitroso-diphenyl-amine	990	---	---	---	---	---	---	ND	---	---	---	---	---	---	---	---	---	---	---	---
	n-Nitroso-dimethyl-amine	0.0950	---	---	---	---	---	---	ND	---	---	---	---	---	---	---	---	---	---	---	---
VOCs	Benzene	6.40	---	---	---	---	ND	---	ND	---	---	---	ND	ND	ND	ND	---	---	ND	---	---
	Ethylbenzene	68	6.8	---	---	---	ND	---	ND	---	---	---	ND	ND	ND	ND	---	---	ND	---	---
	o-Xylene	63	6.3	---	---	---	ND	---	ND	---	---	---	ND	ND	ND	ND	---	---	ND	---	---
	p/m-Xylenes	63	6.3	---	---	---	ND	---	ND	---	---	---	ND	ND	ND	ND	---	---	ND	---	---
	Toluene	180	18	---	---	---	ND	---	ND	---	---	---	ND	ND	ND	ND	---	---	ND	---	---
	1,2,4-Trimethylbenzene	52	5.2	---	---	---	ND	---	ND	---	---	---	ND	ND	ND	ND	---	---	ND	---	---
	1,3,5-Trimethylbenzene	21	2.1	---	---	---	ND	---	ND	---	---	---	ND	ND	ND	ND	---	---	ND	---	---
	1,2-Dibromoethane (EDB)	0.053	---	---	---	---	ND	---	ND	---	---	---	ND	ND	ND	ND	---	---	ND	---	---
	1,1,2,2 Tetrachloroethane	3.6	---	---	---	---	ND	---	ND	---	---	---	ND	ND	ND	ND	---	---	ND	---	---
	Chloromethane	12.0	---	---	---	---	ND	---	ND	---	---	---	ND	ND	ND	ND	---	---	ND	---	---
	2-Butanone (MEK)	37000	700	---	---	---	ND	---	ND	---	---	---	ND	ND	ND	ND	---	---	ND	---	---
	2-Hexanone (MBK)	NA	NA	---	---	---	ND	---	ND	---	---	---	ND	ND	ND	ND	---	---	ND	---	---
	4-Methyl-2-pentanone (MIBK)	760	76	---	---	---	ND	---	ND	---	---	---	ND	ND	ND	ND	---	---	ND	---	---
	Acetone	1500	150	---	---	---	ND	---	ND	---	---	---	ND	0.16	ND	0.091	---	---	ND	---	---
	Naphthalene	53	5.3	---	---	---	ND	---	ND	---	---	---	ND	ND	ND	ND	---	---	ND	---	---

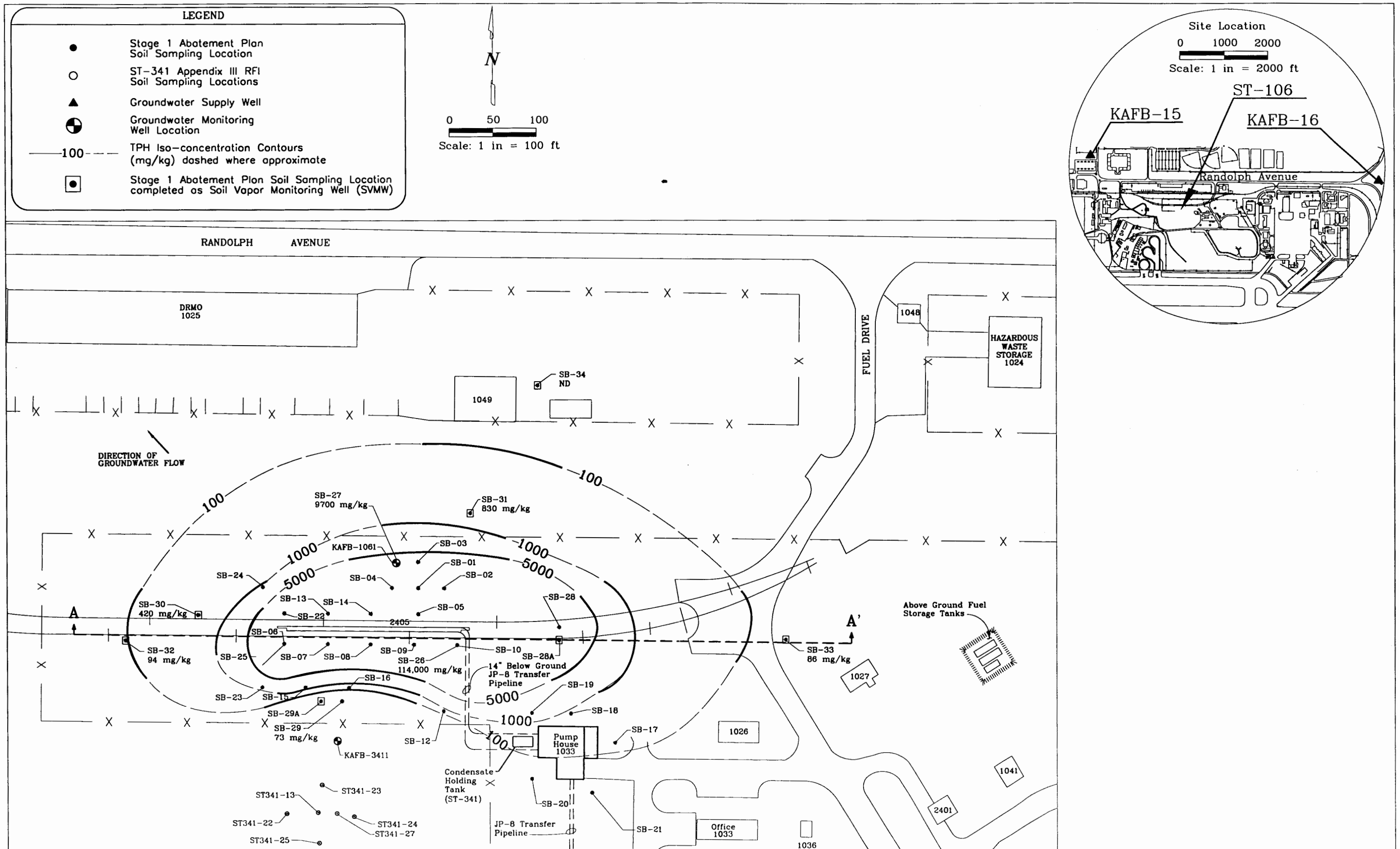

Figure 3-5. Horizontal Distribution of TPH Contaminated Soil (ST-106)

FIGURE_3-5.dwg

3.2.2 VOCs and SVOCs

Fifteen VOCs were detected in various soil samples collected at the Bulk Fuels Facility. Eleven of the VOCs (benzene, ethylbenzene, o-xylene, p/m-xylene, toluene, 1,2,4-trimethylbenzene, 1,3,5-trimethylbenzene, 1,2-dibromomethane, naphthalene, acetone, and chloromethane) were detected at concentrations in excess of their respective NMED or EPA adjusted residential soil screening levels. Most of these compounds are related to petroleum hydrocarbons and detection of these compounds is not unusual in soils contaminated with TPH at the levels observed at this site. Acetone is a common industrial solvent that is not associated with petroleum hydrocarbons the presence of which will be investigated separately since it is not related to the hydrocarbons release at the Bulk Fuels Facility.

Fourteen SVOCs also were detected in various soil samples collected at the Bulk Fuels Facility. Only one of the SVOCs, naphthalene, was detected at a concentration in excess of its EPA Region 6 HHRB screening level of 5.5 mg/kg. It was detected in six samples in concentrations ranging from 22 mg/kg to 120 mg/kg and the highest detection was in the 105-ft bgs sample from SB-25.

3.3 Soil Screening Results

Field-screening of soil with a PID was primarily used to determine which soil samples would be submitted for laboratory analysis and are recorded on the soil boring logs (Appendix A). The PID survey frequently detected soil samples with high (off-scale) concentrations of VOCs. Split-spoon soil samples frequently had detectable odors and samples from borings SB-25 and SB-26 frequently had free-phase product that was observed to separate from water when soils were placed in a jar of water. Since a PID can only detect volatile compounds, the PID screening results correlate better with VOC and GRO soil analytical results than with DRO analytical results due to the less volatile nature of diesel range petroleum hydrocarbons.

3.4 Groundwater Sample Analytical Results

The analytical results from one groundwater sample collected from well KAFB-106-1 and several samples collected from nearby KAFB-341-1 are summarized in Table 3-3. The complete analytical results from KAFB-106-1 are included in Appendix C. Samples from both wells were analyzed for GRO, DRO, VOCs, and SVOCs. In the sample from KAFB-106-1, no GRO, DRO, or SVOCs were detected. Only benzene (1.2 micrograms per liter [µg/L]) and toluene (3.8 µg/L) were detected in the sample from KAFB-106-1. Low levels (below method detection limits) of benzene (0.1 to 0.4 µg/L) and toluene (0.4 to 1.3 µg/L) have also been detected in monitoring well KAFB-341-1 during four sampling events in 2000.

Table 3-3. Summary of Reportable Groundwater Sampling Results at Bulk Fuels Facility (ST-106)

Compound Class	Analyte	EPA MCL	Sample Location	
			KAFB-106-1 11/16/01	KAFB-341-1 Jan-Dec 2000
VOCs	Benzene	5	1.2 µg/L	0.1 to 0.4 µg/L
	Toluene	1,000	3.8 µg/L	0.4 to 1.3 µg/L
Note: MCL = maximum contaminant level.				

Groundwater beneath the Bulk Fuels Facility is believed to flow to the northwest due to the gradient induced by a City of Albuquerque wellfield. Kirtland AFB production wells No. 15 and No. 16 are located in a downgradient direction from the Bulk Fuels Facility. Groundwater sampling of these wells is conducted regularly to monitor for the presence of any fuel-related contamination. To date no fuel-related compounds have been detected in Kirtland AFB wells No. 15 and No. 16.

3.5 Soil-Gas Survey Results

The soil-gas survey showed relatively low TPH concentrations in the soil gas across the whole ST-106 site. No zones of particularly high TPH concentrations were noted. The data from the soil-gas survey are presented in Appendix C.

Section 4

4. CONCEPTUAL MODEL

The following sections present the conceptual model for the subsurface contamination at the Bulk Fuels Facility. The sections discuss the geology, hydrogeology, and surface water hydrology of the site; the waste characteristics of JP4 and JP8; and the horizontal and vertical extent of the contamination that was delineated at the site.

4.1 Geology

The litho-stratigraphy observed at the Bulk Fuels Facility (Table 3-1) corresponds well with the regional hydro-stratigraphy presented in previously published reports (Hawley, Haase, and Lozinsky in Water Resources Research Institute [WRRI], 1994) as shown in Table 4-1.

- The top 85 ft of fine-grained materials corresponds to the USF-1 sub-unit of Upper Santa Fe Formation. Sub-unit USF-1 is distal alluvial piedmont fan deposits from the Sandia uplift.
- The sands found below about 144 ft bgs correspond to the USF-2 sub-unit of the Upper Santa Fe Formation. The USF-2 sub-unit is a stacked sequence of braided river-channel deposits (Ancestral Rio Grande) and inter-bedded fine- to medium-grained sediments of diverse (alluvial-lacustrine-eolian) origin.
- The alternating sands and clayey materials from about 86 ft bgs to about 144 ft bgs are probably a transition zone between USF-1 and USF-2.

Table 4-1. Hydrostratigraphic Units at the Bulk Fuels Facility

Regional Unit (Depositional Facies)	Site-Specific Zones	Description	Thickness	Approximate Depth Interval
USF-1 (Distal alluvial piedmont fan deposits from the Sandia uplift)		Thick discontinuous intervals of silt (ML) and silty or sandy clays (CL) w/minor lean clays (CL)	74' to 94'	Surface to ≈86' bgs
Transition Zone (Inter-tongued USF-1 and USF-2)	Upper transition sands (USF-2)	Poorly graded sand (SP) buff colored, fine-grained	15' to 25'	≈86' bgs to ≈107' bgs
	Upper transition fines (USF-1)	Primarily silty, sandy, and lean clays (CL) with minor silt (ML) zones	13' to 25'	≈107' bgs to ≈125' bgs
	Lower transition sands (USF-2)	Poorly graded sand (SP) buff colored, fine-grained	3' to 15'	≈125' bgs to ≈140' bgs
	Lower transition fines (USF-1)	Primarily silty, sandy, and lean clays (CL)	0' to 10'	≈140' bgs to ≈144' bgs
USF-2 (Stacked sequence of braided river-channel deposits [Ancestral Rio Grande] and inter-bedded fine- to medium-grained sediments of diverse origin)	Upper Ancestral Rio Grande deposits	Poorly graded fine-grained sands (SP) and well-graded fine- to coarse-grained sands (SW) buff colored, w/trace of gravels.	117' to 140'	≈144' bgs to ≈270' bgs
	Clay Zone	Lean clay (CL) brown, moist to wet, very stiff w/minor sandy and silty clay (CL)	0' to 15'	≈270' bgs to ≈280' bgs
	Lower Ancestral Rio Grande deposits	Poorly graded fine-grained sands (SP) and well-graded fine- to coarse-grained sands (SW) buff colored, w/higher fraction of gravel (GW) and fine-grained (GM) zones	>137'	≈280' bgs to >517' bgs

- The clay zone dividing USF-2 at about 270 ft bgs may be over-bank fines deposited as the Ancestral Rio Grande channel briefly meandered away from the site or distal alluvial fan deposits.

The site-specific zones described above are a generalization of the subsurface geology and as such do not suggest that individual layers (as identified in split-spoon samples or drill cuttings, Appendix A) are continuous across the site. The significance of the clay zone at 270 ft bgs was suggested by the rather distinct bottom-hole limit of contaminants in SB-26.

4.2 Hydrogeology

Groundwater at the Bulk Fuels Facility is contained in a regional unconfined alluvial aquifer. Minor water-bearing zones are present above the regional aquifer. Moist zones observed between 400 and 500 ft bgs at location SB-27 during the monitoring well installation may be remnants of the regional aquifer left perched as regional groundwater levels declined from municipal groundwater pumping. Shallower moist units may be water accumulated from infiltrating surface water. None of the observed moist units in the vadose zone appear to be part of the better defined perched water-bearing system observed on the eastern portions of Kirtland AFB. The depth to the regional groundwater table in well KAFB-106-1 is about 483 ft bgs.

Site-specific hydraulic parameters have not been determined. According to WRRI Water Resources Report 98-4172 "Application of Nonlinear-regression methods to a Ground-water Flow Model of the Albuquerque Basin, New Mexico" (1998), there are no specific yield estimates from aquifer tests for the Albuquerque basin aquifer materials but the specific yield of USF-2 type deposits ranges from 0.10 to 0.25.

4.3 Surface Water Hydrology

Surface water runoff from the Bulk Fuels Facility drains to the southwest through two unlined drainage ditches. Drainage from these two ditches is eventually captured by a storm sewer that discharges into the base's Outfall C north of Tijeras Arroyo. The area is fairly well graded and therefore much of the precipitation and storm water that runs onto the site remains onsite and either evaporates or percolates into the site soils.

4.4 Waste Characteristics

As shown in Table 3-1, the contaminants detected in the deep borings included BTEX compounds. Appendix E contains the chemical composition of JP4 and JP8, the two fuels known to have been used at the loading rack. As can be seen, although JP4 contains the BTEX compounds and other VOCs, the JP8 does not. Jet fuel JP4 is roughly a mixture of 50 percent gasoline and 50 percent kerosene and it has a hydrocarbon distribution between C4 and C16 with a predominance in the C6 range. Jet fuel JP8 (also known as Jet Fuel A-1) is a heavier, less volatile mixture than JP4 and typically has a hydrocarbon distribution between C10 and C19 with a predominance in the C13 range. The contamination detected at ST-106 contained significant concentrations of volatile compounds (e.g., 630-mg/kg benzene) indicating that the source of some of the contamination is JP4. Since the base stopped using JP4 in 1993, a portion of the contamination must have occurred before 1993.

4.5 Degree and Extent of Contamination

Petroleum contamination associated with the Bulk Fuels Facility has been identified in subsurface soils and in groundwater. The following subsections discuss the nature and extent of this contamination at the site.

4.5.1 Soil Contamination

4.5.1.1 Shallow Soil Contamination Associated with the November 1999 Releases

Shallow subsurface (≈4 ft bgs) soil samples collected from SB-02 through SB-04 contained no detectable petroleum hydrocarbons. This suggests that the emergency response to the November 1999 spills was successful at limiting the transport of contaminated soil.

4.5.1.2 Deep Soil Contamination

In the soil investigations, contamination was detected in several shallow soil borings (SB-01 through SB-24 are ≤40 ft bgs) at the ST-106 site (Figures 3-2 to 3-4 and Table 3-1). Contamination was found along the JP8 offloading rack that supplies the 300-ft-long belowground pipeline. The horizontal extent of the shallow (<40 ft bgs) contamination has been delineated during the direct push investigation. The contamination appeared to be limited to within 50 ft of the belowground pipelines.

Subsurface petroleum fuel contamination also was identified in two deep soil borings (SB-25 and SB-26). These two borings were located on the eastern and western ends of the offloading rack. The maximum concentration detected in boring SB-25 was 81,000 parts per million (ppm) TPH in the sample from 105 ft bgs, which is just below the Transition Zone between USF-1 and USF-2. The maximum concentration detected in boring SB-26 was 114,000 ppm TPH in the sample from 270 ft bgs, which is just above the Clay Zone that divide the USF-2 hydro-stratigraphic unit and is thought to be acting as confining layers for the contamination. Additional borings were installed to determine the horizontal extent of the soils that have TPH concentrations greater than 100 mg/kg.

Data from these additional borings demonstrate that the soils contaminated in excess of the NMED action level are limited to within about 310 ft of the surface, and within the area 65 ft south (SB-29A), 280 ft north (SB-34), 400 ft east (SB-32), and 175 ft west (SB-33) of the offloading rack. The total area of soil affected by the petroleum hydrocarbon contamination is estimated to be roughly 6.5 acres with depths of contamination as deep at 310 ft bgs.

4.5.2 Groundwater Contamination

Low levels of VOCs have been detected in the groundwater at ST-106 and to the south in the well at ST-341. The concentrations are less than the applicable EPA MCLs, but do indicate that the contaminants have migrated to the drinking water aquifer. The contaminants have not been detected in the Kirtland AFB water-supply wells KAFB-15 and KAFB-16.

Generally, the potential presence of free product in or near the saturated zone is indicated if concentrations in groundwater exceed approximately 1 percent of chemical solubility limits for the specific dissolved contaminants (Table 4-2). Since the highest detected groundwater concentration at the site is less than the solubility shown on Table 4-2 for the indicator compounds, it is unlikely that free product is in direct contact with the groundwater. This suggests that vapor-phase transport is the major route for the contamination that has reached the site groundwater.

direct contact with the groundwater. This suggests that vapor-phase transport is the major route for the contamination that has reached the site groundwater.

Table 4-2. Screening Level for Presence of Free-Phase Hydrocarbons Using Solubility Limits Bulk Fuel Facility (ST-106)

Compound	Water Solubility (mg/L)	Screening Level for Potential Presence of Product at the Groundwater Table (mg/L)	Maximum Observed Groundwater Concentration (mg/L)
Benzene	820 mg/L	8.2	1.2
Toluene	470 mg/L	4.7	3.8
Note: mg/L = milligrams per liter.			

4.6 Contaminant Source

The high TPH concentrations detected at each end of the offloading rack (SB-05 and SB-10 at the east end and SB-06 and SB-22 at the west end) without similar detections midway along the rack suggests that there were at least two separate release points in the underground pipelines serving the offloading rack. The detection of both DRO and GRO (and therefore JP4 and JP8) in the soils at ST-106 indicates that the source of the fuel contamination at the Bulk Fuels Facility was most likely a long-term, on-going source rather than a one-time recent release, since JP4 has not been used at Kirtland AFB since 1993. It is unlikely that VOCs could also be by-products of the weathering of the JP8 because the arid nature of the soils at Kirtland AFB and the lack of biological activity seen at other TPH sites at the base suggest that little weathering occurs in the soils at the Bulk Fuels Facility.

The fuel offloading rack is no longer in use and will be replaced thereby eliminating the source of soil contamination. The remaining contaminated soil continues to be a potential source for groundwater contamination.

4.7 Fate and Transport

As discussed above, the TPH contamination at ST-106 appears to be from two separate leaks in the piping at either end of the offloading rack. This contamination has traveled through the granular subsurface soils beneath the site and then accumulated on the surface of the clay layers. Since these clay layers were of varying thicknesses in the soil borings installed at the site, it is likely that they are discontinuous. As the contamination spread out over these clay layers, the TPH most likely encountered zones with greater permeability, which then allowed the contamination to migrate deeper into the subsurface. The deepest contamination that is present at the site appears to be VOCs in the soil gas. The concentrations were not measurable in the soil samples that were collected but are probably the source of the contamination detected in the two wells at the site.

The source of the contamination (the leaking piping) has been eliminated. Therefore, any future fate and transport of the contamination will be only the contaminant mass that is present in the subsurface today. This contamination could be expected to continue to disperse by volatilization (VOCs) and diffusion (VOCs and SVOCs) as it has done up until this point. If no remediation is implemented at the site, there is a chance that free-phase soil contamination, if any exists, above the clay layer at approximately 300 to 320 ft bgs could reach an area of greater permeability, which would allow it to migrate to the water table if no further clay layers are encountered. Because of the depth of the contamination, the lack of oxygen, and the lack of moisture in much of the subsurface soils, the reduction in contaminant concentrations by unenhanced biodegradation would not be expected to be significant.

Section 5

5. SUMMARY

Significant concentrations of TPH, VOCs, and SVOCs have been found in the subsurface soils at ST-106. The source of these contaminants, the fuel offloading rack, is no longer in use. The elevated levels of contaminants in the site soils are found well beneath the soil surface and should not pose a risk to human health and environment because there is no pathway for exposure to the soils. However, very low levels of these contaminants have been detected in the groundwater at the site. This groundwater is the source of the base's drinking water. Although the contaminants have not been detected in the drinking water wells that are approximately 1 mile from ST-106, a remedial strategy needs to be developed to address the contamination to prevent further migration of the contaminants to the groundwater. The results of this investigation therefore will be used to develop a Stage 2 Abatement Plan for the remediation of contaminated soils to prevent the further degradation of the groundwater beneath the site.

References

REFERENCES

Hawley, Haase, and Lozinsky, WRRI, 1994. An Underground View of the Albuquerque Basin, *Proceedings of the 39th Annual New Mexico Water Conference*, Las Cruces, NM. November.

NMED, 2000. NMED Soil Screening Guidance Technical Background Document, Santa Fe, New Mexico. December.

USAF, 1998. USAF Statement of Work. October.

USAF, 1997a. *RCRA Facility Investigation (RFI) Report, Appendix III, Phase 2 (HNUS).* Kirtland Air Force Base, Albuquerque, New Mexico. July 1997.

USAF, 1997b. *SWMU ST-341 Bioventing Feasibility Site Characterization Study.* Kirtland Air Force Base, Albuquerque, New Mexico. July 1997.

USAF, 1996. *Onsite Investigation Report – Tank 133.* Kirtland Air Force Base, Albuquerque, New Mexico.

USAF, 1994. RFI Report, Appendix III, Phase 1. Kirtland Air Force Base, Albuquerque, New Mexico.

USAF, 1995. *Kirtland Air Force Base-Wide Plans for the Installation Restoration Program,* Kirtland Air Force Base, Albuquerque, New Mexico. March 1995.

Water Resources Research Institute (WRRI), 1998. *Application of Nonlinear-regression methods to a Ground-water Flow Model of the Albuquerque Basin, New Mexico.* Water Resources Report 98-4172.

Appendix A

Appendix A

Soil Boring Logs

CH2MHILL

PROJECT NUMBER	BORING NUMBER
146631.BV.IC	ST-106 SB-25 SHEET 1 OF 4

SOIL BORING LOG

PROJECT : Kirtland AFB LOCATION : South side, west end of JP-8 offloading rack
ELEVATION : DRILLING CONTRACTOR Envirodrill, Inc. Dave S.
DRILLING METHOD AND EQUIPMENT USED : 8 3/4" OD HSA w/split spoon
WATER LEVELS : START : 07/17/2000 END: 07/20/2000 LOGGER : BJL

DEPTH BELOW SURFACE (FT)	INTERVAL (FT)	RECOVERY (FT)	SAMPLE #/TYPE	STANDARD PENETRATION TEST RESULTS 6"-6"-6"-6" (N)	SOIL DESCRIPTION: SOIL NAME, USCS GROUP SYMBOL, COLOR, MOISTURE CONTENT, RELATIVE DENSITY, OR CONSISTENCY, SOIL STRUCTURE, MINERALOGY.	COMMENTS: DEPTH OF CASING, DRILLING RATE, DRILLING FLUID LOSS, TESTS, AND INSTRUMENTATION. OVM (ppm): Headspace Analysis	Time
30							
	35-37	2.1	SS		Sandy Silt (ML) dry, orange-brown	2185 ppm VOC/PID	1345
40	40-41.5	1.5	SS		SAA. Sand is coarse grained, angular, quartzose	2235 ppm VOC/PID	1405
	45-46.5	1.5	SS		Silty Sand (SM) fg. sand, dry, orange-brown, loose poorly graded		
50	50-51.5	1.5	SS GRO/DRO/BTEX		SAA	2257 ppm VOC/PID	1435
	55-56.5	1.5	SS		SAA	1941 ppm VOC/PID	1450
60	60-61.5	1.5	SS		Silty & Sandy Clay (CL) hard, dark brown	1650 ppm VOC/PID	1515
	65-66.8	1.8	SS		0.4' Silt (ML) loose, orange-brown 0.5' Well graded sand (SW) loose 0.9'Silty Clay (CL) Dark red-brown, firm	1965 ppm VOC/PID	1530
70	70-71.8	1.8	SS		0.5' Silty Sand (SM-ML) poorly graded 0.2' Poorly graded sand (SW) fine grained 0.9' Well graded sand & gravel (SW-GW) 0.3' Sandy Silt (ML) poorly graded	2040 ppm VOC/PID	1544
	75-76.7	1.7	SS		1.1' Silty Clay (CL) firm, red-brown 0.6' Silt (ML) loose, Tr. well cemented sand	2045 ppm VOC/PID	1558
80	80-82.2	2.2	SS GRO/DRO/VOC		Silt (ML) red-brown, poorly graded, dry, loose	2198 ppm VOC/PID	1610
	85-87	2.0	SS		SAA, moist	1677 ppm VOC/PID	1705

CH2MHILL

PROJECT NUMBER	BORING NUMBER
146631.BV.IC	ST-106 SB-25 SHEET 2 OF 4

SOIL BORING LOG

PROJECT : Kirtland AFB
LOCATION : South side, west end of JP-8 offloading rack
ELEVATION :
DRILLING CONTRACTOR Envirodrill, Inc. Dave S.
DRILLING METHOD AND EQUIPMENT USED : 8 3/4" OD HSA w/split spoon
WATER LEVELS : START : 07/17/2000 END: 07/20/2000 LOGGER : BJL

DEPTH BELOW SURFACE (FT)	INTERVAL (FT)	RECOVERY (FT)	SAMPLE #/TYPE	STANDARD PENETRATION TEST RESULTS 6"-6"-6"-6" (N)	SOIL DESCRIPTION: SOIL NAME, USCS GROUP SYMBOL, COLOR, MOISTURE CONTENT, RELATIVE DENSITY, OR CONSISTENCY, SOIL STRUCTURE, MINERALOGY.	COMMENTS: DEPTH OF CASING, DRILLING RATE, DRILLING FLUID LOSS, TESTS, AND INSTRUMENTATION. OVM (ppm): Headspace Analysis Time
90	90-92	2.0	SS		Poorly graded sand (SP) fine grained, moist, loose	1766 ppm VOC/PID 1725
	95-96.2	1.2	SS		SAA. Still moist, Tr. coarse-grained sand.	1755 ppm VOC/PID 1737
100	100-101.9	1.9	SS		SAA + mysterious coarse-grained fiberous mineral	1957 ppm VOC/PID 1755
	105-106.9	1.9	SS GRO/DRO VOC/SVOC		1.5' Poorly graded sand (SP) fine-grained, wet 0.4' Silty Clay (CL) very firm, wet	1680 ppm VOC/PID 1810 wet w/product
110	110-112.4	2.4	SS		0.6' Poorly graded sand (SP) moist 1.8' Silt (ML) dry, light tan color	1650 ppm VOC/PID 1825 7/17 1830 End of day 7/17
	115-117.2	2.2	SS		Silty Clay (CL) dark brown, firm	1808 ppm VOC/PID 0848 7/18
120	120-122.4	2.4	SS		SAA	1204 ppm VOC/PID 0914
	125-127.4	2.4	SS GRO/DRO VOC		1.5' SAA 0.9' Silty Sand (SM) loose	1779 ppm VOC/PID 0950 Odor is different from above
130	130-131.5	1.5	SS		0.5' Silty Clay (CL) dark brown, moist 1.0' Silty Sand (SM) loose dry	2540 ppm VOC/PID 1035
	135-135.5	0.5	SS		Silty Clay (CL)	
140	140-142	2.0	SS		0.1' Silty Clay (CL) SAA 0.75' Silty Sand (SM) fine-grained sand, dry 1.15' Silty Clay (CL)	1200 ppm VOC/PID 1340
	145-147	2.0	SS GRO/DRO/BTEX		Poorly graded sand (SP) fine-grained, moist	1650 ppm VOC/PID 1410 Driller says "smells old"

CH2MHILL

PROJECT NUMBER	BORING NUMBER
146631.BV.IC	ST-106 SB-25 SHEET 3 OF 4

SOIL BORING LOG

PROJECT : Kirtland AFB LOCATION : South side, west end of JP-8 offloading rack
ELEVATION : DRILLING CONTRACTOR Envirodrill, Inc. Dave S.
DRILLING METHOD AND EQUIPMENT USED : 8 3/4" OD HSA w/split spoon
WATER LEVELS : START : 07/17/2000 END: 07/20/2000 LOGGER : BJL

DEPTH BELOW SURFACE (FT)	INTERVAL (FT)	RECOVERY (FT)	SAMPLE #/TYPE	STANDARD PENETRATION TEST RESULTS 6"-6"-6"-6" (N)	SOIL DESCRIPTION: SOIL NAME, USCS GROUP SYMBOL, COLOR, MOISTURE CONTENT, RELATIVE DENSITY, OR CONSISTENCY, SOIL STRUCTURE, MINERALOGY.	COMMENTS: DEPTH OF CASING, DRILLING RATE, DRILLING FLUID LOSS, TESTS, AND INSTRUMENTATION. OVM (ppm): Headspace Analysis
150	150-151	1.0	SS		Poorly graded sand (SP) fine-grained dry	1595 ppm VOC/PID 1435
	155	0.1	SS		Poorly graded sand (SP) fine- to medium-grained	1225 ppm VOC/PID
160	160-162	2.0	SS		2" Well-graded sand (SW) moist 22" Poorly graded sand (SP)	2200 ppm VOC/PID
	165-167	2.0	SS		Well graded sand (SW) fine- to coarse-grained, loose, dry.	1975 ppm VOC/PID End of day 7/18/2000 Begin 7/19/2000
170	170-171.5	1.5	SS		Well graded sand (SW) Fine- to medium-grained, Tr. Medium gravel, loose, dry	1273 ppm VOC/PID 0815
	175-176.25	1.3	SS GRO/DRO VOC/SVOC		Well graded sand (SA) fine- to coarse-grained, Tr. medium gravel, loose dry	497 ppm VOC/PID 0845 Obviously weaker VOC odor
180	180-181.75	1.8	SS		S.A.A (SW)	1850 ppm VOC/PID 0919
	185-186.8	1.8	SS		S.A.A. (SW)	1965 ppm VOC/PID 0945
190	190-191.8	1.8	SS		0.5' Well graded sand & gravel (SW) moist, 1.3' Well graded sand (SW) no gravel, dry	1745 ppm VOC/PID 1007 VOC conc. Lower in coarse material
	195-197.3	2.3	SS		0.3' Well graded sand (SW) dry w/med gravel 2.0' Silty Clay (CL) green-tan, some rust & orange spots, Yellow interface between SW & CL	1700 ppm VOC/PID in (SW) 2180 ppm VOC/PID in (CL)
200	200-201.5	1.5	SS GRO/DRO		Well graded sand (SW) dry, some yellow goop on med gravel grains & in distinct layer @ 200.4 ft bgs.	250 ppm VOC/PID 1111
	205-207	2.0	SS		Silty sand (SM) dry, tan, loose	1300 ppm VOC/PID 1605

CH2MHILL

PROJECT NUMBER	BORING NUMBER
146631.BV.IC	ST-106 SB-25 SHEET 4 OF 4

SOIL BORING LOG

PROJECT : Kirtland AFB
LOCATION : South side, west end of JP-8 offloading rack
ELEVATION :
DRILLING CONTRACTOR Envirodrill, Inc. Dave S.
DRILLING METHOD AND EQUIPMENT USED : 8 3/4" OD HSA w/split spoon
WATER LEVELS : START : 07/17/2000 END: 07/20/2000 LOGGER : BJL

DEPTH BELOW SURFACE (FT)	INTERVAL (FT)	RECOVERY (FT)	SAMPLE #/TYPE	STANDARD PENETRATION TEST RESULTS 6"-6"-6"-6" (N)	SOIL DESCRIPTION: SOIL NAME, USCS GROUP SYMBOL, COLOR, MOISTURE CONTENT, RELATIVE DENSITY, OR CONSISTENCY, SOIL STRUCTURE, MINERALOGY.	COMMENTS: DEPTH OF CASING, DRILLING RATE, DRILLING FLUID LOSS, TESTS, AND INSTRUMENTATION. OVM (ppm): Headspace Analysis
210	210-212	2.0	SS		Well graded sand (SW) w/silt tr. medium gravel dry	250-1500 ppm VOC/PID 1628
	214		cuttings		Coarse gravel (GW)	
	215-216.5	1.5	SS		Poorly graded sand (SP) fine-grained loose 4" Silty Clay (CL) red-brown, firm	430 ppm VOC/PID 1730 End of day 7/19/2000 begin 7/20/2000
220	220-221.2	1.2	SS		Silty sand (SM) Sand is caliche chips. Loose lt grey-brown, fingrained	102 ppm VOC/PID 0810
	225-227	2.0	SS GRO/DRO/VOC		Silty Sand (SM) fine grained sand, w/rusty layers	100 ppm VOC/PID 0900
230	230-232	2.0	SS GRO/DRO		Sandy & silty gravel (GM) dry	39 ppm VOC/PID 0940
	235-236	1.0	SS		Poorly graded sand (SP) fine-grained, dry tan	142 ppm VOC/PID 1017
240	240-241.5	1.5	SS		Well-graded sand (SW) and gravel, some fines	58 ppm VOC/PID 1102
	245-247	2.0	SS		Silty sand (SM) dry light tan	37-558 ppm VOC/PID 1150
250	250-252	2.2	SS GRO/DRO/VOC/SVOC		Poorly graded sand (SP) fined grained dry TD = 250 feet below ground surface 1240 7/20/2000	35-88 ppm VOC/PID VOC concentration decreases rapidly: lots of vapor little sorbed product

CH2MHILL

PROJECT NUMBER	BORING NUMBER
146631.BV.IC	ST-106 SB-26 SHEET 1 OF 5

SOIL BORING LOG

PROJECT : Kirtland AFB LOCATION : South side, east end of JP-8 offloading rack
ELEVATION : DRILLING CONTRACTOR Envirodrill, Inc. Dave S.
DRILLING METHOD AND EQUIPMENT USED : 8 3/4" OD HSA w/split spoon
WATER LEVELS : START : 07/21/2000 END: 08/08/2000 LOGGER : BJL

DEPTH BELOW SURFACE (FT)	INTERVAL (FT)	RECOVERY (FT)	SAMPLE #/TYPE	STANDARD PENETRATION TEST RESULTS 6"-6"-6" (N)	SOIL DESCRIPTION: SOIL NAME, USCS GROUP SYMBOL, COLOR, MOISTURE CONTENT, RELATIVE DENSITY, OR CONSISTENCY, SOIL STRUCTURE, MINERALOGY.	COMMENTS: DEPTH OF CASING, DRILLING RATE, DRILLING FLUID LOSS, TESTS, AND INSTRUMENTATION. OVM (ppm): Headspace Analysis	Time
30							
	35-36.5	1.5	SS		Silt w/sand & gravel (SM-GM) dark red, damp (<moist)	1479 ppm VOC/PID	
40	40-41.5	1.5	SS		SAA.	1500 ppm VOC/PID	1123
	45-47	2.0	SS		Silt (ML) w/sand, moist, dark red-brown, loose	1800 ppm VOC/PID	1135
		GRO/DRO/VOC					
50	50-51.5	1.5	SS		Silt (ML) w/sand, moist, dark red-brown, firm	1400 ppm VOC/PID	1148
	55-56	1.0	SS		Silty clay (CL) Dark red-brown, firm	2270 ppm VOC/PID	1157
60	60-62	2.0	SS		Silty Clay (CL) dark red-brown, firm	1500 ppm VOC/PID	1207
	65-67	2.0	SS		Well graded sand w/silt (SW-SM) damp, loose	2350 ppm VOC/PID Product visifble in wet jar	
70	70-72	2.0	SS		S.A.A.	2260 ppm VOC/PID	1256
	75-77.5	2.5	SS		Silty Clay (CL) firm, dark red, damp	1787 ppm VOC/PID Product visifble in wet jar	1318
		GRO/DRO/BTEX					
80	80-81.5	1.5	SS		S.A.A.	2200 ppm VOC/PID	1415
	85-87.5	2.5	SS		Silty clay (CL) damp, hard, dark red-brown	1400 ppm VOC/PID	1445

CH2MHILL

PROJECT NUMBER	BORING NUMBER
146631.BV.IC	ST-106 SB-26 SHEET 2 OF 5

SOIL BORING LOG

PROJECT : Kirtland AFB
LOCATION : South side, east end of JP-8 offloading rack
ELEVATION :
DRILLING CONTRACTOR Envirodrill, Inc. Dave S.
DRILLING METHOD AND EQUIPMENT USED : 8 3/4" OD HSA w/split spoon
WATER LEVELS : START : 07/21/2000 END: 08/08/2000 LOGGER : BJL

DEPTH BELOW SURFACE (FT)	INTERVAL (FT)	RECOVERY (FT)	SAMPLE #/TYPE	STANDARD PENETRATION TEST RESULTS 6"-6"-6"-6" (N)	SOIL DESCRIPTION: SOIL NAME, USCS GROUP SYMBOL, COLOR, MOISTURE CONTENT, RELATIVE DENSITY, OR CONSISTENCY, SOIL STRUCTURE, MINERALOGY.	COMMENTS: DEPTH OF CASING, DRILLING RATE, DRILLING FLUID LOSS, TESTS, AND INSTRUMENTATION. OVM (ppm): Headspace Analysis	Time
90	90-92.5	2.5	SS		interlayered: Poorly graded sand (SP) fine grained, and Well graded sand (SW) fine to coarse grained w/silt	1800 ppm VOC/PID	1525
	95-96.8	1.8	SS		Poorly graded sand (SP) fine-grained, moist	2500 ppm VOC/PID	1545
						End of day 7/21 Begin 7/24	
100	100-101.5	1.5	SS		Poorly graded sand (SP) fine-grained, some stratification apparent, moist	3500 ppm VOC/PID	0820
		GRO/DRO/VOC/SVOC					
	105-106.9	1.9	SS		Well graded sand (SW) loose moist, mostly fine-grained 3" Silty clay (CL) layer in middle	2800 ppm VOC/PID wet w/product	0848
110	110-111.5	1.5	SS		Well graded sand (SW) firm, moist, trace of clay	3000 ppm VOC/PID	0904
	115-117	2.0	SS		Silty Clay (CL) firm, moist	1500 ppm VOC/PID Lots of fuel in wet jar	0923
120	120-122.5	2.5	SS		S.A.A.	620 ppm VOC/PID	0940
	125-127	2.0	SS		Silty and lean clay (CL)	1500 ppm VOC/PID Saturated wet w/fuel product	1004
		GRO/DRO/BTEX					
130	130-132	2.0	SS		Poorly graded sand (SP) w/lean clay (CL) layers (1" maximum thickness)	3200 ppm VOC/PID Saturated wet w/fuel product, free product in wet jar	1049
	135-137	2.0	SS		Well graded sand (SW) Moist, loose	3100 ppm VOC/PID no product in wet jar	1109
140	140-142	2.0	SS		Poorly graded sand (SP) fine-grained, moist	4200 ppm VOC/PID	1146
	145-147	2.0	SS		Silty clay (CL) grey dry to damp, firm	1500 ppm VOC/PID	1420

CH2MHILL

PROJECT NUMBER	BORING NUMBER
146631.BV.IC	ST-106 SB-26 SHEET 3 OF 5

SOIL BORING LOG

PROJECT : Kirtland AFB
LOCATION : South side, east end of JP-8 offloading rack
ELEVATION :
DRILLING CONTRACTOR Envirodrill, Inc. Dave S.
DRILLING METHOD AND EQUIPMENT USED : 8 3/4" OD HSA w/split spoon
WATER LEVELS :
START : 07/21/2000 END: 08/08/2000 LOGGER : BJL

DEPTH BELOW SURFACE (FT)	INTERVAL (FT)	RECOVERY (FT)	SAMPLE #/TYPE	STANDARD PENETRATION TEST RESULTS 6"-6"-6"-6" (N)	SOIL DESCRIPTION: SOIL NAME, USCS GROUP SYMBOL, COLOR, MOISTURE CONTENT, RELATIVE DENSITY, OR CONSISTENCY, SOIL STRUCTURE, MINERALOGY.	COMMENTS: DEPTH OF CASING, DRILLING RATE, DRILLING FLUID LOSS, TESTS, AND INSTRUMENTATION. OVM (ppm): Headspace Analysis
150	150-151.5	1.5	SS GRO/DRO/VOC		Well graded sand (SP) moist loose	1200 ppm VOC/PID 1448
	155-156.5	1.5	SS		Well graded sand (SP) w/ gravel, fine to medium gravel, loose dry	1700 ppm VOC/PID 1535 End of day 7/24 Begin 7/25
160	160-160.5	0.5	SS		Poorly graded sand (SP) light tan, dry, well cemented. Sustains hammer blows. Sandstone	1900 ppm VOC/PID 0816 Very hard drilling, >100 blows/3" End of day 7/25 Begin 7/30
	165-167	2.0	SS		Well graded sand (SW) generally very fine- to medium-grained, loose, dry.	3200 ppm VOC/PID 0835 product in wet jar
170	170-172	2.0	SS		S.A.A. plus lean clay (CL) layer at 171.5 brown soft moist	2800 ppm VOC/PID 0925
	175-177	2.0	SS		Well graded sand (SW) loose moist	3500 ppm VOC/PID 1400
180	180-182	2.0	SS		Poorly graded sand (SP) fine-grained, w/silt	1200 ppm VOC/PID 1445
	185-187	2.0	SS		Gravelly sand (SW) fine-grained sand w/fine gravel, loose, moist	2380 ppm VOC/PID 1520
190	190-192	2.0	SS		Well graded sand (SW) fine- to coarse-grained, moist, loose, thin (<2mm) clay layers	1500 ppm VOC/PID 1550 Product in wet jar
	195-197	2.0	SS		1.5' S.A.A. 0.5' Lean Clay (CL) w/fine gravel	2500 ppm VOC/PID 1625
200	200-202	2.0	SS		Well graded sand (SW) trace of fine gravel & clays, loose moist	1800 ppm VOC/PID 1700 End of day 7/31 begin 8/2
	205-207	2.0	SS		1.0' Silty clay (CL) lt brown, moist soft, medium plasticity 1.0' Poorly graded sand (SP) light brown moist loose fine-grained	3500 ppm VOC/PID 0945

CH2MHILL

PROJECT NUMBER	BORING NUMBER
146631.BV.IC	ST-106 SB-26 SHEET 4 OF 5

SOIL BORING LOG

PROJECT : Kirtland AFB LOCATION : South side, east end of JP-8 offloading rack
ELEVATION : DRILLING CONTRACTOR Envirodrill, Inc. Dave S.
DRILLING METHOD AND EQUIPMENT USED : 8 3/4" OD HSA w/split spoon
WATER LEVELS : START : 07/21/2000 END: 08/08/2000 LOGGER : BJL

DEPTH BELOW SURFACE (FT)	INTERVAL (FT)	RECOVERY (FT)	SAMPLE #/TYPE	STANDARD PENETRATION TEST RESULTS 6"-6"-6"-6" (N)	SOIL DESCRIPTION: SOIL NAME, USCS GROUP SYMBOL, COLOR, MOISTURE CONTENT, RELATIVE DENSITY, OR CONSISTENCY, SOIL STRUCTURE, MINERALOGY.	COMMENTS: DEPTH OF CASING, DRILLING RATE, DRILLING FLUID LOSS, TESTS, AND INSTRUMENTATION. OVM (ppm): Headspace Analysis
210	210-211.5	1.5	SS		Well graded sand w/gravel (SW) moist, lt brown, gravel is fine, sub-round, loose	2900 ppm VOC/PID 1029 Product in wet jar
	215-216.5	1.5	SS		Well graded sand (SP) lt. Brown, loose, moist, tr. (<5%) fine gravel	3100 ppm VOC/PID 1106 Product in wet jar
220	220-222	2.0	SS		Well graded sand w/gravel (SM) lt. brown, multicolored sand grains, loose, moist, gravel is predominantly fine, tr. Coarse-grained gravel, max size=0.75"	3100 ppm VOC/PID 1150 product in wet jar
	225-227	2.0	SS		S.A.A. (SW)	3700 ppm VOC/PID 1352 Product int wet jar
					Cuttings show sandy lean clay (CL) back to (SW) at 230' bgs	Hard drilling at 228' bgs 1100 ppm VOC/PID in clays
230	230-231.5	1..5	SS		S.A.A. (SW) with increase in gravel (fine) fraction, Tr. coarse gravel, max size 1", aproximately 25% gravel	3400 ppm VOC/PID 1454
	235-237	2.0	SS		1.0' Poorly graded sand (SP) lt brown, moist, loose, mostly fine-grained sand, tr med-grained 1.0' Well graded sand w/gravel (SW) lt brown, moist loose, gravel is fine, tr coarse, max size <0.75".	3500 ppm VOC/PID 1532 Product in wet jar, highly emulsified, strong odor
240	240-242	2.0	SS		1.0' Well graded sand (SW) yellowish-orange, moist, loose, tr fine gravel (3%) 1.0' Poorly graded sand (SP) mostly fine-grained, moist loose	2500 ppm VOC/PID 1606 Product int wet jar
	245-247	2.0	SS		S.A.A. lt brown, moist, loose	2500 ppm VOC/PID 1640 Product in wet jar, strong odor
250	250-252	2.0	SS		Well graded sand (SW) lt brown moist loose	2200 ppm VOC/PID 1723
	255-257	2.0	SS		S.A.A. plus tr fine gravel	1700 ppm VOC/PID 1750 Product in wet jar End of day 8/2/2000 Begin 8/3/2000
260	260-262	2.0	SS		Poorly graded sand (SP) Fine grained loose dry	1500 ppm VOC/PID 0835 Product in wet jar, solvent odor
	265-267	2.0	SS		S.A.A. moist, playbox/beach sand	1100 ppm VOC/PID 0915 Solvent odor

CH2MHILL

PROJECT NUMBER	BORING NUMBER
146631.BV.IC	ST-106 SB-26 SHEET 3 OF 5

SOIL BORING LOG

PROJECT : Kirtland AFB
LOCATION : South side, east end of JP-8 offloading rack
ELEVATION :
DRILLING CONTRACTOR Envirodrill, Inc. Dave S.
DRILLING METHOD AND EQUIPMENT USED : 8 3/4" OD HSA w/split spoon
WATER LEVELS : START : 07/21/2000 END: 08/08/2000 LOGGER : BJL

DEPTH BELOW SURFACE (FT)	INTERVAL (FT)	RECOVERY (FT)	SAMPLE #/TYPE	STANDARD PENETRATION TEST RESULTS 6"-6"-6"-6" (N)	SOIL DESCRIPTION: SOIL NAME, USCS GROUP SYMBOL, COLOR, MOISTURE CONTENT, RELATIVE DENSITY, OR CONSISTENCY, SOIL STRUCTURE, MINERALOGY.	COMMENTS: DEPTH OF CASING, DRILLING RATE, DRILLING FLUID LOSS, TESTS, AND INSTRUMENTATION. OVM (ppm): Headspace Analysis
150	150-151.5	1.5	SS GRO/DRO/VOC		Well graded sand (SP) moist loose	1200 ppm VOC/PID 1448
	155-156.5	1.5	SS		Well graded sand (SP) w/ gravel, fine to medium gravel, loose dry	1700 ppm VOC/PID 1535 End of day 7/24 Begin 7/25
160	160-160.5	0.5	SS		Poorly graded sand (SP) light tan, dry, well cemented. Sustains hammer blows. Sandstone	1900 ppm VOC/PID 0816 Very hard drilling, >100 blows/3" End of day 7/25 Begin 7/30
	165-167	2.0	SS		Well graded sand (SW) generally very fine- to medium-grained, loose, dry.	3200 ppm VOC/PID 0835 product in wet jar
170	170-172	2.0	SS		S.A.A. plus lean clay (CL) layer at 171.5 brown soft moist	2800 ppm VOC/PID 0925
	175-177	2.0	SS		Well graded sand (SW) loose moist	3500 ppm VOC/PID 1400
180	180-182	2.0	SS		Poorly graded sand (SP) fine-grained, w/silt	1200 ppm VOC/PID 1445
	185-187	2.0	SS		Gravelly sand (SW) fine-grained sand w/fine gravel, loose, moist	2380 ppm VOC/PID 1520
190	190-192	2.0	SS		Well graded sand (SW) fine- to coarse-grained, moist, loose, thin (<2mm) clay layers	1500 ppm VOC/PID 1550 Product in wet jar
	195-197	2.0	SS		1.5' S.A.A. 0.5' Lean Clay (CL) w/fine gravel	2500 ppm VOC/PID 1625
200	200-202	2.0	SS		Well graded sand (SW) trace of fine gravel & clays, loose moist	1800 ppm VOC/PID 1700 End of day 7/31 begin 8/2
	205-207	2.0	SS		1.0' Silty clay (CL) lt brown, moist soft, medium plasticity 1.0' Poorly graded sand (SP) light brown moist loose fine-grained	3500 ppm VOC/PID 0945

CH2MHILL

PROJECT NUMBER	BORING NUMBER
146631.BV.IC	ST-106 SB-26 SHEET 4 OF 5

SOIL BORING LOG

PROJECT : Kirtland AFB
LOCATION : South side, east end of JP-8 offloading rack
ELEVATION :
DRILLING CONTRACTOR Envirodrill, Inc. Dave S.
DRILLING METHOD AND EQUIPMENT USED : 8 3/4" OD HSA w/split spoon
WATER LEVELS : START : 07/21/2000 END: 08/08/2000 LOGGER : BJL

DEPTH BELOW SURFACE (FT)	INTERVAL (FT)	RECOVERY (FT)	SAMPLE #/TYPE	STANDARD PENETRATION TEST RESULTS 6"-6"-6"-6" (N)	SOIL DESCRIPTION: SOIL NAME, USCS GROUP SYMBOL, COLOR, MOISTURE CONTENT, RELATIVE DENSITY, OR CONSISTENCY, SOIL STRUCTURE, MINERALOGY.	COMMENTS: DEPTH OF CASING, DRILLING RATE, DRILLING FLUID LOSS, TESTS, AND INSTRUMENTATION. OVM (ppm): Headspace Analysis
210	210-211.5	1.5	SS		Well graded sand w/gravel (SW) moist, lt brown, gravel is fine, sub-round, loose	2900 ppm VOC/PID 1029 Product in wet jar
	215-216.5	1.5	SS		Well graded sand (SP) lt. Brown, loose, moist, tr. (<5%) fine gravel	3100 ppm VOC/PID 1106 Product in wet jar
220	220-222	2.0	SS		Well graded sand w/gravel (SM) lt. brown, multicolored sand grains, loose, moist, gravel is predominantly fine, tr. Coarse-grained gravel, max size=0.75"	3100 ppm VOC/PID 1150 product in wet jar
	225-227	2.0	SS		S.A.A. (SW)	3700 ppm VOC/PID 1352 Product int wet jar
					Cuttings show sandy lean clay (CL) back to (SW) at 230' bgs	Hard drilling at 228' bgs 1100 ppm VOC/PID in clays
230	230-231.5	1..5	SS		S.A.A. (SW) with increase in gravel (fine) fraction, Tr. coarse gravel, max size 1", aproximately 25% gravel	3400 ppm VOC/PID 1454
	235-237	2.0	SS		1.0' Poorly graded sand (SP) lt brown, moist, loose, mostly fine-grained sand, tr med-grained 1.0' Well graded sand w/gravel (SW) lt brown, moist loose, gravel is fine, tr coarse, max size <0.75".	3500 ppm VOC/PID 1532 Product in wet jar, highly emulsified, strong odor
240	240-242	2.0	SS		1.0' Well graded sand (SW) yellowish-orange, moist, loose, tr fine gravel (3%) 1.0' Poorly graded sand (SP) mostly fine-grained, moist loose	2500 ppm VOC/PID 1606 Product int wet jar
	245-247	2.0	SS		S.A.A. lt brown, moist, loose	2500 ppm VOC/PID 1640 Product in wet jar, strong odor
250	250-252	2.0	SS		Well graded sand (SW) lt brown moist loose	2200 ppm VOC/PID 1723
	255-257	2.0	SS		S.A.A. plus tr fine gravel	1700 ppm VOC/PID 1750 Product in wet jar End of day 8/2/2000 Begin 8/3/2000
260	260-262	2.0	SS		Poorly graded sand (SP) Fine grained loose dry	1500 ppm VOC/PID 0835 Product in wet jar, solvent odor
	265-267	2.0	SS		S.A.A. moist, playbox/beach sand	1100 ppm VOC/PID 0915 Solvent odor

CH2MHILL

PROJECT NUMBER	BORING NUMBER
146631.BV.IC	ST-106 SB-26 SHEET 5 OF 5

SOIL BORING LOG

PROJECT : Kirtland AFB
LOCATION : South side, east end of JP-8 offloading rack
ELEVATION :
DRILLING CONTRACTOR Envirodrill, Inc. Dave S.
DRILLING METHOD AND EQUIPMENT USED : 8 3/4" OD HSA w/split spoon
WATER LEVELS : START : 07/21/2000 END: 08/08/2000 LOGGER : BJL

DEPTH BELOW SURFACE (FT)	INTERVAL (FT)	RECOVERY (FT)	SAMPLE #/TYPE	STANDARD PENETRATION TEST RESULTS 6"-6"-6"-6" (N)	SOIL DESCRIPTION: SOIL NAME, USCS GROUP SYMBOL, COLOR, MOISTURE CONTENT, RELATIVE DENSITY, OR CONSISTENCY, SOIL STRUCTURE, MINERALOGY.	COMMENTS: DEPTH OF CASING, DRILLING RATE, DRILLING FLUID LOSS, TESTS, AND INSTRUMENTATION. OVM (ppm): Headspace Analysis
270	270-272	2.0	SS		1' Silty clay (CL) moist brown stiff 1' Silt (ML) w/ clay, moist-wet, brown, firm	1700 ppm VOC/PID 1015 Solvent odor, driller says "fresh smell" Hard drilling at 272' Clay?
			GRO/DRO/VOC			
	275-277	2.0	SS		Silt (ML) and Silty Clay (CL) layered, brown & tan, stiff clay, moist	1300 ppm VOC/PID 1130
280	280-282	2.0	SS		Silty Clay (CL) Very stiff, moist, brown w/yellow-orange staining	260 ppm VOC/PID 1345 Odor in core. No odor, sheen, or production in wet jar. Very hard drilling.
	285-286.5	1.5	SS		Well graded sand (SW) w/fine gravel, loose, dry	1558 ppm VOC/PID 1425
			GRO/DRO/BTEX			Only faint odor. 62 ppm VOC/PID after letting sands sit for 5 minutes to vent soil gas.
290	290-291.5	1.5	SS		Poorly graded sand (SP) loose, fin-grained, moist	1360 ppm VOC/PID 1525 Faint odor. 52 ppm VOC after venting soil. Wet jar: no odor sheen or product, 2.2ppm VOC/PID in jar headspace
	295-295.5	7"	SS		Well graded sand (SW) loose w/ gravel, moist, fine sand	4016 ppm VOC/PID 1630
			GRO/DRO/BTEX			Faint odor in jar and spoon. 85 ppm VOC/PID in wet jar headspace
300	300-301	1.0	SS		Silty sandy gravel (GM) loose upto 15% medium gravel, 40% sand or finer.	3400 ppm VOC/PID top 6" (sluff?) 647 ppm VOC/PID in bottom 6" 113 ppm VOC/PID in wet jar End of day 8/3/2000
	305-306	8"	SS		Gravelly sand (SW) loose moist slight odor	650 ppm VOC/PID 1015 8/4/2000
310	310-310.5	0.5	SS	100/6"	Gravelly sand (SW) loose moist slight odor	75 ppm VOC/PID 1135 Driller says medium gravel
			GRO/DRO/BTEX			
	315-315.5	0.5	SS		Gravelly well graded sand (SW) Loose 20% fine-medium gravel, no odor	68 ppm VOC/PID 1240
			GRO/DRO/BTEX		TD = 315 ft bgs @ 1240 8/4/2000	
320						

CH2MHILL

PROJECT NUMBER	BORING NUMBER
146631.BV.IC	ST-106 SB-27 SHEET 1 OF 9

SOIL BORING LOG

PROJECT : KAFB Bulk Fuels Facility (ST-106) LOCATION : 65' N & 55' W of E end of rack
ELEVATION : DRILLING CONTRACTOR WDC/Marion Phillips
DRILLING METHOD AND EQUIPMENT USED : SpeedStar 30K Stratex ARCH w/24" split spoon
WATER LEVELS : 483' bgl START : 10/11/2000 END: 10/21/2000 LOGGER : BJL

DEPTH BELOW SURFACE (FT)	INTERVAL (FT)	RECOVERY (FT)	SAMPLE #/TYPE	STANDARD PENETRATION TEST RESULTS 6"-6"-6"-6" (N)	SOIL DESCRIPTION: SOIL NAME, USCS GROUP SYMBOL, COLOR, MOISTURE CONTENT, RELATIVE DENSITY, OR CONSISTENCY, SOIL STRUCTURE, MINERALOGY.	COMMENTS: DEPTH OF CASING, DRILLING RATE, DRILLING FLUID LOSS, TESTS, AND INSTRUMENTATION. OVM (ppm): Headspace Analysis	Time
5	5-7	2.0	SS GRO/DRO	6-7-7	Silty Clay (CL) Medium brown damp firm w/cream colored streaks	0 ppm VOC/PID End 10/11/00 Begin 10/12/00	1735
15	15-17	2.0	SS GRO/DRO	5-5-8	18" Silt (ML) light brown damp 6" Silty Clay(CL) Medium brown frim damp	0 ppm VOC/PID	840
25	25-27	2.0	SS GRO/DRO	12-12-16	Gravelly & Sandy Clay (CL) Creamy-tan dampl hard w/spar& qtz gravels	0 ppm VOC/PID	920
35	35-37	2.0	SS GRO/DRO/BTEX	7-9-12	Silt (ML) & Silty Clay (CL) light brown damp firm	0 ppm VOC/PID	1005
45	45-47	2.0	SS GRO/DRO/BTEX	8-12-13	Sandy Silt (SM) light brown firm mostly f.g. sand ~5% med sand	0 ppm VOC/PID	1135
55	55-57	2.0	SS GRO/DRO	10-24-24	Well graded sand to Silt (SW-ML) Yellwoish-orange to light brown damp firm /well packed spar qtz & dark minerals	0 ppm VOC/PID	1356

CH2MHILL

PROJECT NUMBER	BORING NUMBER
146631.BV.IC	ST-106 SB-27 SHEET 2 OF 9

SOIL BORING LOG

PROJECT : KAFB Bulk Fuels Facility (ST-106) LOCATION : 65' N & 55' W of E end of rack
ELEVATION : DRILLING CONTRACTOR WDC/Marion Phillips
DRILLING METHOD AND EQUIPMENT USED : SpeedStar 30K Stratex ARCH w/24" split spoon
WATER LEVELS : 483' bgl START : 10/11/2000 END: 10/21/2000 LOGGER : BJL

DEPTH BELOW SURFACE (FT)	INTERVAL (FT)	RECOVERY (FT)	SAMPLE #/TYPE	STANDARD PENETRATION TEST RESULTS 6"-6"-6"-6" (N)	SOIL DESCRIPTION: SOIL NAME, USCS GROUP SYMBOL, COLOR, MOISTURE CONTENT, RELATIVE DENSITY, OR CONSISTENCY, SOIL STRUCTURE, MINERALOGY.	COMMENTS: DEPTH OF CASING, DRILLING RATE, DRILLING FLUID LOSS, TESTS, AND INSTRUMENTATION. OVM (ppm): Headspace Analysis Time
65	65-67	2.0	SS GRO/DRO/VOC/SVOC	7-14-11	Silt (ML) light brown damp firm in top & bottom 6", Well graded silty sand (SW-ML) in middle	0 ppm VOC/PID 1517
75	75-77	2.0	SS GRO/DRO	6-11-24	Silty (ML) light brown firm dry & Silty Clay (CL) light brown hard dry	0 ppm VOC/PID 1655
85	85-87	2.0	SS GRO/DRO	2-8-25	Poorly graded sand (SP) light tan dry loose fine-grained	0 ppm VOC/PID 1735 End 10/11/2000 Begin 10/12/2000
95	95-97	2.0	SS GRO/DRO	8-15-18	Silt (ML) yellow-orange-tan, dry-damp, cohesive/lightly cemented w/root casts	210 ppm VOC/PID 745
105	105-107	2.0	SS GRO/DRO (Mass Spec)	9-18-28	Silt (ML) yellow-orange-tan, dry-damp, firm not cemented Tr. Of 2-cm subrounded concretions	333 ppm VOC/PID 850
115		No recovery	Cuttings	NA	Silty clay (CL) light brown moist	NA ppm VOC/PID 930

CH2MHILL

PROJECT NUMBER	BORING NUMBER
146631.BV.IC	ST-106 SB-27 SHEET 3 OF 9

SOIL BORING LOG

PROJECT : KAFB Bulk Fuels Facility (ST-106) LOCATION : 65' N & 55' W of E end of rack
ELEVATION : DRILLING CONTRACTOR WDC/Marion Phillips
DRILLING METHOD AND EQUIPMENT USED : SpeedStar 30K Stratex ARCH w/24" split spoon
WATER LEVELS : 483' bgl START : 10/11/2000 END: 10/21/2000 LOGGER : BJL

DEPTH BELOW SURFACE (FT)	INTERVAL (FT)	RECOVERY (FT)	SAMPLE #/TYPE	STANDARD PENETRATION TEST RESULTS 6"-6"-6"-6" (N)	SOIL DESCRIPTION: SOIL NAME, USCS GROUP SYMBOL, COLOR, MOISTURE CONTENT, RELATIVE DENSITY, OR CONSISTENCY, SOIL STRUCTURE, MINERALOGY.	COMMENTS: DEPTH OF CASING, DRILLING RATE, DRILLING FLUID LOSS, TESTS, AND INSTRUMENTATION. OVM (ppm): Headspace Analysis Time
125	125-127	2.0	SS GRO/DRO/VOC MS / MSD	32-37-50/5	Poorly graded sand (SP) tan dry loose	284 ppm VOC/PID 1004
135		No recovery	Cuttings	NA	Lean clay (CL) dark brown moist	
	140'		Cuttings		Fine gravel w/sand (GP)	
145	145-147	2.0	SS GRO/DRO/SVOC MS / MSD SVOC dup	10-28-28	3" Lean clay (CL) w/c.g. sand dark brown damp. Lower 15" Well graded sand (SW) w/fine gravel, dry. Gravels are metamorphic + LS	10 ppm VOC/PID 1330
155		No recovery		NA		
165	165-167	2.0	SS GRO/DRO/BTEX	4-18-22	Poorly graded sand & silt (SP-SM) light tan, dry, well packed	25 ppm VOC/PID 1250 weak odor
175		No recovery	Cuttings	NA	Gravelly sand (SW) light tan, damp some Bandalier(?) tuff chips	1445

CH2MHILL

PROJECT NUMBER	BORING NUMBER
146631.BV.IC	ST-106 SB-27 SHEET 4 OF 9

SOIL BORING LOG

PROJECT : KAFB Bulk Fuels Facility (ST-106) LOCATION : 65' N & 55' W of E end of rack
ELEVATION : DRILLING CONTRACTOR WDC/Marion Phillips
DRILLING METHOD AND EQUIPMENT USED : SpeedStar 30K Stratex ARCH w/24" split spoon
WATER LEVELS : 483' bgl START : 10/11/2000 END: 10/21/2000 LOGGER : BJL

DEPTH BELOW SURFACE (FT)	INTERVAL (FT)	RECOVERY (FT)	SAMPLE #/TYPE	STANDARD PENETRATION TEST RESULTS 6"-6"-6"-6" (N)	SOIL DESCRIPTION: SOIL NAME, USCS GROUP SYMBOL, COLOR, MOISTURE CONTENT, RELATIVE DENSITY, OR CONSISTENCY, SOIL STRUCTURE, MINERALOGY.	COMMENTS: DEPTH OF CASING, DRILLING RATE, DRILLING FLUID LOSS, TESTS, AND INSTRUMENTATION. OVM (ppm): Headspace Analysis Time
185	185-187	2.0	SS GRO/DRO/BTEX GRO/DRO/BETX dups	4-12-12	S.A.A	30 ppm VOC/PID 1530
195	No recovery			NA		NA ppm VOC/PID
205	205-207	2.0	SS GRO/DRO/BTEX GRO/DRO dups	5-5-12	Gravely sand (SW) light tan, moist, gravels upto 3-cm rounded	188 ppm VOC/PID 1648
	210-212		Cuttings		Sandy clay (CL) dark brown omist hard	Fumes
215	No recovery			NA		NA ppm VOC/PID 1520
	217-219		Cuttings		Pumice layer - white fiberous coase sand to 3-cm sized	
225	225-227	2.0	SS GRO/DRO/BTEX	4-15-30	Poorly graded sadn (SP) light tan fine grained firmly packed	107 ppm VOC/PID 1807 End of day 11/13/2000 Begin 11/14/2000
235	235-237	2.0	SS GRO/DRO/VOC VOC dup	- - -	Poorly graded sand (SP) light tan, fine-grained well-packed, alternating layers of	151 ppm VOC/PID 915

CH2MHILL

PROJECT NUMBER	BORING NUMBER
146631.BV.IC	ST-106 SB-27 SHEET 5 OF 9

SOIL BORING LOG

PROJECT : KAFB Bulk Fuels Facility (ST-106) LOCATION : 65' N & 55' W of E end of rack
ELEVATION : DRILLING CONTRACTOR WDC/Marion Phillips
DRILLING METHOD AND EQUIPMENT USED : SpeedStar 30K Stratex ARCH w/24" split spoon
WATER LEVELS : 483' bgl START : 10/11/2000 END: 10/21/2000 LOGGER : BJL

DEPTH BELOW SURFACE (FT)	INTERVAL (FT)	RECOVERY (FT)	SAMPLE #/TYPE	STANDARD PENETRATION TEST RESULTS 6"-6"-6"-6" (N)	SOIL DESCRIPTION: SOIL NAME, USCS GROUP SYMBOL, COLOR, MOISTURE CONTENT, RELATIVE DENSITY, OR CONSISTENCY, SOIL STRUCTURE, MINERALOGY.	COMMENTS: DEPTH OF CASING, DRILLING RATE, DRILLING FLUID LOSS, TESTS, AND INSTRUMENTATION. OVM (ppm): Headspace Analysis Time
245						
255	Cuttings				S.A.A. No more ash	**WET cuttings**
	262		Cuttings		**Transition** Lean clay (CL) moist	
265	265-267	2.0	SS	7-11-15	Silty clay (CL) light brown moist firm in top 12" Lean clay (CL) moist very stiff medium brown in lower 12"	212.0 ppm VOC/PID 1040 samples are of silty clay
		GRO/DRO/VOC/SVOC SVOC dup				
	265-273		Cuttings		Lean clay (CL) medium brown moist	
	273-275		Cuttings		Silt (ML)	
275	275-276		Cuttings		Lean clay (CL) medium brown moist	
	276-280		Cuttings		Well graded sand (SW)	Wet, no odor
	280-285		Cuttings		Gravelly sand (GW) upto 2-cm	no odor
285	285-287	2.0	SS	4-8-23	Silty clay (CL) & Lean clay (CL) medium brown very stiff damp	59 ppm VOC/PID 1250
		GRO/DRO/BTEX/SVOC				
295	Cuttings				Sandy gravel (SW) upto 25% gravel to 5-cm gravel	Lost circulatior 1440

CH2MHILL

PROJECT NUMBER	BORING NUMBER
146631.BV.IC	ST-106 SB-27 SHEET 6 OF 9

SOIL BORING LOG

PROJECT : KAFB Bulk Fuels Facility (ST-106) LOCATION : 65' N & 55' W of E end of rack
ELEVATION : DRILLING CONTRACTOR WDC/Marion Phillips
DRILLING METHOD AND EQUIPMENT USED : SpeedStar 30K Stratex ARCH w/24" split spoon
WATER LEVELS : 483' bgl START : 10/11/2000 END: 10/21/2000 LOGGER : BJL

DEPTH BELOW SURFACE (FT)	INTERVAL (FT)	RECOVERY (FT)	SAMPLE #/TYPE	STANDARD PENETRATION TEST RESULTS 6"-6"-6"-6" (N)	SOIL DESCRIPTION: SOIL NAME, USCS GROUP SYMBOL, COLOR, MOISTURE CONTENT, RELATIVE DENSITY, OR CONSISTENCY, SOIL STRUCTURE, MINERALOGY.	COMMENTS: DEPTH OF CASING, DRILLING RATE, DRILLING FLUID LOSS, TESTS, AND INSTRUMENTATION. OVM (ppm): Headspace Analysis Time
305	305-307	2.0	SS GRO/DRO/BTEX	3-10-28	1' of sandy gravel (GW) well rounded up to 3-cmmetamorphic rock dry.	2 ppm VOC/PID 1545
					1' of Sandy clay (CL) medium brown damp	
	310		Cuttings		Silty sand (SM)	
315		Cuttings			Well graded sand (SW) fine to coarse-grained sands, tr. 2-cm gravel moist	1710
	320		Cuttings		Poorly graded sand (SP) fine grained	Lost circulation
	322		Cuttings		Clayey gravel (CL) 1-cm gravel	End of day 11/14/2000 1740 New day 11/15/2000
325		Cuttings			Poorly graded sand (SW) light brown fine-grained moist	**Wet 325' to 328'**
335						
	337		Cuttings		Well graded sand (SW) w/silt and fine gravel	**Wet**
	345		Cuttings		Poorly graded sand (SP) fine grained	**Wet**
345	345-347	2.0	SS GRO/DRO/BTEX	10-24-33	Gravelly sand (SW) rounded gravel, tr. clay at 347' damp	0 ppm VOC/PID 1200
	350		Cuttings		Well graded gravel sand silt mix (GM)	**Wet**
355						

CH2MHILL

PROJECT NUMBER	BORING NUMBER
146631.BV.IC	ST-106 SB-27 SHEET 7 OF 9

SOIL BORING LOG

PROJECT : KAFB Bulk Fuels Facility (ST-106) LOCATION : 65' N & 55' W of E end of rack
ELEVATION : DRILLING CONTRACTOR WDC/Marion Phillips
DRILLING METHOD AND EQUIPMENT USED : SpeedStar 30K Stratex ARCH w/24" split spoon
WATER LEVELS : 483' bgl START : 10/11/2000 END: 10/21/2000 LOGGER : BJL

DEPTH BELOW SURFACE (FT)	INTERVAL (FT)	RECOVERY (FT)	SAMPLE #/TYPE	STANDARD PENETRATION TEST RESULTS 6"-6"-6"-6" (N)	SOIL DESCRIPTION: SOIL NAME, USCS GROUP SYMBOL, COLOR, MOISTURE CONTENT, RELATIVE DENSITY, OR CONSISTENCY, SOIL STRUCTURE, MINERALOGY.	COMMENTS: DEPTH OF CASING, DRILLING RATE, DRILLING FLUID LOSS, TESTS, AND INSTRUMENTATION. OVM (ppm): Headspace Analysis Time
365		Cuttings			Well graded sand (SW) dry fine-grained	
375						
385		Cuttings			Fine grained sand & silt (SP-SM) dry	
	387-395		Cuttings		Silt (ML) dry light tan	
395	398-405		Cuttings		Silty sand (SM)	End of 10/15/2000 1700 Begin 10/16/2000
405	405-420		Cuttings		Silty sand (SM) & Poorly graded sand (SP) fine-grained light tan dry	
415	420-425		Cuttings		Gravel sand silt clay mixture (GM-GC) moist fine gravels	

CH2MHILL

PROJECT NUMBER	BORING NUMBER
146631.BV.IC	ST-106 SB-27 SHEET 8 OF 9

SOIL BORING LOG

PROJECT : KAFB Bulk Fuels Facility (ST-106) LOCATION : 65' N & 55' W of E end of rack
ELEVATION : DRILLING CONTRACTOR WDC/Marion Phillips
DRILLING METHOD AND EQUIPMENT USED : SpeedStar 30K Stratex ARCH w/24" split spoon
WATER LEVELS : 483' bgl START : 10/11/2000 END: 10/21/2000 LOGGER : BJL

DEPTH BELOW SURFACE (FT)	INTERVAL (FT)	RECOVERY (FT)	SAMPLE #/TYPE	STANDARD PENETRATION TEST RESULTS 6"-6"-6"-6" (N)	SOIL DESCRIPTION: SOIL NAME, USCS GROUP SYMBOL, COLOR, MOISTURE CONTENT, RELATIVE DENSITY, OR CONSISTENCY, SOIL STRUCTURE, MINERALOGY.	COMMENTS: DEPTH OF CASING, DRILLING RATE, DRILLING FLUID LOSS, TESTS, AND INSTRUMENTATION. OVM (ppm): Headspace Analysis Time
425	425-430		Cuttings		Poorly graded sand (SP) fine-grained moist light tan	
435	440		Cuttings		S.A.A Wet	Wet
445	Cuttings				S.A.A Wet	Wet
	450		Cuttings		S.A.A Wet	Wet 1010
455	460-465		Cuttings		Poorly graded sand (SP) light tan dry	Dry
465	Cuttings				Silty clayey sandy gravel (GW-GM)	Wet 1035
	470-484		Cuttings		Poorly gradedsand (SP) dry	Dry
475						

CH2MHILL

PROJECT NUMBER	BORING NUMBER
146631.BV.IC	ST-106 SB-27 SHEET 9 OF 9

SOIL BORING LOG

PROJECT : KAFB Bulk Fuels Facility (ST-106) LOCATION : 65' N & 55' W of E end of rack
ELEVATION : DRILLING CONTRACTOR WDC/Marion Phillips
DRILLING METHOD AND EQUIPMENT USED : SpeedStar 30K Stratex ARCH w/24" split spoon
WATER LEVELS : 483' bgl START : 10/11/2000 END: 10/21/2000 LOGGER : BJL

DEPTH BELOW SURFACE (FT)	INTERVAL (FT)	RECOVERY (FT)	SAMPLE #/TYPE	STANDARD PENETRATION TEST RESULTS 6"-6"-6"-6" (N)	SOIL DESCRIPTION: SOIL NAME, USCS GROUP SYMBOL, COLOR, MOISTURE CONTENT, RELATIVE DENSITY, OR CONSISTENCY, SOIL STRUCTURE, MINERALOGY.	COMMENTS: DEPTH OF CASING, DRILLING RATE, DRILLING FLUID LOSS, TESTS, AND INSTRUMENTATION. OVM (ppm): Headspace Analysis Time
485	Cuttings				Gravely sand (SW) fine gravels wet	Wet 1150
	490		Cuttings		Well graded sand (SW) fine- to coarse-grained	
495	498-505		Cuttings		Gravelly sands (SW) wet fine gravels fine sand	Wet 1210 0 ppm VOC/PID on wet cuttings no odor
505			Cuttings GRO/DRO			
	510		Cuttings		S.A.A	**TD of borehole = 510' bgs @ 1800 on 10/16/2000**

CH2MHILL

PROJECT NUMBER	BORING NUMBER
146631.BV.IC	ST-106 SB-28 SHEET 1 OF 3

SOIL BORING LOG

PROJECT : KAFB Bulk Fuels Facility (ST-106) LOCATION : 105' E of E end of rack
ELEVATION : DRILLING CONTRACTOR EnviroDrill/D. Starns
DRILLING METHOD AND EQUIPMENT USED : CME-75 w/8"OD HSA & 18" slit spoon
WATER LEVELS : NA START : 11/15/2000 END: 11/27/00 LOGGER : BJL

DEPTH BELOW SURFACE (FT)	INTERVAL (FT)	RECOVERY (FT)	SAMPLE #/TYPE	STANDARD PENETRATION TEST RESULTS 6"-6"-6"-6" (N)	SOIL DESCRIPTION: SOIL NAME, USCS GROUP SYMBOL, COLOR, MOISTURE CONTENT, RELATIVE DENSITY, OR CONSISTENCY, SOIL STRUCTURE, MINERALOGY.	COMMENTS: DEPTH OF CASING, DRILLING RATE, DRILLING FLUID LOSS, TESTS, AND INSTRUMENTATION. OVM (ppm): Headspace Analysis Time
0	0-1		Cuttings		Silty Clay (CL) Brown moist	
	5		Cuttings		Lean clay (CL) light tan, moist, stiff	
	9		Cuttings		Transition to sandy silty clay (CL) Red-brown	
10	10-11.5	1.5	SS		Silty clay (CL) red-brown, trace fine-grained sand, moist	0.0 ppm VOC/PID 1150
	18		Cuttings		Transition to Lean clay (CL) brown moist	
20	20-21	1.0	SS	8-7-12	1" S.A. A. 17" Silty clay (CL) brown, moist, soft	0.0 ppm VOC/PID 1205
	25		Cuttings		Silty clay (CL) w/ trace of medium- to coarse-grained sand	
30	30-31.5	1.5	SS GRO/DRO	7-8-12	Silty Clay (CL) brown, firm, moist and Silt (ML) loose	0.0 ppm VOC/PID 1225
40	40-41.5	1.5	SS	7-13-18	Silty clay (CL) orange-brown moist stiff	0.0 ppm VOC/PID 1240
	48		Cuttings		Gravelly clay (CL)	
50	50-51	1.0	SS GRO/DRO		Silt (ML) Orange-brown moist soft	36 ppm VOC/PID 1315 slight odor

CH2MHILL

PROJECT NUMBER	BORING NUMBER
146631.BV.IC	ST-106 SB-28 SHEET 2 OF 3

SOIL BORING LOG

PROJECT : KAFB Bulk Fuels Facility (ST-106) LOCATION : 105' E of E end of rack
ELEVATION : DRILLING CONTRACTOR EnviroDrill/D. Stams
DRILLING METHOD AND EQUIPMENT USED : CME-75 w/8"OD HSA & 18" slit spoon
WATER LEVELS : NA START : 11/15/2000 END: 11/27/00 LOGGER : BJL

DEPTH BELOW SURFACE (FT)	INTERVAL (FT)	RECOVERY (FT)	SAMPLE #/TYPE	STANDARD PENETRATION TEST RESULTS 6"-6"-6"-6" (N)	SOIL DESCRIPTION: SOIL NAME, USCS GROUP SYMBOL, COLOR, MOISTURE CONTENT, RELATIVE DENSITY, OR CONSISTENCY, SOIL STRUCTURE, MINERALOGY.	COMMENTS: DEPTH OF CASING, DRILLING RATE, DRILLING FLUID LOSS, TESTS, AND INSTRUMENTATION. OVM (ppm): Headspace Analysis Time
60	60-61.5	1.5	SS GRO/DRO	11-15-18	Silt (ML) brown, loose, moist	42 ppm VOC/PID 1545 slight odor
70	70-71.5	1.5	SS GRO/DRO	18-30-46	3" Lean clay (CL) brown firm 10" poorly graded sand (SP) light brown, fine-grained, moist, loose 5" Silt (ML) Brown, loose, moist	358 ppm VOC/PID 1615 no odor
80	80-81.5	1.5	SS	17-22-29	Silt (ML) Brown, loose, stiff, moist	67 ppm VOC/PID 1645 no odor End of day 11/15/00 Begin 11/16/00
90	90-91.5	1.5	SS	23-23-23	Lean clay (CL) & Silty clay (CL) tan to brown, stiff	0 ppm VOC/PID 0850
100	100-101.5	1.5	SS GRO/DRO/VOC	9-16-17	Silt (ML) light brown, moist, loose	ppm VOC/PID 0935 2999 (max) no odor
110	110-111.5	1.5	SS GRO/DRO/VOC	14-34-41	Silt (ML) w/Lean clay (CL) layers, orange-brown	ppm VOC/PID 1620 2999 (max) 50% LEL in soil

CH2MHILL

PROJECT NUMBER	BORING NUMBER
146631.BV.IC	ST-106 SB-28 SHEET 3 OF 3

SOIL BORING LOG

PROJECT : KAFB Bulk Fuels Facility (ST-106) LOCATION : 105' E of E end of rack
ELEVATION : DRILLING CONTRACTOF EnviroDrill/D. Starns
DRILLING METHOD AND EQUIPMENT USED : CME-75 w/8"OD HSA & 18" slit spoon
WATER LEVELS : NA START : 11/15/2000 END: 11/27/00 LOGGER : BJL

DEPTH BELOW SURFACE (FT)	INTERVAL (FT)	RECOVERY (FT)	SAMPLE #/TYPE	STANDARD PENETRATION TEST RESULTS 6"-6"-6"-6" (N)	SOIL DESCRIPTION: SOIL NAME, USCS GROUP SYMBOL, COLOR, MOISTURE CONTENT, RELATIVE DENSITY, OR CONSISTENCY, SOIL STRUCTURE, MINERALOGY.	COMMENTS: DEPTH OF CASING, DRILLING RATE, DRILLING FLUID LOSS, TESTS, AND INSTRUMENTATION. OVM (ppm): Headspace Analysis Time
120	120-121.5	1.5	SS	10-10-15	Silty clay (CL) & Lean clay (CL) red-brown stiff moist	no odor End of day 11/16/00 Begin 11/17/00
130	130-131	1.0	SS GRO?DRO	22-50-54	Poorly graded sand (SP) loose, fine-grained, moist	13.2 ppm VOC/PID 0915 faint odor
140	140-141	1.0	SS		Well-graded sand (SW) fine- to coarse-grained, dry	8.1 ppm VOC/PID 0955 faint acetone odor End of day 1/25 Begin 1/26
150	150-151.5	1.5	SS		Well graded silty sand (SW-SM) pumice chips	4.1 ppm VOC/PID 1040 no odor
	150-156		Cuttings		Gravels	
160	160-160.5	0.5	SS GRO/DRO/VOC	60/6	Poorly graded sand (SP) light tan, moist, fine-grained	0.9 ppm VOC/PID 1220 faint odor
170	170-171	1.0	SS	40-54-x	Poorly-graded sand (SP) light tan, fine-grained, moist TD = 170' bgs	2.5 ppm VOC/PID 1425 faint odor

CH2MHILL

PROJECT NUMBER	BORING NUMBER
146631.BV.IC	ST-106 SB-28A SHEET 1 OF 6

SOIL BORING LOG

PROJECT : KAFB Bulk Fuels Facility (ST-106) LOCATION : 105' E & 15' S of E end of rack (15' S of SB-2
ELEVATION : DRILLING CONTRACTOR THF/Altion Schoonmaker
DRILLING METHOD AND EQUIPMENT USED : Schram T660W Rotodrill on Ford L9000 w/18" slit spoon
WATER LEVELS : NA START : 02/12/2001 END: 02/20/2001 LOGGER : BJL

DEPTH BELOW SURFACE (FT)	INTERVAL (FT)	RECOVERY (FT)	SAMPLE #/TYPE	STANDARD PENETRATION TEST RESULTS 6"-6"-6"-6" (N)	SOIL DESCRIPTION: SOIL NAME, USCS GROUP SYMBOL, COLOR, MOISTURE CONTENT, RELATIVE DENSITY, OR CONSISTENCY, SOIL STRUCTURE, MINERALOGY.	COMMENTS: DEPTH OF CASING, DRILLING RATE, DRILLING FLUID LOSS, TESTS, AND INSTRUMENTATION. OVM (ppm): Headspace Analysis Time
0	0' - 10'	Cuttings			Clayey fine sand (ML) orange-brown, moist	
10	10' - 20'	Cuttings			S. A. A.	
20	20' 30'	Cuttings Cuttings			Silty sand (ML) orange-brown, fine-grained sand, moist Lean clay (CL)orange-brown moist soft	
30	30' - 40'	Cuttings			Silts (ML) and Lean clays (CL)	
40	40' - 50'	Cuttings			Silts (ML) orange-brown moist	
50	50' - 60'	Cuttings			Silts (ML) and Clays (CL) Orange-brown moist	

CH2MHILL

PROJECT NUMBER	BORING NUMBER
146631.BV.IC	ST-106 SB-28A SHEET 2 OF 6

SOIL BORING LOG

PROJECT : KAFB Bulk Fuels Facility (ST-106) LOCATION : 105' E & 15' S of E end of rack (15' S of SB-2
ELEVATION : DRILLING CONTRACTOR THF/Altion Schoonmaker
DRILLING METHOD AND EQUIPMENT USED : Schram T660W Rotodrill on Ford L9000 w/18" slit spoon
WATER LEVELS : NA START : 02/12/2001 END: 02/20/2001 LOGGER : BJL

DEPTH BELOW SURFACE (FT)	INTERVAL (FT)	RECOVERY (FT)	SAMPLE #/TYPE	STANDARD PENETRATION TEST RESULTS 6"-6"-6"-6" (N)	SOIL DESCRIPTION: SOIL NAME, USCS GROUP SYMBOL, COLOR, MOISTURE CONTENT, RELATIVE DENSITY, OR CONSISTENCY, SOIL STRUCTURE, MINERALOGY.	COMMENTS: DEPTH OF CASING, DRILLING RATE, DRILLING FLUID LOSS, TESTS, AND INSTRUMENTATION. OVM (ppm): Headspace Analysis Time
60	60' - 70'	Cuttings			Clayey fine sand (ML) orange moist	
70	70' - 80'	Cuttings			S. A. A.	
80	80' - 90'	Cuttings			S. A. A.	
90	90' - 110	Cuttings			Poorly graded sand (SP) light tan, fine-grained, moist sugar sand	
100	100' - 110	Cuttings			S. A. A.	
110	110' - 120	Cuttings			Lean clay (CL) brown moist	

CH2MHILL

PROJECT NUMBER	BORING NUMBER
146631.BV.IC	ST-106 SB-28A SHEET 3 OF 6

SOIL BORING LOG

PROJECT : KAFB Bulk Fuels Facility (ST-106) LOCATION : 105' E & 15' S of E end of rack (15' S of SB-2

ELEVATION : DRILLING CONTRACTOF THF/Altion Schoonmaker

DRILLING METHOD AND EQUIPMENT USED : Schram T660W Rotodrill on Ford L9000 w/18" slit spoon

WATER LEVELS : NA START : 02/12/2001 END: 02/20/2001 LOGGER : BJL

DEPTH BELOW SURFACE (FT)	INTERVAL (FT)	RECOVERY (FT)	SAMPLE #/TYPE	STANDARD PENETRATION TEST RESULTS 6"-6"-6"-6" (N)	SOIL DESCRIPTION: SOIL NAME, USCS GROUP SYMBOL, COLOR, MOISTURE CONTENT, RELATIVE DENSITY, OR CONSISTENCY, SOIL STRUCTURE, MINERALOGY.	COMMENTS: DEPTH OF CASING, DRILLING RATE, DRILLING FLUID LOSS, TESTS, AND INSTRUMENTATION. OVM (ppm): Headspace Analysis Time
120	120' - 135	Cuttings			Lean Clay (CL) and Silts (ML) Brown moist	
130	130' - 140	Cuttings			Poorly graded sand (SP) loose, fine-grained, moist	
	135' - 140	Cuttings			Poorly graded sand (SP) light tan, dry sugar sand	Acetone odor at 135' bgs
140	140' - 150	Cuttings			Silty Sand (SM) tan-orange, moist	Acetone odor End of day 2-12-01 Begin new day 2-13-01
150	150' - 157	Cuttings			Clayey fine sands (ML) moist	Acetone odor
	157' - 162'				Alternating Poorly Graded Sands (SP) light tan, dry fine-grained, and Lean to Silty Clays (CL) brown moist soft	
160	162' - 168	Cuttings			Poorly & Well-graded Sands (SP/SW) no fines.	
	168' - 170	Cuttings			Sandy Clayu (CL)	Acetone odor in clays
170	170-170.5	0.5	SS	18-70/6	Well graded sand (SW) Fine- to coarse-grained. Coarse-grained sand is limestone and pumice	185 ppm VOC/PID 1010
	178'	Cuttings			Poorly graded sand (SP) Wet	Wet

CH2MHILL

PROJECT NUMBER	BORING NUMBER
146631.BV.IC	ST-106 SB-28A SHEET 4 OF 6

SOIL BORING LOG

PROJECT : KAFB Bulk Fuels Facility (ST-106) LOCATION : 105' E & 15' S of E end of rack (15' S of SB-2
ELEVATION : DRILLING CONTRACTOR THF/Altion Schoonmaker
DRILLING METHOD AND EQUIPMENT USED : Schram T660W Rotodrill on Ford L9000 w/18" slit spoon
WATER LEVELS : NA START : 02/12/2001 END: 02/20/2001 LOGGER : BJL

DEPTH BELOW SURFACE (FT)	INTERVAL (FT)	RECOVERY (FT)	SAMPLE #/TYPE	STANDARD PENETRATION TEST RESULTS 6"-6"-6"-6" (N)	SOIL DESCRIPTION: SOIL NAME, USCS GROUP SYMBOL, COLOR, MOISTURE CONTENT, RELATIVE DENSITY, OR CONSISTENCY, SOIL STRUCTURE, MINERALOGY.	COMMENTS: DEPTH OF CASING, DRILLING RATE, DRILLING FLUID LOSS, TESTS, AND INSTRUMENTATION. OVM (ppm): Headspace Analysis Time
180	180-181	1.0	SS GRO/DRO	30-70/6	S. A. A. moist	25 ppm VOC/PID Moist
190	190-190.5	0.5	SS GRO/DRO	18-30	Poorly graded sand (SP) light tan, loose, moist	40.2 ppm VOC/PID 1130
200	200-200.5	0.5	SS GRO/DRO		Poorly graded sand (SW) very fine-grained	40.6 ppm VOC/PID 1205
210	210-211	1.00	SS	4-29-15/3	Poorly graded gravels (GP) fine gravel, and Poorly graded sand (SP) fine, loose	14 ppm VOC/PID 1310
220	220-220.5	0.5	SS GRO/DRO	6-96/6	Poorly graded sand (SP) light tan, dry, fine-grained	786 ppm VOC/PID 1535 odor is unlike the previous acetone odor
230	230-230.5	0.5	SS GRO/DRO	8-80/6	gravel-sand-silt mixture (GM) light tan fines, limestone & granitic rocks upto 3-cm, dry	78 ppm VOC/PID 1645 faint odor End of day 2-13-01 Begin day 2-14-01

CH2MHILL

PROJECT NUMBER	BORING NUMBER
146631.BV.IC	ST-106 SB-28A SHEET 5 OF 6

SOIL BORING LOG

PROJECT : KAFB Bulk Fuels Facility (ST-106) LOCATION : 105' E & 15' S of E end of rack (15' S of SB-2
ELEVATION : DRILLING CONTRACTOR THF/Altion Schoonmaker
DRILLING METHOD AND EQUIPMENT USED : Schram T660W Rotodrill on Ford L9000 w/18" slit spoon
WATER LEVELS : NA START : 02/12/2001 END: 02/20/2001 LOGGER : BJL

DEPTH BELOW SURFACE (FT)	INTERVAL (FT)	RECOVERY (FT)	SAMPLE #/TYPE	STANDARD PENETRATION TEST RESULTS 6"-6"-6"-6" (N)	SOIL DESCRIPTION: SOIL NAME, USCS GROUP SYMBOL, COLOR, MOISTURE CONTENT, RELATIVE DENSITY, OR CONSISTENCY, SOIL STRUCTURE, MINERALOGY.	COMMENTS: DEPTH OF CASING, DRILLING RATE, DRILLING FLUID LOSS, TESTS, AND INSTRUMENTATION. OVM (ppm): Headspace Analysis Time
240	240-241.5	1.5	SS	160/4	Poorly Graded Gravel (GP) uniformly about 5-mm (Probably drill cuttings that weren't cleaned out of casing very well).	65 ppm VOC/PID 1345 End of day 2-14-01 Begin day 2-19-01
250	250-251	1.0	SS GRO/DRO	28-70/6	Poorly graded sand (SP) packed, fine-grained, moist	934 ppm VOC/PID 1215
260	260-261	1.0	SS GRO/DRO	8-50-19/3	Poorly graded sand (SP) grey-tan, alternating layers of silica sands fine-grained silica sands and medium-grained pumice	434 ppm VOC/PID 1250
	265	Cuttings			Silty Sand (SM) brown moist coarse-grined	Strong odor in cuttings
270	270-271.5	1.50	SS GRO/DRO/VOC/SVOC	20-18-10/3	Lean Clay (CL) brown, moist, very stiff	200 ppm VOC/PID 1330
	279	Cuttings			**Transition** from clay to sand	
280	280-281	1.0	SS	120/9	Silty sand (SM) light tan, moist	24 ppm VOC/PID 1430
290		No Recovery Cuttings			Silty Sand (SM) fine-graind sand, dry	

CH2MHILL

PROJECT NUMBER	BORING NUMBER
146631.BV.IC	ST-106 SB-28A SHEET 6 OF 6

SOIL BORING LOG

PROJECT : KAFB Bulk Fuels Facility (ST-106) LOCATION : 105' E & 15' S of E end of rack (15' S of SB-2
ELEVATION : DRILLING CONTRACTOR THF/Altion Schoonmaker
DRILLING METHOD AND EQUIPMENT USED : Schram T660W Rotodrill on Ford L9000 w/18" slit spoon
WATER LEVELS : NA START : 02/12/2001 END: 02/20/2001 LOGGER : BJL

DEPTH BELOW SURFACE (FT)	INTERVAL (FT)	RECOVERY (FT)	SAMPLE #/TYPE	STANDARD PENETRATION TEST RESULTS 6"-6"-6"-6" (N)	SOIL DESCRIPTION: SOIL NAME, USCS GROUP SYMBOL, COLOR, MOISTURE CONTENT, RELATIVE DENSITY, OR CONSISTENCY, SOIL STRUCTURE, MINERALOGY.	COMMENTS: DEPTH OF CASING, DRILLING RATE, DRILLING FLUID LOSS, TESTS, AND INSTRUMENTATION. OVM (ppm): Headspace Analysis Time
300	300-301	1.0	SS GRO/DRO	30-100	Silty Sand (SM) Light tan, loose dry fine-grained sand	12.1 ppm VOC/PID 1602
	308		Cuttings		Silty sand (SM) yellow moist	
310	310-311	1.0	SS GRO/DRO	16-16-26	Poorly graded gravel (GP) fine limestone & granitic gravel, dry	1.1 ppm VOC/PID 1645
						End of day 2-19-01 Begin day 2-20-01
320	320-321	1.0	SS GRO/DRO/VOC/SVOC	30-80/3	Well-graded sand (SW) silt to medium-grained, dry, loose	0.0 ppm VOC/PID 905
	328		Cuttings		Cemented gravels	
330	330-331.5	1.50	SS GRO/DRO/BTEX	08/15/2007	Lean clay (CL) brown, moist, medium stiff	57.1 ppm VOC/PID 1030
	332		Cuttings		**Transition** from lean clay (CL) to silt (ML)	
	336		Cuttings		Silt (ML) grey-tan, dry, 2-inch cemented zones	
340	340-340		SS GRO/DRO	9-39-100/4	Well-graded sand (WP) tan, moist, silt to medium-grained sand, 2" of well cemented sand or sandstone at 340' bgs	0.0 ppm VOC/PID 1225
					TD of Borehole 340' bgs	

CH2MHILL

PROJECT NUMBER	BORING NUMBER
146631.BV.IC	ST-106 SB-29 SHEET 1 OF 7

SOIL BORING LOG

PROJECT : KAFB Bulk Fuels Facility (ST-106) LOCATION : 66' south of center of rack
ELEVATION : DRILLING CONTRACTOR EnviroDrill/ D.Starns
DRILLING METHOD AND EQUIPMENT USED : CME-75 w/ 18" split spoon
WATER LEVELS : NA START : 11/27/2000 END: 11/30/2000 LOGGER : BJL

DEPTH BELOW SURFACE (FT)	INTERVAL (FT)	RECOVERY (FT)	SAMPLE #/TYPE	STANDARD PENETRATION TEST RESULTS 6"-6"-6"-6" (N)	SOIL DESCRIPTION: SOIL NAME, USCS GROUP SYMBOL, COLOR, MOISTURE CONTENT, RELATIVE DENSITY, OR CONSISTENCY, SOIL STRUCTURE, MINERALOGY.	COMMENTS: DEPTH OF CASING, DRILLING RATE, DRILLING FLUID LOSS, TESTS, AND INSTRUMENTATION. OVM (ppm): Headspace Analysis	Time
0	0-0					11/27/2000	
10	10-10.2	0.2	SS	13-12-9	Silty Sand (SM) red-brown, moist, stiff	0 ppm VOC/PID	1300
20	20-21.5	1.5	SS	15-11-8	Silt (ML) Orange-tan, dry, hard (discs in spoon	0 ppm VOC/PID	1307
30	30-31	1.0	SS	18-13-12	S. A. A.	0 ppm VOC/PID	1327
40	40-41.5	1.5	SS	10-13-25	Silt (ML) Orange-tan, dry, loose	0 ppm VOC/PID	1350
50	50-51	1.0	SS	20-26-24	Silt (ML) Orange-tan, dry, hard (discs in spoon)	0 ppm VOC/PID	1410

CH2MHILL

PROJECT NUMBER	BORING NUMBER
146631.BV.IC	ST-106 SB-29 SHEET 2 OF 7

SOIL BORING LOG

PROJECT : KAFB Bulk Fuels Facility (ST-106) LOCATION : 66' south of center of rack
ELEVATION : DRILLING CONTRACTOR EnviroDrill/ D.Stams
DRILLING METHOD AND EQUIPMENT USED : CME-75 w/ 18" split spoon
WATER LEVELS : NA START : 11/27/2000 END: 11/30/2000 LOGGER : BJL

DEPTH BELOW SURFACE (FT)	INTERVAL (FT)	RECOVERY (FT)	SAMPLE #/TYPE	STANDARD PENETRATION TEST RESULTS 6"-6"-6"-6" (N)	SOIL DESCRIPTION: SOIL NAME, USCS GROUP SYMBOL, COLOR, MOISTURE CONTENT, RELATIVE DENSITY, OR CONSISTENCY, SOIL STRUCTURE, MINERALOGY.	COMMENTS: DEPTH OF CASING, DRILLING RATE, DRILLING FLUID LOSS, TESTS, AND INSTRUMENTATION. OVM (ppm): Headspace Analysis Time
60	60-61	1.0	SS	25-28-50	Silt (ML) w/ gravel & clay, orange-tan, moist, stiff, 1" layer of Poorly graded sand (SP) loose, dry	0 ppm VOC/PID 1455
70	70-71.5	1.5	SS	10-16-17	Silt (ML) & Silty sand (SM) orange -brown to orange-tan moist stiff	15.2 ppm VOC/PID
80	80-81.5	1.5	SS	22-22-26	Silt (ML) orange-brown moist firm	22 ppm VOC/PID 1525 no odor End of day 1/27/1 Begin 1/28/1
90	90-91.5	1.5	SS GRO/DRO	15-17-30	6" Silt (ML) red-brown dry hard 12" Silty sand (SM) Orange-tan loose dry white ash chips	80 ppm VOC/PID 0800
100	100-101.5	1.5	SS GRO/DRO	17-24-43	Silty sand (SM) w/white ash chips (S. A. A.)	117 ppm VOC/PID
110	110-111.5	1.5	SS GRO/DRO/VOC/SVOC	11-13-14	Silt (ML) orange-tan moist loose, and Lean clay (CL) red-brown moist stiff, in 3" layers.	2500 ppm VOC/PID 0920 VOC odor
	116		Cuttings		Gravels	

CH2MHILL

PROJECT NUMBER	BORING NUMBER
146631.BV.IC	ST-106 SB-29 SHEET 3 OF 7

SOIL BORING LOG

PROJECT : KAFB Bulk Fuels Facility (ST-106) LOCATION : 66' south of center of rack
ELEVATION : DRILLING CONTRACTOR EnviroDrill/ D.Starns
DRILLING METHOD AND EQUIPMENT USED : CME-75 w/ 18" split spoon
WATER LEVELS : NA START : 11/27/2000 END: 11/30/2000 LOGGER : BJL

DEPTH BELOW SURFACE (FT)	INTERVAL (FT)	RECOVERY (FT)	SAMPLE #/TYPE	STANDARD PENETRATION TEST RESULTS 6"-6"-6"-6" (N)	SOIL DESCRIPTION: SOIL NAME, USCS GROUP SYMBOL, COLOR, MOISTURE CONTENT, RELATIVE DENSITY, OR CONSISTENCY, SOIL STRUCTURE, MINERALOGY.	COMMENTS: DEPTH OF CASING, DRILLING RATE, DRILLING FLUID LOSS, TESTS, AND INSTRUMENTATION. OVM (ppm): Headspace Analysis Time
120	120-121.5	1.5	SS GRO/DRO	18-18-18	Silty Clay (CL) light brown, moist stiff	250 ppm VOC/PID 1005
130	130-131.5	1.5	SS	23-50	6" Silty clay (CL) Brown moist soft 12" Silty sand (SM) loose light tan dry	169 ppm VOC/PID 1135
140	140-141.5	1.5	SS	15-21-47	Silty clay (CL) light brown, moist, stiff	398 ppm VOC/PID Solvent odor End of day 1/25 Begin 1/26
150	50-150.2	0.25	SS	24-50/3	Poorly graded sand (SP) light grey, loose, dry, fine-grained	754 ppm VOC/PID 1440 very slight odor
160	160-161.5	1.5	SS GRO/DRO/BTEX	19-34-48	Silt (ML) grey-tan, loose, dry	2999 ppm VOC/PID 1530 no odor!
170	170-171.5 172	1.5	SS Cuttings	NA	Well graded sand (SW) medium to silt, loose moist Trace of gravel	2009 ppm VOC/PID 1620 no odor!

CH2MHILL

PROJECT NUMBER	BORING NUMBER
146631.BV.IC	ST-106 SB-29 SHEET 4 OF 7

SOIL BORING LOG

PROJECT : KAFB Bulk Fuels Facility (ST-106) LOCATION : 66' south of center of rack
ELEVATION : DRILLING CONTRACTOR EnviroDrill/ D.Starns
DRILLING METHOD AND EQUIPMENT USED : CME-75 w/ 18" split spoon
WATER LEVELS : NA START : 11/27/2000 END: 11/30/2000 LOGGER : BJL

DEPTH BELOW SURFACE (FT)	INTERVAL (FT)	RECOVERY (FT)	SAMPLE #/TYPE	STANDARD PENETRATION TEST RESULTS 6"-6"-6"-6" (N)	SOIL DESCRIPTION: SOIL NAME, USCS GROUP SYMBOL, COLOR, MOISTURE CONTENT, RELATIVE DENSITY, OR CONSISTENCY, SOIL STRUCTURE, MINERALOGY.	COMMENTS: DEPTH OF CASING, DRILLING RATE, DRILLING FLUID LOSS, TESTS, AND INSTRUMENTATION. OVM (ppm): Headspace Analysis Time
180	180-181.5	1.5	SS	8-28-50	Well graded sand (SW) moist, firmly packed 3" Lean clay (CL) brown moist stiff	130 ppm VOC/PID 1700 End of day 1/28/1 Begin 1/29/1
190	190-191.5	1.5	SS	22-38-42	Well graded sand (SW) medium to fine grained sand w/silt, loose, dry quartz, feldspar, dark minerals	8.5 ppm VOC/PID 0835
200	200-201	1.0	SS	28-50	Well graded gravels (GW) to fine sand moist to wet	6.9 ppm VOC/PID 0915 no odor no cuttings returned (Clays?)
210	210-211.5	1.5	SS GRO/DRO	22-38-48	Poorly graded sand (SP) light tan, moist, loose, fine grained	6.5 ppm VOC/PID 1035 no odor
220	220-221.5 228	1.5	SS GRO/DRO/BTEX	15-17-45	2" Poorly graded sand (SP) light grey-tan, dry loose, fine-grained 12" Well graded sand (SW) coarse-fine grained, well rounded ash-fall/pumice w/ yellow staining 2" Silt (ML) Gravels not returned to surface	345 ppm VOC/PID 1115 slight odor yellow staining
230	230-231.5 238	1.5	SS GRO/DRO cuttings	7-16-22	3" Well graded sand (SW) fine-grained to silt w/white pumice 15" Silty clay (CL) grey-tan, stiff moist w/ yellow staining	354 ppm VOC/PID 1230 slight odor yellow staining 2" limestone gravels

CH2MHILL

PROJECT NUMBER	BORING NUMBER
146631.BV.IC	ST-106 SB-29 SHEET 5 OF 7

SOIL BORING LOG

PROJECT : KAFB Bulk Fuels Facility (ST-106) LOCATION : 66' south of center of rack
ELEVATION : DRILLING CONTRACTOR EnviroDrill/ D.Starns
DRILLING METHOD AND EQUIPMENT USED : CME-75 w/ 18" split spoon
WATER LEVELS : NA START : 11/27/2000 END: 11/30/2000 LOGGER : BJL

DEPTH BELOW SURFACE (FT)	INTERVAL (FT)	RECOVERY (FT)	SAMPLE #/TYPE	STANDARD PENETRATION TEST RESULTS 6"-6"-6"-6" (N)	SOIL DESCRIPTION: SOIL NAME, USCS GROUP SYMBOL, COLOR, MOISTURE CONTENT, RELATIVE DENSITY, OR CONSISTENCY, SOIL STRUCTURE, MINERALOGY.	COMMENTS: DEPTH OF CASING, DRILLING RATE, DRILLING FLUID LOSS, TESTS, AND INSTRUMENTATION. OVM (ppm): Headspace Analysis Time
240	240-241.5	1.5	SS GRO/DRO/VOC	25-40-35	Well graded sand (SW) coarse-grained sand to silt, granite mix, dry loose	21.4 ppm VOC/PID 1400
250	250-251.5	1.5	SS		S. A. A. plus white pumice	82 ppm VOC/PID 1500
260	260-261.5	1.5	SS		5" S. A. A. 12" Lean Clay (CL) greenich brown moist very stiff 1" Well graded sand (SW) goarse- to fine-grained, dry loose w/ white pumice	79.0 ppm VOC/PID 1550 slight odor End of day 11/29/00 Begin day 11/30/00 Clays not returned to surface Auger seizing, end of borehole
270					**TD Borehole SB-29 = 272' bgs**	
280					Borehole SB-29A was drilled as a continuation of SB-29 so that samples could be collected from as deep as 300' bgs. SB-29 A is 20' West of SB-29	
290						

CH2MHILL

PROJECT NUMBER	BORING NUMBER
146631.BV.IC	ST-106 SB-29A SHEET 6 OF 7

SOIL BORING LOG

PROJECT : KAFB Bulk Fuels Facility (ST-106) LOCATION : 66' south & 20' W of center of rack
ELEVATION : DRILLING CONTRACTOR THF/Alton Schoonmaker
DRILLING METHOD AND EQUIPMENT USED : Schram T660W ARCH on Ford L9000 w/18" split spoon
WATER LEVELS : NA START : 02/26/2001 End: 02/27/01 LOGGER : BJL

DEPTH BELOW SURFACE (FT)	INTERVAL (FT)	RECOVERY (FT)	SAMPLE #/TYPE	STANDARD PENETRATION TEST RESULTS 6"-6"-6" (N)	SOIL DESCRIPTION: SOIL NAME, USCS GROUP SYMBOL, COLOR, MOISTURE CONTENT, RELATIVE DENSITY, OR CONSISTENCY, SOIL STRUCTURE, MINERALOGY.	COMMENTS: DEPTH OF CASING, DRILLING RATE, DRILLING FLUID LOSS, TESTS, AND INSTRUMENTATION. OVM (ppm): Headspace Analysis	Time
240	240-241.5	1.5	SS	24-41-50/3	Well Graded Sand (SW) Coarse-grained sand to silt, granite mix, dry, loose	11 ppm VOC/PID	1340
250	250-251.5	1.5	SS GRO/DRO	20-40-25/3	S.A.A. w/ white pumice, basalt, and sandstone rocks upto 4-cm	75.8 ppm VOC/PID	1415
260	260-261.5	1.5 Cuttings	SS GRO/DRO/VOC	20-40-20/3	8" Silty Sand (SM) Lt. Brown moist, well packe 8" Lean Clay (CL) brown, moist, stiff Clay is about 8 feet thick	350.0 ppm VOC/PID	1520
270	270-271.5	1.5	SS GRO/DRO	13-20-30	Gravel sand silt mixture (GM) Loose, upto 2-cm gravels	0.6 ppm VOC/PID End of Day 2-26 Begin 2-27	1625
280	280-281.5	1.5	SS	11-80/6	Poorly graded gravel (GP) upto 5-cm well rounded. Volcanic, metamorphic, & limestone rocks	0 ppm VOC/PID	1445
290	290-291.5	1.5	SS GRO/DRO/BTEX	10-100/7	Poorly-graded sand (SP) Light tan, moist, loose with gravels upto 2-cm	0.5 ppm VOC/PID	1530

CH2MHILL

PROJECT NUMBER	BORING NUMBER
146631.BV.IC	ST-106 SB-29A SHEET 7 OF 7

SOIL BORING LOG

PROJECT : KAFB Bulk Fuels Facility (ST-106) LOCATION : 66' south & 20' W of center of rack
ELEVATION : DRILLING CONTRACTOR THF/Alton Schoonmaker
DRILLING METHOD AND EQUIPMENT USED : Schram T660W ARCH on Ford L9000 w/18" split spoon
WATER LEVELS : NA START : 02/26/2001 End: 02/27/01 LOGGER : BJL

DEPTH BELOW SURFACE (FT)	INTERVAL (FT)	RECOVERY (FT)	SAMPLE #/TYPE	STANDARD PENETRATION TEST RESULTS 6"-6"-6"-6" (N)	SOIL DESCRIPTION: SOIL NAME, USCS GROUP SYMBOL, COLOR, MOISTURE CONTENT, RELATIVE DENSITY, OR CONSISTENCY, SOIL STRUCTURE, MINERALOGY.	COMMENTS: DEPTH OF CASING, DRILLING RATE, DRILLING FLUID LOSS, TESTS, AND INSTRUMENTATION. OVM (ppm): Headspace Analysis Time
300	300-300.5	0.5	SS GRO/DRO	15-225/6	Silty Gravels (GM) dry metamorphic rocks **TD Borehole SB-29A = 302' bgs**	0 ppm VOC/PID 1657 End of day 02/27/00
310						
320						
330						
340						
350						

CH2MHILL

PROJECT NUMBER	BORING NUMBER
146631.BV.IC	ST-106 SB-30 SHEET 1 OF 6

SOIL BORING LOG

PROJECT : KAFB Bulk Fuels Facility (ST-106) LOCATION : 100' W & 15' N of W end of rack
ELEVATION : DRILLING CONTRACTOR THF/ Alton Schoomaker
DRILLING METHOD AND EQUIPMENT USED : Schram T660W Rotodrill 9" ARCH on Ford L9000 w/ 18" split spoon
WATER LEVELS : NA START : 01/24/2001 END: 02/02/2001 LOGGER : BJL

DEPTH BELOW SURFACE (FT)	INTERVAL (FT)	RECOVERY (FT)	SAMPLE #/TYPE	STANDARD PENETRATION TEST RESULTS 6"-6"-6"-6" (N)	SOIL DESCRIPTION: SOIL NAME, USCS GROUP SYMBOL, COLOR, MOISTURE CONTENT, RELATIVE DENSITY, OR CONSISTENCY, SOIL STRUCTURE, MINERALOGY.	COMMENTS: DEPTH OF CASING, DRILLING RATE, DRILLING FLUID LOSS, TESTS, AND INSTRUMENTATION. OVM (ppm): Headspace Analysis Time
0	0-0		Cuttings		Silty Clay (CL) Brown moist	ppm VOC/PID
			Cuttings		Silt (ML) Orange Moist	
10	10-11	1.0	SS	16-18-24	6" Silt (ML) SAA 6" Lean Clay(CL) Brown Soft Moist	0.3 ppm VOC/PID 1230
			Cuttings		Clayey Silt (CL)	
20	20-21	1.0	SS	22-26-30	Silt (ML) Orange moist cohesive	0.2 ppm VOC/PID 1305
30	30-31	1.0	SS	25-35-50/4	Silty Clay (CL) Stiff moist orange w/ tan cemented clods	0.2 ppm VOC/PID 1330
40	40-41	1.0	SS GRO/DRO	14-16-23	Silt (ML) and Clayey Silt (CL) orange moist firm	0.6 ppm VOC/PID 1405 no odor
50	50-51	1.0	SS	18-45-45	Sandy Silt (SM) Orange silt w10% c.g. sand dry loose	1.4 ppm VOC/PID 1505 no odor

CH2MHILL

PROJECT NUMBER	BORING NUMBER
146631.BV.IC	ST-106 SB-30 SHEET 2 OF 6

SOIL BORING LOG

PROJECT : KAFB Bulk Fuels Facility (ST-106) LOCATION : 100' W & 15' N of W end of rack
ELEVATION : DRILLING CONTRACTOR THF/ Alton Schoomaker
DRILLING METHOD AND EQUIPMENT USED : Schram T660W Rotodrill 9" ARCH on Ford L9000 w/ 18" split spoon
WATER LEVELS : NA START : 01/24/2001 END: 02/02/2001 LOGGER : BJL

DEPTH BELOW SURFACE (FT)	INTERVAL (FT)	RECOVERY (FT)	SAMPLE #/TYPE	STANDARD PENETRATION TEST RESULTS 6"-6"-6"-6" (N)	SOIL DESCRIPTION: SOIL NAME, USCS GROUP SYMBOL, COLOR, MOISTURE CONTENT, RELATIVE DENSITY, OR CONSISTENCY, SOIL STRUCTURE, MINERALOGY.	COMMENTS: DEPTH OF CASING, DRILLING RATE, DRILLING FLUID LOSS, TESTS, AND INSTRUMENTATION. OVM (ppm): Headspace Analysis Time
60	60-61	1.0	SS	31-65	Silt (ML) orange w/caliche chips & 1" layer of well graded sand (SW) Dry loose	14.2 ppm VOC/PID 1530
70	70-70.5	0.5	SS	31-75	Silty Clay (CL) light brown, hard dry	0 ppm VOC/PID 1700
			Cuttings		Silt (ML) Orange	End of day 1/24/1 Begin 1/25/1
80	80-80.5	0.5	SS	39-76	Silty Clay (CL) orange hard dry	1.8 ppm VOC/PID 1510
90	No recovery		Cuttings	12-9-30	Well graded sand (SW) light tan, fine to very fine grained, tr. Medium sand dry loose	NA ppm VOC/PID 1530
			Cuttings		Volcanic ash at about 95 ' bgs	
100	100-101	1.0	SS	50-50/2	Silt (ML) w/medium sand-sized vocanic ash	11.8 ppm VOC/PID 1600
110	110-111	1.0	SS GRO/DRO/VOC	27-34-50/4	Silty clay (CL) Orange firm moist	110 ppm VOC/PID 1620

CH2MHILL

PROJECT NUMBER	BORING NUMBER
146631.BV.IC	ST-106 SB-30 SHEET 3 OF 6

SOIL BORING LOG

PROJECT : KAFB Bulk Fuels Facility (ST-106) LOCATION : 100' W & 15' N of W end of rack
ELEVATION : DRILLING CONTRACTOR THF/ Alton Schoomaker
DRILLING METHOD AND EQUIPMENT USED : Schram T660W Rotodrill 9" ARCH on Ford L9000 w/ 18" split spoon
WATER LEVELS : NA START : 01/24/2001 END: 02/02/2001 LOGGER : BJL

DEPTH BELOW SURFACE (FT)	INTERVAL (FT)	RECOVERY (FT)	SAMPLE #/TYPE	STANDARD PENETRATION TEST RESULTS 6"-6"-6"-6" (N)	SOIL DESCRIPTION: SOIL NAME, USCS GROUP SYMBOL, COLOR, MOISTURE CONTENT, RELATIVE DENSITY, OR CONSISTENCY, SOIL STRUCTURE, MINERALOGY.	COMMENTS: DEPTH OF CASING, DRILLING RATE, DRILLING FLUID LOSS, TESTS, AND INSTRUMENTATION. OVM (ppm): Headspace Analysis	Time
120	120-121.5	1.5	SS	32-37-50/5	Lean clay (CL) dark brown hard moist	20.8 ppm VOC/PID	1650
	124		Cuttings		**Transition** Poorly graded sand (SP) light tan, fine-grained dry loose		1711
130	130-130.5	0.5	SS	37-50/4	Poorly graded sand (SP) Light tan, dry, loose, medium-grained w/ trace of fine- and coarse-grained sand	0 ppm VOC/PID	1725
140	140-140.5	0.5	SS	34-43-54	Silt (ML) orange moist firm	0 ppm VOC/PID	1750
						End of day 1/25 Begin 1/26	
150	150-151	1.0	SS	7-10-36	Well graded sand (SW) fine- to coarse-grained, dry, loose	0 ppm VOC/PID	0812
160	160-161.5	1.5	SS GRO/DRO/VOC	56/6	Poorly graded sand (SP) light tan, dry, fine-grained	3.6 ppm VOC/PID no odor	0914
	163		Cuttings		Lean clay (CL) brown dry very stiff Volcanic ash, white and rusty colored		0945
170	No recovery		Cuttings	NA	Gravelly sand (SW)	NA ppm VOC/PID	1005
	175		Cuttings		Gravelly sand (SW) fine sand to fine gravel, dry		

CH2MHILL

PROJECT NUMBER	BORING NUMBER
146631.BV.IC	ST-106 SB-30 SHEET 4 OF 6

SOIL BORING LOG

PROJECT : KAFB Bulk Fuels Facility (ST-106) LOCATION : 100' W & 15' N of W end of rack
ELEVATION : DRILLING CONTRACTOR: THF/ Alton Schoomaker
DRILLING METHOD AND EQUIPMENT USED : Schram T660W Rotodrill 9" ARCH on Ford L9000 w/ 18" split spoon
WATER LEVELS : NA START : 01/24/2001 END: 02/02/2001 LOGGER : BJL

DEPTH BELOW SURFACE (FT)	INTERVAL (FT)	RECOVERY (FT)	SAMPLE #/TYPE	STANDARD PENETRATION TEST RESULTS 6"-6"-6"-6" (N)	SOIL DESCRIPTION: SOIL NAME, USCS GROUP SYMBOL, COLOR, MOISTURE CONTENT, RELATIVE DENSITY, OR CONSISTENCY, SOIL STRUCTURE, MINERALOGY.	COMMENTS: DEPTH OF CASING, DRILLING RATE, DRILLING FLUID LOSS, TESTS, AND INSTRUMENTATION. OVM (ppm): Headspace Analysis Time
180	180-181.5	1.5	SS	15-20-80	Poorly graded sand (SP) w/silt, light tan, dry firmly packed	1.9 ppm VOC/PID 1025
190	190-190.5	0.5	SS	20-50/4	Well graded sand w/gravel (SW) light tan, loose, dry	0.5 ppm VOC/PID 1045
200	200-200.2	0.2	SS		S.A.A.	0.2 ppm VOC/PID 1118
210	210-210.1	0.1	SS Cuttings	100/3	S.A.A.	NA ppm VOC/PID 1520
220	220-221.5	1.5	SS GRO/DRO/VOC	15-17-45	S.A.A. (SW) + 1" layer of hard/very stiff green clean clay. Clay shatters like tempered glass	158 ppm VOC/PID 1600
	222		Cuttings		Silt (ML) green moist	
230	230-230.5	0.5	SS	17-70/5	Poorly graded sand (SP) rusty, fine grained w/ yellow stuff	1.8 ppm VOC/PID 1630 1700 End of day 1/26/1 Begin 1/29/1 > 2000 ppm VOC/PID in cyclone exhaust 0950
	235		Cuttings			

CH2MHILL

PROJECT NUMBER	BORING NUMBER
146631.BV.IC	ST-106 SB-30 SHEET 5 OF 6

SOIL BORING LOG

PROJECT : KAFB Bulk Fuels Facility (ST-106) LOCATION : 100' W & 15' N of W end of rack
ELEVATION : DRILLING CONTRACTOR THF/ Alton Schoomaker
DRILLING METHOD AND EQUIPMENT USED : Schram T660W Rotodrill 9" ARCH on Ford L9000 w/ 18" split spoon
WATER LEVELS : NA START : 01/24/2001 END: 02/02/2001 LOGGER : BJL

DEPTH BELOW SURFACE (FT)	INTERVAL (FT)	RECOVERY (FT)	SAMPLE #/TYPE	STANDARD PENETRATION TEST RESULTS 6"-6"-6"-6" (N)	SOIL DESCRIPTION: SOIL NAME, USCS GROUP SYMBOL, COLOR, MOISTURE CONTENT, RELATIVE DENSITY, OR CONSISTENCY, SOIL STRUCTURE, MINERALOGY.	COMMENTS: DEPTH OF CASING, DRILLING RATE, DRILLING FLUID LOSS, TESTS, AND INSTRUMENTATION. OVM (ppm): Headspace Analysis Time
240	no recovery					NA ppm VOC/PID 0950 Odor and PID hits in cyclone exhaust
250	250-251.5	1.5	SS GRO/DRO/BTEX	100/9	Poorly graded sand (SP) fine grained, wet, loose some white volcanic ash chips	181 ppm VOC/PID 1025
260	260-260.5	0.5	SS	40-50/4	Poorly graded sand (SP) light tan, loose, fin-grained, moist, w/ 1.5" lean clay (CL) ball, dark brown, very stiff-hard	0.0 ppm VOC/PID 1105
	262		Cuttings		**Transition** Lean Clay (CL) wet	no odor or PID hits
	268		Cuttings		**Transition** Poorly graded sand (SP) dry	
270	270-271	1.0	SS GRO/DRO/VOC/SVOC	17-24-80	Poorly graded sand (SP) moist to dry, fine-grained w/trace of med sand	13 ppm VOC/PID 1235
			Cuttings		Poorly graded gravel (GP) fine-medium	
280	280-280.5	0.5	SS	50-50/4	Poorly graded sand (SP) light tan dry w/5-cm gravel	11.2 ppm VOC/PID 1310
290	no recovery		Cuttings	100/4	Gravely sand (SP) dry, upto medium gravel w/fine-grained sand	NA ppm VOC/PID 1350

CH2MHILL

PROJECT NUMBER	BORING NUMBER
146631.BV.IC	ST-106 SB-30 SHEET 6 OF 6

SOIL BORING LOG

PROJECT : KAFB Bulk Fuels Facility (ST-106) LOCATION : 100' W & 15' N of W end of rack
ELEVATION : DRILLING CONTRACTOR THF/ Alton Schoomaker
DRILLING METHOD AND EQUIPMENT USED : Schram T660W Rotodrill 9" ARCH on Ford L9000 w/ 18" split spoon
WATER LEVELS : NA START : 01/24/2001 END: 02/02/2001 LOGGER : BJL

DEPTH BELOW SURFACE (FT)	INTERVAL (FT)	RECOVERY (FT)	SAMPLE #/TYPE	STANDARD PENETRATION TEST RESULTS 6"-6"-6"-6" (N)	SOIL DESCRIPTION: SOIL NAME, USCS GROUP SYMBOL, COLOR, MOISTURE CONTENT, RELATIVE DENSITY, OR CONSISTENCY, SOIL STRUCTURE, MINERALOGY.	COMMENTS: DEPTH OF CASING, DRILLING RATE, DRILLING FLUID LOSS, TESTS, AND INSTRUMENTATION. OVM (ppm): Headspace Analysis Time
300		no recovery	Cuttings		Gravelly sands (SW)	NA ppm VOC/PID
	305-306	0.75	SS GRO/DRO/BTEX		Gravely sand & silt (GM) trace of clays, moist, limestone and granitic gravels to 5 cm, fine sands	20.0 ppm VOC/PID 1535 End of day 1/29/2001 New day 1/31/2001
310	310-310.5	0.5	SS GRO/DRO	120/10	Sandy & Silty Gravel (GM) Tan silt and sand, dry, upto 5-cm gravel	1.0 ppm VOC/PID 1615
320	320-320.5	0.5	SS GRO/DRO	145/11	Silty Sand w/Gravel (SW) Light tan, dry, 8-cm gravel	0.0 ppm VOC/PID 1615 End of day 1/31/2001 Begin 2/2/2001 At drilling startup, cyclone exhaust was 30.1 ppm VOC/PID
	325		Cuttings GRO/DRO		Poorly graded sand (SP) w/silt light tan moist	0.3 ppm VOC/PID 1130
330	330-331.5	1.5	SS GRO/DRO		Gravelly sand and silt (SW) llight tan loose dry metamorphic and granitic gravels **TD of soil boring 330' bgs**	5.6 - 1.1 ppm VOC/PID 1158

CH2MHILL

PROJECT NUMBER	BORING NUMBER
146631.BV.IC	ST-106 SB-31 SHEET 1 OF 3

SOIL BORING LOG

PROJECT : KAFB Bulk Fuels Facility (ST-106) LOCATION : 134' N of E end of Rack
ELEVATION : DRILLING CONTRACTOR THF/ Alton Schoomaker
DRILLING METHOD AND EQUIPMENT USED : Schram T660W Rotodrill 9" ARCH on Ford L9000 w/ 18" split spoon
WATER LEVELS : NA START : 02/06/2001 END: 02/07/2001 LOGGER : BJL

DEPTH BELOW SURFACE (FT)	INTERVAL (FT)	RECOVERY (FT)	SAMPLE #/TYPE	STANDARD PENETRATION TEST RESULTS 6"-6"-6"-6" (N)	SOIL DESCRIPTION: SOIL NAME, USCS GROUP SYMBOL, COLOR, MOISTURE CONTENT, RELATIVE DENSITY, OR CONSISTENCY, SOIL STRUCTURE, MINERALOGY.	COMMENTS: DEPTH OF CASING, DRILLING RATE, DRILLING FLUID LOSS, TESTS, AND INSTRUMENTATION. OVM (ppm): Headspace Analysis Time
0						
10	10-10.5	0.5	SS	15-15-50	Silty clay (CL) Rusty red, dry	1 ppm VOC/PID 1500
20	20-21	1.0	SS	12-12	Silt (ML) Rusty-red, moist, cohesive	0.6 ppm VOC/PID 1520
30	30-31	1.0	SS	12-17-23	Silty & Sandy Clay (CL) light orange, stiff moist-dry cohesive	0.3 ppm VOC/PID 1545
40	40-41	1.0	SS	20-50/6	Sandy silt (SM) orange dry-moist, trace of coarse-grained sand	4.8 ppm VOC/PID 1612
50	50-51	1.0	SS	36-50/6	S. A.A. ... Fine to coarse-grained sands	15.4 ppm VOC/PID 1635

CH2MHILL

PROJECT NUMBER	BORING NUMBER
146631.BV.IC	ST-106 SB-31 SHEET 2 OF 3

SOIL BORING LOG

PROJECT : KAFB Bulk Fuels Facility (ST-106) LOCATION : 134' N of E end of Rack
ELEVATION : DRILLING CONTRACTOR THF/ Alton Schoomaker
DRILLING METHOD AND EQUIPMENT USED : Schram T660W Rotodrill 9" ARCH on Ford L9000 w/ 18" split spoon
WATER LEVELS : NA START : 02/06/2001 END: 02/07/2001 LOGGER : BJL

DEPTH BELOW SURFACE (FT)	INTERVAL (FT)	RECOVERY (FT)	SAMPLE #/TYPE	STANDARD PENETRATION TEST RESULTS 6"-6"-6"-6" (N)	SOIL DESCRIPTION: SOIL NAME, USCS GROUP SYMBOL, COLOR, MOISTURE CONTENT, RELATIVE DENSITY, OR CONSISTENCY, SOIL STRUCTURE, MINERALOGY.	COMMENTS: DEPTH OF CASING, DRILLING RATE, DRILLING FLUID LOSS, TESTS, AND INSTRUMENTATION. OVM (ppm): Headspace Analysis Time
60	60-61	1.0	SS	26-50/6	S. A. A.	13.2 ppm VOC/PID 1655 Very faint VOC odor
70	70-71	1.0	SS GRO/DRO/VOC	18-50/6	Silt (ML) Orange-brown, cohesive, dry	75.4 ppm VOC/PID 1715
80	80-80.5	0.5	SS		Silty Clay (CL) Red-brown, hard, dry, fractured	4.9 ppm VOC/PID 1740 End of day 2/6/1 Begin 2/7/1
90	90-90.75	0.75	SS	4-29-15/3	Poorly graded sand (SP) light tan, fine-grained (sugar) sand, dry, loose, w/5-cm pumice cobble	0.2 ppm VOC/PID 0900
100	100-101	1.0	SS GRO/DRO/VOC	4-29-24/4	12" S. A. A. Plus trace med sand 1/2" Silt (ML) orange-tan, loose 1" Lean clay (CL) brown stiff	98 ppm VOC/PID 0925 Soil vapors only?... PID peaks quicklythen drops to much lower levels. Acetone odor.
	105		Cuttings		**Transition sand to clay**	
110	110-111	1.0	SS GRO/DRO	12-29-24/3	Lean clay (CL) dark brown, very stiff, moist	25 ppm VOC/PID 0950
	113		Cuttings		**Transition to Silt (ML) orange moist**	

CH2MHILL

PROJECT NUMBER	BORING NUMBER
146631.BV.IC	ST-106 SB-31 SHEET 3 OF 3

SOIL BORING LOG

PROJECT : KAFB Bulk Fuels Facility (ST-106) LOCATION : 134' N of E end of Rack
ELEVATION : DRILLING CONTRACTOR THF/ Alton Schoomaker
DRILLING METHOD AND EQUIPMENT USED : Schram T660W Rotodrill 9" ARCH on Ford L9000 w/ 18" split spoon
WATER LEVELS : NA START : 02/06/2001 END: 02/07/2001 LOGGER : BJL

DEPTH BELOW SURFACE (FT)	INTERVAL (FT)	RECOVERY (FT)	SAMPLE #/TYPE	STANDARD PENETRATION TEST RESULTS 6"-6"-6"-6" (N)	SOIL DESCRIPTION: SOIL NAME, USCS GROUP SYMBOL, COLOR, MOISTURE CONTENT, RELATIVE DENSITY, OR CONSISTENCY, SOIL STRUCTURE, MINERALOGY.	COMMENTS: DEPTH OF CASING, DRILLING RATE, DRILLING FLUID LOSS, TESTS, AND INSTRUMENTATION. OVM (ppm): Headspace Analysis	Time
120	120-121	1.0	SS GRO/DRO/VOC	6-25-35/3	Silt (ML) orange, moist, firm, cohesive	429 ppm VOC/PID	1035
130	130-131.5	1.5	SS GRO/DRO VOC/SVOC	64-20-30	Poorly graded sand (SP) Light tan, dry, loose, fine-grained sand w/gravel in cuttings	145 ppm VOC/PID	1130
140	140-140.5	0.5	SS GRO/DRO/VOC	34-43-54	Silt (ML) to Silty clay (ML) brown moist stiff well packed	144 ppm VOC/PID odor	1200
150	150-151	1.0	SS GRO/DRO/VOC		Poorly graded sand (SP) light tan, loose, dry, fine-grained TD = 150' bgs	2311 ppm VOC/PID End of day 2/7/1	1345
160							
170							

CH2MHILL

PROJECT NUMBER	BORING NUMBER
146631.BV.IC	ST-106 SB-32 SHEET 1 OF 6

SOIL BORING LOG

PROJECT : KAFB Bulk Fuels Facility (ST-106) LOCATION : 175' W & 15' S of W end of rack
ELEVATION : DRILLING CONTRACTOF THF/Altion Schoonmaker
DRILLING METHOD AND EQUIPMENT USED : Schram T660W Rotodrill on Ford L9000 w/18" slit spoon
WATER LEVELS : NA START : 03/02/2001 END: 03/07/2001 LOGGER : BJL

DEPTH BELOW SURFACE (FT)	INTERVAL (FT)	RECOVERY (FT)	SAMPLE #/TYPE	STANDARD PENETRATION TEST RESULTS 6"-6"-6"-6" (N)	SOIL DESCRIPTION: SOIL NAME, USCS GROUP SYMBOL, COLOR, MOISTURE CONTENT, RELATIVE DENSITY, OR CONSISTENCY, SOIL STRUCTURE, MINERALOGY.	COMMENTS: DEPTH OF CASING, DRILLING RATE, DRILLING FLUID LOSS, TESTS, AND INSTRUMENTATION. OVM (ppm): Headspace Analysis Time
0	0' - 10'	Cuttings				
10	10' - 12'	Cuttings			Sandy and Clayey Silt (SM/ML/CL) dark orange, moist	
	12' - 18'	Cuttings			Lean clay (CL) brown, wet	
	18' - 22'	Cuttings			Silt (ML) orange, dry	
20	22' - 29'	Cuttings			Lean clay (CL) brown, moist	
	29' - 32'	Cuttings			Silty sand (SM) Light tan, wet fine-grained sand	
30	32' - 33'	Cuttings			Silt (ML) orange, moist	
	33' - 39'	Cuttings			Lean clay (CL) orange-brown, moist	
	39' - 40	Cuttings			Well graded sand (SW) coarse-grained granitic sands	
40	40' - 50'	Cuttings			Silts & Sandy silts (ML-SM) orange, moist-almost wet	
50	50' - 72'	Cuttings			Silt (ML) red-orange, loose, dry	

CH2MHILL

PROJECT NUMBER	BORING NUMBER
146631.BV.IC	ST-106 SB-32 SHEET 2 OF 6

SOIL BORING LOG

PROJECT : KAFB Bulk Fuels Facility (ST-106) LOCATION : 175' W & 15' S of W end of rack
ELEVATION : DRILLING CONTRACTOR THF/Altion Schoonmaker
DRILLING METHOD AND EQUIPMENT USED : Schram T660W Rotodrill on Ford L9000 w/18" slit spoon
WATER LEVELS : NA START : 03/02/2001 END: 03/07/2001 LOGGER : BJL

DEPTH BELOW SURFACE (FT)	INTERVAL (FT)	RECOVERY (FT)	SAMPLE #/TYPE	STANDARD PENETRATION TEST RESULTS 6"-6"-6"-6" (N)	SOIL DESCRIPTION: SOIL NAME, USCS GROUP SYMBOL, COLOR, MOISTURE CONTENT, RELATIVE DENSITY, OR CONSISTENCY, SOIL STRUCTURE, MINERALOGY.	COMMENTS: DEPTH OF CASING, DRILLING RATE, DRILLING FLUID LOSS, TESTS, AND INSTRUMENTATION. OVM (ppm): Headspace Analysis	Time
60	50' - 72'	Cuttings			Silt (ML) red-orange, loose, dry		
70	72' - 74'	Cuttings			Silty clay (CL) light brown, hard, dry		
	74' - 81'	Cuttings			Silt (ML) red-orange, loose, dry		
80	81'				Silty gravel (GM) 1.5-cm gravels		
	81' - 85'				Silt (ML) orange, loose, dry		
	85' - 90'				Poorly graded sand (SP) light tan, dry, fine-grained.	End of day 3-2-01 Begin day 3-6-01	
90		No recovery Cuttings		12/15/1940	Gravelly and sandy silt (SM)		1130
100	100-101	1.0	SS	20-15-25	Silt (ML) orange-brown, dry firm	no odor	1200
110	110-111.5	1.5	SS	4-20-30	Lean clay (CL) brown, moist, medium-stiff	no odor	1220

CH2MHILL

PROJECT NUMBER	BORING NUMBER
146631.BV.IC	ST-106 SB-32 SHEET 3 OF 6

SOIL BORING LOG

PROJECT : KAFB Bulk Fuels Facility (ST-106) LOCATION : 175' W & 15' S of W end of rack
ELEVATION : DRILLING CONTRACTOR THF/Altion Schoonmaker
DRILLING METHOD AND EQUIPMENT USED : Schram T660W Rotodrill on Ford L9000 w/18" slit spoon
WATER LEVELS : NA START : 03/02/2001 END: 03/07/2001 LOGGER : BJL

DEPTH BELOW SURFACE (FT)	INTERVAL (FT)	RECOVERY (FT)	SAMPLE #/TYPE	STANDARD PENETRATION TEST RESULTS 6"-6"-6"-6" (N)	SOIL DESCRIPTION: SOIL NAME, USCS GROUP SYMBOL, COLOR, MOISTURE CONTENT, RELATIVE DENSITY, OR CONSISTENCY, SOIL STRUCTURE, MINERALOGY.	COMMENTS: DEPTH OF CASING, DRILLING RATE, DRILLING FLUID LOSS, TESTS, AND INSTRUMENTATION. OVM (ppm): Headspace Analysis	Time
120	120-121.5 123'	1.5	SS Cuttings	4-7-25	Lean clay (CL) brown, moist, stiff, 12' thick **Transition** to Poorly graded sand (SP) fine-grained, wet	no odor	1300
130	130-131	1.0	SS GRO/DRO	20-30-50/3	Gravelly sands (SW) tan-brown, wet		1340
140	No recovery			14-30-50		End of day 2-12-01 Begin new day 2-13-01	
150	150-151.5	1.5	SS Cuttings	4-24-70	1" Well-graded sand (SW) wet, over Lean clay (CL) light grey, moist, stiff Silty Sands (SP) w/pumice, moist	no odor	1500
160	160-161.5	1.5	SS	7-40-50/3	Poorly graded sand (SP) light tan, dry fine-grained w/1.5-cm pumice (black & orange)	no odor	1545
170	170-171.5	1.5	SS	24-40-50/3	Gravel-sand-silt mixture (GM) moist, well-packed	no odor	1615

CH2MHILL

PROJECT NUMBER	BORING NUMBER
146631.BV.IC	ST-106 SB-32 SHEET 4 OF 6

SOIL BORING LOG

PROJECT : KAFB Bulk Fuels Facility (ST-106) LOCATION : 175' W & 15' S of W end of rack
ELEVATION : DRILLING CONTRACTOR THF/Altion Schoonmaker
DRILLING METHOD AND EQUIPMENT USED : Schram T660W Rotodrill on Ford L9000 w/18" slit spoon
WATER LEVELS : NA START : 03/02/2001 END: 03/07/2001 LOGGER : BJL

DEPTH BELOW SURFACE (FT)	INTERVAL (FT)	RECOVERY (FT)	SAMPLE #/TYPE	STANDARD PENETRATION TEST RESULTS 6"-6"-6"-6" (N)	SOIL DESCRIPTION: SOIL NAME, USCS GROUP SYMBOL, COLOR, MOISTURE CONTENT, RELATIVE DENSITY, OR CONSISTENCY, SOIL STRUCTURE, MINERALOGY.	COMMENTS: DEPTH OF CASING, DRILLING RATE, DRILLING FLUID LOSS, TESTS, AND INSTRUMENTATION. OVM (ppm): Headspace Analysis Time
180	180-181.5	1.5	SS	15-30-50/4	Poorly graded sand (SP) light tan w/rusty layers, firmly packed, fine-grained	no odor 1650
190	190-191	1.0	SS	32-70	Poorly graded sand (SP) light tan, loose, dry, fine- to medium-grained (#20) sand	no odor 1722
200	200-201.5	1.5	SS	15-100/4	Well graded sand (SW) moist, loose	no odor 1758 End of day 3/6/01 Begin day 3/7/01
210	210-211	1	SS	13-30-40	Silty & gravelly sand (SW) tan, gravel to 3-cm, dry w/pumice	2.7 ppm VOC/PID 0830
220	220-221.5	1.5	SS	70-100	Poorly graded sand (SP) light tan, dry, loose, fine-grained	0.0 ppm VOC/PID 0915
230	230-231.5	1.5	SS	21-38-40/3	Well-graded sand (SW) light tan, w/silt & fine gravels, dry	78 ppm VOC/PID 1645 faint odor

CH2MHILL

PROJECT NUMBER	BORING NUMBER
146631.BV.IC	ST-106 SB-32 SHEET 5 OF 6

SOIL BORING LOG

PROJECT : KAFB Bulk Fuels Facility (ST-106) LOCATION : 175' W & 15' S of W end of rack
ELEVATION : DRILLING CONTRACTOF THF/Altion Schoonmaker
DRILLING METHOD AND EQUIPMENT USED : Schram T660W Rotodrill on Ford L9000 w/18" slit spoon
WATER LEVELS : NA START : 03/02/2001 END: 03/07/2001 LOGGER : BJL

DEPTH BELOW SURFACE (FT)	INTERVAL (FT)	RECOVERY (FT)	SAMPLE #/TYPE	STANDARD PENETRATION TEST RESULTS 6"-6"-6"-6" (N)	SOIL DESCRIPTION: SOIL NAME, USCS GROUP SYMBOL, COLOR, MOISTURE CONTENT, RELATIVE DENSITY, OR CONSISTENCY, SOIL STRUCTURE, MINERALOGY.	COMMENTS: DEPTH OF CASING, DRILLING RATE, DRILLING FLUID LOSS, TESTS, AND INSTRUMENTATION. OVM (ppm): Headspace Analysis Time
240	240-241	1.0	SS	10-30-50	6" Well graded sand (SW) 6" Silty clay (CL) brown moist, stiff	12 ppm VOC/PID 1005
250	250-251	1.0	SS GRO/DRO	23-38-50	Well graded sand (SW) tan-orange, dry, upto coarse-grained pumice, w/1/2" lean clay (CL) layer dry, brittle, hard.	14.2 ppm VOC/PID 1045
260	260-261	1.0	SS GRO/DRO	8-15-50/2	Poorly graded sand (SP) light tan, fine-grained w/trace of fine gravel	10.2 ppm VOC/PID 1155
270	270-271.5	1.50	SS GRO/DRO	10-75-50/2	Well-graded sand (SW) light tan, very fine- to coarse-grained sand w/ trace of gravel	1.7 ppm VOC/PID 1250
280	280-281	1.0	SS GRO/DRO	10-50-50/3	S. A, A,	0.8 ppm VOC/PID 1340
290	90-290.2	0.25	SS	175/10	Well graded gravels (GW) fine to 5-cm granitic, metamorphic, and basaltic	0.0 ppm VOC/PID 1525

CH2MHILL

PROJECT NUMBER	BORING NUMBER
146631.BV.IC	ST-106 SB-32 SHEET 6 OF 6

SOIL BORING LOG

PROJECT : KAFB Bulk Fuels Facility (ST-106) LOCATION : 175' W & 15' S of W end of rack
ELEVATION : DRILLING CONTRACTOF THF/Altion Schoonmaker
DRILLING METHOD AND EQUIPMENT USED : Schram T660W Rotodrill on Ford L9000 w/18" slit spoon
WATER LEVELS : NA START : 03/02/2001 END: 03/07/2001 LOGGER : BJL

DEPTH BELOW SURFACE (FT)	INTERVAL (FT)	RECOVERY (FT)	SAMPLE #/TYPE	STANDARD PENETRATION TEST RESULTS 6"-6"-6"-6" (N)	SOIL DESCRIPTION: SOIL NAME, USCS GROUP SYMBOL, COLOR, MOISTURE CONTENT, RELATIVE DENSITY, OR CONSISTENCY, SOIL STRUCTURE, MINERALOGY.	COMMENTS: DEPTH OF CASING, DRILLING RATE, DRILLING FLUID LOSS, TESTS, AND INSTRUMENTATION. OVM (ppm): Headspace Analysis	Time
300	300-300.5	0.5	SS GRO/DRO	40-100/5	Silty & sandy gravel (GM) Light tan, upto 5-cm gravels	2.1 ppm VOC/PID	1640
310	310-311.5	1.5	SS GRO/DRO/VOC	40-150/7	Poorly graded sand (SP) light tan, moist, fine-grained, well-packed	1.4 ppm VOC/PID End of day 3-6-01 Begin day 3-7-01	1735
320	320-321.5	1.5	SS GRO/DRO	10-100/8	Sandy & silty gravel (GM) light tan to yellow-orange, dry, loose, some cemented zones, metamorphic & volcanic gravels	0.0 ppm VOC/PID	0925
330	330-331.5	1.5	SS GRO/DRO/VOC	8-10-100	Poorly graded sand (SP) light tan, fine-grained, loose, moist **TD of Borehole 330' bgs**	1.1 ppm VOC/PID	1015
340							

CH2MHILL

PROJECT NUMBER	BORING NUMBER
146631.BV.IC	ST-106 SB-33 SHEET 1 OF 6

SOIL BORING LOG

PROJECT : KAFB Bulk Fuels Facility (ST-106) LOCATION : ~400' East of E end of rack
ELEVATION : DRILLING CONTRACTOR THF/Altion Schoonmaker
DRILLING METHOD AND EQUIPMENT USED : Schram T660W Rotodrill (ARCH) on Ford L9000 w/18" slit spoon
WATER LEVELS : NA START : 03/12/2001 END: 03/12/2001 LOGGER : BJL

DEPTH BELOW SURFACE (FT)	INTERVAL (FT)	RECOVERY (FT)	SAMPLE #/TYPE	STANDARD PENETRATION TEST RESULTS 6"-6"-6"-6" (N)	SOIL DESCRIPTION: SOIL NAME, USCS GROUP SYMBOL, COLOR, MOISTURE CONTENT, RELATIVE DENSITY, OR CONSISTENCY, SOIL STRUCTURE, MINERALOGY.	COMMENTS: DEPTH OF CASING, DRILLING RATE, DRILLING FLUID LOSS, TESTS, AND INSTRUMENTATION. OVM (ppm): Headspace Analysis Time
0	0' - 10'	Cuttings				
10	10-11.5	1.5	SS	5-7-32	Silty Clay and Lean Clay (CL) dark brown, moist, soft	0 ppm VOC/PID 1005
20	20-21	1.0	SS	17-17-50/4	Silt (ML) light brown moist, soft w/trace of coarse-grained sand & fine gravels and clay	0 ppm VOC/PID 1235
30	30-31	1.0	SS	4-7-27	Silty Clay (CL)_ dark brown, moist, soft	0 ppm VOC/PID 1315
40	40-41	1.0	SS	11-18-30	Lean Clay (CL) dark red-brown, moist, very stiff w/trace of coarse-grained sand	0 ppm VOC/PID 1345
50	50-51.5	1.5	SS	14-30-35	6" Gravelly Clay (CL) light brown, moist, loose, w/fine gravel 12" Silty & Sandy Gravel (GM) light brown, moist, loose, fine granite gravel	ppm VOC/PID 1417

CH2MHILL

PROJECT NUMBER	BORING NUMBER
146631.BV.IC	ST-106 SB-33 SHEET 2 OF 6

SOIL BORING LOG

PROJECT : KAFB Bulk Fuels Facility (ST-106) LOCATION : ~400' East of E end of rack
ELEVATION : DRILLING CONTRACTOR THF/Altion Schoonmaker
DRILLING METHOD AND EQUIPMENT USED : Schram T660W Rotodrill (ARCH) on Ford L9000 w/18" slit spoon
WATER LEVELS : NA START : 03/12/2001 END: 03/12/2001 LOGGER : BJL

DEPTH BELOW SURFACE (FT)	INTERVAL (FT)	RECOVERY (FT)	SAMPLE #/TYPE	STANDARD PENETRATION TEST RESULTS 6"-6"-6"-6" (N)	SOIL DESCRIPTION: SOIL NAME, USCS GROUP SYMBOL, COLOR, MOISTURE CONTENT, RELATIVE DENSITY, OR CONSISTENCY, SOIL STRUCTURE, MINERALOGY.	COMMENTS: DEPTH OF CASING, DRILLING RATE, DRILLING FLUID LOSS, TESTS, AND INSTRUMENTATION. OVM (ppm): Headspace Analysis Time
60	60-61	1.0	SS	8-10-25	Silt (ML) Light brown, moist, soft, w/trace fine gravel	0 ppm VOC/PID 1445
70	70-71	1.0	SS	20-15-25	Silty Clay (CL) light brown, medium stiff, moist	0 ppm VOC/PID
80	80-81.5	1.5	SS	17-35-42	Silty Sand (SM) light brown, loose, moist, some clay	1.4 ppm VOC/PID 1545
90	90-91	1.0	SS GRO/DRO/VOC	15-32-45	Lean Clay (CL) dark brown, moist, soft to very stiff	6.5 ppm VOC/PID 1615
100	100-101.5	1.5	SS GRO/DRO/VOC	14-24-50/3	Silty Clayey Sand (SM) Tan-grey, wet, soft, very fine-grained sand	120 ppm VOC/PID 1650
110	110-111	1.0	SS	10-20-36	Interlayered Lean Clay (CL) and Silt (ML) dark brown moist firm	26 ppm VOC/PID 1705

CH2MHILL

PROJECT NUMBER	BORING NUMBER
146631.BV.IC	ST-106 SB-33 SHEET 3 OF 6

SOIL BORING LOG

PROJECT : KAFB Bulk Fuels Facility (ST-106) LOCATION : ~400' East of E end of rack
ELEVATION : DRILLING CONTRACTOR THF/Altion Schoonmaker
DRILLING METHOD AND EQUIPMENT USED : Schram T660W Rotodrill (ARCH) on Ford L9000 w/18" slit spoon
WATER LEVELS : NA START : 03/12/2001 END: 03/12/2001 LOGGER : BJL

DEPTH BELOW SURFACE (FT)	INTERVAL (FT)	RECOVERY (FT)	SAMPLE #/TYPE	STANDARD PENETRATION TEST RESULTS 6"-6"-6"-6" (N)	SOIL DESCRIPTION: SOIL NAME, USCS GROUP SYMBOL, COLOR, MOISTURE CONTENT, RELATIVE DENSITY, OR CONSISTENCY, SOIL STRUCTURE, MINERALOGY.	COMMENTS: DEPTH OF CASING, DRILLING RATE, DRILLING FLUID LOSS, TESTS, AND INSTRUMENTATION. OVM (ppm): Headspace Analysis Time
120	120-121	1.0	SS	11-18-35	Clayey Silt (MLCL) light brown, moist	21.1 ppm VOC/PID 1637 End of day 3-12-01 Begin new day 3-13-01
130	130-131	1.0	SS	10-20-28	Sandy & Clayey Silt (ML)CL) light brown, moist, medium stiff **Transition** to sands @ 132' bgs	2.5 ppm VOC/PID 1005
140	140-141	1.0	SS	8-54-25/3	Gravelly Sand (SW) light tan, loose, dry, w/silt. Well rounded , 1-cm, gravels	1.0 ppm VOC/PID 1105 End of day 2-12-01 Begin new day 2-13-01
150	150-151	1.0	SS	18-32-20/3	Sandy Silt (SM) light brown, moist stiff	6.4 ppm VOC/PID 1205
160	160-161	1.0	SS	8-18-50/4	Silty Gravel (GM) light tan, dry, well-rouned, fine gravel to 5-cm.	0 ppm VOC/PID 1255
170	170-171	1.0	SS GRO+dup DRO VOC+dup	12-40-50/4	Poorly Graded Sand (SP) light tan, dry well-packed, w/cemented pumice layer	8.4 ppm VOC/PID 1330

CH2MHILL

PROJECT NUMBER	BORING NUMBER
146631.BV.IC	ST-106 SB-33 SHEET 4 OF 6

SOIL BORING LOG

PROJECT : KAFB Bulk Fuels Facility (ST-106) LOCATION : ~400' East of E end of rack
ELEVATION : DRILLING CONTRACTOF THF/Altion Schoonmaker
DRILLING METHOD AND EQUIPMENT USED : Schram T660W Rotodrill (ARCH) on Ford L9000 w/18" slit spoon
WATER LEVELS : NA START : 03/12/2001 END: 03/12/2001 LOGGER : BJL

DEPTH BELOW SURFACE (FT)	INTERVAL (FT)	RECOVERY (FT)	SAMPLE #/TYPE	STANDARD PENETRATION TEST RESULTS 6"-6"-6"-6" (N)	SOIL DESCRIPTION: SOIL NAME, USCS GROUP SYMBOL, COLOR, MOISTURE CONTENT, RELATIVE DENSITY, OR CONSISTENCY, SOIL STRUCTURE, MINERALOGY.	COMMENTS: DEPTH OF CASING, DRILLING RATE, DRILLING FLUID LOSS, TESTS, AND INSTRUMENTATION. OVM (ppm): Headspace Analysis Time
180	180-181	1.0	SS	6-14-50/5	Well graded sand (SW) light tan w/silt & gravel, loose, dry	8.6 ppm VOC/PID 1405
190	190-191	1.0	SS	7-27-105	Poorly graded sand (SP) light tan, well-packed, dry, very fine to fine-grained sand w/pumice	7.5 ppm VOC/PID 1450 End day 3-13-01 Begin day 3-15-01
200	200-201.5	1.5	SS	8-28-45	9" Clayey silt (MLCL) light brown moist 9" Poorly Graded Sand (SP) light tan, loose, very fine-grained, moist, no pumice "All rock" says driller	19.7 ppm VOC/PID 1630
210	210-210.5	1	SS	130/7	Poorly Graded Gravel (GP) fine gravels, dry, subrounded, limestone, granitic, &	37.5 ppm VOC/PID 1750
	206-211	Cuttings			S. A. A.	
	211-212	Cuttings			Silty Clay (CL) Wet	
	212-218	Cuttings			Poorly Graded Sand (SP)	
	218-220	Cuttings			Poorly Graded Gravel (GP)	End day 3-15-01 Begin day 3-19-01
220	220-221	1.0	SS	14-100/9	Silty Gravel(GM) light tan silt, Granitic & volcanic gravels up to 4-cm	0.6 ppm VOC/PID 1345
230	230-231.5	1.5	SS	15-65/9	Poorly Graded Sands (SP) light tan, well packed, dry, 9" fine-grained, 9" medium grained.	46.3 ppm VOC/PID 1415

CH2MHILL

PROJECT NUMBER	BORING NUMBER
146631.BV.IC	ST-106 SB-33 SHEET 5 OF 6

SOIL BORING LOG

PROJECT : KAFB Bulk Fuels Facility (ST-106) LOCATION : ~400' East of E end of rack
ELEVATION : DRILLING CONTRACTOR THF/Altion Schoonmaker
DRILLING METHOD AND EQUIPMENT USED : Schram T660W Rotodrill (ARCH) on Ford L9000 w/18" slit spoon
WATER LEVELS : NA START : 03/12/2001 END: 03/12/2001 LOGGER : BJL

DEPTH BELOW SURFACE (FT)	INTERVAL (FT)	RECOVERY (FT)	SAMPLE #/TYPE	STANDARD PENETRATION TEST RESULTS 6"-6"-6"-6" (N)	SOIL DESCRIPTION: SOIL NAME, USCS GROUP SYMBOL, COLOR, MOISTURE CONTENT, RELATIVE DENSITY, OR CONSISTENCY, SOIL STRUCTURE, MINERALOGY.	COMMENTS: DEPTH OF CASING, DRILLING RATE, DRILLING FLUID LOSS, TESTS, AND INSTRUMENTATION. OVM (ppm): Headspace Analysis Time
240	240-241	1.0	SS	7-10-12	Silty Gravel (GM) light tan silts, metamorphic & volcanic gravels up to 2-cm but mostly fine	10 ppm VOC/PID 1455
	244	Cuttings			Silty Clay (CL) light brown, wet	Wet
250	250-251	1.0	SS	14-35-50	Silt (ML) light tan, dry, cohesive	678 ppm VOC/PID 1545
		GRO/DRO/VOC				
	253	Cuttings			Silt (ML) creamey tan, moist	
	258	Cuttings			Poorly Graded Sand (SP) tan, fine-grained, wet	Wet
260	260-261.5	1.5	SS	25-50-50/3	Poorly graded sand (SP) light tan, fine-grained, loost, moist, w/ 1/2" thick cemented layer	293 ppm VOC/PID 1700 Acetone odor
		GRO/DRO/VOC				
270	270-271.5	1.50	SS	28-50	Poorly graded sand (SP) light tan, fine- to medium-grained, well-packed, moist	33 ppm VOC/PID 1737
		GRO/DRO/VOC				
	278	Cuttings			**Transition** to Sandy Clay (CL) dark brown	no odor 1755
280	280-281	1.0	SS	10-75/7	Sandy Clay (CL) dark brown, moist, very stiff	89.7 ppm VOC/PID 1815 silght odor
		GRO/DRO/VOC				
	282	Cuttings			**Transition** to sands and gravels	End of day 3-19-01 Begin day 3-20-01
290	290-291	1.00	SS	11-100/9	Gravelly Sand (SW) tan, moist, volcanic subrounded, <3-cm gravels	0.0 ppm VOC/PID 0915

CH2MHILL	PROJECT NUMBER	BORING NUMBER
	146631.BV.IC	ST-106 SB-33 SHEET 6 OF 6

SOIL BORING LOG

PROJECT : KAFB Bulk Fuels Facility (ST-106) LOCATION : ~400' East of E end of rack
ELEVATION : DRILLING CONTRACTOR THF/Altion Schoonmaker
DRILLING METHOD AND EQUIPMENT USED : Schram T660W Rotodrill (ARCH) on Ford L9000 w/18" slit spoon
WATER LEVELS : NA START : 03/12/2001 END: 03/12/2001 LOGGER : BJL

DEPTH BELOW SURFACE (FT)	INTERVAL (FT)	RECOVERY (FT)	SAMPLE #/TYPE	STANDARD PENETRATION TEST RESULTS 6"-6"-6"-6" (N)	SOIL DESCRIPTION: SOIL NAME, USCS GROUP SYMBOL, COLOR, MOISTURE CONTENT, RELATIVE DENSITY, OR CONSISTENCY, SOIL STRUCTURE, MINERALOGY.	COMMENTS: DEPTH OF CASING, DRILLING RATE, DRILLING FLUID LOSS, TESTS, AND INSTRUMENTATION. OVM (ppm): Headspace Analysis Time
300	300-300.5	0.5	SS	21-150/5	Poorly Graded Gravel (GP) up to 5-cm metamorphic & volcanic, no fines	0 ppm VOC/PID 1015
	No cuttings returned				Driller says "cemented gravels"	Drive casing is getting stuck
310	310-311.5	1.5	SS GRO/DRO	300/6	Poorly Graded Gravel (GP) cemented 5-mm to 5-cm metamorphic, pumice, volcanic gravels, well rounded to angular	0 ppm VOC/PID 1245
					TD of Borehole 310' bgs	**Refusal**
320						
330						
340						

CH2MHILL

PROJECT NUMBER	BORING NUMBER
160660.FF.FI	ST-106 SB-34 SHEET 1 OF 3

SOIL BORING LOG

PROJECT : KAFB Bulk Fuels Facility (ST-106) LOCATION : 280' N & 80' E of E end of Rack
ELEVATION : DRILLING CONTRACTOR THF/ Alton Schoomaker
DRILLING METHOD AND EQUIPMENT USED : Schram T660W Rotodrill 9" ARCH on Ford L9000 w/ 18" split spoon
WATER LEVELS : NA START : 03/27/2001 END: 03/28/2001 LOGGER : BJL

DEPTH BELOW SURFACE (FT)	INTERVAL (FT)	RECOVERY (FT)	SAMPLE #/TYPE	STANDARD PENETRATION TEST RESULTS 6"-6"-6"-6" (N)	SOIL DESCRIPTION: SOIL NAME, USCS GROUP SYMBOL, COLOR, MOISTURE CONTENT, RELATIVE DENSITY, OR CONSISTENCY, SOIL STRUCTURE, MINERALOGY.	COMMENTS: DEPTH OF CASING, DRILLING RATE, DRILLING FLUID LOSS, TESTS, AND INSTRUMENTATION. OVM (ppm): Headspace Analysis Time
0	2' - 10'	Cuttings			Sandy Clay (CL) Red-brown, moist	
10	10-11	1.0	SS	5-7-8	Silty Sand (SM) Light brown, to yellow-orange, moist, loose, trace of fine gravel & clay	0 ppm VOC/PID 0850
	18'	Cuttings			Sandy & Gravelly & Silty Clay (CL) Red-brown	
20	20-21.5	1.5	SS	5-7-20	Silty & Sandy Clay (CL) Red-brown, moist, loose/soft	3.4 ppm VOC/PID 0913
30	30-31	1.0	SS		Sandy Silt (ML) Red-brown, moist, trace of fine gravel.	0.5 ppm VOC/PID
	36'	Cuttings			S. A. A. Dry	
40	40-41	1.0	SS	9-100/9	Clayey silt (ML) light rusty tan, dry, hard, fractured	10 ppm VOC/PID 1115
50	50-51.5	1.5	SS	21-100/10	Clayey silt (ML) Rust or Tan colored, dry, well-packed, w/fine gravel	3.2 ppm VOC/PID 1145

CH2MHILL

PROJECT NUMBER	BORING NUMBER
160660.FF.FI	ST-106 SB-34 SHEET 2 OF 3

SOIL BORING LOG

PROJECT : KAFB Bulk Fuels Facility (ST-106) LOCATION : 280' N & 80' E of E end of Rack
ELEVATION : DRILLING CONTRACTOR THF/ Alton Schoomaker
DRILLING METHOD AND EQUIPMENT USED : Schram T660W Rotodrill 9" ARCH on Ford L9000 w/ 18" split spoon
WATER LEVELS : NA START : 03/27/2001 END: 03/28/2001 LOGGER : BJL

DEPTH BELOW SURFACE (FT)	INTERVAL (FT)	RECOVERY (FT)	SAMPLE #/TYPE	STANDARD PENETRATION TEST RESULTS 6"-6"-6"-6" (N)	SOIL DESCRIPTION: SOIL NAME, USCS GROUP SYMBOL, COLOR, MOISTURE CONTENT, RELATIVE DENSITY, OR CONSISTENCY, SOIL STRUCTURE, MINERALOGY.	COMMENTS: DEPTH OF CASING, DRILLING RATE, DRILLING FLUID LOSS, TESTS, AND INSTRUMENTATION. OVM (ppm): Headspace Analysis Time
60	60-61	1.0	SS	18-100/8	Sandy Silt (ML) Yellowish-orange, dry, loose, coarse-grained sand	3.5 ppm VOC/PID 1204 no odor
70	70-71	1.0	SS	10-25-45	Silt (ML) Light brownish-tan, cohesive, dry, hard	10.2 ppm VOC/PID 1230 no odor
80	80-81	1.0	SS	- - -	Silt (ML) Light brownish-tan, cohesive, dry, hard, disks in spoon	8.2 ppm VOC/PID 1300 no odor
90	90-91	1.0	SS	6-8-7	Poorly Graded Sand (SP) light tan, loose, fine-grained w/coarse-grained pumice	8.2 ppm VOC/PID 1320 no odor
100	100-101	1.0	SS	5-100/10	Poorly Graded Sand (SP) light tan, loose, fine-grained, dry	5.2 ppm VOC/PID 1430 no odor
110	110-111	1.0	SS GRO/DRO	12-100/10	2" Lean clay (CL) dark brown, moist 10" Silt (ML) orange-tan, loose, dry	35 ppm VOC/PID 1448

CH2MHILL

PROJECT NUMBER	BORING NUMBER
160660.FF.FI	ST-106 SB-34 SHEET 3 OF 3

SOIL BORING LOG

PROJECT : KAFB Bulk Fuels Facility (ST-106) LOCATION : 280' N & 80' E of E end of Rack
ELEVATION : DRILLING CONTRACTOR THF/ Alton Schoomaker
DRILLING METHOD AND EQUIPMENT USED : Schram T660W Rotodrill 9" ARCH on Ford L9000 w/ 18" split spoon
WATER LEVELS : NA START : 03/27/2001 END: 03/28/2001 LOGGER : BJL

DEPTH BELOW SURFACE (FT)	INTERVAL (FT)	RECOVERY (FT)	SAMPLE #/TYPE	STANDARD PENETRATION TEST RESULTS 6"-6"-6"-6" (N)	SOIL DESCRIPTION: SOIL NAME, USCS GROUP SYMBOL, COLOR, MOISTURE CONTENT, RELATIVE DENSITY, OR CONSISTENCY, SOIL STRUCTURE, MINERALOGY.	COMMENTS: DEPTH OF CASING, DRILLING RATE, DRILLING FLUID LOSS, TESTS, AND INSTRUMENTATION. OVM (ppm): Headspace Analysis Time
120	120-121.5	1.5	SS GRO/DRO	12-25-46	Lean Clay (CL) Red-brown, moist, very stiff	5.2 ppm VOC/PID 1515 End of day 03-27-01 Begin day 03-28-01
130	130-131	1.0	SS GRO/DRO/VOC	7-27-45	Silt (ML) tan, dry, cohesive, weak chips, no sand	90.1 ppm VOC/PID 0800
140	140-141.5	1.5	SS GRO/DRO		9" Gravelly Sand (SW) light tan, dry, fine-grained sand w/pumice & 4-cm gravels 9" Lean Clay (CL) dark brown, stiff, moist	19.1 ppm VOC/PID 0840 odor
	146'		Cuttings		**Transition** from Lean Clay (CL) to (SP)	
150	150-151	1.0	SS GRO/DRO		Gravelly sand (SW) light tan, loose, dry, fine-grained sand to 3-sm gravels, w/pumice **TD = 150' bgs**	10.1 ppm VOC/PID 0945 End of day 03-28-01
160						
170						

Appendix B

Appendix B

Well Completion Diagrams

PROJECT NUMBER	WELL NUMBER	
146631.BV.IC	KAFB 106-1	SHEET 1 OF 1

CH2MHILL

WELL COMPLETION DIAGRAM

PROJECT : KAFB Bulk Fuels Facility (ST-106) LOCATION : 65' N & 55' W of E end of rack

DRILLING CONTRACTOR : Water Development Corp. / Marian Phillips

DRILLING METHOD AND EQUIPMENT USED : SpeedStar 30K Stratex-ARCH

WATER LEVEL : 483' bgl START : 10/11/2000 END: 10/21/2000 LOGGER : B LeFevre/ABQ

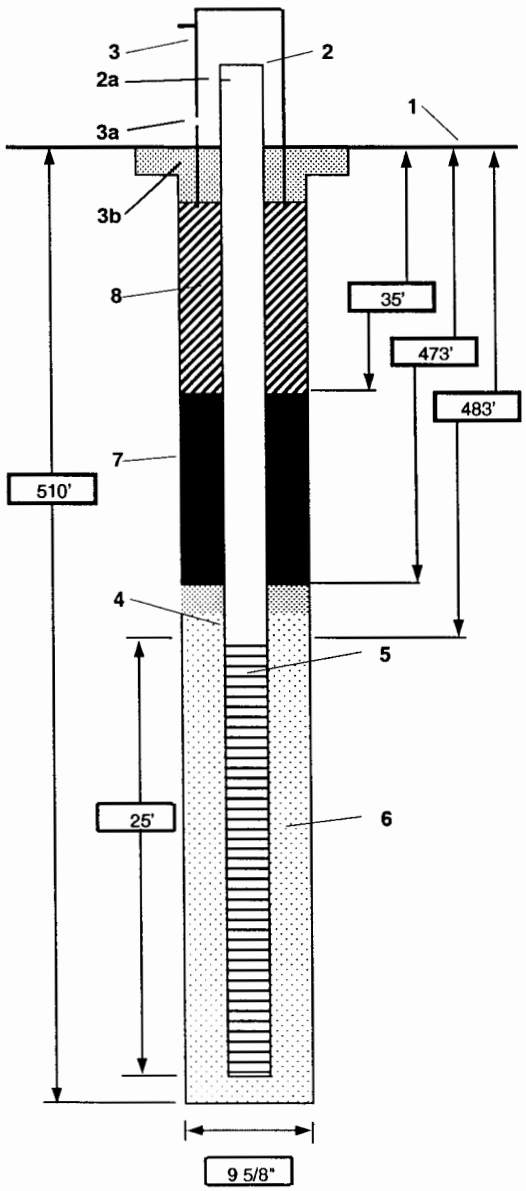

1- Ground elevation at well: 5339.15' (concrete pad)(surveyed)

2- Top of casing elevation: 5341.13' (surveyed)
a) vent hole? NA

3- Wellhead protection cover type: Steel 8" dia, aprox. 3' high, locking cap
a) weep hole? NA
b) concrete pad dimensions: 3' x 3' + 4 concrete filled bumper posts

4- Dia./type of well casing: 4" Sched 80 threaded PVC

5- Type/slot size of screen: 4" Sched 80 threaded PVC
0.010" slot

6- Type screen filter: 10-20 Colorado silica

7- Type of seal: Quick Grout bentonite slurry

8- Surface Seal
a) Grout mix used: Portland cement
b) Method of placement: Tremmie pipe
c) Vol. of well casing grout:

Development method: Bail, surge and pump

Development time: 1 day bailing, 1/2 hr pumping

Estimated purge volume: 150 Gal. bailed, 300 Gal. Pumped

Comments: 1/2' sump below screen.

Kink in PVC casing at aprox. 150' bgs. Well won't pass 3.5" x 6' bailer.

Transition between gravel pack and seal is 5' of #30 Colorado silica, and 5' of hydrated 3/8" bentonite chips

Illustration not to scale.

PROJECT NUMBER	WELL NUMBER	
146631.BV.IC	SVMW-01	SHEET 1 OF 1

CH2MHILL

SOIL VAPOR WELL COMPLETION DIAGRAM

PROJECT : KAFB Bulk Fuels Facility (ST-106)
LOCATION : SB-30/ 100' W of W end of rack
ELEVATION: Approximately 5339'
DRILLING CONTRACTOR : THF/Alton Schoonmaker
DRILLING METHOD AND EQUIPMENT USED: Schram T660W Rotodrill
WATER LEVELS : dry
START : 02/03/2001 END : 02/05/2001 LOGGER : BJL

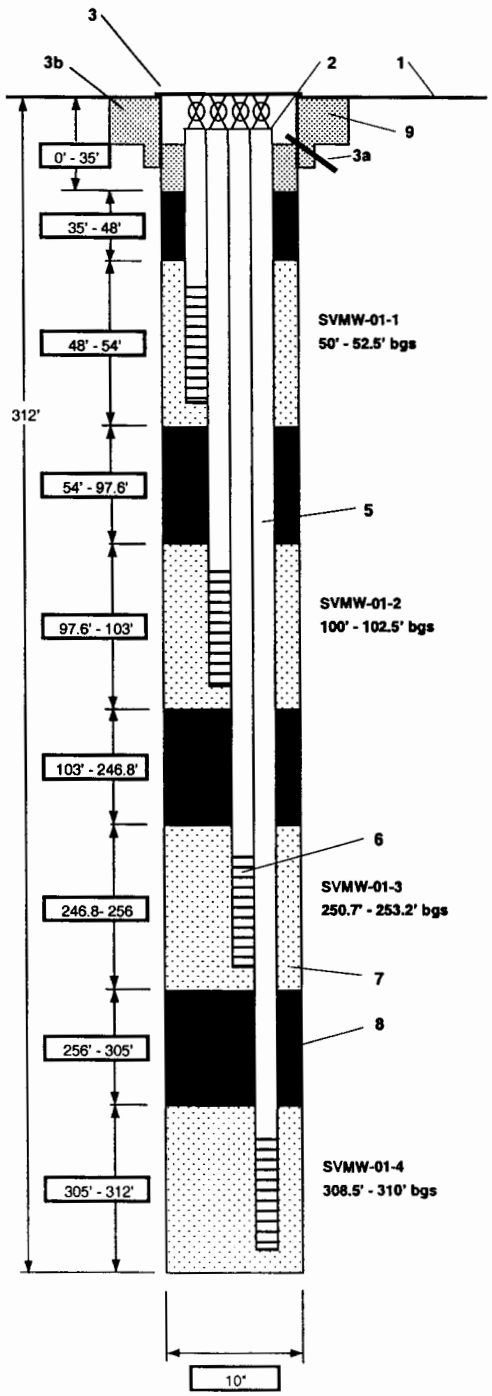

1- Ground elevation at well	approximately 5339'
2- Top of casing elevation	NA
3- Wellhead protection cover type	12" flush mount, locking caps
a) drain tube?	None
b) concrete pad dimensions	4' square flush mount
4- Dia./type surface casing	None
5- Dia./type of well casing	1/2" Nom. OD Schedule 80 PVC w/ball valve
6- Type/slot/size of screen	1/2" Nom. OD Schedule 80 PVC 0.050 slot, 2 1/2' long
7- Type screen filter	8 - 12 Oglebay Colorado Silica
quantity used	39 sacks
8- Type of seal	Hydrated 3/8" bentonite chips
quantity used	182 sacks
9- Grout	
a) Grout mix used	
b) Method of placement	
c) Vol.of surface casing grout	
d) Vol. of well casing grout	
Development method	NA
Development time	NA
Estimated purge volume	NA

Comments

Illustration not to scale.

PROJECT NUMBER	WELL NUMBER	
146631.BV.IC	SVMWN-02	SHEET 1 OF 1

CH2MHILL

SOIL VAPOR WELL COMPLETION DIAGRAM

PROJECT : KAFB Bulk Fuels Facility (ST-106) LOCATION : SB-31/ 134' N of E end of rack
ELEVATION: Approximately 5339' DRILLING CONTRACTOR : THF/Alton Schoonmaker
DRILLING METHOD AND EQUIPMENT USED: Schram T660W Rotodrill on Ford L9000
WATER LEVELS : dry START : 02/07/2001 END : 02/09/2001 LOGGER : BJL

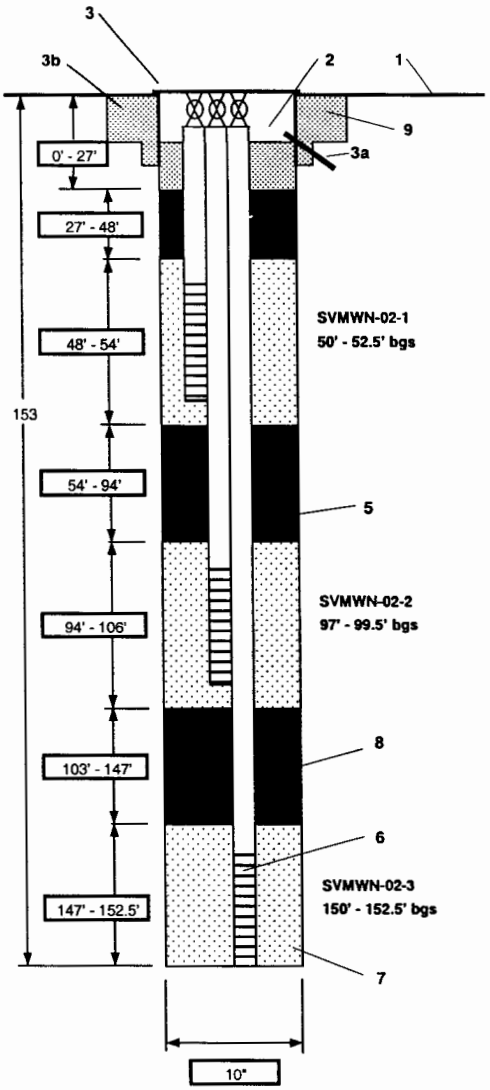

1- Ground elevation at well	Approximately 5339'
2- Top of casing elevation	NA
3- Wellhead protection cover type	12" flush mount, locking caps
a) drain tube?	None
b) concrete pad dimensions	4' square flush mount
4- Dia./type surface casing	None
5- Dia./type of well casing	1/2" Nom. OD Schedule 80 PVC w/ball valve
6- Type/slot/size of screen	1/2" Nom. OD Schedule 80 PVC 0.050 slot, 2 1/2' long
7- Type screen filter	8 - 12 Oglebay Colorado Silica
quantity used	20 sacks
8- Type of seal	Hydrated 3/8" bentonite chips
quantity used	73 sacks
9- Grout	
a) Grout mix used	
b) Method of placement	
c) Vol.of surface casing grout	
d) Vol. of well casing grout	
Development method	NA
Development time	NA
Estimated purge volume	NA

Comments

Illustration not to scale

PROJECT NUMBER	WELL NUMBER	
146631.BV.IC	SVMW-03	SHEET 1 OF 1

CH2MHILL

SOIL VAPOR WELL COMPLETION DIAGRAM

PROJECT : KAFB Bulk Fuels Facility (ST-106) LOCATION : SB-28A/ 105' E & 15' S of E end of rack
ELEVATION: Approximately 5339' DRILLING CONTRACTOR : THF/Alton Schoonmaker
DRILLING METHOD AND EQUIPMENT USED: Schram T660W Rotodrill
WATER LEVELS : dry START : 02/12/2001 END : 02/20/2001 LOGGER : BJL

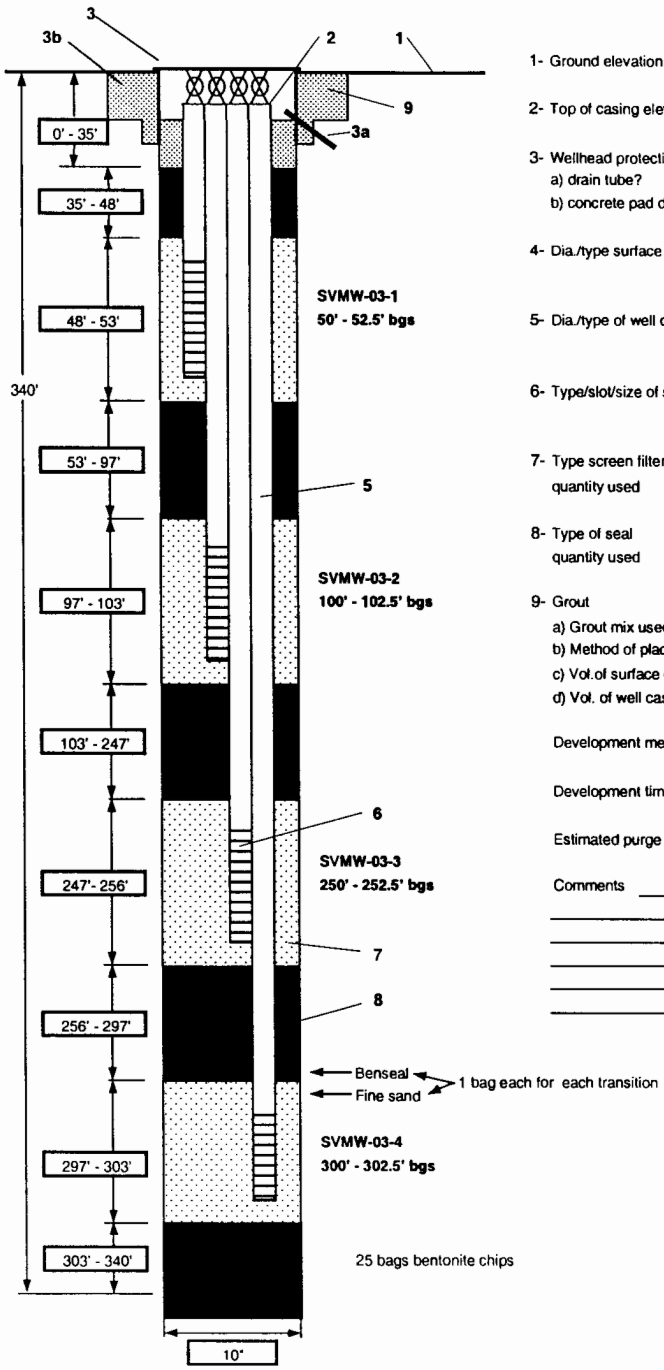

1- Ground elevation at well	approximately 5339'
2- Top of casing elevation	NA
3- Wellhead protection cover type	12" flush mount, locking caps
a) drain tube?	None
b) concrete pad dimensions	4' square flush mount
4- Dia./type surface casing	None
5- Dia./type of well casing	1/2" Nom. OD Schedule 80 PVC w/ball valve
6- Type/slot/size of screen	1/2" Nom. OD Schedule 80 PVC 0.050 slot, 2 1/2' long
7- Type screen filter	8 - 12 Oglebay Colorado Silica
quantity used	34 sacks
8- Type of seal	Hydrated 3/8" bentonite chips
quantity used	213 sacks
9- Grout	
a) Grout mix used	
b) Method of placement	
c) Vol.of surface casing grout	
d) Vol. of well casing grout	
Development method	NA
Development time	NA
Estimated purge volume	NA

Comments

Illustration not to scale.

PROJECT NUMBER	WELL NUMBER	
146631.BV.IC	SVMWN-04	SHEET 1 OF 1

CH2MHILL

SOIL VAPOR WELL COMPLETION DIAGRAM

PROJECT : KAFB Bulk Fuels Facility (ST-106) LOCATION : SB-29A / 20' W & 65' S of center of rack
ELEVATION: Approximately 5339' DRILLING CONTRACTOR : THF/Alton Schoonmaker
DRILLING METHOD AND EQUIPMENT USED: Schram T660W Rotodrill on Ford L9000
WATER LEVELS : dry START : 02/28/2001 END : 03/01/2001 LOGGER : BJL

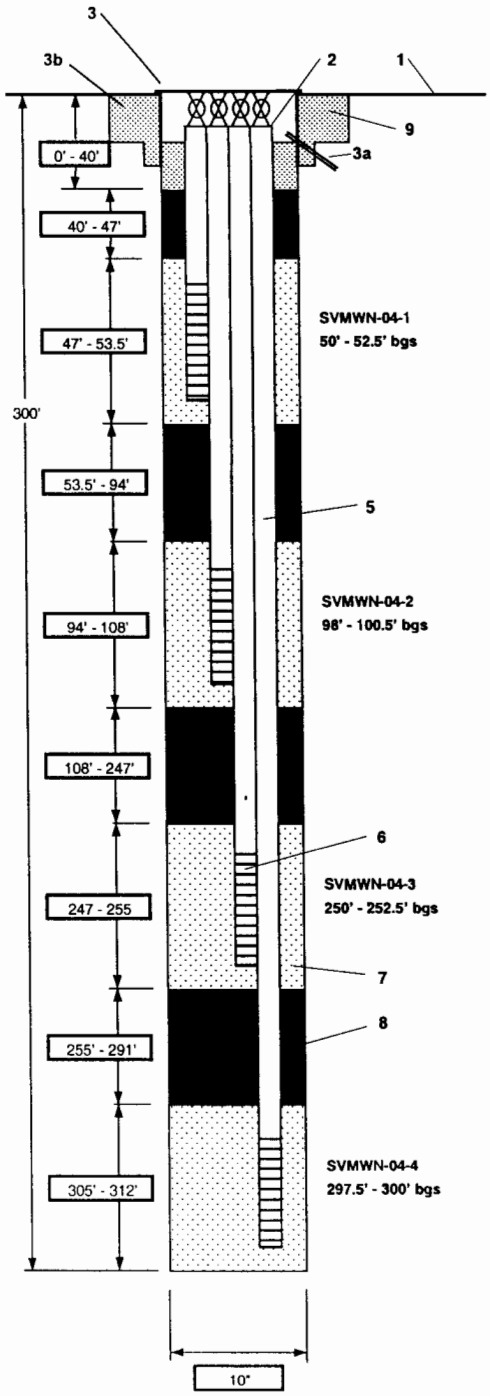

1- Ground elevation at well	approximately 5339'
2- Top of casing elevation	NA
3- Wellhead protection cover type	12" flush mount, locking caps
a) drain tube?	None
b) concrete pad dimensions	4' square flush mount
4- Dia./type surface casing	None
5- Dia./type of well casing	1/2" Nom. OD Schedule 80 PVC w/ball valve
6- Type/slot/size of screen	1/2" Nom. OD Schedule 80 PVC 0.050 slot, 2 1/2' long
7- Type screen filter	8 - 12 Oglebay Colorado Silica
quantity used	37 sacks
8- Type of seal	Hydrated 3/8" bentonite chips
quantity used	160 sacks
9- Grout	
a) Grout mix used	
b) Method of placement	
c) Vol.of surface casing grout	
d) Vol. of well casing grout	
Development method	NA
Development time	NA
Estimated purge volume	NA

Comments

Illustration not to scale.

PROJECT NUMBER	WELL NUMBER	
146631.BV.IC	SVMWN-05	SHEET 1 OF 1

CH2MHILL

SOIL VAPOR WELL COMPLETION DIAGRAM

PROJECT : KAFB Bulk Fuels Facility (ST-106) LOCATION : SB-31 / 175' W & 15' S of W end of rack
ELEVATION: Approximately 5339' DRILLING CONTRACTOR : THF/Alton Schoonmaker
DRILLING METHOD AND EQUIPMENT USED: Schram T660W Rotodrill on Ford L9000
WATER LEVELS : dry START : 02/28/2001 END : 03/09/2001 LOGGER : BJL

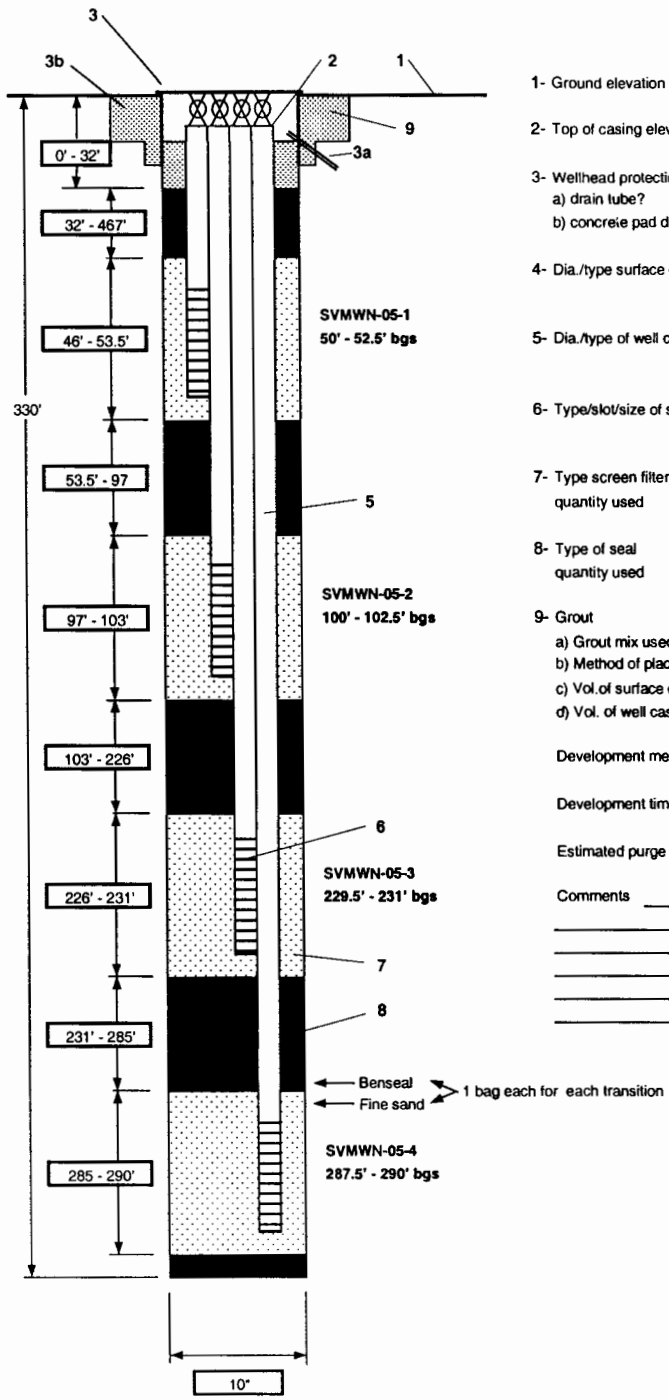

1- Ground elevation at well	approximately 5339'
2- Top of casing elevation	NA
3- Wellhead protection cover type	12" flush mount, locking caps
a) drain tube?	None
b) concrete pad dimensions	4' square flush mount
4- Dia./type surface casing	None
5- Dia./type of well casing	1/2" Nom. OD Schedule 80 PVC w/ball valve
6- Type/slot/size of screen	1/2" Nom. OD Schedule 80 PVC 0.050 slot, 2 1/2' long
7- Type screen filter	8 - 12 Oglebay Colorado Silica
quantity used	36 sacks
8- Type of seal	Hydrated 3/8" bentonite chips
quantity used	147 sacks
9- Grout	
a) Grout mix used	
b) Method of placement	
c) Vol.of surface casing grout	
d) Vol. of well casing grout	
Development method	NA
Development time	NA
Estimated purge volume	NA

Comments

Illustration not to scale.

PROJECT NUMBER	WELL NUMBER	
146631.BV.IC	SVMW-06	SHEET 1 OF 1

CH2MHILL

SOIL VAPOR WELL COMPLETION DIAGRAM

PROJECT : KAFB Bulk Fuels Facility (ST-106)
LOCATION : SB-33/ 400' E of E end of rack
ELEVATION: Approximately 5339'
DRILLING CONTRACTOR : THF/Alton Schoonmaker
DRILLING METHOD AND EQUIPMENT USED: Schram T660W Rotodrill
WATER LEVELS : dry
START : 03/20/2001 END : 03/21/2001 LOGGER : BJL

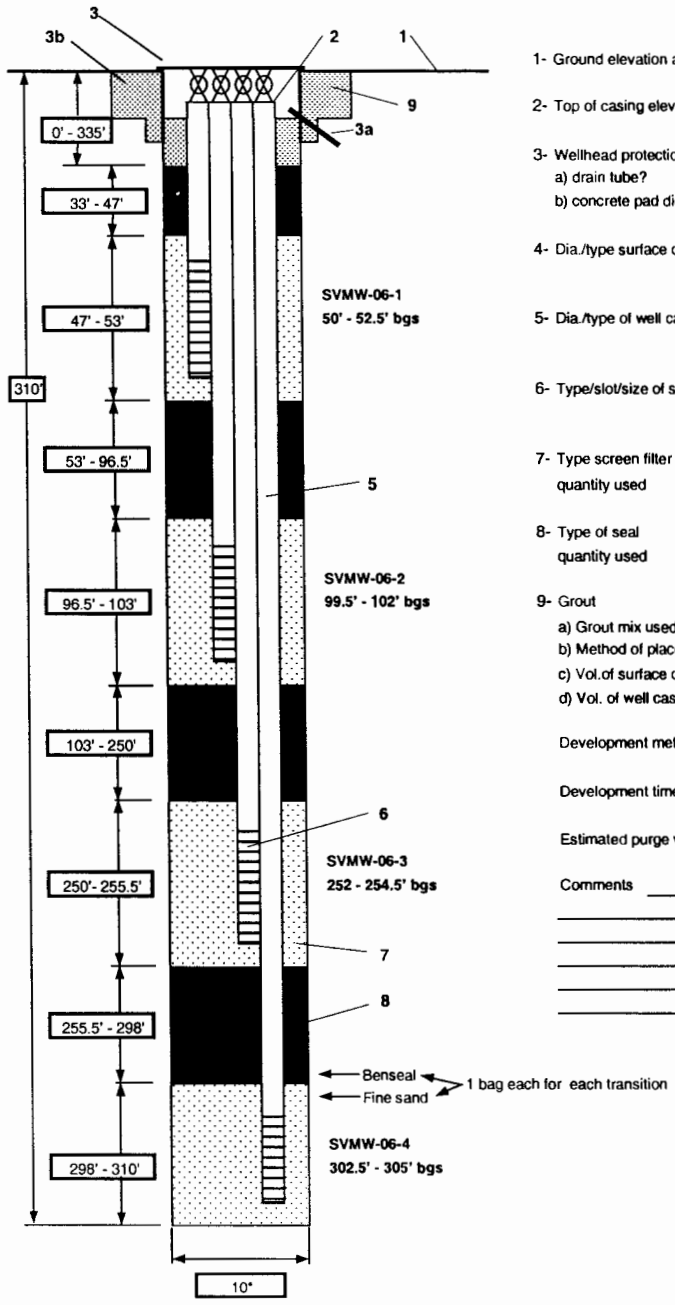

1- Ground elevation at well	approximately 5339'
2- Top of casing elevation	NA
3- Wellhead protection cover type	12" flush mount, locking caps
a) drain tube?	None
b) concrete pad dimensions	4' square flush mount
4- Dia./type surface casing	None
5- Dia./type of well casing	1/2" Nom. OD Schedule 80 PVC w/ball valve
6- Type/slot/size of screen	1/2" Nom. OD Schedule 80 PVC 0.050 slot, 2 1/2' long
7- Type screen filter	8 - 12 Oglebay Colorado Silica
quantity used	27 sacks
8- Type of seal	Hydrated 3/8" bentonite chips
quantity used	242 sacks
9- Grout	
a) Grout mix used	
b) Method of placement	
c) Vol.of surface casing grout	
d) Vol. of well casing grout	
Development method	NA
Development time	NA
Estimated purge volume	NA

Comments

Illustration not to scale

PROJECT NUMBER	WELL NUMBER
146631.BV.IC	SVMWN-07 SHEET 1 OF 1

CH2MHILL

SOIL VAPOR WELL COMPLETION DIAGRAM

PROJECT : KAFB Bulk Fuels Facility (ST-106) LOCATION : SB-34/ 280' N & 80' E of E end of rack
ELEVATION: Approximately 5339' DRILLING CONTRACTOR : THF/Alton Schoonmaker
DRILLING METHOD AND EQUIPMENT USED: Schram T660W Rotodrill on Ford L9000
WATER LEVELS : dry START : 03/27/2001 END : 03/29/2001 LOGGER : BJL

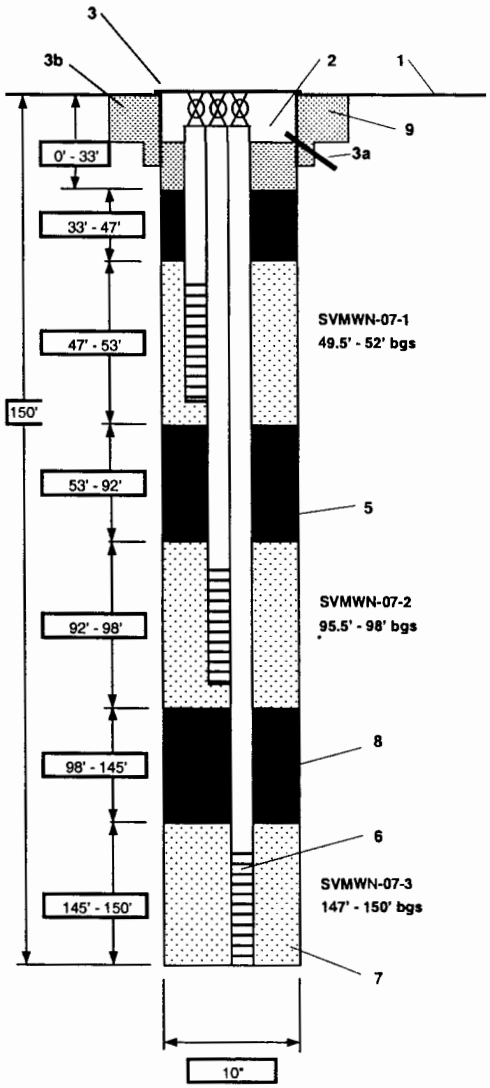

1- Ground elevation at well	Approximately 5339'
2- Top of casing elevation	NA
3- Wellhead protection cover type	12" flush mount, locking caps
a) drain tube?	None
b) concrete pad dimensions	4' square flush mount
4- Dia./type surface casing	None
5- Dia./type of well casing	1/2" Nom. OD Schedule 80 PVC w/ball valve
6- Type/slot/size of screen	1/2" Nom. OD Schedule 80 PVC 0.050 slot, 2 1/2' long
7- Type screen filter	8 - 12 Oglebay Colorado Silica
quantity used	20 sacks
8- Type of seal	Hydrated 3/8" bentonite chips
quantity used	70 sacks
9- Grout	
a) Grout mix used	
b) Method of placement	
c) Vol.of surface casing grout	
d) Vol. of well casing grout	
Development method	NA
Development time	NA
Estimated purge volume	NA

Comments

Illustration not to scale.

Appendix C

Appendix C

Analytical Results

ESN
ROCKY MOUNTAIN
Environmental
Services Network

RECEIVED JUL 1 1 2000

Monday, June 26, 2000

Sharon Minchak
6001 Indian School NE
Albuquerque, NM 87110

Dear Sharon:

Here is the data package for the analytical project carried out on site in Albuquerque, NM. Thirty soil gas samples were submitted for the determination of hydrocarbons, solvents and fixed gasses.

Acceptance limits for surrogate and spike recoveries are also included in the data report. Soil gas results are reported in µg/L for volatiles and percent for fixed gasses.

The accompanying project narrative details any problems or unusual circumstances related to this project. The narrative also contains a brief discussion of analytical methodology and the calculations used to obtain the final results.

If you should have any questions, please give me a call.

Sincerely,

Greg A. Jones
Analyst

400 Corporate Circle, Suite R
Golden, Colorado 80401-5625
Web Site: www.ESN-RM.com

303.278.1911
Fax: 303.278.0104
E-Mail: info@ESN-RM.com

ESN Rocky Mountain
Environmental Services Network

ESN Rocky Mountain
Project Narrative Report
ESN Project Number: 0253
Thursday, July 06, 2000
ESN Client: CH2M HILL
Client Contact: Sharon Minchak

Sample Receipt:
The samples for this project were received between 6 and 7 June 2000, from the ESN Rocky Mountain Field Services Division accompanied by a chain-of-custody form. The samples and their containers appeared to be in good condition and the chain of custody form was complete and accurate.

Holding Times:
All samples were prepared and analyzed within the method required holding times.

Methodology:
The determinations of volitile organicswere carried out using modified SW-846 method 8021and 8015. Samples were introduced into the instruments by method 5030 (purge and trap) using a 500 cc glass bulb. Fixed gases were run using method CFR 3C.

Laboratory Equipment:
The laboratory is equipped with two Finnigan/Tremetrics model 9001 gas chromatographs interfaced with Tekmar LSC 2000 purge and trap units. Each GC has FID, PID, and ELCD detectors mounted on the instrument. At any one time, two detectors are active on each instrument. Each detector has associated with it particular classes of compounds for which it is the primary means of identification and quantification. The other active detector on the instrument is sometimes used to confirm the identification performed by the primary detector. An SRI GC with a TCD detector was also added for the project to run the fixed gas analysis.

Calculations:
All the detectors on the gas chromatographs in the mobile laboratory are calibrated to respond to absolute masses (in nanograms) of analyte. Calculations are then carried out by the data system to compute the actual concentration of the analyte in the original sample. The default volume (mass) of sample for purge and trap is 10 ml. Dividing nanograms of analyte by milliliters or grams of sample is equivalent to ug/L.

Calibration:
The analytical work for this project was carried out using ESN level II QC and employed

400 Corporate Circle, Suite R
Golden, Colorado 80401-5625
Web Site: www.ESN-RM.com
303.278.1911
Fax: 303.278.0104
E-Mail: info@ESN-RM.com

a three point initial calibration. On each additional project day the calibration was verified with a mid-level continuing calibration verification.

Method Blanks:
A method blank is used after each calibration run to verify system cleanliness and after hot samples at the discretion of the analyst.

Surrogate Recoveries:
Surrogate Recoveries for samples SG-10 and SG-23 were low but the BTEX numbers for these two samples seems to match well with the total fuel run.

Analyst Comments:
Compounds detected at levels below the reporting limit are are flagged UJ. Compounds that were detected at levels above the linear range of the calibration are flagged J. Two samples contained a small amount of methylene chloride (SG-01 and SG-08). An ambient blank was run and it also showed methylene chloride. It appears that the secondary o-ring on the Tedlar bag leaked on these two samples allowing lab air into the glass bulb. A new supplier has been found for Tedlar bags.

6 July 2000
Analyst\Date

7/6/00
Reviewer\Date

CLIENT: CH2MHILL • CONTACT: Sharon Minshak
CLIENT PROJECT NUMBER:
SITE: Kirkland,

ESN PROJECT NUMBER: 253
CHEMIST(S): Greg Jones

VOLATILE HYDROCARBONS (EPA Method 8021M) ANALYSES OF SOIL VAPOR SAMPLES

Analysis Perfomed OnSite in ESN Rocky Mountain's "H" Laboratory with a Shimadzu 14A Gas Chromatograph & Tekmar LSC 2000 Purge and Trap.

SAMPLE COLLECTION DATE	06/06/00	06/06/00	06/06/00	Vapor	Vapor	Vapor
SAMPLE RECEIVED DATE	06/06/00	06/06/00	06/06/00	06/06/00	06/06/00	06/06/00
ANALYSIS DATE	06/06/00	06/06/00	06/06/00	06/06/00	06/06/00	06/06/00
SAMPLE IDENTIFICATION	**SG-01**	**SG-02**	**SG-03**	**SG-04**	**SG-05**	**SG-06**
MATRIX	Vapor	Vapor	Vapor	Vapor	Vapor	Vapor
SAMPLE AMOUNT	1cc	1cc	1cc	1cc	1cc	1cc
Carbon Dioxide	0.5	0.9	0.0	2.0	2.0	2.3
Oxygen	21.3	20.0	20.0	17.3	17.1	17.3
Nitrogen	81.7	77.1	78.1	79.2	77.4	80.9
Carbon Dioxide	ND	ND	ND	ND	ND	ND
Methane	ND	ND	ND	ND	ND	ND
REPORTING LIMITS	1.0	1.0	1.0	1.0	1.0	1.0
REPORTING UNITS	%	%	%	%	%	%
SAMPLE AMOUNT cc	380	380	380	380	380	380
JP-4	0.495	0.363	0.081	0.077	0.066	0.038
Bulk Jet Fuel	5.311	1.268	0.406	0.456	0.308	0.127
JP-8	0.650	1.032	0.102	0.092	4.053	0.000
TOTAL FUEL	**5.961**	**2.300**	**0.508**	**0.547**	**4.361**	**0.127**
REPORTING LIMITS	0.053	0.053	0.053	0.053	0.053	0.053
REPORTING UNITS	ug/L	ug/L	ug/L	ug/L	ug/L	ug/L
SAMPLE AMOUNT cc	380	380	NA	380	380	NA
1,1-Dichloroethene	ND	ND		ND	ND	
Methylene Chloride	0.079 B	ND		ND	ND	
trans-1,2-Dichloroethene	ND	ND		ND	ND	
1,1-Dichloroethane	ND	ND		ND	ND	
2,2-Dichloropropane	ND	ND		ND	ND	
cis-1,2-Dichloroethene	ND	ND		ND	ND	
Chloroform	ND	ND		ND	ND	
1,1,1-Trichloroethane	ND	ND		ND	ND	
Carbon Tetrachloride	ND	ND		ND	ND	
1,2-Dichloroethane	ND	ND		ND	ND	
Benzene	0.141	0.142		0.139	ND	
Trichloroethene	ND	ND		ND	ND	
Toluene	0.153	0.145		0.137	0.142	
1,1,2-Trichloroethane	ND	ND		ND	ND	
Tetrachloroethene	ND	ND		ND	ND	
Chlorobenzene	ND	ND		ND	ND	
Ethylbenzene	0.129	0.137		0.116	0.121	
m&p-Xylene	0.271	0.134		0.229	0.232	
o-Xylene	0.144	0.129		0.129	0.132	
1,1,1,2-Tetrachloroethane	ND	ND		ND	ND	
1,1,2,2-Tetrachloroethane	ND	ND		ND	ND	
REPORTING LIMITS	0.053	0.053		0.053	0.053	
REPORTING UNITS	ug/L	ug/L		ug/L	ug/L	
SURROGATE RECOVERY:						
Trifluorotoluene	75%	77%		75%	76%	

See Project Narrative for Data Qualifier Explanations

CLIENT: CH2MHILL • CONTACT: Sharon Minshak
CLIENT PROJECT NUMBER:
SITE: Kirkland,

ESN PROJECT NUMBER: 253
CHEMIST(S): Greg Jones

VOLATILE HYDROCARBONS (EPA Method 8021M) ANALYSES OF SOIL VAPOR SAMPLES

Analysis Perfomed OnSite in ESN Rocky Mountain's "H" Laboratory with a Shimadzu 14A Gas Chromatograph & Tekmar LSC 2000 Purge and Trap.

SAMPLE COLLECTION DATE	06/06/00	06/06/00	06/07/00	Vapor	Vapor	Vapor
SAMPLE RECEIVED DATE	06/06/00	06/06/00	06/07/00	06/07/00	06/07/00	06/07/00
ANALYSIS DATE	06/07/00	06/07/00	06/07/00	06/07/00	06/07/00	06/07/00
SAMPLE IDENTIFICATION	**SG-07**	**SG-08**	**SG-09**	**SG-10**	**SG-11**	**SG-12**
MATRIX	Vapor	Vapor	Vapor	Vapor	Vapor	Vapor
SAMPLE AMOUNT	1cc	1cc	1cc	1cc	1cc	1cc
Carbon Dioxide	0.6	8.8	0.0	5.5	1.0	2.3
Oxygen	20.2	11.7	20.0	15.4	19.0	14.6
Nitrogen	77.7	78.2	74.7	81.3	73.1	76.9
Carbon Dioxide	ND	ND	ND	ND	ND	ND
Methane	ND	ND	ND	ND	ND	ND
REPORTING LIMITS	1.0	1.0	1.0	1.0	1.0	1.0
REPORTING UNITS	%	%	%	%	%	%
SAMPLE AMOUNT	380	380	380	380	380	380
JP-4	0.051	0.185	0.131	0.210	0.270	0.201
Bulk Jet Fuel	0.137	0.661	0.495	0.547	0.726	0.397
JP-8	0.051	0.072	0.067	0.059	0.066	0.049
TOTAL FUEL	**0.188**	**0.733**	**0.562**	**0.606**	**0.792**	**0.446**
REPORTING LIMITS	0.053	0.053	0.053	0.053	0.053	0.053
REPORTING UNITS	ug/L	ug/L	ug/L	ug/L	ug/L	ug/L
SAMPLE AMOUNT	NA	380	NA	380	380	380
1,1-Dichloroethene		ND		ND	ND	ND
Methylene Chloride		0.219 B		ND	ND	ND
trans-1,2-Dichloroethene		ND		ND	ND	ND
1,1-Dichloroethane		ND		ND	ND	ND
2,2-Dichloropropane		ND		ND	ND	ND
cis-1,2-Dichloroethene		ND		ND	ND	ND
Chloroform		ND		ND	ND	ND
1,1,1-Trichloroethane		ND		ND	ND	ND
Carbon Tetrachloride		ND		ND	ND	ND
1,2-Dichloroethane		ND		ND	ND	ND
Benzene		0.139		0.139	ND	ND
Trichloroethene		ND		ND	ND	ND
Toluene		0.148		0.133	0.039	0.024
1,1,2-Trichloroethane		ND		ND	ND	ND
Tetrachloroethene		ND		ND	ND	ND
Chlorobenzene		ND		ND	ND	ND
Ethylbenzene		0.118		0.116	0.008	0.006
m&p-Xylene		0.233		0.221	0.012	0.017
o-Xylene		0.130		ND	0.005	0.005
1,1,1,2-Tetrachloroethane		ND		ND	ND	ND
1,1,2,2-Tetrachloroethane		ND		ND	ND	ND
REPORTING LIMITS		0.053		0.053	0.053	0.053
REPORTING UNITS		ug/L		ug/L	ug/L	ug/L
SURROGATE RECOVERY:						
Trifluorotoluene		74%		67%	96%	95%

See Project Narrative for Data Qualifier Explanations

CLIENT: CH2MHILL • CONTACT: Sharon Minshak
CLIENT PROJECT NUMBER:
SITE: Kirkland,

ESN PROJECT NUMBER: 253
CHEMIST(S): Greg Jones

VOLATILE HYDROCARBONS (EPA Method 8021M) ANALYSES OF SOIL VAPOR SAMPLES

Analysis Perfomed OnSite in ESN Rocky Mountain's "H" Laboratory with a Shimadzu 14A Gas Chromatograph & Tekmar LSC 2000 Purge and Trap.

SAMPLE COLLECTION DATE	06/07/00	06/07/00	06/07/00	Vapor	Vapor	Vapor
SAMPLE RECEIVED DATE	06/07/00	06/07/00	06/07/00	06/07/00	06/07/00	06/07/00
ANALYSIS DATE	06/07/00	06/07/00	06/07/00	06/07/00	06/07/00	06/07/00
SAMPLE IDENTIFICATION	**SG-13**	**SG-14**	**SG-15**	**SG-16**	**SG-17**	**SG-18**
MATRIX	Vapor	Vapor	Vapor	Vapor	Vapor	Vapor
SAMPLE AMOUNT	1cc	1cc	1cc	1cc	1cc	1cc
Carbon Dioxide	3.8	5.6	4.8	3.8	0.7	5.3
Oxygen	15.4	13.3	15.7	17.6	19.3	15.8
Nitrogen	75.9	74.3	78.7	79.1	73.3	80.5
Carbon Dioxide	ND	ND	ND	ND	ND	ND
Methane	ND	ND	ND	ND	ND	ND
REPORTING LIMITS	1.0	1.0	1.0	1.0	1.0	1.0
REPORTING UNITS	%	%	%	%	%	%
SAMPLE AMOUNT	380	380	380	380	380	380
JP-4	0.036	0.118	0.314	0.597	0.290	0.518
Bulk Jet Fuel	0.612	0.812	0.924	1.759	0.907	1.279
JP-8	0.058	0.224	0.082	0.105	0.071	0.076
TOTAL FUEL	**0.669**	**1.036**	**1.005**	**1.864**	**0.978**	**1.355**
REPORTING LIMITS	0.053	0.053	0.053	0.053	0.053	0.053
REPORTING UNITS	ug/L	ug/L	ug/L	ug/L	ug/L	ug/L
SAMPLE AMOUNT	NA	NA	380	380	380	380
1,1-Dichloroethene			ND	ND	ND	ND
Methylene Chloride			ND	ND	ND	ND
trans-1,2-Dichloroethene			ND	ND	ND	ND
1,1-Dichloroethane			ND	ND	ND	ND
2,2-Dichloropropane			ND	ND	ND	ND
cis-1,2-Dichloroethene			ND	ND	ND	ND
Chloroform			ND	ND	ND	ND
1,1,1-Trichloroethane			ND	ND	ND	ND
Carbon Tetrachloride			ND	ND	ND	ND
1,2-Dichloroethane			ND	ND	ND	ND
Benzene			ND	ND	ND	ND
Trichloroethene			ND	ND	ND	ND
Toluene			0.044	0.048	0.025	0.057
1,1,2-Trichloroethane			ND	ND	ND	ND
Tetrachloroethene			ND	ND	ND	ND
Chlorobenzene			ND	ND	ND	ND
Ethylbenzene			0.023	0.021	0.011	0.030
m&p-Xylene			0.019	0.020	0.016	0.026
o-Xylene			0.007	0.008	0.005	0.020
1,1,1,2-Tetrachloroethane			ND	ND	ND	ND
1,1,2,2-Tetrachloroethane			ND	ND	ND	ND
REPORTING LIMITS			0.053	0.053	0.053	0.053
REPORTING UNITS			ug/L	ug/L	ug/L	ug/L
SURROGATE RECOVERY:						
Trifluorotoluene			110%	102%	107%	110%

See Project Narrative for Data Qualifier Explanations

CLIENT: CH2MHILL • CONTACT: Sharon Minshak
CLIENT PROJECT NUMBER:
SITE: Kirkland,

ESN PROJECT NUMBER: 253
CHEMIST(S): Greg Jones

VOLATILE HYDROCARBONS (EPA Method 8021M) ANALYSES OF SOIL VAPOR SAMPLES

Analysis Perfomed OnSite in ESN Rocky Mountain's "H" Laboratory with a Shimadzu 14A Gas Chromatograph & Tekmar LSC 2000 Purge and Trap.

SAMPLE COLLECTION DATE	06/07/00	06/07/00	06/07/00	Vapor	Vapor	Vapor
SAMPLE RECEIVED DATE	06/07/00	06/07/00	06/07/00	06/07/00	06/07/00	06/07/00
ANALYSIS DATE	06/07/00	06/07/00	06/07/00	06/07/00	06/08/00	06/07/00
SAMPLE IDENTIFICATION	**SG-19**	**SG-20**	**SG-21**	**SG-22**	**SG-23**	**SG-24**
MATRIX	Vapor	Vapor	Vapor	Vapor	Vapor	Vapor
SAMPLE AMOUNT	1cc	1cc	1cc	1cc	1cc	1cc
Carbon Dioxide	0.3	0.4	0.6	0.5	1.5	1.0
Oxygen	19.8	19.4	20.4	20.9	19.3	19.3
Nitrogen	74.4	71.8	78.2	80.7	78.6	78.5
Carbon Dioxide	ND	ND	ND	ND	ND	ND
Methane	ND	ND	ND	ND	ND	ND
REPORTING LIMITS	1.0	1.0	1.0	1.0	1.0	1.0
REPORTING UNITS	%	%	%	%	%	%
SAMPLE AMOUNT	380	380	380	380	380	380
JP-4	0.336	0.053	0.234	0.271	0.276	0.281
Bulk Jet Fuel	0.893	0.397	0.697	0.761	1.052	1.296
JP-8	0.055	0.042	0.049	0.056	0.081	0.107
TOTAL FUEL	**0.948**	**0.439**	**0.746**	**0.816**	**1.133**	**1.403**
REPORTING LIMITS	0.053	0.053	0.053	0.053	0.053	0.053
REPORTING UNITS	ug/L	ug/L	ug/L	ug/L	ug/L	ug/L
SAMPLE AMOUNT	380	NA	NA	380	380	NA
1,1-Dichloroethene	ND			ND	ND	
Methylene Chloride	ND			ND	ND	
trans-1,2-Dichloroethene	ND			ND	ND	
1,1-Dichloroethane	ND			ND	ND	
2,2-Dichloropropane	ND			ND	ND	
cis-1,2-Dichloroethene	ND			ND	ND	
Chloroform	ND			ND	ND	
1,1,1-Trichloroethane	ND			ND	ND	
Carbon Tetrachloride	ND			ND	ND	
1,2-Dichloroethane	ND			ND	ND	
Benzene	ND			ND	ND	
Trichloroethene	ND			ND	ND	
Toluene	0.039			0.041	0.073	
1,1,2-Trichloroethane	ND			ND	ND	
Tetrachloroethene	ND			ND	ND	
Chlorobenzene	ND			ND	ND	
Ethylbenzene	0.016			0.017	0.011	
m&p-Xylene	0.020			0.021	0.040	
o-Xylene	0.010			0.012	0.010	
1,1,1,2-Tetrachloroethane	ND			ND	ND	
1,1,2,2-Tetrachloroethane	ND			ND	ND	
REPORTING LIMITS	0.053			0.053	0.053	
REPORTING UNITS	ug/L			ug/L	ug/L	
SURROGATE RECOVERY:						
Trifluorotoluene	96%			100%	62%	

See Project Narrative for Data Qualifier Explanations

CLIENT: CH2MHILL • CONTACT: Sharon Minshak
CLIENT PROJECT NUMBER:
SITE: Kirkland,

ESN PROJECT NUMBER: 253
CHEMIST(S): Greg Jones

VOLATILE HYDROCARBONS (EPA Method 8021M) ANALYSES OF SOIL VAPOR SAMPLES

Analysis Perfomed OnSite in ESN Rocky Mountain's "H" Laboratory with a Shimadzu 14A Gas Chromatograph & Tekmar LSC 2000 Purge and Trap.

SAMPLE COLLECTION DATE	06/07/00	06/07/00	06/07/00	Vapor	Vapor	Vapor
SAMPLE RECEIVED DATE	06/07/00	06/07/00	06/07/00	06/08/00	06/08/00	06/08/00
ANALYSIS DATE	06/07/00	06/08/00	06/08/00	06/08/00	06/08/00	06/08/00
SAMPLE IDENTIFICATION	**SG-25**	**SG-26**	**SG-27**	**SG-28**	**SG-29**	**SG-30**
MATRIX	Vapor	Vapor	Vapor	Vapor	Vapor	Vapor
SAMPLE AMOUNT	1cc	1cc	1cc	1cc	1cc	1cc
Carbon Dioxide	0.4	0.3	2.4	1.5	0.8	2.6
Oxygen	19.5	18.8	18.7	18.4	19.3	17.1
Nitrogen	78.3	75.2	79.1	77.8	77.6	76.3
Carbon Dioxide	ND	ND	ND	ND	ND	ND
Methane	ND	ND	ND	ND	ND	ND
REPORTING LIMITS	1.0	1.0	1.0	1.0	1.0	1.0
REPORTING UNITS	%	%	%	%	%	%
SAMPLE AMOUNT	380	380	380	380	380	380
JP-4	0.049	0.124	0.204	0.402	0.255	0.046
Bulk Jet Fuel	0.544	0.742	0.605	7.992	0.843	0.426
JP-8	0.054	0.488	0.044	0.148	0.036	0.027
TOTAL FUEL	**0.597**	**1.230**	**0.650**	**8.140**	**0.879**	**0.453**
REPORTING LIMITS	0.053	0.053	0.053	0.053	0.053	0.053
REPORTING UNITS	ug/L	ug/L	ug/L	ug/L	ug/L	ug/L
SAMPLE AMOUNT	NA	380	380	380	NA	NA
1,1-Dichloroethene		ND	ND	ND		
Methylene Chloride		ND	ND	ND		
trans-1,2-Dichloroethene		ND	ND	ND		
1,1-Dichloroethane		ND	ND	ND		
2,2-Dichloropropane		ND	ND	ND		
cis-1,2-Dichloroethene		ND	ND	ND		
Chloroform		ND	ND	ND		
1,1,1-Trichloroethane		ND	ND	ND		
Carbon Tetrachloride		ND	ND	ND		
1,2-Dichloroethane		ND	ND	ND		
Benzene		ND	ND	ND		
Trichloroethene		ND	ND	ND		
Toluene		0.052	0.076	0.056		
1,1,2-Trichloroethane		ND	ND	ND		
Tetrachloroethene		ND	ND	ND		
Chlorobenzene		ND	ND	ND		
Ethylbenzene		0.025	0.023	0.030		
m&p-Xylene		0.069	0.043	0.077		
o-Xylene		0.022	0.019	0.024		
1,1,1,2-Tetrachloroethane		ND	ND	ND		
1,1,2,2-Tetrachloroethane		ND	ND	ND		
REPORTING LIMITS		0.053	0.053	0.053		
REPORTING UNITS		ug/L	ug/L	ug/L		
SURROGATE RECOVERY:						
Trifluorotoluene		76%	106%	88%		

See Project Narrative for Data Qualifier Explanations

TEG ROCKY MOUNTAIN

Chain of Custody Record

Client: CH2M HILL
Address: 6001 Indian School NE
Albuquerque NM 87110
Phone: (505) 884-5600 Fax: (505) 883-7507
Project Manager: Sharon Mundinger

TEG Project #: 025 Date: [illegible] Page ___ of ___ Control #: ___
Client Project Number: ___
Project Name: ___
Project Address: ___

SAMPLE INFORMATION

Sampler Name: ___
Signature: ___

Sample Disposal Instructions: ___ TEG Disposal @ $5.00 each ___ Return to Client ___ Pickup

TEG USE ONLY ☑	Laboratory ID	Sample Identification	Depth	Date	Time	Matrix*	Container #	Container Size	Container Type*	Preserv. Type*	TAT*	VOC-8021	TVH-8015	TEH-8015	TRPH-418.1	BTEX-8020	[illegible]	[illegible]				
		SG-01	7'	6-6-00	1120	G						+					+	+				
		SB-02	6'	6-6-00	1300	B																
		[illegible]	6'	6-6-00	1330	B																
		[illegible]	6'	[illegible]	[illegible]	B																
		[illegible]	[illegible]	[illegible]	[illegible]	[illegible]																
		SB-06	6'	↓	1500	↓						+					+	+				
		SB-07	6'		[illegible]																	
		SB-08	7'		[illegible]	B																
		[illegible]	7'	6-7-00	0854	G																
		SB-10																				
		[illegible]																				
		[illegible]																				
		SB-13	7'		1345																	
		[illegible]	7'		1415																	
		[illegible]	7'		1445																	

Comments: ___

1. Relinquished by (print): ___	1. Received by (print): ___
Signature: ___	Signature: ___
Date: ___ Time: ___	Date: ___ Time: ___
2. Relinquished by (print): ___	2. Received by (print): ___
Signature: ___	Signature: ___
Date: ___ Time: ___	Date: ___ Time: ___

White: File Copy
Yellow: Return with Report
Pink: Client's Field C

TEG ROCKY MOUNTAIN

Chain of Custody Record

Client: [illegible]

Address: [illegible]

[illegible] 7110

Phone: [illegible] Fax: [illegible]

Project Manager: [illegible]

TEG Project #: [illegible] Date: _____ Page ___ of ___ Control #: _____

Client Project Number: _____

Project Name: _____

Project Address: _____

SAMPLE INFORMATION

Sampler Name: _____

Signature: _____

Sample Disposal Instructions

____ TEG Disposal @ $5.00 each ____ Return to Client ____ Pickup

Analyses Requested*

TEG USE ONLY ☑	Laboratory ID	Sample Identification	Depth	Date	Time	Matrix*	Container #	Container Size	Container Type*	Preserv. Type*	TAT*	VOC-8021	TVH-8015	TEH-8015	TRPH-418.1	BTEX-8020						
		SB-16	[illegible]		1510																	
		[illegible]	[illegible]		[illegible]																	
		[illegible]	[illegible]	[illegible]	[illegible]																	
				[illegible]	[illegible]	[illegible]																
		SB-20		[illegible]	0910																	
		[illegible]-21			1005																	
		[illegible]-22			1040																	
		SB-23			1300																	
		SB-24		[illegible]	1340																	
		SB-25		[illegible]	1405																	
		SB-26		[illegible]	1425																	
		SB-27			1540																	
		SB-28		[illegible]	0900																	
		SB-29			0920																	
		SB-30		[illegible]	0955																	

Comments: _____

1. Relinquished by (print): _____
Signature: _____
Date: _____ Time: _____

2. Relinquished by (print): _____
Signature: _____
Date: _____ Time: _____

1. Received by (print): _____
Signature: _____
Date: _____ Time: _____

2. Received by (print): _____
Signature: _____
Date: _____ Time: _____

White: File Copy Y[illegible]: Return with Report Pink: Client's Field Co[illegible]

teg Rocky Mountain 400 Corporate Circle, Suite R Golden, CO 80401 (303) 278-1911 FAX: (303) 278-0104 E-mail: Lab@tegRockyMountain.com

ASSAIGAI
ANALYTICAL
LABORATORIES, INC.
7300 Jefferson, NE • Albuquerque, New Mexico 87109 • (505) 345-8964 • FAX (505) 345-7259
3332 Wedgewood Dr., Suite N • El Paso, Texas 79925 • (915) 593-6000 • FAX (915) 593-7820
127 Eastgate Drive, 212-C • Los Alamos, New Mexico 87544 • (505) 662-2558

Explanation of codes

B	*analyte detected in Method Blank*
E	*result is estimated*
H	*analyzed out of hold time*
N	*tentatively identified compound*
S	*subcontracted*
1-9	*see footnote*

CH2MHILL
attn: **AMY HALLORAN**
6001 INDIAN SCHOOL RD NE STE 350
ALBUQUERQUE, NM 87110-4140

Assaigai Analytical Laboratories, Inc.

Certificate of Analysis

Client: **CH2MHILL**
Project: **0011151** **160660.02.FF.SA**

William P. Biava: President of Assaigai Analytical Laboratories, Inc.

Client Sample ID ***KAFB 1061*** Sample Matrix ***H2O*** Sample Collected ***11/16/00 17:02:00***

Group	Run Sequence	CAS #	Analyte	Result	Units	Dilution Factor	Detection Limit	Code	Run Date
0011151-01A		**SW846 ME/8015A Diesel Range Organics by GC/FID**							
X00444	XG.2000.1288-6		Diesel Range Organics	ND	mg / L	1	25		11/17/00
0011151-01B		**SW846 3510B/8270B SVOCs by GC/MS**							
X00427	XG.2000.1291-3	120-82-1	1,2,4-Trichlorobenzene	ND	ug / L	1	1		11/17/00
X00427	XG.2000.1291-3	95-50-1	1,2-Dichlorobenzene	ND	ug / L	1	1		11/17/00
X00427	XG.2000.1291-3	541-73-1	1,3-Dichlorobenzene	ND	ug / L	1	1		11/17/00
X00427	XG.2000.1291-3	106-46-7	1,4-Dichlorobenzene	ND	ug / L	1	1		11/17/00
X00427	XG.2000.1291-3	90-12-0	1-Methylnaphthalene	ND	ug / L	1	1		11/17/00
X00427	XG.2000.1291-3	58-90-2	2,3,4,6-Tetrachlorophenol	ND	ug / L	1	5		11/17/00
X00427	XG.2000.1291-3	95-95-4	2,4,5-Trichlorophenol	ND	ug / L	1	5		11/17/00
X00427	XG.2000.1291-3	88-06-2	2,4,6-Trichlorophenol	ND	ug / L	1	5		11/17/00
X00427	XG.2000.1291-3	120-83-2	2,4-Dichlorophenol	ND	ug / L	1	5		11/17/00
X00427	XG.2000.1291-3	105-67-9	2,4-Dimethylphenol	ND	ug / L	1	1		11/17/00
X00427	XG.2000.1291-3	51-28-5	2,4-Dinitrophenol	ND	ug / L	1	10		11/17/00
X00427	XG.2000.1291-3	121-14-2	2,4-Dinitrotoluene	ND	ug / L	1	5		11/17/00
X00427	XG.2000.1291-3	606-20-2	2,6-Dinitrotoluene	ND	ug / L	1	5		11/17/00
X00427	XG.2000.1291-3	91-58-7	2-Chloronaphthalene	ND	ug / L	1	1		11/17/00
X00427	XG.2000.1291-3	95-57-8	2-Chlorophenol	ND	ug / L	1	1		11/17/00
X00427	XG.2000.1291-3	91-57-6	2-Methylnaphthalene	ND	ug / L	1	1		11/17/00
X00427	XG.2000.1291-3	95-48-7	2-Methylphenol	ND	ug / L	1	1		11/17/00
X00427	XG.2000.1291-3	88-74-4	2-Nitroaniline	ND	ug / L	1	5		11/17/00
X00427	XG.2000.1291-3	88-75-5	2-Nitrophenol	ND	ug / L	1	5		11/17/00
X00427	XG.2000.1291-3		3+4 Methylphenol	ND	ug / L	1	1		11/17/00

Member:
American Council of
Independent Laboratories, Inc.

REPRODUCTION OF THIS REPORT IN LESS THAN FULL REQUIRES THE WRITTEN CONSENT OF AAL.
THIS REPORT MAY NOT BE USED IN ANY MANNER BY THE CLIENT OR ANY OTHER THIRD PARTY TO CLAIM
PRODUCT ENDORSEMENT BY ANY ACCREDITATION PROGRAM

Certificate of Analysis

Client: **CH2MHILL**

Project: **0011151** **160660.02.FF.SA**

X00427	XG.2000.1334-1	91-94-1	3,3-Dichlorobenzidine	ND	ug / L	1	10		11/17/0
X00427	XG.2000.1291-3	99-09-2	3-Nitroaniline	ND	ug / L	1	5		11/17/0
X00427	XG.2000.1291-3	534-52-1	4,6-Dinitro-2-methylphenol	ND	ug / L	1	10		11/17/0
X00427	XG.2000.1291-3	101-55-3	4-Bromophenyl-phenylether	ND	ug / L	1	1		11/17/0
X00427	XG.2000.1291-3	59-50-7	4-Chloro-3-methylphenol	ND	ug / L	1	5		11/17/0
X00427	XG.2000.1291-3	106-47-8	4-Chloroaniline	ND	ug / L	1	5		11/17/0
X00427	XG.2000.1291-3	7005-72-3	4-Chlorophenyl-phenylether	ND	ug / L	1	1		11/17/0
X00427	XG.2000.1291-3	100-01-6	4-Nitroaniline	ND	ug / L	1	5		11/17/0
X00427	XG.2000.1291-3	100-02-7	4-Nitrophenol	ND	ug / L	1	10		11/17/0
X00427	XG.2000.1291-3	83-32-9	Acenaphthene	ND	ug / L	1	1		11/17/0
X00427	XG.2000.1291-3	208-96-8	Acenaphthylene	ND	ug / L	1	1		11/17/0
X00427	XG.2000.1291-3	62-53-3	Aniline	ND	ug / L	1	10		11/17/0
X00427	XG.2000.1291-3	120-12-7	Anthracene	ND	ug / L	1	1		11/17/0
X00427	XG.2000.1291-3		Azobenzene&1,2-Diphenylhydrazine	ND	ug / L	1	1		11/17/0
X00427	XG.2000.1291-3	56-55-3	Benzo (a) anthracene	ND	ug / L	1	1		11/17/0
X00427	XG.2000.1291-3	50-32-8	Benzo(a)pyrene	ND	ug / L	1	1		11/17/0
X00427	XG.2000.1291-3		Benzo(b & k)fluoranthene	ND	ug / L	1	1		11/17/0
X00427	XG.2000.1291-3	191-24-2	Benzo(g,h,i)perylene	ND	ug / L	1	1		11/17/0
X00427	XG.2000.1291-3	64-85-0	Benzoic acid	ND	ug / L	1	25		11/17/0
X00427	XG.2000.1291-3	100-51-6	Benzyl alcohol	ND	ug / L	1	5		11/17/0
X00427	XG.2000.1291-3	111-44-4	bis (2-Chloroethyl) ether	ND	ug / L	1	1		11/17/00
X00427	XG.2000.1291-3	111-91-1	bis(2-Chloroethoxy)methane	ND	ug / L	1	1		11/17
X00427	XG.2000.1291-3	108-60-1	bis(2-Chloroisopropyl)ether	ND	ug / L	1	1		11/17
X00427	XG.2000.1291-3	117-81-7	bis(2-Ethylhexyl)phthalate	ND	ug / L	1	5		11/17/00
X00427	XG.2000.1291-3	85-68-7	Butylbenzylphthalate	ND	ug / L	1	1		11/17/00
X00427	XG.2000.1291-3	218-01-9	Chrysene	ND	ug / L	1	1		11/17/00
X00427	XG.2000.1291-3	84-74-2	di-n-Butylphthalate	ND	ug / L	1	1		11/17/00
X00427	XG.2000.1291-3	117-84-0	di-n-Octylpthalate	ND	ug / L	1	1		11/17/00
X00427	XG.2000.1291-3	53-70-3	Dibenz(a,h)anthracene	ND	ug / L	1	1		11/17/00
X00427	XG.2000.1291-3	132-64-9	Dibenzofuran	ND	ug / L	1	1		11/17/00
X00427	XG.2000.1291-3	84-66-2	Diethylphthalate	ND	ug / L	1	1		11/17/00
X00427	XG.2000.1291-3	131-11-3	Dimethylphthalate	ND	ug / L	1	1		11/17/00
X00427	XG.2000.1291-3	206-44-0	Fluoranthene	ND	ug / L	1	1		11/17/00
X00427	XG.2000.1291-3	86737	Fluorene	ND	ug / L	1	1		11/17/00
X00427	XG.2000.1291-3	118-74-1	Hexachlorobenzene	ND	ug / L	1	10		11/17/00
X00427	XG.2000.1291-3	87-68-3	Hexachlorobutadiene	ND	ug / L	1	10		11/17/00
X00427	XG.2000.1291-3	77-47-4	Hexachlorocyclopentadiene	ND	ug / L	1	10		11/17/00
X00427	XG.2000.1291-3	67-72-1	Hexachloroethane	ND	ug / L	1	5		11/17/00
X00427	XG.2000.1291-3	193-39-5	Indeno(1,2,3-cd)pyrene	ND	ug / L	1	1		11/17/00
X00427	XG.2000.1291-3	78-59-1	Isophorone	ND	ug / L	1	1		11/17/00
X00427	XG.2000.1291-3	621-64-7	n-Nitroso-di-n-propylamine	ND	ug / L	1	1		11/17/00
X00427	XG.2000.1291-3	62-75-9	n-Nitroso-dimethyl-amine	ND	ug / L	1	10		11/17/00
X00427	XG.2000.1291-3	86-30-6	n-Nitrosodiphenylamine	ND	ug / L	1	1		11/17/00
X00427	XG.2000.1291-3	91-20-3	Naphthalene	ND	ug / L	1	1		11/17/00
X00427	XG.2000.1291-3	98-95-3	Nitrobenzene	ND	ug / L	1	1		11/17/00
X00427	XG.2000.1291-3	87-86-5	Pentachlorophenol	ND	ug / L	1	10		11/17/00
X00427	XG.2000.1291-3	85-01-8	Phenanthrene	ND	ug / L	1	1		11/17/00
X00427	XG.2000.1291-3	108-95-2	Phenol	ND	ug / L	1	10		11/17

Certificate of Analysis

Client: CH2MHILL

Project: 0011151 160660.02.FF.SA

X00437	XG.2000.1291-3	129-00-0	Pyrene	ND	ug / L	1	1		11/17/00
X00437	XG.2000.1291-3	110-86-1	Pyridine	ND	ug / L	1	10		11/17/00

0011151-01C SW846 5030A/8015A GRO by GC/FID

X00445	XG.2000.1286-7		Gasoline Range Organics	ND	mg / L	1	0.05		11/18/00

0011151-01D SW846 8260A Purgeable VOCs by GC/MS

X00436	XG.2000.1298-4	75-34-3	1,1 Dichloroethane	ND	ug / L	1	1		11/20/00
X00436	XG.2000.1298-4	75-34-3	1,1 Dichloroethene	ND	ug / L	1	1		11/20/00
X00436	XG.2000.1298-4	71-55-6	1,1,1 Trichloroethane	ND	ug / L	1	1		11/20/00
X00436	XG.2000.1298-4	630-20-6	1,1,1,2 Tetrachloroethane	ND	ug / L	1	1		11/20/00
X00436	XG.2000.1298-4	79-00-5	1,1,2 Trichloroethane	ND	ug / L	1	1		11/20/00
X00436	XG.2000.1298-4	79-34-5	1,1,2,2 Tetrachloroethane	ND	ug / L	1	1		11/20/00
X00436	XG.2000.1298-4	106-93-4	1,2 Dibromoethane (EDB)	ND	ug / L	1	1		11/20/00
X00436	XG.2000.1298-4	95-50-1	1,2 Dichlorobenzene	ND	ug / L	1	1		11/20/00
X00436	XG.2000.1298-4	107-06-2	1,2 Dichloroethane	ND	ug / L	1	1		11/20/00
X00436	XG.2000.1298-4	78-87-5	1,2 Dichloropropane	ND	ug / L	1	1		11/20/00
X00436	XG.2000.1298-4	96-18-4	1,2,3 Trichloropropane	ND	ug / L	1	1		11/20/00
X00436	XG.2000.1298-4	95-63-6	1,2,4-Trimethylbenzene	ND	ug / L	1	1		11/20/00
X00436	XG.2000.1298-4	541-73-1	1,3 Dichlorobenzene	ND	ug / L	1	1		11/20/00
X00436	XG.2000.1298-4	108-67-8	1,3,5-Trimethylbenzene	ND	ug / L	1	1		11/20/00
X00436	XG.2000.1298-4	764-41-0	1,4 Dichloro-2-butene	ND	ug / L	1	10		11/20/00
X00436	XG.2000.1298-4	106-46-7	1,4 Dichlorobenzene	ND	ug / L	1	1		11/20/00
[illegible]	XG.2000.1298-4	78-93-3	2-Butanone (MEK)	ND	ug / L	1	5		11/20/00
X00436	XG.2000.1298-4	110-75-8	2-Chloroethylvinylether	ND	ug / L	1	5		11/20/00
X00436	XG.2000.1298-4	591-78-6	2-Hexanone (MBK)	ND	ug / L	1	5		11/20/00
X00436	XG.2000.1298-4	108-10-1	4-Methyl-2-pentanone (MIBK)	ND	ug / L	1	5		11/20/00
X00436	XG.2000.1298-4	67-64-1	Acetone	ND	ug / L	1	10		11/20/00
X00436	XG.2000.1298-4	107-02-8	Acrolein	ND	ug / L	1	20		11/20/00
X00436	XG.2000.1298-4	107-13-1	Acrylonitrile	ND	ug / L	1	20		11/20/00
X00436	XG.2000.1298-4	71-43-2	Benzene	1.2	ug / L	1	1		11/20/00
X00436	XG.2000.1298-4	75-27-4	Bromodichloromethane	ND	ug / L	1	1		11/20/00
X00436	XG.2000.1298-4	75-25-2	Bromoform	ND	ug / L	1	1		11/20/00
X00436	XG.2000.1298-4	74-83-9	Bromomethane	ND	ug / L	1	5		11/20/00
X00436	XG.2000.1298-4	75-15-0	Carbon disulfide	ND	ug / L	1	5		11/20/00
X00436	XG.2000.1298-4	56-23-5	Carbon tetrachloride	ND	ug / L	1	1		11/20/00
X00436	XG.2000.1298-4	108-90-7	Chlorobenzene	ND	ug / L	1	1		11/20/00
X00436	XG.2000.1298-4	124-48-1	Chlorodibromomethane	ND	ug / L	1	1		11/20/00
X00436	XG.2000.1298-4	75-00-3	Chloroethane	ND	ug / L	1	5		11/20/00
X00436	XG.2000.1298-4	67-66-3	Chloroform	ND	ug / L	1	1		11/20/00
X00436	XG.2000.1298-4	74-87-3	Chloromethane	ND	ug / L	1	5		11/20/00
X00436	XG.2000.1298-4	156-59-2	cis-1,2 dichloroethene	ND	ug / L	1	1		11/20/00
X00436	XG.2000.1298-4	10061-01-5	cis-1,3 dichloropropene	ND	ug / L	1	1		11/20/00
X00436	XG.2000.1298-4	74-95-3	Dibromomethane	ND	ug / L	1	1		11/20/00
X00436	XG.2000.1298-4	97-63-2	Ethyl methacrylate	ND	ug / L	1	5		11/20/00
X00436	XG.2000.1298-4	100-41-4	Ethylbenzene	ND	ug / L	1	1		11/20/00
X00436	XG.2000.1298-4		Freon 113	ND	ug / L	1	5		11/20/00
X00436	XG.2000.1298-4	75-71-8	Freon 12	ND	ug / L	1	10		11/20/00
[illegible]	XG.2000.1298-4	74-88-4	Iodomethane	ND	ug / L	1	5		11/20/00

Certificate of Analysis

Client: **CH2MHILL**

Project: **0011151** **160660.02.FF.SA**

X00436	XG.2000.1298-4	1634-04-4	Methyl t-butyl ether (MTBE)	ND	ug / L	1	1		11/20/00
X00436	XG.2000.1298-4	75-09-2	Methylene chloride	ND	ug / L	1	10		11/20/00
X00436	XG.2000.1298-4	91-20-3	Naphthalene	ND	ug / L	1	5		11/20/00
X00436	XG.2000.1298-4	95-47-6	o-Xylene	ND	ug / L	1	1		11/20/00
X00436	XG.2000.1298-4	108-38-3/106-42	p/m Xylenes	ND	ug / L	1	2		11/20/00
X00436	XG.2000.1298-4	100-42-5	Styrene	ND	ug / L	1	1		11/20/00
X00436	XG.2000.1298-4	156-60-5	t-1,2 Dichloroethene	ND	ug / L	1	1		11/20/00
X00436	XG.2000.1298-4	10061-02-6	t-1,3 Dichloropropene	ND	ug / L	1	1		11/20/00
X00436	XG.2000.1298-4	127-18-4	Tetrachloroethene	ND	ug / L	1	1		11/20/00
X00436	XG.2000.1298-4	108-88-3	Toluene	3.8	ug / L	1	1		11/20/00
X00436	XG.2000.1298-4	79-01-6	Trichloroethene	ND	ug / L	1	1		11/20/00
X00436	XG.2000.1298-4	75-69-4	Trichlorofluoromethane	ND	ug / L	1	5		11/20/00
X00436	XG.2000.1298-4	108-05-4	Vinyl acetate	ND	ug / L	1	5		11/20/00
X00436	XG.2000.1298-4	75-01-4	Vinyl chloride	ND	ug / L	1	5		11/20/00

Client Sample ID ***TRIP BLANK*** Sample Matrix ***H2O*** Sample Collected ***11/16/00 17:01:00***

QC Group	Run Sequence	CAS #	Analyte	Result	Units	Dilution Factor	Detection Limit	Code	Run Date
0011151-02A		**SW846 8260A Purgeable VOCs by GC/MS**							
X00436	XG.2000.1298-5	75-34-3	1,1 Dichloroethane	ND	ug / L	1	1		11/2[illegible]
X00436	XG.2000.1298-5	75-34-3	1,1 Dichloroethene	ND	ug / L	1	1		11/20/00
X00436	XG.2000.1298-5	71-55-6	1,1,1 Trichloroethane	ND	ug / L	1	1		11/20/00
X00436	XG.2000.1298-5	630-20-6	1,1,1,2 Tetrachloroethane	ND	ug / L	1	1		11/20/00
X00436	XG.2000.1298-5	79-00-5	1,1,2 Trichloroethane	ND	ug / L	1	1		11/20/00
X00436	XG.2000.1298-5	79-34-5	1,1,2,2 Tetrachloroethane	ND	ug / L	1	1		11/20/00
X00436	XG.2000.1298-5	106-93-4	1,2 Dibromoethane (EDB)	ND	ug / L	1	1		11/20/00
X00436	XG.2000.1298-5	95-50-1	1,2 Dichlorobenzene	ND	ug / L	1	1		11/20/00
X00436	XG.2000.1298-5	107-06-2	1,2 Dichloroethane	ND	ug / L	1	1		11/20/00
X00436	XG.2000.1298-5	78-87-5	1,2 Dichloropropane	ND	ug / L	1	1		11/20/00
X00436	XG.2000.1298-5	96-18-4	1,2,3 Trichloropropane	ND	ug / L	1	1		11/20/00
X00436	XG.2000.1298-5	95-63-6	1,2,4-Trimethylbenzene	ND	ug / L	1	1		11/20/00
X00436	XG.2000.1298-5	541-73-1	1,3 Dichlorobenzene	ND	ug / L	1	1		11/20/00
X00436	XG.2000.1298-5	108-67-8	1,3,5-Trimethylbenzene	ND	ug / L	1	1		11/20/00
X00436	XG.2000.1298-5	764-41-0	1,4 Dichloro-2-butene	ND	ug / L	1	10		11/20/00
X00436	XG.2000.1298-5	106-46-7	1,4 Dichlorobenzene	ND	ug / L	1	1		11/20/00
X00436	XG.2000.1298-5	78-93-3	2-Butanone (MEK)	ND	ug / L	1	5		11/20/00
X00436	XG.2000.1298-5	110-75-8	2-Chloroethylvinylether	ND	ug / L	1	5		11/20/00
X00436	XG.2000.1298-5	591-78-6	2-Hexanone (MBK)	ND	ug / L	1	5		11/20/00
X00436	XG.2000.1298-5	108-10-1	4-Methyl-2-pentanone (MIBK)	ND	ug / L	1	5		11/20/00
X00436	XG.2000.1298-5	67-64-1	Acetone	ND	ug / L	1	10		11/20/00
X00436	XG.2000.1298-5	107-02-8	Acrolein	ND	ug / L	1	20		11/20/00
X00436	XG.2000.1298-5	107-13-1	Acrylonitrile	ND	ug / L	1	20		11/20/00
X00436	XG.2000.1298-5	71-43-2	Benzene	ND	ug / L	1	1		11/20/00
X00436	XG.2000.1298-5	75-27-4	Bromodichloromethane	ND	ug / L	1	1		11/20/00
X00436	XG.2000.1298-5	75-25-2	Bromoform	ND	ug / L	1	1		11/2[illegible]

Certificate of Analysis

t: **CH2MHILL**

Project: **0011151** **160660.02.FF.SA**

X00436	XG.2000.1298-5	74-83-9	Bromomethane	ND	ug / L	1	5		11/20/00
X00436	XG.2000.1298-5	75-15-0	Carbon disulfide	8.0	ug / L	1	5		11/20/00
X00436	XG.2000.1298-5	56-23-5	Carbon tetrachloride	ND	ug / L	1	1		11/20/00
X00436	XG.2000.1298-5	108-90-7	Chlorobenzene	ND	ug / L	1	1		11/20/00
X00436	XG.2000.1298-5	124-48-1	Chlorodibromomethane	ND	ug / L	1	1		11/20/00
X00436	XG.2000.1298-5	75-00-3	Chloroethane	ND	ug / L	1	5		11/20/00
X00436	XG.2000.1298-5	67-66-3	Chloroform	ND	ug / L	1	1		11/20/00
X00436	XG.2000.1298-5	74-87-3	Chloromethane	ND	ug / L	1	5		11/20/00
X00436	XG.2000.1298-5	156-59-2	cis-1,2 dichloroethene	ND	ug / L	1	1		11/20/00
X00436	XG.2000.1298-5	10061-01-5	cis-1,3 dichloropropene	ND	ug / L	1	1		11/20/00
X00436	XG.2000.1298-5	74-95-3	Dibromomethane	ND	ug / L	1	1		11/20/00
X00436	XG.2000.1298-5	97-63-2	Ethyl methacrylate	ND	ug / L	1	5		11/20/00
X00436	XG.2000.1298-5	100-41-4	Ethylbenzene	ND	ug / L	1	1		11/20/00
X00436	XG.2000.1298-5		Freon 113	ND	ug / L	1	5		11/20/00
X00436	XG.2000.1298-5	75-71-8	Freon 12	ND	ug / L	1	10		11/20/00
X00436	XG.2000.1298-5	74-88-4	Iodomethane	ND	ug / L	1	5		11/20/00
X00436	XG.2000.1298-5	1634-04-4	Methyl t-butyl ether (MTBE)	ND	ug / L	1	1		11/20/00
X00436	XG.2000.1298-5	75-09-2	Methylene chloride	ND	ug / L	1	10		11/20/00
X00436	XG.2000.1298-5	91-20-3	Naphthalene	ND	ug / L	1	5		11/20/00
X00436	XG.2000.1298-5	95-47-6	o-Xylene	ND	ug / L	1	1		11/20/00
X00436	XG.2000.1298-5	108-38-3/106-42	p/m Xylenes	ND	ug / L	1	2		11/20/00
X00436	XG.2000.1298-5	100-42-5	Styrene	ND	ug / L	1	1		11/20/00
[illegible]	XG.2000.1298-5	156-60-5	t-1,2 Dichloroethene	ND	ug / L	1	1		11/20/00
X00436	XG.2000.1298-5	10061-02-6	t-1,3 Dichloropropene	ND	ug / L	1	1		11/20/00
X00436	XG.2000.1298-5	127-18-4	Tetrachloroethene	ND	ug / L	1	1		11/20/00
X00436	XG.2000.1298-5	108-88-3	Toluene	ND	ug / L	1	1		11/20/00
X00436	XG.2000.1298-5	79-01-6	Trichloroethene	ND	ug / L	1	1		11/20/00
X00436	XG.2000.1298-5	75-69-4	Trichlorofluoromethane	ND	ug / L	1	5		11/20/00
X00436	XG.2000.1298-5	108-05-4	Vinyl acetate	ND	ug / L	1	5		11/20/00
X00436	XG.2000.1298-5	75-01-4	Vinyl chloride	ND	ug / L	1	5		11/20/00

**** Sample specific Detection Limit is determined by multiplying the sample Dilution Factor by the listed Reporting Detection Limit. ****

**** ND = Not detected: less than the sample specific Detection Limit. Results relate only to the items tested. ****

Assaigai Analytical Laboratories, Inc.

Quality Control Summary

Client: **CH2MHILL**

ct: **0011151** **160660.02.FF.SA**

Explanation of codes	
D	*Not applicable due to sample dilution*
L	*Not applicable due to MDL proximity*

QC Type **LCS: Lab Control Spike** QC Matrix **WATER**

QC Group	Run Sequence	CAS #	Analyte	Result	Units	Dilution Factor	Detection Limit	Code	Run Date
X00427-002		**SW846 3510B/8270B SVOCs by GC/MS**							
X00427	XG.2000.1241-2	120-82-1	1,2,4-Trichlorobenzene	64	% Recovery	1	NA		11/06/00
X00427	XG.2000.1241-2	121-14-2	2,4-Dinitrotoluene	82	% Recovery	1	NA		11/06/00
X00427	XG.2000.1241-2	95-57-8	2-Chlorophenol	72	% Recovery	1	NA		11/06/00
X00427	XG.2000.1241-2	59-50-7	4-Chloro-3-methylphenol	73	% Recovery	1	NA		11/06/00
X00427	XG.2000.1241-2	100-02-7	4-Nitrophenol	33	% Recovery	1	NA		11/06/00
X00427	XG.2000.1241-2	83-32-9	Acenaphthene	80	% Recovery	1	NA		11/06/00
X00427	XG.2000.1241-2	117-84-0	di-n-Octylpthalate	93	% Recovery	1	NA		11/06/00
X00427	XG.2000.1241-2	621-64-7	n-Nitroso-di-n-propylamine	95	% Recovery	1	NA		11/06/00
X00427	XG.2000.1241-2	87-86-5	Pentachlorophenol	88	% Recovery	1	NA		11/06/00
X00427	XG.2000.1241-2	108-95-2	Phenol	31	% Recovery	1	NA		11/06/00
X00427	XG.2000.1241-2	129-00-0	Pyrene	85	% Recovery	1	NA		11/06/00
X00436-003		**SW846 8260A Purgeable VOCs by GC/MS**							
X00436	XG.2000.1263-3	75-34-3	1,1 Dichloroethene	111	% Recovery	1	NA		11/13/00
X00436	XG.2000.1263-3	106-46-7	1,4 Dichlorobenzene	108	% Recovery	1	NA		11/13/00
X00436	XG.2000.1263-3	71-43-2	Benzene	113	% Recovery	1	NA		11/13/00
X00436	XG.2000.1263-3	108-90-7	Chlorobenzene	111	% Recovery	1	NA		11/13/00
6	XG.2000.1263-3	108-88-3	Toluene	113	% Recovery	1	NA		11/13/00
X00436	XG.2000.1263-3	79-01-6	Trichloroethene	113	% Recovery	1	NA		11/13/00
X00444-002		**SW846 ME/8015A Diesel Range Organics by GC/FID**							
X00444	XG.2000.1288-2		Diesel Range Organics	88	% Recovery	1	NA		11/17/00
X00445-002		**SW846 5030A/8015A GRO by GC/FID**							
X00445	XG.2000.1286-5		Gasoline Range Organics	100	% Recovery	1	NA		11/18/00

QC Type **LCSD: Lab Control Spike Duplicate Accuracy** QC Matrix **WATER**

QC Group	Run Sequence	CAS #	Analyte	Result	Units	Dilution Factor	Detection Limit	Code	Run Date
X00427-003		**SW846 3510B/8270B SVOCs by GC/MS**							
X00427	XG.2000.1241-3	120-82-1	1,2,4-Trichlorobenzene	70	% Recovery	1	NA		11/06/00
X00427	XG.2000.1241-3	121-14-2	2,4-Dinitrotoluene	84	% Recovery	1	NA		11/06/00
X00427	XG.2000.1241-3	95-57-8	2-Chlorophenol	67	% Recovery	1	NA		11/06/00
X00427	XG.2000.1241-3	59-50-7	4-Chloro-3-methylphenol	69	% Recovery	1	NA		11/06/00
X00427	XG.2000.1241-3	100-02-7	4-Nitrophenol	34	% Recovery	1	NA		11/06/00
X00427	XG.2000.1241-3	83-32-9	Acenaphthene	84	% Recovery	1	NA		11/06/00
X00427	XG.2000.1241-3	117-84-0	di-n-Octylpthalate	93	% Recovery	1	NA		11/06/00
X00427	XG.2000.1241-3	621-64-7	n-Nitroso-di-n-propylamine	97	% Recovery	1	NA		11/06/00
X00427	XG.2000.1241-3	87-86-5	Pentachlorophenol	90	% Recovery	1	NA		11/06/00
X00427	XG.2000.1241-3	108-95-2	Phenol	30	% Recovery	1	NA		11/06/00
X00427	XG.2000.1241-3	129-00-0	Pyrene	87	% Recovery	1	NA		11/06/00

Quality Control Summary

Client: CH2MHILL

Project: 0011151 160660.02.FF.SA

Explanation of codes

D	*Not applicable due to sample dilu*
L	*Not applicable due to MDL proxim*

X00436-004		**SW846 8260A Purgeable VOCs by GC/MS**							
X00436	XG.2000.1263-4	75-34-3	1,1 Dichloroethene	110	% Recovery	1	NA		11/13/00
X00436	XG.2000.1263-4	106-46-7	1,4 Dichlorobenzene	106	% Recovery	1	NA		11/13/00
X00436	XG.2000.1263-4	71-43-2	Benzene	113	% Recovery	1	NA		11/13/00
X00436	XG.2000.1263-4	108-90-7	Chlorobenzene	111	% Recovery	1	NA		11/13/00
X00436	XG.2000.1263-4	108-88-3	Toluene	114	% Recovery	1	NA		11/13/00
X00436	XG.2000.1263-4	79-01-6	Trichloroethene	113	% Recovery	1	NA		11/13/00
X00444-003		**SW846 ME/8015A Diesel Range Organics by GC/FID**							
X00444	XG.2000.1288-3		Diesel Range Organics	90	% Recovery	1	NA		11/17/00
X00445-003		**SW846 5030A/8015A GRO by GC/FID**							
X00445	XG.2000.1286-6		Gasoline Range Organics	102	% Recovery	1	NA		11/18/00

QC Type **LCSD: Lab Control Spike Duplicate Precision** QC Matrix **WATER**

QC Group	Run Sequence	CAS #	Analyte	Result	Units	Dilution Factor	Detection Limit	Code	Run Date
X00427-003		**SW846 3510B/8270B SVOCs by GC/MS**							
X00427	XG.2000.1241-3	120-82-1	1,2,4-Trichlorobenzene	9	RPD	1	NA		11/06/00
X00427	XG.2000.1241-3	121-14-2	2,4-Dinitrotoluene	3	RPD	1	NA		11/06/00
X00427	XG.2000.1241-3	95-57-8	2-Chlorophenol	8	RPD	1	NA		11/06/00
X00427	XG.2000.1241-3	59-50-7	4-Chloro-3-methylphenol	5	RPD	1	NA		11/06
X00427	XG.2000.1241-3	100-02-7	4-Nitrophenol	2	RPD	1	NA		11/06/00
X00427	XG.2000.1241-3	83-32-9	Acenaphthene	4	RPD	1	NA		11/06/00
X00427	XG.2000.1241-3	117-84-0	di-n-Octylpthalate	< 1	RPD	1	NA		11/06/00
X00427	XG.2000.1241-3	621-64-7	n-Nitroso-di-n-propylamine	2	RPD	1	NA		11/06/00
X00427	XG.2000.1241-3	87-86-5	Pentachlorophenol	1	RPD	1	NA		11/06/00
X00427	XG.2000.1241-3	108-95-2	Phenol	4	RPD	1	NA		11/06/00
X00427	XG.2000.1241-3	129-00-0	Pyrene	2	RPD	1	NA		11/06/00
X00436-004		**SW846 8260A Purgeable VOCs by GC/MS**							
X00436	XG.2000.1263-4	75-34-3	1,1 Dichloroethene	1	RPD	1	NA		11/13/00
X00436	XG.2000.1263-4	106-46-7	1,4 Dichlorobenzene	1	RPD	1	NA		11/13/00
X00436	XG.2000.1263-4	71-43-2	Benzene	< 1	RPD	1	NA		11/13/00
X00436	XG.2000.1263-4	108-90-7	Chlorobenzene	< 1	RPD	1	NA		11/13/00
X00436	XG.2000.1263-4	108-88-3	Toluene	< 1	RPD	1	NA		11/13/00
X00436	XG.2000.1263-4	79-01-6	Trichloroethene	< 1	RPD	1	NA		11/13/00
X00444-003		**SW846 ME/8015A Diesel Range Organics by GC/FID**							
X00444	XG.2000.1288-3		Diesel Range Organics	1	RPD	1	NA		11/17/00
X00445-003		**SW846 5030A/8015A GRO by GC/FID**							
X00445	XG.2000.1286-6		Gasoline Range Organics	2	RPD	1	NA		11/18/00

Quality Control Summary

Client: CH2MHILL

Project: 0011151 160660.02.FF.SA

Explanation of codes

D	Not applicable due to sample dilution
L	Not applicable due to MDL proximity

QC Type: **MB: Method Blank**

QC Matrix: **WATER**

QC Group	Run Sequence	CAS #	Analyte	Result	Units	Dilution Factor	Detection Limit	Code	Run Date
X00427-001		SW846 3510B/8270B SVOCs by GC/MS							
X00427	XG.2000.1241-1	120-82-1	1,2,4-Trichlorobenzene	ND	ug / L	1	1		11/06/00
X00427	XG.2000.1241-1	95-50-1	1,2-Dichlorobenzene	ND	ug / L	1	1		11/06/00
X00427	XG.2000.1241-1	541-73-1	1,3-Dichlorobenzene	ND	ug / L	1	1		11/06/00
X00427	XG.2000.1241-1	90-12-0	1-Methylnaphthalene	ND	ug / L	1	1		11/06/00
X00427	XG.2000.1241-1	58-90-2	2,3,4,6-Tetrachlorophenol	ND	ug / L	1	5		11/06/00
X00427	XG.2000.1241-1	95-95-4	2,4,5-Trichlorophenol	ND	ug / L	1	5		11/06/00
X00427	XG.2000.1241-1	88-06-2	2,4,6-Trichlorophenol	ND	ug / L	1	5		11/06/00
X00427	XG.2000.1241-1	120-83-2	2,4-Dichlorophenol	ND	ug / L	1	5		11/06/00
X00427	XG.2000.1241-1	105-67-9	2,4-Dimethylphenol	ND	ug / L	1	1		11/06/00
X00427	XG.2000.1241-1	51-28-5	2,4-Dinitrophenol	ND	ug / L	1	10		11/06/00
X00427	XG.2000.1241-1	121-14-2	2,4-Dinitrotoluene	ND	ug / L	1	5		11/06/00
X00427	XG.2000.1241-1	606-20-2	2,6-Dinitrotoluene	ND	ug / L	1	5		11/06/00
X00427	XG.2000.1241-1	91-58-7	2-Chloronaphthalene	ND	ug / L	1	1		11/06/00
X00427	XG.2000.1241-1	95-57-8	2-Chlorophenol	ND	ug / L	1	1		11/06/00
X00427	XG.2000.1241-1	91-57-6	2-Methylnaphthalene	ND	ug / L	1	1		11/06/00
X00427	XG.2000.1241-1	95-48-7	2-Methylphenol	ND	ug / L	1	1		11/06/00
7	XG.2000.1241-1	88-74-4	2-Nitroaniline	ND	ug / L	1	5		11/06/00
27	XG.2000.1241-1	88-75-5	2-Nitrophenol	ND	ug / L	1	5		11/06/00
X00427	XG.2000.1241-1		3+4 Methylphenol	ND	ug / L	1	1		11/06/00
X00427	XG.2000.1241-1	99-09-2	3-Nitroaniline	ND	ug / L	1	5		11/06/00
X00427	XG.2000.1241-1	534-52-1	4,6-Dinitro-2-methylphenol	ND	ug / L	1	10		11/06/00
X00427	XG.2000.1241-1	101-55-3	4-Bromophenyl-phenylether	ND	ug / L	1	1		11/06/00
X00427	XG.2000.1241-1	59-50-7	4-Chloro-3-methylphenol	ND	ug / L	1	5		11/06/00
X00427	XG.2000.1241-1	106-47-8	4-Chloroaniline	ND	ug / L	1	5		11/06/00
X00427	XG.2000.1241-1	7005-72-3	4-Chlorophenyl-phenylether	ND	ug / L	1	1		11/06/00
X00427	XG.2000.1241-1	100-01-6	4-Nitroaniline	ND	ug / L	1	5		11/06/00
X00427	XG.2000.1241-1	100-02-7	4-Nitrophenol	ND	ug / L	1	10		11/06/00
X00427	XG.2000.1241-1	83-32-9	Acenaphthene	ND	ug / L	1	1		11/06/00
X00427	XG.2000.1241-1	208-96-8	Acenaphthylene	ND	ug / L	1	1		11/06/00
X00427	XG.2000.1241-1	62-53-3	Aniline	ND	ug / L	1	10		11/06/00
X00427	XG.2000.1241-1	120-12-7	Anthracene	ND	ug / L	1	1		11/06/00
X00427	XG.2000.1241-1		Azobenzene&1,2-Diphenylhydrazine	ND	ug / L	1	1		11/06/00
X00427	XG.2000.1241-1	56-55-3	Benzo (a) anthracene	ND	ug / L	1	1		11/06/00
X00427	XG.2000.1241-1	50-32-8	Benzo(a)pyrene	ND	ug / L	1	1		11/06/00
X00427	XG.2000.1241-1		Benzo(b & k)fluoranthene	ND	ug / L	1	1		11/06/00
X00427	XG.2000.1241-1	191-24-2	Benzo(g,h,i)perylene	ND	ug / L	1	1		11/06/00
X00427	XG.2000.1241-1	64-85-0	Benzoic acid	ND	ug / L	1	25		11/06/00
X00427	XG.2000.1241-1	100-51-6	Benzyl alcohol	ND	ug / L	1	5		11/06/00
X00427	XG.2000.1241-1	111-44-4	bis (2-Chloroethyl) ether	ND	ug / L	1	1		11/06/00
X00427	XG.2000.1241-1	111-91-1	bis(2-Chloroethoxy)methane	ND	ug / L	1	1		11/06/00
X00427	XG.2000.1241-1	108-60-1	bis(2-Chloroisopropyl)ether	ND	ug / L	1	1		11/06/00
7	XG.2000.1241-1	117-81-7	bis(2-Ethylhexyl)phthalate	ND	ug / L	1	5		11/06/00

Quality Control Summary

Client: CH2MHILL

Project: 0011151 160660.02.FF.SA

Explanation of codes

D	*Not applicable due to sample dilut*
L	*Not applicable due to MDL proxim*

X00427	XG.2000.1241-1	85-68-7	Butylbenzylphthalate	ND	ug / L	1	1		11/06/00
X00427	XG.2000.1241-1	218-01-9	Chrysene	ND	ug / L	1	1		11/06/00
X00427	XG.2000.1241-1	84-74-2	di-n-Butylphthalate	ND	ug / L	1	1		11/06/00
X00427	XG.2000.1241-1	117-84-0	di-n-Octylpthalate	ND	ug / L	1	1		11/06/00
X00427	XG.2000.1241-1	53-70-3	Dibenz(a,h)anthracene	ND	ug / L	1	1		11/06/00
X00427	XG.2000.1241-1	132-64-9	Dibenzofuran	ND	ug / L	1	1		11/06/00
X00427	XG.2000.1241-1	84-66-2	Diethylphthalate	ND	ug / L	1	1		11/06/00
X00427	XG.2000.1241-1	131-11-3	Dimethylphthalate	ND	ug / L	1	1		11/06/00
X00427	XG.2000.1241-1	206-44-0	Fluoranthene	ND	ug / L	1	1		11/06/00
X00427	XG.2000.1241-1	86737	Fluorene	ND	ug / L	1	1		11/06/00
X00427	XG.2000.1241-1	118-74-1	Hexachlorobenzene	ND	ug / L	1	10		11/06/00
X00427	XG.2000.1241-1	87-68-3	Hexachlorobutadiene	ND	ug / L	1	10		11/06/00
X00427	XG.2000.1241-1	77-47-4	Hexachlorocyclopentadiene	ND	ug / L	1	10		11/06/00
X00427	XG.2000.1241-1	67-72-1	Hexachloroethane	ND	ug / L	1	5		11/06/00
X00427	XG.2000.1241-1	193-39-5	Indeno(1,2,3-cd)pyrene	ND	ug / L	1	1		11/06/00
X00427	XG.2000.1241-1	78-59-1	Isophorone	ND	ug / L	1	1		11/06/00
X00427	XG.2000.1241-1	621-64-7	n-Nitroso-di-n-propylamine	ND	ug / L	1	1		11/06/00
X00427	XG.2000.1241-1	62-75-9	n-Nitroso-dimethyl-amine	ND	ug / L	1	10		11/06/00
X00427	XG.2000.1241-1	86-30-6	n-Nitrosodiphenylamine	ND	ug / L	1	1		11/06/00
X00427	XG.2000.1241-1	91-20-3	Naphthalene	ND	ug / L	1	1		11/06/00
X00427	XG.2000.1241-1	98-95-3	Nitrobenzene	ND	ug / L	1	1		11/06/00
X00427	XG.2000.1241-1	87-86-5	Pentachlorophenol	ND	ug / L	1	10		11/06/00
X00427	XG.2000.1241-1	85-01-8	Phenanthrene	ND	ug / L	1	1		11/06/00
X00427	XG.2000.1241-1	108-95-2	Phenol	ND	ug / L	1	10		11/06
X00427	XG.2000.1241-1	129-00-0	Pyrene	ND	ug / L	1	1		11/06
X00427	XG.2000.1241-1	110-86-1	Pyridine	ND	ug / L	1	10		11/06/00
X00427-014		**SW846 3510B/8270B SVOCs by GC/MS**							
X00427	XG.2000.1255-4	120-82-1	1,2,4-Trichlorobenzene	ND	ug / L	1	1		11/09/00
X00427	XG.2000.1255-4	95-50-1	1,2-Dichlorobenzene	ND	ug / L	1	1		11/09/00
X00427	XG.2000.1255-4	541-73-1	1,3-Dichlorobenzene	ND	ug / L	1	1		11/09/00
X00427	XG.2000.1255-4	90-12-0	1-Methylnaphthalene	ND	ug / L	1	1		11/09/00
X00427	XG.2000.1255-4	58-90-2	2,3,4,6-Tetrachlorophenol	ND	ug / L	1	5		11/09/00
X00427	XG.2000.1255-4	95-95-4	2,4,5-Trichlorophenol	ND	ug / L	1	5		11/09/00
X00427	XG.2000.1255-4	88-06-2	2,4,6-Trichlorophenol	ND	ug / L	1	5		11/09/00
X00427	XG.2000.1255-4	120-83-2	2,4-Dichlorophenol	ND	ug / L	1	5		11/09/00
X00427	XG.2000.1255-4	105-67-9	2,4-Dimethylphenol	ND	ug / L	1	1		11/09/00
X00427	XG.2000.1255-4	51-28-5	2,4-Dinitrophenol	ND	ug / L	1	10		11/09/00
X00427	XG.2000.1255-4	121-14-2	2,4-Dinitrotoluene	ND	ug / L	1	5		11/09/00
X00427	XG.2000.1255-4	606-20-2	2,6-Dinitrotoluene	ND	ug / L	1	5		11/09/00
X00427	XG.2000.1255-4	91-58-7	2-Chloronaphthalene	ND	ug / L	1	1		11/09/00
X00427	XG.2000.1255-4	95-57-8	2-Chlorophenol	ND	ug / L	1	1		11/09/00
X00427	XG.2000.1255-4	91-57-6	2-Methylnaphthalene	ND	ug / L	1	1		11/09/00
X00427	XG.2000.1255-4	95-48-7	2-Methylphenol	ND	ug / L	1	1		11/09/00
X00427	XG.2000.1255-4	88-74-4	2-Nitroaniline	ND	ug / L	1	5		11/09/00
X00427	XG.2000.1255-4	88-75-5	2-Nitrophenol	ND	ug / L	1	5		11/09/00
X00427	XG.2000.1255-4		3+4 Methylphenol	ND	ug / L	1	1		11/09/00
X00427	XG.2000.1255-4	99-09-2	3-Nitroaniline	ND	ug / L	1	5		11/09/00
X00427	XG.2000.1255-4	534-52-1	4,6-Dinitro-2-methylphenol	ND	ug / L	1	10		11/09/00
X00427	XG.2000.1255-4	101-55-3	4-Bromophenyl-phenylether	ND	ug / L	1	1		11/09/
X00427	XG.2000.1255-4	59-50-7	4-Chloro-3-methylphenol	ND	ug / L	1	5		11/09

Quality Control Summary

Client: CH2MHILL

Project: 0011151 160660.02.FF.SA

Explanation of codes

D	Not applicable due to sample dilution
L	Not applicable due to MDL proximity

X00427	XG.2000.1255-4	106-47-8	4-Chloroaniline	ND	ug / L	1	5		11/09/00
X00427	XG.2000.1255-4	7005-72-3	4-Chlorophenyl-phenylether	ND	ug / L	1	1		11/09/00
X00427	XG.2000.1255-4	100-01-6	4-Nitroaniline	ND	ug / L	1	5		11/09/00
X00427	XG.2000.1255-4	100-02-7	4-Nitrophenol	ND	ug / L	1	10		11/09/00
X00427	XG.2000.1255-4	83-32-9	Acenaphthene	ND	ug / L	1	1		11/09/00
X00427	XG.2000.1255-4	208-96-8	Acenaphthylene	ND	ug / L	1	1		11/09/00
X00427	XG.2000.1255-4	62-53-3	Aniline	ND	ug / L	1	10		11/09/00
X00427	XG.2000.1255-4	120-12-7	Anthracene	ND	ug / L	1	1		11/09/00
X00427	XG.2000.1255-4		Azobenzene&1,2-Diphenylhydrazine	ND	ug / L	1	1		11/09/00
X00427	XG.2000.1255-4	56-55-3	Benzo (a) anthracene	ND	ug / L	1	1		11/09/00
X00427	XG.2000.1255-4	50-32-8	Benzo(a)pyrene	ND	ug / L	1	1		11/09/00
X00427	XG.2000.1255-4		Benzo(b & k)fluoranthene	ND	ug / L	1	1		11/09/00
X00427	XG.2000.1255-4	191-24-2	Benzo(g,h,i)perylene	ND	ug / L	1	1		11/09/00
X00427	XG.2000.1255-4	64-85-0	Benzoic acid	ND	ug / L	1	25		11/09/00
X00427	XG.2000.1255-4	100-51-6	Benzyl alcohol	ND	ug / L	1	5		11/09/00
X00427	XG.2000.1255-4	111-44-4	bis (2-Chloroethyl) ether	ND	ug / L	1	1		11/09/00
X00427	XG.2000.1255-4	111-91-1	bis(2-Chloroethoxy)methane	ND	ug / L	1	1		11/09/00
X00427	XG.2000.1255-4	108-60-1	bis(2-Chloroisopropyl)ether	ND	ug / L	1	1		11/09/00
X00427	XG.2000.1255-4	117-81-7	bis(2-Ethylhexyl)phthalate	ND	ug / L	1	5		11/09/00
X00427	XG.2000.1255-4	85-68-7	Butylbenzylphthalate	ND	ug / L	1	1		11/09/00
X00427	XG.2000.1255-4	218-01-9	Chrysene	ND	ug / L	1	1		11/09/00
X00427	XG.2000.1255-4	84-74-2	di-n-Butylphthalate	ND	ug / L	1	1		11/09/00
X00427	XG.2000.1255-4	117-84-0	di-n-Octylpthalate	ND	ug / L	1	1		11/09/00
X00427	XG.2000.1255-4	53-70-3	Dibenz(a,h)anthracene	ND	ug / L	1	1		11/09/00
X00427	XG.2000.1255-4	132-64-9	Dibenzofuran	ND	ug / L	1	1		11/09/00
X00427	XG.2000.1255-4	84-66-2	Diethylphthalate	ND	ug / L	1	1		11/09/00
X00427	XG.2000.1255-4	131-11-3	Dimethylphthalate	ND	ug / L	1	1		11/09/00
X00427	XG.2000.1255-4	206-44-0	Fluoranthene	ND	ug / L	1	1		11/09/00
X00427	XG.2000.1255-4	86737	Fluorene	ND	ug / L	1	1		11/09/00
X00427	XG.2000.1255-4	118-74-1	Hexachlorobenzene	ND	ug / L	1	10		11/09/00
X00427	XG.2000.1255-4	87-68-3	Hexachlorobutadiene	ND	ug / L	1	10		11/09/00
X00427	XG.2000.1255-4	77-47-4	Hexachlorocyclopentadiene	ND	ug / L	1	10		11/09/00
X00427	XG.2000.1255-4	67-72-1	Hexachloroethane	ND	ug / L	1	5		11/09/00
X00427	XG.2000.1255-4	193-39-5	Indeno(1,2,3-cd)pyrene	ND	ug / L	1	1		11/09/00
X00427	XG.2000.1255-4	78-59-1	Isophorone	ND	ug / L	1	1		11/09/00
X00427	XG.2000.1255-4	621-64-7	n-Nitroso-di-n-propylamine	ND	ug / L	1	1		11/09/00
X00427	XG.2000.1255-4	62-75-9	n-Nitroso-dimethyl-amine	ND	ug / L	1	10		11/09/00
X00427	XG.2000.1255-4	86-30-6	n-Nitrosodiphenylamine	ND	ug / L	1	1		11/09/00
X00427	XG.2000.1255-4	91-20-3	Naphthalene	ND	ug / L	1	1		11/09/00
X00427	XG.2000.1255-4	98-95-3	Nitrobenzene	ND	ug / L	1	1		11/09/00
X00427	XG.2000.1255-4	87-86-5	Pentachlorophenol	ND	ug / L	1	10		11/09/00
X00427	XG.2000.1255-4	85-01-8	Phenanthrene	ND	ug / L	1	1		11/09/00
X00427	XG.2000.1255-4	108-95-2	Phenol	ND	ug / L	1	10		11/09/00
X00427	XG.2000.1255-4	129-00-0	Pyrene	ND	ug / L	1	1		11/09/00
X00427	XG.2000.1255-4	110-86-1	Pyridine	ND	ug / L	1	10		11/09/00
X00427-019		**SW846 3510B/8270B SVOCs by GC/MS**							
X00427	XG.2000.1248-11	120-82-1	1,2,4-Trichlorobenzene	ND	ug / L	1	1		11/08/00
X00427	XG.2000.1248-11	95-50-1	1,2-Dichlorobenzene	ND	ug / L	1	1		11/08/00
X00427	XG.2000.1248-11	541-73-1	1,3-Dichlorobenzene	ND	ug / L	1	1		11/08/00

Quality Control Summary

Client: CH2MHILL

Project: 0011151 160660.02.FF.SA

Explanation of codes

D Not applicable due to sample dilu

L Not applicable due to MDL proxim

X00427	XG 2000.1248-11	90-12-0	1-Methylnaphthalene	ND	ug / L	1	1		11/08/00
X00427	XG 2000.1248-11	58-90-2	2,3,4,6-Tetrachlorophenol	ND	ug / L	1	5		11/08/00
X00427	XG 2000.1248-11	95-95-4	2,4,5-Trichlorophenol	ND	ug / L	1	5		11/08/00
X00427	XG 2000.1248-11	88-06-2	2,4,6-Trichlorophenol	ND	ug / L	1	5		11/08/00
X00427	XG 2000.1248-11	120-83-2	2,4-Dichlorophenol	ND	ug / L	1	5		11/08/00
X00427	XG 2000.1248-11	105-67-9	2,4-Dimethylphenol	ND	ug / L	1	1		11/08/00
X00427	XG 2000.1248-11	51-28-5	2,4-Dinitrophenol	ND	ug / L	1	10		11/08/00
X00427	XG 2000.1248-11	121-14-2	2,4-Dinitrotoluene	ND	ug / L	1	5		11/08/00
X00427	XG 2000.1248-11	606-20-2	2,6-Dinitrotoluene	ND	ug / L	1	5		11/08/00
X00427	XG 2000.1248-11	91-58-7	2-Chloronaphthalene	ND	ug / L	1	1		11/08/00
X00427	XG 2000.1248-11	95-57-8	2-Chlorophenol	ND	ug / L	1	1		11/08/00
X00427	XG 2000.1248-11	91-57-6	2-Methylnaphthalene	ND	ug / L	1	1		11/08/00
X00427	XG 2000.1248-11	95-48-7	2-Methylphenol	ND	ug / L	1	1		11/08/00
X00427	XG 2000.1248-11	88-74-4	2-Nitroaniline	ND	ug / L	1	5		11/08/00
X00427	XG 2000.1248-11	88-75-5	2-Nitrophenol	ND	ug / L	1	5		11/08/00
X00427	XG 2000.1248-11		3+4 Methylphenol	ND	ug / L	1	1		11/08/00
X00427	XG 2000.1248-11	99-09-2	3-Nitroaniline	ND	ug / L	1	5		11/08/00
X00427	XG 2000.1248-11	534-52-1	4,6-Dinitro-2-methylphenol	ND	ug / L	1	10		11/08/00
X00427	XG 2000.1248-11	101-55-3	4-Bromophenyl-phenylether	ND	ug / L	1	1		11/08/00
X00427	XG 2000.1248-11	59-50-7	4-Chloro-3-methylphenol	ND	ug / L	1	5		11/08/00
X00427	XG 2000.1248-11	106-47-8	4-Chloroaniline	ND	ug / L	1	5		11/08/00
X00427	XG 2000.1248-11	7005-72-3	4-Chlorophenyl-phenylether	ND	ug / L	1	1		11/08/00
X00427	XG 2000.1248-11	100-01-6	4-Nitroaniline	ND	ug / L	1	5		11/08/00
X00427	XG 2000.1248-11	100-02-7	4-Nitrophenol	ND	ug / L	1	10		11/08
X00427	XG 2000.1248-11	83-32-9	Acenaphthene	ND	ug / L	1	1		11/08
X00427	XG 2000.1248-11	208-96-8	Acenaphthylene	ND	ug / L	1	1		11/08/00
X00427	XG 2000.1248-11	62-53-3	Aniline	ND	ug / L	1	10		11/08/00
X00427	XG 2000.1248-11	120-12-7	Anthracene	ND	ug / L	1	1		11/08/00
X00427	XG 2000.1248-11		Azobenzene&1,2-Diphenylhydrazine	ND	ug / L	1	1		11/08/00
X00427	XG 2000.1248-11	56-55-3	Benzo (a) anthracene	ND	ug / L	1	1		11/08/00
X00427	XG 2000.1248-11	50-32-8	Benzo(a)pyrene	ND	ug / L	1	1		11/08/00
X00427	XG 2000.1248-11		Benzo(b & k)fluoranthene	ND	ug / L	1	1		11/08/00
X00427	XG 2000.1248-11	191-24-2	Benzo(g,h,i)perylene	ND	ug / L	1	1		11/08/00
X00427	XG 2000.1248-11	64-85-0	Benzoic acid	ND	ug / L	1	25		11/08/00
X00427	XG 2000.1248-11	100-51-6	Benzyl alcohol	ND	ug / L	1	5		11/08/00
X00427	XG 2000.1248-11	111-44-4	bis (2-Chloroethyl) ether	ND	ug / L	1	1		11/08/00
X00427	XG 2000.1248-11	111-91-1	bis(2-Chloroethoxy)methane	ND	ug / L	1	1		11/08/00
X00427	XG 2000.1248-11	108-60-1	bis(2-Chloroisopropyl)ether	ND	ug / L	1	1		11/08/00
X00427	XG 2000.1248-11	117-81-7	bis(2-Ethylhexyl)phthalate	ND	ug / L	1	5		11/08/00
X00427	XG 2000.1248-11	85-68-7	Butylbenzylphthalate	ND	ug / L	1	1		11/08/00
X00427	XG 2000.1248-11	218-01-9	Chrysene	ND	ug / L	1	1		11/08/00
X00427	XG 2000.1248-11	84-74-2	di-n-Butylphthalate	ND	ug / L	1	1		11/08/00
X00427	XG 2000.1248-11	117-84-0	di-n-Octylpthalate	ND	ug / L	1	1		11/08/00
X00427	XG 2000.1248-11	53-70-3	Dibenz(a,h)anthracene	ND	ug / L	1	1		11/08/00
X00427	XG 2000.1248-11	132-64-9	Dibenzofuran	ND	ug / L	1	1		11/08/00
X00427	XG 2000.1248-11	84-66-2	Diethylphthalate	ND	ug / L	1	1		11/08/00
X00427	XG 2000.1248-11	131-11-3	Dimethylphthalate	ND	ug / L	1	1		11/08/00
X00427	XG 2000.1248-11	206-44-0	Fluoranthene	ND	ug / L	1	1		11/08/00
X00427	XG 2000.1248-11	86737	Fluorene	ND	ug / L	1	1		11/08
X00427	XG 2000.1248-11	118-74-1	Hexachlorobenzene	ND	ug / L	1	10		11/08

Quality Control Summary

Client: **CH2MHILL**

Project: **0011151** **160660.02.FF.SA**

Explanation of codes

D	*Not applicable due to sample dilution*
L	*Not applicable due to MDL proximity*

X00427	XG.2000.1248-11	87-68-3	Hexachlorobutadiene	ND	ug / L	1	10		11/08/00
X00427	XG.2000.1248-11	77-47-4	Hexachlorocyclopentadiene	ND	ug / L	1	10		11/08/00
X00427	XG.2000.1248-11	67-72-1	Hexachloroethane	ND	ug / L	1	5		11/08/00
X00427	XG.2000.1248-11	193-39-5	Indeno(1,2,3-cd)pyrene	ND	ug / L	1	1		11/08/00
X00427	XG.2000.1248-11	78-59-1	Isophorone	ND	ug / L	1	1		11/08/00
X00427	XG.2000.1248-11	621-64-7	n-Nitroso-di-n-propylamine	ND	ug / L	1	1		11/08/00
X00427	XG.2000.1248-11	62-75-9	n-Nitroso-dimethyl-amine	ND	ug / L	1	10		11/08/00
X00427	XG.2000.1248-11	86-30-6	n-Nitrosodiphenylamine	ND	ug / L	1	1		11/08/00
X00427	XG.2000.1248-11	91-20-3	Naphthalene	ND	ug / L	1	1		11/08/00
X00427	XG.2000.1248-11	98-95-3	Nitrobenzene	ND	ug / L	1	1		11/08/00
X00427	XG.2000.1248-11	87-86-5	Pentachlorophenol	ND	ug / L	1	10		11/08/00
X00427	XG.2000.1248-11	85-01-8	Phenanthrene	ND	ug / L	1	1		11/08/00
X00427	XG.2000.1248-11	108-95-2	Phenol	ND	ug / L	1	10		11/08/00
X00427	XG.2000.1248-11	129-00-0	Pyrene	ND	ug / L	1	1		11/08/00
X00427	XG.2000.1248-11	110-86-1	Pyridine	ND	ug / L	1	10		11/08/00
X00427-022		**SW846 3510B/8270B SVOCs by GC/MS**							
X00427	XG.2000.1268-1	120-82-1	1,2,4-Trichlorobenzene	ND	ug / L	1	1		11/09/00
X00427	XG.2000.1268-1	95-50-1	1,2-Dichlorobenzene	ND	ug / L	1	1		11/09/00
X00427	XG.2000.1268-1	541-73-1	1,3-Dichlorobenzene	ND	ug / L	1	1		11/09/00
X00427	XG.2000.1268-1	90-12-0	1-Methylnaphthalene	ND	ug / L	1	1		11/09/00
X00427	XG.2000.1268-1	58-90-2	2,3,4,6-Tetrachlorophenol	ND	ug / L	1	5		11/09/00
X00427	XG.2000.1268-1	95-95-4	2,4,5-Trichlorophenol	ND	ug / L	1	5		11/09/00
X00427	XG.2000.1268-1	88-06-2	2,4,6-Trichlorophenol	ND	ug / L	1	5		11/09/00
[illegible]7	XG.2000.1268-1	120-83-2	2,4-Dichlorophenol	ND	ug / L	1	5		11/09/00
X00427	XG.2000.1268-1	105-67-9	2,4-Dimethylphenol	ND	ug / L	1	1		11/09/00
X00427	XG.2000.1268-1	51-28-5	2,4-Dinitrophenol	ND	ug / L	1	10		11/09/00
X00427	XG.2000.1268-1	121-14-2	2,4-Dinitrotoluene	ND	ug / L	1	5		11/09/00
X00427	XG.2000.1268-1	606-20-2	2,6-Dinitrotoluene	ND	ug / L	1	5		11/09/00
X00427	XG.2000.1268-1	91-58-7	2-Chloronaphthalene	ND	ug / L	1	1		11/09/00
X00427	XG.2000.1268-1	95-57-8	2-Chlorophenol	ND	ug / L	1	1		11/09/00
X00427	XG.2000.1268-1	91-57-6	2-Methylnaphthalene	ND	ug / L	1	1		11/09/00
X00427	XG.2000.1268-1	95-48-7	2-Methylphenol	ND	ug / L	1	1		11/09/00
X00427	XG.2000.1268-1	88-74-4	2-Nitroaniline	ND	ug / L	1	5		11/09/00
X00427	XG.2000.1268-1	88-75-5	2-Nitrophenol	ND	ug / L	1	5		11/09/00
X00427	XG.2000.1268-1		3+4 Methylphenol	ND	ug / L	1	1		11/09/00
X00427	XG.2000.1268-1	99-09-2	3-Nitroaniline	ND	ug / L	1	5		11/09/00
X00427	XG.2000.1268-1	534-52-1	4,6-Dinitro-2-methylphenol	ND	ug / L	1	10		11/09/00
X00427	XG.2000.1268-1	101-55-3	4-Bromophenyl-phenylether	ND	ug / L	1	1		11/09/00
X00427	XG.2000.1268-1	59-50-7	4-Chloro-3-methylphenol	ND	ug / L	1	5		11/09/00
X00427	XG.2000.1268-1	106-47-8	4-Chloroaniline	ND	ug / L	1	5		11/09/00
X00427	XG.2000.1268-1	7005-72-3	4-Chlorophenyl-phenylether	ND	ug / L	1	1		11/09/00
X00427	XG.2000.1268-1	100-01-6	4-Nitroaniline	ND	ug / L	1	5		11/09/00
X00427	XG.2000.1268-1	100-02-7	4-Nitrophenol	ND	ug / L	1	10		11/09/00
X00427	XG.2000.1268-1	83-32-9	Acenaphthene	ND	ug / L	1	1		11/09/00
X00427	XG.2000.1268-1	208-96-8	Acenaphthylene	ND	ug / L	1	1		11/09/00
X00427	XG.2000.1268-1	62-53-3	Aniline	ND	ug / L	1	10		11/09/00
X00427	XG.2000.1268-1	120-12-7	Anthracene	ND	ug / L	1	1		11/09/00
X00427	XG.2000.1268-1		Azobenzene&1,2-Diphenylhydrazine	ND	ug / L	1	1		11/09/00
[illegible]27	XG.2000.1268-1	56-55-3	Benzo (a) anthracene	ND	ug / L	1	1		11/09/00

Quality Control Summary

Client: CH2MHILL

Project: 0011151 160660.02.FF.SA

Explanation of codes

D	Not applicable due to sample dilut
L	Not applicable due to MDL proxin

X00427	XG.2000.1268-1	50-32-8	Benzo(a)pyrene	ND	ug / L	1	1		11/09/00
X00427	XG.2000.1268-1		Benzo(b & k)fluoranthene	ND	ug / L	1	1		11/09/00
X00427	XG.2000.1268-1	191-24-2	Benzo(g,h,i)perylene	ND	ug / L	1	1		11/09/00
X00427	XG.2000.1268-1	64-85-0	Benzoic acid	ND	ug / L	1	25		11/09/00
X00427	XG.2000.1268-1	100-51-6	Benzyl alcohol	ND	ug / L	1	5		11/09/00
X00427	XG.2000.1268-1	111-44-4	bis (2-Chloroethyl) ether	ND	ug / L	1	1		11/09/00
X00427	XG.2000.1268-1	111-91-1	bis(2-Chloroethoxy)methane	ND	ug / L	1	1		11/09/00
X00427	XG.2000.1268-1	108-60-1	bis(2-Chloroisopropyl)ether	ND	ug / L	1	1		11/09/00
X00427	XG.2000.1268-1	117-81-7	bis(2-Ethylhexyl)phthalate	ND	ug / L	1	5		11/09/00
X00427	XG.2000.1268-1	85-68-7	Butylbenzylphthalate	ND	ug / L	1	1		11/09/00
X00427	XG.2000.1268-1	218-01-9	Chrysene	ND	ug / L	1	1		11/09/00
X00427	XG.2000.1268-1	84-74-2	di-n-Butylphthalate	ND	ug / L	1	1		11/09/00
X00427	XG.2000.1268-1	117-84-0	di-n-Octylpthalate	ND	ug / L	1	1		11/09/00
X00427	XG.2000.1268-1	53-70-3	Dibenz(a,h)anthracene	ND	ug / L	1	1		11/09/00
X00427	XG.2000.1268-1	132-64-9	Dibenzofuran	ND	ug / L	1	1		11/09/00
X00427	XG.2000.1268-1	84-66-2	Diethylphthalate	ND	ug / L	1	1		11/09/00
X00427	XG.2000.1268-1	131-11-3	Dimethylphthalate	ND	ug / L	1	1		11/09/00
X00427	XG.2000.1268-1	206-44-0	Fluoranthene	ND	ug / L	1	1		11/09/00
X00427	XG.2000.1268-1	86737	Fluorene	ND	ug / L	1	1		11/09/00
X00427	XG.2000.1268-1	118-74-1	Hexachlorobenzene	ND	ug / L	1	10		11/09/00
X00427	XG.2000.1268-1	87-68-3	Hexachlorobutadiene	ND	ug / L	1	10		11/09/00
X00427	XG.2000.1268-1	77-47-4	Hexachlorocyclopentadiene	ND	ug / L	1	10		11/09/00
X00427	XG.2000.1268-1	67-72-1	Hexachloroethane	ND	ug / L	1	5		11/09/00
X00427	XG.2000.1268-1	193-39-5	Indeno(1,2,3-cd)pyrene	ND	ug / L	1	1		11/09
X00427	XG.2000.1268-1	78-59-1	Isophorone	ND	ug / L	1	1		11/0
X00427	XG.2000.1268-1	621-64-7	n-Nitroso-di-n-propylamine	ND	ug / L	1	1		11/09/00
X00427	XG.2000.1268-1	62-75-9	n-Nitroso-dimethyl-amine	ND	ug / L	1	10		11/09/00
X00427	XG.2000.1268-1	86-30-6	n-Nitrosodiphenylamine	ND	ug / L	1	1		11/09/00
X00427	XG.2000.1268-1	91-20-3	Naphthalene	ND	ug / L	1	1		11/09/00
X00427	XG.2000.1268-1	98-95-3	Nitrobenzene	ND	ug / L	1	1		11/09/00
X00427	XG.2000.1268-1	87-86-5	Pentachlorophenol	ND	ug / L	1	10		11/09/00
X00427	XG.2000.1268-1	85-01-8	Phenanthrene	ND	ug / L	1	1		11/09/00
X00427	XG.2000.1268-1	108-95-2	Phenol	ND	ug / L	1	10		11/09/00
X00427	XG.2000.1268-1	129-00-0	Pyrene	ND	ug / L	1	1		11/09/00
X00427	XG.2000.1268-1	110-86-1	Pyridine	ND	ug / L	1	10		11/09/00

X00427-024 **SW846 3510B/8270B SVOCs by GC/MS**

X00427	XG.2000.1291-2	120-82-1	1,2,4-Trichlorobenzene	ND	ug / L	1	1		11/17/00
X00427	XG.2000.1291-2	95-50-1	1,2-Dichlorobenzene	ND	ug / L	1	1		11/17/00
X00427	XG.2000.1291-2	541-73-1	1,3-Dichlorobenzene	ND	ug / L	1	1		11/17/00
X00427	XG.2000.1291-2	106-46-7	1,4-Dichlorobenzene	ND	ug / L	1	1		11/17/00
X00427	XG.2000.1291-2	90-12-0	1-Methylnaphthalene	ND	ug / L	1	1		11/17/00
X00427	XG.2000.1291-2	58-90-2	2,3,4,6-Tetrachlorophenol	ND	ug / L	1	5		11/17/00
X00427	XG.2000.1291-2	95-95-4	2,4,5-Trichlorophenol	ND	ug / L	1	5		11/17/00
X00427	XG.2000.1291-2	88-06-2	2,4,6-Trichlorophenol	ND	ug / L	1	5		11/17/00
X00427	XG.2000.1291-2	120-83-2	2,4-Dichlorophenol	ND	ug / L	1	5		11/17/00
X00427	XG.2000.1291-2	105-67-9	2,4-Dimethylphenol	ND	ug / L	1	1		11/17/00
X00427	XG.2000.1291-2	51-28-5	2,4-Dinitrophenol	ND	ug / L	1	10		11/17/00
X00427	XG.2000.1291-2	121-14-2	2,4-Dinitrotoluene	ND	ug / L	1	5		11/17/00
X00427	XG.2000.1291-2	606-20-2	2,6-Dinitrotoluene	ND	ug / L	1	5		11/17/0
X00427	XG.2000.1291-2	91-58-7	2-Chloronaphthalene	ND	ug / L	1	1		11/17

Quality Control Summary

Client: CH2MHILL

P[illegible]t: 0011151 160660.02.FF.SA

Explanation of codes

D	*Not applicable due to sample dilution*
L	*Not applicable due to MDL proximity*

X00427	XG.2000.1291-2	95-57-8	2-Chlorophenol	ND	ug / L	1	1		11/17/00
X00427	XG.2000.1291-2	91-57-6	2-Methylnaphthalene	ND	ug / L	1	1		11/17/00
X00427	XG.2000.1291-2	95-48-7	2-Methylphenol	ND	ug / L	1	1		11/17/00
X00427	XG.2000.1291-2	88-74-4	2-Nitroaniline	ND	ug / L	1	5		11/17/00
X00427	XG.2000.1291-2	88-75-5	2-Nitrophenol	ND	ug / L	1	5		11/17/00
X00427	XG.2000.1291-2		3+4 Methylphenol	ND	ug / L	1	1		11/17/00
X00427	XG.2000.1291-2	99-09-2	3-Nitroaniline	ND	ug / L	1	5		11/17/00
X00427	XG.2000.1291-2	534-52-1	4,6-Dinitro-2-methylphenol	ND	ug / L	1	10		11/17/00
X00427	XG.2000.1291-2	101-55-3	4-Bromophenyl-phenylether	ND	ug / L	1	1		11/17/00
X00427	XG.2000.1291-2	59-50-7	4-Chloro-3-methylphenol	ND	ug / L	1	5		11/17/00
X00427	XG.2000.1291-2	106-47-8	4-Chloroaniline	ND	ug / L	1	5		11/17/00
X00427	XG.2000.1291-2	7005-72-3	4-Chlorophenyl-phenylether	ND	ug / L	1	1		11/17/00
X00427	XG.2000.1291-2	100-01-6	4-Nitroaniline	ND	ug / L	1	5		11/17/00
X00427	XG.2000.1291-2	100-02-7	4-Nitrophenol	ND	ug / L	1	10		11/17/00
X00427	XG.2000.1291-2	83-32-9	Acenaphthene	ND	ug / L	1	1		11/17/00
X00427	XG.2000.1291-2	208-96-8	Acenaphthylene	ND	ug / L	1	1		11/17/00
X00427	XG.2000.1291-2	62-53-3	Aniline	ND	ug / L	1	10		11/17/00
X00427	XG.2000.1291-2	120-12-7	Anthracene	ND	ug / L	1	1		11/17/00
X00427	XG.2000.1291-2		Azobenzene&1,2-Diphenylhydrazine	ND	ug / L	1	1		11/17/00
X00427	XG.2000.1291-2	56-55-3	Benzo (a) anthracene	ND	ug / L	1	1		11/17/00
X00427	XG.2000.1291-2	50-32-8	Benzo(a)pyrene	ND	ug / L	1	1		11/17/00
X00427	XG.2000.1291-2		Benzo(b & k)fluoranthene	ND	ug / L	1	1		11/17/00
X[illegible]	XG.2000.1291-2	191-24-2	Benzo(g,h,i)perylene	ND	ug / L	1	1		11/17/00
[illegible]	XG.2000.1291-2	64-85-0	Benzoic acid	ND	ug / L	1	25		11/17/00
X00427	XG.2000.1291-2	100-51-6	Benzyl alcohol	ND	ug / L	1	5		11/17/00
X00427	XG.2000.1291-2	111-44-4	bis (2-Chloroethyl) ether	ND	ug / L	1	1		11/17/00
X00427	XG.2000.1291-2	111-91-1	bis(2-Chloroethoxy)methane	ND	ug / L	1	1		11/17/00
X00427	XG.2000.1291-2	108-60-1	bis(2-Chloroisopropyl)ether	ND	ug / L	1	1		11/17/00
X00427	XG.2000.1291-2	117-81-7	bis(2-Ethylhexyl)phthalate	140	ug / L	1	5		11/17/00
X00427	XG.2000.1291-2	85-68-7	Butylbenzylphthalate	ND	ug / L	1	1		11/17/00
X00427	XG.2000.1291-2	218-01-9	Chrysene	ND	ug / L	1	1		11/17/00
X00427	XG.2000.1291-2	84-74-2	di-n-Butylphthalate	ND	ug / L	1	1		11/17/00
X00427	XG.2000.1291-2	117-84-0	di-n-Octylpthalate	ND	ug / L	1	1		11/17/00
X00427	XG.2000.1291-2	53-70-3	Dibenz(a,h)anthracene	ND	ug / L	1	1		11/17/00
X00427	XG.2000.1291-2	132-64-9	Dibenzofuran	ND	ug / L	1	1		11/17/00
X00427	XG.2000.1291-2	84-66-2	Diethylphthalate	ND	ug / L	1	1		11/17/00
X00427	XG.2000.1291-2	131-11-3	Dimethylphthalate	ND	ug / L	1	1		11/17/00
X00427	XG.2000.1291-2	206-44-0	Fluoranthene	ND	ug / L	1	1		11/17/00
X00427	XG.2000.1291-2	86737	Fluorene	ND	ug / L	1	1		11/17/00
X00427	XG.2000.1291-2	118-74-1	Hexachlorobenzene	ND	ug / L	1	10		11/17/00
X00427	XG.2000.1291-2	87-68-3	Hexachlorobutadiene	ND	ug / L	1	10		11/17/00
X00427	XG.2000.1291-2	77-47-4	Hexachlorocyclopentadiene	ND	ug / L	1	10		11/17/00
X00427	XG.2000.1291-2	67-72-1	Hexachloroethane	ND	ug / L	1	5		11/17/00
X00427	XG.2000.1291-2	193-39-5	Indeno(1,2,3-cd)pyrene	ND	ug / L	1	1		11/17/00
X00427	XG.2000.1291-2	78-59-1	Isophorone	ND	ug / L	1	1		11/17/00
X00427	XG.2000.1291-2	621-64-7	n-Nitroso-di-n-propylamine	ND	ug / L	1	1		11/17/00
X00427	XG.2000.1291-2	62-75-9	n-Nitroso-dimethyl-amine	ND	ug / L	1	10		11/17/00
X00427	XG.2000.1291-2	86-30-6	n-Nitrosodiphenylamine	ND	ug / L	1	1		11/17/00
[illegible]7	XG.2000.1291-2	91-20-3	Naphthalene	ND	ug / L	1	1		11/17/00
[illegible]27	XG.2000.1291-2	98-95-3	Nitrobenzene	ND	ug / L	1	1		11/17/00

Quality Control Summary

Client: CH2MHILL

Project: 0011151 160660.02.FF.SA

Explanation of codes

D	*Not applicable due to sample dilut*
L	*Not applicable due to MDL proxim*

X00427	XG.2000.1291-2	87-86-5	Pentachlorophenol	ND	ug / L	1	10	11/17/00
X00427	XG.2000.1291-2	85-01-8	Phenanthrene	ND	ug / L	1	1	11/17/00
X00427	XG.2000.1291-2	108-95-2	Phenol	ND	ug / L	1	10	11/17/00
X00427	XG.2000.1291-2	129-00-0	Pyrene	ND	ug / L	1	1	11/17/00
X00427	XG.2000.1291-2	110-86-1	Pyridine	ND	ug / L	1	10	11/17/00
X00427-026		**8270**						
X00427	XG.2000.1307-1		1,4-DICHLOROBENZENE CCC	ND	ug / L	1	1	11/28/00
X00427-026		**SW846 3510B/8270B SVOCs by GC/MS**						
X00427	XG.2000.1307-1	120-82-1	1,2,4-Trichlorobenzene	ND	ug / L	1	1	11/28/00
X00427	XG.2000.1307-1	95-50-1	1,2-Dichlorobenzene	ND	ug / L	1	1	11/28/00
X00427	XG.2000.1307-1	541-73-1	1,3-Dichlorobenzene	ND	ug / L	1	1	11/28/00
X00427	XG.2000.1307-1	90-12-0	1-Methylnaphthalene	ND	ug / L	1	1	11/28/00
X00427	XG.2000.1307-1	58-90-2	2,3,4,6-Tetrachlorophenol	ND	ug / L	1	5	11/28/00
X00427	XG.2000.1307-1	95-95-4	2,4,5-Trichlorophenol	ND	ug / L	1	5	11/28/00
X00427	XG.2000.1307-1	88-06-2	2,4,6-Trichlorophenol	ND	ug / L	1	5	11/28/00
X00427	XG.2000.1307-1	120-83-2	2,4-Dichlorophenol	ND	ug / L	1	5	11/28/00
X00427	XG.2000.1307-1	105-67-9	2,4-Dimethylphenol	ND	ug / L	1	1	11/28/00
X00427	XG.2000.1307-1	51-28-5	2,4-Dinitrophenol	ND	ug / L	1	10	11/28/00
X00427	XG.2000.1307-1	121-14-2	2,4-Dinitrotoluene	ND	ug / L	1	5	11/28/00
X00427	XG.2000.1307-1	606-20-2	2,6-Dinitrotoluene	ND	ug / L	1	5	11/28/00
X00427	XG.2000.1307-1	91-58-7	2-Chloronaphthalene	ND	ug / L	1	1	11/28/00
X00427	XG.2000.1307-1	95-57-8	2-Chlorophenol	ND	ug / L	1	1	11/28/00
X00427	XG.2000.1307-1	91-57-6	2-Methylnaphthalene	ND	ug / L	1	1	11/28
X00427	XG.2000.1307-1	95-48-7	2-Methylphenol	ND	ug / L	1	1	11/28
X00427	XG.2000.1307-1	88-74-4	2-Nitroaniline	ND	ug / L	1	5	11/28/00
X00427	XG.2000.1307-1	88-75-5	2-Nitrophenol	ND	ug / L	1	5	11/28/00
X00427	XG.2000.1307-1		3+4 Methylphenol	ND	ug / L	1	1	11/28/00
X00427	XG.2000.1318-1	91-94-1	3,3-Dichlorobenzidine	ND	ug / L	1	10	11/28/00
X00427	XG.2000.1307-1	99-09-2	3-Nitroaniline	ND	ug / L	1	5	11/28/00
X00427	XG.2000.1307-1	534-52-1	4,6-Dinitro-2-methylphenol	ND	ug / L	1	10	11/28/00
X00427	XG.2000.1307-1	101-55-3	4-Bromophenyl-phenylether	ND	ug / L	1	1	11/28/00
X00427	XG.2000.1307-1	59-50-7	4-Chloro-3-methylphenol	ND	ug / L	1	5	11/28/00
X00427	XG.2000.1307-1	106-47-8	4-Chloroaniline	ND	ug / L	1	5	11/28/00
X00427	XG.2000.1307-1	7005-72-3	4-Chlorophenyl-phenylether	ND	ug / L	1	1	11/28/00
X00427	XG.2000.1307-1	100-01-6	4-Nitroaniline	ND	ug / L	1	5	11/28/00
X00427	XG.2000.1307-1	100-02-7	4-Nitrophenol	ND	ug / L	1	10	11/28/00
X00427	XG.2000.1307-1	83-32-9	Acenaphthene	ND	ug / L	1	1	11/28/00
X00427	XG.2000.1307-1	208-96-8	Acenaphthylene	ND	ug / L	1	1	11/28/00
X00427	XG.2000.1307-1	62-53-3	Aniline	ND	ug / L	1	10	11/28/00
X00427	XG.2000.1307-1	120-12-7	Anthracene	ND	ug / L	1	1	11/28/00
X00427	XG.2000.1307-1		Azobenzene&1,2-Diphenylhydrazine	ND	ug / L	1	1	11/28/00
X00427	XG.2000.1307-1	56-55-3	Benzo (a) anthracene	ND	ug / L	1	1	11/28/00
X00427	XG.2000.1307-1	50-32-8	Benzo(a)pyrene	ND	ug / L	1	1	11/28/00
X00427	XG.2000.1307-1		Benzo(b & k)fluoranthene	ND	ug / L	1	1	11/28/00
X00427	XG.2000.1307-1	191-24-2	Benzo(g,h,i)perylene	ND	ug / L	1	1	11/28/00
X00427	XG.2000.1307-1	64-85-0	Benzoic acid	ND	ug / L	1	25	11/28/00
X00427	XG.2000.1307-1	100-51-6	Benzyl alcohol	ND	ug / L	1	5	11/28/00
X00427	XG.2000.1307-1	111-44-4	bis (2-Chloroethyl) ether	ND	ug / L	1	1	11/28
X00427	XG.2000.1307-1	111-91-1	bis(2-Chloroethoxy)methane	ND	ug / L	1	1	11/28

Quality Control Summary

Explanation of codes

D	*Not applicable due to sample dilution*
L	*Not applicable due to MDL proximity*

Client: CH2MHILL

Project: 0011151 160660.02.FF.SA

X00427	XG.2000.1307-1	108-60-1	bis(2-Chloroisopropyl)ether	ND	ug / L	1	1		11/28/00
X00427	XG.2000.1307-1	117-81-7	bis(2-Ethylhexyl)phthalate	ND	ug / L	1	5		11/28/00
X00427	XG.2000.1307-1	85-68-7	Butylbenzylphthalate	ND	ug / L	1	1		11/28/00
X00427	XG.2000.1307-1	218-01-9	Chrysene	ND	ug / L	1	1		11/28/00
X00427	XG.2000.1307-1	84-74-2	di-n-Butylphthalate	ND	ug / L	1	1		11/28/00
X00427	XG.2000.1307-1	117-84-0	di-n-Octylpthalate	ND	ug / L	1	1		11/28/00
X00427	XG.2000.1307-1	53-70-3	Dibenz(a,h)anthracene	ND	ug / L	1	1		11/28/00
X00427	XG.2000.1307-1	132-64-9	Dibenzofuran	ND	ug / L	1	1		11/28/00
X00427	XG.2000.1307-1	84-66-2	Diethylphthalate	ND	ug / L	1	1		11/28/00
X00427	XG.2000.1307-1	131-11-3	Dimethylphthalate	ND	ug / L	1	1		11/28/00
X00427	XG.2000.1307-1	206-44-0	Fluoranthene	ND	ug / L	1	1		11/28/00
X00427	XG.2000.1307-1	86737	Fluorene	ND	ug / L	1	1		11/28/00
X00427	XG.2000.1307-1	118-74-1	Hexachlorobenzene	ND	ug / L	1	10		11/28/00
X00427	XG.2000.1307-1	87-68-3	Hexachlorobutadiene	ND	ug / L	1	10		11/28/00
X00427	XG.2000.1307-1	77-47-4	Hexachlorocyclopentadiene	ND	ug / L	1	10		11/28/00
X00427	XG.2000.1307-1	67-72-1	Hexachloroethane	ND	ug / L	1	5		11/28/00
X00427	XG.2000.1307-1	193-39-5	Indeno(1,2,3-cd)pyrene	ND	ug / L	1	1		11/28/00
X00427	XG.2000.1307-1	78-59-1	Isophorone	ND	ug / L	1	1		11/28/00
X00427	XG.2000.1307-1	621-64-7	n-Nitroso-di-n-propylamine	ND	ug / L	1	1		11/28/00
X00427	XG.2000.1307-1	62-75-9	n-Nitroso-dimethyl-amine	ND	ug / L	1	10		11/28/00
X00427	XG.2000.1307-1	86-30-6	n-Nitrosodiphenylamine	ND	ug / L	1	1		11/28/00
X00427	XG.2000.1307-1	91-20-3	Naphthalene	ND	ug / L	1	1		11/28/00
X00427	XG.2000.1307-1	98-95-3	Nitrobenzene	ND	ug / L	1	1		11/28/00
[illegible]7	XG.2000.1307-1	87-86-5	Pentachlorophenol	ND	ug / L	1	10		11/28/00
[illegible]427	XG.2000.1307-1	85-01-8	Phenanthrene	ND	ug / L	1	1		11/28/00
X00427	XG.2000.1307-1	108-95-2	Phenol	ND	ug / L	1	10		11/28/00
X00427	XG.2000.1307-1	129-00-0	Pyrene	ND	ug / L	1	1		11/28/00
X00427	XG.2000.1307-1	110-86-1	Pyridine	ND	ug / L	1	10		11/28/00

X00436-001 **SW846 8260A Purgeable VOCs by GC/MS**

X00436	XG.2000.1263-1	75-34-3	1,1 Dichloroethane	ND	ug / L	1	1		11/13/00
X00436	XG.2000.1263-1	75-34-3	1,1 Dichloroethene	ND	ug / L	1	1		11/13/00
X00436	XG.2000.1263-1	71-55-6	1,1,1 Trichloroethane	ND	ug / L	1	1		11/13/00
X00436	XG.2000.1263-1	630-20-6	1,1,1,2 Tetrachloroethane	ND	ug / L	1	1		11/13/00
X00436	XG.2000.1263-1	79-00-5	1,1,2 Trichloroethane	ND	ug / L	1	1		11/13/00
X00436	XG.2000.1263-1	79-34-5	1,1,2,2 Tetrachloroethane	ND	ug / L	1	1		11/13/00
X00436	XG.2000.1263-1	106-93-4	1,2 Dibromoethane (EDB)	ND	ug / L	1	1		11/13/00
X00436	XG.2000.1263-1	95-50-1	1,2 Dichlorobenzene	ND	ug / L	1	1		11/13/00
X00436	XG.2000.1263-1	107-06-2	1,2 Dichloroethane	ND	ug / L	1	1		11/13/00
X00436	XG.2000.1263-1	78-87-5	1,2 Dichloropropane	ND	ug / L	1	1		11/13/00
X00436	XG.2000.1263-1	96-18-4	1,2,3 Trichloropropane	ND	ug / L	1	1		11/13/00
X00436	XG.2000.1263-1	95-63-6	1,2,4-Trimethylbenzene	ND	ug / L	1	1		11/13/00
X00436	XG.2000.1263-1	541-73-1	1,3 Dichlorobenzene	ND	ug / L	1	1		11/13/00
X00436	XG.2000.1263-1	108-67-8	1,3,5-Trimethylbenzene	ND	ug / L	1	1		11/13/00
X00436	XG.2000.1263-1	764-41-0	1,4 Dichloro-2-butene	ND	ug / L	1	10		11/13/00
X00436	XG.2000.1263-1	106-46-7	1,4 Dichlorobenzene	ND	ug / L	1	1		11/13/00
X00436	XG.2000.1263-1	78-93-3	2-Butanone (MEK)	ND	ug / L	1	5		11/13/00
X00436	XG.2000.1263-1	110-75-8	2-Chloroethylvinylether	ND	ug / L	1	5		11/13/00
X00436	XG.2000.1263-1	591-78-6	2-Hexanone (MBK)	ND	ug / L	1	5		11/13/00
[illegible]36	XG.2000.1263-1	108-10-1	4-Methyl-2-pentanone (MIBK)	ND	ug / L	1	5		11/13/00
[illegible]436	XG.2000.1263-1	67-64-1	Acetone	ND	ug / L	1	10		11/13/00

Quality Control Summary

Client: CH2MHILL

Project: 0011151 160660.02.FF.SA

Explanation of codes

D Not applicable due to sample dilu

L Not applicable due to MDL proxim

X00436	XG.2000.1263-1	107-02-8	Acrolein	ND	ug / L	1	20	11/13/00
X00436	XG.2000.1263-1	107-13-1	Acrylonitrile	ND	ug / L	1	20	11/13/00
X00436	XG.2000.1263-1	71-43-2	Benzene	ND	ug / L	1	1	11/13/00
X00436	XG.2000.1263-1	75-27-4	Bromodichloromethane	ND	ug / L	1	1	11/13/00
X00436	XG.2000.1263-1	75-25-2	Bromoform	ND	ug / L	1	1	11/13/00
X00436	XG.2000.1263-1	74-83-9	Bromomethane	ND	ug / L	1	5	11/13/00
X00436	XG.2000.1263-1	75-15-0	Carbon disulfide	ND	ug / L	1	5	11/13/00
X00436	XG.2000.1263-1	56-23-5	Carbon tetrachloride	ND	ug / L	1	1	11/13/00
X00436	XG.2000.1263-1	108-90-7	Chlorobenzene	ND	ug / L	1	1	11/13/00
X00436	XG.2000.1263-1	124-48-1	Chlorodibromomethane	ND	ug / L	1	1	11/13/00
X00436	XG.2000.1263-1	75-00-3	Chloroethane	ND	ug / L	1	5	11/13/00
X00436	XG.2000.1263-1	67-66-3	Chloroform	ND	ug / L	1	1	11/13/00
X00436	XG.2000.1263-1	74-87-3	Chloromethane	ND	ug / L	1	5	11/13/00
X00436	XG.2000.1263-1	156-59-2	cis-1,2 dichloroethene	ND	ug / L	1	1	11/13/00
X00436	XG.2000.1263-1	10061-01-5	cis-1,3 dichloropropene	ND	ug / L	1	1	11/13/00
X00436	XG.2000.1263-1	74-95-3	Dibromomethane	ND	ug / L	1	1	11/13/00
X00436	XG.2000.1263-1	97-63-2	Ethyl methacrylate	ND	ug / L	1	5	11/13/00
X00436	XG.2000.1263-1	100-41-4	Ethylbenzene	ND	ug / L	1	1	11/13/00
X00436	XG.2000.1263-1		Freon 113	ND	ug / L	1	5	11/13/00
X00436	XG.2000.1263-1	75-71-8	Freon 12	ND	ug / L	1	10	11/13/00
X00436	XG.2000.1263-1	74-88-4	Iodomethane	ND	ug / L	1	5	11/13/00
X00436	XG.2000.1263-1	1634-04-4	Methyl t-butyl ether (MTBE)	ND	ug / L	1	1	11/13/00
X00436	XG.2000.1263-1	75-09-2	Methylene chloride	ND	ug / L	1	10	11/13/00
X00436	XG.2000.1263-1	91-20-3	Naphthalene	ND	ug / L	1	5	11/13
X00436	XG.2000.1263-1	95-47-6	o-Xylene	ND	ug / L	1	1	11/13
X00436	XG.2000.1263-1	108-38-3/106-42	p/m Xylenes	ND	ug / L	1	2	11/13/00
X00436	XG.2000.1263-1	100-42-5	Styrene	ND	ug / L	1	1	11/13/00
X00436	XG.2000.1263-1	156-60-5	t-1,2 Dichloroethene	ND	ug / L	1	1	11/13/00
X00436	XG.2000.1263-1	10061-02-6	t-1,3 Dichloropropene	ND	ug / L	1	1	11/13/00
X00436	XG.2000.1263-1	127-18-4	Tetrachloroethene	ND	ug / L	1	1	11/13/00
X00436	XG.2000.1263-1	108-88-3	Toluene	ND	ug / L	1	1	11/13/00
X00436	XG.2000.1263-1	79-01-6	Trichloroethene	ND	ug / L	1	1	11/13/00
X00436	XG.2000.1263-1	75-69-4	Trichlorofluoromethane	ND	ug / L	1	5	11/13/00
X00436	XG.2000.1263-1	108-05-4	Vinyl acetate	ND	ug / L	1	5	11/13/00
X00436	XG.2000.1263-1	75-01-4	Vinyl chloride	ND	ug / L	1	5	11/13/00
X00436-015		**SW846 8260A Purgeable VOCs by GC/MS**						
X00436	XG.2000.1274-1	75-34-3	1,1 Dichloroethane	ND	ug / L	1	1	11/14/00
X00436	XG.2000.1274-1	75-34-3	1,1 Dichloroethene	ND	ug / L	1	1	11/14/00
X00436	XG.2000.1274-1	71-55-6	1,1,1 Trichloroethane	ND	ug / L	1	1	11/14/00
X00436	XG.2000.1274-1	630-20-6	1,1,1,2 Tetrachloroethane	ND	ug / L	1	1	11/14/00
X00436	XG.2000.1274-1	79-00-5	1,1,2 Trichloroethane	ND	ug / L	1	1	11/14/00
X00436	XG.2000.1274-1	79-34-5	1,1,2,2 Tetrachloroethane	ND	ug / L	1	1	11/14/00
X00436	XG.2000.1274-1	106-93-4	1,2 Dibromoethane (EDB)	ND	ug / L	1	1	11/14/00
X00436	XG.2000.1274-1	95-50-1	1,2 Dichlorobenzene	ND	ug / L	1	1	11/14/00
X00436	XG.2000.1274-1	107-06-2	1,2 Dichloroethane	ND	ug / L	1	1	11/14/00
X00436	XG.2000.1274-1	78-87-5	1,2 Dichloropropane	ND	ug / L	1	1	11/14/00
X00436	XG.2000.1274-1	96-18-4	1,2,3 Trichloropropane	ND	ug / L	1	1	11/14/00
X00436	XG.2000.1274-1	95-63-6	1,2,4-Trimethylbenzene	ND	ug / L	1	1	11/14/00
X00436	XG.2000.1274-1	541-73-1	1,3 Dichlorobenzene	ND	ug / L	1	1	11/1

Quality Control Summary

Explanation of codes

D	*Not applicable due to sample dilution*
L	*Not applicable due to MDL proximity*

Client: **CH2MHILL**

Project: **0011151** **160660.02.FF.SA**

X00436	XG.2000.1274-1	108-67-8	1,3,5-Trimethylbenzene	ND	ug / L	1	1		11/14/00
X00436	XG.2000.1274-1	764-41-0	1,4 Dichloro-2-butene	ND	ug / L	1	10		11/14/00
X00436	XG.2000.1274-1	106-46-7	1,4 Dichlorobenzene	ND	ug / L	1	1		11/14/00
X00436	XG.2000.1274-1	78-93-3	2-Butanone (MEK)	ND	ug / L	1	5		11/14/00
X00436	XG.2000.1274-1	110-75-8	2-Chloroethylvinylether	ND	ug / L	1	5		11/14/00
X00436	XG.2000.1274-1	591-78-6	2-Hexanone (MBK)	ND	ug / L	1	5		11/14/00
X00436	XG.2000.1274-1	108-10-1	4-Methyl-2-pentanone (MIBK)	ND	ug / L	1	5		11/14/00
X00436	XG.2000.1274-1	67-64-1	Acetone	ND	ug / L	1	10		11/14/00
X00436	XG.2000.1274-1	107-02-8	Acrolein	ND	ug / L	1	20		11/14/00
X00436	XG.2000.1274-1	107-13-1	Acrylonitrile	ND	ug / L	1	20		11/14/00
X00436	XG.2000.1274-1	71-43-2	Benzene	ND	ug / L	1	1		11/14/00
X00436	XG.2000.1274-1	75-27-4	Bromodichloromethane	ND	ug / L	1	1		11/14/00
X00436	XG.2000.1274-1	75-25-2	Bromoform	ND	ug / L	1	1		11/14/00
X00436	XG.2000.1274-1	74-83-9	Bromomethane	ND	ug / L	1	5		11/14/00
X00436	XG.2000.1274-1	75-15-0	Carbon disulfide	ND	ug / L	1	5		11/14/00
X00436	XG.2000.1274-1	56-23-5	Carbon tetrachloride	ND	ug / L	1	1		11/14/00
X00436	XG.2000.1274-1	108-90-7	Chlorobenzene	ND	ug / L	1	1		11/14/00
X00436	XG.2000.1274-1	124-48-1	Chlorodibromomethane	ND	ug / L	1	1		11/14/00
X00436	XG.2000.1274-1	75-00-3	Chloroethane	ND	ug / L	1	5		11/14/00
X00436	XG.2000.1274-1	67-66-3	Chloroform	ND	ug / L	1	1		11/14/00
X00436	XG.2000.1274-1	74-87-3	Chloromethane	ND	ug / L	1	5		11/14/00
X00436	XG.2000.1274-1	156-59-2	cis-1,2 dichloroethene	ND	ug / L	1	1		11/14/00
X00436	XG.2000.1274-1	10061-01-5	cis-1,3 dichloropropene	ND	ug / L	1	1		11/14/00
[illegible]6	XG.2000.1274-1	74-95-3	Dibromomethane	ND	ug / L	1	1		11/14/00
[illegible]6	XG.2000.1274-1	97-63-2	Ethyl methacrylate	ND	ug / L	1	5		11/14/00
X00436	XG.2000.1274-1	100-41-4	Ethylbenzene	ND	ug / L	1	1		11/14/00
X00436	XG.2000.1274-1		Freon 113	ND	ug / L	1	5		11/14/00
X00436	XG.2000.1274-1	75-71-8	Freon 12	ND	ug / L	1	10		11/14/00
X00436	XG.2000.1274-1	74-88-4	Iodomethane	ND	ug / L	1	5		11/14/00
X00436	XG.2000.1274-1	1634-04-4	Methyl t-butyl ether (MTBE)	ND	ug / L	1	1		11/14/00
X00436	XG.2000.1274-1	75-09-2	Methylene chloride	ND	ug / L	1	10		11/14/00
X00436	XG.2000.1274-1	91-20-3	Naphthalene	ND	ug / L	1	5		11/14/00
X00436	XG.2000.1274-1	95-47-6	o-Xylene	ND	ug / L	1	1		11/14/00
X00436	XG.2000.1274-1	108-38-3/106-42	p/m Xylenes	ND	ug / L	1	2		11/14/00
X00436	XG.2000.1274-1	100-42-5	Styrene	ND	ug / L	1	1		11/14/00
X00436	XG.2000.1274-1	156-60-5	t-1,2 Dichloroethene	ND	ug / L	1	1		11/14/00
X00436	XG.2000.1274-1	10061-02-6	t-1,3 Dichloropropene	ND	ug / L	1	1		11/14/00
X00436	XG.2000.1274-1	127-18-4	Tetrachloroethene	ND	ug / L	1	1		11/14/00
X00436	XG.2000.1274-1	108-88-3	Toluene	ND	ug / L	1	1		11/14/00
X00436	XG.2000.1274-1	79-01-6	Trichloroethene	ND	ug / L	1	1		11/14/00
X00436	XG.2000.1274-1	75-69-4	Trichlorofluoromethane	ND	ug / L	1	5		11/14/00
X00436	XG.2000.1274-1	108-05-4	Vinyl acetate	ND	ug / L	1	5		11/14/00
X00436	XG.2000.1274-1	75-01-4	Vinyl chloride	ND	ug / L	1	5		11/14/00

X00436-018 SW846 8260A Purgeable VOCs by GC/MS

X00436	XG.2000.1274-4	75-34-3	1,1 Dichloroethane	ND	ug / L	1	1		11/15/00
X00436	XG.2000.1274-4	75-34-3	1,1 Dichloroethene	ND	ug / L	1	1		11/15/00
X00436	XG.2000.1274-4	71-55-6	1,1,1 Trichloroethane	ND	ug / L	1	1		11/15/00
X00436	XG.2000.1274-4	630-20-6	1,1,1,2 Tetrachloroethane	ND	ug / L	1	1		11/15/00
[illegible]6	XG.2000.1274-4	79-00-5	1,1,2 Trichloroethane	ND	ug / L	1	1		11/15/00

Quality Control Summary

Client: CH2MHILL

Project: 0011151 160660.02.FF.SA

Explanation of codes

D	Not applicable due to sample dilu
L	Not applicable due to MDL proxim

X00436	XG.2000.1274-4	79-34-5	1,1,2,2 Tetrachloroethane	ND	ug / L	1	1	11/15/00
X00436	XG.2000.1274-4	106-93-4	1,2 Dibromoethane (EDB)	ND	ug / L	1	1	11/15/00
X00436	XG.2000.1274-4	95-50-1	1,2 Dichlorobenzene	ND	ug / L	1	1	11/15/00
X00436	XG.2000.1274-4	107-06-2	1,2 Dichloroethane	ND	ug / L	1	1	11/15/00
X00436	XG.2000.1274-4	78-87-5	1,2 Dichloropropane	ND	ug / L	1	1	11/15/00
X00436	XG.2000.1274-4	96-18-4	1,2,3 Trichloropropane	ND	ug / L	1	1	11/15/00
X00436	XG.2000.1274-4	95-63-6	1,2,4-Trimethylbenzene	ND	ug / L	1	1	11/15/00
X00436	XG.2000.1274-4	541-73-1	1,3 Dichlorobenzene	ND	ug / L	1	1	11/15/00
X00436	XG.2000.1274-4	108-67-8	1,3,5-Trimethylbenzene	ND	ug / L	1	1	11/15/00
X00436	XG.2000.1274-4	764-41-0	1,4 Dichloro-2-butene	ND	ug / L	1	10	11/15/00
X00436	XG.2000.1274-4	106-46-7	1,4 Dichlorobenzene	ND	ug / L	1	1	11/15/00
X00436	XG.2000.1274-4	78-93-3	2-Butanone (MEK)	ND	ug / L	1	5	11/15/00
X00436	XG.2000.1274-4	110-75-8	2-Chloroethylvinylether	ND	ug / L	1	5	11/15/00
X00436	XG.2000.1274-4	591-78-6	2-Hexanone (MBK)	ND	ug / L	1	5	11/15/00
X00436	XG.2000.1274-4	108-10-1	4-Methyl-2-pentanone (MIBK)	ND	ug / L	1	5	11/15/00
X00436	XG.2000.1274-4	67-64-1	Acetone	ND	ug / L	1	10	11/15/00
X00436	XG.2000.1274-4	107-02-8	Acrolein	ND	ug / L	1	20	11/15/00
X00436	XG.2000.1274-4	107-13-1	Acrylonitrile	ND	ug / L	1	20	11/15/00
X00436	XG.2000.1274-4	71-43-2	Benzene	ND	ug / L	1	1	11/15/00
X00436	XG.2000.1274-4	75-27-4	Bromodichloromethane	ND	ug / L	1	1	11/15/00
X00436	XG.2000.1274-4	75-25-2	Bromoform	ND	ug / L	1	1	11/15/00
X00436	XG.2000.1274-4	74-83-9	Bromomethane	ND	ug / L	1	5	11/15/00
X00436	XG.2000.1274-4	75-15-0	Carbon disulfide	ND	ug / L	1	5	11/15/00
X00436	XG.2000.1274-4	56-23-5	Carbon tetrachloride	ND	ug / L	1	1	11/15
X00436	XG.2000.1274-4	108-90-7	Chlorobenzene	ND	ug / L	1	1	11/15
X00436	XG.2000.1274-4	124-48-1	Chlorodibromomethane	ND	ug / L	1	1	11/15/00
X00436	XG.2000.1274-4	75-00-3	Chloroethane	ND	ug / L	1	5	11/15/00
X00436	XG.2000.1274-4	67-66-3	Chloroform	ND	ug / L	1	1	11/15/00
X00436	XG.2000.1274-4	74-87-3	Chloromethane	ND	ug / L	1	5	11/15/00
X00436	XG.2000.1274-4	156-59-2	cis-1,2 dichloroethene	ND	ug / L	1	1	11/15/00
X00436	XG.2000.1274-4	10061-01-5	cis-1,3 dichloropropene	ND	ug / L	1	1	11/15/00
X00436	XG.2000.1274-4	74-95-3	Dibromomethane	ND	ug / L	1	1	11/15/00
X00436	XG.2000.1274-4	97-63-2	Ethyl methacrylate	ND	ug / L	1	5	11/15/00
X00436	XG.2000.1274-4	100-41-4	Ethylbenzene	ND	ug / L	1	1	11/15/00
X00436	XG.2000.1274-4		Freon 113	ND	ug / L	1	5	11/15/00
X00436	XG.2000.1274-4	75-71-8	Freon 12	ND	ug / L	1	10	11/15/00
X00436	XG.2000.1274-4	74-88-4	Iodomethane	ND	ug / L	1	5	11/15/00
X00436	XG.2000.1274-4	1634-04-4	Methyl t-butyl ether (MTBE)	ND	ug / L	1	1	11/15/00
X00436	XG.2000.1274-4	75-09-2	Methylene chloride	ND	ug / L	1	10	11/15/00
X00436	XG.2000.1274-4	91-20-3	Naphthalene	ND	ug / L	1	5	11/15/00
X00436	XG.2000.1274-4	95-47-6	o-Xylene	ND	ug / L	1	1	11/15/00
X00436	XG.2000.1274-4	108-38-3/106-42	p/m Xylenes	ND	ug / L	1	2	11/15/00
X00436	XG.2000.1274-4	100-42-5	Styrene	ND	ug / L	1	1	11/15/00
X00436	XG.2000.1274-4	156-60-5	t-1,2 Dichloroethene	ND	ug / L	1	1	11/15/00
X00436	XG.2000.1274-4	10061-02-6	t-1,3 Dichloropropene	ND	ug / L	1	1	11/15/00
X00436	XG.2000.1274-4	127-18-4	Tetrachloroethene	ND	ug / L	1	1	11/15/00
X00436	XG.2000.1274-4	108-88-3	Toluene	ND	ug / L	1	1	11/15/00
X00436	XG.2000.1274-4	79-01-6	Trichloroethene	ND	ug / L	1	1	11/15/00
X00436	XG.2000.1274-4	75-69-4	Trichlorofluoromethane	ND	ug / L	1	5	11/15
X00436	XG.2000.1274-4	108-05-4	Vinyl acetate	ND	ug / L	1	5	11/15

Quality Control Summary

Explanation of codes

D *Not applicable due to sample dilution*
L *Not applicable due to MDL proximity*

Client: **CH2MHILL**
Project: **0011151** **160660.02.FF.SA**

X00436	XG.2000.1274-4	75-01-4	Vinyl chloride	ND	ug / L	1	5		11/15/00
X00436-029		**SW846 8260A Purgeable VOCs by GC/MS**							
X00436	XG.2000.1298-1	75-34-3	1,1 Dichloroethane	ND	ug / L	1	1		11/17/00
X00436	XG.2000.1298-1	75-34-3	1,1 Dichloroethene	ND	ug / L	1	1		11/17/00
X00436	XG.2000.1298-1	71-55-6	1,1,1 Trichloroethane	ND	ug / L	1	1		11/17/00
X00436	XG.2000.1298-1	630-20-6	1,1,1,2 Tetrachloroethane	ND	ug / L	1	1		11/17/00
X00436	XG.2000.1298-1	79-00-5	1,1,2 Trichloroethane	ND	ug / L	1	1		11/17/00
X00436	XG.2000.1298-1	79-34-5	1,1,2,2 Tetrachloroethane	ND	ug / L	1	1		11/17/00
X00436	XG.2000.1298-1	106-93-4	1,2 Dibromoethane (EDB)	ND	ug / L	1	1		11/17/00
X00436	XG.2000.1298-1	95-50-1	1,2 Dichlorobenzene	ND	ug / L	1	1		11/17/00
X00436	XG.2000.1298-1	107-06-2	1,2 Dichloroethane	ND	ug / L	1	1		11/17/00
X00436	XG.2000.1298-1	78-87-5	1,2 Dichloropropane	ND	ug / L	1	1		11/17/00
X00436	XG.2000.1298-1	96-18-4	1,2,3 Trichloropropane	ND	ug / L	1	1		11/17/00
X00436	XG.2000.1298-1	95-63-6	1,2,4-Trimethylbenzene	ND	ug / L	1	1		11/17/00
X00436	XG.2000.1298-1	541-73-1	1,3 Dichlorobenzene	ND	ug / L	1	1		11/17/00
X00436	XG.2000.1298-1	108-67-8	1,3,5-Trimethylbenzene	ND	ug / L	1	1		11/17/00
X00436	XG.2000.1298-1	764-41-0	1,4 Dichloro-2-butene	ND	ug / L	1	10		11/17/00
X00436	XG.2000.1298-1	106-46-7	1,4 Dichlorobenzene	ND	ug / L	1	1		11/17/00
X00436	XG.2000.1298-1	78-93-3	2-Butanone (MEK)	ND	ug / L	1	5		11/17/00
X00436	XG.2000.1298-1	110-75-8	2-Chloroethylvinylether	ND	ug / L	1	5		11/17/00
X00436	XG.2000.1298-1	591-78-6	2-Hexanone (MBK)	ND	ug / L	1	5		11/17/00
X00436	XG.2000.1298-1	108-10-1	4-Methyl-2-pentanone (MIBK)	ND	ug / L	1	5		11/17/00
X00436	XG.2000.1298-1	67-64-1	Acetone	ND	ug / L	1	10		11/17/00
[illegible]	XG.2000.1298-1	107-02-8	Acrolein	ND	ug / L	1	20		11/17/00
X00436	XG.2000.1298-1	107-13-1	Acrylonitrile	ND	ug / L	1	20		11/17/00
X00436	XG.2000.1298-1	71-43-2	Benzene	ND	ug / L	1	1		11/17/00
X00436	XG.2000.1298-1	75-27-4	Bromodichloromethane	ND	ug / L	1	1		11/17/00
X00436	XG.2000.1298-1	75-25-2	Bromoform	ND	ug / L	1.	1		11/17/00
X00436	XG.2000.1298-1	74-83-9	Bromomethane	ND	ug / L	1	5		11/17/00
X00436	XG.2000.1298-1	75-15-0	Carbon disulfide	ND	ug / L	1	5		11/17/00
X00436	XG.2000.1298-1	56-23-5	Carbon tetrachloride	ND	ug / L	1	1		11/17/00
X00436	XG.2000.1298-1	108-90-7	Chlorobenzene	ND	ug / L	1	1		11/17/00
X00436	XG.2000.1298-1	124-48-1	Chlorodibromomethane	ND	ug / L	1	1		11/17/00
X00436	XG.2000.1298-1	75-00-3	Chloroethane	ND	ug / L	1	5		11/17/00
X00436	XG.2000.1298-1	67-66-3	Chloroform	ND	ug / L	1	1		11/17/00
X00436	XG.2000.1298-1	74-87-3	Chloromethane	ND	ug / L	1	5		11/17/00
X00436	XG.2000.1298-1	156-59-2	cis-1,2 dichloroethene	ND	ug / L	1	1		11/17/00
X00436	XG.2000.1298-1	10061-01-5	cis-1,3 dichloropropene	ND	ug / L	1	1		11/17/00
X00436	XG.2000.1298-1	74-95-3	Dibromomethane	ND	ug / L	1	1		11/17/00
X00436	XG.2000.1298-1	97-63-2	Ethyl methacrylate	ND	ug / L	1	5		11/17/00
X00436	XG.2000.1298-1	100-41-4	Ethylbenzene	ND	ug / L	1	1		11/17/00
X00436	XG.2000.1298-1		Freon 113	ND	ug / L	1	5		11/17/00
X00436	XG.2000.1298-1	75-71-8	Freon 12	ND	ug / L	1	10		11/17/00
X00436	XG.2000.1298-1	74-88-4	Iodomethane	ND	ug / L	1	5		11/17/00
X00436	XG.2000.1298-1	1634-04-4	Methyl t-butyl ether (MTBE)	ND	ug / L	1	1		11/17/00
X00436	XG.2000.1298-1	75-09-2	Methylene chloride	ND	ug / L	1	10		11/17/00
X00436	XG.2000.1298-1	91-20-3	Naphthalene	ND	ug / L	1	5		11/17/00
X00436	XG.2000.1298-1	95-47-6	o-Xylene	ND	ug / L	1	1		11/17/00
[illegible]	XG.2000.1298-1	108-38-3/106-42	p/m Xylenes	ND	ug / L	1	2		11/17/00

Quality Control Summary

Client: **CH2MHILL**

Project: **0011151** **160660.02.FF.SA**

Explanation of codes

D *Not applicable due to sample dil*

L *Not applicable due to MDL proxi*

X00436	XG.2000.1298-1	100-42-5	Styrene	ND	ug / L	1	1		11/17/00
X00436	XG.2000.1298-1	156-60-5	t-1,2 Dichloroethene	ND	ug / L	1	1		11/17/00
X00436	XG.2000.1298-1	10061-02-6	t-1,3 Dichloropropene	ND	ug / L	1	1		11/17/00
X00436	XG.2000.1298-1	127-18-4	Tetrachloroethene	ND	ug / L	1	1		11/17/00
X00436	XG.2000.1298-1	108-88-3	Toluene	ND	ug / L	1	1		11/17/00
X00436	XG.2000.1298-1	79-01-6	Trichloroethene	ND	ug / L	1	1		11/17/00
X00436	XG.2000.1298-1	75-69-4	Trichlorofluoromethane	ND	ug / L	1	5		11/17/00
X00436	XG.2000.1298-1	108-05-4	Vinyl acetate	ND	ug / L	1	5		11/17/00
X00436	XG.2000.1298-1	75-01-4	Vinyl chloride	ND	ug / L	1	5		11/17/00
X00436-032		**SW846 8260A Purgeable VOCs by GC/MS**							
X00436	XG.2000.1298-3	75-34-3	1,1 Dichloroethane	ND	ug / L	1	1		11/20/00
X00436	XG.2000.1298-3	75-34-3	1,1 Dichloroethene	ND	ug / L	1	1		11/20/00
X00436	XG.2000.1298-3	71-55-6	1,1,1 Trichloroethane	ND	ug / L	1	1		11/20/00
X00436	XG.2000.1298-3	630-20-6	1,1,1,2 Tetrachloroethane	ND	ug / L	1	1		11/20/00
X00436	XG.2000.1298-3	79-00-5	1,1,2 Trichloroethane	ND	ug / L	1	1		11/20/00
X00436	XG.2000.1298-3	79-34-5	1,1,2,2 Tetrachloroethane	ND	ug / L	1	1		11/20/00
X00436	XG.2000.1298-3	106-93-4	1,2 Dibromoethane (EDB)	ND	ug / L	1	1		11/20/00
X00436	XG.2000.1298-3	95-50-1	1,2 Dichlorobenzene	ND	ug / L	1	1		11/20/00
X00436	XG.2000.1298-3	107-06-2	1,2 Dichloroethane	ND	ug / L	1	1		11/20/00
X00436	XG.2000.1298-3	78-87-5	1,2 Dichloropropane	ND	ug / L	1	1		11/20/00
X00436	XG.2000.1298-3	96-18-4	1,2,3 Trichloropropane	ND	ug / L	1	1		11/20/00
X00436	XG.2000.1298-3	95-63-6	1,2,4-Trimethylbenzene	ND	ug / L	1	1		11/20/00
X00436	XG.2000.1298-3	541-73-1	1,3 Dichlorobenzene	ND	ug / L	1	1		11/20/
X00436	XG.2000.1298-3	108-67-8	1,3,5-Trimethylbenzene	ND	ug / L	1	1		11/2
X00436	XG.2000.1298-3	764-41-0	1,4 Dichloro-2-butene	ND	ug / L	1	10		11/20/00
X00436	XG.2000.1298-3	106-46-7	1,4 Dichlorobenzene	ND	ug / L	1	1		11/20/00
X00436	XG.2000.1298-3	78-93-3	2-Butanone (MEK)	ND	ug / L	1	5		11/20/00
X00436	XG.2000.1298-3	110-75-8	2-Chloroethylvinylether	ND	ug / L	1	5		11/20/00
X00436	XG.2000.1298-3	591-78-6	2-Hexanone (MBK)	ND	ug / L	1	5		11/20/00
X00436	XG.2000.1298-3	108-10-1	4-Methyl-2-pentanone (MIBK)	ND	ug / L	1	5		11/20/00
X00436	XG.2000.1298-3	67-64-1	Acetone	ND	ug / L	1	10		11/20/00
X00436	XG.2000.1298-3	107-02-8	Acrolein	ND	ug / L	1	20		11/20/00
X00436	XG.2000.1298-3	107-13-1	Acrylonitrile	ND	ug / L	1	20		11/20/00
X00436	XG.2000.1298-3	71-43-2	Benzene	ND	ug / L	1	1		11/20/00
X00436	XG.2000.1298-3	75-27-4	Bromodichloromethane	ND	ug / L	1	1		11/20/00
X00436	XG.2000.1298-3	75-25-2	Bromoform	ND	ug / L	1	1		11/20/00
X00436	XG.2000.1298-3	74-83-9	Bromomethane	ND	ug / L	1	5		11/20/00
X00436	XG.2000.1298-3	75-15-0	Carbon disulfide	ND	ug / L	1	5		11/20/00
X00436	XG.2000.1298-3	56-23-5	Carbon tetrachloride	ND	ug / L	1	1		11/20/00
X00436	XG.2000.1298-3	108-90-7	Chlorobenzene	ND	ug / L	1	1		11/20/00
X00436	XG.2000.1298-3	124-48-1	Chlorodibromomethane	ND	ug / L	1	1		11/20/00
X00436	XG.2000.1298-3	75-00-3	Chloroethane	ND	ug / L	1	5		11/20/00
X00436	XG.2000.1298-3	67-66-3	Chloroform	ND	ug / L	1	1		11/20/00
X00436	XG.2000.1298-3	74-87-3	Chloromethane	ND	ug / L	1	5		11/20/00
X00436	XG.2000.1298-3	156-59-2	cis-1,2 dichloroethene	ND	ug / L	1	1		11/20/00
X00436	XG.2000.1298-3	10061-01-5	cis-1,3 dichloropropene	ND	ug / L	1	1		11/20/00
X00436	XG.2000.1298-3	74-95-3	Dibromomethane	ND	ug / L	1	1		11/20/00
X00436	XG.2000.1298-3	97-63-2	Ethyl methacrylate	ND	ug / L	1	5		11/20/00
X00436	XG.2000.1298-3	100-41-4	Ethylbenzene	ND	ug / L	1	1		11/20
X00436	XG.2000.1298-3		Freon 113	ND	ug / L	1	5		11/20

Quality Control Summary

Client: CH2MHILL

Project: 0011151 160660.02.FF.SA

Explanation of codes

D	*Not applicable due to sample dilution*
L	*Not applicable due to MDL proximity*

X00436	XG.2000.1298-3	75-71-8	Freon 12	ND	ug / L	1	10		11/20/00
X00436	XG.2000.1298-3	74-88-4	Iodomethane	ND	ug / L	1	5		11/20/00
X00436	XG.2000.1298-3	1634-04-4	Methyl t-butyl ether (MTBE)	ND	ug / L	1	1		11/20/00
X00436	XG.2000.1298-3	75-09-2	Methylene chloride	ND	ug / L	1	10		11/20/00
X00436	XG.2000.1298-3	91-20-3	Naphthalene	ND	ug / L	1	5		11/20/00
X00436	XG.2000.1298-3	95-47-6	o-Xylene	ND	ug / L	1	1		11/20/00
X00436	XG.2000.1298-3	108-38-3/106-42	p/m Xylenes	ND	ug / L	1	2		11/20/00
X00436	XG.2000.1298-3	100-42-5	Styrene	ND	ug / L	1	1		11/20/00
X00436	XG.2000.1298-3	156-60-5	t-1,2 Dichloroethene	ND	ug / L	1	1		11/20/00
X00436	XG.2000.1298-3	10061-02-6	t-1,3 Dichloropropene	ND	ug / L	1	1		11/20/00
X00436	XG.2000.1298-3	127-18-4	Tetrachloroethene	ND	ug / L	1	1		11/20/00
X00436	XG.2000.1298-3	108-88-3	Toluene	ND	ug / L	1	1		11/20/00
X00436	XG.2000.1298-3	79-01-6	Trichloroethene	ND	ug / L	1	1		11/20/00
X00436	XG.2000.1298-3	75-69-4	Trichlorofluoromethane	ND	ug / L	1	5		11/20/00
X00436	XG.2000.1298-3	108-05-4	Vinyl acetate	ND	ug / L	1	5		11/20/00
X00436	XG.2000.1298-3	75-01-4	Vinyl chloride	ND	ug / L	1	5		11/20/00
X00444-001		**SW846 ME/8015A Diesel Range Organics by GC/FID**							
X00444	XG.2000.1288-1		Diesel Range Organics	ND	mg / L	1	25		11/17/00
X00444-009		**SW846 ME/8015A Diesel Range Organics by GC/FID**							
X00444	XG.2000.1315-1		Diesel Range Organics	ND	mg / L	1	25		12/01/00
X00445-001		**SW846 5030A/8015A GRO by GC/FID**							
5	XG.2000.1286-4		Gasoline Range Organics	ND	mg / L	1	0.05		11/18/00
X00445-007		**SW846 5030A/8015A GRO by GC/FID**							
X00445	XG.2000.1317-9		Gasoline Range Organics	ND	mg / L	1	0.05		12/01/00

QC Type **MS: Matrix Spike** QC Matrix **WATER**

QC Group	Run Sequence	CAS #	Analyte	Result	Units	Dilution Factor	Detection Limit	Code	Run Date
X00427-008		**SW846 3510B/8270B SVOCs by GC/MS**							
X00427	XG.2000.1248-18	120-82-1	1,2,4-Trichlorobenzene	70	% Recovery	15	NA		11/08/00
X00427	XG.2000.1248-18	121-14-2	2,4-Dinitrotoluene	72	% Recovery	15	NA		11/08/00
X00427	XG.2000.1248-18	95-57-8	2-Chlorophenol	79	% Recovery	15	NA		11/08/00
X00427	XG.2000.1248-18	59-50-7	4-Chloro-3-methylphenol	85	% Recovery	15	NA		11/08/00
X00427	XG.2000.1248-18	100-02-7	4-Nitrophenol	42	% Recovery	15	NA		11/08/00
X00427	XG.2000.1248-18	83-32-9	Acenaphthene	68	% Recovery	15	NA		11/08/00
X00427	XG.2000.1248-18	117-84-0	di-n-Octylpthalate	49	% Recovery	15	NA		11/08/00
X00427	XG.2000.1248-18	621-64-7	n-Nitroso-di-n-propylamine	93	% Recovery	15	NA		11/08/00
X00427	XG.2000.1248-18	87-86-5	Pentachlorophenol	52	% Recovery	15	NA		11/08/00
X00427	XG.2000.1248-18	108-95-2	Phenol	58	% Recovery	15	NA		11/08/00
X00427	XG.2000.1248-18	129-00-0	Pyrene	43	% Recovery	15	NA		11/08/00
X00436-013		**SW846 8260A Purgeable VOCs by GC/MS**							
X00436	XG.2000.1263-5	75-34-3	1,1 Dichloroethene	112	% Recovery	1	NA		11/13/00
X00436	XG.2000.1263-5	106-46-7	1,4 Dichlorobenzene	108	% Recovery	1	NA		11/13/00
36	XG.2000.1263-5	71-43-2	Benzene	113	% Recovery	1	NA		11/13/00
36	XG.2000.1263-5	108-90-7	Chlorobenzene	112	% Recovery	1	NA		11/13/00

Quality Control Summary

Client: **CH2MHILL**

Project: **0011151** **160660.02.FF.SA**

Explanation of codes

D	*Not applicable due to sample dilu*
L	*Not applicable due to MDL proxim*

X00436	XG.2000.1263-5	108-88-3	Toluene	116	% Recovery	1	NA		11/13/00
X00436	XG.2000.1263-5	79-01-6	Trichloroethene	113	% Recovery	1	NA		11/13/00
X00444-007		**SW846 ME/8015A Diesel Range Organics by GC/FID**							
X00444	XG.2000.1288-7		Diesel Range Organics	88	% Recovery	1	NA		11/17/00
X00445-005		**SW846 5030A/8015A GRO by GC/FID**							
X00445	XG.2000.1286-8		Gasoline Range Organics	106	% Recovery	1	NA		11/18/00

QC Type **MSD: Matrix Spike Duplicate Accuracy** QC Matrix **WATER**

QC Group	Run Sequence	CAS #	Analyte	Result	Units	Dilution Factor	Detection Limit	Code	Run Date
X00427-009		**SW846 3510B/8270B SVOCs by GC/MS**							
X00427	XG.2000.1248-19	120-82-1	1,2,4-Trichlorobenzene	63	% Recovery	26	NA		11/08/00
X00427	XG.2000.1248-19	121-14-2	2,4-Dinitrotoluene	67	% Recovery	26	NA		11/08/00
X00427	XG.2000.1248-19	95-57-8	2-Chlorophenol	68	% Recovery	26	NA		11/08/00
X00427	XG.2000.1248-19	59-50-7	4-Chloro-3-methylphenol	74	% Recovery	26	NA		11/08/00
X00427	XG.2000.1248-19	100-02-7	4-Nitrophenol	< 1	% Recovery	26	NA		11/08/00
X00427	XG.2000.1248-19	83-32-9	Acenaphthene	64	% Recovery	26	NA		11/08/00
X00427	XG.2000.1248-19	117-84-0	di-n-Octylpthalate	41	% Recovery	26	NA		11/08/00
X00427	XG.2000.1248-19	621-64-7	n-Nitroso-di-n-propylamine	88	% Recovery	26	NA		11/08/00
X00427	XG.2000.1248-19	87-86-5	Pentachlorophenol	48	% Recovery	26	NA		11/08
X00427	XG.2000.1248-19	108-95-2	Phenol	43	% Recovery	26	NA		11/08
X00427	XG.2000.1248-19	129-00-0	Pyrene	41	% Recovery	26	NA		11/08/00
X00436-014		**SW846 8260A Purgeable VOCs by GC/MS**							
X00436	XG.2000.1263-6	75-34-3	1,1 Dichloroethene	106	% Recovery	1	NA		11/13/00
X00436	XG.2000.1263-6	106-46-7	1,4 Dichlorobenzene	100	% Recovery	1	NA		11/13/00
X00436	XG.2000.1263-6	71-43-2	Benzene	110	% Recovery	1	NA		11/13/00
X00436	XG.2000.1263-6	108-90-7	Chlorobenzene	107	% Recovery	1	NA		11/13/00
X00436	XG.2000.1263-6	108-88-3	Toluene	109	% Recovery	1	NA		11/13/00
X00436	XG.2000.1263-6	79-01-6	Trichloroethene	108	% Recovery	1	NA		11/13/00
X00444-008		**SW846 ME/8015A Diesel Range Organics by GC/FID**							
X00444	XG.2000.1288-8		Diesel Range Organics	88	% Recovery	1	NA		11/17/00
X00445-006		**SW846 5030A/8015A GRO by GC/FID**							
X00445	XG.2000.1286-9		Gasoline Range Organics	99	% Recovery	1	NA		11/18/00

QC Type **MSD: Matrix Spike Duplicate Precision** QC Matrix **WATER**

QC Group	Run Sequence	CAS #	Analyte	Result	Units	Dilution Factor	Detection Limit	Code	Run Date
X00427-009		**SW846 3510B/8270B SVOCs by GC/MS**							
X00427	XG.2000.1248-19	120-82-1	1,2,4-Trichlorobenzene	11	RPD	26	NA		11/08/00
X00427	XG.2000.1248-19	121-14-2	2,4-Dinitrotoluene	8	RPD	26	NA		11/08/00
X00427	XG.2000.1248-19	95-57-8	2-Chlorophenol	15	RPD	26	NA		11/08/00
X00427	XG.2000.1248-19	59-50-7	4-Chloro-3-methylphenol	14	RPD	26	NA		11/08
X00427	XG.2000.1248-19	100-02-7	4-Nitrophenol	< 1	RPD	26	NA		11/08/00

Quality Control Summary

Client: CH2MHILL

Project: 0011151 160660.02.FF.SA

Explanation of codes

D	*Not applicable due to sample dilution*
L	*Not applicable due to MDL proximity*

X00427	XG.2000.1248-19	83-32-9	Acenaphthene	6	RPD	26	NA		11/08/00
X00427	XG.2000.1248-19	117-84-0	di-n-Octylpthalate	17	RPD	26	NA		11/08/00
X00427	XG.2000.1248-19	621-64-7	n-Nitroso-di-n-propylamine	6	RPD	26	NA		11/08/00
X00427	XG.2000.1248-19	87-86-5	Pentachlorophenol	6	RPD	26	NA		11/08/00
X00427	XG.2000.1248-19	108-95-2	Phenol	30	RPD	26	NA		11/08/00
X00427	XG.2000.1248-19	129-00-0	Pyrene	5	RPD	26	NA		11/08/00
X00436-014		**SW846 8260A Purgeable VOCs by GC/MS**							
X00436	XG.2000.1263-6	75-34-3	1,1 Dichloroethene	6	RPD	1	NA		11/13/00
X00436	XG.2000.1263-6	106-46-7	1,4 Dichlorobenzene	8	RPD	1	NA		11/13/00
X00436	XG.2000.1263-6	71-43-2	Benzene	3	RPD	1	NA		11/13/00
X00436	XG.2000.1263-6	108-90-7	Chlorobenzene	5	RPD	1	NA		11/13/00
X00436	XG.2000.1263-6	108-88-3	Toluene	6	RPD	1	NA		11/13/00
X00436	XG.2000.1263-6	79-01-6	Trichloroethene	5	RPD	1	NA		11/13/00
X00444-008		**SW846 ME/8015A Diesel Range Organics by GC/FID**							
X00444	XG.2000.1288-8		Diesel Range Organics	< 1	RPD	1	NA		11/17/00
X00445-006		**SW846 5030A/8015A GRO by GC/FID**							
X00445	XG.2000.1286-9		Gasoline Range Organics	7	RPD	1	NA		11/18/00

Assaigai Analytical Laboratories, Inc.

Surrogate Summary: QC

Client: CH2MHILL

Project: 0011151 160660.02.FF.SA

QC Type: **LCS** QC Matrix: **WATER**

QC Group	Run Sequence	CAS #	Analyte	Result	Units	Dilution Factor	Detection Limit	Code	Run Date
X00427-002		8270							
X00427	XG.2000.1241-2	NA	*2,4,6-TRIBROMOPHENOL	93	% Recovery	1	NA		11/06/00
X00427	XG.2000.1241-2	NA	*2-FLUOROBIPHENYL	86	% Recovery	1	NA		11/06/00
X00427	XG.2000.1241-2	NA	*2-FLUOROPHENOL	49	% Recovery	1	NA		11/06/00
X00427	XG.2000.1241-2	NA	*NITROBENZENE-D5	88	% Recovery	1	NA		11/06/00
X00427	XG.2000.1241-2	NA	*PHENOL-D6	35	% Recovery	1	NA		11/06/00
X00427	XG.2000.1241-2	NA	*TERPHENYL-D14	89	% Recovery	1	NA		11/06/00
X00436-003		8260							
X00436	XG.2000.1263-3	NA	1,2 Dichloroethane-D4 (SS)	92	% Recovery	1	NA		11/13/00
X00436	XG.2000.1263-3	NA	4-Bromofluorobenzene (SS)	99	% Recovery	1	NA		11/13/00
X00436	XG.2000.1263-3	NA	Dibromofluoromethane (SS)	100	% Recovery	1	NA		11/13/00
X00436	XG.2000.1263-3	NA	Toluene-D8 (SS)	101	% Recovery	1	NA		11/13/00
X00444-002		DRO							
X00444	XG.2000.1288-2	NA	O-terphenyl	85	% Recovery	1	NA		11/17/00
X00445-002		GRO							
[illegible]5	XG.2000.1286-5	NA	4-Bromofluorobenzene-FID	101	% Recovery	1	NA		11/18/00
[illegible]5	XG.2000.1286-5	NA	4-Bromofluorobenzene-PID	ND	% Recovery	1	NA		11/18/00
X00445	XG.2000.1286-5	NA	aaa-Trifluorotoluene-FID	105	% Recovery	1	NA		11/18/00
X00445	XG.2000.1286-5	NA	aaa-Trifluorotoluene-PID	ND	% Recovery	1	NA		11/18/00

QC Type: **LCSD** QC Matrix: **WATER**

QC Group	Run Sequence	CAS #	Analyte	Result	Units	Dilution Factor	Detection Limit	Code	Run Date
X00427-003		8270							
X00427	XG.2000.1241-3	NA	*2,4,6-TRIBROMOPHENOL	92	% Recovery	1	NA		11/06/00
X00427	XG.2000.1241-3	NA	*2-FLUOROBIPHENYL	89	% Recovery	1	NA		11/06/00
X00427	XG.2000.1241-3	NA	*2-FLUOROPHENOL	46	% Recovery	1	NA		11/06/00
X00427	XG.2000.1241-3	NA	*NITROBENZENE-D5	87	% Recovery	1	NA		11/06/00
X00427	XG.2000.1241-3	NA	*PHENOL-D6	34	% Recovery	1	NA		11/06/00
X00427	XG.2000.1241-3	NA	*TERPHENYL-D14	88	% Recovery	1	NA		11/06/00
X00436-004		8260							
X00436	XG.2000.1263-4	NA	1,2 Dichloroethane-D4 (SS)	95	% Recovery	1	NA		11/13/00
X00436	XG.2000.1263-4	NA	4-Bromofluorobenzene (SS)	99	% Recovery	1	NA		11/13/00
X00436	XG.2000.1263-4	NA	Dibromofluoromethane (SS)	101	% Recovery	1	NA		11/13/00
X00436	XG.2000.1263-4	NA	Toluene-D8 (SS)	101	% Recovery	1	NA		11/13/00
X00444-003		DRO							
X00444	XG.2000.1288-3	NA	O-terphenyl	81	% Recovery	1	NA		11/17/00

Surrogate Summary: QC

Client: **CH2MHILL**

Project: **0011151** **160660.02.FF.SA**

X00445-003		**GRO**							
X00445	XG.2000.1286-6	NA	4-Bromofluorobenzene-FID	103	% Recovery	1	NA		11/18/00
X00445	XG.2000.1286-6	NA	4-Bromofluorobenzene-PID	ND	% Recovery	1	NA		11/18/00
X00445	XG.2000.1286-6	NA	aaa-Trifluorotoluene-FID	104	% Recovery	1	NA		11/18/00
X00445	XG.2000.1286-6	NA	aaa-Trifluorotoluene-PID	ND	% Recovery	1	NA		11/18/00

QC Type **MB** QC Matrix **WATER**

QC Group	Run Sequence	CAS #	Analyte	Result	Units	Dilution Factor	Detection Limit	Code	Run Date
X00427-001		**8270**							
X00427	XG.2000.1241-1	NA	*2,4,6-TRIBROMOPHENOL	87	% Recovery	1	NA		11/06/00
X00427	XG.2000.1241-1	NA	*2-FLUOROBIPHENYL	85	% Recovery	1	NA		11/06/00
X00427	XG.2000.1241-1	NA	*2-FLUOROPHENOL	45	% Recovery	1	NA		11/06/00
X00427	XG.2000.1241-1	NA	*NITROBENZENE-D5	84	% Recovery	1	NA		11/06/00
X00427	XG.2000.1241-1	NA	*PHENOL-D6	31	% Recovery	1	NA		11/06/00
X00427	XG.2000.1241-1	NA	*TERPHENYL-D14	88	% Recovery	1	NA		11/06/00
X00427-014		**8270**							
X00427	XG.2000.1255-4	NA	*2,4,6-TRIBROMOPHENOL	88	% Recovery	1	NA		11/09/00
X00427	XG.2000.1255-4	NA	*2-FLUOROBIPHENYL	80	% Recovery	1	NA		11/09/00
X00427	XG.2000.1255-4	NA	*2-FLUOROPHENOL	38	% Recovery	1	NA		11/09
X00427	XG.2000.1255-4	NA	*NITROBENZENE-D5	83	% Recovery	1	NA		11/09/0
X00427	XG.2000.1255-4	NA	*PHENOL-D6	26	% Recovery	1	NA		11/09/0
X00427	XG.2000.1255-4	NA	*TERPHENYL-D14	82	% Recovery	1	NA		11/09/0
X00427-019		**8270**							
X00427	XG.2000.1248-11	NA	*2,4,6-TRIBROMOPHENOL	79	% Recovery	1	NA		11/08/0
X00427	XG.2000.1248-11	NA	*2-FLUOROBIPHENYL	78	% Recovery	1	NA		11/08/0
X00427	XG.2000.1248-11	NA	*2-FLUOROPHENOL	44	% Recovery	1	NA		11/08/0
X00427	XG.2000.1248-11	NA	*NITROBENZENE-D5	79	% Recovery	1	NA		11/08/0
X00427	XG.2000.1248-11	NA	*PHENOL-D6	35	% Recovery	1	NA		11/08/0
X00427	XG.2000.1248-11	NA	*TERPHENYL-D14	71	% Recovery	1	NA		11/08/0
X00427-022		**8270**							
X00427	XG.2000.1268-1	NA	*2,4,6-TRIBROMOPHENOL	75	% Recovery	1	NA		11/09/0
X00427	XG.2000.1268-1	NA	*2-FLUOROBIPHENYL	70	% Recovery	1	NA		11/09/0
X00427	XG.2000.1268-1	NA	*2-FLUOROPHENOL	40	% Recovery	1	NA		11/09/0
X00427	XG.2000.1268-1	NA	*NITROBENZENE-D5	73	% Recovery	1	NA		11/09/0
X00427	XG.2000.1268-1	NA	*PHENOL-D6	31	% Recovery	1	NA		11/09/0
X00427	XG.2000.1268-1	NA	*TERPHENYL-D14	68	% Recovery	1	NA		11/09/0
X00427-024		**8270**							
X00427	XG.2000.1291-2	NA	*2,4,6-TRIBROMOPHENOL	96	% Recovery	1	NA		11/17/0
X00427	XG.2000.1291-2	NA	*2-FLUOROBIPHENYL	81	% Recovery	1	NA		11/17/0
X00427	XG.2000.1291-2	NA	*2-FLUOROPHENOL	50	% Recovery	1	NA		11/17/0
X00427	XG.2000.1291-2	NA	*NITROBENZENE-D5	81	% Recovery	1	NA		11/17/0
X00427	XG.2000.1291-2	NA	*PHENOL-D6	35	% Recovery	1	NA		11/17/0
X00427	XG.2000.1291-2	NA	*TERPHENYL-D14	95	% Recovery	1	NA		11/17/

Surrogate Summary: QC

Client: CH2MHILL

Project: 0011151 160660.02.FF.SA

X00427-026		8270							
X00427	XG.2000.1307-1	NA	*2,4,6-TRIBROMOPHENOL	78	% Recovery	1	NA		11/28/00
X00427	XG.2000.1318-1	NA	*2,4,6-TRIBROMOPHENOL	78	% Recovery	1	NA		11/28/00
X00427	XG.2000.1307-1	NA	*2-FLUOROBIPHENYL	77	% Recovery	1	NA		11/28/00
X00427	XG.2000.1318-1	NA	*2-FLUOROBIPHENYL	77	% Recovery	1	NA		11/28/00
X00427	XG.2000.1307-1	NA	*2-FLUOROPHENOL	40	% Recovery	1	NA		11/28/00
X00427	XG.2000.1318-1	NA	*2-FLUOROPHENOL	40	% Recovery	1	NA		11/28/00
X00427	XG.2000.1307-1	NA	*NITROBENZENE-D5	76	% Recovery	1	NA		11/28/00
X00427	XG.2000.1318-1	NA	*NITROBENZENE-D5	76	% Recovery	1	NA		11/28/00
X00427	XG.2000.1307-1	NA	*PHENOL-D6	28	% Recovery	1	NA		11/28/00
X00427	XG.2000.1318-1	NA	*PHENOL-D6	28	% Recovery	1	NA		11/28/00
X00427	XG.2000.1307-1	NA	*TERPHENYL-D14	64	% Recovery	1	NA		11/28/00
X00427	XG.2000.1318-1	NA	*TERPHENYL-D14	64	% Recovery	1	NA		11/28/00
X00436-001		8260							
X00436	XG.2000.1263-1	NA	1,2 Dichloroethane-D4 (SS)	88	% Recovery	1	NA		11/13/00
X00436	XG.2000.1263-1	NA	4-Bromofluorobenzene (SS)	96	% Recovery	1	NA		11/13/00
X00436	XG.2000.1263-1	NA	Dibromofluoromethane (SS)	98	% Recovery	1	NA		11/13/00
X00436	XG.2000.1263-1	NA	Toluene-D8 (SS)	99	% Recovery	1	NA		11/13/00
X00436-015		8260							
X00436	XG.2000.1274-1	NA	1,2 Dichloroethane-D4 (SS)	92	% Recovery	1	NA		11/14/00
X00436	XG.2000.1274-1	NA	4-Bromofluorobenzene (SS)	97	% Recovery	1	NA		11/14/00
X00436	XG.2000.1274-1	NA	Dibromofluoromethane (SS)	99	% Recovery	1	NA		11/14/00
	XG.2000.1274-1	NA	Toluene-D8 (SS)	100	% Recovery	1	NA		11/14/00
X00436-018		8260							
X00436	XG.2000.1274-4	NA	1,2 Dichloroethane-D4 (SS)	87	% Recovery	1	NA		11/15/00
X00436	XG.2000.1274-4	NA	4-Bromofluorobenzene (SS)	96	% Recovery	1	NA		11/15/00
X00436	XG.2000.1274-4	NA	Dibromofluoromethane (SS)	97	% Recovery	1	NA		11/15/00
X00436	XG.2000.1274-4	NA	Toluene-D8 (SS)	101	% Recovery	1	NA		11/15/00
X00436-029		8260							
X00436	XG.2000.1298-1	NA	1,2 Dichloroethane-D4 (SS)	88	% Recovery	1	NA		11/17/00
X00436	XG.2000.1298-1	NA	4-Bromofluorobenzene (SS)	97	% Recovery	1	NA		11/17/00
X00436	XG.2000.1298-1	NA	Dibromofluoromethane (SS)	99	% Recovery	1	NA		11/17/00
X00436	XG.2000.1298-1	NA	Toluene-D8 (SS)	101	% Recovery	1	NA		11/17/00
X00436-032		8260							
X00436	XG.2000.1298-3	NA	1,2 Dichloroethane-D4 (SS)	88	% Recovery	1	NA		11/20/00
X00436	XG.2000.1298-3	NA	4-Bromofluorobenzene (SS)	96	% Recovery	1	NA		11/20/00
X00436	XG.2000.1298-3	NA	Dibromofluoromethane (SS)	98	% Recovery	1	NA		11/20/00
X00436	XG.2000.1298-3	NA	Toluene-D8 (SS)	99	% Recovery	1	NA		11/20/00
X00444-001		DRO							
X00444	XG.2000.1288-1	NA	O-terphenyl	75	% Recovery	1	NA		11/17/00
X00444-009		DRO							
X00444	XG.2000.1315-1	NA	O-terphenyl	101	% Recovery	1	NA		12/01/00
X00445-001		GRO							
X00445	XG.2000.1286-4	NA	4-Bromofluorobenzene-FID	95	% Recovery	1	NA		11/18/00
[illegible]15	XG.2000.1286-4	NA	4-Bromofluorobenzene-PID	382	% Recovery	1	NA		11/18/00
[illegible]5	XG.2000.1286-4	NA	aaa-Trifluorotoluene-FID	100	% Recovery	1	NA		11/18/00

Surrogate Summary: QC

Client: **CH2MHILL**

Project: **0011151** **160660.02.FF.SA**

X00445	XG.2000.1286-4	NA	aaa-Trifluorotoluene-PID	14	% Recovery	1	NA		11/18/00
X00445-007		GRO							
X00445	XG.2000.1317-9	NA	4-Bromofluorobenzene-FID	85	% Recovery	1	NA		12/01/00
X00445	XG.2000.1317-9	NA	4-Bromofluorobenzene-PID	ND	% Recovery	1	NA		12/01/00
X00445	XG.2000.1317-9	NA	aaa-Trifluorotoluene-FID	103	% Recovery	1	NA		12/01/00
X00445	XG.2000.1317-9	NA	aaa-Trifluorotoluene-PID	ND	% Recovery	1	NA		12/01/00

QC Type **MS** QC Matrix **WATER**

QC Group	Run Sequence	CAS #	Analyte	Result	Units	Dilution Factor	Detection Limit	Code	Run Date
X00427-008		8270							
X00427	XG.2000.1248-18	NA	*2,4,6-TRIBROMOPHENOL	71	% Recovery	15	NA		11/08/00
X00427	XG.2000.1248-18	NA	*2-FLUOROBIPHENYL	70	% Recovery	15	NA		11/08/00
X00427	XG.2000.1248-18	NA	*2-FLUOROPHENOL	57	% Recovery	15	NA		11/08/00
X00427	XG.2000.1248-18	NA	*NITROBENZENE-D5	91	% Recovery	15	NA		11/08/00
X00427	XG.2000.1248-18	NA	*PHENOL-D6	42	% Recovery	15	NA		11/08/00
X00427	XG.2000.1248-18	NA	*TERPHENYL-D14	34	% Recovery	15	NA		11/08/00
X00436-013		8260							
X00436	XG.2000.1263-5	NA	1,2 Dichloroethane-D4 (SS)	74	% Recovery	1	NA		11/13/00
X00436	XG.2000.1263-5	NA	4-Bromofluorobenzene (SS)	93	% Recovery	1	NA		11/13
X00436	XG.2000.1263-5	NA	Dibromofluoromethane (SS)	96	% Recovery	1	NA		11/13
X00436	XG.2000.1263-5	NA	Toluene-D8 (SS)	99	% Recovery	1	NA		11/13/00
X00444-007		DRO							
X00444	XG.2000.1288-7	NA	O-terphenyl	90	% Recovery	1	NA		11/17/00
X00445-005		GRO							
X00445	XG.2000.1286-8	NA	4-Bromofluorobenzene-FID	104	% Recovery	1	NA		11/18/00
X00445	XG.2000.1286-8	NA	4-Bromofluorobenzene-PID	ND	% Recovery	1	NA		11/18/00
X00445	XG.2000.1286-8	NA	aaa-Trifluorotoluene-FID	108	% Recovery	1	NA		11/18/00
X00445	XG.2000.1286-8	NA	aaa-Trifluorotoluene-PID	242	% Recovery	1	NA		11/18/00

QC Type **MSD** QC Matrix **WATER**

QC Group	Run Sequence	CAS #	Analyte	Result	Units	Dilution Factor	Detection Limit	Code	Run Date
X00427-009		8270							
X00427	XG.2000.1248-19	NA	*2,4,6-TRIBROMOPHENOL	65	% Recovery	26	NA		11/08/00
X00427	XG.2000.1248-19	NA	*2-FLUOROBIPHENYL	67	% Recovery	26	NA		11/08/00
X00427	XG.2000.1248-19	NA	*2-FLUOROPHENOL	48	% Recovery	26	NA		11/08/00
X00427	XG.2000.1248-19	NA	*NITROBENZENE-D5	82	% Recovery	26	NA		11/08/00
X00427	XG.2000.1248-19	NA	*PHENOL-D6	37	% Recovery	26	NA		11/08/00
X00427	XG.2000.1248-19	NA	*TERPHENYL-D14	32	% Recovery	26	NA		11/08/00
X00436-014		8260							
X00436	XG.2000.1263-6	NA	1,2 Dichloroethane-D4 (SS)	79	% Recovery	1	NA		11/13

Surrogate Summary: QC

Client: **CH2MHILL**

ct: **0011151** **160660.02.FF.SA**

X00436	XG.2000.1263-6	NA	4-Bromofluorobenzene (SS)	95	% Recovery	1	NA		11/13/00
X00436	XG.2000.1263-6	NA	Dibromofluoromethane (SS)	96	% Recovery	1	NA		11/13/00
X00436	XG.2000.1263-6	NA	Toluene-D8 (SS)	100	% Recovery	1	NA		11/13/00
X00444-008		DRO							
X00444	XG.2000.1288-8	NA	O-terphenyl	90	% Recovery	1	NA		11/17/00
X00445-006		GRO							
X00445	XG.2000.1286-9	NA	4-Bromofluorobenzene-FID	101	% Recovery	1	NA		11/18/00
X00445	XG.2000.1286-9	NA	4-Bromofluorobenzene-PID	ND	% Recovery	1	NA		11/18/00
X00445	XG.2000.1286-9	NA	aaa-Trifluorotoluene-FID	103	% Recovery	1	NA		11/18/00
X00445	XG.2000.1286-9	NA	aaa-Trifluorotoluene-PID	ND	% Recovery	1	NA		11/18/00

Surrogate Summary: Fraction

Client: **CH2MHILL**

ect: **0011151** **160660.02.FF.SA**

Client Sample ID **KAFB 1061** Sample Matrix **H2O**

QC Group	Run Sequence	CAS #	Analyte	Result	Units	Dilution Factor	Detection Limit	Code	Run Date
0011151-01A		**DRO**							**X00444-006**
X00444	XG.2000.1288-6	NA	O-terphenyl	80	% Recovery	1	NA		11/17/00
0011151-01B		**8270**							**X00427-025**
X00427	XG.2000.1291-3	NA	*2,4,6-TRIBROMOPHENOL	97	% Recovery	1	NA		11/17/00
X00427	XG.2000.1334-1	NA	*2,4,6-TRIBROMOPHENOL	97	% Recovery	1	NA		11/17/00
X00427	XG.2000.1291-3	NA	*2-FLUOROBIPHENYL	88	% Recovery	1	NA		11/17/00
X00427	XG.2000.1334-1	NA	*2-FLUOROBIPHENYL	88	% Recovery	1	NA		11/17/00
X00427	XG.2000.1291-3	NA	*2-FLUOROPHENOL	52	% Recovery	1	NA		11/17/00
X00427	XG.2000.1334-1	NA	*2-FLUOROPHENOL	52	% Recovery	1	NA		11/17/00
X00427	XG.2000.1291-3	NA	*NITROBENZENE-D5	86	% Recovery	1	NA		11/17/00
X00427	XG.2000.1334-1	NA	*NITROBENZENE-D5	86	% Recovery	1	NA		11/17/00
X00427	XG.2000.1291-3	NA	*PHENOL-D6	36	% Recovery	1	NA		11/17/00
X00427	XG.2000.1334-1	NA	*PHENOL-D6	36	% Recovery	1	NA		11/17/00
X00427	XG.2000.1291-3	NA	*TERPHENYL-D14	96	% Recovery	1	NA		11/17/00
X00427	XG.2000.1334-1	NA	*TERPHENYL-D14	96	% Recovery	1	NA		11/17/00
0011151-01C		**GRO**							**X00445-004**
[illegible]5	XG.2000.1286-7	NA	4-Bromofluorobenzene-FID	96	% Recovery	1	NA		11/18/00
[illegible]5	XG.2000.1286-7	NA	4-Bromofluorobenzene-PID	1720	% Recovery	1	NA		11/18/00
X00445	XG.2000.1286-7	NA	aaa-Trifluorotoluene-FID	102	% Recovery	1	NA		11/18/00
X00445	XG.2000.1286-7	NA	aaa-Trifluorotoluene-PID	56	% Recovery	1	NA		11/18/00
0011151-01D		**8260**							**X00436-033**
X00436	XG.2000.1298-4	NA	1,2 Dichloroethane-D4 (SS)	88	% Recovery	1	NA		11/20/00
X00436	XG.2000.1298-4	NA	4-Bromofluorobenzene (SS)	96	% Recovery	1	NA		11/20/00
X00436	XG.2000.1298-4	NA	Dibromofluoromethane (SS)	98	% Recovery	1	NA		11/20/00
X00436	XG.2000.1298-4	NA	Toluene-D8 (SS)	100	% Recovery	1	NA		11/20/00

Client Sample ID **TRIP BLANK** Sample Matrix **H2O**

QC Group	Run Sequence	CAS #	Analyte	Result	Units	Dilution Factor	Detection Limit	Code	Run Date
0011151-02A		**8260**							**X00436-034**
X00436	XG.2000.1298-5	NA	1,2 Dichloroethane-D4 (SS)	90	% Recovery	1	NA		11/20/00
X00436	XG.2000.1298-5	NA	4-Bromofluorobenzene (SS)	96	% Recovery	1	NA		11/20/00
X00436	XG.2000.1298-5	NA	Dibromofluoromethane (SS)	100	% Recovery	1	NA		11/20/00
X00436	XG.2000.1298-5	NA	Toluene-D8 (SS)	102	% Recovery	1	NA		11/20/00

A AIGAI 17/1/00
ANALYTICAL 1-12-M18
LABORATORIES, INC. G-4 FR 43C

Chain of Cust dy Record

7300 JEFFERSON N.E.
ALBUQUERQUE, NEW MEXICO 87
(505) 345-8964

3332 WEDGEWOOD
EL PASO, TEXAS 79925
(915) 593-6000

127 EASTGATE DRIVE, 212-C
LOS ALAMOS, NEW MEXICO 87544
(505) 662-2558

Lab job No.: 11151 Date 11/16

Page 1 of 1

Client: CH2M HILL

Address: 600 INDIAN SCHOOL NE #350

City / State / Zip: ABQ NM 87110

Project Name / Number: KAFB ST.106

Contract / Purchase Order / Quote:

Project Manager / Contact: S. MINCHAK

Telephone No.: 884 5600

Fax No.: 883.7504

Samplers: (signature)

AAL Fraction Number	Field Sample Number / Location	Date	Time	Sample Type	Type / Size of Container	Preservation Temp.	Preservation Chemical	No. of Containers	GRO 8015B	DRO 8015B	SVOC 8270	VOC 8260							Remarks
1A	KAFB 1061	11/16	1702	H_2O	2 x 1L AMBER	ICE	HCL	2		X									
1B	KAFB 1061	11/16	1702	H_2O	2 x 1L AMBER	ICE	NO	2			X								
1C	KAFB 1061	11/16	1702	H_2O	2 x 40 ML	ICE	HCL	2	X										
1D	KAFB 1061	11/16	1702	H_2O	2 x 40 ML	ICE	HCL	2				X							
2A	TRIP BLANK	11/16	1702	H_2O	2 x 40 ML	ICE	HCL	2				X							

Relinquished by:	Date	Received by:	Relinquished by:	Date	Received by:
Signature	11-17-00	Signature	Signature		Signature
Printed Steven Cr	Time 7:45am	Printed W G Hines	Printed	Time	Printed
Company AAL		Company CH2M HILL	Company		Company
Reason		Reason	Reason		Reason

Method of Shipment:

Shipment No.

Special Instructions:

Comments: STD TAT 5.0°C

After analysis, samples are to be:

- ☐ Disposed of (additional fee)
- ☐ Stored (30 days max)
- ☐ Stored over 30 days (additional fee)
- ☐ Returned to customer

COURIER

RECEIVED AUG 2 4 2000

ASSAIGAI
ANALYTICAL
LABORATORIES, INC.

7300 Jefferson, NE • Albuquerque, New Mexico 87109 • (505) 345-8964 • FAX (505) 345-7259

3332 Wedgewood Dr., Suite N • El Paso, Texas 79925 • (915) 593-6000 • FAX (915) 593-7820

127 Eastgate Drive, 212-C • Los Alamos, New Mexico 87544 • (505) 662-2558

Explanation of codes

B	*analyte detected in Method Blank*
E	*result is estimated*
H	*analyzed out of hold time*
N	*tentatively identified compound*
S	*subcontracted*
1-9	*see footnote*

CH2M HILL
attn: **SHARON MINCHAK**
6001 INDIAN SCHOOL NE STE 350
ALBUQUERQUE, NM 87110-4140

Assaigai Analytical Laboratories, Inc.

Certificate of Analysis

Client: **CH2M HILL**
Project: **0007231**

William P. Biava: President of Assaigai Analytical Laboratories, Inc.

Client Sample ID: ***ST106 ~~SB23~~ 45'*** SB-26 BP

Sample Matrix: ***SOIL***

Sample Collected: ***07/21/00 11:35:00***

Group	Run Sequence	CAS #	Analyte	Result	Units	Dilution Factor	Detection Limit	Code	Run Date
0007231-01A		**SW846 5030A/8015A GRO by GC/FID**							
X00273	XG.2000.796-12		Gasoline Range Organics	21000	mg / Kg	10000	0.25		07/26/00
0007231-01A		**SW846 8260A Purgeable VOCs by GC/MS**							
X00296	XG.2000.848-6	75-34-3	1,1 Dichloroethane	ND	mg / Kg	1000	0.005	2	08/08/00
X00296	XG.2000.848-6	75-34-3	1,1 Dichloroethene	ND	mg / Kg	1000	0.005	2	08/08/00
X00296	XG.2000.848-6	71-55-6	1,1,1 Trichloroethane	ND	mg / Kg	1000	0.005	2	08/08/00
X00296	XG.2000.848-6	630-20-6	1,1,1,2 Tetrachloroethane	ND	mg / Kg	1000	0.005	2	08/08/00
X00296	XG.2000.848-6	79-00-5	1,1,2 Trichloroethane	ND	mg / Kg	1000	0.005	2	08/08/00
X00296	XG.2000.848-6	79-34-5	1,1,2,2 Tetrachloroethane	ND	mg / Kg	1000	0.005	2	08/08/00
X00296	XG.2000.848-6	106-93-4	1,2 Dibromoethane (EDB)	ND	mg / Kg	1000	0.005	2	08/08/00
X00296	XG.2000.848-6	95-50-1	1,2 Dichlorobenzene	ND	mg / Kg	1000	0.005	2	08/08/00
X00296	XG.2000.848-6	107-06-2	1,2 Dichloroethane	ND	mg / Kg	1000	0.005	2	08/08/00
X00296	XG.2000.848-6	78-87-5	1,2 Dichloropropane	ND	mg / Kg	1000	0.005	2	08/08/00
X00296	XG.2000.848-6	96-18-4	1,2,3 Trichloropropane	ND	mg / Kg	1000	0.005	2	08/08/00
X00296	XG.2000.848-6	95-63-6	1,2,4-Trimethylbenzene	150	mg / Kg	1000	0.005	2	08/08/00
X00296	XG.2000.848-6	541-73-1	1,3 Dichlorobenzene	ND	mg / Kg	1000	0.005	2	08/08/00
X00296	XG.2000.848-6	108-67-8	1,3,5-Trimethylbenzene	37	mg / Kg	1000	0.005	2	08/08/00
X00296	XG.2000.848-6	764-41-0	1,4 Dichloro-2-butene	ND	mg / Kg	1000	0.05	2	08/08/00
X00296	XG.2000.848-6	106-46-7	1,4 Dichlorobenzene	ND	mg / Kg	1000	0.005	2	08/08/00
X00296	XG.2000.848-6	78-93-3	2-Butanone (MEK)	ND	mg / Kg	1000	0.025	2	08/08/00
X00296	XG.2000.848-6	110-75-8	2-Chloroethylvinylether	ND	mg / Kg	1000	0.025	2	08/08/00
X00296	XG.2000.848-6	591-78-6	2-Hexanone (MBK)	ND	mg / Kg	1000	0.025	2	08/08/00
X00296	XG.2000.848-6	108-10-1	4-Methyl-2-pentanone (MIBK)	ND	mg / Kg	1000	0.025	2	08/08/00

Member
American Council of
Independent Laboratories, Inc

REPRODUCTION OF THIS REPORT IN LESS THAN FULL REQUIRES THE WRITTEN CONSENT OF AAL.
THIS REPORT MAY NOT BE USED IN ANY MANNER BY THE CLIENT OR ANY OTHER THIRD PARTY TO CLAIM
PRODUCT ENDORSEMENT BY ANY ACCREDITATION PROGRAM

Certificate of Analysis

Client: **CH2M HILL**
Project: **0007231**

X00296	XG.2000.848-6	67-64-1	Acetone	ND	mg / Kg	1000	0.05	2	08/08/00
X00296	XG.2000.848-6	107-02-8	Acrolein	ND	mg / Kg	1000	0.1	2	08/08/00
X00296	XG.2000.848-6	107-13-1	Acrylonitrile	ND	mg / Kg	1000	0.1	2	08/08/00
X00296	XG.2000.848-6	71-43-2	Benzene	ND	mg / Kg	1000	0.005	2	08/08/00
X00296	XG.2000.848-6	75-27-4	Bromodichloromethane	ND	mg / Kg	1000	0.005	2	08/08/00
X00296	XG.2000.848-6	75-25-2	Bromoform	ND	mg / Kg	1000	0.005	2	08/08/00
X00296	XG.2000.848-6	74-83-9	Bromomethane	ND	mg / Kg	1000	0.025	2	08/08/00
X00296	XG.2000.848-6	75-15-0	Carbon disulfide	ND	mg / Kg	1000	0.025	2	08/08/00
X00296	XG.2000.848-6	56-23-5	Carbon tetrachloride	ND	mg / Kg	1000	0.005	2	08/08/00
X00296	XG.2000.848-6	108-90-7	Chlorobenzene	ND	mg / Kg	1000	0.005	2	08/08/00
X00296	XG.2000.848-6	124-48-1	Chlorodibromomethane	ND	mg / Kg	1000	0.005	2	08/08/00
X00296	XG.2000.848-6	75-00-3	Chloroethane	ND	mg / Kg	1000	0.025	2	08/08/00
X00296	XG.2000.848-6	67-66-3	Chloroform	ND	mg / Kg	1000	0.005	2	08/08/00
X00296	XG.2000.848-6	74-87-3	Chloromethane	ND	mg / Kg	1000	0.025	2	08/08/00
X00296	XG.2000.848-6	156-59-2	cis-1,2 dichloroethene	ND	mg / Kg	1000	0.005	2	08/08/00
X00296	XG.2000.848-6	10061-01-5	cis-1,3 dichloropropene	ND	mg / Kg	1000	0.005	2	08/08/00
X00296	XG.2000.848-6	74-95-3	Dibromomethane	ND	mg / Kg	1000	0.005	2	08/08/00
X00296	XG.2000.848-6	97-63-2	Ethyl methacrylate	ND	mg / Kg	1000	0.025	2	08/08/00
X00296	XG.2000.848-6	100-41-4	Ethylbenzene	22	mg / Kg	1000	0.005	2	08/08/00
X00296	XG.2000.848-6		Freon 113	ND	mg / Kg	1000	0.025	2	08/08/00
X00296	XG.2000.848-6	75-71-8	Freon 12	ND	mg / Kg	1000	0.05	2	08/08/00
X00296	XG.2000.848-6	74-88-4	Iodomethane	ND	mg / Kg	1000	0.025	2	08/08/00
X00296	XG.2000.848-6	1634-04-4	Methyl t-butyl ether (MTBE)	ND	mg / Kg	1000	0.005	2	08/08/00
X00296	XG.2000.848-6	75-09-2	Methylene chloride	ND	mg / Kg	1000	0.05	2	08/08/
X00296	XG.2000.848-6	91-20-3	Naphthalene	59	mg / Kg	1000	0.025	2	08/08/00
X00296	XG.2000.848-6	95-47-6	o-Xylene	22	mg / Kg	1000	0.005	2	08/08/00
X00296	XG.2000.848-6	108-38-3/106-42	p/m Xylenes	46	mg / Kg	1000	0.01	2	08/08/00
X00296	XG.2000.848-6	100-42-5	Styrene	ND	mg / Kg	1000	0.005	2	08/08/00
X00296	XG.2000.848-6	156-60-5	t-1,2 Dichloroethene	ND	mg / Kg	1000	0.005	2	08/08/00
X00296	XG.2000.848-6	10061-02-6	t-1,3 Dichloropropene	ND	mg / Kg	1000	0.005	2	08/08/00
X00296	XG.2000.848-6	127-18-4	Tetrachloroethene	ND	mg / Kg	1000	0.005	2	08/08/00
X00296	XG.2000.848-6	108-88-3	Toluene	14	mg / Kg	1000	0.005	2	08/08/00
X00296	XG.2000.848-6	79-01-6	Trichloroethene	ND	mg / Kg	1000	0.005	2	08/08/00
X00296	XG.2000.848-6	75-69-4	Trichlorofluoromethane	ND	mg / Kg	1000	0.025	2	08/08/00
X00296	XG.2000.848-6	108-05-4	Vinyl acetate	ND	mg / Kg	1000	0.025	2	08/08/00
X00296	XG.2000.848-6	75-01-4	Vinyl chloride	ND	mg / Kg	1000	0.025	2	08/08/00

0007231-01B **SW846 ME/8015A Diesel Range Organics by GC/FID**

X00272	XG.2000.798-2		Diesel Range Organics	23000	mg / Kg	50	25	07/27/00

SB-26 BJL

Client Sample ID: ***ST106 ~~SB23~~ 75'*** Sample Matrix: ***SOIL*** Sample Collected: *07/21/00 13:18:00*

QC Group	Run Sequence	CAS #	Analyte	Result	Units	Dilution Factor	Detection Limit	Code	Run Date

0007231-02A **SW846 5030A/8015A GRO by GC/FID**

X00273	XG.2000.796-13		Gasoline Range Organics	25000	mg / Kg	10000	0.25	07/26/00

Certificate of Analysis

nt: CH2M HILL
ject: 0007231

0007231-02A SW846 5030A/8021B Purgeable VOCs by GC/PID

X00269	XG.2000.792-2	71-43-2	Benzene	ND	mg / Kg	1000	0.005		07/26/00
X00269	XG.2000.792-2	100-41-4	Ethylbenzene	42	mg / Kg	1000	0.005		07/26/00
X00269	XG.2000.792-2	95-47-6	o-Xylene	44	mg / Kg	1000	0.005		07/26/00
X00269	XG.2000.792-2	108-38-3/106-42	p/m-Xylenes	120	mg / Kg	1000	0.01		07/26/00
X00269	XG.2000.792-2	108-88-3	Toluene	19	mg / Kg	1000	0.005		07/26/00

0007231-02B SW846 ME/8015A Diesel Range Organics by GC/FID

X00272	XG.2000.798-3		Diesel Range Organics	31000	mg / Kg	50	25		07/27/00

SB-26
BR

Client Sample ID: ST106 ~~SB23~~ 100' Sample Matrix: SOIL Sample Collected: 07/24/00 08:20:00

0007231-03A SW846 5030A/8015A GRO by GC/FID

X00273	XG.2000.796-14		Gasoline Range Organics	24000	mg / Kg	10000	0.25		07/26/00

0007231-03A SW846 8260A Purgeable VOCs by GC/MS

QC Group	Run Sequence	CAS #	Analyte	Result	Units	Dilution Factor	Detection Limit	Code	Run Date
X00296	XG.2000.848-7	75-34-3	1,1 Dichloroethane	ND	mg / Kg	1000	0.005	2	08/08/00
5	XG.2000.848-7	75-34-3	1,1 Dichloroethene	ND	mg / Kg	1000	0.005	2	08/08/00
6	XG.2000.848-7	71-55-6	1,1,1 Trichloroethane	ND	mg / Kg	1000	0.005	2	08/08/00
X00296	XG.2000.848-7	630-20-6	1,1,1,2 Tetrachloroethane	ND	mg / Kg	1000	0.005	2	08/08/00
X00296	XG.2000.848-7	79-00-5	1,1,2 Trichloroethane	ND	mg / Kg	1000	0.005	2	08/08/00
X00296	XG.2000.848-7	79-34-5	1,1,2,2 Tetrachloroethane	ND	mg / Kg	1000	0.005	2	08/08/00
X00296	XG.2000.848-7	106-93-4	1,2 Dibromoethane (EDB)	ND	mg / Kg	1000	0.005	2	08/08/00
X00296	XG.2000.848-7	95-50-1	1,2 Dichlorobenzene	ND	mg / Kg	1000	0.005	2	08/08/00
X00296	XG.2000.848-7	107-06-2	1,2 Dichloroethane	ND	mg / Kg	1000	0.005	2	08/08/00
X00296	XG.2000.848-7	78-87-5	1,2 Dichloropropane	ND	mg / Kg	1000	0.005	2	08/08/00
X00296	XG.2000.848-7	96-18-4	1,2,3 Trichloropropane	ND	mg / Kg	1000	0.005	2	08/08/00
X00296	XG.2000.848-7	95-63-6	1,2,4-Trimethylbenzene	190	mg / Kg	1000	0.005	2	08/08/00
X00296	XG.2000.848-7	541-73-1	1,3 Dichlorobenzene	ND	mg / Kg	1000	0.005	2	08/08/00
X00296	XG.2000.848-7	108-67-8	1,3,5-Trimethylbenzene	49	mg / Kg	1000	0.005	2	08/08/00
X00296	XG.2000.848-7	764-41-0	1,4 Dichloro-2-butene	ND	mg / Kg	1000	0.05	2	08/08/00
X00296	XG.2000.848-7	106-46-7	1,4 Dichlorobenzene	ND	mg / Kg	1000	0.005	2	08/08/00
X00296	XG.2000.848-7	78-93-3	2-Butanone (MEK)	ND	mg / Kg	1000	0.025	2	08/08/00
X00296	XG.2000.848-7	110-75-8	2-Chloroethylvinylether	ND	mg / Kg	1000	0.025	2	08/08/00
X00296	XG.2000.848-7	591-78-6	2-Hexanone (MBK)	ND	mg / Kg	1000	0.025	2	08/08/00
X00296	XG.2000.848-7	108-10-1	4-Methyl-2-pentanone (MIBK)	ND	mg / Kg	1000	0.025	2	08/08/00
X00296	XG.2000.848-7	67-64-1	Acetone	ND	mg / Kg	1000	0.05	2	08/08/00
X00296	XG.2000.848-7	107-02-8	Acrolein	ND	mg / Kg	1000	0.1	2	08/08/00
X00296	XG.2000.848-7	107-13-1	Acrylonitrile	ND	mg / Kg	1000	0.1	2	08/08/00
X00296	XG.2000.848-7	71-43-2	Benzene	ND	mg / Kg	1000	0.005	2	08/08/00
X00296	XG.2000.848-7	75-27-4	Bromodichloromethane	ND	mg / Kg	1000	0.005	2	08/08/00
X00296	XG.2000.848-7	75-25-2	Bromoform	ND	mg / Kg	1000	0.005	2	08/08/00
X00296	XG.2000.848-7	74-83-9	Bromomethane	ND	mg / Kg	1000	0.025	2	08/08/00

Certificate of Analysis

Client: **CH2M HILL**

Project: **0007231**

X00296	XG.2000.848-7	75-15-0	Carbon disulfide	ND	mg / Kg	1000	0.025	2	08/08/00
X00296	XG.2000.848-7	56-23-5	Carbon tetrachloride	ND	mg / Kg	1000	0.005	2	08/08/00
X00296	XG.2000.848-7	108-90-7	Chlorobenzene	ND	mg / Kg	1000	0.005	2	08/08/00
X00296	XG.2000.848-7	124-48-1	Chlorodibromomethane	ND	mg / Kg	1000	0.005	2	08/08/00
X00296	XG.2000.848-7	75-00-3	Chloroethane	ND	mg / Kg	1000	0.025	2	08/08/00
X00296	XG.2000.848-7	67-66-3	Chloroform	ND	mg / Kg	1000	0.005	2	08/08/00
X00296	XG.2000.848-7	74-87-3	Chloromethane	ND	mg / Kg	1000	0.025	2	08/08/00
X00296	XG.2000.848-7	156-59-2	cis-1,2 dichloroethene	ND	mg / Kg	1000	0.005	2	08/08/00
X00296	XG.2000.848-7	10061-01-5	cis-1,3 dichloropropene	ND	mg / Kg	1000	0.005	2	08/08/00
X00296	XG.2000.848-7	74-95-3	Dibromomethane	ND	mg / Kg	1000	0.005	2	08/08/00
X00296	XG.2000.848-7	97-63-2	Ethyl methacrylate	ND	mg / Kg	1000	0.025	2	08/08/00
X00296	XG.2000.848-7	100-41-4	Ethylbenzene	28	mg / Kg	1000	0.005	2	08/08/00
X00296	XG.2000.848-7		Freon 113	ND	mg / Kg	1000	0.025	2	08/08/00
X00296	XG.2000.848-7	75-71-8	Freon 12	ND	mg / Kg	1000	0.05	2	08/08/00
X00296	XG.2000.848-7	74-88-4	Iodomethane	ND	mg / Kg	1000	0.025	2	08/08/00
X00296	XG.2000.848-7	1634-04-4	Methyl t-butyl ether (MTBE)	ND	mg / Kg	1000	0.005	2	08/08/00
X00296	XG.2000.848-7	75-09-2	Methylene chloride	ND	mg / Kg	1000	0.05	2	08/08/00
X00296	XG.2000.848-7	91-20-3	Naphthalene	78	mg / Kg	1000	0.025	2	08/08/00
X00296	XG.2000.848-7	95-47-6	o-Xylene	32	mg / Kg	1000	0.005	2	08/08/00
X00296	XG.2000.848-7	108-38-3/106-42	p/m Xylenes	70	mg / Kg	1000	0.01	2	08/08/00
X00296	XG.2000.848-7	100-42-5	Styrene	ND	mg / Kg	1000	0.005	2	08/08/00
X00296	XG.2000.848-7	156-60-5	t-1,2 Dichloroethene	ND	mg / Kg	1000	0.005	2	08/08/00
X00296	XG.2000.848-7	10061-02-6	t-1,3 Dichloropropene	ND	mg / Kg	1000	0.005	2	08/08
X00296	XG.2000.848-7	127-18-4	Tetrachloroethene	ND	mg / Kg	1000	0.005	2	08/08/00
X00296	XG.2000.848-7	108-88-3	Toluene	35	mg / Kg	1000	0.005	2	08/08/00
X00296	XG.2000.848-7	79-01-6	Trichloroethene	ND	mg / Kg	1000	0.005	2	08/08/00
X00296	XG.2000.848-7	75-69-4	Trichlorofluoromethane	ND	mg / Kg	1000	0.025	2	08/08/00
X00296	XG.2000.848-7	108-05-4	Vinyl acetate	ND	mg / Kg	1000	0.025	2	08/08/00
X00296	XG.2000.848-7	75-01-4	Vinyl chloride	ND	mg / Kg	1000	0.025	2	08/08/00

0007231-03B **SW846 3550A/8270B SVOCs by GC/MS**

X00276	XG.2000.807-4	120-82-1	1,2,4-Trichlorobenzene	ND	mg / Kg	24	0.03	1	07/31/00
X00276	XG.2000.807-4	95-50-1	1,2-Dichlorobenzene	ND	mg / Kg	24	0.03	1	07/31/00
X00276	XG.2000.807-4	541-73-1	1,3-Dichlorobenzene	ND	mg / Kg	24	0.03	1	07/31/00
X00276	XG.2000.807-4	106-46-7	1,4-Dichlorobenzene	ND	mg / Kg	24	0.03	1	07/31/00
X00276	XG.2000.807-4	90-12-0	1-Methylnaphthalene	130	mg / Kg	24	0.03	1	07/31/00
X00276	XG.2000.807-4	58-90-2	2,3,4,6-Tetrachlorophenol	ND	mg / Kg	24	1.5	1	07/31/00
X00276	XG.2000.807-4	95-95-4	2,4,5-Trichlorophenol	ND	mg / Kg	24	0.3	1	07/31/00
X00276	XG.2000.807-4	88-06-2	2,4,6-Trichlorophenol	ND	mg / Kg	24	0.3	1	07/31/00
X00276	XG.2000.807-4	120-83-2	2,4-Dichlorophenol	ND	mg / Kg	24	0.3	1	07/31/00
X00276	XG.2000.807-4	105-67-9	2,4-Dimethylphenol	ND	mg / Kg	24	0.03	1	07/31/00
X00276	XG.2000.807-4	51-28-5	2,4-Dinitrophenol	ND	mg / Kg	24	0.67	1	07/31/00
X00276	XG.2000.807-4	121-14-2	2,4-Dinitrotoluene	ND	mg / Kg	24	0.3	1	07/31/00
X00276	XG.2000.807-4	606-20-2	2,6-Dinitrotoluene	ND	mg / Kg	24	0.3	1	07/31/00
X00276	XG.2000.807-4	91-58-7	2-Chloronaphthalene	ND	mg / Kg	24	0.03	1	07/31/00
X00276	XG.2000.807-4	95-57-8	2-Chlorophenol	ND	mg / Kg	24	0.03	1	07/31/00
X00276	XG.2000.807-4	91-57-6	2-Methylnaphthalene	ND	mg / Kg	24	0.03	1	07/31/00
X00276	XG.2000.807-4	95-48-7	2-Methylphenol	ND	mg / Kg	24	0.03	1	07/31/00

Certificate of Analysis

nt: CH2M HILL

Project: 0007231

X00276	XG.2000.807-4	88-74-4	2-Nitroaniline	ND	mg / Kg	24	0.3	1	07/31/00
X00276	XG.2000.807-4	88-75-5	2-Nitrophenol	ND	mg / Kg	24	0.3	1	07/31/00
X00276	XG.2000.807-4		3+4 Methylphenol	ND	mg / Kg	24	0.03	1	07/31/00
X00276	XG.2000.807-4	91-94-1	3,3-Dichlorobenzidine	ND	mg / Kg	24	0.3	1	07/31/00
X00276	XG.2000.807-4	99-09-2	3-Nitroaniline	ND	mg / Kg	24	0.3	1	07/31/00
X00276	XG.2000.807-4	534-52-1	4,6-Dinitro-2-methylphenol	ND	mg / Kg	24	0.3	1	07/31/00
X00276	XG.2000.807-4	101-55-3	4-Bromophenyl-phenylether	ND	mg / Kg	24	0.03	1	07/31/00
X00276	XG.2000.807-4	59-50-7	4-Chloro-3-methylphenol	ND	mg / Kg	24	0.3	1	07/31/00
X00276	XG.2000.807-4	106-47-8	4-Chloroaniline	ND	mg / Kg	24	0.3	1	07/31/00
X00276	XG.2000.807-4	7005-72-3	4-Chlorophenyl-phenylether	ND	mg / Kg	24	0.03	1	07/31/00
X00276	XG.2000.807-4	100-01-6	4-Nitroaniline	ND	mg / Kg	24	0.3	1	07/31/00
X00276	XG.2000.807-4	100-02-7	4-Nitrophenol	ND	mg / Kg	24	0.6	1	07/31/00
X00276	XG.2000.807-4	83-32-9	Acenaphthene	ND	mg / Kg	24	0.03	1	07/31/00
X00276	XG.2000.807-4	208-96-8	Acenaphthylene	ND	mg / Kg	24	0.03	1	07/31/00
X00276	XG.2000.807-4	62-53-3	Aniline	ND	mg / Kg	24	0.3	1	07/31/00
X00276	XG.2000.807-4	120-12-7	Anthracene	ND	mg / Kg	24	0.03	1	07/31/00
X00276	XG.2000.807-4		Azobenzene&1,2-Diphenylhydrazine	ND	mg / Kg	24	0.03	1	07/31/00
X00276	XG.2000.807-4	56-55-3	Benzo (a) anthracene	ND	mg / Kg	24	0.03	1	07/31/00
X00276	XG.2000.807-4	50-32-8	Benzo(a)pyrene	ND	mg / Kg	24	0.03	1	07/31/00
X00276	XG.2000.807-4		Benzo(b & k)fluoranthene	ND	mg / Kg	24	0.03	1	07/31/00
X00276	XG.2000.807-4	191-24-2	Benzo(g,h,i)perylene	ND	mg / Kg	24	0.3	1	07/31/00
X00276	XG.2000.807-4	64-85-0	Benzoic acid	ND	mg / Kg	24	3	1	07/31/00
6	XG.2000.807-4	100-51-6	Benzyl alcohol	ND	mg / Kg	24	1.5	1	07/31/00
76	XG.2000.807-4	111-44-4	bis (2-Chloroethyl) ether	ND	mg / Kg	24	0.03	1	07/31/00
X00276	XG.2000.807-4	111-91-1	bis(2-Chloroethoxy)methane	ND	mg / Kg	24	0.03	1	07/31/00
X00276	XG.2000.807-4	108-60-1	bis(2-Chloroisopropyl)ether	ND	mg / Kg	24	0.03	1	07/31/00
X00276	XG.2000.807-4	117-81-7	bis(2-Ethylhexyl)phthalate	ND	mg / Kg	24	0.3	1	07/31/00
X00276	XG.2000.807-4	85-68-7	Butylbenzylphthalate	ND	mg / Kg	24	0.03	1	07/31/00
X00276	XG.2000.807-4	218-01-9	Chrysene	ND	mg / Kg	24	0.03	1	07/31/00
X00276	XG.2000.807-4	84-74-2	di-n-Butylphthalate	ND	mg / Kg	24	0.3	1	07/31/00
X00276	XG.2000.807-4	117-84-0	di-n-Octylpthalate	ND	mg / Kg	24	0.3	1	07/31/00
X00276	XG.2000.807-4	53-70-3	Dibenz(a,h)anthracene	ND	mg / Kg	24	0.3	1	07/31/00
X00276	XG.2000.807-4	132-64-9	Dibenzofuran	1.6	mg / Kg	24	0.03	1	07/31/00
X00276	XG.2000.807-4	84-66-2	Diethylphthalate	ND	mg / Kg	24	0.03	1	07/31/00
X00276	XG.2000.807-4	131-11-3	Dimethylphthalate	ND	mg / Kg	24	0.03	1	07/31/00
X00276	XG.2000.807-4	206-44-0	Fluoranthene	ND	mg / Kg	24	0.03	1	07/31/00
X00276	XG.2000.807-4	86737	Fluorene	ND	mg / Kg	24	0.03	1	07/31/00
X00276	XG.2000.807-4	118-74-1	Hexachlorobenzene	ND	mg / Kg	24	0.03	1	07/31/00
X00276	XG.2000.807-4	87-68-3	Hexachlorobutadiene	ND	mg / Kg	24	0.03	1	07/31/00
X00276	XG.2000.807-4	77-47-4	Hexachlorocyclopentadiene	ND	mg / Kg	24	1.5	1	07/31/00
X00276	XG.2000.807-4	67-72-1	Hexachloroethane	ND	mg / Kg	24	0.03	1	07/31/00
X00276	XG.2000.807-4	193-39-5	Indeno(1,2,3-cd)pyrene	ND	mg / Kg	24	0.3	1	07/31/00
X00276	XG.2000.807-4	78-59-1	Isophorone	ND	mg / Kg	24	0.03	1	07/31/00
X00276	XG.2000.807-4	621-64-7	n-Nitroso-di-n-propylamine	ND	mg / Kg	24	0.03	1	07/31/00
X00276	XG.2000.807-4	62-75-9	n-Nitroso-dimethyl-amine	ND	mg / Kg	24	0.3	1	07/31/00
X00276	XG.2000.807-4	86-30-6	n-Nitrosodiphenylamine	ND	mg / Kg	24	0.03	1	07/31/00
X00276	XG.2000.807-4	91-20-3	Naphthalene	100	mg / Kg	24	0.03	1	07/31/00
X00276	XG.2000.807-4	98-95-3	Nitrobenzene	ND	mg / Kg	24	0.03	1	07/31/00

Certificate of Analysis

Client: **CH2M HILL**

Project: **0007231**

X00276	XG.2000.807-4	87-86-5	Pentachlorophenol	ND	mg / Kg	24	0.3	1	07/31/00
X00276	XG.2000.807-4	85-01-8	Phenanthrene	ND	mg / Kg	24	0.03	1	07/31/00
X00276	XG.2000.807-4	108-95-2	Phenol	ND	mg / Kg	24	0.3	1	07/31/00
X00276	XG.2000.807-4	129-00-0	Pyrene	ND	mg / Kg	24	0.03	1	07/31/00
X00276	XG.2000.807-4	110-86-1	Pyridine	ND	mg / Kg	24	0.3	1	07/31/00

0007231-03B **SW846 ME/8015A Diesel Range Organics by GC/FID**

X00272	XG.2000.798-4		Diesel Range Organics	22000	mg / Kg	50	25		07/27/00

SB-26 B/2

Client Sample ID ***ST106 ~~SB23~~ 125'*** Sample Matrix ***SOIL*** Sample Collected ***07/24/00 10:04 00***

QC Group	Run Sequence	CAS #	Analyte	Result	Units	Dilution Factor	Detection Limit	Code	Run Date
0007231-04A		**SW846 5030A/8015A GRO by GC/FID**							
X00273	XG.2000.796-15		Gasoline Range Organics	25000	mg / Kg	10000	0.25		07/26/00
0007231-04A		**SW846 5030A/8021B Purgeable VOCs by GC/PID**							
X00269	XG.2000.794-1	71-43-2	Benzene	6.4	mg / Kg	1000	0.005		07/26/00
X00269	XG.2000.794-1	100-41-4	Ethylbenzene	58	mg / Kg	1000	0.005		07/26/00
X00269	XG.2000.794-1	95-47-6	o-Xylene	51	mg / Kg	1000	0.005		07/26/00
X00255	XG.2000.797-1	108-38-3/106-42	p/m-Xylenes	ND	mg / Kg	100000	0.01		07/27/[illegible]
X00269	XG.2000.794-1	108-88-3	Toluene	34	mg / Kg	1000	0.005		07/26/0[illegible]
0007231-04B		**SW846 ME/8015A Diesel Range Organics by GC/FID**							
X00272	XG.2000.798-5		Diesel Range Organics	27000	mg / Kg	50	25		07/27/00

SB-26 B/2

Client Sample ID ***ST106 ~~SB23~~ 150'*** Sample Matrix ***SOIL*** Sample Collected ***07/24/00 14:48 00***

QC Group	Run Sequence	CAS #	Analyte	Result	Units	Dilution Factor	Detection Limit	Code	Run Date
0007231-05A		**SW846 5030A/8015A GRO by GC/FID**							
X00273	XG.2000.796-16		Gasoline Range Organics	16000	mg / Kg	10000	0.25		07/26/00
0007231-05A		**SW846 8260A Purgeable VOCs by GC/MS**							
X00296	XG.2000.848-8	75-34-3	1,1 Dichloroethane	ND	mg / Kg	1000	0.005	2	08/08/00
X00296	XG.2000.848-8	75-34-3	1,1 Dichloroethene	ND	mg / Kg	1000	0.005	2	08/08/00
X00296	XG.2000.848-8	71-55-6	1,1,1 Trichloroethane	ND	mg / Kg	1000	0.005	2	08/08/00
X00296	XG.2000.848-8	630-20-6	1,1,1,2 Tetrachloroethane	ND	mg / Kg	1000	0.005	2	08/08/00
X00296	XG.2000.848-8	79-00-5	1,1,2 Trichloroethane	ND	mg / Kg	1000	0.005	2	08/08/00
X00296	XG.2000.848-8	79-34-5	1,1,2,2 Tetrachloroethane	ND	mg / Kg	1000	0.005	2	08/08/00
X00296	XG.2000.848-8	106-93-4	1,2 Dibromoethane (EDB)	ND	mg / Kg	1000	0.005	2	08/08/00
X00296	XG.2000.848-8	95-50-1	1,2 Dichlorobenzene	ND	mg / Kg	1000	0.005	2	08/08/00
X00296	XG.2000.848-8	107-06-2	1,2 Dichloroethane	ND	mg / Kg	1000	0.005	2	08/08/00
X00296	XG.2000.848-8	78-87-5	1,2 Dichloropropane	ND	mg / Kg	1000	0.005	2	08/08[illegible]

Certificate of Analysis

t: **CH2M HILL**
Project: **0007231**

X00296	XG.2000.848-8	96-18-4	1,2,3 Trichloropropane	ND	mg / Kg	1000	0.005	2	08/08/00
X00296	XG.2000.848-8	95-63-6	1,2,4-Trimethylbenzene	81	mg / Kg	1000	0.005	2	08/08/00
X00296	XG.2000.848-8	541-73-1	1,3 Dichlorobenzene	ND	mg / Kg	1000	0.005	2	08/08/00
X00296	XG.2000.848-8	108-67-8	1,3,5-Trimethylbenzene	28	mg / Kg	1000	0.005	2	08/08/00
X00296	XG.2000.848-8	764-41-0	1,4 Dichloro-2-butene	ND	mg / Kg	1000	0.05	2	08/08/00
X00296	XG.2000.848-8	106-46-7	1,4 Dichlorobenzene	ND	mg / Kg	1000	0.005	2	08/08/00
X00296	XG.2000.848-8	78-93-3	2-Butanone (MEK)	ND	mg / Kg	1000	0.025	2	08/08/00
X00296	XG.2000.848-8	110-75-8	2-Chloroethylvinylether	ND	mg / Kg	1000	0.025	2	08/08/00
X00296	XG.2000.848-8	591-78-6	2-Hexanone (MBK)	ND	mg / Kg	1000	0.025	2	08/08/00
X00296	XG.2000.848-8	108-10-1	4-Methyl-2-pentanone (MIBK)	ND	mg / Kg	1000	0.025	2	08/08/00
X00296	XG.2000.858-1	67-64-1	Acetone	120	mg / Kg	1000	0.05	2	08/08/00
X00296	XG.2000.848-8	107-02-8	Acrolein	ND	mg / Kg	1000	0.1	2	08/08/00
X00296	XG.2000.848-8	107-13-1	Acrylonitrile	ND	mg / Kg	1000	0.1	2	08/08/00
X00296	XG.2000.848-8	71-43-2	Benzene	21	mg / Kg	1000	0.005	2	08/08/00
X00296	XG.2000.848-8	75-27-4	Bromodichloromethane	ND	mg / Kg	1000	0.005	2	08/08/00
X00296	XG.2000.848-8	75-25-2	Bromoform	ND	mg / Kg	1000	0.005	2	08/08/00
X00296	XG.2000.848-8	74-83-9	Bromomethane	ND	mg / Kg	1000	0.025	2	08/08/00
X00296	XG.2000.848-8	75-15-0	Carbon disulfide	ND	mg / Kg	1000	0.025	2	08/08/00
X00296	XG.2000.848-8	56-23-5	Carbon tetrachloride	ND	mg / Kg	1000	0.005	2	08/08/00
X00296	XG.2000.848-8	108-90-7	Chlorobenzene	ND	mg / Kg	1000	0.005	2	08/08/00
X00296	XG.2000.848-8	124-48-1	Chlorodibromomethane	ND	mg / Kg	1000	0.005	2	08/08/00
X00296	XG.2000.848-8	75-00-3	Chloroethane	ND	mg / Kg	1000	0.025	2	08/08/00
X00296	XG.2000.848-8	67-66-3	Chloroform	ND	mg / Kg	1000	0.005	2	08/08/00
X00296	XG.2000.848-8	74-87-3	Chloromethane	ND	mg / Kg	1000	0.025	2	08/08/00
X00296	XG.2000.848-8	156-59-2	cis-1,2 dichloroethene	ND	mg / Kg	1000	0.005	2	08/08/00
X00296	XG.2000.848-8	10061-01-5	cis-1,3 dichloropropene	ND	mg / Kg	1000	0.005	2	08/08/00
X00296	XG.2000.848-8	74-95-3	Dibromomethane	ND	mg / Kg	1000	0.005	2	08/08/00
X00296	XG.2000.848-8	97-63-2	Ethyl methacrylate	ND	mg / Kg	1000	0.025	2	08/08/00
X00296	XG.2000.848-8	100-41-4	Ethylbenzene	45	mg / Kg	1000	0.005	2	08/08/00
X00296	XG.2000.848-8		Freon 113	ND	mg / Kg	1000	0.025	2	08/08/00
X00296	XG.2000.848-8	75-71-8	Freon 12	ND	mg / Kg	1000	0.05	2	08/08/00
X00296	XG.2000.848-8	74-88-4	Iodomethane	ND	mg / Kg	1000	0.025	2	08/08/00
X00296	XG.2000.848-8	1634-04-4	Methyl t-butyl ether (MTBE)	ND	mg / Kg	1000	0.005	2	08/08/00
X00296	XG.2000.848-8	75-09-2	Methylene chloride	ND	mg / Kg	1000	0.05	2	08/08/00
X00296	XG.2000.848-8	91-20-3	Naphthalene	ND	mg / Kg	1000	0.025	2	08/08/00
X00296	XG.2000.848-8	95-47-6	o-Xylene	55	mg / Kg	1000	0.005	2	08/08/00
X00296	XG.2000.848-8	108-38-3/106-42	p/m Xylenes	160	mg / Kg	1000	0.01	2	08/08/00
X00296	XG.2000.848-8	100-42-5	Styrene	ND	mg / Kg	1000	0.005	2	08/08/00
X00296	XG.2000.848-8	156-60-5	t-1,2 Dichloroethene	ND	mg / Kg	1000	0.005	2	08/08/00
X00296	XG.2000.848-8	10061-02-6	t-1,3 Dichloropropene	ND	mg / Kg	1000	0.005	2	08/08/00
X00296	XG.2000.848-8	127-18-4	Tetrachloroethene	ND	mg / Kg	1000	0.005	2	08/08/00
X00296	XG.2000.848-8	108-88-3	Toluene	150	mg / Kg	1000	0.005	2	08/08/00
X00296	XG.2000.848-8	79-01-6	Trichloroethene	ND	mg / Kg	1000	0.005	2	08/08/00
X00296	XG.2000.848-8	75-69-4	Trichlorofluoromethane	ND	mg / Kg	1000	0.025	2	08/08/00
X00296	XG.2000.848-8	108-05-4	Vinyl acetate	ND	mg / Kg	1000	0.025	2	08/08/00
X00296	XG.2000.848-8	75-01-4	Vinyl chloride	ND	mg / Kg	1000	0.025	2	08/08/00

Certificate of Analysis

Client: **CH2M HILL**

Project: **0007231**

0007231-05B **SW846 ME/8015A Diesel Range Organics by GC/FID**

X00272	XG.2000.798-6		Diesel Range Organics	5500	mg / Kg	10	25		07/27/0(

**** Sample specific Detection Limit is determined by multiplying the sample Dilution Factor by the listed Reporting Detection Limit. ****

**** ND = Not detected: less than the sample specific Detection Limit. Results relate only to the items tested. ****

footnote

1 Some of the surrogate recoveries were out of criteria, suggesting matrix interference problems. This should be taken into account when reviewing the data.

2 Sample was received with headspace.

AS...GAI ANALYTICAL LABORATORIES, INC.

Chain of Custody Record

Lab job No.: 7231 Date 7/25

Page 1 of

7300 JEFFERS... E.
ALBUQUERQUE, NEW...ICO 8710...
(505) 345-8964

3332 WEDGEWOOD
EL PASO, TEXAS 79925
(915) 593-6000

127 EASTGATE DRIVE, 212-C
LOS ALAMOS, NEW MEXICO 87544
(505) 662-2558

Client: CH2M HILL

Address:

City / State / Zip:

Project Name / Number:

Contract / Purchase Order / Quote:

Project Manager / Contact: S. MINCHAK

Telephone No.: 884-5600

Fax No.: 883 7507

Samplers: (signature) Wm LeFevre

Analysis Required

AAL Fraction Number	Field Sample Number / Location	Date	Time	Sample Type	Type / Size of Container	Preservation Temp.	Preservation Chemical	No. of Containers	8020	~~DRO~~ ~~NON-TAT~~	BTEX	VOC	SVOC					Remarks
1A, 1B	STOCK SB23 45'	7/21	1135	Soil	2 x 4oz VOA	ICE	NONE	2	X	X		X						PID Field Screen 1400 ppm VOC
2A, 2B	STOCK SB23 75'	7/21	1315	Soil	2 x 4oz VOA	ICE	NONE	2	X	X	X							1787 ppm VOC
[illegible]	STOCK SB22 100'	7/24	0820	Soil	2 x 4oz VOA	ICE	NONE	2	X	X		X	X					[illegible]
[illegible]	STOCK SB23 125'	7/24	1004	Soil	2 x 4oz VOA	ICE	NONE	2	X	X	X							150 ppm VOC
[illegible]	STOCK SB23 150'	7/24	1148	Soil	2 x 4oz VOA	ICE	NONE	2	X	X		X						[illegible]

Relinquished by:	Date	Received by:	Relinquished by:	Date	Received by:
Signature: Wm LeFevre	7/25	Signature: [illegible]	Signature:		Signature:
Printed: Wm. D. LeFevre	Time 10:35	Printed: [illegible]	Printed:	Time	Printed:
Company: CH2M HILL		Company: [illegible]	Company:		Company:
Reason: XFER TO LAB		Reason: [illegible]	Reason:		Reason:

Method of Shipment: DROP off

Shipment No.

Special Instructions:

Comments: All SAMPLES Very hot in TPH, see comments for field screening results (which, as you know are only very general & not necessarily correlat. w/ lab results). Last time 2000 ppm VOC field screen yielded 50,000 ppm TPH lab result. You've been warned

After analysis, samples are to be:

- ❑ Disposed of (additional fee)
- ❑ Stored (30 days max)
- ❑ Stored over 30 days (additional fee)
- ❑ Returned to customer

COURIER

ASSAIGAI ANALYTICAL LABORATORIES, INC.
7300 Jefferson, NE • Albuquerque, New Mexico 87109 • (505) 345-8964 • FAX (505) 345-7259
3332 Wedgewood Dr., Suite N • El Paso, Texas 79925 • (915) 593-6000 • FAX (915) 593-7820
127 Eastgate Drive, 212-C • Los Alamos, New Mexico 87544 • (505) 662-2558

RECEIVED SEP 11 2000

Explanation of codes

B	analyte detected in Method Blank
E	result is estimated
H	analyzed out of hold time
N	tentatively identified compound
S	subcontracted
1-9	see footnote

CH2M HILL
attn: SHARON MINCHAK
6001 INDIAN SCHOOL RD NE STE 350
ALBUQUERQUE, NM 87110-4140

Assaigai Analytical Laboratories, Inc.

Certificate of Analysis

Client: CH2M HILL
Project: 0008017 KAFB

for William P. Biava: President of Assaigai Analytical Laboratories, Inc.

SB-26 B/2

Client Sample ID: ST106 ~~SB23~~ 175 — Sample Matrix: SOIL — Sample Collected: 07/31/00 14:00:00

QC Group	Run Sequence	CAS #	Analyte	Result	Units	Dilution Factor	Detection Limit	Code	Run Date
0008017-01A		SW846 5030A/8015A GRO by GC/FID							
X00273	XG.2000.815-14		Gasoline Range Organics	3100	mg / Kg	10000	0.25	1	08/03/00
0008017-01A		SW846 5030A/8021B Purgeable VOCs by GC/PID							
X00286	XG.2000.819-4	71-43-2	Benzene	ND	mg / Kg	50	0.005	1	08/03/00
X00286	XG.2000.819-4	100-41-4	Ethylbenzene	2.0	mg / Kg	50	0.005	1	08/03/00
X00286	XG.2000.819-4	95-47-6	o-Xylene	5.0	mg / Kg	50	0.005	1	08/03/00
X00286	XG.2000.819-4	108-38-3/106-42	p/m-Xylenes	12	mg / Kg	50	0.01	1	08/03/00
X00286	XG.2000.819-4	108-88-3	Toluene	0.49	mg / Kg	50	0.005	1	08/03/00
0008017-01B		SW846 ME/8015A Diesel Range Organics by GC/FID							
X00272	XG.2000.823-10		Diesel Range Organics	4300	mg / Kg	10	25		08/04/00

SB-26 B/2

Client Sample ID: ST106 ~~SB23~~ 200 — Sample Matrix: SOIL — Sample Collected: 07/31/00 17:00:00

QC Group	Run Sequence	CAS #	Analyte	Result	Units	Dilution Factor	Detection Limit	Code	Run Date
0008017-02A		SW846 5030A/8015A GRO by GC/FID							
X00273	XG.2000.815-15		Gasoline Range Organics	14000	mg / Kg	10000	0.25	1	08/03/00

Member American Council of Independent Laboratories, Inc.

REPRODUCTION OF THIS REPORT IN LESS THAN FULL REQUIRES THE WRITTEN CONSENT OF AAL.
THIS REPORT MAY NOT BE USED IN ANY MANNER BY THE CLIENT OR ANY OTHER THIRD PARTY TO CLAIM PRODUCT ENDORSEMENT BY ANY ACCREDITATION PROGRAM

Certificate of Analysis

Client: **CH2M HILL**

Project: **0008017** **KAFB**

0008017-02A SW846 8260A Purgeable VOCs by GC/MS

X00296	XG.2000.848-11	75-34-3	1,1 Dichloroethane	ND	mg / Kg	1000	0.005	1	08/08/0
X00296	XG.2000.848-11	75-34-3	1,1 Dichloroethene	ND	mg / Kg	1000	0.005	1	08/08/0
X00296	XG.2000.848-11	71-55-6	1,1,1 Trichloroethane	ND	mg / Kg	1000	0.005	1	08/08/0
X00296	XG.2000.848-11	630-20-6	1,1,1,2 Tetrachloroethane	ND	mg / Kg	1000	0.005	1	08/08/0
X00296	XG.2000.848-11	79-00-5	1,1,2 Trichloroethane	ND	mg / Kg	1000	0.005	1	08/08/0
X00296	XG.2000.848-11	79-34-5	1,1,2,2 Tetrachloroethane	ND	mg / Kg	1000	0.005	1	08/08/0
X00296	XG.2000.848-11	106-93-4	1,2 Dibromoethane (EDB)	ND	mg / Kg	1000	0.005	1	08/08/0
X00296	XG.2000.848-11	95-50-1	1,2 Dichlorobenzene	ND	mg / Kg	1000	0.005	1	08/08/0
X00296	XG.2000.848-11	107-06-2	1,2 Dichloroethane	ND	mg / Kg	1000	0.005	1	08/08/0
X00296	XG.2000.848-11	78-87-5	1,2 Dichloropropane	ND	mg / Kg	1000	0.005	1	08/08/0
X00296	XG.2000.848-11	96-18-4	1,2,3 Trichloropropane	ND	mg / Kg	1000	0.005	1	08/08/0
X00296	XG.2000.848-11	95-63-6	1,2,4-Trimethylbenzene	130	mg / Kg	1000	0.005	1	08/08/0
X00296	XG.2000.848-11	541-73-1	1,3 Dichlorobenzene	ND	mg / Kg	1000	0.005	1	08/08/0
X00296	XG.2000.848-11	108-67-8	1,3,5-Trimethylbenzene	38	mg / Kg	1000	0.005	1	08/08/0
X00296	XG.2000.848-11	764-41-0	1,4 Dichloro-2-butene	ND	mg / Kg	1000	0.05	1	08/08/0
X00296	XG.2000.848-11	106-46-7	1,4 Dichlorobenzene	ND	mg / Kg	1000	0.005	1	08/08/0
X00296	XG.2000.848-11	78-93-3	2-Butanone (MEK)	ND	mg / Kg	1000	0.025	1	08/08/0
X00296	XG.2000.848-11	110-75-8	2-Chloroethylvinylether	ND	mg / Kg	1000	0.025	1	08/08/0
X00296	XG.2000.848-11	591-78-6	2-Hexanone (MBK)	ND	mg / Kg	1000	0.025	1	08/08/0
X00296	XG.2000.848-11	108-10-1	4-Methyl-2-pentanone (MIBK)	ND	mg / Kg	1000	0.025	1	08/08/0
X00296	XG.2000.858-2	67-64-1	Acetone	120	mg / Kg	1000	0.05	1	08/08/0
X00296	XG.2000.848-11	107-02-8	Acrolein	ND	mg / Kg	1000	0.1	1	08/0
X00296	XG.2000.848-11	107-13-1	Acrylonitrile	ND	mg / Kg	1000	0.1	1	08/08/0
X00296	XG.2000.848-11	71-43-2	Benzene	19	mg / Kg	1000	0.005	1	08/08/0
X00296	XG.2000.848-11	75-27-4	Bromodichloromethane	ND	mg / Kg	1000	0.005	1	08/08/0
X00296	XG.2000.848-11	75-25-2	Bromoform	ND	mg / Kg	1000	0.005	1	08/08/0
X00296	XG.2000.848-11	74-83-9	Bromomethane	ND	mg / Kg	1000	0.025	1	08/08/0
X00296	XG.2000.848-11	75-15-0	Carbon disulfide	ND	mg / Kg	1000	0.025	1	08/08/0
X00296	XG.2000.848-11	56-23-5	Carbon tetrachloride	ND	mg / Kg	1000	0.005	1	08/08/0
X00296	XG.2000.848-11	108-90-7	Chlorobenzene	ND	mg / Kg	1000	0.005	1	08/08/0
X00296	XG.2000.848-11	124-48-1	Chlorodibromomethane	ND	mg / Kg	1000	0.005	1	08/08/0
X00296	XG.2000.848-11	75-00-3	Chloroethane	ND	mg / Kg	1000	0.025	1	08/08/0
X00296	XG.2000.848-11	67-66-3	Chloroform	ND	mg / Kg	1000	0.005	1	08/08/0
X00296	XG.2000.848-11	74-87-3	Chloromethane	ND	mg / Kg	1000	0.025	1	08/08/0
X00296	XG.2000.848-11	156-59-2	cis-1,2 dichloroethene	ND	mg / Kg	1000	0.005	1	08/08/0
X00296	XG.2000.848-11	10061-01-5	cis-1,3 dichloropropene	ND	mg / Kg	1000	0.005	1	08/08/0
X00296	XG.2000.848-11	74-95-3	Dibromomethane	ND	mg / Kg	1000	0.005	1	08/08/0
X00296	XG.2000.848-11	97-63-2	Ethyl methacrylate	ND	mg / Kg	1000	0.025	1	08/08/0
X00296	XG.2000.848-11	100-41-4	Ethylbenzene	35	mg / Kg	1000	0.005	1	08/08/0
X00296	XG.2000.848-11		Freon 113	ND	mg / Kg	1000	0.025	1	08/08/0
X00296	XG.2000.848-11	75-71-8	Freon 12	ND	mg / Kg	1000	0.05	1	08/08/0
X00296	XG.2000.848-11	74-88-4	Iodomethane	ND	mg / Kg	1000	0.025	1	08/08/0
X00296	XG.2000.848-11	1634-04-4	Methyl t-butyl ether (MTBE)	ND	mg / Kg	1000	0.005	1	08/08/0
X00296	XG.2000.848-11	75-09-2	Methylene chloride	ND	mg / Kg	1000	0.05	1	08/08/0
X00296	XG.2000.848-11	91-20-3	Naphthalene	43	mg / Kg	1000	0.025	1	08/08/0
X00296	XG.2000.848-11	95-47-6	o-Xylene	45	mg / Kg	1000	0.005	1	08/08/0
X00296	XG.2000.848-11	108-38-3/106-42	p/m Xylenes	130	mg / Kg	1000	0.01	1	08/08/0

Certificate of Analysis

t: **CH2M HILL**

Project: **0008017** **KAFB**

X00296	XG.2000.848-11	100-42-5	Styrene	ND	mg / Kg	1000	0.005	1	08/08/00
X00296	XG.2000.848-11	156-60-5	t-1,2 Dichloroethene	ND	mg / Kg	1000	0.005	1	08/08/00
X00296	XG.2000.848-11	10061-02-6	t-1,3 Dichloropropene	ND	mg / Kg	1000	0.005	1	08/08/00
X00296	XG.2000.848-11	127-18-4	Tetrachloroethene	ND	mg / Kg	1000	0.005	1	08/08/00
X00296	XG.2000.848-11	108-88-3	Toluene	130	mg / Kg	1000	0.005	1	08/08/00
X00296	XG.2000.848-11	79-01-6	Trichloroethene	ND	mg / Kg	1000	0.005	1	08/08/00
X00296	XG.2000.848-11	75-69-4	Trichlorofluoromethane	ND	mg / Kg	1000	0.025	1	08/08/00
X00296	XG.2000.848-11	108-05-4	Vinyl acetate	ND	mg / Kg	1000	0.025	1	08/08/00
X00296	XG.2000.848-11	75-01-4	Vinyl chloride	ND	mg / Kg	1000	0.025	1	08/08/00

0008017-02B **SW846 3550A/8270B SVOCs by GC/MS**

X00276	XG.2000.899-2	120-82-1	1,2,4-Trichlorobenzene	ND	mg / Kg	20	0.03		08/21/00
X00276	XG.2000.899-2	95-50-1	1,2-Dichlorobenzene	ND	mg / Kg	20	0.03		08/21/00
X00276	XG.2000.899-2	541-73-1	1,3-Dichlorobenzene	ND	mg / Kg	20	0.03		08/21/00
X00276	XG.2000.899-2	106-46-7	1,4-Dichlorobenzene	ND	mg / Kg	20	0.03		08/21/00
X00276	XG.2000.899-2	90-12-0	1-Methylnaphthalene	66	mg / Kg	20	0.03		08/21/00
X00276	XG.2000.899-2	58-90-2	2,3,4,6-Tetrachlorophenol	ND	mg / Kg	20	1.5		08/21/00
X00276	XG.2000.899-2	95-95-4	2,4,5-Trichlorophenol	ND	mg / Kg	20	0.3		08/21/00
X00276	XG.2000.899-2	88-06-2	2,4,6-Trichlorophenol	ND	mg / Kg	20	0.3		08/21/00
X00276	XG.2000.899-2	120-83-2	2,4-Dichlorophenol	ND	mg / Kg	20	0.3		08/21/00
X00276	XG.2000.899-2	105-67-9	2,4-Dimethylphenol	ND	mg / Kg	20	0.03		08/21/00
X00276	XG.2000.899-2	51-28-5	2,4-Dinitrophenol	ND	mg / Kg	20	0.67		08/21/00
[illegible]76	XG.2000.899-2	121-14-2	2,4-Dinitrotoluene	ND	mg / Kg	20	0.3		08/21/00
[illegible]76	XG.2000.899-2	606-20-2	2,6-Dinitrotoluene	ND	mg / Kg	20	0.3		08/21/00
X00276	XG.2000.899-2	91-58-7	2-Chloronaphthalene	ND	mg / Kg	20	0.03		08/21/00
X00276	XG.2000.899-2	95-57-8	2-Chlorophenol	ND	mg / Kg	20	0.03		08/21/00
X00276	XG.2000.899-2	91-57-6	2-Methylnaphthalene	91	mg / Kg	20	0.03		08/21/00
X00276	XG.2000.899-2	95-48-7	2-Methylphenol	ND	mg / Kg	20	0.03		08/21/00
X00276	XG.2000.899-2	88-74-4	2-Nitroaniline	ND	mg / Kg	20	0.3		08/21/00
X00276	XG.2000.899-2	88-75-5	2-Nitrophenol	ND	mg / Kg	20	0.3		08/21/00
X00276	XG.2000.899-2		3+4 Methylphenol	ND	mg / Kg	20	0.03		08/21/00
X00276	XG.2000.899-2	91-94-1	3,3-Dichlorobenzidine	ND	mg / Kg	20	0.3		08/21/00
X00276	XG.2000.899-2	99-09-2	3-Nitroaniline	ND	mg / Kg	20	0.3		08/21/00
X00276	XG.2000.899-2	534-52-1	4,6-Dinitro-2-methylphenol	ND	mg / Kg	20	0.3		08/21/00
X00276	XG.2000.899-2	101-55-3	4-Bromophenyl-phenylether	ND	mg / Kg	20	0.03		08/21/00
X00276	XG.2000.899-2	59-50-7	4-Chloro-3-methylphenol	ND	mg / Kg	20	0.3		08/21/00
X00276	XG.2000.899-2	106-47-8	4-Chloroaniline	ND	mg / Kg	20	0.3		08/21/00
X00276	XG.2000.899-2	7005-72-3	4-Chlorophenyl-phenylether	ND	mg / Kg	20	0.03		08/21/00
X00276	XG.2000.899-2	100-01-6	4-Nitroaniline	ND	mg / Kg	20	0.3		08/21/00
X00276	XG.2000.899-2	100-02-7	4-Nitrophenol	ND	mg / Kg	20	0.6		08/21/00
X00276	XG.2000.899-2	83-32-9	Acenaphthene	ND	mg / Kg	20	0.03		08/21/00
X00276	XG.2000.899-2	208-96-8	Acenaphthylene	ND	mg / Kg	20	0.03		08/21/00
X00276	XG.2000.899-2	62-53-3	Aniline	ND	mg / Kg	20	0.3		08/21/00
X00276	XG.2000.899-2	120-12-7	Anthracene	ND	mg / Kg	20	0.03		08/21/00
X00276	XG.2000.899-2		Azobenzene&1,2-Diphenylhydrazine	ND	mg / Kg	20	0.03		08/21/00
X00276	XG.2000.899-2	56-55-3	Benzo (a) anthracene	ND	mg / Kg	20	0.03		08/21/00
X00276	XG.2000.899-2	50-32-8	Benzo(a)pyrene	ND	mg / Kg	20	0.03		08/21/00
[illegible]76	XG.2000.899-2		Benzo(b & k)fluoranthene	ND	mg / Kg	20	0.03		08/21/00

Certificate of Analysis

Client: **CH2M HILL**

Project: **0008017** **KAFB**

X00276	XG.2000.899-2	191-24-2	Benzo(g,h,i)perylene	ND	mg / Kg	20	0.3		08/21/00
X00276	XG.2000.899-2	64-85-0	Benzoic acid	ND	mg / Kg	20	3		08/21/00
X00276	XG.2000.899-2	100-51-6	Benzyl alcohol	ND	mg / Kg	20	1.5		08/21/00
X00276	XG.2000.899-2	111-44-4	bis (2-Chloroethyl) ether	ND	mg / Kg	20	0.03		08/21/00
X00276	XG.2000.899-2	111-91-1	bis(2-Chloroethoxy)methane	ND	mg / Kg	20	0.03		08/21/00
X00276	XG.2000.899-2	108-60-1	bis(2-Chloroisopropyl)ether	ND	mg / Kg	20	0.03		08/21/00
X00276	XG.2000.899-2	117-81-7	bis(2-Ethylhexyl)phthalate	ND	mg / Kg	20	0.3		08/21/00
X00276	XG.2000.899-2	85-68-7	Butylbenzylphthalate	ND	mg / Kg	20	0.03		08/21/00
X00276	XG.2000.899-2	218-01-9	Chrysene	ND	mg / Kg	20	0.03		08/21/00
X00276	XG.2000.899-2	84-74-2	di-n-Butylphthalate	ND	mg / Kg	20	0.3		08/21/00
X00276	XG.2000.899-2	117-84-0	di-n-Octylpthalate	ND	mg / Kg	20	0.3		08/21/00
X00276	XG.2000.899-2	53-70-3	Dibenz(a,h)anthracene	ND	mg / Kg	20	0.3		08/21/00
X00276	XG.2000.899-2	132-64-9	Dibenzofuran	ND	mg / Kg	20	0.03		08/21/00
X00276	XG.2000.899-2	84-66-2	Diethylphthalate	ND	mg / Kg	20	0.03		08/21/00
X00276	XG.2000.899-2	131-11-3	Dimethylphthalate	ND	mg / Kg	20	0.03		08/21/00
X00276	XG.2000.899-2	206-44-0	Fluoranthene	ND	mg / Kg	20	0.03		08/21/00
X00276	XG.2000.899-2	86737	Fluorene	ND	mg / Kg	20	0.03		08/21/00
X00276	XG.2000.899-2	118-74-1	Hexachlorobenzene	ND	mg / Kg	20	0.03		08/21/00
X00276	XG.2000.899-2	87-68-3	Hexachlorobutadiene	ND	mg / Kg	20	0.03		08/21/00
X00276	XG.2000.899-2	77-47-4	Hexachlorocyclopentadiene	ND	mg / Kg	20	1.5		08/21/00
X00276	XG.2000.899-2	67-72-1	Hexachloroethane	ND	mg / Kg	20	0.03		08/21/00
X00276	XG.2000.899-2	193-39-5	Indeno(1,2,3-cd)pyrene	ND	mg / Kg	20	0.3		08/21/00
X00276	XG.2000.899-2	78-59-1	Isophorone	ND	mg / Kg	20	0.03		08/21/00
X00276	XG.2000.899-2	621-64-7	n-Nitroso-di-n-propylamine	ND	mg / Kg	20	0.03		08/21/
X00276	XG.2000.899-2	62-75-9	n-Nitroso-dimethyl-amine	15	mg / Kg	20	0.3		08/21/00
X00276	XG.2000.899-2	86-30-6	n-Nitrosodiphenylamine	ND	mg / Kg	20	0.03		08/21/00
X00276	XG.2000.899-2	91-20-3	Naphthalene	52	mg / Kg	20	0.03		08/21/00
X00276	XG.2000.899-2	98-95-3	Nitrobenzene	ND	mg / Kg	20	0.03		08/21/00
X00276	XG.2000.899-2	87-86-5	Pentachlorophenol	ND	mg / Kg	20	0.3		08/21/00
X00276	XG.2000.899-2	85-01-8	Phenanthrene	ND	mg / Kg	20	0.03		08/21/00
X00276	XG.2000.899-2	108-95-2	Phenol	ND	mg / Kg	20	0.3		08/21/00
X00276	XG.2000.899-2	129-00-0	Pyrene	ND	mg / Kg	20	0.03		08/21/00
X00276	XG.2000.899-2	110-86-1	Pyridine	ND	mg / Kg	20	0.3		08/21/00

0008017-02B **SW846 ME/8015A Diesel Range Organics by GC/FID**

X00272	XG.2000.823-24		Diesel Range Organics	17000	mg / Kg	50	25		08/04/00

Client Sample ID ***ST106 FIELD DUP 1*** Sample Matrix ***SOIL*** Sample Collected *07/31/00 14:00:00*

QC Group	Run Sequence	CAS #	Analyte	Result	Units	Dilution Factor	Detection Limit	Code	Run Date
0008017-03A		**SW846 5030A/8015A GRO by GC/FID**							
X00273	XG.2000.815-16		Gasoline Range Organics	5000	mg / Kg	10000	0.25	1	08/03/00
0008017-03A		**SW846 5030A/8021B Purgeable VOCs by GC/PID**							
X00286	XG.2000.819-7	71-43-2	Benzene	ND	mg / Kg	500	0.005	1	08/03/00
X00286	XG.2000.819-7	100-41-4	Ethylbenzene	33	mg / Kg	500	0.005	1	08/03/

Certificate of Analysis

t: **CH2M HILL**

Project: **0008017** **KAFB**

X00286	XG.2000.819-7	95-47-6	o-Xylene	48	mg / Kg	500	0.005	1	08/03/00
X00286	XG.2000.819-7	108-38-3/106-42	p/m-Xylenes	160	mg / Kg	500	0.01	1	08/03/00
X00286	XG.2000.819-7	108-88-3	Toluene	28	mg / Kg	500	0.005	1	08/03/00

0008017-03B **SW846 ME/8015A Diesel Range Organics by GC/FID**

X00272	XG.2000.823-11		Diesel Range Organics	3300	mg / Kg	10	25		08/04/00

Client Sample ID ***ST106 FIELD DUP 5*** Sample Matrix ***SOIL*** Sample Collected ***07/31/00 17:00:00***

0008017-04A **SW846 5030A/8015A GRO by GC/FID**

QC Group	Run Sequence	CAS #	Analyte	Result	Units	Dilution Factor	Detection Limit	Code	Run Date
X00273	XG.2000.815-17		Gasoline Range Organics	14000	mg / Kg	10000	0.25	1	08/03/00

0008017-04A **SW846 8260A Purgeable VOCs by GC/MS**

X00296	XG.2000.848-12	75-34-3	1,1 Dichloroethane	ND	mg / Kg	1000	0.005	1	08/08/00
X00296	XG.2000.848-12	75-34-3	1,1 Dichloroethene	ND	mg / Kg	1000	0.005	1	08/08/00
X00296	XG.2000.848-12	71-55-6	1,1,1 Trichloroethane	ND	mg / Kg	1000	0.005	1	08/08/00
X00296	XG.2000.848-12	630-20-6	1,1,1,2 Tetrachloroethane	ND	mg / Kg	1000	0.005	1	08/08/00
X00296	XG.2000.848-12	79-00-5	1,1,2 Trichloroethane	ND	mg / Kg	1000	0.005	1	08/08/00
[illegible]	XG.2000.848-12	79-34-5	1,1,2,2 Tetrachloroethane	ND	mg / Kg	1000	0.005	1	08/08/00
X00296	XG.2000.848-12	106-93-4	1,2 Dibromoethane (EDB)	ND	mg / Kg	1000	0.005	1	08/08/00
X00296	XG.2000.848-12	95-50-1	1,2 Dichlorobenzene	ND	mg / Kg	1000	0.005	1	08/08/00
X00296	XG.2000.848-12	107-06-2	1,2 Dichloroethane	ND	mg / Kg	1000	0.005	1	08/08/00
X00296	XG.2000.848-12	78-87-5	1,2 Dichloropropane	ND	mg / Kg	1000	0.005	1	08/08/00
X00296	XG.2000.848-12	96-18-4	1,2,3 Trichloropropane	ND	mg / Kg	1000	0.005	1	08/08/00
X00296	XG.2000.848-12	95-63-6	1,2,4-Trimethylbenzene	120	mg / Kg	1000	0.005	1	08/08/00
X00296	XG.2000.848-12	541-73-1	1,3 Dichlorobenzene	ND	mg / Kg	1000	0.005	1	08/08/00
X00296	XG.2000.848-12	108-67-8	1,3,5-Trimethylbenzene	33	mg / Kg	1000	0.005	1	08/08/00
X00296	XG.2000.848-12	764-41-0	1,4 Dichloro-2-butene	ND	mg / Kg	1000	0.05	1	08/08/00
X00296	XG.2000.848-12	106-46-7	1,4 Dichlorobenzene	ND	mg / Kg	1000	0.005	1	08/08/00
X00296	XG.2000.848-12	78-93-3	2-Butanone (MEK)	ND	mg / Kg	1000	0.025	1	08/08/00
X00296	XG.2000.848-12	110-75-8	2-Chloroethylvinylether	ND	mg / Kg	1000	0.025	1	08/08/00
X00296	XG.2000.848-12	591-78-6	2-Hexanone (MBK)	ND	mg / Kg	1000	0.025	1	08/08/00
X00296	XG.2000.848-12	108-10-1	4-Methyl-2-pentanone (MIBK)	ND	mg / Kg	1000	0.025	1	08/08/00
X00296	XG.2000.858-3	67-64-1	Acetone	170	mg / Kg	1000	0.05	1	08/08/00
X00296	XG.2000.848-12	107-02-8	Acrolein	ND	mg / Kg	1000	0.1	1	08/08/00
X00296	XG.2000.848-12	107-13-1	Acrylonitrile	ND	mg / Kg	1000	0.1	1	08/08/00
X00296	XG.2000.848-12	71-43-2	Benzene	13	mg / Kg	1000	0.005	1	08/08/00
X00296	XG.2000.848-12	75-27-4	Bromodichloromethane	ND	mg / Kg	1000	0.005	1	08/08/00
X00296	XG.2000.848-12	75-25-2	Bromoform	ND	mg / Kg	1000	0.005	1	08/08/00
X00296	XG.2000.848-12	74-83-9	Bromomethane	ND	mg / Kg	1000	0.025	1	08/08/00
X00296	XG.2000.848-12	75-15-0	Carbon disulfide	ND	mg / Kg	1000	0.025	1	08/08/00
X00296	XG.2000.848-12	56-23-5	Carbon tetrachloride	ND	mg / Kg	1000	0.005	1	08/08/00
X00296	XG.2000.848-12	108-90-7	Chlorobenzene	ND	mg / Kg	1000	0.005	1	08/08/00
[illegible]96	XG.2000.848-12	124-48-1	Chlorodibromomethane	ND	mg / Kg	1000	0.005	1	08/08/00

Certificate of Analysis

Client: **CH2M HILL**

Project: **0008017** **KAFB**

X00296	XG.2000.848-12	75-00-3	Chloroethane	ND	mg / Kg	1000	0.025	1	08/08/00
X00296	XG.2000.848-12	67-66-3	Chloroform	ND	mg / Kg	1000	0.005	1	08/08/00
X00296	XG.2000.848-12	74-87-3	Chloromethane	ND	mg / Kg	1000	0.025	1	08/08/00
X00296	XG.2000.848-12	156-59-2	cis-1,2 dichloroethene	ND	mg / Kg	1000	0.005	1	08/08/00
X00296	XG.2000.848-12	10061-01-5	cis-1,3 dichloropropene	ND	mg / Kg	1000	0.005	1	08/08/00
X00296	XG.2000.848-12	74-95-3	Dibromomethane	ND	mg / Kg	1000	0.005	1	08/08/00
X00296	XG.2000.848-12	97-63-2	Ethyl methacrylate	ND	mg / Kg	1000	0.025	1	08/08/00
X00296	XG.2000.848-12	100-41-4	Ethylbenzene	31	mg / Kg	1000	0.005	1	08/08/00
X00296	XG.2000.848-12		Freon 113	ND	mg / Kg	1000	0.025	1	08/08/00
X00296	XG.2000.848-12	75-71-8	Freon 12	ND	mg / Kg	1000	0.05	1	08/08/00
X00296	XG.2000.848-12	74-88-4	Iodomethane	ND	mg / Kg	1000	0.025	1	08/08/00
X00296	XG.2000.848-12	1634-04-4	Methyl t-butyl ether (MTBE)	ND	mg / Kg	1000	0.005	1	08/08/00
X00296	XG.2000.848-12	75-09-2	Methylene chloride	ND	mg / Kg	1000	0.05	1	08/08/00
X00296	XG.2000.848-12	91-20-3	Naphthalene	36	mg / Kg	1000	0.025	1	08/08/00
X00296	XG.2000.848-12	95-47-6	o-Xylene	39	mg / Kg	1000	0.005	1	08/08/00
X00296	XG.2000.848-12	108-38-3/106-42	p/m Xylenes	110	mg / Kg	1000	0.01	1	08/08/00
X00296	XG.2000.848-12	100-42-5	Styrene	ND	mg / Kg	1000	0.005	1	08/08/00
X00296	XG.2000.848-12	156-60-5	t-1,2 Dichloroethene	ND	mg / Kg	1000	0.005	1	08/08/00
X00296	XG.2000.848-12	10061-02-6	t-1,3 Dichloropropene	ND	mg / Kg	1000	0.005	1	08/08/00
X00296	XG.2000.848-12	127-18-4	Tetrachloroethene	ND	mg / Kg	1000	0.005	1	08/08/00
X00296	XG.2000.848-12	108-88-3	Toluene	100	mg / Kg	1000	0.005	1	08/08/00
X00296	XG.2000.848-12	79-01-6	Trichloroethene	ND	mg / Kg	1000	0.005	1	08/08/00
X00296	XG.2000.848-12	75-69-4	Trichlorofluoromethane	ND	mg / Kg	1000	0.025	1	08/08
X00296	XG.2000.848-12	108-05-4	Vinyl acetate	ND	mg / Kg	1000	0.025	1	08/08/0
X00296	XG.2000.848-12	75-01-4	Vinyl chloride	ND	mg / Kg	1000	0.025	1	08/08/00

0008017-04B **SW846 3550A/8270B SVOCs by GC/MS**

X00276	XG.2000.899-3	120-82-1	1,2,4-Trichlorobenzene	ND	mg / Kg	20	0.03		08/21/00
X00276	XG.2000.899-3	95-50-1	1,2-Dichlorobenzene	ND	mg / Kg	20	0.03		08/21/00
X00276	XG.2000.899-3	541-73-1	1,3-Dichlorobenzene	ND	mg / Kg	20	0.03		08/21/00
X00276	XG.2000.899-3	106-46-7	1,4-Dichlorobenzene	ND	mg / Kg	20	0.03		08/21/00
X00276	XG.2000.899-3	90-12-0	1-Methylnaphthalene	66	mg / Kg	20	0.03		08/21/00
X00276	XG.2000.899-3	58-90-2	2,3,4,6-Tetrachlorophenol	ND	mg / Kg	20	1.5		08/21/00
X00276	XG.2000.899-3	95-95-4	2,4,5-Trichlorophenol	ND	mg / Kg	20	0.3		08/21/00
X00276	XG.2000.899-3	88-06-2	2,4,6-Trichlorophenol	ND	mg / Kg	20	0.3		08/21/00
X00276	XG.2000.899-3	120-83-2	2,4-Dichlorophenol	ND	mg / Kg	20	0.3		08/21/00
X00276	XG.2000.899-3	105-67-9	2,4-Dimethylphenol	ND	mg / Kg	20	0.03		08/21/00
X00276	XG.2000.899-3	51-28-5	2,4-Dinitrophenol	ND	mg / Kg	20	0.67		08/21/00
X00276	XG.2000.899-3	121-14-2	2,4-Dinitrotoluene	ND	mg / Kg	20	0.3		08/21/00
X00276	XG.2000.899-3	606-20-2	2,6-Dinitrotoluene	ND	mg / Kg	20	0.3		08/21/00
X00276	XG.2000.899-3	91-58-7	2-Chloronaphthalene	ND	mg / Kg	20	0.03		08/21/00
X00276	XG.2000.899-3	95-57-8	2-Chlorophenol	ND	mg / Kg	20	0.03		08/21/00
X00276	XG.2000.899-3	91-57-6	2-Methylnaphthalene	92	mg / Kg	20	0.03		08/21/00
X00276	XG.2000.899-3	95-48-7	2-Methylphenol	ND	mg / Kg	20	0.03		08/21/00
X00276	XG.2000.899-3	88-74-4	2-Nitroaniline	ND	mg / Kg	20	0.3		08/21/00
X00276	XG.2000.899-3	88-75-5	2-Nitrophenol	ND	mg / Kg	20	0.3		08/21/00
X00276	XG.2000.899-3		3+4 Methylphenol	ND	mg / Kg	20	0.03		08/21/00
X00276	XG.2000.899-3	91-94-1	3,3-Dichlorobenzidine	ND	mg / Kg	20	0.3		08/21/0

Certificate of Analysis

Client: CH2M HILL
Project: 0008017 KAFB

X00276	XG.2000.899-3	99-09-2	3-Nitroaniline	ND	mg / Kg	20	0.3		08/21/00
X00276	XG.2000.899-3	534-52-1	4,6-Dinitro-2-methylphenol	ND	mg / Kg	20	0.3		08/21/00
X00276	XG.2000.899-3	101-55-3	4-Bromophenyl-phenylether	ND	mg / Kg	20	0.03		08/21/00
X00276	XG.2000.899-3	59-50-7	4-Chloro-3-methylphenol	ND	mg / Kg	20	0.3		08/21/00
X00276	XG.2000.899-3	106-47-8	4-Chloroaniline	ND	mg / Kg	20	0.3		08/21/00
X00276	XG.2000.899-3	7005-72-3	4-Chlorophenyl-phenylether	ND	mg / Kg	20	0.03		08/21/00
X00276	XG.2000.899-3	100-01-6	4-Nitroaniline	ND	mg / Kg	20	0.3		08/21/00
X00276	XG.2000.899-3	100-02-7	4-Nitrophenol	ND	mg / Kg	20	0.6		08/21/00
X00276	XG.2000.899-3	83-32-9	Acenaphthene	ND	mg / Kg	20	0.03		08/21/00
X00276	XG.2000.899-3	208-96-8	Acenaphthylene	ND	mg / Kg	20	0.03		08/21/00
X00276	XG.2000.899-3	62-53-3	Aniline	ND	mg / Kg	20	0.3		08/21/00
X00276	XG.2000.899-3	120-12-7	Anthracene	ND	mg / Kg	20	0.03		08/21/00
X00276	XG.2000.899-3		Azobenzene&1,2-Diphenylhydrazine	ND	mg / Kg	20	0.03		08/21/00
X00276	XG.2000.899-3	56-55-3	Benzo (a) anthracene	ND	mg / Kg	20	0.03		08/21/00
X00276	XG.2000.899-3	50-32-8	Benzo(a)pyrene	ND	mg / Kg	20	0.03		08/21/00
X00276	XG.2000.899-3		Benzo(b & k)fluoranthene	ND	mg / Kg	20	0.03		08/21/00
X00276	XG.2000.899-3	191-24-2	Benzo(g,h,i)perylene	ND	mg / Kg	20	0.3		08/21/00
X00276	XG.2000.899-3	64-85-0	Benzoic acid	ND	mg / Kg	20	3		08/21/00
X00276	XG.2000.899-3	100-51-6	Benzyl alcohol	ND	mg / Kg	20	1.5		08/21/00
X00276	XG.2000.899-3	111-44-4	bis (2-Chloroethyl) ether	ND	mg / Kg	20	0.03		08/21/00
X00276	XG.2000.899-3	111-91-1	bis(2-Chloroethoxy)methane	ND	mg / Kg	20	0.03		08/21/00
X00276	XG.2000.899-3	108-60-1	bis(2-Chloroisopropyl)ether	ND	mg / Kg	20	0.03		08/21/00
[illegible]	XG.2000.899-3	117-81-7	bis(2-Ethylhexyl)phthalate	ND	mg / Kg	20	0.3		08/21/00
X00276	XG.2000.899-3	85-68-7	Butylbenzylphthalate	ND	mg / Kg	20	0.03		08/21/00
X00276	XG.2000.899-3	218-01-9	Chrysene	ND	mg / Kg	20	0.03		08/21/00
X00276	XG.2000.899-3	84-74-2	di-n-Butylphthalate	ND	mg / Kg	20	0.3		08/21/00
X00276	XG.2000.899-3	117-84-0	di-n-Octylpthalate	ND	mg / Kg	20	0.3		08/21/00
X00276	XG.2000.899-3	53-70-3	Dibenz(a,h)anthracene	ND	mg / Kg	20	0.3		08/21/00
X00276	XG.2000.899-3	132-64-9	Dibenzofuran	ND	mg / Kg	20	0.03		08/21/00
X00276	XG.2000.899-3	84-66-2	Diethylphthalate	ND	mg / Kg	20	0.03		08/21/00
X00276	XG.2000.899-3	131-11-3	Dimethylphthalate	ND	mg / Kg	20	0.03		08/21/00
X00276	XG.2000.899-3	206-44-0	Fluoranthene	ND	mg / Kg	20	0.03		08/21/00
X00276	XG.2000.899-3	86737	Fluorene	ND	mg / Kg	20	0.03		08/21/00
X00276	XG.2000.899-3	118-74-1	Hexachlorobenzene	ND	mg / Kg	20	0.03		08/21/00
X00276	XG.2000.899-3	87-68-3	Hexachlorobutadiene	ND	mg / Kg	20	0.03		08/21/00
X00276	XG.2000.899-3	77-47-4	Hexachlorocyclopentadiene	ND	mg / Kg	20	1.5		08/21/00
X00276	XG.2000.899-3	67-72-1	Hexachloroethane	ND	mg / Kg	20	0.03		08/21/00
X00276	XG.2000.899-3	193-39-5	Indeno(1,2,3-cd)pyrene	ND	mg / Kg	20	0.3		08/21/00
X00276	XG.2000.899-3	78-59-1	Isophorone	ND	mg / Kg	20	0.03		08/21/00
X00276	XG.2000.899-3	621-64-7	n-Nitroso-di-n-propylamine	ND	mg / Kg	20	0.03		08/21/00
X00276	XG.2000.899-3	62-75-9	n-Nitroso-dimethyl-amine	ND	mg / Kg	20	0.3		08/21/00
X00276	XG.2000.899-3	86-30-6	n-Nitrosodiphenylamine	ND	mg / Kg	20	0.03		08/21/00
X00276	XG.2000.899-3	91-20-3	Naphthalene	52	mg / Kg	20	0.03		08/21/00
X00276	XG.2000.899-3	98-95-3	Nitrobenzene	ND	mg / Kg	20	0.03		08/21/00
X00276	XG.2000.899-3	87-86-5	Pentachlorophenol	ND	mg / Kg	20	0.3		08/21/00
X00276	XG.2000.899-3	85-01-8	Phenanthrene	ND	mg / Kg	20	0.03		08/21/00
X00276	XG.2000.899-3	108-95-2	Phenol	ND	mg / Kg	20	0.3		08/21/00
X00276	XG.2000.899-3	129-00-0	Pyrene	ND	mg / Kg	20	0.03		08/21/00

Certificate of Analysis

Client: **CH2M HILL**

Project: **0008017** **KAFB**

X00276	XG.2000.899-3	110-86-1	Pyridine	ND	mg / Kg	20	0.3		08/21/00

0008017-04B **SW846 ME/8015A Diesel Range Organics by GC/FID**

X00272	XG.2000.823-25		Diesel Range Organics	15000	mg / Kg	50	25		08/04/00

**** Sample specific Detection Limit is determined by multiplying the sample Dilution Factor by the listed Reporting Detection Limit. ****

**** ND = Not detected: less than the sample specific Detection Limit. Results relate only to the items tested. ****

footnote [1] Sample was received with headspace.

AIGAI ANALYTICAL LABORATORIES, INC.

Chain of Custody Record

Lab job No.: 8017 Date 8/1

Page 1 of 1

7300 JEFFERSON NE.
ALBUQUERQUE, NEW MEXICO 87
(505) 345-8964

3332 WEDGEWOOD
EL PASO, TEXAS 79925
(915) 593-6000

127 EASTGATE DRIVE, 212-C
LOS ALAMOS, NEW MEXICO 87544
(505) 662-2558

Client: CH2M HILL

Address: 6001 INDIAN SCHOOL RD

City / State / Zip: Albuquerque NM 87

Project Name / Number: KAFB

Contract / Purchase Order / Quote:

Project Manager / Contact: S. MINCHAK

Telephone No.: 884 5600

Fax No.: 883 7507

Samplers: (signature)

Analysis Required

AAL Fraction Number	Field Sample Number / Location	Date	Time	Sample Type	Type / Size of Container	Preservation Temp.	Preservation Chemical	No. of Containers	DRO	GRO	VOC	SVOC	BTEX					Remarks
	ST06 SB23 175	7/30	1400	Soil	2 x 4oz	ICE	NONE	2	X	X			X					
	ST06 SB23 200	↓	1700	↓	↓	↓	↓	↓	X	X	X	X						
	ST06 FieldDup1	↓	1400	↓	↓	↓	↓	↓	X	X			X					
	ST06 FieldDup5	↓	1700	↓	↓	↓	↓	↓	X	X	X	X						

Relinquished by:	Date	Received by:	Relinquished by:	Date	Received by:
Signature:	8/1	Signature:	Signature:		Signature:
Printed:	Time	Printed:	Printed:	Time	Printed:
Company:		Company: AAL	Company:		Company:
Reason:		Reason: ANALYSIS	Reason:		Reason:

Method of Shipment:

Shipment No.

Special Instructions:

Comments: All samples had PID #s >1000 ppm very hot. You've been warned

After analysis, samples are to be:

- ☐ Disposed of (additional fee)
- ☐ Stored (30 days max)
- ☐ Stored over 30 days (additional fee)
- ☐ Returned to customer

COURIER

ASSAIGAI
ANALYTICAL
LABORATORIES, INC.
7300 Jefferson, NE • Albuquerque, New Mexico 87109 • (505) 345-8964 • FAX (505) 345-7259
3332 Wedgewood Dr., Suite N • El Paso, Texas 79925 • (915) 593-6300 • FAX (915) 593-7820
127 Eastgate Drive, 212-C • Los Alamos, New Mexico 87544 • (505) 662-2558

RECEIVED SEP - 1 2000

Explanation of codes

B	*analyte detected in Method Blank*
E	*result is estimated*
H	*analyzed out of hold time*
N	*tentatively identified compound*
S	*subcontracted*
1-9	*see footnote*

CH2M HILL
attn: **SHARON MINCHAK**
6001 INDIAN SCHOOL RD NE STE 350
ALBUQUERQUE, NM 87110-4140

Assaigai Analytical Laboratories, Inc.

Certificate of Analysis

Client: **CH2M HILL**
Project: **0008058 KAFB**

William P. Biava: President of Assaigai Analytical Laboratories, Inc.

Client Sample ID: ***ST106 ~~SB23~~ 270*** SB-26 BR2
Sample Matrix: ***SOIL***
Sample Collected: ***08/03/00 10:15:00***

Group	Run Sequence	CAS #	Analyte	Result	Units	Dilution Factor	Detection Limit	Code	Run Date
0008058-01A		**SW846 5030A/8015A GRO by GC/FID**							
X00298	XG.2000.841-4		Gasoline Range Organics	90000	mg / Kg	40000	0.25		08/08/00
0008058-01A		**SW846 8260A Purgeable VOCs by GC/MS**							
X00296	XG.2000.848-13	75-34-3	1,1 Dichloroethane	ND	mg / Kg	1000	0.005	1	08/08/00
X00296	XG.2000.848-13	75-34-3	1,1 Dichloroethene	ND	mg / Kg	1000	0.005	1	08/08/00
X00296	XG.2000.848-13	71-55-6	1,1,1 Trichloroethane	ND	mg / Kg	1000	0.005	1	08/08/00
X00296	XG.2000.869-2	630-20-6	1,1,1,2 Tetrachloroethane	ND	mg / Kg	10000	0.005	1	08/10/00
X00296	XG.2000.869-2	79-00-5	1,1,2 Trichloroethane	ND	mg / Kg	10000	0.005	1	08/10/00
X00296	XG.2000.848-13	79-34-5	1,1,2,2 Tetrachloroethane	ND	mg / Kg	1000	0.005	1	08/08/00
X00296	XG.2000.869-2	106-93-4	1,2 Dibromoethane (EDB)	ND	mg / Kg	10000	0.005	1	08/10/00
X00296	XG.2000.848-13	95-50-1	1,2 Dichlorobenzene	ND	mg / Kg	1000	0.005	1	08/08/00
X00296	XG.2000.848-13	107-06-2	1,2 Dichloroethane	ND	mg / Kg	1000	0.005	1	08/08/00
X00296	XG.2000.848-13	78-87-5	1,2 Dichloropropane	ND	mg / Kg	1000	0.005	1	08/08/00
X00296	XG.2000.848-13	96-18-4	1,2,3 Trichloropropane	ND	mg / Kg	1000	0.005	1	08/08/00
X00296	XG.2000.848-13	95-63-6	1,2,4-Trimethylbenzene	560	mg / Kg	1000	0.005	1	08/08/00
X00296	XG.2000.848-13	541-73-1	1,3 Dichlorobenzene	ND	mg / Kg	1000	0.005	1	08/08/00
X00296	XG.2000.848-13	108-67-8	1,3,5-Trimethylbenzene	220	mg / Kg	1000	0.005	1	08/08/00
X00296	XG.2000.869-2	764-41-0	1,4 Dichloro-2-butene	ND	mg / Kg	10000	0.05	1	08/10/00
X00296	XG.2000.848-13	106-46-7	1,4 Dichlorobenzene	ND	mg / Kg	1000	0.005	1	08/08/00
X00296	XG.2000.848-13	78-93-3	2-Butanone (MEK)	ND	mg / Kg	1000	0.025	1	08/08/00
X00296	XG.2000.848-13	110-75-8	2-Chloroethylvinylether	ND	mg / Kg	1000	0.025	1	08/08/00
X00296	XG.2000.869-2	591-78-6	2-Hexanone (MBK)	ND	mg / Kg	10000	0.025	1	08/10/00
X00296	XG.2000.848-13	108-10-1	4-Methyl-2-pentanone (MIBK)	ND	mg / Kg	1000	0.025	1	08/08/00

Member
American Council of
Independent Laboratories, Inc.
REPRODUCTION OF THIS REPORT IS PROHIBITED WITHOUT WRITTEN CONSENT OF AAL
REPORT MAY NOT BE USED IN ANY MANNER BY THE CLIENT OR ANY OTHER PERSON OR ENTITY
PRODUCT ENDORSEMENT OR ADVERTISING PROCESS

Certificate of Analysis

Client: **CH2M HILL**

Project: **0008058** **KAFB**

X00296	XG.2000.858-4	67-64-1	Acetone	380	mg / Kg	1000	0.05	1	08/08/00
X00296	XG.2000.848-13	107-02-8	Acrolein	ND	mg / Kg	1000	0.1	1	08/08/00
X00296	XG.2000.848-13	107-13-1	Acrylonitrile	ND	mg / Kg	1000	0.1	1	08/08/00
X00296	XG.2000.848-13	71-43-2	Benzene	630	mg / Kg	1000	0.005	1	08/08/00
X00296	XG.2000.869-2	75-27-4	Bromodichloromethane	ND	mg / Kg	10000	0.005	1	08/10/00
X00296	XG.2000.869-2	75-25-2	Bromoform	ND	mg / Kg	10000	0.005	1	08/10/00
X00296	XG.2000.848-13	74-83-9	Bromomethane	ND	mg / Kg	1000	0.025	1	08/08/00
X00296	XG.2000.848-13	75-15-0	Carbon disulfide	ND	mg / Kg	1000	0.025	1	08/08/00
X00296	XG.2000.848-13	56-23-5	Carbon tetrachloride	ND	mg / Kg	1000	0.005	1	08/08/00
X00296	XG.2000.869-2	108-90-7	Chlorobenzene	ND	mg / Kg	10000	0.005	1	08/10/00
X00296	XG.2000.869-2	124-48-1	Chlorodibromomethane	ND	mg / Kg	10000	0.005	1	08/10/00
X00296	XG.2000.848-13	75-00-3	Chloroethane	ND	mg / Kg	1000	0.025	1	08/08/00
X00296	XG.2000.848-13	67-66-3	Chloroform	ND	mg / Kg	1000	0.005	1	08/08/00
X00296	XG.2000.848-13	74-87-3	Chloromethane	ND	mg / Kg	1000	0.025	1	08/08/00
X00296	XG.2000.848-13	156-59-2	cis-1,2 dichloroethene	ND	mg / Kg	1000	0.005	1	08/08/00
X00296	XG.2000.848-13	10061-01-5	cis-1,3 dichloropropene	ND	mg / Kg	1000	0.005	1	08/08/00
X00296	XG.2000.848-13	74-95-3	Dibromomethane	ND	mg / Kg	1000	0.005	1	08/08/00
X00296	XG.2000.869-2	97-63-2	Ethyl methacrylate	ND	mg / Kg	10000	0.025	1	08/10/00
X00296	XG.2000.869-2	100-41-4	Ethylbenzene	930	mg / Kg	10000	0.005	1	08/10/00
X00296	XG.2000.848-13		Freon 113	ND	mg / Kg	1000	0.025	1	08/08/00
X00296	XG.2000.848-13	75-71-8	Freon 12	ND	mg / Kg	1000	0.05	1	08/08/00
X00296	XG.2000.848-13	74-88-4	Iodomethane	ND	mg / Kg	1000	0.025	1	08/08/00
X00296	XG.2000.848-13	1634-04-4	Methyl t-butyl ether (MTBE)	ND	mg / Kg	1000	0.005	1	08/08/
X00296	XG.2000.848-13	75-09-2	Methylene chloride	ND	mg / Kg	1000	0.05	1	08/08
X00296	XG.2000.848-13	91-20-3	Naphthalene	72	mg / Kg	1000	0.025	1	08/08/00
X00296	XG.2000.869-2	95-47-6	o-Xylene	640	mg / Kg	10000	0.005	1	08/10/00
X00296	XG.2000.869-2	108-38-3/106-42	p/m Xylenes	1900	mg / Kg	10000	0.01	1	08/10/00
X00296	XG.2000.869-2	100-42-5	Styrene	ND	mg / Kg	10000	0.005	1	08/10/00
X00296	XG.2000.848-13	156-60-5	t-1,2 Dichloroethene	ND	mg / Kg	1000	0.005	1	08/08/00
X00296	XG.2000.869-2	10061-02-6	t-1,3 Dichloropropene	ND	mg / Kg	10000	0.005	1	08/10/00
X00296	XG.2000.869-2	127-18-4	Tetrachloroethene	ND	mg / Kg	10000	0.005	1	08/10/00
X00296	XG.2000.869-2	108-88-3	Toluene	3600	mg / Kg	10000	0.005	1	08/10/00
X00296	XG.2000.848-13	79-01-6	Trichloroethene	ND	mg / Kg	1000	0.005	1	08/08/00
X00296	XG.2000.848-13	75-69-4	Trichlorofluoromethane	ND	mg / Kg	1000	0.025	1	08/08/00
X00296	XG.2000.848-13	108-05-4	Vinyl acetate	ND	mg / Kg	1000	0.025	1	08/08/00
X00296	XG.2000.848-13	75-01-4	Vinyl chloride	ND	mg / Kg	1000	0.025	1	08/08/00

0008058-01B **SW846 ME/8015A Diesel Range Organics by GC/FID**

X00293	XG.2000.832-8		Diesel Range Organics	24000	mg / Kg	100	25	08/07/00

SB-26 B jx

Client Sample ID ***ST106 ~~SB23~~ 285*** Sample Matrix ***SOIL*** Sample Collected *08/03/00 14:25:00*

QC Group	Run Sequence	CAS #	Analyte	Result	Units	Dilution Factor	Detection Limit	Code	Run Date

0008058-02A **SW846 5030A/8015A GRO by GC/FID**

X00298	XG.2000.841-5		Gasoline Range Organics	ND	mg / Kg	1	0.25		08/08/

Assaigai Analytical Laboratories, Inc.

Certificate of Analysis

.t: **CH2M HILL**

Project: **0008058 KAFB**

0008058-02B		**SW846 5030A/8021B Purgeable VOCs by GC/PID**							
X00286	XG.2000.843-4	71-43-2	Benzene	ND	mg / Kg	1	0.005	1	08/05/00
X00286	XG.2000.843-4	100-41-4	Ethylbenzene	ND	mg / Kg	1	0.005	1	08/05/00
X00286	XG.2000.843-4	95-47-6	o-Xylene	ND	mg / Kg	1	0.005	1	08/05/00
X00286	XG.2000.843-4	108-38-3/106-42	p/m-Xylenes	ND	mg / Kg	1	0.01	1	08/05/00
X00286	XG.2000.843-4	108-88-3	Toluene	ND	mg / Kg	1	0.005	1	08/05/00
0008058-02B		**SW846 ME/8015A Diesel Range Organics by GC/FID**							
X00293	XG.2000.832-4		Diesel Range Organics	ND	mg / Kg	1	25		08/07/00

SB-26 B8

Client Sample ID ***ST106 ~~SB23~~ 295*** Sample Matrix ***SOIL*** Sample Collected ***08/03/00 16:30:00***

QC Group	Run Sequence	CAS #	Analyte	Result	Units	Dilution Factor	Detection Limit	Code	Run Date
0008058-03A		**SW846 5030A/8015A GRO by GC/FID**							
X00298	XG.2000.841-11		Gasoline Range Organics	210	mg / Kg	100	0.25		08/09/00
0008058-03B		**SW846 5030A/8021B Purgeable VOCs by GC/PID**							
X00286	XG.2000.843-6	71-43-2	Benzene	ND	mg / Kg	100	0.005	1	08/08/00
[illegible]	XG.2000.843-6	100-41-4	Ethylbenzene	0.77	mg / Kg	100	0.005	1	08/08/00
X00286	XG.2000.843-6	95-47-6	o-Xylene	1.1	mg / Kg	100	0.005	1	08/08/00
X00286	XG.2000.843-6	108-38-3/106-42	p/m-Xylenes	3.9	mg / Kg	100	0.01	1	08/08/00
X00286	XG.2000.843-6	108-88-3	Toluene	ND	mg / Kg	100	0.005	1	08/08/00
0008058-03B		**SW846 ME/8015A Diesel Range Organics by GC/FID**							
X00293	XG.2000.832-9		Diesel Range Organics	230	mg / Kg	1	25		08/07/00

**** Sample specific Detection Limit is determined by multiplying the sample Dilution Factor by the listed Reporting Detection Limit. ****

**** ND = Not detected: less than the sample specific Detection Limit. Results relate only to the items tested. ****

footnote [1] Samples were recieved with headspace.

AIGAI ANALYTICAL LABORATORIES, INC.

Chain of Cus dy Record

Lab job No.: 8058 Date 8/4

Page 1 of 1

7300 JEFFERSON N.E.
ALBUQUERQUE, NEW MEXICO
(505) 345-8964

3332 WEDGEWOOD
EL PASO, TEXAS 79925
(915) 593-6000

127 EASTGATE DRIVE, 212-C
LOS ALAMOS, NEW MEXICO 87544
(505) 662-2558

Client: CH2M HILL

Address: 6001 INDIAN SCHOOL RD #350

City / State / Zip: Albq 87110

Project Name / Number: KAFB

Contract / Purchase Order / Quote:

Project Manager / Contact: S. Minchack

Telephone No.: 884-5600

Fax No.: 883-7507

Samplers: (signature)

Analysis Required

AAL Fraction Number	Field Sample Number / Location	Date	Time	Sample Type	Type / Size of Container	Preservation Temp.	Preservation Chemical	No. of Containers	GRO	DRO	BTEX	VOC	SVOC						Remarks
[illegible]	ST 106 SB23 270	8/3	1015	Soil	2 x 4 oz VOA	ICE	NO	2	X	X		X							
[illegible]	ST 106 SB23 285	8/3	1425	Soil	2 x 4 oz VOA	ICE	NO	2	X	X	X								
[illegible]	ST 106 SB23 295	8/3	1630	Soil	2 x 4 oz VOA	ICE	NO	2	X	X	X								

Relinquished by:	Date	Received by:	Relinquished by:	Date	Received by:
Signature		Signature	Signature	8/4	Signature
Printed	Time	Printed	Printed	Time	Printed
Company		Company	Company CH2M HILL	9:10 A.M.	Company
Reason		Reason	Reason VERTOLAB		Reason

Method of Shipment:

Shipment No.

Special Instructions:

Comments:

After analysis, samples are to be:

- ❑ Disposed of (additional fee)
- ❑ Stored (30 days max)
- ❑ Stored over 30 days (additional fee)
- ❑ Returned to customer

COURIER

ASSAIGAI
ANALYTICAL
LABORATORIES, INC.
7300 Jefferson, NE • Albuquerque, New Mexico 87109 • (505) 345-8964 • FAX (505) 345-7259
3332 Wedgewood Dr., Suite N • El Paso, Texas 79925 • (915) 593-6000 • FAX (915) 593-7820
127 Eastgate Drive, 212-C • Los Alamos, New Mexico 87544 • (505) 662-255

RECEIVED AUG 1 1 2000

Explanation of codes

B	analyte detected in Method Blank
E	result is estimated
H	analyzed out of hold time
N	tentatively identified compound
S	subcontracted
1-9	see footnote

CH2M HILL
attn: **SHARON MINCHAK**
6001 INDIAN SCHOOL RD NE STE 350
ALBUQUERQUE, NM 87110-4140

Assaigai Analytical Laboratories, Inc.

Certificate of Analysis

Client: **CH2M HILL**
Project: **0008067 KAFB**

William P. Biava, President of Assaigai Analytical Laboratories, Inc.

Client Sample ID ***ST106 SB23 310'*** Sample Matrix ***SOIL*** Sample Collected ***08/04/00 11:35:00***

Group	Run Sequence	CAS #	Analyte	Result	Units	Dilution Factor	Detection Limit	Code	Run Date
0008067-01A		**SW846 5030A/8015A GRO by GC/FID**							
X00298	XG.2000.841-6		Gasoline Range Organics	0.54	mg / Kg	1	0.25		08/08/00
0008067-01A		**SW846 5030A/8021B Purgeable VOCs by GC/PID**							
X00286	XG.2000.843-2	71-43-2	Benzene	ND	mg / Kg	1	0.005	1	08/05/00
X00286	XG.2000.843-2	100-41-4	Ethylbenzene	ND	mg / Kg	1	0.005	1	08/05/00
X00286	XG.2000.843-2	95-47-6	o-Xylene	ND	mg / Kg	1	0.005	1	08/05/00
X00286	XG.2000.843-2	108-38-3/106-42	p/m-Xylenes	ND	mg / Kg	1	0.01	1	08/05/00
X00286	XG.2000.843-2	108-88-3	Toluene	ND	mg / Kg	1	0.005	1	08/05/00
0008067-01A		**SW846 ME/8015A Diesel Range Organics by GC/FID**							
X00293	XG.2000.832-12		Diesel Range Organics	ND	mg / Kg	1	25		08/07/00

Client Sample ID ***ST106 SB23 315'*** Sample Matrix ***SOIL*** Sample Collected ***08/04/00 12:40:00***

QC Group	Run Sequence	CAS #	Analyte	Result	Units	Dilution Factor	Detection Limit	Code	Run Date
0008067-02A		**SW846 5030A/8015A GRO by GC/FID**							
X00298	XG.2000.841-7		Gasoline Range Organics	ND	mg / Kg	1	0.25		08/08/00

Member:
American Council of
Independent Laboratories, Inc.

REPRODUCTION OF THIS REPORT IN LESS THAN FULL REQUIRES THE WRITTEN CONSENT OF AAL.
THIS REPORT MAY NOT BE USED IN ANY MANNER BY THE CLIENT OR ANY OTHER THIRD PARTY TO CLAIM
PRODUCT ENDORSEMENT BY ANY ACCREDITATION PROGRAM.

Assaigai Analytical Laboratories, Inc.

Certificate of Analysis

Client: **CH2M HILL**

Project: **0008067** **KAFB**

0008067-02A **SW846 5030A/8021B Purgeable VOCs by GC/PID**

X00286	XG.2000.843-3	71-43-2	Benzene	ND	mg / Kg	1	0.005	1	08/05/00
X00286	XG.2000.843-3	100-41-4	Ethylbenzene	ND	mg / Kg	1	0.005	1	08/05/00
X00286	XG.2000.843-3	95-47-6	o-Xylene	ND	mg / Kg	1	0.005	1	08/05/00
X00286	XG.2000.843-3	108-38-3/106-42	p/m-Xylenes	ND	mg / Kg	1	0.01	1	08/05/00
X00286	XG.2000.843-3	108-88-3	Toluene	ND	mg / Kg	1	0.005	1	08/05/00

0008067-02A **SW846 ME/8015A Diesel Range Organics by GC/FID**

X00293	XG.2000.832-13		Diesel Range Organics	ND	mg / Kg	1	25		08/07/00

**** Sample specific Detection Limit is determined by multiplying the sample Dilution Factor by the listed Reporting Detection Limit. ****

**** ND = Not detected: less than the sample specific Detection Limit. Results relate only to the items tested. ****

footnote [1] Samples were recieved with headspace.

Chain of Custody Record

ANALYTICAL LABORATORIES, INC.

7300 JEFFERSON NE
ALBUQUERQUE, NEW MEXICO 87
(505) 345-8964

3332 WEDGEWOOD
EL PASO, TEXAS 79925
(915) 593-6000

127 EASTGATE DRIVE, 212-C
LOS ALAMOS, NEW MEXICO 87544
(505) 662-2558

Lab job No.: 8067 Date / /

Page / of /

Client: CH2M HILL

Address: 1001 Northstar Rd #350

City / State / Zip: HIBR 97110

Project Name / Number: TAFB

Contract / Purchase Order / Quote:

Project Manager / Contact: S Mulvink

Telephone No.: 794 5000

Fax No.: 503 7507

Samplers: (signature): [signature]

AAL Fraction Number	Field Sample Number / Location	Date	Time	Sample Type	Type / Size of Container	Preservation Temp.	Preservation Chemical	No. of Containers	Chlor	DIW	BTEX								Remarks
1A	ST166 5023 310'	8/4	1135	Soil	4oz VOA	Ice		1	✓	✓	X								
1A	ST166 5023 315'	8/4	1240	Soil	4oz VOA	Ice		1	✓	✓	X								

Relinquished by:	Date	Received by:	Relinquished by:	Date	Received by:
Signature:		Signature:	Signature: [signature]	8/4	Signature: [signature]
Printed:	Time	Printed:	Printed: LOUIS J LEFEVRE	Time	Printed: [signature]
Company:		Company:	Company: CH2M		Company: [illegible]
Reason:		Reason:	Reason: XFR TO LAB		Reason:

Method of Shipment:

Shipment No.

Special Instructions:

Comments:

After analysis, samples are to be:

- ☐ Disposed of (additional fee)
- ☐ Stored (30 days max)
- ☐ Stored over 30 days (additional fee)
- ☐ Returned to customer

COURIER

ASSAIGAI
ANALYTICAL
LABORATORIES, INC.
7300 Jefferson, NE • Albuquerque, New Mexico 87109 • (505) 345-8964 • FAX (505) 345-7259
3332 Wedgewood Dr., Suite N • El Paso, Texas 79925 • (915) 593-6000 • FAX (915) 593-7820
127 Eastgate Drive, 212-C • Los Alamos, New Mexico 87544 • (505) 662-2558

RECEIVED AUG 2 4 2000

Explanation of codes

B	*analyte detected in Method Blank*
E	*result is estimated*
H	*analyzed out of hold time*
N	*tentatively identified compound*
S	*subcontracted*
1-9	*see footnote*

CH2M HILL
attn: **SHARON MINCHAK**
6001 INDIAN SCHOOL RD NE STE 350
ALBUQUERQUE, NM 87110-4140

Assaigai Analytical Laboratories, Inc.

Certificate of Analysis

Client: **CH2M HILL**
Project: **0007155 KAFB**

William P. Biava: President of Assaigai Analytical Laboratories, Inc.

Client Sample ID ***ST106-SB22-50'*** (BR 25) — Sample Matrix ***SOIL*** — Sample Collected ***07/17/00 14:35:00***

Group	Run Sequence	CAS #	Analyte	Result	Units	Dilution Factor	Detection Limit	Code	Run Date
0007155-01A		**SW846 5030A/8021B Purgeable VOCs by GC/PID**							
X00263	XG.2000.766-5	71-43-2	Benzene	14	mg / Kg	2000	0.005		07/20/00
X00263	XG.2000.766-5	100-41-4	Ethylbenzene	180	mg / Kg	2000	0.005		07/20/00
X00263	XG.2000.766-5	95-47-6	o-Xylene	190	mg / Kg	2000	0.005		07/20/00
X00263	XG.2000.766-5	108-38-3/106-42	p/m-Xylenes	610	mg / Kg	2000	0.01		07/20/00
X00263	XG.2000.766-5	108-88-3	Toluene	220	mg / Kg	2000	0.005		07/20/00
0007155-01A		**SW846 8015A GRO by GC/MS**							
X00219	TT.2000.287-5		Gasoline Range Organics	45000	mg/Kg	40000	0.25		07/21/00
0007155-01B		**SW846 ME/8015A Diesel Range Organics by GC/FID**							
X00267	XG.2000.775-3		Diesel Range Organics	7700	mg / Kg	20	25		07/21/00

Client Sample ID ***ST106-SB22-80'*** (SB-25 BR) — Sample Matrix ***SOIL*** — Sample Collected ***07/17/00 16:10:00***

QC Group	Run Sequence	CAS #	Analyte	Result	Units	Dilution Factor	Detection Limit	Code	Run Date
0007155-02A		**SW846 8015A GRO by GC/MS**							
X00219	TT.2000.287-2		Gasoline Range Organics	7200	mg/Kg	2000	0.25		07/20/00

Member:
American Council of
Independent Laboratories, Inc

REPRODUCTION OF THIS REPORT IN LESS THAN FULL REQUIRES THE WRITTEN CONSENT OF AAL.
THIS REPORT MAY NOT BE USED IN ANY MANNER BY THE CLIENT OR ANY OTHER THIRD PARTY TO CLAIM
PRODUCT ENDORSEMENT BY ANY ACCREDITATION PROGRAM.

Certificate of Analysis

Client: **CH2M HILL**

Project: **0007155** **KAFB**

0007155-02A **SW846 8260A Purgeable VOCs by GC/MS**

X00268	XG.2000.771-13	75-34-3	1,1 Dichloroethane	ND	mg / Kg	100	0.005	07/21/0
X00268	XG.2000.771-13	75-34-3	1,1 Dichloroethene	ND	mg / Kg	100	0.005	07/21/0
X00268	XG.2000.771-13	71-55-6	1,1,1 Trichloroethane	ND	mg / Kg	100	0.005	07/21/0
X00268	XG.2000.781-2	630-20-6	1,1,1,2 Tetrachloroethane	ND	mg / Kg	1000	0.005	07/24/0
X00268	XG.2000.781-2	79-00-5	1,1,2 Trichloroethane	ND	mg / Kg	1000	0.005	07/24/0
X00268	XG.2000.771-13	79-34-5	1,1,2,2 Tetrachloroethane	ND	mg / Kg	100	0.005	07/21/0
X00268	XG.2000.781-2	106-93-4	1,2 Dibromoethane (EDB)	ND	mg / Kg	1000	0.005	07/24/0
X00268	XG.2000.771-13	95-50-1	1,2 Dichlorobenzene	ND	mg / Kg	100	0.005	07/21/0
X00268	XG.2000.771-13	107-06-2	1,2 Dichloroethane	ND	mg / Kg	100	0.005	07/21/0
X00268	XG.2000.771-13	78-87-5	1,2 Dichloropropane	ND	mg / Kg	100	0.005	07/21/0
X00268	XG.2000.771-13	96-18-4	1,2,3 Trichloropropane	ND	mg / Kg	100	0.005	07/21/0
X00268	XG.2000.771-13	95-63-6	1,2,4-Trimethylbenzene	74	mg / Kg	100	0.005	07/21/0
X00268	XG.2000.771-13	541-73-1	1,3 Dichlorobenzene	ND	mg / Kg	100	0.005	07/21/0
X00268	XG.2000.771-13	108-67-8	1,3,5-Trimethylbenzene	24	mg / Kg	100	0.005	07/21/0
X00268	XG.2000.781-2	764-41-0	1,4 Dichloro-2-butene	ND	mg / Kg	1000	0.05	07/24/0
X00268	XG.2000.771-13	106-46-7	1,4 Dichlorobenzene	ND	mg / Kg	100	0.005	07/21/0
X00268	XG.2000.771-13	78-93-3	2-Butanone (MEK)	3.2	mg / Kg	100	0.025	07/21/0
X00268	XG.2000.771-13	110-75-8	2-Chloroethylvinylether	ND	mg / Kg	100	0.025	07/21/0
X00268	XG.2000.781-2	591-78-6	2-Hexanone (MBK)	ND	mg / Kg	1000	0.025	07/24/0
X00268	XG.2000.771-13	108-10-1	4-Methyl-2-pentanone (MIBK)	ND	mg / Kg	100	0.025	07/21/0
X00268	XG.2000.771-13	67-64-1	Acetone	7.1	mg / Kg	100	0.05	07/21/0
X00268	XG.2000.771-13	107-02-8	Acrolein	ND	mg / Kg	100	0.1	07/21
X00268	XG.2000.771-13	107-13-1	Acrylonitrile	ND	mg / Kg	100	0.1	07/21/0
X00268	XG.2000.771-13	71-43-2	Benzene	9.8	mg / Kg	100	0.005	07/21/0
X00268	XG.2000.771-13	75-27-4	Bromodichloromethane	ND	mg / Kg	100	0.005	07/21/0
X00268	XG.2000.781-2	75-25-2	Bromoform	ND	mg / Kg	1000	0.005	07/24/0
X00268	XG.2000.771-13	74-83-9	Bromomethane	ND	mg / Kg	100	0.025	07/21/0
X00268	XG.2000.771-13	75-15-0	Carbon disulfide	ND	mg / Kg	100	0.025	07/21/0
X00268	XG.2000.771-13	56-23-5	Carbon tetrachloride	ND	mg / Kg	100	0.005	07/21/0
X00268	XG.2000.781-2	108-90-7	Chlorobenzene	ND	mg / Kg	1000	0.005	07/24/0
X00268	XG.2000.781-2	124-48-1	Chlorodibromomethane	ND	mg / Kg	1000	0.005	07/24/0
X00268	XG.2000.771-13	75-00-3	Chloroethane	ND	mg / Kg	100	0.025	07/21/0
X00268	XG.2000.771-13	67-66-3	Chloroform	ND	mg / Kg	100	0.005	07/21/0
X00268	XG.2000.771-13	74-87-3	Chloromethane	ND	mg / Kg	100	0.025	07/21/0
X00268	XG.2000.771-13	156-59-2	cis-1,2 dichloroethene	ND	mg / Kg	100	0.005	07/21/0
X00268	XG.2000.771-13	10061-01-5	cis-1,3 dichloropropene	ND	mg / Kg	100	0.005	07/21/0
X00268	XG.2000.771-13	74-95-3	Dibromomethane	ND	mg / Kg	100	0.005	07/21/0
X00268	XG.2000.781-2	97-63-2	Ethyl methacrylate	ND	mg / Kg	1000	0.025	07/24/0
X00268	XG.2000.781-2	100-41-4	Ethylbenzene	57	mg / Kg	1000	0.005	07/24/0
X00268	XG.2000.771-13		Freon 113	ND	mg / Kg	100	0.025	07/21/0
X00268	XG.2000.771-13	75-71-8	Freon 12	ND	mg / Kg	100	0.05	07/21/0
X00268	XG.2000.771-13	74-88-4	Iodomethane	ND	mg / Kg	100	0.025	07/21/0
X00268	XG.2000.771-13	1634-04-4	Methyl t-butyl ether (MTBE)	ND	mg / Kg	100	0.005	07/21/0
X00268	XG.2000.771-13	75-09-2	Methylene chloride	ND	mg / Kg	100	0.05	07/21/0
X00268	XG.2000.771-13	91-20-3	Naphthalene	7.5	mg / Kg	100	0.025	07/21/0
X00268	XG.2000.781-2	95-47-6	o-Xylene	55	mg / Kg	1000	0.005	07/24/0
X00268	XG.2000.781-2	108-38-3/106-42	p/m Xylenes	150	mg / Kg	1000	0.01	07/24/

Certificate of Analysis

nt: CH2M HILL

Project: 0007155 KAFB

X00268	XG.2000.781-2	100-42-5	Styrene	ND	mg / Kg	1000	0.005		07/24/00
X00268	XG.2000.771-13	156-60-5	t-1,2 Dichloroethene	ND	mg / Kg	100	0.005		07/21/00
X00268	XG.2000.781-2	10061-02-6	t-1,3 Dichloropropene	ND	mg / Kg	1000	0.005		07/24/00
X00268	XG.2000.781-2	127-18-4	Tetrachloroethene	ND	mg / Kg	1000	0.005		07/24/00
X00268	XG.2000.781-2	108-88-3	Toluene	110	mg / Kg	1000	0.005		07/24/00
X00268	XG.2000.771-13	79-01-6	Trichloroethene	ND	mg / Kg	100	0.005		07/21/00
X00268	XG.2000.771-13	75-69-4	Trichlorofluoromethane	ND	mg / Kg	100	0.025		07/21/00
X00268	XG.2000.771-13	108-05-4	Vinyl acetate	ND	mg / Kg	100	0.025		07/21/00
X00268	XG.2000.771-13	75-01-4	Vinyl chloride	ND	mg / Kg	100	0.025		07/21/00

0007155-02B **SW846 ME/8015A Diesel Range Organics by GC/FID**

X00267	XG.2000.775-6		Diesel Range Organics	8000	mg / Kg	20	25		07/21/00

SB-25 BR

Client Sample ID ***ST106-~~SB22~~-105'*** Sample Matrix ***SOIL*** Sample Collected ***07/17/00 18:10:00***

QC Group	Run Sequence	CAS #	Analyte	Result	Units	Dilution Factor	Detection Limit	Code	Run Date
0007155-03A		**SW846 8015A GRO by GC/MS**							
X00219	TT.2000.287-6		Gasoline Range Organics	52000	mg/Kg	40000	0.25		07/21/00
155-03A		**SW846 8260A Purgeable VOCs by GC/MS**							
68	XG.2000.781-4	75-34-3	1,1 Dichloroethane	ND	mg / Kg	100	0.005		07/24/00
X00268	XG.2000.781-4	75-34-3	1,1 Dichloroethene	ND	mg / Kg	100	0.005		07/24/00
X00268	XG.2000.781-4	71-55-6	1,1,1 Trichloroethane	ND	mg / Kg	100	0.005		07/24/00
X00268	XG.2000.781-4	630-20-6	1,1,1,2 Tetrachloroethane	ND	mg / Kg	100	0.005		07/24/00
X00268	XG.2000.781-4	79-00-5	1,1,2 Trichloroethane	ND	mg / Kg	100	0.005		07/24/00
X00268	XG.2000.781-4	79-34-5	1,1,2,2 Tetrachloroethane	ND	mg / Kg	100	0.005		07/24/00
X00268	XG.2000.781-4	106-93-4	1,2 Dibromoethane (EDB)	ND	mg / Kg	100	0.005		07/24/00
X00268	XG.2000.781-4	95-50-1	1,2 Dichlorobenzene	ND	mg / Kg	100	0.005		07/24/00
X00268	XG.2000.781-4	107-06-2	1,2 Dichloroethane	ND	mg / Kg	100	0.005		07/24/00
X00268	XG.2000.781-4	78-87-5	1,2 Dichloropropane	ND	mg / Kg	100	0.005		07/24/00
X00268	XG.2000.781-4	96-18-4	1,2,3 Trichloropropane	ND	mg / Kg	100	0.005		07/24/00
X00268	XG.2000.781-3	95-63-6	1,2,4-Trimethylbenzene	130	mg / Kg	1000	0.005		07/24/00
X00268	XG.2000.781-4	541-73-1	1,3 Dichlorobenzene	ND	mg / Kg	100	0.005		07/24/00
X00268	XG.2000.781-4	108-67-8	1,3,5-Trimethylbenzene	42	mg / Kg	100	0.005		07/24/00
X00268	XG.2000.781-4	764-41-0	1,4 Dichloro-2-butene	ND	mg / Kg	100	0.05		07/24/00
X00268	XG.2000.781-4	106-46-7	1,4 Dichlorobenzene	ND	mg / Kg	100	0.005		07/24/00
X00268	XG.2000.781-4	78-93-3	2-Butanone (MEK)	ND	mg / Kg	100	0.025		07/24/00
X00268	XG.2000.781-4	110-75-8	2-Chloroethylvinylether	ND	mg / Kg	100	0.025		07/24/00
X00268	XG.2000.781-4	591-78-6	2-Hexanone (MBK)	ND	mg / Kg	100	0.025		07/24/00
X00268	XG.2000.781-4	108-10-1	4-Methyl-2-pentanone (MIBK)	ND	mg / Kg	100	0.025		07/24/00
X00268	XG.2000.781-4	67-64-1	Acetone	ND	mg / Kg	100	0.05		07/24/00
X00268	XG.2000.781-4	107-02-8	Acrolein	ND	mg / Kg	100	0.1		07/24/00
X00268	XG.2000.781-4	107-13-1	Acrylonitrile	ND	mg / Kg	100	0.1		07/24/00
X00268	XG.2000.781-4	71-43-2	Benzene	5.6	mg / Kg	100	0.005		07/24/00
X00268	XG.2000.781-4	75-27-4	Bromodichloromethane	ND	mg / Kg	100	0.005		07/24/00
8	XG.2000.781-4	75-25-2	Bromoform	ND	mg / Kg	100	0.005		07/24/00

Certificate of Analysis

Client: **CH2M HILL**

Project: **0007155** **KAFB**

X00268	XG.2000.781-4	74-83-9	Bromomethane	ND	mg / Kg	100	0.025		07/24/00
X00268	XG.2000.781-4	75-15-0	Carbon disulfide	ND	mg / Kg	100	0.025		07/24/00
X00268	XG.2000.781-4	56-23-5	Carbon tetrachloride	ND	mg / Kg	100	0.005		07/24/00
X00268	XG.2000.781-4	108-90-7	Chlorobenzene	ND	mg / Kg	100	0.005		07/24/00
X00268	XG.2000.781-4	124-48-1	Chlorodibromomethane	ND	mg / Kg	100	0.005		07/24/00
X00268	XG.2000.781-4	75-00-3	Chloroethane	ND	mg / Kg	100	0.025		07/24/00
X00268	XG.2000.781-4	67-66-3	Chloroform	ND	mg / Kg	100	0.005		07/24/00
X00268	XG.2000.781-4	74-87-3	Chloromethane	ND	mg / Kg	100	0.025		07/24/00
X00268	XG.2000.781-4	156-59-2	cis-1,2 dichloroethene	ND	mg / Kg	100	0.005		07/24/00
X00268	XG.2000.781-4	10061-01-5	cis-1,3 dichloropropene	ND	mg / Kg	100	0.005		07/24/00
X00268	XG.2000.781-4	74-95-3	Dibromomethane	ND	mg / Kg	100	0.005		07/24/00
X00268	XG.2000.781-4	97-63-2	Ethyl methacrylate	ND	mg / Kg	100	0.025		07/24/00
X00268	XG.2000.781-4	100-41-4	Ethylbenzene	62	mg / Kg	100	0.005		07/24/00
X00268	XG.2000.781-4		Freon 113	ND	mg / Kg	100	0.025		07/24/00
X00268	XG.2000.781-4	75-71-8	Freon 12	ND	mg / Kg	100	0.05		07/24/00
X00268	XG.2000.781-4	74-88-4	Iodomethane	ND	mg / Kg	100	0.025		07/24/00
X00268	XG.2000.781-4	1634-04-4	Methyl t-butyl ether (MTBE)	ND	mg / Kg	100	0.005		07/24/00
X00268	XG.2000.781-4	75-09-2	Methylene chloride	ND	mg / Kg	100	0.05		07/24/00
X00268	XG.2000.781-4	91-20-3	Naphthalene	68	mg / Kg	100	0.025		07/24/00
X00268	XG.2000.781-4	95-47-6	o-Xylene	38	mg / Kg	100	0.005		07/24/00
X00268	XG.2000.781-4	108-38-3/106-42	p/m Xylenes	85	mg / Kg	100	0.01		07/24/00
X00268	XG.2000.781-4	100-42-5	Styrene	ND	mg / Kg	100	0.005		07/24/00
X00268	XG.2000.781-4	156-60-5	t-1,2 Dichloroethene	ND	mg / Kg	100	0.005		07/24
X00268	XG.2000.781-4	10061-02-6	t-1,3 Dichloropropene	ND	mg / Kg	100	0.005		07/24/00
X00268	XG.2000.781-4	127-18-4	Tetrachloroethene	ND	mg / Kg	100	0.005		07/24/00
X00268	XG.2000.781-4	108-88-3	Toluene	47	mg / Kg	100	0.005		07/24/00
X00268	XG.2000.781-4	79-01-6	Trichloroethene	ND	mg / Kg	100	0.005		07/24/00
X00268	XG.2000.781-4	75-69-4	Trichlorofluoromethane	ND	mg / Kg	100	0.025		07/24/00
X00268	XG.2000.781-4	108-05-4	Vinyl acetate	ND	mg / Kg	100	0.025		07/24/00
X00268	XG.2000.781-4	75-01-4	Vinyl chloride	ND	mg / Kg	100	0.025		07/24/00

0007155-03B **SW846 3550A/8270B SVOCs by GC/MS**

X00259	XG.2000.791-14	120-82-1	1,2,4-Trichlorobenzene	ND	mg / Kg	63	0.03		07/24/00
X00259	XG.2000.791-14	95-50-1	1,2-Dichlorobenzene	ND	mg / Kg	63	0.03		07/24/00
X00259	XG.2000.791-14	541-73-1	1,3-Dichlorobenzene	ND	mg / Kg	63	0.03		07/24/00
X00259	XG.2000.791-14	106-46-7	1,4-Dichlorobenzene	ND	mg / Kg	63	0.03		07/24/00
X00259	XG.2000.791-14	90-12-0	1-Methylnaphthalene	170	mg / Kg	63	0.03		07/24/00
X00259	XG.2000.791-14	58-90-2	2,3,4,6-Tetrachlorophenol	ND	mg / Kg	63	1.5		07/24/00
X00259	XG.2000.791-14	95-95-4	2,4,5-Trichlorophenol	ND	mg / Kg	63	0.3		07/24/00
X00259	XG.2000.791-14	88-06-2	2,4,6-Trichlorophenol	ND	mg / Kg	63	0.3		07/24/00
X00259	XG.2000.791-14	120-83-2	2,4-Dichlorophenol	ND	mg / Kg	63	0.3		07/24/00
X00259	XG.2000.791-14	105-67-9	2,4-Dimethylphenol	ND	mg / Kg	63	0.03		07/24/00
X00259	XG.2000.791-14	51-28-5	2,4-Dinitrophenol	ND	mg / Kg	63	0.67		07/24/00
X00259	XG.2000.791-14	121-14-2	2,4-Dinitrotoluene	ND	mg / Kg	63	0.3		07/24/00
X00259	XG.2000.791-14	606-20-2	2,6-Dinitrotoluene	ND	mg / Kg	63	0.3		07/24/00
X00259	XG.2000.791-14	91-58-7	2-Chloronaphthalene	ND	mg / Kg	63	0.03		07/24/00
X00259	XG.2000.791-14	95-57-8	2-Chlorophenol	ND	mg / Kg	63	0.03		07/24/00
X00259	XG.2000.791-14	91-57-6	2-Methylnaphthalene	180	mg / Kg	63	0.03		07/24/00

Certificate of Analysis

t: **CH2M HILL**

Project: **0007155 KAFB**

X00259	XG.2000.791-14	95-48-7	2-Methylphenol	ND	mg / Kg	63	0.03	07/24/00
X00259	XG.2000.791-14	88-74-4	2-Nitroaniline	ND	mg / Kg	63	0.3	07/24/00
X00259	XG.2000.791-14	88-75-5	2-Nitrophenol	ND	mg / Kg	63	0.3	07/24/00
X00259	XG.2000.791-14		3+4 Methylphenol	ND	mg / Kg	63	0.03	07/24/00
X00259	XG.2000.791-14	91-94-1	3,3-Dichlorobenzidine	ND	mg / Kg	63	0.3	07/24/00
X00259	XG.2000.791-14	99-09-2	3-Nitroaniline	ND	mg / Kg	63	0.3	07/24/00
X00259	XG.2000.791-14	534-52-1	4,6-Dinitro-2-methylphenol	ND	mg / Kg	63	0.3	07/24/00
X00259	XG.2000.791-14	101-55-3	4-Bromophenyl-phenylether	ND	mg / Kg	63	0.03	07/24/00
X00259	XG.2000.791-14	59-50-7	4-Chloro-3-methylphenol	ND	mg / Kg	63	0.3	07/24/00
X00259	XG.2000.791-14	106-47-8	4-Chloroaniline	ND	mg / Kg	63	0.3	07/24/00
X00259	XG.2000.791-14	7005-72-3	4-Chlorophenyl-phenylether	ND	mg / Kg	63	0.03	07/24/00
X00259	XG.2000.791-14	100-01-6	4-Nitroaniline	ND	mg / Kg	63	0.3	07/24/00
X00259	XG.2000.791-14	100-02-7	4-Nitrophenol	ND	mg / Kg	63	0.6	07/24/00
X00259	XG.2000.791-14	83-32-9	Acenaphthene	ND	mg / Kg	63	0.03	07/24/00
X00259	XG.2000.791-14	208-96-8	Acenaphthylene	ND	mg / Kg	63	0.03	07/24/00
X00259	XG.2000.791-14	62-53-3	Aniline	ND	mg / Kg	63	0.3	07/24/00
X00259	XG.2000.791-14	120-12-7	Anthracene	ND	mg / Kg	63	0.03	07/24/00
X00259	XG.2000.791-14		Azobenzene&1,2-Diphenylhydrazine	ND	mg / Kg	63	0.03	07/24/00
X00259	XG.2000.791-14	56-55-3	Benzo (a) anthracene	ND	mg / Kg	63	0.03	07/24/00
X00259	XG.2000.791-14	50-32-8	Benzo(a)pyrene	ND	mg / Kg	63	0.03	07/24/00
X00259	XG.2000.791-14		Benzo(b & k)fluoranthene	ND	mg / Kg	63	0.03	07/24/00
X00259	XG.2000.791-14	191-24-2	Benzo(g,h,i)perylene	ND	mg / Kg	63	0.3	07/24/00
9	XG.2000.791-14	64-85-0	Benzoic acid	ND	mg / Kg	63	3	07/24/00
X00259	XG.2000.791-14	100-51-6	Benzyl alcohol	ND	mg / Kg	63	1.5	07/24/00
X00259	XG.2000.791-14	111-44-4	bis (2-Chloroethyl) ether	ND	mg / Kg	63	0.03	07/24/00
X00259	XG.2000.791-14	111-91-1	bis(2-Chloroethoxy)methane	ND	mg / Kg	63	0.03	07/24/00
X00259	XG.2000.791-14	108-60-1	bis(2-Chloroisopropyl)ether	ND	mg / Kg	63	0.03	07/24/00
X00259	XG.2000.791-14	117-81-7	bis(2-Ethylhexyl)phthalate	ND	mg / Kg	63	0.3	07/24/00
X00259	XG.2000.791-14	85-68-7	Butylbenzylphthalate	ND	mg / Kg	63	0.03	07/24/00
X00259	XG.2000.791-14	218-01-9	Chrysene	ND	mg / Kg	63	0.03	07/24/00
X00259	XG.2000.791-14	84-74-2	di-n-Butylphthalate	ND	mg / Kg	63	0.3	07/24/00
X00259	XG.2000.791-14	117-84-0	di-n-Octylpthalate	ND	mg / Kg	63	0.3	07/24/00
X00259	XG.2000.791-14	53-70-3	Dibenz(a,h)anthracene	ND	mg / Kg	63	0.3	07/24/00
X00259	XG.2000.791-14	132-64-9	Dibenzofuran	4.7	mg / Kg	63	0.03	07/24/00
X00259	XG.2000.791-14	84-66-2	Diethylphthalate	ND	mg / Kg	63	0.03	07/24/00
X00259	XG.2000.791-14	131-11-3	Dimethylphthalate	ND	mg / Kg	63	0.03	07/24/00
X00259	XG.2000.791-14	206-44-0	Fluoranthene	ND	mg / Kg	63	0.03	07/24/00
X00259	XG.2000.791-14	86737	Fluorene	ND	mg / Kg	63	0.03	07/24/00
X00259	XG.2000.791-14	118-74-1	Hexachlorobenzene	ND	mg / Kg	63	0.03	07/24/00
X00259	XG.2000.791-14	87-68-3	Hexachlorobutadiene	ND	mg / Kg	63	0.03	07/24/00
X00259	XG.2000.791-14	77-47-4	Hexachlorocyclopentadiene	ND	mg / Kg	63	1.5	07/24/00
X00259	XG.2000.791-14	67-72-1	Hexachloroethane	ND	mg / Kg	63	0.03	07/24/00
X00259	XG.2000.791-14	193-39-5	Indeno(1,2,3-cd)pyrene	ND	mg / Kg	63	0.3	07/24/00
X00259	XG.2000.791-14	78-59-1	Isophorone	ND	mg / Kg	63	0.03	07/24/00
X00259	XG.2000.791-14	621-64-7	n-Nitroso-di-n-propylamine	ND	mg / Kg	63	0.03	07/24/00
X00259	XG.2000.791-14	62-75-9	n-Nitroso-dimethyl-amine	ND	mg / Kg	63	0.3	07/24/00
X00259	XG.2000.791-14	86-30-6	n-Nitrosodiphenylamine	ND	mg / Kg	63	0.03	07/24/00
59	XG.2000.791-14	91-20-3	Naphthalene	120	mg / Kg	63	0.03	07/24/00

Certificate of Analysis

Client: **CH2M HILL**

Project: **0007155** **KAFB**

X00259	XG.2000.791-14	98-95-3	Nitrobenzene	ND	mg / Kg	63	0.03		07/24/00
X00259	XG.2000.791-14	87-86-5	Pentachlorophenol	ND	mg / Kg	63	0.3		07/24/00
X00259	XG.2000.791-14	85-01-8	Phenanthrene	ND	mg / Kg	63	0.03		07/24/00
X00259	XG.2000.791-14	108-95-2	Phenol	ND	mg / Kg	63	0.3		07/24/00
X00259	XG.2000.791-14	129-00-0	Pyrene	ND	mg / Kg	63	0.03		07/24/00
X00259	XG.2000.791-14	110-86-1	Pyridine	ND	mg / Kg	63	0.3		07/24/00

0007155-03B **SW846 ME/8015A Diesel Range Organics by GC/FID**

X00267	XG.2000.775-7		Diesel Range Organics	29000	mg / Kg	50	25		07/21/00

SB-25 B/

Client Sample ID ***ST106-~~SB22~~-125'*** Sample Matrix ***SOIL*** Sample Collected ***07/18/00 09:50:00***

QC Group	Run Sequence	CAS #	Analyte	Result	Units	Dilution Factor	Detection Limit	Code	Run Date
0007155-04A		**SW846 8015A GRO by GC/MS**							
X00219	TT.2000.287-3		Gasoline Range Organics	4100	mg/Kg	2000	0.25		07/20/00
0007155-04A		**SW846 8260A Purgeable VOCs by GC/MS**							
X00268	XG.2000.781-5	75-34-3	1,1 Dichloroethane	ND	mg / Kg	100	0.005		07/24/00
X00268	XG.2000.781-5	75-34-3	1,1 Dichloroethene	ND	mg / Kg	100	0.005		07/24/00
X00268	XG.2000.781-5	71-55-6	1,1,1 Trichloroethane	ND	mg / Kg	100	0.005		07/2[illegible]
X00268	XG.2000.781-5	630-20-6	1,1,1,2 Tetrachloroethane	ND	mg / Kg	100	0.005		07/24[illegible]
X00268	XG.2000.781-5	79-00-5	1,1,2 Trichloroethane	ND	mg / Kg	100	0.005		07/24/00
X00268	XG.2000.781-5	79-34-5	1,1,2,2 Tetrachloroethane	ND	mg / Kg	100	0.005		07/24/00
X00268	XG.2000.781-5	106-93-4	1,2 Dibromoethane (EDB)	ND	mg / Kg	100	0.005		07/24/00
X00268	XG.2000.781-5	95-50-1	1,2 Dichlorobenzene	ND	mg / Kg	100	0.005		07/24/00
X00268	XG.2000.781-5	107-06-2	1,2 Dichloroethane	ND	mg / Kg	100	0.005		07/24/00
X00268	XG.2000.781-5	78-87-5	1,2 Dichloropropane	ND	mg / Kg	100	0.005		07/24/00
X00268	XG.2000.781-5	96-18-4	1,2,3 Trichloropropane	ND	mg / Kg	100	0.005		07/24/00
X00274	XG.2000.822-22	95-63-6	1,2,4-Trimethylbenzene	8.3	mg / Kg	100	0.005		08/04/00
X00268	XG.2000.781-5	541-73-1	1,3 Dichlorobenzene	ND	mg / Kg	100	0.005		07/24/00
X00268	XG.2000.781-5	108-67-8	1,3,5-Trimethylbenzene	6.0	mg / Kg	100	0.005		07/24/00
X00268	XG.2000.781-5	764-41-0	1,4 Dichloro-2-butene	ND	mg / Kg	100	0.05		07/24/00
X00268	XG.2000.781-5	106-46-7	1,4 Dichlorobenzene	ND	mg / Kg	100	0.005		07/24/00
X00268	XG.2000.781-5	78-93-3	2-Butanone (MEK)	13	mg / Kg	100	0.025		07/24/00
X00268	XG.2000.781-5	110-75-8	2-Chloroethylvinylether	ND	mg / Kg	100	0.025		07/24/00
X00268	XG.2000.781-5	591-78-6	2-Hexanone (MBK)	ND	mg / Kg	100	0.025		07/24/00
X00268	XG.2000.781-5	108-10-1	4-Methyl-2-pentanone (MIBK)	ND	mg / Kg	100	0.025		07/24/00
X00268	XG.2000.781-5	67-64-1	Acetone	27	mg / Kg	100	0.05		07/24/00
X00268	XG.2000.781-5	107-02-8	Acrolein	ND	mg / Kg	100	0.1		07/24/00
X00268	XG.2000.781-5	107-13-1	Acrylonitrile	ND	mg / Kg	100	0.1		07/24/00
X00268	XG.2000.781-5	71-43-2	Benzene	2.2	mg / Kg	100	0.005		07/24/00
X00268	XG.2000.781-5	75-27-4	Bromodichloromethane	ND	mg / Kg	100	0.005		07/24/00
X00268	XG.2000.781-5	75-25-2	Bromoform	ND	mg / Kg	100	0.005		07/24/00
X00268	XG.2000.781-5	74-83-9	Bromomethane	ND	mg / Kg	100	0.025		07/24/00
X00268	XG.2000.781-5	75-15-0	Carbon disulfide	ND	mg / Kg	100	0.025		07/24/00
X00268	XG.2000.781-5	56-23-5	Carbon tetrachloride	ND	mg / Kg	100	0.005		07/2[illegible]

Certificate of Analysis

nt: **CH2M HILL**

Project: **0007155** **KAFB**

X00268	XG.2000.781-5	108-90-7	Chlorobenzene	ND	mg / Kg	100	0.005		07/24/00
X00268	XG.2000.781-5	124-48-1	Chlorodibromomethane	ND	mg / Kg	100	0.005		07/24/00
X00268	XG.2000.781-5	75-00-3	Chloroethane	ND	mg / Kg	100	0.025		07/24/00
X00268	XG.2000.781-5	67-66-3	Chloroform	ND	mg / Kg	100	0.005		07/24/00
X00268	XG.2000.781-5	74-87-3	Chloromethane	ND	mg / Kg	100	0.025		07/24/00
X00268	XG.2000.781-5	156-59-2	cis-1,2 dichloroethene	ND	mg / Kg	100	0.005		07/24/00
X00268	XG.2000.781-5	10061-01-5	cis-1,3 dichloropropene	ND	mg / Kg	100	0.005		07/24/00
X00268	XG.2000.781-5	74-95-3	Dibromomethane	ND	mg / Kg	100	0.005		07/24/00
X00268	XG.2000.781-5	97-63-2	Ethyl methacrylate	ND	mg / Kg	100	0.025		07/24/00
X00268	XG.2000.781-5	100-41-4	Ethylbenzene	4.2	mg / Kg	100	0.005		07/24/00
X00268	XG.2000.781-5		Freon 113	ND	mg / Kg	100	0.025		07/24/00
X00268	XG.2000.781-5	75-71-8	Freon 12	ND	mg / Kg	100	0.05		07/24/00
X00268	XG.2000.781-5	74-88-4	Iodomethane	ND	mg / Kg	100	0.025		07/24/00
X00268	XG.2000.781-5	1634-04-4	Methyl t-butyl ether (MTBE)	ND	mg / Kg	100	0.005		07/24/00
X00268	XG.2000.781-5	75-09-2	Methylene chloride	ND	mg / Kg	100	0.05		07/24/00
X00268	XG.2000.781-5	91-20-3	Naphthalene	ND	mg / Kg	100	0.025		07/24/00
X00268	XG.2000.781-5	95-47-6	o-Xylene	12	mg / Kg	100	0.005		07/24/00
X00268	XG.2000.781-5	108-38-3/106-42	p/m Xylenes	38	mg / Kg	100	0.01		07/24/00
X00268	XG.2000.781-5	100-42-5	Styrene	ND	mg / Kg	100	0.005		07/24/00
X00268	XG.2000.781-5	156-60-5	t-1,2 Dichloroethene	ND	mg / Kg	100	0.005		07/24/00
X00268	XG.2000.781-5	10061-02-6	t-1,3 Dichloropropene	ND	mg / Kg	100	0.005		07/24/00
X00268	XG.2000.781-5	127-18-4	Tetrachloroethene	ND	mg / Kg	100	0.005		07/24/00
8	XG.2000.781-5	108-88-3	Toluene	25	mg / Kg	100	0.005		07/24/00
68	XG.2000.781-5	79-01-6	Trichloroethene	ND	mg / Kg	100	0.005		07/24/00
X00268	XG.2000.781-5	75-69-4	Trichlorofluoromethane	ND	mg / Kg	100	0.025		07/24/00
X00268	XG.2000.781-5	108-05-4	Vinyl acetate	ND	mg / Kg	100	0.025		07/24/00
X00268	XG.2000.781-5	75-01-4	Vinyl chloride	ND	mg / Kg	100	0.025		07/24/00

0007155-04B **SW846 ME/8015A Diesel Range Organics by GC/FID**

X00267	XG.2000.775-9		Diesel Range Organics	2200	mg / Kg	10	25		07/21/00

SB-25 8 pr

Client Sample ID ***ST106-~~SB22~~-145'*** Sample Matrix ***SOIL*** Sample Collected ***07/18/00 14:35:00***

QC Group	Run Sequence	CAS #	Analyte	Result	Units	Dilution Factor	Detection Limit	Code	Run Date
0007155-05A		**SW846 5030A/8021B Purgeable VOCs by GC/PID**							
X00263	XG.2000.766-6	71-43-2	Benzene	ND	mg / Kg	2000	0.005		07/20/00
X00263	XG.2000.766-6	100-41-4	Ethylbenzene	32	mg / Kg	2000	0.005		07/20/00
X00263	XG.2000.766-6	95-47-6	o-Xylene	69	mg / Kg	2000	0.005		07/20/00
X00269	XG.2000.777-7	108-38-3/106-42	p/m-Xylenes	120	mg / Kg	4000	0.01		07/24/00
X00263	XG.2000.766-6	108-88-3	Toluene	84	mg / Kg	2000	0.005		07/20/00
0007155-05A		**SW846 8015A GRO by GC/MS**							
X00219	TT.2000.287-7		Gasoline Range Organics	45000	mg/Kg	40000	0.25		07/21/00

Certificate of Analysis

Client: **CH2M HILL**

Project: **0007155** **KAFB**

0007155-05B **SW846 ME/8015A Diesel Range Organics by GC/FID**

X00267	XG.2000.775-10		Diesel Range Organics	12000	mg / Kg	20	25		07/21/00

**** Sample specific Detection Limit is determined by multiplying the sample Dilution Factor by the listed Reporting Detection Limit. ****

**** ND = Not detected: less than the sample specific Detection Limit. Results relate only to the items tested. ****

AIGAI ANALYTICAL LABORATORIES, INC.

Chain of Custody Record

7300 JEFFERSON N.E.
ALBUQUERQUE, NEW MEXICO 8
(505) 345-8964

3332 WEDGEWOOD
EL PASO, TEXAS 79925
(915) 593-6000

127 EASTGATE DRIVE, 212-C
LOS ALAMOS, NEW MEXICO 87544
(505) 662-2558

Lab job No.: 7155 Date 7/17/2000

Page 1 of 1

Client CH2M HILL

Address 6001 INDIAN School Rd #350

City / State / Zip Albq NM 87110

Project Name / Number KAFB

Contract / Purchase Order / Quote

Project Manager / Contact S. MINCHAR

Telephone No. 884-5600

Fax No. 883 7507

Samplers: (signature)

Analysis Required

AAL Fraction Number	Field Sample Number / Location	Date	Time	Sample Type	Type / Size of Container	Preservation Temp.	Preservation Chemical	No. of Containers	GRO	DRO	BTEX	VOC	SVOC						Remarks
[illegible]	ST106-SB22-50'	7/17	1435	Soil	2x4oz VOA	ICE	NONE	2	X	X	X								
[illegible]	ST106-SB22-80'	7/17	1610	Soil	2x4oz VOA	ICE	NONE	2	X	X		X							
[illegible]	ST106-SB22-105'	7/17	1810	Soil	2x4oz VOA	ICE	NONE	2	X	X		X	X						
[illegible]	ST106-SB22-125'	7/18	0950	Soil	2x4oz VOA	ICE	NONE	2	X	X		X							
[illegible]	ST106-SB22-145	7/18	1435	Soil	2x4oz VOA	ICE	NONE	2	X	X	X								
	145 B52	7/18/00																	

Five samples

Relinquished by:	Date	Received by:	Relinquished by:	Date	Received by:
Signature	7/19/00	Signature	Signature		Signature
Printed	Time	Printed	Printed	Time	Printed
Company CH2M HILL	8:55	Company	Company		Company
Reason XFR TO LAB		Reason	Reason		Reason

Method of Shipment:

Shipment No.

Special Instructions:

Comments:

After analysis, samples are to be:

- ❑ Disposed of (additional fee)
- ❑ Stored (30 days max)
- ❑ Stored over 30 days (additional fee)
- ❑ Returned to customer

COURIER

ASSAIGAI
ANALYTICAL
LABORATORIES, INC.
7300 Jefferson, NE • Albuquerque, New Mexico 87109 • (505) 345-8964 • FAX (505) 345-7259
3332 Wedgewood Dr., Suite N • El Paso, Texas 79925 • (915) 593-6000 • FAX (915) 593-7820
127 Eastgate Drive, 212-C • Los Alamos, New Mexico 87544 • (505) 662-2558

RECEIVED AUG 1 1 2000

Explanation of codes

B	*analyte detected in Method Blank*
E	*result is estimated*
H	*analyzed out of hold time*
N	*tentatively identified compound*
S	*subcontracted*
1-9	*see footnote*

CH2M HILL
attn: **SHARON MINCHAK**
6001 INDIAN SCHOOL RD NE STE 350
ALBUQUERQUE, NM 87110-4140

Assaigai Analytical Laboratories, Inc.

Certificate of Analysis

Client: **CH2M HILL**
Project: **0007201 KAFB**

William P. Biava: President of Assaigai Analytical Laboratories, Inc.

Client Sample ID ***ST106-SB22-175'*** Sample Matrix ***SOIL*** Sample Collected ***07/19/00 08:45:00***

Group	Run Sequence	CAS #	Analyte	Result	Units	Dilution Factor	Detection Limit	Code	Run Date
0007201-01A		**SW846 5030A/8015A GRO by GC/FID**							
X00273	XG.2000.796-4		Gasoline Range Organics	0.41	mg / Kg	1	0.25		07/25/00
0007201-01A		**SW846 8260A Purgeable VOCs by GC/MS**							
X00268	XG.2000.788-4	75-34-3	1,1 Dichloroethane	ND	mg / Kg	1	0.005		07/25/00
X00268	XG.2000.788-4	75-34-3	1,1 Dichloroethene	ND	mg / Kg	1	0.005		07/25/00
X00268	XG.2000.788-4	71-55-6	1,1,1 Trichloroethane	ND	mg / Kg	1	0.005		07/25/00
X00268	XG.2000.788-4	630-20-6	1,1,1,2 Tetrachloroethane	ND	mg / Kg	1	0.005		07/25/00
X00268	XG.2000.788-4	79-00-5	1,1,2 Trichloroethane	ND	mg / Kg	1	0.005		07/25/00
X00268	XG.2000.788-4	79-34-5	1,1,2,2 Tetrachloroethane	ND	mg / Kg	1	0.005		07/25/00
X00268	XG.2000.788-4	106-93-4	1,2 Dibromoethane (EDB)	ND	mg / Kg	1	0.005		07/25/00
X00268	XG.2000.788-4	95-50-1	1,2 Dichlorobenzene	ND	mg / Kg	1	0.005		07/25/00
X00268	XG.2000.788-4	107-06-2	1,2 Dichloroethane	ND	mg / Kg	1	0.005		07/25/00
X00268	XG.2000.788-4	78-87-5	1,2 Dichloropropane	ND	mg / Kg	1	0.005		07/25/00
X00268	XG.2000.788-4	96-18-4	1,2,3 Trichloropropane	ND	mg / Kg	1	0.005		07/25/00
X00268	XG.2000.788-4	95-63-6	1,2,4-Trimethylbenzene	ND	mg / Kg	1	0.005		07/25/00
X00268	XG.2000.788-4	541-73-1	1,3 Dichlorobenzene	ND	mg / Kg	1	0.005		07/25/00
X00268	XG.2000.788-4	108-67-8	1,3,5-Trimethylbenzene	ND	mg / Kg	1	0.005		07/25/00
X00268	XG.2000.788-4	764-41-0	1,4 Dichloro-2-butene	ND	mg / Kg	1	0.05		07/25/00
X00268	XG.2000.788-4	106-46-7	1,4 Dichlorobenzene	ND	mg / Kg	1	0.005		07/25/00
X00268	XG.2000.788-4	78-93-3	2-Butanone (MEK)	0.19	mg / Kg	1	0.025		07/25/00
X00268	XG.2000.788-4	110-75-8	2-Chloroethylvinylether	ND	mg / Kg	1	0.025		07/25/00
X00268	XG.2000.788-4	591-78-6	2-Hexanone (MBK)	0.032	mg / Kg	1	0.025		07/25/00
[illegible]8	XG.2000.788-4	108-10-1	4-Methyl-2-pentanone (MIBK)	ND	mg / Kg	1	0.025		07/25/00

Member:
American Council of
Independent Laboratories, Inc.

REPRODUCTION OF THIS REPORT IN LESS THAN FULL REQUIRES THE WRITTEN CONSENT OF AAL
THIS REPORT MAY NOT BE USED IN ANY MANNER BY THE CLIENT OR ANY OTHER THIRD PARTY TO CLAIM
PRODUCT ENDORSEMENT BY ANY ACCREDITATION PROGRAM

Certificate of Analysis

Client: **CH2M HILL**

Project: **0007201** **KAFB**

X00268	XG.2000.788-4	67-64-1	Acetone	0.64	mg / Kg	1	0.05	07/25/00
X00268	XG.2000.788-4	107-02-8	Acrolein	ND	mg / Kg	1	0.1	07/25/00
X00268	XG.2000.788-4	107-13-1	Acrylonitrile	ND	mg / Kg	1	0.1	07/25/00
X00268	XG.2000.788-4	71-43-2	Benzene	ND	mg / Kg	1	0.005	07/25/00
X00268	XG.2000.788-4	75-27-4	Bromodichloromethane	ND	mg / Kg	1	0.005	07/25/00
X00268	XG.2000.788-4	75-25-2	Bromoform	ND	mg / Kg	1	0.005	07/25/00
X00268	XG.2000.788-4	74-83-9	Bromomethane	ND	mg / Kg	1	0.025	07/25/00
X00268	XG.2000.788-4	75-15-0	Carbon disulfide	ND	mg / Kg	1	0.025	07/25/00
X00268	XG.2000.788-4	56-23-5	Carbon tetrachloride	ND	mg / Kg	1	0.005	07/25/00
X00268	XG.2000.788-4	108-90-7	Chlorobenzene	ND	mg / Kg	1	0.005	07/25/00
X00268	XG.2000.788-4	124-48-1	Chlorodibromomethane	ND	mg / Kg	1	0.005	07/25/00
X00268	XG.2000.788-4	75-00-3	Chloroethane	ND	mg / Kg	1	0.025	07/25/00
X00268	XG.2000.788-4	67-66-3	Chloroform	ND	mg / Kg	1	0.005	07/25/00
X00268	XG.2000.788-4	74-87-3	Chloromethane	ND	mg / Kg	1	0.025	07/25/00
X00268	XG.2000.788-4	156-59-2	cis-1,2 dichloroethene	ND	mg / Kg	1	0.005	07/25/00
X00268	XG.2000.788-4	10061-01-5	cis-1,3 dichloropropene	ND	mg / Kg	1	0.005	07/25/00
X00268	XG.2000.788-4	74-95-3	Dibromomethane	ND	mg / Kg	1	0.005	07/25/00
X00268	XG.2000.788-4	97-63-2	Ethyl methacrylate	ND	mg / Kg	1	0.025	07/25/00
X00268	XG.2000.788-4	100-41-4	Ethylbenzene	ND	mg / Kg	1	0.005	07/25/00
X00268	XG.2000.788-4		Freon 113	ND	mg / Kg	1	0.025	07/25/00
X00268	XG.2000.788-4	75-71-8	Freon 12	ND	mg / Kg	1	0.05	07/25/00
X00268	XG.2000.788-4	74-88-4	Iodomethane	ND	mg / Kg	1	0.025	07/25/00
X00268	XG.2000.788-4	1634-04-4	Methyl t-butyl ether (MTBE)	ND	mg / Kg	1	0.005	07/25/[illegible]
X00268	XG.2000.788-4	75-09-2	Methylene chloride	ND	mg / Kg	1	0.05	07/25
X00268	XG.2000.788-4	91-20-3	Naphthalene	ND	mg / Kg	1	0.025	07/25/0[illegible]
X00268	XG.2000.788-4	95-47-6	o-Xylene	ND	mg / Kg	1	0.005	07/25/00
X00268	XG.2000.788-4	108-38-3/106-42	p/m Xylenes	ND	mg / Kg	1	0.01	07/25/00
X00268	XG.2000.788-4	100-42-5	Styrene	ND	mg / Kg	1	0.005	07/25/00
X00268	XG.2000.788-4	156-60-5	t-1,2 Dichloroethene	ND	mg / Kg	1	0.005	07/25/00
X00268	XG.2000.788-4	10061-02-6	t-1,3 Dichloropropene	ND	mg / Kg	1	0.005	07/25/00
X00268	XG.2000.788-4	127-18-4	Tetrachloroethene	ND	mg / Kg	1	0.005	07/25/00
X00268	XG.2000.788-4	108-88-3	Toluene	ND	mg / Kg	1	0.005	07/25/00
X00268	XG.2000.788-4	79-01-6	Trichloroethene	ND	mg / Kg	1	0.005	07/25/00
X00268	XG.2000.788-4	75-69-4	Trichlorofluoromethane	ND	mg / Kg	1	0.025	07/25/00
X00268	XG.2000.788-4	108-05-4	Vinyl acetate	ND	mg / Kg	1	0.025	07/25/00
X00268	XG.2000.788-4	75-01-4	Vinyl chloride	ND	mg / Kg	1	0.025	07/25/00

0007201-01B **SW846 3550A/8270B SVOCs by GC/MS**

X00271	XG.2000.800-8	120-82-1	1,2,4-Trichlorobenzene	ND	mg / Kg	1	0.03	07/27/00
X00271	XG.2000.800-8	95-50-1	1,2-Dichlorobenzene	ND	mg / Kg	1	0.03	07/27/00
X00271	XG.2000.800-8	541-73-1	1,3-Dichlorobenzene	ND	mg / Kg	1	0.03	07/27/00
X00271	XG.2000.800-8	106-46-7	1,4-Dichlorobenzene	ND	mg / Kg	1	0.03	07/27/00
X00271	XG.2000.800-8	90-12-0	1-Methylnaphthalene	ND	mg / Kg	1	0.03	07/27/00
X00271	XG.2000.800-8	58-90-2	2,3,4,6-Tetrachlorophenol	ND	mg / Kg	1	1.5	07/27/00
X00271	XG.2000.800-8	95-95-4	2,4,5-Trichlorophenol	ND	mg / Kg	1	0.3	07/27/00
X00271	XG.2000.800-8	88-06-2	2,4,6-Trichlorophenol	ND	mg / Kg	1	0.3	07/27/00
X00271	XG.2000.800-8	120-83-2	2,4-Dichlorophenol	ND	mg / Kg	1	0.3	07/27/00
X00271	XG.2000.800-8	105-67-9	2,4-Dimethylphenol	ND	mg / Kg	1	0.03	07/27/[illegible]

Certificate of Analysis

t: CH2M HILL
Project: 0007201 KAFB

X00271	XG.2000.800-8	51-28-5	2,4-Dinitrophenol	ND	mg / Kg	1	0.67	07/27/00
X00271	XG.2000.800-8	121-14-2	2,4-Dinitrotoluene	ND	mg / Kg	1	0.3	07/27/00
X00271	XG.2000.800-8	606-20-2	2,6-Dinitrotoluene	ND	mg / Kg	1	0.3	07/27/00
X00271	XG.2000.800-8	91-58-7	2-Chloronaphthalene	ND	mg / Kg	1	0.03	07/27/00
X00271	XG.2000.800-8	95-57-8	2-Chlorophenol	ND	mg / Kg	1	0.03	07/27/00
X00271	XG.2000.800-8	91-57-6	2-Methylnaphthalene	ND	mg / Kg	1	0.03	07/27/00
X00271	XG.2000.800-8	95-48-7	2-Methylphenol	ND	mg / Kg	1	0.03	07/27/00
X00271	XG.2000.800-8	88-74-4	2-Nitroaniline	ND	mg / Kg	1	0.3	07/27/00
X00271	XG.2000.800-8	88-75-5	2-Nitrophenol	ND	mg / Kg	1	0.3	07/27/00
X00271	XG.2000.800-8		3+4 Methylphenol	ND	mg / Kg	1	0.03	07/27/00
X00271	XG.2000.800-8	91-94-1	3,3-Dichlorobenzidine	ND	mg / Kg	1	0.3	07/27/00
X00271	XG.2000.800-8	99-09-2	3-Nitroaniline	ND	mg / Kg	1	0.3	07/27/00
X00271	XG.2000.800-8	534-52-1	4,6-Dinitro-2-methylphenol	ND	mg / Kg	1	0.3	07/27/00
X00271	XG.2000.800-8	101-55-3	4-Bromophenyl-phenylether	ND	mg / Kg	1	0.03	07/27/00
X00271	XG.2000.800-8	59-50-7	4-Chloro-3-methylphenol	ND	mg / Kg	1	0.3	07/27/00
X00271	XG.2000.800-8	106-47-8	4-Chloroaniline	ND	mg / Kg	1	0.3	07/27/00
X00271	XG.2000.800-8	7005-72-3	4-Chlorophenyl-phenylether	ND	mg / Kg	1	0.03	07/27/00
X00271	XG.2000.800-8	100-01-6	4-Nitroaniline	ND	mg / Kg	1	0.3	07/27/00
X00271	XG.2000.800-8	100-02-7	4-Nitrophenol	ND	mg / Kg	1	0.6	07/27/00
X00271	XG.2000.800-8	83-32-9	Acenaphthene	ND	mg / Kg	1	0.03	07/27/00
X00271	XG.2000.800-8	208-96-8	Acenaphthylene	ND	mg / Kg	1	0.03	07/27/00
X00271	XG.2000.800-8	62-53-3	Aniline	ND	mg / Kg	1	0.3	07/27/00
1	XG.2000.800-8	120-12-7	Anthracene	ND	mg / Kg	1	0.03	07/27/00
[illegible]/1	XG.2000.800-8		Azobenzene&1,2-Diphenylhydrazine	ND	mg / Kg	1	0.03	07/27/00
X00271	XG.2000.800-8	56-55-3	Benzo (a) anthracene	ND	mg / Kg	1	0.03	07/27/00
X00271	XG.2000.800-8	50-32-8	Benzo(a)pyrene	ND	mg / Kg	1	0.03	07/27/00
X00271	XG.2000.800-8		Benzo(b & k)fluoranthene	ND	mg / Kg	1	0.03	07/27/00
X00271	XG.2000.800-8	191-24-2	Benzo(g,h,i)perylene	ND	mg / Kg	1	0.3	07/27/00
X00271	XG.2000.800-8	64-85-0	Benzoic acid	ND	mg / Kg	1	3	07/27/00
X00271	XG.2000.800-8	100-51-6	Benzyl alcohol	ND	mg / Kg	1	1.5	07/27/00
X00271	XG.2000.800-8	111-44-4	bis (2-Chloroethyl) ether	ND	mg / Kg	1	0.03	07/27/00
X00271	XG.2000.800-8	111-91-1	bis(2-Chloroethoxy)methane	ND	mg / Kg	1	0.03	07/27/00
X00271	XG.2000.800-8	108-60-1	bis(2-Chloroisopropyl)ether	ND	mg / Kg	1	0.03	07/27/00
X00271	XG.2000.800-8	117-81-7	bis(2-Ethylhexyl)phthalate	ND	mg / Kg	1	0.3	07/27/00
X00271	XG.2000.800-8	85-68-7	Butylbenzylphthalate	ND	mg / Kg	1	0.03	07/27/00
X00271	XG.2000.800-8	218-01-9	Chrysene	ND	mg / Kg	1	0.03	07/27/00
X00271	XG.2000.800-8	84-74-2	di-n-Butylphthalate	ND	mg / Kg	1	0.3	07/27/00
X00271	XG.2000.800-8	117-84-0	di-n-Octylpthalate	ND	mg / Kg	1	0.3	07/27/00
X00271	XG.2000.800-8	53-70-3	Dibenz(a,h)anthracene	ND	mg / Kg	1	0.3	07/27/00
X00271	XG.2000.800-8	132-64-9	Dibenzofuran	ND	mg / Kg	1	0.03	07/27/00
X00271	XG.2000.800-8	84-66-2	Diethylphthalate	ND	mg / Kg	1	0.03	07/27/00
X00271	XG.2000.800-8	131-11-3	Dimethylphthalate	ND	mg / Kg	1	0.03	07/27/00
X00271	XG.2000.800-8	206-44-0	Fluoranthene	ND	mg / Kg	1	0.03	07/27/00
X00271	XG.2000.800-8	86737	Fluorene	ND	mg / Kg	1	0.03	07/27/00
X00271	XG.2000.800-8	118-74-1	Hexachlorobenzene	ND	mg / Kg	1	0.03	07/27/00
X00271	XG.2000.800-8	87-68-3	Hexachlorobutadiene	ND	mg / Kg	1	0.03	07/27/00
X00271	XG.2000.800-8	77-47-4	Hexachlorocyclopentadiene	ND	mg / Kg	1	1.5	07/27/00
1	XG.2000.800-8	67-72-1	Hexachloroethane	ND	mg / Kg	1	0.03	07/27/00

Certificate of Analysis

Client: **CH2M HILL**

Project: **0007201 KAFB**

X00271	XG.2000.800-8	193-39-5	Indeno(1,2,3-cd)pyrene	ND	mg / Kg	1	0.3	07/27/00
X00271	XG.2000.800-8	78-59-1	Isophorone	ND	mg / Kg	1	0.03	07/27/00
X00271	XG.2000.800-8	621-64-7	n-Nitroso-di-n-propylamine	ND	mg / Kg	1	0.03	07/27/00
X00271	XG.2000.800-8	62-75-9	n-Nitroso-dimethyl-amine	ND	mg / Kg	1	0.3	07/27/00
X00271	XG.2000.800-8	86-30-6	n-Nitrosodiphenylamine	ND	mg / Kg	1	0.03	07/27/00
X00271	XG.2000.800-8	91-20-3	Naphthalene	ND	mg / Kg	1	0.03	07/27/00
X00271	XG.2000.800-8	98-95-3	Nitrobenzene	ND	mg / Kg	1	0.03	07/27/00
X00271	XG.2000.800-8	87-86-5	Pentachlorophenol	ND	mg / Kg	1	0.3	07/27/00
X00271	XG.2000.800-8	85-01-8	Phenanthrene	ND	mg / Kg	1	0.03	07/27/00
X00271	XG.2000.800-8	108-95-2	Phenol	ND	mg / Kg	1	0.3	07/27/00
X00271	XG.2000.800-8	129-00-0	Pyrene	ND	mg / Kg	1	0.03	07/27/00
X00271	XG.2000.800-8	110-86-1	Pyridine	ND	mg / Kg	1	0.3	07/27/00

0007201-01B **SW846 ME/8015A Diesel Range Organics by GC/FID**

X00267	XG.2000.784-5		Diesel Range Organics	ND	mg / Kg	1	25	07/24/00

Client Sample ID ***ST106-SB22-200'*** Sample Matrix ***SOIL*** Sample Collected ***07/19/00 11:11.00***

QC Group	Run Sequence	CAS #	Analyte	Result	Units	Dilution Factor	Detection Limit	Code	Run Date
0007201-02A		**SW846 5030A/8015A GRO by GC/FID**							
X00273	XG.2000.796-5		Gasoline Range Organics	0.25	mg / Kg	1	0.25		07/25/00
0007201-02A		**SW846 5030A/8021B Purgeable VOCs by GC/PID**							
X00269	XG.2000.777-2	71-43-2	Benzene	ND	mg / Kg	1	0.005		07/24/00
X00269	XG.2000.777-2	100-41-4	Ethylbenzene	ND	mg / Kg	1	0.005		07/24/00
X00269	XG.2000.777-2	95-47-6	o-Xylene	ND	mg / Kg	1	0.005		07/24/00
X00269	XG.2000.777-2	108-38-3/106-42	p/m-Xylenes	ND	mg / Kg	1	0.01		07/24/00
X00269	XG.2000.777-2	108-88-3	Toluene	ND	mg / Kg	1	0.005		07/24/00
0007201-02B		**SW846 ME/8015A Diesel Range Organics by GC/FID**							
X00267	XG.2000.784-6		Diesel Range Organics	ND	mg / Kg	1	25		07/24/00

Client Sample ID ***ST106-SB22-225'*** Sample Matrix ***SOIL*** Sample Collected ***07/20/00 09:00 00***

QC Group	Run Sequence	CAS #	Analyte	Result	Units	Dilution Factor	Detection Limit	Code	Run Date
0007201-03A		**SW846 5030A/8015A GRO by GC/FID**							
X00273	XG.2000.796-6		Gasoline Range Organics	ND	mg / Kg	1	0.25		07/25/00
0007201-03A		**SW846 8260A Purgeable VOCs by GC/MS**							
X00268	XG.2000.788-2	75-34-3	1,1 Dichloroethane	ND	mg / Kg	1	0.005		07/25/00
X00268	XG.2000.788-2	75-34-3	1,1 Dichloroethene	ND	mg / Kg	1	0.005		07/25/00
X00268	XG.2000.788-2	71-55-6	1,1,1 Trichloroethane	ND	mg / Kg	1	0.005		07/25

Certificate of Analysis

Client: CH2M HILL

Project: 0007201 KAFB

X00268	XG.2000.788-2	630-20-6	1,1,1,2 Tetrachloroethane	ND	mg / Kg	1	0.005	07/25/00
X00268	XG.2000.788-2	79-00-5	1,1,2 Trichloroethane	ND	mg / Kg	1	0.005	07/25/00
X00268	XG.2000.788-2	79-34-5	1,1,2,2 Tetrachloroethane	ND	mg / Kg	1	0.005	07/25/00
X00268	XG.2000.788-2	106-93-4	1,2 Dibromoethane (EDB)	ND	mg / Kg	1	0.005	07/25/00
X00268	XG.2000.788-2	95-50-1	1,2 Dichlorobenzene	ND	mg / Kg	1	0.005	07/25/00
X00268	XG.2000.788-2	107-06-2	1,2 Dichloroethane	ND	mg / Kg	1	0.005	07/25/00
X00268	XG.2000.788-2	78-87-5	1,2 Dichloropropane	ND	mg / Kg	1	0.005	07/25/00
X00268	XG.2000.788-2	96-18-4	1,2,3 Trichloropropane	ND	mg / Kg	1	0.005	07/25/00
X00268	XG.2000.788-2	95-63-6	1,2,4-Trimethylbenzene	ND	mg / Kg	1	0.005	07/25/00
X00268	XG.2000.788-2	541-73-1	1,3 Dichlorobenzene	ND	mg / Kg	1	0.005	07/25/00
X00268	XG.2000.788-2	108-67-8	1,3,5-Trimethylbenzene	ND	mg / Kg	1	0.005	07/25/00
X00268	XG.2000.788-2	764-41-0	1,4 Dichloro-2-butene	ND	mg / Kg	1	0.05	07/25/00
X00268	XG.2000.788-2	106-46-7	1,4 Dichlorobenzene	ND	mg / Kg	1	0.005	07/25/00
X00268	XG.2000.788-2	78-93-3	2-Butanone (MEK)	ND	mg / Kg	1	0.025	07/25/00
X00268	XG.2000.788-2	110-75-8	2-Chloroethylvinylether	ND	mg / Kg	1	0.025	07/25/00
X00268	XG.2000.788-2	591-78-6	2-Hexanone (MBK)	ND	mg / Kg	1	0.025	07/25/00
X00268	XG.2000.788-2	108-10-1	4-Methyl-2-pentanone (MIBK)	ND	mg / Kg	1	0.025	07/25/00
X00268	XG.2000.788-2	67-64-1	Acetone	0.064	mg / Kg	1	0.05	07/25/00
X00268	XG.2000.788-2	107-02-8	Acrolein	ND	mg / Kg	1	0.1	07/25/00
X00268	XG.2000.788-2	107-13-1	Acrylonitrile	ND	mg / Kg	1	0.1	07/25/00
X00268	XG.2000.788-2	71-43-2	Benzene	ND	mg / Kg	1	0.005	07/25/00
X00268	XG.2000.788-2	75-27-4	Bromodichloromethane	ND	mg / Kg	1	0.005	07/25/00
8	XG.2000.788-2	75-25-2	Bromoform	ND	mg / Kg	1	0.005	07/25/00
X00268	XG.2000.788-2	74-83-9	Bromomethane	ND	mg / Kg	1	0.025	07/25/00
X00268	XG.2000.788-2	75-15-0	Carbon disulfide	ND	mg / Kg	1	0.025	07/25/00
X00268	XG.2000.788-2	56-23-5	Carbon tetrachloride	ND	mg / Kg	1	0.005	07/25/00
X00268	XG.2000.788-2	108-90-7	Chlorobenzene	ND	mg / Kg	1	0.005	07/25/00
X00268	XG.2000.788-2	124-48-1	Chlorodibromomethane	ND	mg / Kg	1	0.005	07/25/00
X00268	XG.2000.788-2	75-00-3	Chloroethane	ND	mg / Kg	1	0.025	07/25/00
X00268	XG.2000.788-2	67-66-3	Chloroform	ND	mg / Kg	1	0.005	07/25/00
X00268	XG.2000.788-2	74-87-3	Chloromethane	ND	mg / Kg	1	0.025	07/25/00
X00268	XG.2000.788-2	156-59-2	cis-1,2 dichloroethene	ND	mg / Kg	1	0.005	07/25/00
X00268	XG.2000.788-2	10061-01-5	cis-1,3 dichloropropene	ND	mg / Kg	1	0.005	07/25/00
X00268	XG.2000.788-2	74-95-3	Dibromomethane	ND	mg / Kg	1	0.005	07/25/00
X00268	XG.2000.788-2	97-63-2	Ethyl methacrylate	ND	mg / Kg	1	0.025	07/25/00
X00268	XG.2000.788-2	100-41-4	Ethylbenzene	ND	mg / Kg	1	0.005	07/25/00
X00268	XG.2000.788-2		Freon 113	ND	mg / Kg	1	0.025	07/25/00
X00268	XG.2000.788-2	75-71-8	Freon 12	ND	mg / Kg	1	0.05	07/25/00
X00268	XG.2000.788-2	74-88-4	Iodomethane	ND	mg / Kg	1	0.025	07/25/00
X00268	XG.2000.788-2	1634-04-4	Methyl t-butyl ether (MTBE)	ND	mg / Kg	1	0.005	07/25/00
X00268	XG.2000.788-2	75-09-2	Methylene chloride	ND	mg / Kg	1	0.05	07/25/00
X00268	XG.2000.788-2	91-20-3	Naphthalene	ND	mg / Kg	1	0.025	07/25/00
X00268	XG.2000.788-2	95-47-6	o-Xylene	ND	mg / Kg	1	0.005	07/25/00
X00268	XG.2000.788-2	108-38-3/106-42	p/m Xylenes	ND	mg / Kg	1	0.01	07/25/00
X00268	XG.2000.788-2	100-42-5	Styrene	ND	mg / Kg	1	0.005	07/25/00
X00268	XG.2000.788-2	156-60-5	t-1,2 Dichloroethene	ND	mg / Kg	1	0.005	07/25/00
X00268	XG.2000.788-2	10061-02-6	t-1,3 Dichloropropene	ND	mg / Kg	1	0.005	07/25/00
58	XG.2000.788-2	127-18-4	Tetrachloroethene	ND	mg / Kg	1	0.005	07/25/00

Certificate of Analysis

Client: **CH2M HILL**

Project: **0007201** **KAFB**

X00268	XG.2000.788-2	108-88-3	Toluene	ND	mg / Kg	1	0.005		07/25/0
X00268	XG.2000.788-2	79-01-6	Trichloroethene	ND	mg / Kg	1	0.005		07/25/0
X00268	XG.2000.788-2	75-69-4	Trichlorofluoromethane	ND	mg / Kg	1	0.025		07/25/0
X00268	XG.2000.788-2	108-05-4	Vinyl acetate	ND	mg / Kg	1	0.025		07/25/0
X00268	XG.2000.788-2	75-01-4	Vinyl chloride	ND	mg / Kg	1	0.025		07/25/0

0007201-03B **SW846 ME/8015A Diesel Range Organics by GC/FID**

X00267	XG.2000.784-7		Diesel Range Organics	ND	mg / Kg	1	25		07/24/0

Client Sample ID ***ST106-SB22-230'*** Sample Matrix ***SOIL*** Sample Collected ***07/20/00 09:40:00***

QC Group	Run Sequence	CAS #	Analyte	Result	Units	Dilution Factor	Detection Limit	Code	Run Date
0007201-04A		**SW846 5030A/8015A GRO by GC/FID**							
X00273	XG.2000.796-7		Gasoline Range Organics	ND	mg / Kg	1	0.25		07/25/00
0007201-04A		**SW846 5030A/8021B Purgeable VOCs by GC/PID**							
X00269	XG.2000.777-3	71-43-2	Benzene	ND	mg / Kg	1	0.005		07/24/00
X00269	XG.2000.777-3	100-41-4	Ethylbenzene	ND	mg / Kg	1	0.005		07/24/00
X00269	XG.2000.777-3	95-47-6	o-Xylene	ND	mg / Kg	1	0.005		07/24/00
X00269	XG.2000.777-3	108-38-3/106-42	p/m-Xylenes	ND	mg / Kg	1	0.01		07/24/
X00269	XG.2000.777-3	108-88-3	Toluene	ND	mg / Kg	1	0.005		07/24/00
0007201-04B		**SW846 ME/8015A Diesel Range Organics by GC/FID**							
X00267	XG.2000.784-8		Diesel Range Organics	ND	mg / Kg	1	25		07/24/00

Client Sample ID ***ST106-SB22-250'*** Sample Matrix ***SOIL*** Sample Collected ***07/20/00 12:30:00***

QC Group	Run Sequence	CAS #	Analyte	Result	Units	Dilution Factor	Detection Limit	Code	Run Date
0007201-05A		**SW846 5030A/8015A GRO by GC/FID**							
X00273	XG.2000.796-8		Gasoline Range Organics	ND	mg / Kg	1	0.25		07/25/00
0007201-05A		**SW846 8260A Purgeable VOCs by GC/MS**							
X00268	XG.2000.788-3	75-34-3	1,1 Dichloroethane	ND	mg / Kg	1	0.005		07/25/00
X00268	XG.2000.788-3	75-34-3	1,1 Dichloroethene	ND	mg / Kg	1	0.005		07/25/00
X00268	XG.2000.788-3	71-55-6	1,1,1 Trichloroethane	ND	mg / Kg	1	0.005		07/25/00
X00268	XG.2000.788-3	630-20-6	1,1,1,2 Tetrachloroethane	ND	mg / Kg	1	0.005		07/25/00
X00268	XG.2000.788-3	79-00-5	1,1,2 Trichloroethane	ND	mg / Kg	1	0.005		07/25/00
X00268	XG.2000.788-3	79-34-5	1,1,2,2 Tetrachloroethane	ND	mg / Kg	1	0.005		07/25/00
X00268	XG.2000.788-3	106-93-4	1,2 Dibromoethane (EDB)	ND	mg / Kg	1	0.005		07/25/00
X00268	XG.2000.788-3	95-50-1	1,2 Dichlorobenzene	ND	mg / Kg	1	0.005		07/25/00
X00268	XG.2000.788-3	107-06-2	1,2 Dichloroethane	ND	mg / Kg	1	0.005		07/25/00
X00268	XG.2000.788-3	78-87-5	1,2 Dichloropropane	ND	mg / Kg	1	0.005		07/25/

Certificate of Analysis

Client: CH2M HILL

Project: 0007201 KAFB

X00268	XG.2000.788-3	96-18-4	1,2,3 Trichloropropane	ND	mg / Kg	1	0.005	07/25/00
X00268	XG.2000.788-3	95-63-6	1,2,4-Trimethylbenzene	ND	mg / Kg	1	0.005	07/25/00
X00268	XG.2000.788-3	541-73-1	1,3 Dichlorobenzene	ND	mg / Kg	1	0.005	07/25/00
X00268	XG.2000.788-3	108-67-8	1,3,5-Trimethylbenzene	ND	mg / Kg	1	0.005	07/25/00
X00268	XG.2000.788-3	764-41-0	1,4 Dichloro-2-butene	ND	mg / Kg	1	0.05	07/25/00
X00268	XG.2000.788-3	106-46-7	1,4 Dichlorobenzene	ND	mg / Kg	1	0.005	07/25/00
X00268	XG.2000.788-3	78-93-3	2-Butanone (MEK)	ND	mg / Kg	1	0.025	07/25/00
X00268	XG.2000.788-3	110-75-8	2-Chloroethylvinylether	ND	mg / Kg	1	0.025	07/25/00
X00268	XG.2000.788-3	591-78-6	2-Hexanone (MBK)	ND	mg / Kg	1	0.025	07/25/00
X00268	XG.2000.788-3	108-10-1	4-Methyl-2-pentanone (MIBK)	ND	mg / Kg	1	0.025	07/25/00
X00268	XG.2000.788-3	67-64-1	Acetone	ND	mg / Kg	1	0.05	07/25/00
X00268	XG.2000.788-3	107-02-8	Acrolein	ND	mg / Kg	1	0.1	07/25/00
X00268	XG.2000.788-3	107-13-1	Acrylonitrile	ND	mg / Kg	1	0.1	07/25/00
X00268	XG.2000.788-3	71-43-2	Benzene	ND	mg / Kg	1	0.005	07/25/00
X00268	XG.2000.788-3	75-27-4	Bromodichloromethane	ND	mg / Kg	1	0.005	07/25/00
X00268	XG.2000.788-3	75-25-2	Bromoform	ND	mg / Kg	1	0.005	07/25/00
X00268	XG.2000.788-3	74-83-9	Bromomethane	ND	mg / Kg	1	0.025	07/25/00
X00268	XG.2000.788-3	75-15-0	Carbon disulfide	ND	mg / Kg	1	0.025	07/25/00
X00268	XG.2000.788-3	56-23-5	Carbon tetrachloride	ND	mg / Kg	1	0.005	07/25/00
X00268	XG.2000.788-3	108-90-7	Chlorobenzene	ND	mg / Kg	1	0.005	07/25/00
X00268	XG.2000.788-3	124-48-1	Chlorodibromomethane	ND	mg / Kg	1	0.005	07/25/00
X00268	XG.2000.788-3	75-00-3	Chloroethane	ND	mg / Kg	1	0.025	07/25/00
X00268	XG.2000.788-3	67-66-3	Chloroform	ND	mg / Kg	1	0.005	07/25/00
X00268	XG.2000.788-3	74-87-3	Chloromethane	ND	mg / Kg	1	0.025	07/25/00
X00268	XG.2000.788-3	156-59-2	cis-1,2 dichloroethene	ND	mg / Kg	1	0.005	07/25/00
X00268	XG.2000.788-3	10061-01-5	cis-1,3 dichloropropene	ND	mg / Kg	1	0.005	07/25/00
X00268	XG.2000.788-3	74-95-3	Dibromomethane	ND	mg / Kg	1	0.005	07/25/00
X00268	XG.2000.788-3	97-63-2	Ethyl methacrylate	ND	mg / Kg	1	0.025	07/25/00
X00268	XG.2000.788-3	100-41-4	Ethylbenzene	ND	mg / Kg	1	0.005	07/25/00
X00268	XG.2000.788-3		Freon 113	ND	mg / Kg	1	0.025	07/25/00
X00268	XG.2000.788-3	75-71-8	Freon 12	ND	mg / Kg	1	0.05	07/25/00
X00268	XG.2000.788-3	74-88-4	Iodomethane	ND	mg / Kg	1	0.025	07/25/00
X00268	XG.2000.788-3	1634-04-4	Methyl t-butyl ether (MTBE)	ND	mg / Kg	1	0.005	07/25/00
X00268	XG.2000.788-3	75-09-2	Methylene chloride	ND	mg / Kg	1	0.05	07/25/00
X00268	XG.2000.788-3	91-20-3	Naphthalene	ND	mg / Kg	1	0.025	07/25/00
X00268	XG.2000.788-3	95-47-6	o-Xylene	ND	mg / Kg	1	0.005	07/25/00
X00268	XG.2000.788-3	108-38-3/106-42	p/m Xylenes	ND	mg / Kg	1	0.01	07/25/00
X00268	XG.2000.788-3	100-42-5	Styrene	ND	mg / Kg	1	0.005	07/25/00
X00268	XG.2000.788-3	156-60-5	t-1,2 Dichloroethene	ND	mg / Kg	1	0.005	07/25/00
X00268	XG.2000.788-3	10061-02-6	t-1,3 Dichloropropene	ND	mg / Kg	1	0.005	07/25/00
X00268	XG.2000.788-3	127-18-4	Tetrachloroethene	ND	mg / Kg	1	0.005	07/25/00
X00268	XG.2000.788-3	108-88-3	Toluene	ND	mg / Kg	1	0.005	07/25/00
X00268	XG.2000.788-3	79-01-6	Trichloroethene	ND	mg / Kg	1	0.005	07/25/00
X00268	XG.2000.788-3	75-69-4	Trichlorofluoromethane	ND	mg / Kg	1	0.025	07/25/00
X00268	XG.2000.788-3	108-05-4	Vinyl acetate	ND	mg / Kg	1	0.025	07/25/00
X00268	XG.2000.788-3	75-01-4	Vinyl chloride	ND	mg / Kg	1	0.025	07/25/00

Certificate of Analysis

Client: **CH2M HILL**

Project: **0007201** **KAFB**

0007201-05B **SW846 3550A/8270B SVOCs by GC/MS**

X00271	XG.2000.800-7	120-82-1	1,2,4-Trichlorobenzene	ND	mg / Kg	1	0.03		07/27/00
X00271	XG.2000.800-7	95-50-1	1,2-Dichlorobenzene	ND	mg / Kg	1	0.03		07/27/00
X00271	XG.2000.800-7	541-73-1	1,3-Dichlorobenzene	ND	mg / Kg	1	0.03		07/27/00
X00271	XG.2000.800-7	106-46-7	1,4-Dichlorobenzene	ND	mg / Kg	1	0.03		07/27/00
X00271	XG.2000.800-7	90-12-0	1-Methylnaphthalene	ND	mg / Kg	1	0.03		07/27/00
X00271	XG.2000.800-7	58-90-2	2,3,4,6-Tetrachlorophenol	ND	mg / Kg	1	1.5		07/27/00
X00271	XG.2000.800-7	95-95-4	2,4,5-Trichlorophenol	ND	mg / Kg	1	0.3		07/27/00
X00271	XG.2000.800-7	88-06-2	2,4,6-Trichlorophenol	ND	mg / Kg	1	0.3		07/27/00
X00271	XG.2000.800-7	120-83-2	2,4-Dichlorophenol	ND	mg / Kg	1	0.3		07/27/00
X00271	XG.2000.800-7	105-67-9	2,4-Dimethylphenol	ND	mg / Kg	1	0.03		07/27/00
X00271	XG.2000.800-7	51-28-5	2,4-Dinitrophenol	ND	mg / Kg	1	0.67		07/27/00
X00271	XG.2000.800-7	121-14-2	2,4-Dinitrotoluene	ND	mg / Kg	1	0.3		07/27/00
X00271	XG.2000.800-7	606-20-2	2,6-Dinitrotoluene	ND	mg / Kg	1	0.3		07/27/00
X00271	XG.2000.800-7	91-58-7	2-Chloronaphthalene	ND	mg / Kg	1	0.03		07/27/00
X00271	XG.2000.800-7	95-57-8	2-Chlorophenol	ND	mg / Kg	1	0.03		07/27/00
X00271	XG.2000.800-7	91-57-6	2-Methylnaphthalene	ND	mg / Kg	1	0.03		07/27/00
X00271	XG.2000.800-7	95-48-7	2-Methylphenol	ND	mg / Kg	1	0.03		07/27/00
X00271	XG.2000.800-7	88-74-4	2-Nitroaniline	ND	mg / Kg	1	0.3		07/27/00
X00271	XG.2000.800-7	88-75-5	2-Nitrophenol	ND	mg / Kg	1	0.3		07/27/00
X00271	XG.2000.800-7		3+4 Methylphenol	ND	mg / Kg	1	0.03		07/27/00
X00271	XG.2000.800-7	91-94-1	3,3-Dichlorobenzidine	ND	mg / Kg	1	0.3		07/27/00
X00271	XG.2000.800-7	99-09-2	3-Nitroaniline	ND	mg / Kg	1	0.3		07/27/[illegible]
X00271	XG.2000.800-7	534-52-1	4,6-Dinitro-2-methylphenol	ND	mg / Kg	1	0.3		07/27/0[illegible]
X00271	XG.2000.800-7	101-55-3	4-Bromophenyl-phenylether	ND	mg / Kg	1	0.03		07/27/00
X00271	XG.2000.800-7	59-50-7	4-Chloro-3-methylphenol	ND	mg / Kg	1	0.3		07/27/00
X00271	XG.2000.800-7	106-47-8	4-Chloroaniline	ND	mg / Kg	1	0.3		07/27/00
X00271	XG.2000.800-7	7005-72-3	4-Chlorophenyl-phenylether	ND	mg / Kg	1	0.03		07/27/00
X00271	XG.2000.800-7	100-01-6	4-Nitroaniline	ND	mg / Kg	1	0.3		07/27/00
X00271	XG.2000.800-7	100-02-7	4-Nitrophenol	ND	mg / Kg	1	0.6		07/27/00
X00271	XG.2000.800-7	83-32-9	Acenaphthene	ND	mg / Kg	1	0.03		07/27/00
X00271	XG.2000.800-7	208-96-8	Acenaphthylene	ND	mg / Kg	1	0.03		07/27/00
X00271	XG.2000.800-7	62-53-3	Aniline	ND	mg / Kg	1	0.3		07/27/00
X00271	XG.2000.800-7	120-12-7	Anthracene	ND	mg / Kg	1	0.03		07/27/00
X00271	XG.2000.800-7		Azobenzene&1,2-Diphenylhydrazine	ND	mg / Kg	1	0.03		07/27/00
X00271	XG.2000.800-7	56-55-3	Benzo (a) anthracene	ND	mg / Kg	1	0.03		07/27/00
X00271	XG.2000.800-7	50-32-8	Benzo(a)pyrene	ND	mg / Kg	1	0.03		07/27/00
X00271	XG.2000.800-7		Benzo(b & k)fluoranthene	ND	mg / Kg	1	0.03		07/27/00
X00271	XG.2000.800-7	191-24-2	Benzo(g,h,i)perylene	ND	mg / Kg	1	0.3		07/27/00
X00271	XG.2000.800-7	64-85-0	Benzoic acid	ND	mg / Kg	1	3		07/27/00
X00271	XG.2000.800-7	100-51-6	Benzyl alcohol	ND	mg / Kg	1	1.5		07/27/00
X00271	XG.2000.800-7	111-44-4	bis (2-Chloroethyl) ether	ND	mg / Kg	1	0.03		07/27/00
X00271	XG.2000.800-7	111-91-1	bis(2-Chloroethoxy)methane	ND	mg / Kg	1	0.03		07/27/00
X00271	XG.2000.800-7	108-60-1	bis(2-Chloroisopropyl)ether	ND	mg / Kg	1	0.03		07/27/00
X00271	XG.2000.800-7	117-81-7	bis(2-Ethylhexyl)phthalate	ND	mg / Kg	1	0.3		07/27/00
X00271	XG.2000.800-7	85-68-7	Butylbenzylphthalate	ND	mg / Kg	1	0.03		07/27/00
X00271	XG.2000.800-7	218-01-9	Chrysene	ND	mg / Kg	1	0.03		07/27/00

Certificate of Analysis

ıt: **CH2M HILL**

Project: **0007201** **KAFB**

X00271	XG.2000.800-7	84-74-2	di-n-Butylphthalate	ND	mg / Kg	1	0.3		07/27/00
X00271	XG.2000.800-7	117-84-0	di-n-Octylpthalate	ND	mg / Kg	1	0.3		07/27/00
X00271	XG.2000.800-7	53-70-3	Dibenz(a,h)anthracene	ND	mg / Kg	1	0.3		07/27/00
X00271	XG.2000.800-7	132-64-9	Dibenzofuran	ND	mg / Kg	1	0.03		07/27/00
X00271	XG.2000.800-7	84-66-2	Diethylphthalate	ND	mg / Kg	1	0.03		07/27/00
X00271	XG.2000.800-7	131-11-3	Dimethylphthalate	ND	mg / Kg	1	0.03		07/27/00
X00271	XG.2000.800-7	206-44-0	Fluoranthene	ND	mg / Kg	1	0.03		07/27/00
X00271	XG.2000.800-7	86737	Fluorene	ND	mg / Kg	1	0.03		07/27/00
X00271	XG.2000.800-7	118-74-1	Hexachlorobenzene	ND	mg / Kg	1	0.03		07/27/00
X00271	XG.2000.800-7	87-68-3	Hexachlorobutadiene	ND	mg / Kg	1	0.03		07/27/00
X00271	XG.2000.800-7	77-47-4	Hexachlorocyclopentadiene	ND	mg / Kg	1	1.5		07/27/00
X00271	XG.2000.800-7	67-72-1	Hexachloroethane	ND	mg / Kg	1	0.03		07/27/00
X00271	XG.2000.800-7	193-39-5	Indeno(1,2,3-cd)pyrene	ND	mg / Kg	1	0.3		07/27/00
X00271	XG.2000.800-7	78-59-1	Isophorone	ND	mg / Kg	1	0.03		07/27/00
X00271	XG.2000.800-7	621-64-7	n-Nitroso-di-n-propylamine	ND	mg / Kg	1	0.03		07/27/00
X00271	XG.2000.800-7	62-75-9	n-Nitroso-dimethyl-amine	ND	mg / Kg	1	0.3		07/27/00
X00271	XG.2000.800-7	86-30-6	n-Nitrosodiphenylamine	ND	mg / Kg	1	0.03		07/27/00
X00271	XG.2000.800-7	91-20-3	Naphthalene	ND	mg / Kg	1	0.03		07/27/00
X00271	XG.2000.800-7	98-95-3	Nitrobenzene	ND	mg / Kg	1	0.03		07/27/00
X00271	XG.2000.800-7	87-86-5	Pentachlorophenol	ND	mg / Kg	1	0.3		07/27/00
X00271	XG.2000.800-7	85-01-8	Phenanthrene	ND	mg / Kg	1	0.03		07/27/00
X00271	XG.2000.800-7	108-95-2	Phenol	ND	mg / Kg	1	0.3		07/27/00
71	XG.2000.800-7	129-00-0	Pyrene	ND	mg / Kg	1	0.03		07/27/00
71	XG.2000.800-7	110-86-1	Pyridine	ND	mg / Kg	1	0.3		07/27/00

0007201-05B **SW846 ME/8015A Diesel Range Organics by GC/FID**

X00267	XG.2000.784-9		Diesel Range Organics	ND	mg / Kg	1	25		07/25/00

**** Sample specific Detection Limit is determined by multiplying the sample Dilution Factor by the listed Reporting Detection Limit. ****

**** ND = Not detected: less than the sample specific Detection Limit. Results relate only to the items tested. ****

A[illegible]IGAI
ANALYTICAL
LABORATORIES, INC.

Chain of Custody Record

7300 JEFFERS[illegible] E.
ALBUQUERQUE, NEW [illegible]ICO 87[illegible]
(505) 345-8964

3332 WEDGEWOOD
EL PASO, TEXAS 79925
(915) 593-6000

127 EASTGATE DRIVE, 212-C
LOS ALAMOS, NEW MEXICO 87544
(505) 662-2558

Lab Job No.: 7201 Date 7/20/2000

Page 1 of 1

Client: [illegible]

Address: [illegible]

City / State / Zip: [illegible]

Project Name / Number: [illegible]

Contract / Purchase Order / Quote

Project Manager / Contact: S. MINCHAK

Telephone No.: 8845600

Fax No.: 283 7507

Samplers : (signature): [illegible]

Analysis Required

AAL Fraction Number	Field Sample Number / Location	Date	Time	Sample Type	Type / Size of Container	Preservation Temp.	Preservation Chemical	No. of Containers	GRO	DRO	PTEX	VOC	SVOC					Remarks
[illegible]	[illegible] 22 1400	7/19	[illegible]	Soil	2 x 4oz VOA	Ice	None	2	X	X		X	X					
[illegible]	[illegible] 22 2000	7/19	1111	Soil	2 x 4oz VOA	Ice	None	2	X	X	X							
[illegible]	[illegible] 22 225	7/20	[illegible]	Soil	2 x 4oz VOA	Ice	None	2	X	X		X						
[illegible]	[illegible] 22 230	7/20	0940	Soil	2 x 4oz VOA	Ice	None	2	X	X	X							
[illegible]	[illegible] 22 250	7/20	1230	Soil	2 x 4oz VOA	Ice	None	2	X	X		X	X					

5 SAMPLES

Relinquished by:	Date	Received by:	Relinquished by:	Date	Received by:
Signature: [illegible]	7/20	Signature: [illegible]	Signature:		Signature:
Printed: [illegible]	Time: 1625	Printed: [illegible]	Printed:	Time	Printed:
Company: [illegible]		Company: [illegible]	Company:		Company:
Reason: [illegible]		Reason: [illegible]	Reason:		Reason:

Method of Shipment:

Shipment No.

Special Instructions:

Comments:

After analysis, samples are to be:

- ❑ Disposed of (additional fee)
- ❑ Stored (30 days max)
- ❑ Stored over 30 days (additional fee)
- ❑ Returned to customer

COURIER

ASSAIGAI
ANALYTICAL
LABORATORIES, INC.

7300 Jefferson, NE • Albuquerque, New Mexico 87109 • (505) 345-8964 • FAX (505) 345-7259
3332 Wedgewood Dr., Suite N • El Paso, Texas 79925 • (915) 593-6000 • FAX (915) 593-7820
127 Eastgate Drive, 212-C • Los Alamos, New Mexico 87544 • (505) 662-2555

RECEIVED NOV - 7 2000

Explanation of codes

B	*analyte detected in Method Blank*
E	*result is estimated*
H	*analyzed out of hold time*
N	*tentatively identified compound*
S	*subcontracted*
1-9	*see footnote*

CH2MHILL
attn: **AMY HALLORAN**
6001 INDIAN SCHOOL RD NE STE 350
ALBUQUERQUE, NM 87110-4140

Assaigai Analytical Laboratories, Inc.

Certificate of Analysis

Client: **CH2MHILL**
Project: **0010135** **KAFB ST 106**

William P. Biava: President of Assaigai Analytical Laboratories, Inc.

Client Sample ID ***SB-27-5*** Sample Matrix ***SOIL*** Sample Collected ***10/11/00 17:35:00***

QC Group	Run Sequence	CAS #	Analyte	Result	Units	Dilution Factor	Detection Limit	Code	Run Date
0010135-01A		**SW846 5030A/8015A GRO by GC/FID**							
X00385	XG.2000.1141-2		Gasoline Range Organics	ND	mg / Kg	1	0.25		10/14/00
0010135-01A		**SW846 ME/8015A Diesel Range Organics by GC/FID**							
X00403	XG.2000.1139-4		Diesel Range Organics	ND	mg / Kg	1	25		10/13/00

Client Sample ID ***SB-27-15'*** Sample Matrix ***SOIL*** Sample Collected ***10/12/00 08:40:00***

QC Group	Run Sequence	CAS #	Analyte	Result	Units	Dilution Factor	Detection Limit	Code	Run Date
0010135-02A		**SW846 5030A/8015A GRO by GC/FID**							
X00385	XG.2000.1141-9		Gasoline Range Organics	ND	mg / Kg	1	0.25		10/16/00
0010135-02A		**SW846 ME/8015A Diesel Range Organics by GC/FID**							
X00403	XG.2000.1139-7		Diesel Range Organics	ND	mg / Kg	1	25		10/13/00

Member
American Council of
Independent Laboratories, Inc.

REPRODUCTION OF THIS REPORT IN LESS THAN FULL REQUIRES THE WRITTEN CONSENT OF AAI
THIS REPORT MAY NOT BE USED IN ANY MANNER BY THE CLIENT OR ANY OTHER THIRD PARTY TO CLAIM
PRODUCT ENDORSEMENT BY ANY ACCREDITATION PROGRAM

Assaigai Analytical Laboratories, Inc.

Certificate of Analysis

Client: CH2MHILL

Project: 0010135 KAFB ST 106

Client Sample ID: *SB-27-25'* | Sample Matrix: *SOIL* | Sample Collected: *10/12/00 09:20 00*

QC Group	Run Sequence	CAS #	Analyte	Result	Units	Dilution Factor	Detection Limit	Code	Run Date
0010135-03A		**SW846 5030A/8015A GRO by GC/FID**							
X00385	XG.2000.1141-3		Gasoline Range Organics	ND	mg / Kg	1	0.25		10/14/0(
0010135-03A		**SW846 ME/8015A Diesel Range Organics by GC/FID**							
X00403	XG.2000.1139-8		Diesel Range Organics	ND	mg / Kg	1	25		10/13/0(

Client Sample ID: *SB-27-35'* | Sample Matrix: *SOIL* | Sample Collected: *10/12/00 10:05.00*

QC Group	Run Sequence	CAS #	Analyte	Result	Units	Dilution Factor	Detection Limit	Code	Run Date
0010135-04A		**SW846 5030A/8015A GRO by GC/FID**							
X00385	XG.2000.1141-4		Gasoline Range Organics	ND	mg / Kg	1	0.25		10/14/0(
0010135-04A		**SW846 ME/8015A Diesel Range Organics by GC/FID**							
X00403	XG.2000.1139-9		Diesel Range Organics	ND	mg / Kg	1	25		10/13
0010135-04B		**SW846 5030A/8021B Purgeable VOCs by GC/PID**							
X00392	XG.2000.1156-6	71-43-2	Benzene	ND	mg / Kg	1	0.005	1	10/17/0(
X00392	XG.2000.1156-6	100-41-4	Ethylbenzene	ND	mg / Kg	1	0.005	1	10/17/0(
X00392	XG.2000.1156-6	95-47-6	o-Xylene	ND	mg / Kg	1	0.005	1	10/17/0(
X00392	XG.2000.1156-6	108-38-3/106-42	p/m-Xylenes	ND	mg / Kg	1	0.01	1	10/17/0(
X00392	XG.2000.1156-6	108-88-3	Toluene	ND	mg / Kg	1	0.005	1	10/17/0(

Client Sample ID: *SB-27-45'* | Sample Matrix: *SOIL* | Sample Collected: *10/12/00 11:35.00*

QC Group	Run Sequence	CAS #	Analyte	Result	Units	Dilution Factor	Detection Limit	Code	Run Date
0010135-05A		**SW846 5030A/8015A GRO by GC/FID**							
X00385	XG.2000.1141-5		Gasoline Range Organics	ND	mg / Kg	1	0.25		10/14/0(
0010135-05A		**SW846 ME/8015A Diesel Range Organics by GC/FID**							
X00403	XG.2000.1139-10		Diesel Range Organics	ND	mg / Kg	1	25		10/13/0(
0010135-05B		**SW846 5030A/8021B Purgeable VOCs by GC/PID**							
X00392	XG.2000.1156-7	71-43-2	Benzene	ND	mg / Kg	1	0.005		10/17/0(
X00392	XG.2000.1156-7	100-41-4	Ethylbenzene	ND	mg / Kg	1	0.005		10/17/0(
X00392	XG.2000.1156-7	95-47-6	o-Xylene	ND	mg / Kg	1	0.005		10/17/0(

Certificate of Analysis

t: CH2MHILL

Project: 0010135 KAFB ST 106

X00392	XG.2000.1156-7	108-38-3/106-42	p/m-Xylenes	ND	mg / Kg	1	0.01	10/17/00
X00392	XG.2000.1156-7	108-88-3	Toluene	ND	mg / Kg	1	0.005	10/17/00

Client Sample ID ***EQUIP RINSE*** Sample Matrix ***H2O*** Sample Collected ***10/12/00 14:30:00***

QC Group	Run Sequence	CAS #	Analyte	Result	Units	Dilution Factor	Detection Limit	Code	Run Date
0010135-06A		**SW846 5030A/8015A GRO by GC/FID**							
X00405	XG.2000.1141-13		Gasoline Range Organics	ND	mg / L	1	0.05		10/16/00
0010135-06A		**SW846 ME/8015A Diesel Range Organics by GC/FID**							
X00404	XG.2000.1139-20		Diesel Range Organics	ND	mg / L	1	25		10/14/00
0010135-06B		**SW846 8260A Purgeable VOCs by GC/MS**							
X00388	XG.2000.1160-18	75-34-3	1,1 Dichloroethane	ND	ug / L	1	1		10/18/00
X00388	XG.2000.1160-18	75-34-3	1,1 Dichloroethene	ND	ug / L	1	1		10/18/00
X00388	XG.2000.1160-18	71-55-6	1,1,1 Trichloroethane	ND	ug / L	1	1		10/18/00
X00388	XG.2000.1160-18	630-20-6	1,1,1,2 Tetrachloroethane	ND	ug / L	1	1		10/18/00
X00388	XG.2000.1160-18	79-00-5	1,1,2 Trichloroethane	ND	ug / L	1	1		10/18/00
X00388	XG.2000.1160-18	79-34-5	1,1,2,2 Tetrachloroethane	ND	ug / L	1	1		10/18/00
[illegible]	XG.2000.1160-18	106-93-4	1,2 Dibromoethane (EDB)	ND	ug / L	1	1		10/18/00
X00388	XG.2000.1160-18	95-50-1	1,2 Dichlorobenzene	ND	ug / L	1	1		10/18/00
X00388	XG.2000.1160-18	107-06-2	1,2 Dichloroethane	ND	ug / L	1	1		10/18/00
X00388	XG.2000.1160-18	78-87-5	1,2 Dichloropropane	ND	ug / L	1	1		10/18/00
X00388	XG.2000.1160-18	96-18-4	1,2,3 Trichloropropane	ND	ug / L	1	1		10/18/00
X00388	XG.2000.1160-18	95-63-6	1,2,4-Trimethylbenzene	ND	ug / L	1	1		10/18/00
X00388	XG.2000.1160-18	541-73-1	1,3 Dichlorobenzene	ND	ug / L	1	1		10/18/00
X00388	XG.2000.1160-18	108-67-8	1,3,5-Trimethylbenzene	ND	ug / L	1	1		10/18/00
X00388	XG.2000.1160-18	764-41-0	1,4 Dichloro-2-butene	ND	ug / L	1	10		10/18/00
X00388	XG.2000.1160-18	106-46-7	1,4 Dichlorobenzene	ND	ug / L	1	1		10/18/00
X00388	XG.2000.1160-18	78-93-3	2-Butanone (MEK)	ND	ug / L	1	5		10/18/00
X00388	XG.2000.1160-18	110-75-8	2-Chloroethylvinylether	ND	ug / L	1	5		10/18/00
X00388	XG.2000.1160-18	591-78-6	2-Hexanone (MBK)	ND	ug / L	1	5		10/18/00
X00388	XG.2000.1160-18	108-10-1	4-Methyl-2-pentanone (MIBK)	ND	ug / L	1	5		10/18/00
X00388	XG.2000.1160-18	67-64-1	Acetone	ND	ug / L	1	10		10/18/00
X00388	XG.2000.1160-18	107-02-8	Acrolein	ND	ug / L	1	20		10/18/00
X00388	XG.2000.1160-18	107-13-1	Acrylonitrile	ND	ug / L	1	20		10/18/00
X00388	XG.2000.1160-18	71-43-2	Benzene	ND	ug / L	1	1		10/18/00
X00388	XG.2000.1160-18	75-27-4	Bromodichloromethane	ND	ug / L	1	1		10/18/00
X00388	XG.2000.1160-18	75-25-2	Bromoform	ND	ug / L	1	1		10/18/00
X00388	XG.2000.1160-18	74-83-9	Bromomethane	ND	ug / L	1	5		10/18/00
X00388	XG.2000.1160-18	75-15-0	Carbon disulfide	ND	ug / L	1	5		10/18/00
X00388	XG.2000.1160-18	56-23-5	Carbon tetrachloride	ND	ug / L	1	1		10/18/00
X00388	XG.2000.1160-18	108-90-7	Chlorobenzene	ND	ug / L	1	1		10/18/00
X00388	XG.2000.1160-18	124-48-1	Chlorodibromomethane	ND	ug / L	1	1		10/18/00
X00388	XG.2000.1160-18	75-00-3	Chloroethane	ND	ug / L	1	5		10/18/00

Certificate of Analysis

RECEIVED NOV - 7 2000

Client: **CH2MHILL**

Project: **0010135** **KAFB ST 106**

X00388	XG.2000.1160-18	67-66-3	Chloroform	ND	ug / L	1	1		10/18/00
X00388	XG.2000.1160-18	74-87-3	Chloromethane	ND	ug / L	1	5		10/18/00
X00388	XG.2000.1160-18	156-59-2	cis-1,2 dichloroethene	ND	ug / L	1	1		10/18/00
X00388	XG.2000.1160-18	10061-01-5	cis-1,3 dichloropropene	ND	ug / L	1	1		10/18/00
X00388	XG.2000.1160-18	74-95-3	Dibromomethane	ND	ug / L	1	1		10/18/00
X00388	XG.2000.1160-18	97-63-2	Ethyl methacrylate	ND	ug / L	1	5		10/18/00
X00388	XG.2000.1160-18	100-41-4	Ethylbenzene	ND	ug / L	1	1		10/18/00
X00388	XG.2000.1160-18		Freon 113	ND	ug / L	1	5		10/18/00
X00388	XG.2000.1160-18	75-71-8	Freon 12	ND	ug / L	1	10		10/18/00
X00388	XG.2000.1160-18	74-88-4	Iodomethane	ND	ug / L	1	5		10/18/00
X00388	XG.2000.1160-18	1634-04-4	Methyl t-butyl ether (MTBE)	ND	ug / L	1	1		10/18/00
X00388	XG.2000.1160-18	75-09-2	Methylene chloride	ND	ug / L	1	10		10/18/00
X00388	XG.2000.1160-18	91-20-3	Naphthalene	ND	ug / L	1	5		10/18/00
X00388	XG.2000.1160-18	95-47-6	o-Xylene	ND	ug / L	1	1		10/18/00
X00388	XG.2000.1160-18	108-38-3/106-42	p/m Xylenes	ND	ug / L	1	2		10/18/00
X00388	XG.2000.1160-18	100-42-5	Styrene	ND	ug / L	1	1		10/18/00
X00388	XG.2000.1160-18	156-60-5	t-1,2 Dichloroethene	ND	ug / L	1	1		10/18/00
X00388	XG.2000.1160-18	10061-02-6	t-1,3 Dichloropropene	ND	ug / L	1	1		10/18/00
X00388	XG.2000.1160-18	127-18-4	Tetrachloroethene	ND	ug / L	1	1		10/18/00
X00388	XG.2000.1160-18	108-88-3	Toluene	ND	ug / L	1	1		10/18/00
X00388	XG.2000.1160-18	79-01-6	Trichloroethene	ND	ug / L	1	1		10/18/00
X00388	XG.2000.1160-18	75-69-4	Trichlorofluoromethane	ND	ug / L	1	5		10/18/00
X00388	XG.2000.1160-18	108-05-4	Vinyl acetate	ND	ug / L	1	5		10/18
X00388	XG.2000.1160-18	75-01-4	Vinyl chloride	ND	ug / L	1	5		10/18/00

0010135-06C **SW846 3510B/8270B SVOCs by GC/MS**

X00400	XG.2000.1153-11	120-82-1	1,2,4-Trichlorobenzene	ND	ug / L	1	1		10/16/00
X00400	XG.2000.1153-11	95-50-1	1,2-Dichlorobenzene	ND	ug / L	1	1		10/16/00
X00400	XG.2000.1153-11	541-73-1	1,3-Dichlorobenzene	ND	ug / L	1	1		10/16/00
X00400	XG.2000.1153-11	106-46-7	1,4-Dichlorobenzene	ND	ug / L	1	1		10/16/00
X00400	XG.2000.1153-11	90-12-0	1-Methylnaphthalene	ND	ug / L	1	1		10/16/00
X00400	XG.2000.1153-11	58-90-2	2,3,4,6-Tetrachlorophenol	ND	ug / L	1	5		10/16/00
X00400	XG.2000.1153-11	95-95-4	2,4,5-Trichlorophenol	ND	ug / L	1	5		10/16/00
X00400	XG.2000.1153-11	88-06-2	2,4,6-Trichlorophenol	ND	ug / L	1	5		10/16/00
X00400	XG.2000.1153-11	120-83-2	2,4-Dichlorophenol	ND	ug / L	1	5		10/16/00
X00400	XG.2000.1153-11	105-67-9	2,4-Dimethylphenol	ND	ug / L	1	1		10/16/00
X00400	XG.2000.1153-11	51-28-5	2,4-Dinitrophenol	ND	ug / L	1	10		10/16/00
X00400	XG.2000.1153-11	121-14-2	2,4-Dinitrotoluene	ND	ug / L	1	5		10/16/00
X00400	XG.2000.1153-11	606-20-2	2,6-Dinitrotoluene	ND	ug / L	1	5		10/16/00
X00400	XG.2000.1153-11	91-58-7	2-Chloronaphthalene	ND	ug / L	1	1		10/16/00
X00400	XG.2000.1153-11	95-57-8	2-Chlorophenol	ND	ug / L	1	1		10/16/00
X00400	XG.2000.1153-11	91-57-6	2-Methylnaphthalene	ND	ug / L	1	1		10/16/00
X00400	XG.2000.1153-11	95-48-7	2-Methylphenol	ND	ug / L	1	1		10/16/00
X00400	XG.2000.1153-11	88-74-4	2-Nitroaniline	ND	ug / L	1	5		10/16/00
X00400	XG.2000.1153-11	88-75-5	2-Nitrophenol	ND	ug / L	1	5		10/16/00
X00400	XG.2000.1153-11		3+4 Methylphenol	ND	ug / L	1	1		10/16/00
X00400	XG.2000.1153-11	91-94-1	3,3-Dichlorobenzidine	ND	ug / L	1	10		10/16/00
X00400	XG.2000.1153-11	99-09-2	3-Nitroaniline	ND	ug / L	1	5		10/16/00

Certificate of Analysis

nt: CH2MHILL

Project: 0010135 KAFB ST 106

X00400	XG.2000.1153-11	534-52-1	4,6-Dinitro-2-methylphenol	ND	ug / L	1	10	10/16/00
X00400	XG.2000.1153-11	101-55-3	4-Bromophenyl-phenylether	ND	ug / L	1	1	10/16/00
X00400	XG.2000.1153-11	59-50-7	4-Chloro-3-methylphenol	ND	ug / L	1	5	10/16/00
X00400	XG.2000.1153-11	106-47-8	4-Chloroaniline	ND	ug / L	1	5	10/16/00
X00400	XG.2000.1153-11	7005-72-3	4-Chlorophenyl-phenylether	ND	ug / L	1	1	10/16/00
X00400	XG.2000.1153-11	100-01-6	4-Nitroaniline	ND	ug / L	1	5	10/16/00
X00400	XG.2000.1153-11	100-02-7	4-Nitrophenol	ND	ug / L	1	10	10/16/00
X00400	XG.2000.1153-11	83-32-9	Acenaphthene	ND	ug / L	1	1	10/16/00
X00400	XG.2000.1153-11	208-96-8	Acenaphthylene	ND	ug / L	1	1	10/16/00
X00400	XG.2000.1153-11	62-53-3	Aniline	ND	ug / L	1	10	10/16/00
X00400	XG.2000.1153-11	120-12-7	Anthracene	ND	ug / L	1	1	10/16/00
X00400	XG.2000.1153-11		Azobenzene&1,2-Diphenylhydrazine	ND	ug / L	1	1	10/16/00
X00400	XG.2000.1153-11	56-55-3	Benzo (a) anthracene	ND	ug / L	1	1	10/16/00
X00400	XG.2000.1153-11	50-32-8	Benzo(a)pyrene	ND	ug / L	1	1	10/16/00
X00400	XG.2000.1153-11		Benzo(b & k)fluoranthene	ND	ug / L	1	1	10/16/00
X00400	XG.2000.1153-11	191-24-2	Benzo(g,h,i)perylene	ND	ug / L	1	1	10/16/00
X00400	XG.2000.1153-11	64-85-0	Benzoic acid	ND	ug / L	1	25	10/16/00
X00400	XG.2000.1153-11	100-51-6	Benzyl alcohol	ND	ug / L	1	5	10/16/00
X00400	XG.2000.1153-11	111-44-4	bis (2-Chloroethyl) ether	ND	ug / L	1	1	10/16/00
X00400	XG.2000.1153-11	111-91-1	bis(2-Chloroethoxy)methane	ND	ug / L	1	1	10/16/00
X00400	XG.2000.1153-11	108-60-1	bis(2-Chloroisopropyl)ether	ND	ug / L	1	1	10/16/00
X00400	XG.2000.1153-11	117-81-7	bis(2-Ethylhexyl)phthalate	ND	ug / L	1	5	10/16/00
0	XG.2000.1153-11	85-68-7	Butylbenzylphthalate	ND	ug / L	1	1	10/16/00
X00400	XG.2000.1153-11	218-01-9	Chrysene	ND	ug / L	1	1	10/16/00
X00400	XG.2000.1153-11	84-74-2	di-n-Butylphthalate	ND	ug / L	1	1	10/16/00
X00400	XG.2000.1153-11	117-84-0	di-n-Octylpthalate	ND	ug / L	1	1	10/16/00
X00400	XG.2000.1153-11	53-70-3	Dibenz(a,h)anthracene	ND	ug / L	1	1	10/16/00
X00400	XG.2000.1153-11	132-64-9	Dibenzofuran	ND	ug / L	1	1	10/16/00
X00400	XG.2000.1153-11	84-66-2	Diethylphthalate	ND	ug / L	1	1	10/16/00
X00400	XG.2000.1153-11	131-11-3	Dimethylphthalate	ND	ug / L	1	1	10/16/00
X00400	XG.2000.1153-11	206-44-0	Fluoranthene	ND	ug / L	1	1	10/16/00
X00400	XG.2000.1153-11	86737	Fluorene	ND	ug / L	1	1	10/16/00
X00400	XG.2000.1153-11	118-74-1	Hexachlorobenzene	ND	ug / L	1	10	10/16/00
X00400	XG.2000.1153-11	87-68-3	Hexachlorobutadiene	ND	ug / L	1	10	10/16/00
X00400	XG.2000.1153-11	77-47-4	Hexachlorocyclopentadiene	ND	ug / L	1	10	10/16/00
X00400	XG.2000.1153-11	67-72-1	Hexachloroethane	ND	ug / L	1	5	10/16/00
X00400	XG.2000.1153-11	193-39-5	Indeno(1,2,3-cd)pyrene	ND	ug / L	1	1	10/16/00
X00400	XG.2000.1153-11	78-59-1	Isophorone	ND	ug / L	1	1	10/16/00
X00400	XG.2000.1153-11	621-64-7	n-Nitroso-di-n-propylamine	ND	ug / L	1	1	10/16/00
X00400	XG.2000.1153-11	62-75-9	n-Nitroso-dimethyl-amine	ND	ug / L	1	10	10/16/00
X00400	XG.2000.1153-11	86-30-6	n-Nitrosodiphenylamine	ND	ug / L	1	1	10/16/00
X00400	XG.2000.1153-11	91-20-3	Naphthalene	ND	ug / L	1	1	10/16/00
X00400	XG.2000.1153-11	98-95-3	Nitrobenzene	ND	ug / L	1	1	10/16/00
X00400	XG.2000.1153-11	87-86-5	Pentachlorophenol	ND	ug / L	1	10	10/16/00
X00400	XG.2000.1153-11	85-01-8	Phenanthrene	ND	ug / L	1	1	10/16/00
X00400	XG.2000.1153-11	108-95-2	Phenol	ND	ug / L	1	10	10/16/00
X00400	XG.2000.1153-11	129-00-0	Pyrene	ND	ug / L	1	1	10/16/00
X00400	XG.2000.1153-11	110-86-1	Pyridine	ND	ug / L	1	10	10/16/00

Certificate of Analysis

Client: CH2MHILL
Project: 0010135 KAFB ST 106

Client Sample ID: SB-27-55' | Sample Matrix: SOIL | Sample Collected: 10/12/00 13:56 00

QC Group	Run Sequence	CAS #	Analyte	Result	Units	Dilution Factor	Detection Limit	Code	Run Date
0010135-07A		SW846 5030A/8015A GRO by GC/FID							
X00385	XG.2000.1141-6		Gasoline Range Organics	ND	mg / Kg	1	0.25		10/14/00
0010135-07A		SW846 ME/8015A Diesel Range Organics by GC/FID							
X00403	XG.2000.1139-11		Diesel Range Organics	ND	mg / Kg	1	25		10/13/00

Client Sample ID: TRIP BLANK | Sample Matrix: H2O | Sample Collected: 10/12 00

QC Group	Run Sequence	CAS #	Analyte	Result	Units	Dilution Factor	Detection Limit	Code	Run Date
0010135-08A		SW846 8260A Purgeable VOCs by GC/MS							
X00388	XG.2000.1160-12	75-34-3	1,1 Dichloroethane	ND	ug / L	1	1		10/13/00
X00388	XG.2000.1160-12	75-34-3	1,1 Dichloroethene	ND	ug / L	1	1		10/13/00
X00388	XG.2000.1160-12	71-55-6	1,1,1 Trichloroethane	ND	ug / L	1	1		10/13
X00388	XG.2000.1160-12	630-20-6	1,1,1,2 Tetrachloroethane	ND	ug / L	1	1		10/13/00
X00388	XG.2000.1160-12	79-00-5	1,1,2 Trichloroethane	ND	ug / L	1	1		10/13/00
X00388	XG.2000.1160-12	79-34-5	1,1,2,2 Tetrachloroethane	ND	ug / L	1	1		10/13/00
X00388	XG.2000.1160-12	106-93-4	1,2 Dibromoethane (EDB)	ND	ug / L	1	1		10/13/00
X00388	XG.2000.1160-12	95-50-1	1,2 Dichlorobenzene	ND	ug / L	1	1		10/13/00
X00388	XG.2000.1160-12	107-06-2	1,2 Dichloroethane	ND	ug / L	1	1		10/13/00
X00388	XG.2000.1160-12	78-87-5	1,2 Dichloropropane	ND	ug / L	1	1		10/13/00
X00388	XG.2000.1160-12	96-18-4	1,2,3 Trichloropropane	ND	ug / L	1	1		10/13/00
X00388	XG.2000.1160-12	95-63-6	1,2,4-Trimethylbenzene	ND	ug / L	1	1		10/13/00
X00388	XG.2000.1160-12	541-73-1	1,3 Dichlorobenzene	ND	ug / L	1	1		10/13/00
X00388	XG.2000.1160-12	108-67-8	1,3,5-Trimethylbenzene	ND	ug / L	1	1		10/13/00
X00388	XG.2000.1160-12	764-41-0	1,4 Dichloro-2-butene	ND	ug / L	1	10		10/13/00
X00388	XG.2000.1160-12	106-46-7	1,4 Dichlorobenzene	ND	ug / L	1	1		10/13/00
X00388	XG.2000.1160-12	78-93-3	2-Butanone (MEK)	ND	ug / L	1	5		10/13/00
X00388	XG.2000.1160-12	110-75-8	2-Chloroethylvinylether	ND	ug / L	1	5		10/13/00
X00388	XG.2000.1160-12	591-78-6	2-Hexanone (MBK)	ND	ug / L	1	5		10/13/00
X00388	XG.2000.1160-12	108-10-1	4-Methyl-2-pentanone (MIBK)	ND	ug / L	1	5		10/13/00
X00388	XG.2000.1160-12	67-64-1	Acetone	ND	ug / L	1	10		10/13/00
X00388	XG.2000.1160-12	107-02-8	Acrolein	ND	ug / L	1	20		10/13/00
X00388	XG.2000.1160-12	107-13-1	Acrylonitrile	ND	ug / L	1	20		10/13/00
X00388	XG.2000.1160-12	71-43-2	Benzene	ND	ug / L	1	1		10/13/00
X00388	XG.2000.1160-12	75-27-4	Bromodichloromethane	ND	ug / L	1	1		10/13/00
X00388	XG.2000.1160-12	75-25-2	Bromoform	ND	ug / L	1	1		10/13/00
X00388	XG.2000.1160-12	74-83-9	Bromomethane	ND	ug / L	1	5		10/13/00
X00388	XG.2000.1160-12	75-15-0	Carbon disulfide	ND	ug / L	1	5		10/13/00

Certificate of Analysis

ıt: CH2MHILL

Project: 0010135 KAFB ST 106

X00388	XG.2000.1160-12	56-23-5	Carbon tetrachloride	ND	ug / L	1	1		10/13/00
X00388	XG.2000.1160-12	108-90-7	Chlorobenzene	ND	ug / L	1	1		10/13/00
X00388	XG.2000.1160-12	124-48-1	Chlorodibromomethane	ND	ug / L	1	1		10/13/00
X00388	XG.2000.1160-12	75-00-3	Chloroethane	ND	ug / L	1	5		10/13/00
X00388	XG.2000.1160-12	67-66-3	Chloroform	ND	ug / L	1	1		10/13/00
X00388	XG.2000.1160-12	74-87-3	Chloromethane	ND	ug / L	1	5		10/13/00
X00388	XG.2000.1160-12	156-59-2	cis-1,2 dichloroethene	ND	ug / L	1	1		10/13/00
X00388	XG.2000.1160-12	10061-01-5	cis-1,3 dichloropropene	ND	ug / L	1	1		10/13/00
X00388	XG.2000.1160-12	74-95-3	Dibromomethane	ND	ug / L	1	1		10/13/00
X00388	XG.2000.1160-12	97-63-2	Ethyl methacrylate	ND	ug / L	1	5		10/13/00
X00388	XG.2000.1160-12	100-41-4	Ethylbenzene	ND	ug / L	1	1		10/13/00
X00388	XG.2000.1160-12		Freon 113	ND	ug / L	1	5		10/13/00
X00388	XG.2000.1160-12	75-71-8	Freon 12	ND	ug / L	1	10		10/13/00
X00388	XG.2000.1160-12	74-88-4	Iodomethane	ND	ug / L	1	5		10/13/00
X00388	XG.2000.1160-12	1634-04-4	Methyl t-butyl ether (MTBE)	ND	ug / L	1	1		10/13/00
X00388	XG.2000.1160-12	75-09-2	Methylene chloride	ND	ug / L	1	10		10/13/00
X00388	XG.2000.1160-12	91-20-3	Naphthalene	ND	ug / L	1	5		10/13/00
X00388	XG.2000.1160-12	95-47-6	o-Xylene	ND	ug / L	1	1		10/13/00
X00388	XG.2000.1160-12	108-38-3/106-42	p/m Xylenes	ND	ug / L	1	2		10/13/00
X00388	XG.2000.1160-12	100-42-5	Styrene	ND	ug / L	1	1		10/13/00
X00388	XG.2000.1160-12	156-60-5	t-1,2 Dichloroethene	ND	ug / L	1	1		10/13/00
X00388	XG.2000.1160-12	10061-02-6	t-1,3 Dichloropropene	ND	ug / L	1	1		10/13/00
X00388	XG.2000.1160-12	127-18-4	Tetrachloroethene	ND	ug / L	1	1		10/13/00
X00388	XG.2000.1160-12	108-88-3	Toluene	ND	ug / L	1	1		10/13/00
X00388	XG.2000.1160-12	79-01-6	Trichloroethene	ND	ug / L	1	1		10/13/00
X00388	XG.2000.1160-12	75-69-4	Trichlorofluoromethane	ND	ug / L	1	5		10/13/00
X00388	XG.2000.1160-12	108-05-4	Vinyl acetate	ND	ug / L	1	5		10/13/00
X00388	XG.2000.1160-12	75-01-4	Vinyl chloride	ND	ug / L	1	5		10/13/00

Client Sample ID ***SB-27-65*** Sample Matrix ***SOIL*** Sample Collected ***10/12/00 15:17:00***

QC Group	Run Sequence	CAS #	Analyte	Result	Units	Dilution Factor	Detection Limit	Code	Run Date
0010135-09A		**SW846 5030A/8015A GRO by GC/FID**							
X00385	XG.2000.1141-7		Gasoline Range Organics	ND	mg / Kg	1	0.25		10/14/00
0010135-09A		**SW846 ME/8015A Diesel Range Organics by GC/FID**							
X00403	XG.2000.1139-12		Diesel Range Organics	ND	mg / Kg	1	25		10/13/00
0010135-09B		**SW846 8260A Purgeable VOCs by GC/MS**							
X00398	XG.2000.1158-16	75-34-3	1,1 Dichloroethane	ND	mg / Kg	1	0.005	1	10/17/00
X00398	XG.2000.1158-16	75-34-3	1,1 Dichloroethene	ND	mg / Kg	1	0.005	1	10/17/00
X00398	XG.2000.1158-16	71-55-6	1,1,1 Trichloroethane	ND	mg / Kg	1	0.005	1	10/17/00
X00398	XG.2000.1158-16	630-20-6	1,1,1,2 Tetrachloroethane	ND	mg / Kg	1	0.005	1	10/17/00
X00398	XG.2000.1158-16	79-00-5	1,1,2 Trichloroethane	ND	mg / Kg	1	0.005	1	10/17/00
X00398	XG.2000.1158-16	79-34-5	1,1,2,2 Tetrachloroethane	ND	mg / Kg	1	0.005	1	10/17/00

Certificate of Analysis

Client: CH2MHILL

Project: 0010135 KAFB ST 106

X00398	XG.2000.1158-16	106-93-4	1,2 Dibromoethane (EDB)	ND	mg / Kg	1	0.005	1	10/17/0(
X00398	XG.2000.1158-16	95-50-1	1,2 Dichlorobenzene	ND	mg / Kg	1	0.005	1	10/17/0(
X00398	XG.2000.1158-16	107-06-2	1,2 Dichloroethane	ND	mg / Kg	1	0.005	1	10/17/0(
X00398	XG.2000.1158-16	78-87-5	1,2 Dichloropropane	ND	mg / Kg	1	0.005	1	10/17/0(
X00398	XG.2000.1158-16	96-18-4	1,2,3 Trichloropropane	ND	mg / Kg	1	0.005	1	10/17/0(
X00398	XG.2000.1158-16	95-63-6	1,2,4-Trimethylbenzene	ND	mg / Kg	1	0.005	1	10/17/0(
X00398	XG.2000.1158-16	541-73-1	1,3 Dichlorobenzene	ND	mg / Kg	1	0.005	1	10/17/0(
X00398	XG.2000.1158-16	108-67-8	1,3,5-Trimethylbenzene	ND	mg / Kg	1	0.005	1	10/17/0(
X00398	XG.2000.1158-16	764-41-0	1,4 Dichloro-2-butene	ND	mg / Kg	1	0.05	1	10/17/0(
X00398	XG.2000.1158-16	106-46-7	1,4 Dichlorobenzene	ND	mg / Kg	1	0.005	1	10/17/0(
X00398	XG.2000.1158-16	78-93-3	2-Butanone (MEK)	ND	mg / Kg	1	0.025	1	10/17/0(
X00398	XG.2000.1158-16	110-75-8	2-Chloroethylvinylether	ND	mg / Kg	1	0.025	1	10/17/0(
X00398	XG.2000.1158-16	591-78-6	2-Hexanone (MBK)	ND	mg / Kg	1	0.025	1	10/17/0(
X00398	XG.2000.1158-16	108-10-1	4-Methyl-2-pentanone (MIBK)	ND	mg / Kg	1	0.025	1	10/17/0(
X00398	XG.2000.1158-16	67-64-1	Acetone	ND	mg / Kg	1	0.05	1	10/17/0(
X00398	XG.2000.1158-16	107-02-8	Acrolein	ND	mg / Kg	1	0.1	1	10/17/0(
X00398	XG.2000.1158-16	107-13-1	Acrylonitrile	ND	mg / Kg	1	0.1	1	10/17/0(
X00398	XG.2000.1158-16	71-43-2	Benzene	ND	mg / Kg	1	0.005	1	10/17/0(
X00398	XG.2000.1158-16	75-27-4	Bromodichloromethane	ND	mg / Kg	1	0.005	1	10/17/0(
X00398	XG.2000.1158-16	75-25-2	Bromoform	ND	mg / Kg	1	0.005	1	10/17/0(
X00398	XG.2000.1158-16	74-83-9	Bromomethane	ND	mg / Kg	1	0.025	1	10/17/0(
X00398	XG.2000.1158-16	75-15-0	Carbon disulfide	ND	mg / Kg	1	0.025	1	10/17/0(
X00398	XG.2000.1158-16	56-23-5	Carbon tetrachloride	ND	mg / Kg	1	0.005	1	10/17/
X00398	XG.2000.1158-16	108-90-7	Chlorobenzene	ND	mg / Kg	1	0.005	1	10/17/
X00398	XG.2000.1158-16	124-48-1	Chlorodibromomethane	ND	mg / Kg	1	0.005	1	10/17/0(
X00398	XG.2000.1158-16	75-00-3	Chloroethane	ND	mg / Kg	1	0.025	1	10/17/00
X00398	XG.2000.1158-16	67-66-3	Chloroform	ND	mg / Kg	1	0.005	1	10/17/00
X00398	XG.2000.1158-16	74-87-3	Chloromethane	ND	mg / Kg	1	0.025	1	10/17/0(
X00398	XG.2000.1158-16	156-59-2	cis-1,2 dichloroethene	ND	mg / Kg	1	0.005	1	10/17/0(
X00398	XG.2000.1158-16	10061-01-5	cis-1,3 dichloropropene	ND	mg / Kg	1	0.005	1	10/17/0(
X00398	XG.2000.1158-16	74-95-3	Dibromomethane	ND	mg / Kg	1	0.005	1	10/17/0(
X00398	XG.2000.1158-16	97-63-2	Ethyl methacrylate	ND	mg / Kg	1	0.025	1	10/17/0(
X00398	XG.2000.1158-16	100-41-4	Ethylbenzene	ND	mg / Kg	1	0.005	1	10/17/00
X00398	XG.2000.1158-16		Freon 113	ND	mg / Kg	1	0.025	1	10/17/00
X00398	XG.2000.1158-16	75-71-8	Freon 12	ND	mg / Kg	1	0.05	1	10/17/00
X00398	XG.2000.1158-16	74-88-4	Iodomethane	ND	mg / Kg	1	0.025	1	10/17/0(
X00398	XG.2000.1158-16	1634-04-4	Methyl t-butyl ether (MTBE)	ND	mg / Kg	1	0.005	1	10/17/0(
X00398	XG.2000.1158-16	75-09-2	Methylene chloride	ND	mg / Kg	1	0.05	1	10/17/0(
X00398	XG.2000.1158-16	91-20-3	Naphthalene	ND	mg / Kg	1	0.025	1	10/17/0(
X00398	XG.2000.1158-16	95-47-6	o-Xylene	ND	mg / Kg	1	0.005	1	10/17/0(
X00398	XG.2000.1158-16	108-38-3/106-42	p/m Xylenes	ND	mg / Kg	1	0.01	1	10/17/0(
X00398	XG.2000.1158-16	100-42-5	Styrene	ND	mg / Kg	1	0.005	1	10/17/0(
X00398	XG.2000.1158-16	156-60-5	t-1,2 Dichloroethene	ND	mg / Kg	1	0.005	1	10/17/0(
X00398	XG.2000.1158-16	10061-02-6	t-1,3 Dichloropropene	ND	mg / Kg	1	0.005	1	10/17/0(
X00398	XG.2000.1158-16	127-18-4	Tetrachloroethene	ND	mg / Kg	1	0.005	1	10/17/0(
X00398	XG.2000.1158-16	108-88-3	Toluene	ND	mg / Kg	1	0.005	1	10/17/0(
X00398	XG.2000.1158-16	79-01-6	Trichloroethene	ND	mg / Kg	1	0.005	1	10/17/0(
X00398	XG.2000.1158-16	75-69-4	Trichlorofluoromethane	ND	mg / Kg	1	0.025	1	10/17/

Certificate of Analysis

t: CH2MHILL

Project: 0010135 KAFB ST 106

X00398	XG.2000.1158-16	108-05-4	Vinyl acetate	ND	mg / Kg	1	0.025	1	10/17/00
X00398	XG.2000.1158-16	75-01-4	Vinyl chloride	ND	mg / Kg	1	0.025	1	10/17/00

0010135-09C SW846 3550A/8270B SVOCs by GC/MS

X00367	XG.2000.1146-2	120-82-1	1,2,4-Trichlorobenzene	ND	mg / Kg	1	0.03	2	10/16/00
X00367	XG.2000.1146-2	95-50-1	1,2-Dichlorobenzene	ND	mg / Kg	1	0.03	2	10/16/00
X00367	XG.2000.1146-2	541-73-1	1,3-Dichlorobenzene	ND	mg / Kg	1	0.03	2	10/16/00
X00367	XG.2000.1146-2	106-46-7	1,4-Dichlorobenzene	ND	mg / Kg	1	0.03	2	10/16/00
X00367	XG.2000.1146-2	90-12-0	1-Methylnaphthalene	ND	mg / Kg	1	0.03	2	10/16/00
X00367	XG.2000.1146-2	58-90-2	2,3,4,6-Tetrachlorophenol	ND	mg / Kg	1	1.5	2	10/16/00
X00367	XG.2000.1146-2	95-95-4	2,4,5-Trichlorophenol	ND	mg / Kg	1	0.3	2	10/16/00
X00367	XG.2000.1146-2	88-06-2	2,4,6-Trichlorophenol	ND	mg / Kg	1	0.3	2	10/16/00
X00367	XG.2000.1146-2	120-83-2	2,4-Dichlorophenol	ND	mg / Kg	1	0.3	2	10/16/00
X00367	XG.2000.1146-2	105-67-9	2,4-Dimethylphenol	ND	mg / Kg	1	0.03	2	10/16/00
X00367	XG.2000.1146-2	51-28-5	2,4-Dinitrophenol	ND	mg / Kg	1	0.67	2	10/16/00
X00367	XG.2000.1146-2	121-14-2	2,4-Dinitrotoluene	ND	mg / Kg	1	0.3	2	10/16/00
X00367	XG.2000.1146-2	606-20-2	2,6-Dinitrotoluene	ND	mg / Kg	1	0.3	2	10/16/00
X00367	XG.2000.1146-2	91-58-7	2-Chloronaphthalene	ND	mg / Kg	1	0.03	2	10/16/00
X00367	XG.2000.1146-2	95-57-8	2-Chlorophenol	ND	mg / Kg	1	0.03	2	10/16/00
X00367	XG.2000.1146-2	91-57-6	2-Methylnaphthalene	ND	mg / Kg	1	0.03	2	10/16/00
X00367	XG.2000.1146-2	95-48-7	2-Methylphenol	ND	mg / Kg	1	0.03	2	10/16/00
X00367	XG.2000.1146-2	88-74-4	2-Nitroaniline	ND	mg / Kg	1	0.3	2	10/16/00
[illegible]7	XG.2000.1146-2	88-75-5	2-Nitrophenol	ND	mg / Kg	1	0.3	2	10/16/00
[illegible]/	XG.2000.1146-2		3+4 Methylphenol	ND	mg / Kg	1	0.03	2	10/16/00
X00367	XG.2000.1146-2	91-94-1	3,3-Dichlorobenzidine	ND	mg / Kg	1	0.3	2	10/16/00
X00367	XG.2000.1146-2	99-09-2	3-Nitroaniline	ND	mg / Kg	1	0.3	2	10/16/00
X00367	XG.2000.1146-2	534-52-1	4,6-Dinitro-2-methylphenol	ND	mg / Kg	1	0.3	2	10/16/00
X00367	XG.2000.1146-2	101-55-3	4-Bromophenyl-phenylether	ND	mg / Kg	1	0.03	2	10/16/00
X00367	XG.2000.1146-2	59-50-7	4-Chloro-3-methylphenol	ND	mg / Kg	1	0.3	2	10/16/00
X00367	XG.2000.1146-2	106-47-8	4-Chloroaniline	ND	mg / Kg	1	0.3	2	10/16/00
X00367	XG.2000.1146-2	7005-72-3	4-Chlorophenyl-phenylether	ND	mg / Kg	1	0.03	2	10/16/00
X00367	XG.2000.1146-2	100-01-6	4-Nitroaniline	ND	mg / Kg	1	0.3	2	10/16/00
X00367	XG.2000.1146-2	100-02-7	4-Nitrophenol	ND	mg / Kg	1	0.6	2	10/16/00
X00367	XG.2000.1146-2	83-32-9	Acenaphthene	ND	mg / Kg	1	0.03	2	10/16/00
X00367	XG.2000.1146-2	208-96-8	Acenaphthylene	ND	mg / Kg	1	0.03	2	10/16/00
X00367	XG.2000.1146-2	62-53-3	Aniline	ND	mg / Kg	1	0.3	2	10/16/00
X00367	XG.2000.1146-2	120-12-7	Anthracene	ND	mg / Kg	1	0.03	2	10/16/00
X00367	XG.2000.1146-2		Azobenzene&1,2-Diphenylhydrazine	ND	mg / Kg	1	0.03	2	10/16/00
X00367	XG.2000.1146-2	56-55-3	Benzo (a) anthracene	ND	mg / Kg	1	0.03	2	10/16/00
X00367	XG.2000.1146-2	50-32-8	Benzo(a)pyrene	ND	mg / Kg	1	0.03	2	10/16/00
X00367	XG.2000.1146-2		Benzo(b & k)fluoranthene	ND	mg / Kg	1	0.03	2	10/16/00
X00367	XG.2000.1146-2	191-24-2	Benzo(g,h,i)perylene	ND	mg / Kg	1	0.3	2	10/16/00
X00367	XG.2000.1146-2	64-85-0	Benzoic acid	ND	mg / Kg	1	3	2	10/16/00
X00367	XG.2000.1146-2	100-51-6	Benzyl alcohol	ND	mg / Kg	1	1.5	2	10/16/00
X00367	XG.2000.1146-2	111-44-4	bis (2-Chloroethyl) ether	ND	mg / Kg	1	0.03	2	10/16/00
X00367	XG.2000.1146-2	111-91-1	bis(2-Chloroethoxy)methane	ND	mg / Kg	1	0.03	2	10/16/00
X00367	XG.2000.1146-2	108-60-1	bis(2-Chloroisopropyl)ether	ND	mg / Kg	1	0.03	2	10/16/00
[illegible]7	XG.2000.1146-2	117-81-7	bis(2-Ethylhexyl)phthalate	ND	mg / Kg	1	0.3	2	10/16/00

Certificate of Analysis

Client: **CH2MHILL**

Project: **0010135** **KAFB ST 106**

X00367	XG.2000.1146-2	85-68-7	Butylbenzylphthalate	ND	mg / Kg	1	0.03	2	10/16/00
X00367	XG.2000.1146-2	218-01-9	Chrysene	ND	mg / Kg	1	0.03	2	10/16/00
X00367	XG.2000.1146-2	84-74-2	di-n-Butylphthalate	ND	mg / Kg	1	0.3	2	10/16/00
X00367	XG.2000.1146-2	117-84-0	di-n-Octylpthalate	ND	mg / Kg	1	0.3	2	10/16/00
X00367	XG.2000.1146-2	53-70-3	Dibenz(a,h)anthracene	ND	mg / Kg	1	0.3	2	10/16/00
X00367	XG.2000.1146-2	132-64-9	Dibenzofuran	ND	mg / Kg	1	0.03	2	10/16/00
X00367	XG.2000.1146-2	84-66-2	Diethylphthalate	ND	mg / Kg	1	0.03	2	10/16/00
X00367	XG.2000.1146-2	131-11-3	Dimethylphthalate	ND	mg / Kg	1	0.03	2	10/16/00
X00367	XG.2000.1146-2	206-44-0	Fluoranthene	ND	mg / Kg	1	0.03	2	10/16/00
X00367	XG.2000.1146-2	86737	Fluorene	ND	mg / Kg	1	0.03	2	10/16/00
X00367	XG.2000.1146-2	118-74-1	Hexachlorobenzene	ND	mg / Kg	1	0.03	2	10/16/00
X00367	XG.2000.1146-2	87-68-3	Hexachlorobutadiene	ND	mg / Kg	1	0.03	2	10/16/00
X00367	XG.2000.1146-2	77-47-4	Hexachlorocyclopentadiene	ND	mg / Kg	1	1.5	2	10/16/00
X00367	XG.2000.1146-2	67-72-1	Hexachloroethane	ND	mg / Kg	1	0.03	2	10/16/00
X00367	XG.2000.1146-2	193-39-5	Indeno(1,2,3-cd)pyrene	ND	mg / Kg	1	0.3	2	10/16/00
X00367	XG.2000.1146-2	78-59-1	Isophorone	ND	mg / Kg	1	0.03	2	10/16/00
X00367	XG.2000.1146-2	621-64-7	n-Nitroso-di-n-propylamine	ND	mg / Kg	1	0.03	2	10/16/00
X00367	XG.2000.1146-2	62-75-9	n-Nitroso-dimethyl-amine	ND	mg / Kg	1	0.3	2	10/16/00
X00367	XG.2000.1146-2	86-30-6	n-Nitrosodiphenylamine	ND	mg / Kg	1	0.03	2	10/16/00
X00367	XG.2000.1146-2	91-20-3	Naphthalene	ND	mg / Kg	1	0.03	2	10/16/00
X00367	XG.2000.1146-2	98-95-3	Nitrobenzene	ND	mg / Kg	1	0.03	2	10/16/00
X00367	XG.2000.1146-2	87-86-5	Pentachlorophenol	ND	mg / Kg	1	0.3	2	10/16/00
X00367	XG.2000.1146-2	85-01-8	Phenanthrene	ND	mg / Kg	1	0.03	2	10/16/0
X00367	XG.2000.1146-2	108-95-2	Phenol	ND	mg / Kg	1	0.3	2	10/16/
X00367	XG.2000.1146-2	129-00-0	Pyrene	ND	mg / Kg	1	0.03	2	10/16/00
X00367	XG.2000.1146-2	110-86-1	Pyridine	ND	mg / Kg	1	0.3	2	10/16/00

**** Sample specific Detection Limit is determined by multiplying the sample Dilution Factor by the listed Reporting Detection Limit. ****

**** ND = Not detected: less than the sample specific Detection Limit. Results relate only to the items tested. ****

footnote

1 The sample had headspace at the time of analysis.

2 This sample was utilized for matrix spike and spike duplicate analysis. Please note that some of the spike recoveries and RPDs were out of criteria due to interferences in the sample matrix. This should be taken into account when reviewing the data.

Assaigai Analytical Laboratories, Inc.

Quality Control Summary

RECEIVED NOV - 7 2000

Explanation of codes

D *Not applicable due to sample dilution*
L *Not applicable due to MDL proximity*

nt: **CH2MHILL**
ject: **0010135** **KAFB ST 106**

QC Type **LCS: Lab Control Spike** QC Matrix **SOLID**

QC Group	Run Sequence	CAS #	Analyte	Result	Units	Dilution Factor	Detection Limit	Code	Run Date
X00367-002		**SW846 3550A/8270B SVOCs by GC/MS**							
X00367	XG.2000.1078-5	120-82-1	1,2,4-Trichlorobenzene	80	% Recovery	1	NA		09/29/00
X00367	XG.2000.1078-5	106-46-7	1,4-Dichlorobenzene	79	% Recovery	1	NA		09/29/00
X00367	XG.2000.1078-5	121-14-2	2,4-Dinitrotoluene	78	% Recovery	1	NA		09/29/00
X00367	XG.2000.1078-5	95-57-8	2-Chlorophenol	92	% Recovery	1	NA		09/29/00
X00367	XG.2000.1078-5	59-50-7	4-Chloro-3-methylphenol	86	% Recovery	1	NA		09/29/00
X00367	XG.2000.1078-5	100-02-7	4-Nitrophenol	92	% Recovery	1	NA		09/29/00
X00367	XG.2000.1078-5	83-32-9	Acenaphthene	88	% Recovery	1	NA		09/29/00
X00367	XG.2000.1078-5	117-84-0	di-n-Octylpthalate	90	% Recovery	1	NA		09/29/00
X00367	XG.2000.1078-5	621-64-7	n-Nitroso-di-n-propylamine	78	% Recovery	1	NA		09/29/00
X00367	XG.2000.1078-5	87-86-5	Pentachlorophenol	92	% Recovery	1	NA		09/29/00
X00367	XG.2000.1078-5	108-95-2	Phenol	85	% Recovery	1	NA		09/29/00
X00367	XG.2000.1078-5	129-00-0	Pyrene	88	% Recovery	1	NA		09/29/00
X00385-002		**SW846 5030A/8015A GRO by GC/FID**							
X00385	XG.2000.1096-2		Gasoline Range Organics	105	% Recovery	1	NA		10/02/00
X00392-002		**SW846 5030A/8021B Purgeable VOCs by GC/PID**							
2	XG.2000.1112-2	71-43-2	Benzene	101	% Recovery	1	NA		10/05/00
X00392	XG.2000.1112-2	100-41-4	Ethylbenzene	103	% Recovery	1	NA		10/05/00
X00392	XG.2000.1112-2	95-47-6	o-Xylene	100	% Recovery	1	NA		10/05/00
X00392	XG.2000.1112-2	108-38-3/106-42	p/m-Xylenes	103	% Recovery	1	NA		10/05/00
X00392	XG.2000.1112-2	108-88-3	Toluene	100	% Recovery	1	NA		10/05/00
X00398-005		**SW846 8260A Purgeable VOCs by GC/MS**							
X00398	XG.2000.1158-3	75-34-3	1,1 Dichloroethene	108	% Recovery	1	NA		10/10/00
X00398	XG.2000.1206-2	75-34-3	1,1 Dichloroethene	108	% Recovery	1	NA		10/10/00
X00398	XG.2000.1158-3	106-46-7	1,4 Dichlorobenzene	99	% Recovery	1	NA		10/10/00
X00398	XG.2000.1206-2	106-46-7	1,4 Dichlorobenzene	99	% Recovery	1	NA		10/10/00
X00398	XG.2000.1158-3	71-43-2	Benzene	108	% Recovery	1	NA		10/10/00
X00398	XG.2000.1206-2	71-43-2	Benzene	108	% Recovery	1	NA		10/10/00
X00398	XG.2000.1158-3	108-90-7	Chlorobenzene	105	% Recovery	1	NA		10/10/00
X00398	XG.2000.1206-2	108-90-7	Chlorobenzene	105	% Recovery	1	NA		10/10/00
X00398	XG.2000.1158-3	108-88-3	Toluene	106	% Recovery	1	NA		10/10/00
X00398	XG.2000.1206-2	108-88-3	Toluene	106	% Recovery	1	NA		10/10/00
X00398	XG.2000.1158-3	79-01-6	Trichloroethene	108	% Recovery	1	NA		10/10/00
X00398	XG.2000.1206-2	79-01-6	Trichloroethene	108	% Recovery	1	NA		10/10/00
X00403-002		**SW846 ME/8015A Diesel Range Organics by GC/FID**							
X00403	XG.2000.1139-2		Diesel Range Organics	108	% Recovery	1	NA		10/13/00

Quality Control Summary

Client: CH2MHILL

Project: 0010135 KAFB ST 106

Explanation of codes

D Not applicable due to sample dilu

L Not applicable due to MDL proxim

QC Type: **LCSD: Lab Control Spike Duplicate Accuracy** QC Matrix: **SOLID**

QC Group	Run Sequence	CAS #	Analyte	Result	Units	Dilution Factor	Detection Limit	Code	Run Date
X00367-003		**SW846 3550A/8270B SVOCs by GC/MS**							
X00367	XG.2000.1078-6	120-82-1	1,2,4-Trichlorobenzene	76	% Recovery	1	NA		09/29/0
X00367	XG.2000.1078-6	106-46-7	1,4-Dichlorobenzene	74	% Recovery	1	NA		09/29/0
X00367	XG.2000.1078-6	121-14-2	2,4-Dinitrotoluene	77	% Recovery	1	NA		09/29/0
X00367	XG.2000.1078-6	95-57-8	2-Chlorophenol	87	% Recovery	1	NA		09/29/0
X00367	XG.2000.1078-6	59-50-7	4-Chloro-3-methylphenol	83	% Recovery	1	NA		09/29/0
X00367	XG.2000.1078-6	100-02-7	4-Nitrophenol	92	% Recovery	1	NA		09/29/0
X00367	XG.2000.1078-6	83-32-9	Acenaphthene	86	% Recovery	1	NA		09/29/0
X00367	XG.2000.1078-6	117-84-0	di-n-Octylpthalate	87	% Recovery	1	NA		09/29/0
X00367	XG.2000.1078-6	621-64-7	n-Nitroso-di-n-propylamine	76	% Recovery	1	NA		09/29/0
X00367	XG.2000.1078-6	87-86-5	Pentachlorophenol	89	% Recovery	1	NA		09/29/0
X00367	XG.2000.1078-6	108-95-2	Phenol	81	% Recovery	1	NA		09/29/0
X00367	XG.2000.1078-6	129-00-0	Pyrene	87	% Recovery	1	NA		09/29/0
X00385-003		**SW846 5030A/8015A GRO by GC/FID**							
X00385	XG.2000.1096-3		Gasoline Range Organics	100	% Recovery	1	NA		10/02/0
X00392-003		**SW846 5030A/8021B Purgeable VOCs by GC/PID**							
X00392	XG.2000.1112-3	71-43-2	Benzene	107	% Recovery	1	NA		10/0
X00392	XG.2000.1112-3	100-41-4	Ethylbenzene	109	% Recovery	1	NA		10/05/0
X00392	XG.2000.1112-3	95-47-6	o-Xylene	108	% Recovery	1	NA		10/05/0
X00392	XG.2000.1112-3	108-38-3/106-42	p/m-Xylenes	109	% Recovery	1	NA		10/05/0
X00392	XG.2000.1112-3	108-88-3	Toluene	106	% Recovery	1	NA		10/05/0
X00398-006		**SW846 8260A Purgeable VOCs by GC/MS**							
X00398	XG.2000.1158-4	75-34-3	1,1 Dichloroethene	105	% Recovery	1	NA		10/10/0
X00398	XG.2000.1206-3	75-34-3	1,1 Dichloroethene	105	% Recovery	1	NA		10/10/0
X00398	XG.2000.1158-4	106-46-7	1,4 Dichlorobenzene	99	% Recovery	1	NA		10/10/0
X00398	XG.2000.1206-3	106-46-7	1,4 Dichlorobenzene	99	% Recovery	1	NA		10/10/0
X00398	XG.2000.1158-4	71-43-2	Benzene	107	% Recovery	1	NA		10/10/0
X00398	XG.2000.1206-3	71-43-2	Benzene	107	% Recovery	1	NA		10/10/0
X00398	XG.2000.1158-4	108-90-7	Chlorobenzene	104	% Recovery	1	NA		10/10/0
X00398	XG.2000.1206-3	108-90-7	Chlorobenzene	104	% Recovery	1	NA		10/10/0
X00398	XG.2000.1158-4	108-88-3	Toluene	104	% Recovery	1	NA		10/10/0
X00398	XG.2000.1206-3	108-88-3	Toluene	104	% Recovery	1	NA		10/10/0
X00398	XG.2000.1158-4	79-01-6	Trichloroethene	108	% Recovery	1	NA		10/10/0
X00398	XG.2000.1206-3	79-01-6	Trichloroethene	108	% Recovery	1	NA		10/10/0
X00403-003		**SW846 ME/8015A Diesel Range Organics by GC/FID**							
X00403	XG.2000.1139-3		Diesel Range Organics	101	% Recovery	1	NA		10/13/0

Quality Control Summary

Client: CH2MHILL

Project: 0010135 KAFB ST 106

Explanation of codes

D Not applicable due to sample dilution

L Not applicable due to MDL proximity

QC Type: **LCSD: Lab Control Spike Duplicate Precision**

QC Matrix: **SOLID**

QC Group	Run Sequence	CAS #	Analyte	Result	Units	Dilution Factor	Detection Limit	Code	Run Date
X00367-003		**SW846 3550A/8270B SVOCs by GC/MS**							
X00367	XG.2000.1078-6	120-82-1	1,2,4-Trichlorobenzene	5	RPD	1	NA		09/29/00
X00367	XG.2000.1078-6	106-46-7	1,4-Dichlorobenzene	6	RPD	1	NA		09/29/00
X00367	XG.2000.1078-6	121-14-2	2,4-Dinitrotoluene	1	RPD	1	NA		09/29/00
X00367	XG.2000.1078-6	95-57-8	2-Chlorophenol	5	RPD	1	NA		09/29/00
X00367	XG.2000.1078-6	59-50-7	4-Chloro-3-methylphenol	4	RPD	1	NA		09/29/00
X00367	XG.2000.1078-6	100-02-7	4-Nitrophenol	< 1	RPD	1	NA		09/29/00
X00367	XG.2000.1078-6	83-32-9	Acenaphthene	3	RPD	1	NA		09/29/00
X00367	XG.2000.1078-6	117-84-0	di-n-Octylpthalate	2	RPD	1	NA		09/29/00
X00367	XG.2000.1078-6	621-64-7	n-Nitroso-di-n-propylamine	3	RPD	1	NA		09/29/00
X00367	XG.2000.1078-6	87-86-5	Pentachlorophenol	3	RPD	1	NA		09/29/00
X00367	XG.2000.1078-6	108-95-2	Phenol	4	RPD	1	NA		09/29/00
X00367	XG.2000.1078-6	129-00-0	Pyrene	2	RPD	1	NA		09/29/00
X00385-003		**SW846 5030A/8015A GRO by GC/FID**							
X00385	XG.2000.1096-3		Gasoline Range Organics	4	RPD	1	NA		10/02/00
X00392-003		**SW846 5030A/8021B Purgeable VOCs by GC/PID**							
2	XG.2000.1112-3	71-43-2	Benzene	6	RPD	1	NA		10/05/00
X00392	XG.2000.1112-3	100-41-4	Ethylbenzene	6	RPD	1	NA		10/05/00
X00392	XG.2000.1112-3	95-47-6	o-Xylene	8	RPD	1	NA		10/05/00
X00392	XG.2000.1112-3	108-38-3/106-42	p/m-Xylenes	6	RPD	1	NA		10/05/00
X00392	XG.2000.1112-3	108-88-3	Toluene	6	RPD	1	NA		10/05/00
X00398-006		**SW846 8260A Purgeable VOCs by GC/MS**							
X00398	XG.2000.1158-4	75-34-3	1,1 Dichloroethene	3	RPD	1	NA		10/10/00
X00398	XG.2000.1206-3	75-34-3	1,1 Dichloroethene	3	RPD	1	NA		10/10/00
X00398	XG.2000.1158-4	106-46-7	1,4 Dichlorobenzene	< 1	RPD	1	NA		10/10/00
X00398	XG.2000.1206-3	106-46-7	1,4 Dichlorobenzene	< 1	RPD	1	NA		10/10/00
X00398	XG.2000.1158-4	71-43-2	Benzene	< 1	RPD	1	NA		10/10/00
X00398	XG.2000.1206-3	71-43-2	Benzene	< 1	RPD	1	NA		10/10/00
X00398	XG.2000.1158-4	108-90-7	Chlorobenzene	2	RPD	1	NA		10/10/00
X00398	XG.2000.1206-3	108-90-7	Chlorobenzene	2	RPD	1	NA		10/10/00
X00398	XG.2000.1158-4	108-88-3	Toluene	1	RPD	1	NA		10/10/00
X00398	XG.2000.1206-3	108-88-3	Toluene	1	RPD	1	NA		10/10/00
X00398	XG.2000.1158-4	79-01-6	Trichloroethene	< 1	RPD	1	NA		10/10/00
X00398	XG.2000.1206-3	79-01-6	Trichloroethene	< 1	RPD	1	NA		10/10/00
X00403-003		**SW846 ME/8015A Diesel Range Organics by GC/FID**							
X00403	XG.2000.1139-3		Diesel Range Organics	7	RPD	1	NA		10/13/00

Quality Control Summary

Client: CH2MHILL

Project: 0010135 KAFB ST 106

Explanation of codes

D *Not applicable due to sample dilut*

L *Not applicable due to MDL proxim*

QC Type **MB: Method Blank** QC Matrix **SOLID**

QC Group	Run Sequence	CAS #	Analyte	Result	Units	Dilution Factor	Detection Limit	Code	Run Date
X00367-001		**SW846 3550A/8270B SVOCs by GC/MS**							
X00367	XG.2000.1078-4	120-82-1	1,2,4-Trichlorobenzene	ND	mg / Kg	1	0.03		09/29/00
X00367	XG.2000.1078-4	95-50-1	1,2-Dichlorobenzene	ND	mg / Kg	1	0.03		09/29/00
X00367	XG.2000.1078-4	541-73-1	1,3-Dichlorobenzene	ND	mg / Kg	1	0.03		09/29/00
X00367	XG.2000.1078-4	106-46-7	1,4-Dichlorobenzene	ND	mg / Kg	1	0.03		09/29/00
X00367	XG.2000.1078-4	90-12-0	1-Methylnaphthalene	ND	mg / Kg	1	0.03		09/29/00
X00367	XG.2000.1078-4	58-90-2	2,3,4,6-Tetrachlorophenol	ND	mg / Kg	1	1.5		09/29/00
X00367	XG.2000.1078-4	95-95-4	2,4,5-Trichlorophenol	ND	mg / Kg	1	0.3		09/29/00
X00367	XG.2000.1078-4	88-06-2	2,4,6-Trichlorophenol	ND	mg / Kg	1	0.3		09/29/00
X00367	XG.2000.1078-4	120-83-2	2,4-Dichlorophenol	ND	mg / Kg	1	0.3		09/29/00
X00367	XG.2000.1078-4	105-67-9	2,4-Dimethylphenol	ND	mg / Kg	1	0.03		09/29/00
X00367	XG.2000.1078-4	51-28-5	2,4-Dinitrophenol	ND	mg / Kg	1	0.67		09/29/00
X00367	XG.2000.1078-4	121-14-2	2,4-Dinitrotoluene	ND	mg / Kg	1	0.3		09/29/00
X00367	XG.2000.1078-4	606-20-2	2,6-Dinitrotoluene	ND	mg / Kg	1	0.3		09/29/00
X00367	XG.2000.1078-4	91-58-7	2-Chloronaphthalene	ND	mg / Kg	1	0.03		09/29/00
X00367	XG.2000.1078-4	95-57-8	2-Chlorophenol	ND	mg / Kg	1	0.03		09/29/00
X00367	XG.2000.1078-4	91-57-6	2-Methylnaphthalene	ND	mg / Kg	1	0.03		09/29/00
X00367	XG.2000.1078-4	95-48-7	2-Methylphenol	ND	mg / Kg	1	0.03		09/29/
X00367	XG.2000.1078-4	88-74-4	2-Nitroaniline	ND	mg / Kg	1	0.3		09/29/0
X00367	XG.2000.1078-4	88-75-5	2-Nitrophenol	ND	mg / Kg	1	0.3		09/29/00
X00367	XG.2000.1078-4		3+4 Methylphenol	ND	mg / Kg	1	0.03		09/29/00
X00367	XG.2000.1078-4	91-94-1	3,3-Dichlorobenzidine	ND	mg / Kg	1	0.3		09/29/00
X00367	XG.2000.1078-4	99-09-2	3-Nitroaniline	ND	mg / Kg	1	0.3		09/29/00
X00367	XG.2000.1078-4	534-52-1	4,6-Dinitro-2-methylphenol	ND	mg / Kg	1	0.3		09/29/00
X00367	XG.2000.1078-4	101-55-3	4-Bromophenyl-phenylether	ND	mg / Kg	1	0.03		09/29/00
X00367	XG.2000.1078-4	59-50-7	4-Chloro-3-methylphenol	ND	mg / Kg	1	0.3		09/29/00
X00367	XG.2000.1078-4	106-47-8	4-Chloroaniline	ND	mg / Kg	1	0.3		09/29/00
X00367	XG.2000.1078-4	7005-72-3	4-Chlorophenyl-phenylether	ND	mg / Kg	1	0.03		09/29/00
X00367	XG.2000.1078-4	100-01-6	4-Nitroaniline	ND	mg / Kg	1	0.3		09/29/00
X00367	XG.2000.1078-4	100-02-7	4-Nitrophenol	ND	mg / Kg	1	0.6		09/29/00
X00367	XG.2000.1078-4	83-32-9	Acenaphthene	ND	mg / Kg	1	0.03		09/29/00
X00367	XG.2000.1078-4	208-96-8	Acenaphthylene	ND	mg / Kg	1	0.03		09/29/00
X00367	XG.2000.1078-4	62-53-3	Aniline	ND	mg / Kg	1	0.3		09/29/00
X00367	XG.2000.1078-4	120-12-7	Anthracene	ND	mg / Kg	1	0.03		09/29/00
X00367	XG.2000.1078-4		Azobenzene&1,2-Diphenylhydrazine	ND	mg / Kg	1	0.03		09/29/00
X00367	XG.2000.1078-4	56-55-3	Benzo (a) anthracene	ND	mg / Kg	1	0.03		09/29/00
X00367	XG.2000.1078-4	50-32-8	Benzo(a)pyrene	ND	mg / Kg	1	0.03		09/29/00
X00367	XG.2000.1078-4		Benzo(b & k)fluoranthene	ND	mg / Kg	1	0.03		09/29/00
X00367	XG.2000.1078-4	191-24-2	Benzo(g,h,i)perylene	ND	mg / Kg	1	0.3		09/29/00
X00367	XG.2000.1078-4	64-85-0	Benzoic acid	ND	mg / Kg	1	3		09/29/00
X00367	XG.2000.1078-4	100-51-6	Benzyl alcohol	ND	mg / Kg	1	1.5		09/29/00
X00367	XG.2000.1078-4	111-44-4	bis (2-Chloroethyl) ether	ND	mg / Kg	1	0.03		09/29/00
X00367	XG.2000.1078-4	111-91-1	bis(2-Chloroethoxy)methane	ND	mg / Kg	1	0.03		09/29/

Quality Control Summary

Client: **CH2MHILL**

Project: **0010135** **KAFB ST 106**

Explanation of codes

D *Not applicable due to sample dilution*

L *Not applicable due to MDL proximity*

X00367	XG.2000.1078-4	108-60-1	bis(2-Chloroisopropyl)ether	ND	mg / Kg	1	0.03	09/29/00
X00367	XG.2000.1078-4	117-81-7	bis(2-Ethylhexyl)phthalate	ND	mg / Kg	1	0.3	09/29/00
X00367	XG.2000.1078-4	85-68-7	Butylbenzylphthalate	ND	mg / Kg	1	0.03	09/29/00
X00367	XG.2000.1078-4	218-01-9	Chrysene	ND	mg / Kg	1	0.03	09/29/00
X00367	XG.2000.1078-4	84-74-2	di-n-Butylphthalate	ND	mg / Kg	1	0.3	09/29/00
X00367	XG.2000.1078-4	117-84-0	di-n-Octylpthalate	ND	mg / Kg	1	0.3	09/29/00
X00367	XG.2000.1078-4	53-70-3	Dibenz(a,h)anthracene	ND	mg / Kg	1	0.3	09/29/00
X00367	XG.2000.1078-4	132-64-9	Dibenzofuran	ND	mg / Kg	1	0.03	09/29/00
X00367	XG.2000.1078-4	84-66-2	Diethylphthalate	ND	mg / Kg	1	0.03	09/29/00
X00367	XG.2000.1078-4	131-11-3	Dimethylphthalate	ND	mg / Kg	1	0.03	09/29/00
X00367	XG.2000.1078-4	206-44-0	Fluoranthene	ND	mg / Kg	1	0.03	09/29/00
X00367	XG.2000.1078-4	86737	Fluorene	ND	mg / Kg	1	0.03	09/29/00
X00367	XG.2000.1078-4	118-74-1	Hexachlorobenzene	ND	mg / Kg	1	0.03	09/29/00
X00367	XG.2000.1078-4	87-68-3	Hexachlorobutadiene	ND	mg / Kg	1	0.03	09/29/00
X00367	XG.2000.1078-4	77-47-4	Hexachlorocyclopentadiene	ND	mg / Kg	1	1.5	09/29/00
X00367	XG.2000.1078-4	67-72-1	Hexachloroethane	ND	mg / Kg	1	0.03	09/29/00
X00367	XG.2000.1078-4	193-39-5	Indeno(1,2,3-cd)pyrene	ND	mg / Kg	1	0.3	09/29/00
X00367	XG.2000.1078-4	78-59-1	Isophorone	ND	mg / Kg	1	0.03	09/29/00
X00367	XG.2000.1078-4	621-64-7	n-Nitroso-di-n-propylamine	ND	mg / Kg	1	0.03	09/29/00
X00367	XG.2000.1078-4	62-75-9	n-Nitroso-dimethyl-amine	ND	mg / Kg	1	0.3	09/29/00
X00367	XG.2000.1078-4	86-30-6	n-Nitrosodiphenylamine	ND	mg / Kg	1	0.03	09/29/00
X00367	XG.2000.1078-4	91-20-3	Naphthalene	ND	mg / Kg	1	0.03	09/29/00
X00367	XG.2000.1078-4	98-95-3	Nitrobenzene	ND	mg / Kg	1	0.03	09/29/00
[illegible]7	XG.2000.1078-4	87-86-5	Pentachlorophenol	ND	mg / Kg	1	0.3	09/29/00
[illegible]67	XG.2000.1078-4	85-01-8	Phenanthrene	ND	mg / Kg	1	0.03	09/29/00
X00367	XG.2000.1078-4	108-95-2	Phenol	ND	mg / Kg	1	0.3	09/29/00
X00367	XG.2000.1078-4	129-00-0	Pyrene	ND	mg / Kg	1	0.03	09/29/00
X00367	XG.2000.1078-4	110-86-1	Pyridine	ND	mg / Kg	1	0.3	09/29/00
X00367-022		**SW846 3550A/8270B SVOCs by GC/MS**						
X00367	XG.2000.1111-5	120-82-1	1,2,4-Trichlorobenzene	ND	mg / Kg	1	0.03	10/05/00
X00367	XG.2000.1111-5	95-50-1	1,2-Dichlorobenzene	ND	mg / Kg	1	0.03	10/05/00
X00367	XG.2000.1111-5	541-73-1	1,3-Dichlorobenzene	ND	mg / Kg	1	0.03	10/05/00
X00367	XG.2000.1111-5	106-46-7	1,4-Dichlorobenzene	ND	mg / Kg	1	0.03	10/05/00
X00367	XG.2000.1111-5	90-12-0	1-Methylnaphthalene	ND	mg / Kg	1	0.03	10/05/00
X00367	XG.2000.1111-5	58-90-2	2,3,4,6-Tetrachlorophenol	ND	mg / Kg	1	1.5	10/05/00
X00367	XG.2000.1111-5	95-95-4	2,4,5-Trichlorophenol	ND	mg / Kg	1	0.3	10/05/00
X00367	XG.2000.1111-5	88-06-2	2,4,6-Trichlorophenol	ND	mg / Kg	1	0.3	10/05/00
X00367	XG.2000.1111-5	120-83-2	2,4-Dichlorophenol	ND	mg / Kg	1	0.3	10/05/00
X00367	XG.2000.1111-5	105-67-9	2,4-Dimethylphenol	ND	mg / Kg	1	0.03	10/05/00
X00367	XG.2000.1111-5	51-28-5	2,4-Dinitrophenol	ND	mg / Kg	1	0.67	10/05/00
X00367	XG.2000.1111-5	121-14-2	2,4-Dinitrotoluene	ND	mg / Kg	1	0.3	10/05/00
X00367	XG.2000.1111-5	606-20-2	2,6-Dinitrotoluene	ND	mg / Kg	1	0.3	10/05/00
X00367	XG.2000.1111-5	91-58-7	2-Chloronaphthalene	ND	mg / Kg	1	0.03	10/05/00
X00367	XG.2000.1111-5	95-57-8	2-Chlorophenol	ND	mg / Kg	1	0.03	10/05/00
X00367	XG.2000.1111-5	91-57-6	2-Methylnaphthalene	ND	mg / Kg	1	0.03	10/05/00
X00367	XG.2000.1111-5	95-48-7	2-Methylphenol	ND	mg / Kg	1	0.03	10/05/00
X00367	XG.2000.1111-5	88-74-4	2-Nitroaniline	ND	mg / Kg	1	0.3	10/05/00
X00367	XG.2000.1111-5	88-75-5	2-Nitrophenol	ND	mg / Kg	1	0.3	10/05/00
[illegible]67	XG.2000.1111-5		3+4 Methylphenol	ND	mg / Kg	1	0.03	10/05/00
[illegible]67	XG.2000.1111-5	91-94-1	3,3-Dichlorobenzidine	ND	mg / Kg	1	0.3	10/05/00

Quality Control Summary

Client: **CH2MHILL**

Project: **0010135** **KAFB ST 106**

Explanation of codes

D *Not applicable due to sample dilu*

L *Not applicable due to MDL proxim*

X00367	XG.2000.1111-5	99-09-2	3-Nitroaniline	ND	mg / Kg	1	0.3	10/05/0
X00367	XG.2000.1111-5	534-52-1	4,6-Dinitro-2-methylphenol	ND	mg / Kg	1	0.3	10/05/0
X00367	XG.2000.1111-5	101-55-3	4-Bromophenyl-phenylether	ND	mg / Kg	1	0.03	10/05/0
X00367	XG.2000.1111-5	59-50-7	4-Chloro-3-methylphenol	ND	mg / Kg	1	0.3	10/05/0
X00367	XG.2000.1111-5	106-47-8	4-Chloroaniline	ND	mg / Kg	1	0.3	10/05/0
X00367	XG.2000.1111-5	7005-72-3	4-Chlorophenyl-phenylether	ND	mg / Kg	1	0.03	10/05/0
X00367	XG.2000.1111-5	100-01-6	4-Nitroaniline	ND	mg / Kg	1	0.3	10/05/0
X00367	XG.2000.1111-5	100-02-7	4-Nitrophenol	ND	mg / Kg	1	0.6	10/05/0
X00367	XG.2000.1111-5	83-32-9	Acenaphthene	ND	mg / Kg	1	0.03	10/05/0
X00367	XG.2000.1111-5	208-96-8	Acenaphthylene	ND	mg / Kg	1	0.03	10/05/0
X00367	XG.2000.1111-5	62-53-3	Aniline	ND	mg / Kg	1	0.3	10/05/0
X00367	XG.2000.1111-5	120-12-7	Anthracene	ND	mg / Kg	1	0.03	10/05/0
X00367	XG.2000.1111-5		Azobenzene&1,2-Diphenylhydrazine	ND	mg / Kg	1	0.03	10/05/0
X00367	XG.2000.1111-5	56-55-3	Benzo (a) anthracene	ND	mg / Kg	1	0.03	10/05/0
X00367	XG.2000.1111-5	50-32-8	Benzo(a)pyrene	ND	mg / Kg	1	0.03	10/05/0
X00367	XG.2000.1111-5		Benzo(b & k)fluoranthene	ND	mg / Kg	1	0.03	10/05/0
X00367	XG.2000.1111-5	191-24-2	Benzo(g,h,i)perylene	ND	mg / Kg	1	0.3	10/05/0
X00367	XG.2000.1111-5	64-85-0	Benzoic acid	ND	mg / Kg	1	3	10/05/0
X00367	XG.2000.1111-5	100-51-6	Benzyl alcohol	ND	mg / Kg	1	1.5	10/05/0
X00367	XG.2000.1111-5	111-44-4	bis (2-Chloroethyl) ether	ND	mg / Kg	1	0.03	10/05/0
X00367	XG.2000.1111-5	111-91-1	bis(2-Chloroethoxy)methane	ND	mg / Kg	1	0.03	10/05/0
X00367	XG.2000.1111-5	108-60-1	bis(2-Chloroisopropyl)ether	ND	mg / Kg	1	0.03	10/05/0
X00367	XG.2000.1111-5	117-81-7	bis(2-Ethylhexyl)phthalate	ND	mg / Kg	1	0.3	10/05/
X00367	XG.2000.1111-5	85-68-7	Butylbenzylphthalate	ND	mg / Kg	1	0.03	10/05
X00367	XG.2000.1111-5	218-01-9	Chrysene	ND	mg / Kg	1	0.03	10/05/0
X00367	XG.2000.1111-5	84-74-2	di-n-Butylphthalate	ND	mg / Kg	1	0.3	10/05/0
X00367	XG.2000.1111-5	117-84-0	di-n-Octylpthalate	ND	mg / Kg	1	0.3	10/05/0
X00367	XG.2000.1111-5	53-70-3	Dibenz(a,h)anthracene	ND	mg / Kg	1	0.3	10/05/0
X00367	XG.2000.1111-5	132-64-9	Dibenzofuran	ND	mg / Kg	1	0.03	10/05/0
X00367	XG.2000.1111-5	84-66-2	Diethylphthalate	ND	mg / Kg	1	0.03	10/05/0
X00367	XG.2000.1111-5	131-11-3	Dimethylphthalate	ND	mg / Kg	1	0.03	10/05/0
X00367	XG.2000.1111-5	206-44-0	Fluoranthene	ND	mg / Kg	1	0.03	10/05/0
X00367	XG.2000.1111-5	86737	Fluorene	ND	mg / Kg	1	0.03	10/05/0
X00367	XG.2000.1111-5	118-74-1	Hexachlorobenzene	ND	mg / Kg	1	0.03	10/05/0
X00367	XG.2000.1111-5	87-68-3	Hexachlorobutadiene	ND	mg / Kg	1	0.03	10/05/0
X00367	XG.2000.1111-5	77-47-4	Hexachlorocyclopentadiene	ND	mg / Kg	1	1.5	10/05/0
X00367	XG.2000.1111-5	67-72-1	Hexachloroethane	ND	mg / Kg	1	0.03	10/05/0
X00367	XG.2000.1111-5	193-39-5	Indeno(1,2,3-cd)pyrene	ND	mg / Kg	1	0.3	10/05/0
X00367	XG.2000.1111-5	78-59-1	Isophorone	ND	mg / Kg	1	0.03	10/05/0
X00367	XG.2000.1111-5	621-64-7	n-Nitroso-di-n-propylamine	ND	mg / Kg	1	0.03	10/05/0
X00367	XG.2000.1111-5	62-75-9	n-Nitroso-dimethyl-amine	ND	mg / Kg	1	0.3	10/05/0
X00367	XG.2000.1111-5	86-30-6	n-Nitrosodiphenylamine	ND	mg / Kg	1	0.03	10/05/0
X00367	XG.2000.1111-5	91-20-3	Naphthalene	ND	mg / Kg	1	0.03	10/05/0
X00367	XG.2000.1111-5	98-95-3	Nitrobenzene	ND	mg / Kg	1	0.03	10/05/0
X00367	XG.2000.1111-5	87-86-5	Pentachlorophenol	ND	mg / Kg	1	0.3	10/05/0
X00367	XG.2000.1111-5	85-01-8	Phenanthrene	ND	mg / Kg	1	0.03	10/05/0
X00367	XG.2000.1111-5	108-95-2	Phenol	ND	mg / Kg	1	0.3	10/05/0
X00367	XG.2000.1111-5	129-00-0	Pyrene	ND	mg / Kg	1	0.03	10/05/0
X00367	XG.2000.1111-5	110-86-1	Pyridine	ND	mg / Kg	1	0.3	10/05/

Quality Control Summary

Client: CH2MHILL

Project: 0010135 KAFB ST 106

Explanation of codes

D *Not applicable due to sample dilution*

L *Not applicable due to MDL proximity*

X00367-024 **SW846 3550A/8270B SVOCs by GC/MS**

X00367	XG.2000.1146-1	120-82-1	1,2,4-Trichlorobenzene	ND	mg / Kg	1	0.03	10/16/00
X00367	XG.2000.1146-1	95-50-1	1,2-Dichlorobenzene	ND	mg / Kg	1	0.03	10/16/00
X00367	XG.2000.1146-1	541-73-1	1,3-Dichlorobenzene	ND	mg / Kg	1	0.03	10/16/00
X00367	XG.2000.1146-1	106-46-7	1,4-Dichlorobenzene	ND	mg / Kg	1	0.03	10/16/00
X00367	XG.2000.1146-1	90-12-0	1-Methylnaphthalene	ND	mg / Kg	1	0.03	10/16/00
X00367	XG.2000.1146-1	58-90-2	2,3,4,6-Tetrachlorophenol	ND	mg / Kg	1	1.5	10/16/00
X00367	XG.2000.1146-1	95-95-4	2,4,5-Trichlorophenol	ND	mg / Kg	1	0.3	10/16/00
X00367	XG.2000.1146-1	88-06-2	2,4,6-Trichlorophenol	ND	mg / Kg	1	0.3	10/16/00
X00367	XG.2000.1146-1	120-83-2	2,4-Dichlorophenol	ND	mg / Kg	1	0.3	10/16/00
X00367	XG.2000.1146-1	105-67-9	2,4-Dimethylphenol	ND	mg / Kg	1	0.03	10/16/00
X00367	XG.2000.1146-1	51-28-5	2,4-Dinitrophenol	ND	mg / Kg	1	0.67	10/16/00
X00367	XG.2000.1146-1	121-14-2	2,4-Dinitrotoluene	ND	mg / Kg	1	0.3	10/16/00
X00367	XG.2000.1146-1	606-20-2	2,6-Dinitrotoluene	ND	mg / Kg	1	0.3	10/16/00
X00367	XG.2000.1146-1	91-58-7	2-Chloronaphthalene	ND	mg / Kg	1	0.03	10/16/00
X00367	XG.2000.1146-1	95-57-8	2-Chlorophenol	ND	mg / Kg	1	0.03	10/16/00
X00367	XG.2000.1146-1	91-57-6	2-Methylnaphthalene	ND	mg / Kg	1	0.03	10/16/00
X00367	XG.2000.1146-1	95-48-7	2-Methylphenol	ND	mg / Kg	1	0.03	10/16/00
X00367	XG.2000.1146-1	88-74-4	2-Nitroaniline	ND	mg / Kg	1	0.3	10/16/00
X00367	XG.2000.1146-1	88-75-5	2-Nitrophenol	ND	mg / Kg	1	0.3	10/16/00
X00367	XG.2000.1146-1		3+4 Methylphenol	ND	mg / Kg	1	0.03	10/16/00
X00367	XG.2000.1146-1	91-94-1	3,3-Dichlorobenzidine	ND	mg / Kg	1	0.3	10/16/00
X00367	XG.2000.1146-1	99-09-2	3-Nitroaniline	ND	mg / Kg	1	0.3	10/16/00
7	XG.2000.1146-1	534-52-1	4,6-Dinitro-2-methylphenol	ND	mg / Kg	1	0.3	10/16/00
X00367	XG.2000.1146-1	101-55-3	4-Bromophenyl-phenylether	ND	mg / Kg	1	0.03	10/16/00
X00367	XG.2000.1146-1	59-50-7	4-Chloro-3-methylphenol	ND	mg / Kg	1	0.3	10/16/00
X00367	XG.2000.1146-1	106-47-8	4-Chloroaniline	ND	mg / Kg	1	0.3	10/16/00
X00367	XG.2000.1146-1	7005-72-3	4-Chlorophenyl-phenylether	ND	mg / Kg	1	0.03	10/16/00
X00367	XG.2000.1146-1	100-01-6	4-Nitroaniline	ND	mg / Kg	1	0.3	10/16/00
X00367	XG.2000.1146-1	100-02-7	4-Nitrophenol	ND	mg / Kg	1	0.6	10/16/00
X00367	XG.2000.1146-1	83-32-9	Acenaphthene	ND	mg / Kg	1	0.03	10/16/00
X00367	XG.2000.1146-1	208-96-8	Acenaphthylene	ND	mg / Kg	1	0.03	10/16/00
X00367	XG.2000.1146-1	62-53-3	Aniline	ND	mg / Kg	1	0.3	10/16/00
X00367	XG.2000.1146-1	120-12-7	Anthracene	ND	mg / Kg	1	0.03	10/16/00
X00367	XG.2000.1146-1		Azobenzene&1,2-Diphenylhydrazine	ND	mg / Kg	1	0.03	10/16/00
X00367	XG.2000.1146-1	56-55-3	Benzo (a) anthracene	ND	mg / Kg	1	0.03	10/16/00
X00367	XG.2000.1146-1	50-32-8	Benzo(a)pyrene	ND	mg / Kg	1	0.03	10/16/00
X00367	XG.2000.1146-1		Benzo(b & k)fluoranthene	ND	mg / Kg	1	0.03	10/16/00
X00367	XG.2000.1146-1	191-24-2	Benzo(g,h,i)perylene	ND	mg / Kg	1	0.3	10/16/00
X00367	XG.2000.1146-1	64-85-0	Benzoic acid	ND	mg / Kg	1	3	10/16/00
X00367	XG.2000.1146-1	100-51-6	Benzyl alcohol	ND	mg / Kg	1	1.5	10/16/00
X00367	XG.2000.1146-1	111-44-4	bis (2-Chloroethyl) ether	ND	mg / Kg	1	0.03	10/16/00
X00367	XG.2000.1146-1	111-91-1	bis(2-Chloroethoxy)methane	ND	mg / Kg	1	0.03	10/16/00
X00367	XG.2000.1146-1	108-60-1	bis(2-Chloroisopropyl)ether	ND	mg / Kg	1	0.03	10/16/00
X00367	XG.2000.1146-1	117-81-7	bis(2-Ethylhexyl)phthalate	ND	mg / Kg	1	0.3	10/16/00
X00367	XG.2000.1146-1	85-68-7	Butylbenzylphthalate	ND	mg / Kg	1	0.03	10/16/00
X00367	XG.2000.1146-1	218-01-9	Chrysene	ND	mg / Kg	1	0.03	10/16/00
X00367	XG.2000.1146-1	84-74-2	di-n-Butylphthalate	ND	mg / Kg	1	0.3	10/16/00
7	XG.2000.1146-1	117-84-0	di-n-Octylpthalate	ND	mg / Kg	1	0.3	10/16/00

Quality Control Summary

Client: CH2MHILL

Project: 0010135 KAFB ST 106

Explanation of codes

D *Not applicable due to sample dil*

L *Not applicable due to MDL proxim*

X00367	XG.2000.1146-1	53-70-3	Dibenz(a,h)anthracene	ND	mg / Kg	1	0.3	10/16/00
X00367	XG.2000.1146-1	132-64-9	Dibenzofuran	ND	mg / Kg	1	0.03	10/16/00
X00367	XG.2000.1146-1	84-66-2	Diethylphthalate	ND	mg / Kg	1	0.03	10/16/00
X00367	XG.2000.1146-1	131-11-3	Dimethylphthalate	ND	mg / Kg	1	0.03	10/16/00
X00367	XG.2000.1146-1	206-44-0	Fluoranthene	ND	mg / Kg	1	0.03	10/16/00
X00367	XG.2000.1146-1	86737	Fluorene	ND	mg / Kg	1	0.03	10/16/00
X00367	XG.2000.1146-1	118-74-1	Hexachlorobenzene	ND	mg / Kg	1	0.03	10/16/00
X00367	XG.2000.1146-1	87-68-3	Hexachlorobutadiene	ND	mg / Kg	1	0.03	10/16/00
X00367	XG.2000.1146-1	77-47-4	Hexachlorocyclopentadiene	ND	mg / Kg	1	1.5	10/16/00
X00367	XG.2000.1146-1	67-72-1	Hexachloroethane	ND	mg / Kg	1	0.03	10/16/00
X00367	XG.2000.1146-1	193-39-5	Indeno(1,2,3-cd)pyrene	ND	mg / Kg	1	0.3	10/16/00
X00367	XG.2000.1146-1	78-59-1	Isophorone	ND	mg / Kg	1	0.03	10/16/00
X00367	XG.2000.1146-1	621-64-7	n-Nitroso-di-n-propylamine	ND	mg / Kg	1	0.03	10/16/00
X00367	XG.2000.1146-1	62-75-9	n-Nitroso-dimethyl-amine	ND	mg / Kg	1	0.3	10/16/00
X00367	XG.2000.1146-1	86-30-6	n-Nitrosodiphenylamine	ND	mg / Kg	1	0.03	10/16/00
X00367	XG.2000.1146-1	91-20-3	Naphthalene	ND	mg / Kg	1	0.03	10/16/00
X00367	XG.2000.1146-1	98-95-3	Nitrobenzene	ND	mg / Kg	1	0.03	10/16/00
X00367	XG.2000.1146-1	87-86-5	Pentachlorophenol	ND	mg / Kg	1	0.3	10/16/00
X00367	XG.2000.1146-1	85-01-8	Phenanthrene	ND	mg / Kg	1	0.03	10/16/00
X00367	XG.2000.1146-1	108-95-2	Phenol	ND	mg / Kg	1	0.3	10/16/00
X00367	XG.2000.1146-1	129-00-0	Pyrene	ND	mg / Kg	1	0.03	10/16/00
X00367	XG.2000.1146-1	110-86-1	Pyridine	ND	mg / Kg	1	0.3	10/16/00
X00385-001		**SW846 5030A/8015A GRO by GC/FID**						
X00385	XG.2000.1096-1		Gasoline Range Organics	ND	mg / Kg	1	0.25	10/0
X00385-010		**SW846 5030A/8015A GRO by GC/FID**						
X00385	XG.2000.1096-7		Gasoline Range Organics	ND	mg / Kg	1	0.25	10/03/00
X00385-023		**SW846 5030A/8015A GRO by GC/FID**						
X00385	XG.2000.1141-1		Gasoline Range Organics	ND	mg / Kg	1	0.25	10/14/00
X00385-031		**SW846 5030A/8015A GRO by GC/FID**						
X00385	XG.2000.1141-8		Gasoline Range Organics	ND	mg / Kg	1	0.25	10/16/00
X00392-001		**SW846 5030A/8021B Purgeable VOCs by GC/PID**						
X00392	XG.2000.1112-1	71-43-2	Benzene	ND	mg / Kg	1	0.005	10/05/00
X00392	XG.2000.1112-1	100-41-4	Ethylbenzene	ND	mg / Kg	1	0.005	10/05/00
X00392	XG.2000.1112-1	95-47-6	o-Xylene	ND	mg / Kg	1	0.005	10/05/00
X00392	XG.2000.1112-1	108-38-3/106-42	p/m-Xylenes	ND	mg / Kg	1	0.01	10/05/00
X00392	XG.2000.1112-1	108-88-3	Toluene	ND	mg / Kg	1	0.005	10/05/00
X00392-014		**SW846 5030A/8021B Purgeable VOCs by GC/PID**						
X00392	XG.2000.1156-1	71-43-2	Benzene	ND	mg / Kg	1	0.005	10/17/00
X00392	XG.2000.1156-1	100-41-4	Ethylbenzene	ND	mg / Kg	1	0.005	10/17/00
X00392	XG.2000.1156-1	95-47-6	o-Xylene	ND	mg / Kg	1	0.005	10/17/00
X00392	XG.2000.1156-1	108-38-3/106-42	p/m-Xylenes	ND	mg / Kg	1	0.01	10/17/00
X00392	XG.2000.1156-1	108-88-3	Toluene	ND	mg / Kg	1	0.005	10/17/00
X00392-024		**SW846 5030A/8021B Purgeable VOCs by GC/PID**						
X00392	XG.2000.1164-4	71-43-2	Benzene	ND	mg / Kg	1	0.005	10/18/00
X00392	XG.2000.1164-4	100-41-4	Ethylbenzene	ND	mg / Kg	1	0.005	10/18
X00392	XG.2000.1164-4	95-47-6	o-Xylene	ND	mg / Kg	1	0.005	10/18

Quality Control Summary

Explanation of codes

D *Not applicable due to sample dilution*
L *Not applicable due to MDL proximity*

Client: **CH2MHILL**
Project: **0010135 KAFB ST 106**

X00392	XG.2000.1164-4	108-38-3/106-42	p/m-Xylenes	ND	mg / Kg	1	0.01		10/18/00
X00392	XG.2000.1164-4	108-88-3	Toluene	ND	mg / Kg	1	0.005		10/18/00
X00398-001		**SW846 8260A Purgeable VOCs by GC/MS**							
X00398	XG.2000.1158-1	75-34-3	1,1 Dichloroethane	ND	mg / Kg	1	0.005		10/10/00
X00398	XG.2000.1206-1	75-34-3	1,1 Dichloroethane	ND	mg / Kg	1	0.005		10/10/00
X00398	XG.2000.1158-1	75-34-3	1,1 Dichloroethene	ND	mg / Kg	1	0.005		10/10/00
X00398	XG.2000.1206-1	75-34-3	1,1 Dichloroethene	ND	mg / Kg	1	0.005		10/10/00
X00398	XG.2000.1158-1	71-55-6	1,1,1 Trichloroethane	ND	mg / Kg	1	0.005		10/10/00
X00398	XG.2000.1206-1	71-55-6	1,1,1 Trichloroethane	ND	mg / Kg	1	0.005		10/10/00
X00398	XG.2000.1158-1	630-20-6	1,1,1,2 Tetrachloroethane	ND	mg / Kg	1	0.005		10/10/00
X00398	XG.2000.1206-1	630-20-6	1,1,1,2 Tetrachloroethane	ND	mg / Kg	1	0.005		10/10/00
X00398	XG.2000.1158-1	79-00-5	1,1,2 Trichloroethane	ND	mg / Kg	1	0.005		10/10/00
X00398	XG.2000.1206-1	79-00-5	1,1,2 Trichloroethane	ND	mg / Kg	1	0.005		10/10/00
X00398	XG.2000.1158-1	79-34-5	1,1,2,2 Tetrachloroethane	ND	mg / Kg	1	0.005		10/10/00
X00398	XG.2000.1206-1	79-34-5	1,1,2,2 Tetrachloroethane	ND	mg / Kg	1	0.005		10/10/00
X00398	XG.2000.1158-1	106-93-4	1,2 Dibromoethane (EDB)	ND	mg / Kg	1	0.005		10/10/00
X00398	XG.2000.1206-1	106-93-4	1,2 Dibromoethane (EDB)	ND	mg / Kg	1	0.005		10/10/00
X00398	XG.2000.1158-1	95-50-1	1,2 Dichlorobenzene	ND	mg / Kg	1	0.005		10/10/00
X00398	XG.2000.1206-1	95-50-1	1,2 Dichlorobenzene	ND	mg / Kg	1	0.005		10/10/00
X00398	XG.2000.1158-1	107-06-2	1,2 Dichloroethane	ND	mg / Kg	1	0.005		10/10/00
X00398	XG.2000.1206-1	107-06-2	1,2 Dichloroethane	ND	mg / Kg	1	0.005		10/10/00
X00398	XG.2000.1158-1	78-87-5	1,2 Dichloropropane	ND	mg / Kg	1	0.005		10/10/00
8	XG.2000.1206-1	78-87-5	1,2 Dichloropropane	ND	mg / Kg	1	0.005		10/10/00
X00398	XG.2000.1158-1	96-18-4	1,2,3 Trichloropropane	ND	mg / Kg	1	0.005		10/10/00
X00398	XG.2000.1206-1	96-18-4	1,2,3 Trichloropropane	ND	mg / Kg	1	0.005		10/10/00
X00398	XG.2000.1158-1	95-63-6	1,2,4-Trimethylbenzene	ND	mg / Kg	1	0.005		10/10/00
X00398	XG.2000.1206-1	95-63-6	1,2,4-Trimethylbenzene	ND	mg / Kg	1	0.005		10/10/00
X00398	XG.2000.1158-1	541-73-1	1,3 Dichlorobenzene	ND	mg / Kg	1	0.005		10/10/00
X00398	XG.2000.1206-1	541-73-1	1,3 Dichlorobenzene	ND	mg / Kg	1	0.005		10/10/00
X00398	XG.2000.1158-1	108-67-8	1,3,5-Trimethylbenzene	ND	mg / Kg	1	0.005		10/10/00
X00398	XG.2000.1206-1	108-67-8	1,3,5-Trimethylbenzene	ND	mg / Kg	1	0.005		10/10/00
X00398	XG.2000.1158-1	764-41-0	1,4 Dichloro-2-butene	ND	mg / Kg	1	0.05		10/10/00
X00398	XG.2000.1206-1	764-41-0	1,4 Dichloro-2-butene	ND	mg / Kg	1	0.05		10/10/00
X00398	XG.2000.1158-1	106-46-7	1,4 Dichlorobenzene	ND	mg / Kg	1	0.005		10/10/00
X00398	XG.2000.1206-1	106-46-7	1,4 Dichlorobenzene	ND	mg / Kg	1	0.005		10/10/00
X00398	XG.2000.1158-1	78-93-3	2-Butanone (MEK)	ND	mg / Kg	1	0.025		10/10/00
X00398	XG.2000.1206-1	78-93-3	2-Butanone (MEK)	ND	mg / Kg	1	0.025		10/10/00
X00398	XG.2000.1158-1	110-75-8	2-Chloroethylvinylether	ND	mg / Kg	1	0.025		10/10/00
X00398	XG.2000.1206-1	110-75-8	2-Chloroethylvinylether	ND	mg / Kg	1	0.025		10/10/00
X00398	XG.2000.1158-1	591-78-6	2-Hexanone (MBK)	ND	mg / Kg	1	0.025		10/10/00
X00398	XG.2000.1206-1	591-78-6	2-Hexanone (MBK)	ND	mg / Kg	1	0.025		10/10/00
X00398	XG.2000.1158-1	108-10-1	4-Methyl-2-pentanone (MIBK)	ND	mg / Kg	1	0.025		10/10/00
X00398	XG.2000.1206-1	108-10-1	4-Methyl-2-pentanone (MIBK)	ND	mg / Kg	1	0.025		10/10/00
X00398	XG.2000.1158-1	67-64-1	Acetone	ND	mg / Kg	1	0.05		10/10/00
X00398	XG.2000.1206-1	67-64-1	Acetone	ND	mg / Kg	1	0.05		10/10/00
X00398	XG.2000.1158-1	107-02-8	Acrolein	ND	mg / Kg	1	0.1		10/10/00
X00398	XG.2000.1206-1	107-02-8	Acrolein	ND	mg / Kg	1	0.1		10/10/00
X00398	XG.2000.1158-1	107-13-1	Acrylonitrile	ND	mg / Kg	1	0.1		10/10/00
98	XG.2000.1206-1	107-13-1	Acrylonitrile	ND	mg / Kg	1	0.1		10/10/00

Quality Control Summary

Client: CH2MHILL

Project: 0010135 KAFB ST 106

Explanation of codes

D Not applicable due to sample diluti

L Not applicable due to MDL proximi

X00398	XG.2000.1158-1	71-43-2	Benzene	ND	mg / Kg	1	0.005	10/10/0C
X00398	XG.2000.1206-1	71-43-2	Benzene	ND	mg / Kg	1	0.005	10/10/0C
X00398	XG.2000.1158-1	75-27-4	Bromodichloromethane	ND	mg / Kg	1	0.005	10/10/0C
X00398	XG.2000.1206-1	75-27-4	Bromodichloromethane	ND	mg / Kg	1	0.005	10/10/0C
X00398	XG.2000.1158-1	75-25-2	Bromoform	ND	mg / Kg	1	0.005	10/10/0C
X00398	XG.2000.1206-1	75-25-2	Bromoform	ND	mg / Kg	1	0.005	10/10/0C
X00398	XG.2000.1158-1	74-83-9	Bromomethane	ND	mg / Kg	1	0.025	10/10/0C
X00398	XG.2000.1206-1	74-83-9	Bromomethane	ND	mg / Kg	1	0.025	10/10/0C
X00398	XG.2000.1158-1	75-15-0	Carbon disulfide	ND	mg / Kg	1	0.025	10/10/0C
X00398	XG.2000.1206-1	75-15-0	Carbon disulfide	ND	mg / Kg	1	0.025	10/10/0C
X00398	XG.2000.1158-1	56-23-5	Carbon tetrachloride	ND	mg / Kg	1	0.005	10/10/00
X00398	XG.2000.1206-1	56-23-5	Carbon tetrachloride	ND	mg / Kg	1	0.005	10/10/00
X00398	XG.2000.1158-1	108-90-7	Chlorobenzene	ND	mg / Kg	1	0.005	10/10/00
X00398	XG.2000.1206-1	108-90-7	Chlorobenzene	ND	mg / Kg	1	0.005	10/10/00
X00398	XG.2000.1158-1	124-48-1	Chlorodibromomethane	ND	mg / Kg	1	0.005	10/10/00
X00398	XG.2000.1206-1	124-48-1	Chlorodibromomethane	ND	mg / Kg	1	0.005	10/10/00
X00398	XG.2000.1158-1	75-00-3	Chloroethane	ND	mg / Kg	1	0.025	10/10/00
X00398	XG.2000.1206-1	75-00-3	Chloroethane	ND	mg / Kg	1	0.025	10/10/00
X00398	XG.2000.1158-1	67-66-3	Chloroform	ND	mg / Kg	1	0.005	10/10/00
X00398	XG.2000.1206-1	67-66-3	Chloroform	ND	mg / Kg	1	0.005	10/10/00
X00398	XG.2000.1158-1	74-87-3	Chloromethane	ND	mg / Kg	1	0.025	10/10/00
X00398	XG.2000.1206-1	74-87-3	Chloromethane	ND	mg / Kg	1	0.025	10/10/00
X00398	XG.2000.1158-1	156-59-2	cis-1,2 dichloroethene	ND	mg / Kg	1	0.005	10/10/00
X00398	XG.2000.1206-1	156-59-2	cis-1,2 dichloroethene	ND	mg / Kg	1	0.005	10/10/
X00398	XG.2000.1158-1	10061-01-5	cis-1,3 dichloropropene	ND	mg / Kg	1	0.005	10/10/
X00398	XG.2000.1206-1	10061-01-5	cis-1,3 dichloropropene	ND	mg / Kg	1	0.005	10/10/00
X00398	XG.2000.1158-1	74-95-3	Dibromomethane	ND	mg / Kg	1	0.005	10/10/00
X00398	XG.2000.1206-1	74-95-3	Dibromomethane	ND	mg / Kg	1	0.005	10/10/00
X00398	XG.2000.1158-1	97-63-2	Ethyl methacrylate	ND	mg / Kg	1	0.025	10/10/00
X00398	XG.2000.1206-1	97-63-2	Ethyl methacrylate	ND	mg / Kg	1	0.025	10/10/00
X00398	XG.2000.1158-1	100-41-4	Ethylbenzene	ND	mg / Kg	1	0.005	10/10/00
X00398	XG.2000.1206-1	100-41-4	Ethylbenzene	ND	mg / Kg	1	0.005	10/10/00
X00398	XG.2000.1158-1		Freon 113	ND	mg / Kg	1	0.025	10/10/00
X00398	XG.2000.1206-1		Freon 113	ND	mg / Kg	1	0.025	10/10/00
X00398	XG.2000.1158-1	75-71-8	Freon 12	ND	mg / Kg	1	0.05	10/10/00
X00398	XG.2000.1206-1	75-71-8	Freon 12	ND	mg / Kg	1	0.05	10/10/00
X00398	XG.2000.1158-1	74-88-4	Iodomethane	ND	mg / Kg	1	0.025	10/10/00
X00398	XG.2000.1206-1	74-88-4	Iodomethane	ND	mg / Kg	1	0.025	10/10/00
X00398	XG.2000.1158-1	1634-04-4	Methyl t-butyl ether (MTBE)	ND	mg / Kg	1	0.005	10/10/00
X00398	XG.2000.1206-1	1634-04-4	Methyl t-butyl ether (MTBE)	ND	mg / Kg	1	0.005	10/10/00
X00398	XG.2000.1158-1	75-09-2	Methylene chloride	ND	mg / Kg	1	0.05	10/10/00
X00398	XG.2000.1206-1	75-09-2	Methylene chloride	ND	mg / Kg	1	0.05	10/10/00
X00398	XG.2000.1158-1	91-20-3	Naphthalene	ND	mg / Kg	1	0.025	10/10/00
X00398	XG.2000.1206-1	91-20-3	Naphthalene	ND	mg / Kg	1	0.025	10/10/00
X00398	XG.2000.1158-1	95-47-6	o-Xylene	ND	mg / Kg	1	0.005	10/10/00
X00398	XG.2000.1206-1	95-47-6	o-Xylene	ND	mg / Kg	1	0.005	10/10/00
X00398	XG.2000.1158-1	108-38-3/106-42	p/m Xylenes	ND	mg / Kg	1	0.01	10/10/00
X00398	XG.2000.1206-1	108-38-3/106-42	p/m Xylenes	ND	mg / Kg	1	0.01	10/10/00
X00398	XG.2000.1158-1	100-42-5	Styrene	ND	mg / Kg	1	0.005	10/10

Quality Control Summary

Explanation of codes

D	*Not applicable due to sample dilution*
L	*Not applicable due to MDL proximity*

Client: CH2MHILL

Project: 0010135 KAFB ST 106

X00398	XG.2000.1206-1	100-42-5	Styrene	ND	mg / Kg	1	0.005		10/10/00
X00398	XG.2000.1158-1	156-60-5	t-1,2 Dichloroethene	ND	mg / Kg	1	0.005		10/10/00
X00398	XG.2000.1206-1	156-60-5	t-1,2 Dichloroethene	ND	mg / Kg	1	0.005		10/10/00
X00398	XG.2000.1158-1	10061-02-6	t-1,3 Dichloropropene	ND	mg / Kg	1	0.005		10/10/00
X00398	XG.2000.1206-1	10061-02-6	t-1,3 Dichloropropene	ND	mg / Kg	1	0.005		10/10/00
X00398	XG.2000.1158-1	127-18-4	Tetrachloroethene	ND	mg / Kg	1	0.005		10/10/00
X00398	XG.2000.1206-1	127-18-4	Tetrachloroethene	ND	mg / Kg	1	0.005		10/10/00
X00398	XG.2000.1158-1	108-88-3	Toluene	ND	mg / Kg	1	0.005		10/10/00
X00398	XG.2000.1206-1	108-88-3	Toluene	ND	mg / Kg	1	0.005		10/10/00
X00398	XG.2000.1158-1	79-01-6	Trichloroethene	ND	mg / Kg	1	0.005		10/10/00
X00398	XG.2000.1206-1	79-01-6	Trichloroethene	ND	mg / Kg	1	0.005		10/10/00
X00398	XG.2000.1158-1	75-69-4	Trichlorofluoromethane	ND	mg / Kg	1	0.025		10/10/00
X00398	XG.2000.1206-1	75-69-4	Trichlorofluoromethane	ND	mg / Kg	1	0.025		10/10/00
X00398	XG.2000.1158-1	108-05-4	Vinyl acetate	ND	mg / Kg	1	0.025		10/10/00
X00398	XG.2000.1206-1	108-05-4	Vinyl acetate	ND	mg / Kg	1	0.025		10/10/00
X00398	XG.2000.1158-1	75-01-4	Vinyl chloride	ND	mg / Kg	1	0.025		10/10/00
X00398	XG.2000.1206-1	75-01-4	Vinyl chloride	ND	mg / Kg	1	0.025		10/10/00

X00398-007 **SW846 8260A Purgeable VOCs by GC/MS**

X00398	XG.2000.1158-5	75-34-3	1,1 Dichloroethane	ND	mg / Kg	1	0.005		10/16/00
X00398	XG.2000.1206-4	75-34-3	1,1 Dichloroethane	ND	mg / Kg	1	0.005		10/16/00
X00398	XG.2000.1158-5	75-34-3	1,1 Dichloroethene	ND	mg / Kg	1	0.005		10/16/00
X00398	XG.2000.1206-4	75-34-3	1,1 Dichloroethene	ND	mg / Kg	1	0.005		10/16/00
X00398	XG.2000.1158-5	71-55-6	1,1,1 Trichloroethane	ND	mg / Kg	1	0.005		10/16/00
X00398	XG.2000.1206-4	71-55-6	1,1,1 Trichloroethane	ND	mg / Kg	1	0.005		10/16/00
X00398	XG.2000.1158-5	630-20-6	1,1,1,2 Tetrachloroethane	ND	mg / Kg	1	0.005		10/16/00
X00398	XG.2000.1206-4	630-20-6	1,1,1,2 Tetrachloroethane	ND	mg / Kg	1	0.005		10/16/00
X00398	XG.2000.1158-5	79-00-5	1,1,2 Trichloroethane	ND	mg / Kg	1	0.005		10/16/00
X00398	XG.2000.1206-4	79-00-5	1,1,2 Trichloroethane	ND	mg / Kg	1	0.005		10/16/00
X00398	XG.2000.1158-5	79-34-5	1,1,2,2 Tetrachloroethane	ND	mg / Kg	1	0.005		10/16/00
X00398	XG.2000.1206-4	79-34-5	1,1,2,2 Tetrachloroethane	ND	mg / Kg	1	0.005		10/16/00
X00398	XG.2000.1158-5	106-93-4	1,2 Dibromoethane (EDB)	ND	mg / Kg	1	0.005		10/16/00
X00398	XG.2000.1206-4	106-93-4	1,2 Dibromoethane (EDB)	ND	mg / Kg	1	0.005		10/16/00
X00398	XG.2000.1158-5	95-50-1	1,2 Dichlorobenzene	ND	mg / Kg	1	0.005		10/16/00
X00398	XG.2000.1206-4	95-50-1	1,2 Dichlorobenzene	ND	mg / Kg	1	0.005		10/16/00
X00398	XG.2000.1158-5	107-06-2	1,2 Dichloroethane	ND	mg / Kg	1	0.005		10/16/00
X00398	XG.2000.1206-4	107-06-2	1,2 Dichloroethane	ND	mg / Kg	1	0.005		10/16/00
X00398	XG.2000.1158-5	78-87-5	1,2 Dichloropropane	ND	mg / Kg	1	0.005		10/16/00
X00398	XG.2000.1206-4	78-87-5	1,2 Dichloropropane	ND	mg / Kg	1	0.005		10/16/00
X00398	XG.2000.1158-5	96-18-4	1,2,3 Trichloropropane	ND	mg / Kg	1	0.005		10/16/00
X00398	XG.2000.1206-4	96-18-4	1,2,3 Trichloropropane	ND	mg / Kg	1	0.005		10/16/00
X00398	XG.2000.1158-5	95-63-6	1,2,4-Trimethylbenzene	ND	mg / Kg	1	0.005		10/16/00
X00398	XG.2000.1206-4	95-63-6	1,2,4-Trimethylbenzene	ND	mg / Kg	1	0.005		10/16/00
X00398	XG.2000.1158-5	541-73-1	1,3 Dichlorobenzene	ND	mg / Kg	1	0.005		10/16/00
X00398	XG.2000.1206-4	541-73-1	1,3 Dichlorobenzene	ND	mg / Kg	1	0.005		10/16/00
X00398	XG.2000.1158-5	108-67-8	1,3,5-Trimethylbenzene	ND	mg / Kg	1	0.005		10/16/00
X00398	XG.2000.1206-4	108-67-8	1,3,5-Trimethylbenzene	ND	mg / Kg	1	0.005		10/16/00
X00398	XG.2000.1158-5	764-41-0	1,4 Dichloro-2-butene	ND	mg / Kg	1	0.05		10/16/00
X00398	XG.2000.1206-4	764-41-0	1,4 Dichloro-2-butene	ND	mg / Kg	1	0.05		10/16/00
X00398	XG.2000.1158-5	106-46-7	1,4 Dichlorobenzene	ND	mg / Kg	1	0.005		10/16/00
X00398	XG.2000.1206-4	106-46-7	1,4 Dichlorobenzene	ND	mg / Kg	1	0.005		10/16/00

Quality Control Summary

Client: **CH2MHILL**

Project: **0010135** **KAFB ST 106**

Explanation of codes

D	*Not applicable due to sample dilut*
L	*Not applicable due to MDL proxim*

X00398	XG.2000.1158-5	78-93-3	2-Butanone (MEK)	ND	mg / Kg	1	0.025	10/16/0
X00398	XG.2000.1206-4	78-93-3	2-Butanone (MEK)	ND	mg / Kg	1	0.025	10/16/0
X00398	XG.2000.1158-5	110-75-8	2-Chloroethylvinylether	ND	mg / Kg	1	0.025	10/16/0
X00398	XG.2000.1206-4	110-75-8	2-Chloroethylvinylether	ND	mg / Kg	1	0.025	10/16/0
X00398	XG.2000.1158-5	591-78-6	2-Hexanone (MBK)	ND	mg / Kg	1	0.025	10/16/0
X00398	XG.2000.1206-4	591-78-6	2-Hexanone (MBK)	ND	mg / Kg	1	0.025	10/16/0
X00398	XG.2000.1158-5	108-10-1	4-Methyl-2-pentanone (MIBK)	ND	mg / Kg	1	0.025	10/16/0
X00398	XG.2000.1206-4	108-10-1	4-Methyl-2-pentanone (MIBK)	ND	mg / Kg	1	0.025	10/16/0
X00398	XG.2000.1158-5	67-64-1	Acetone	ND	mg / Kg	1	0.05	10/16/0
X00398	XG.2000.1206-4	67-64-1	Acetone	ND	mg / Kg	1	0.05	10/16/0
X00398	XG.2000.1158-5	107-02-8	Acrolein	ND	mg / Kg	1	0.1	10/16/0
X00398	XG.2000.1206-4	107-02-8	Acrolein	ND	mg / Kg	1	0.1	10/16/0
X00398	XG.2000.1158-5	107-13-1	Acrylonitrile	ND	mg / Kg	1	0.1	10/16/0
X00398	XG.2000.1206-4	107-13-1	Acrylonitrile	ND	mg / Kg	1	0.1	10/16/0
X00398	XG.2000.1158-5	71-43-2	Benzene	ND	mg / Kg	1	0.005	10/16/0
X00398	XG.2000.1206-4	71-43-2	Benzene	ND	mg / Kg	1	0.005	10/16/0
X00398	XG.2000.1158-5	75-27-4	Bromodichloromethane	ND	mg / Kg	1	0.005	10/16/0
X00398	XG.2000.1206-4	75-27-4	Bromodichloromethane	ND	mg / Kg	1	0.005	10/16/0
X00398	XG.2000.1158-5	75-25-2	Bromoform	ND	mg / Kg	1	0.005	10/16/0
X00398	XG.2000.1206-4	75-25-2	Bromoform	ND	mg / Kg	1	0.005	10/16/0
X00398	XG.2000.1158-5	74-83-9	Bromomethane	ND	mg / Kg	1	0.025	10/16/0
X00398	XG.2000.1206-4	74-83-9	Bromomethane	ND	mg / Kg	1	0.025	10/16/0
X00398	XG.2000.1158-5	75-15-0	Carbon disulfide	ND	mg / Kg	1	0.025	10/16/0
X00398	XG.2000.1206-4	75-15-0	Carbon disulfide	ND	mg / Kg	1	0.025	10/16
X00398	XG.2000.1158-5	56-23-5	Carbon tetrachloride	ND	mg / Kg	1	0.005	10/16
X00398	XG.2000.1206-4	56-23-5	Carbon tetrachloride	ND	mg / Kg	1	0.005	10/16/0
X00398	XG.2000.1158-5	108-90-7	Chlorobenzene	ND	mg / Kg	1	0.005	10/16/0
X00398	XG.2000.1206-4	108-90-7	Chlorobenzene	ND	mg / Kg	1	0.005	10/16/0
X00398	XG.2000.1158-5	124-48-1	Chlorodibromomethane	ND	mg / Kg	1	0.005	10/16/0
X00398	XG.2000.1206-4	124-48-1	Chlorodibromomethane	ND	mg / Kg	1	0.005	10/16/0
X00398	XG.2000.1158-5	75-00-3	Chloroethane	ND	mg / Kg	1	0.025	10/16/0
X00398	XG.2000.1206-4	75-00-3	Chloroethane	ND	mg / Kg	1	0.025	10/16/0
X00398	XG.2000.1158-5	67-66-3	Chloroform	ND	mg / Kg	1	0.005	10/16/0
X00398	XG.2000.1206-4	67-66-3	Chloroform	ND	mg / Kg	1	0.005	10/16/0
X00398	XG.2000.1158-5	74-87-3	Chloromethane	ND	mg / Kg	1	0.025	10/16/0
X00398	XG.2000.1206-4	74-87-3	Chloromethane	ND	mg / Kg	1	0.025	10/16/0
X00398	XG.2000.1158-5	156-59-2	cis-1,2 dichloroethene	ND	mg / Kg	1	0.005	10/16/0
X00398	XG.2000.1206-4	156-59-2	cis-1,2 dichloroethene	ND	mg / Kg	1	0.005	10/16/0
X00398	XG.2000.1158-5	10061-01-5	cis-1,3 dichloropropene	ND	mg / Kg	1	0.005	10/16/0
X00398	XG.2000.1206-4	10061-01-5	cis-1,3 dichloropropene	ND	mg / Kg	1	0.005	10/16/0
X00398	XG.2000.1158-5	74-95-3	Dibromomethane	ND	mg / Kg	1	0.005	10/16/0
X00398	XG.2000.1206-4	74-95-3	Dibromomethane	ND	mg / Kg	1	0.005	10/16/0
X00398	XG.2000.1158-5	97-63-2	Ethyl methacrylate	ND	mg / Kg	1	0.025	10/16/0
X00398	XG.2000.1206-4	97-63-2	Ethyl methacrylate	ND	mg / Kg	1	0.025	10/16/0
X00398	XG.2000.1158-5	100-41-4	Ethylbenzene	ND	mg / Kg	1	0.005	10/16/0
X00398	XG.2000.1206-4	100-41-4	Ethylbenzene	ND	mg / Kg	1	0.005	10/16/0
X00398	XG.2000.1158-5		Freon 113	ND	mg / Kg	1	0.025	10/16/0
X00398	XG.2000.1206-4		Freon 113	ND	mg / Kg	1	0.025	10/16/0
X00398	XG.2000.1158-5	75-71-8	Freon 12	ND	mg / Kg	1	0.05	10/16/0
X00398	XG.2000.1206-4	75-71-8	Freon 12	ND	mg / Kg	1	0.05	10/16
X00398	XG.2000.1158-5	74-88-4	Iodomethane	ND	mg / Kg	1	0.025	10/16

Quality Control Summary

Client: CH2MHILL

Project: 0010135 KAFB ST 106

Explanation of codes

D Not applicable due to sample dilution

L Not applicable due to MDL proximity

X00398	XG.2000.1206-4	74-88-4	Iodomethane	ND	mg / Kg	1	0.025		10/16/00
X00398	XG.2000.1158-5	1634-04-4	Methyl t-butyl ether (MTBE)	ND	mg / Kg	1	0.005		10/16/00
X00398	XG.2000.1206-4	1634-04-4	Methyl t-butyl ether (MTBE)	ND	mg / Kg	1	0.005		10/16/00
X00398	XG.2000.1158-5	75-09-2	Methylene chloride	ND	mg / Kg	1	0.05		10/16/00
X00398	XG.2000.1206-4	75-09-2	Methylene chloride	ND	mg / Kg	1	0.05		10/16/00
X00398	XG.2000.1158-5	91-20-3	Naphthalene	ND	mg / Kg	1	0.025		10/16/00
X00398	XG.2000.1206-4	91-20-3	Naphthalene	ND	mg / Kg	1	0.025		10/16/00
X00398	XG.2000.1158-5	95-47-6	o-Xylene	ND	mg / Kg	1	0.005		10/16/00
X00398	XG.2000.1206-4	95-47-6	o-Xylene	ND	mg / Kg	1	0.005		10/16/00
X00398	XG.2000.1158-5	108-38-3/106-42	p/m Xylenes	ND	mg / Kg	1	0.01		10/16/00
X00398	XG.2000.1206-4	108-38-3/106-42	p/m Xylenes	ND	mg / Kg	1	0.01		10/16/00
X00398	XG.2000.1158-5	100-42-5	Styrene	ND	mg / Kg	1	0.005		10/16/00
X00398	XG.2000.1206-4	100-42-5	Styrene	ND	mg / Kg	1	0.005		10/16/00
X00398	XG.2000.1158-5	156-60-5	t-1,2 Dichloroethene	ND	mg / Kg	1	0.005		10/16/00
X00398	XG.2000.1206-4	156-60-5	t-1,2 Dichloroethene	ND	mg / Kg	1	0.005		10/16/00
X00398	XG.2000.1158-5	10061-02-6	t-1,3 Dichloropropene	ND	mg / Kg	1	0.005		10/16/00
X00398	XG.2000.1206-4	10061-02-6	t-1,3 Dichloropropene	ND	mg / Kg	1	0.005		10/16/00
X00398	XG.2000.1158-5	127-18-4	Tetrachloroethene	ND	mg / Kg	1	0.005		10/16/00
X00398	XG.2000.1206-4	127-18-4	Tetrachloroethene	ND	mg / Kg	1	0.005		10/16/00
X00398	XG.2000.1158-5	108-88-3	Toluene	ND	mg / Kg	1	0.005		10/16/00
X00398	XG.2000.1206-4	108-88-3	Toluene	ND	mg / Kg	1	0.005		10/16/00
X00398	XG.2000.1158-5	79-01-6	Trichloroethene	ND	mg / Kg	1	0.005		10/16/00
[illegible]3	XG.2000.1206-4	79-01-6	Trichloroethene	ND	mg / Kg	1	0.005		10/16/00
X[illegible]98	XG.2000.1158-5	75-69-4	Trichlorofluoromethane	ND	mg / Kg	1	0.025		10/16/00
X00398	XG.2000.1206-4	75-69-4	Trichlorofluoromethane	ND	mg / Kg	1	0.025		10/16/00
X00398	XG.2000.1158-5	108-05-4	Vinyl acetate	ND	mg / Kg	1	0.025		10/16/00
X00398	XG.2000.1206-4	108-05-4	Vinyl acetate	ND	mg / Kg	1	0.025		10/16/00
X00398	XG.2000.1158-5	75-01-4	Vinyl chloride	ND	mg / Kg	1	0.025		10/16/00
X00398	XG.2000.1206-4	75-01-4	Vinyl chloride	ND	mg / Kg	1	0.025		10/16/00
X00398-018		**SW846 8260A Purgeable VOCs by GC/MS**							
X00398	XG.2000.1158-12	75-34-3	1,1 Dichloroethane	ND	mg / Kg	1	0.005		10/17/00
X00398	XG.2000.1205-1	75-34-3	1,1 Dichloroethane	ND	mg / Kg	1	0.005		10/17/00
X00398	XG.2000.1206-7	75-34-3	1,1 Dichloroethane	ND	mg / Kg	1	0.005		10/17/00
X00398	XG.2000.1158-12	75-34-3	1,1 Dichloroethene	ND	mg / Kg	1	0.005		10/17/00
X00398	XG.2000.1205-1	75-34-3	1,1 Dichloroethene	ND	mg / Kg	1	0.005		10/17/00
X00398	XG.2000.1206-7	75-34-3	1,1 Dichloroethene	ND	mg / Kg	1	0.005		10/17/00
X00398	XG.2000.1158-12	71-55-6	1,1,1 Trichloroethane	ND	mg / Kg	1	0.005		10/17/00
X00398	XG.2000.1205-1	71-55-6	1,1,1 Trichloroethane	ND	mg / Kg	1	0.005		10/17/00
X00398	XG.2000.1206-7	71-55-6	1,1,1 Trichloroethane	ND	mg / Kg	1	0.005		10/17/00
X00398	XG.2000.1158-12	630-20-6	1,1,1,2 Tetrachloroethane	ND	mg / Kg	1	0.005		10/17/00
X00398	XG.2000.1205-1	630-20-6	1,1,1,2 Tetrachloroethane	ND	mg / Kg	1	0.005		10/17/00
X00398	XG.2000.1206-7	630-20-6	1,1,1,2 Tetrachloroethane	ND	mg / Kg	1	0.005		10/17/00
X00398	XG.2000.1158-12	79-00-5	1,1,2 Trichloroethane	ND	mg / Kg	1	0.005		10/17/00
X00398	XG.2000.1205-1	79-00-5	1,1,2 Trichloroethane	ND	mg / Kg	1	0.005		10/17/00
X00398	XG.2000.1206-7	79-00-5	1,1,2 Trichloroethane	ND	mg / Kg	1	0.005		10/17/00
X00398	XG.2000.1158-12	79-34-5	1,1,2,2 Tetrachloroethane	ND	mg / Kg	1	0.005		10/17/00
X00398	XG.2000.1205-1	79-34-5	1,1,2,2 Tetrachloroethane	ND	mg / Kg	1	0.005		10/17/00
[illegible]8	XG.2000.1206-7	79-34-5	1,1,2,2 Tetrachloroethane	ND	mg / Kg	1	0.005		10/17/00
[illegible]8	XG.2000.1158-12	106-93-4	1,2 Dibromoethane (EDB)	ND	mg / Kg	1	0.005		10/17/00

Quality Control Summary

Explanation of codes

D *Not applicable due to sample dilut*
L *Not applicable due to MDL proximity*

Client: **CH2MHILL**

Project: **0010135** **KAFB ST 106**

X00398	XG.2000.1205-1	106-93-4	1,2 Dibromoethane (EDB)	ND	mg / Kg	1	0.005		10/17/0(
X00398	XG.2000.1206-7	106-93-4	1,2 Dibromoethane (EDB)	ND	mg / Kg	1	0.005		10/17/0(
X00398	XG.2000.1158-12	95-50-1	1,2 Dichlorobenzene	ND	mg / Kg	1	0.005		10/17/0(
X00398	XG.2000.1205-1	95-50-1	1,2 Dichlorobenzene	ND	mg / Kg	1	0.005		10/17/0(
X00398	XG.2000.1206-7	95-50-1	1,2 Dichlorobenzene	ND	mg / Kg	1	0.005		10/17/0(
X00398	XG.2000.1158-12	107-06-2	1,2 Dichloroethane	ND	mg / Kg	1	0.005		10/17/0(
X00398	XG.2000.1205-1	107-06-2	1,2 Dichloroethane	ND	mg / Kg	1	0.005		10/17/0(
X00398	XG.2000.1206-7	107-06-2	1,2 Dichloroethane	ND	mg / Kg	1	0.005		10/17/0(
X00398	XG.2000.1158-12	78-87-5	1,2 Dichloropropane	ND	mg / Kg	1	0.005		10/17/0(
X00398	XG.2000.1205-1	78-87-5	1,2 Dichloropropane	ND	mg / Kg	1	0.005		10/17/0(
X00398	XG.2000.1206-7	78-87-5	1,2 Dichloropropane	ND	mg / Kg	1	0.005		10/17/0(
X00398	XG.2000.1158-12	96-18-4	1,2,3 Trichloropropane	ND	mg / Kg	1	0.005		10/17/0(
X00398	XG.2000.1205-1	96-18-4	1,2,3 Trichloropropane	ND	mg / Kg	1	0.005		10/17/0(
X00398	XG.2000.1206-7	96-18-4	1,2,3 Trichloropropane	ND	mg / Kg	1	0.005		10/17/0(
X00398	XG.2000.1158-12	95-63-6	1,2,4-Trimethylbenzene	ND	mg / Kg	1	0.005		10/17/0(
X00398	XG.2000.1205-1	95-63-6	1,2,4-Trimethylbenzene	ND	mg / Kg	1	0.005		10/17/0(
X00398	XG.2000.1206-7	95-63-6	1,2,4-Trimethylbenzene	ND	mg / Kg	1	0.005		10/17/0(
X00398	XG.2000.1158-12	541-73-1	1,3 Dichlorobenzene	ND	mg / Kg	1	0.005		10/17/0(
X00398	XG.2000.1205-1	541-73-1	1,3 Dichlorobenzene	ND	mg / Kg	1	0.005		10/17/0(
X00398	XG.2000.1206-7	541-73-1	1,3 Dichlorobenzene	ND	mg / Kg	1	0.005		10/17/0(
X00398	XG.2000.1158-12	108-67-8	1,3,5-Trimethylbenzene	ND	mg / Kg	1	0.005		10/17/0(
X00398	XG.2000.1205-1	108-67-8	1,3,5-Trimethylbenzene	ND	mg / Kg	1	0.005		10/17/0(
X00398	XG.2000.1206-7	108-67-8	1,3,5-Trimethylbenzene	ND	mg / Kg	1	0.005		10/17/0(
X00398	XG.2000.1158-12	764-41-0	1,4 Dichloro-2-butene	ND	mg / Kg	1	0.05		10/17
X00398	XG.2000.1205-1	764-41-0	1,4 Dichloro-2-butene	ND	mg / Kg	1	0.05		10/17/(
X00398	XG.2000.1206-7	764-41-0	1,4 Dichloro-2-butene	ND	mg / Kg	1	0.05		10/17/0(
X00398	XG.2000.1158-12	106-46-7	1,4 Dichlorobenzene	ND	mg / Kg	1	0.005		10/17/0(
X00398	XG.2000.1205-1	106-46-7	1,4 Dichlorobenzene	ND	mg / Kg	1	0.005		10/17/0(
X00398	XG.2000.1206-7	106-46-7	1,4 Dichlorobenzene	ND	mg / Kg	1	0.005		10/17/0(
X00398	XG.2000.1158-12	78-93-3	2-Butanone (MEK)	ND	mg / Kg	1	0.025		10/17/0(
X00398	XG.2000.1205-1	78-93-3	2-Butanone (MEK)	ND	mg / Kg	1	0.025		10/17/0(
X00398	XG.2000.1206-7	78-93-3	2-Butanone (MEK)	ND	mg / Kg	1	0.025		10/17/0(
X00398	XG.2000.1158-12	110-75-8	2-Chloroethylvinylether	ND	mg / Kg	1	0.025		10/17/0(
X00398	XG.2000.1205-1	110-75-8	2-Chloroethylvinylether	ND	mg / Kg	1	0.025		10/17/0(
X00398	XG.2000.1206-7	110-75-8	2-Chloroethylvinylether	ND	mg / Kg	1	0.025		10/17/0(
X00398	XG.2000.1158-12	591-78-6	2-Hexanone (MBK)	ND	mg / Kg	1	0.025		10/17/0(
X00398	XG.2000.1205-1	591-78-6	2-Hexanone (MBK)	ND	mg / Kg	1	0.025		10/17/0(
X00398	XG.2000.1206-7	591-78-6	2-Hexanone (MBK)	ND	mg / Kg	1	0.025		10/17/0(
X00398	XG.2000.1158-12	108-10-1	4-Methyl-2-pentanone (MIBK)	ND	mg / Kg	1	0.025		10/17/0(
X00398	XG.2000.1205-1	108-10-1	4-Methyl-2-pentanone (MIBK)	ND	mg / Kg	1	0.025		10/17/0(
X00398	XG.2000.1206-7	108-10-1	4-Methyl-2-pentanone (MIBK)	ND	mg / Kg	1	0.025		10/17/0(
X00398	XG.2000.1158-12	67-64-1	Acetone	ND	mg / Kg	1	0.05		10/17/0(
X00398	XG.2000.1205-1	67-64-1	Acetone	ND	mg / Kg	1	0.05		10/17/0(
X00398	XG.2000.1206-7	67-64-1	Acetone	ND	mg / Kg	1	0.05		10/17/0(
X00398	XG.2000.1158-12	107-02-8	Acrolein	ND	mg / Kg	1	0.1		10/17/0(
X00398	XG.2000.1205-1	107-02-8	Acrolein	ND	mg / Kg	1	0.1		10/17/0(
X00398	XG.2000.1206-7	107-02-8	Acrolein	ND	mg / Kg	1	0.1		10/17/0(
X00398	XG.2000.1158-12	107-13-1	Acrylonitrile	ND	mg / Kg	1	0.1		10/17/0(
X00398	XG.2000.1205-1	107-13-1	Acrylonitrile	ND	mg / Kg	1	0.1		10/17/0(
X00398	XG.2000.1206-7	107-13-1	Acrylonitrile	ND	mg / Kg	1	0.1		10/1
X00398	XG.2000.1158-12	71-43-2	Benzene	ND	mg / Kg	1	0.005		10/17/(

Quality Control Summary

Client: CH2MHILL

ct: 0010135 KAFB ST 106

Explanation of codes

D	Not applicable due to sample dilution
L	Not applicable due to MDL proximity

X00398	XG.2000.1205-1	71-43-2	Benzene	ND	mg / Kg	1	0.005	10/17/00
X00398	XG.2000.1206-7	71-43-2	Benzene	ND	mg / Kg	1	0.005	10/17/00
X00398	XG.2000.1158-12	75-27-4	Bromodichloromethane	ND	mg / Kg	1	0.005	10/17/00
X00398	XG.2000.1205-1	75-27-4	Bromodichloromethane	ND	mg / Kg	1	0.005	10/17/00
X00398	XG.2000.1206-7	75-27-4	Bromodichloromethane	ND	mg / Kg	1	0.005	10/17/00
X00398	XG.2000.1158-12	75-25-2	Bromoform	ND	mg / Kg	1	0.005	10/17/00
X00398	XG.2000.1205-1	75-25-2	Bromoform	ND	mg / Kg	1	0.005	10/17/00
X00398	XG.2000.1206-7	75-25-2	Bromoform	ND	mg / Kg	1	0.005	10/17/00
X00398	XG.2000.1158-12	74-83-9	Bromomethane	ND	mg / Kg	1	0.025	10/17/00
X00398	XG.2000.1205-1	74-83-9	Bromomethane	ND	mg / Kg	1	0.025	10/17/00
X00398	XG.2000.1206-7	74-83-9	Bromomethane	ND	mg / Kg	1	0.025	10/17/00
X00398	XG.2000.1158-12	75-15-0	Carbon disulfide	ND	mg / Kg	1	0.025	10/17/00
X00398	XG.2000.1205-1	75-15-0	Carbon disulfide	ND	mg / Kg	1	0.025	10/17/00
X00398	XG.2000.1206-7	75-15-0	Carbon disulfide	ND	mg / Kg	1	0.025	10/17/00
X00398	XG.2000.1158-12	56-23-5	Carbon tetrachloride	ND	mg / Kg	1	0.005	10/17/00
X00398	XG.2000.1205-1	56-23-5	Carbon tetrachloride	ND	mg / Kg	1	0.005	10/17/00
X00398	XG.2000.1206-7	56-23-5	Carbon tetrachloride	ND	mg / Kg	1	0.005	10/17/00
X00398	XG.2000.1158-12	108-90-7	Chlorobenzene	ND	mg / Kg	1	0.005	10/17/00
X00398	XG.2000.1205-1	108-90-7	Chlorobenzene	ND	mg / Kg	1	0.005	10/17/00
X00398	XG.2000.1206-7	108-90-7	Chlorobenzene	ND	mg / Kg	1	0.005	10/17/00
X00398	XG.2000.1158-12	124-48-1	Chlorodibromomethane	ND	mg / Kg	1	0.005	10/17/00
X00398	XG.2000.1205-1	124-48-1	Chlorodibromomethane	ND	mg / Kg	1	0.005	10/17/00
X00398	XG.2000.1206-7	124-48-1	Chlorodibromomethane	ND	mg / Kg	1	0.005	10/17/00
[illegible]8	XG.2000.1158-12	75-00-3	Chloroethane	ND	mg / Kg	1	0.025	10/17/00
[illegible]	XG.2000.1205-1	75-00-3	Chloroethane	ND	mg / Kg	1	0.025	10/17/00
X00398	XG.2000.1206-7	75-00-3	Chloroethane	ND	mg / Kg	1	0.025	10/17/00
X00398	XG.2000.1158-12	67-66-3	Chloroform	ND	mg / Kg	1	0.005	10/17/00
X00398	XG.2000.1205-1	67-66-3	Chloroform	ND	mg / Kg	1	0.005	10/17/00
X00398	XG.2000.1206-7	67-66-3	Chloroform	ND	mg / Kg	1	0.005	10/17/00
X00398	XG.2000.1158-12	74-87-3	Chloromethane	ND	mg / Kg	1	0.025	10/17/00
X00398	XG.2000.1205-1	74-87-3	Chloromethane	ND	mg / Kg	1	0.025	10/17/00
X00398	XG.2000.1206-7	74-87-3	Chloromethane	ND	mg / Kg	1	0.025	10/17/00
X00398	XG.2000.1158-12	156-59-2	cis-1,2 dichloroethene	ND	mg / Kg	1	0.005	10/17/00
X00398	XG.2000.1205-1	156-59-2	cis-1,2 dichloroethene	ND	mg / Kg	1	0.005	10/17/00
X00398	XG.2000.1206-7	156-59-2	cis-1,2 dichloroethene	ND	mg / Kg	1	0.005	10/17/00
X00398	XG.2000.1158-12	10061-01-5	cis-1,3 dichloropropene	ND	mg / Kg	1	0.005	10/17/00
X00398	XG.2000.1205-1	10061-01-5	cis-1,3 dichloropropene	ND	mg / Kg	1	0.005	10/17/00
X00398	XG.2000.1206-7	10061-01-5	cis-1,3 dichloropropene	ND	mg / Kg	1	0.005	10/17/00
X00398	XG.2000.1158-12	74-95-3	Dibromomethane	ND	mg / Kg	1	0.005	10/17/00
X00398	XG.2000.1205-1	74-95-3	Dibromomethane	ND	mg / Kg	1	0.005	10/17/00
X00398	XG.2000.1206-7	74-95-3	Dibromomethane	ND	mg / Kg	1	0.005	10/17/00
X00398	XG.2000.1158-12	97-63-2	Ethyl methacrylate	ND	mg / Kg	1	0.025	10/17/00
X00398	XG.2000.1205-1	97-63-2	Ethyl methacrylate	ND	mg / Kg	1	0.025	10/17/00
X00398	XG.2000.1206-7	97-63-2	Ethyl methacrylate	ND	mg / Kg	1	0.025	10/17/00
X00398	XG.2000.1158-12	100-41-4	Ethylbenzene	ND	mg / Kg	1	0.005	10/17/00
X00398	XG.2000.1205-1	100-41-4	Ethylbenzene	ND	mg / Kg	1	0.005	10/17/00
X00398	XG.2000.1206-7	100-41-4	Ethylbenzene	ND	mg / Kg	1	0.005	10/17/00
X00398	XG.2000.1158-12		Freon 113	ND	mg / Kg	1	0.025	10/17/00
X00398	XG.2000.1205-1		Freon 113	ND	mg / Kg	1	0.025	10/17/00
8	XG.2000.1206-7		Freon 113	ND	mg / Kg	1	0.025	10/17/00
[illegible]98	XG.2000.1158-12	75-71-8	Freon 12	ND	mg / Kg	1	0.05	10/17/00

Quality Control Summary

Client: CH2MHILL

Project: 0010135 KAFB ST 106

Explanation of codes

D Not applicable due to sample dilut

L Not applicable due to MDL proxin

X00398	XG.2000.1205-1	75-71-8	Freon 12	ND	mg / Kg	1	0.05	10/17/00
X00398	XG.2000.1206-7	75-71-8	Freon 12	ND	mg / Kg	1	0.05	10/17/00
X00398	XG.2000.1158-12	74-88-4	Iodomethane	ND	mg / Kg	1	0.025	10/17/00
X00398	XG.2000.1205-1	74-88-4	Iodomethane	ND	mg / Kg	1	0.025	10/17/00
X00398	XG.2000.1206-7	74-88-4	Iodomethane	ND	mg / Kg	1	0.025	10/17/00
X00398	XG.2000.1158-12	1634-04-4	Methyl t-butyl ether (MTBE)	ND	mg / Kg	1	0.005	10/17/00
X00398	XG.2000.1205-1	1634-04-4	Methyl t-butyl ether (MTBE)	ND	mg / Kg	1	0.005	10/17/00
X00398	XG.2000.1206-7	1634-04-4	Methyl t-butyl ether (MTBE)	ND	mg / Kg	1	0.005	10/17/00
X00398	XG.2000.1158-12	75-09-2	Methylene chloride	ND	mg / Kg	1	0.05	10/17/00
X00398	XG.2000.1205-1	75-09-2	Methylene chloride	ND	mg / Kg	1	0.05	10/17/00
X00398	XG.2000.1206-7	75-09-2	Methylene chloride	ND	mg / Kg	1	0.05	10/17/00
X00398	XG.2000.1158-12	91-20-3	Naphthalene	ND	mg / Kg	1	0.025	10/17/00
X00398	XG.2000.1205-1	91-20-3	Naphthalene	ND	mg / Kg	1	0.025	10/17/00
X00398	XG.2000.1206-7	91-20-3	Naphthalene	ND	mg / Kg	1	0.025	10/17/00
X00398	XG.2000.1158-12	95-47-6	o-Xylene	ND	mg / Kg	1	0.005	10/17/00
X00398	XG.2000.1205-1	95-47-6	o-Xylene	ND	mg / Kg	1	0.005	10/17/00
X00398	XG.2000.1206-7	95-47-6	o-Xylene	ND	mg / Kg	1	0.005	10/17/00
X00398	XG.2000.1158-12	108-38-3/106-42	p/m Xylenes	ND	mg / Kg	1	0.01	10/17/00
X00398	XG.2000.1205-1	108-38-3/106-42	p/m Xylenes	ND	mg / Kg	1	0.01	10/17/00
X00398	XG.2000.1206-7	108-38-3/106-42	p/m Xylenes	ND	mg / Kg	1	0.01	10/17/00
X00398	XG.2000.1158-12	100-42-5	Styrene	ND	mg / Kg	1	0.005	10/17/00
X00398	XG.2000.1205-1	100-42-5	Styrene	ND	mg / Kg	1	0.005	10/17/00
X00398	XG.2000.1206-7	100-42-5	Styrene	ND	mg / Kg	1	0.005	10/17
X00398	XG.2000.1158-12	156-60-5	t-1,2 Dichloroethene	ND	mg / Kg	1	0.005	10/17/00
X00398	XG.2000.1205-1	156-60-5	t-1,2 Dichloroethene	ND	mg / Kg	1	0.005	10/17/00
X00398	XG.2000.1206-7	156-60-5	t-1,2 Dichloroethene	ND	mg / Kg	1	0.005	10/17/00
X00398	XG.2000.1158-12	10061-02-6	t-1,3 Dichloropropene	ND	mg / Kg	1	0.005	10/17/00
X00398	XG.2000.1205-1	10061-02-6	t-1,3 Dichloropropene	ND	mg / Kg	1	0.005	10/17/00
X00398	XG.2000.1206-7	10061-02-6	t-1,3 Dichloropropene	ND	mg / Kg	1	0.005	10/17/00
X00398	XG.2000.1158-12	127-18-4	Tetrachloroethene	ND	mg / Kg	1	0.005	10/17/00
X00398	XG.2000.1205-1	127-18-4	Tetrachloroethene	ND	mg / Kg	1	0.005	10/17/00
X00398	XG.2000.1206-7	127-18-4	Tetrachloroethene	ND	mg / Kg	1	0.005	10/17/00
X00398	XG.2000.1158-12	108-88-3	Toluene	ND	mg / Kg	1	0.005	10/17/00
X00398	XG.2000.1205-1	108-88-3	Toluene	ND	mg / Kg	1	0.005	10/17/00
X00398	XG.2000.1206-7	108-88-3	Toluene	ND	mg / Kg	1	0.005	10/17/00
X00398	XG.2000.1158-12	79-01-6	Trichloroethene	ND	mg / Kg	1	0.005	10/17/00
X00398	XG.2000.1205-1	79-01-6	Trichloroethene	ND	mg / Kg	1	0.005	10/17/00
X00398	XG.2000.1206-7	79-01-6	Trichloroethene	ND	mg / Kg	1	0.005	10/17/00
X00398	XG.2000.1158-12	75-69-4	Trichlorofluoromethane	ND	mg / Kg	1	0.025	10/17/00
X00398	XG.2000.1205-1	75-69-4	Trichlorofluoromethane	ND	mg / Kg	1	0.025	10/17/00
X00398	XG.2000.1206-7	75-69-4	Trichlorofluoromethane	ND	mg / Kg	1	0.025	10/17/00
X00398	XG.2000.1158-12	108-05-4	Vinyl acetate	ND	mg / Kg	1	0.025	10/17/00
X00398	XG.2000.1205-1	108-05-4	Vinyl acetate	ND	mg / Kg	1	0.025	10/17/00
X00398	XG.2000.1206-7	108-05-4	Vinyl acetate	ND	mg / Kg	1	0.025	10/17/00
X00398	XG.2000.1158-12	75-01-4	Vinyl chloride	ND	mg / Kg	1	0.025	10/17/00
X00398	XG.2000.1205-1	75-01-4	Vinyl chloride	ND	mg / Kg	1	0.025	10/17/00
X00398	XG.2000.1206-7	75-01-4	Vinyl chloride	ND	mg / Kg	1	0.025	10/17/00

Quality Control Summary

nt: CH2MHILL

oject: 0010135 KAFB ST 106

Explanation of codes

D *Not applicable due to sample dilution*

L *Not applicable due to MDL proximity*

X00398-028 **SW846 8260A Purgeable VOCs by GC/MS**

X00398	XG.2000.1205-3	75-34-3	1,1 Dichloroethane	ND	mg / Kg	1	0.005	10/26/00
X00398	XG.2000.1206-9	75-34-3	1,1 Dichloroethane	ND	mg / Kg	1	0.005	10/26/00
X00398	XG.2000.1205-3	75-34-3	1,1 Dichloroethene	ND	mg / Kg	1	0.005	10/26/00
X00398	XG.2000.1206-9	75-34-3	1,1 Dichloroethene	ND	mg / Kg	1	0.005	10/26/00
X00398	XG.2000.1205-3	71-55-6	1,1,1 Trichloroethane	ND	mg / Kg	1	0.005	10/26/00
X00398	XG.2000.1206-9	71-55-6	1,1,1 Trichloroethane	ND	mg / Kg	1	0.005	10/26/00
X00398	XG.2000.1205-3	630-20-6	1,1,1,2 Tetrachloroethane	ND	mg / Kg	1	0.005	10/26/00
X00398	XG.2000.1206-9	630-20-6	1,1,1,2 Tetrachloroethane	ND	mg / Kg	1	0.005	10/26/00
X00398	XG.2000.1205-3	79-00-5	1,1,2 Trichloroethane	ND	mg / Kg	1	0.005	10/26/00
X00398	XG.2000.1206-9	79-00-5	1,1,2 Trichloroethane	ND	mg / Kg	1	0.005	10/26/00
X00398	XG.2000.1205-3	79-34-5	1,1,2,2 Tetrachloroethane	ND	mg / Kg	1	0.005	10/26/00
X00398	XG.2000.1206-9	79-34-5	1,1,2,2 Tetrachloroethane	ND	mg / Kg	1	0.005	10/26/00
X00398	XG.2000.1205-3	106-93-4	1,2 Dibromoethane (EDB)	ND	mg / Kg	1	0.005	10/26/00
X00398	XG.2000.1206-9	106-93-4	1,2 Dibromoethane (EDB)	ND	mg / Kg	1	0.005	10/26/00
X00398	XG.2000.1205-3	95-50-1	1,2 Dichlorobenzene	ND	mg / Kg	1	0.005	10/26/00
X00398	XG.2000.1206-9	95-50-1	1,2 Dichlorobenzene	ND	mg / Kg	1	0.005	10/26/00
X00398	XG.2000.1205-3	107-06-2	1,2 Dichloroethane	ND	mg / Kg	1	0.005	10/26/00
X00398	XG.2000.1206-9	107-06-2	1,2 Dichloroethane	ND	mg / Kg	1	0.005	10/26/00
X00398	XG.2000.1205-3	78-87-5	1,2 Dichloropropane	ND	mg / Kg	1	0.005	10/26/00
X00398	XG.2000.1206-9	78-87-5	1,2 Dichloropropane	ND	mg / Kg	1	0.005	10/26/00
X00398	XG.2000.1205-3	96-18-4	1,2,3 Trichloropropane	ND	mg / Kg	1	0.005	10/26/00
[illegible]98	XG.2000.1206-9	96-18-4	1,2,3 Trichloropropane	ND	mg / Kg	1	0.005	10/26/00
[illegible]98	XG.2000.1205-3	95-63-6	1,2,4-Trimethylbenzene	ND	mg / Kg	1	0.005	10/26/00
X00398	XG.2000.1206-9	95-63-6	1,2,4-Trimethylbenzene	ND	mg / Kg	1	0.005	10/26/00
X00398	XG.2000.1205-3	541-73-1	1,3 Dichlorobenzene	ND	mg / Kg	1	0.005	10/26/00
X00398	XG.2000.1206-9	541-73-1	1,3 Dichlorobenzene	ND	mg / Kg	1	0.005	10/26/00
X00398	XG.2000.1205-3	108-67-8	1,3,5-Trimethylbenzene	ND	mg / Kg	1	0.005	10/26/00
X00398	XG.2000.1206-9	108-67-8	1,3,5-Trimethylbenzene	ND	mg / Kg	1	0.005	10/26/00
X00398	XG.2000.1205-3	764-41-0	1,4 Dichloro-2-butene	ND	mg / Kg	1	0.05	10/26/00
X00398	XG.2000.1206-9	764-41-0	1,4 Dichloro-2-butene	ND	mg / Kg	1	0.05	10/26/00
X00398	XG.2000.1205-3	106-46-7	1,4 Dichlorobenzene	ND	mg / Kg	1	0.005	10/26/00
X00398	XG.2000.1206-9	106-46-7	1,4 Dichlorobenzene	ND	mg / Kg	1	0.005	10/26/00
X00398	XG.2000.1205-3	78-93-3	2-Butanone (MEK)	ND	mg / Kg	1	0.025	10/26/00
X00398	XG.2000.1206-9	78-93-3	2-Butanone (MEK)	ND	mg / Kg	1	0.025	10/26/00
X00398	XG.2000.1205-3	110-75-8	2-Chloroethylvinylether	ND	mg / Kg	1	0.025	10/26/00
X00398	XG.2000.1206-9	110-75-8	2-Chloroethylvinylether	ND	mg / Kg	1	0.025	10/26/00
X00398	XG.2000.1205-3	591-78-6	2-Hexanone (MBK)	ND	mg / Kg	1	0.025	10/26/00
X00398	XG.2000.1206-9	591-78-6	2-Hexanone (MBK)	ND	mg / Kg	1	0.025	10/26/00
X00398	XG.2000.1205-3	108-10-1	4-Methyl-2-pentanone (MIBK)	ND	mg / Kg	1	0.025	10/26/00
X00398	XG.2000.1206-9	108-10-1	4-Methyl-2-pentanone (MIBK)	ND	mg / Kg	1	0.025	10/26/00
X00398	XG.2000.1205-3	67-64-1	Acetone	ND	mg / Kg	1	0.05	10/26/00
X00398	XG.2000.1206-9	67-64-1	Acetone	ND	mg / Kg	1	0.05	10/26/00
X00398	XG.2000.1205-3	107-02-8	Acrolein	ND	mg / Kg	1	0.1	10/26/00
X00398	XG.2000.1206-9	107-02-8	Acrolein	ND	mg / Kg	1	0.1	10/26/00
X00398	XG.2000.1205-3	107-13-1	Acrylonitrile	ND	mg / Kg	1	0.1	10/26/00
X00398	XG.2000.1206-9	107-13-1	Acrylonitrile	ND	mg / Kg	1	0.1	10/26/00
X00398	XG.2000.1205-3	71-43-2	Benzene	ND	mg / Kg	1	0.005	10/26/00
[illegible]98	XG.2000.1206-9	71-43-2	Benzene	ND	mg / Kg	1	0.005	10/26/00
[illegible]398	XG.2000.1205-3	75-27-4	Bromodichloromethane	ND	mg / Kg	1	0.005	10/26/00

Quality Control Summary

Client: CH2MHILL

Project: 0010135 KAFB ST 106

Explanation of codes

D Not applicable due to sample dilu

L Not applicable due to MDL proxim

X00398	XG.2000.1206-9	75-27-4	Bromodichloromethane	ND	mg / Kg	1	0.005	10/26/0
X00398	XG.2000.1205-3	75-25-2	Bromoform	ND	mg / Kg	1	0.005	10/26/0
X00398	XG.2000.1206-9	75-25-2	Bromoform	ND	mg / Kg	1	0.005	10/26/0
X00398	XG.2000.1205-3	74-83-9	Bromomethane	ND	mg / Kg	1	0.025	10/26/0
X00398	XG.2000.1206-9	74-83-9	Bromomethane	ND	mg / Kg	1	0.025	10/26/0
X00398	XG.2000.1205-3	75-15-0	Carbon disulfide	ND	mg / Kg	1	0.025	10/26/0
X00398	XG.2000.1206-9	75-15-0	Carbon disulfide	ND	mg / Kg	1	0.025	10/26/0
X00398	XG.2000.1205-3	56-23-5	Carbon tetrachloride	ND	mg / Kg	1	0.005	10/26/0
X00398	XG.2000.1206-9	56-23-5	Carbon tetrachloride	ND	mg / Kg	1	0.005	10/26/0
X00398	XG.2000.1205-3	108-90-7	Chlorobenzene	ND	mg / Kg	1	0.005	10/26/0
X00398	XG.2000.1206-9	108-90-7	Chlorobenzene	ND	mg / Kg	1	0.005	10/26/0
X00398	XG.2000.1205-3	124-48-1	Chlorodibromomethane	ND	mg / Kg	1	0.005	10/26/0
X00398	XG.2000.1206-9	124-48-1	Chlorodibromomethane	ND	mg / Kg	1	0.005	10/26/0
X00398	XG.2000.1205-3	75-00-3	Chloroethane	ND	mg / Kg	1	0.025	10/26/0
X00398	XG.2000.1206-9	75-00-3	Chloroethane	ND	mg / Kg	1	0.025	10/26/0
X00398	XG.2000.1205-3	67-66-3	Chloroform	ND	mg / Kg	1	0.005	10/26/0
X00398	XG.2000.1206-9	67-66-3	Chloroform	ND	mg / Kg	1	0.005	10/26/0
X00398	XG.2000.1205-3	74-87-3	Chloromethane	ND	mg / Kg	1	0.025	10/26/0
X00398	XG.2000.1206-9	74-87-3	Chloromethane	ND	mg / Kg	1	0.025	10/26/0
X00398	XG.2000.1205-3	156-59-2	cis-1,2 dichloroethene	ND	mg / Kg	1	0.005	10/26/0
X00398	XG.2000.1206-9	156-59-2	cis-1,2 dichloroethene	ND	mg / Kg	1	0.005	10/26/0
X00398	XG.2000.1205-3	10061-01-5	cis-1,3 dichloropropene	ND	mg / Kg	1	0.005	10/26/0
X00398	XG.2000.1206-9	10061-01-5	cis-1,3 dichloropropene	ND	mg / Kg	1	0.005	10/26/0
X00398	XG.2000.1205-3	74-95-3	Dibromomethane	ND	mg / Kg	1	0.005	10/26
X00398	XG.2000.1206-9	74-95-3	Dibromomethane	ND	mg / Kg	1	0.005	10/26
X00398	XG.2000.1205-3	97-63-2	Ethyl methacrylate	ND	mg / Kg	1	0.025	10/26/0
X00398	XG.2000.1206-9	97-63-2	Ethyl methacrylate	ND	mg / Kg	1	0.025	10/26/0
X00398	XG.2000.1205-3	100-41-4	Ethylbenzene	ND	mg / Kg	1	0.005	10/26/0
X00398	XG.2000.1206-9	100-41-4	Ethylbenzene	ND	mg / Kg	1	0.005	10/26/0
X00398	XG.2000.1205-3		Freon 113	ND	mg / Kg	1	0.025	10/26/0
X00398	XG.2000.1206-9		Freon 113	ND	mg / Kg	1	0.025	10/26/0
X00398	XG.2000.1205-3	75-71-8	Freon 12	ND	mg / Kg	1	0.05	10/26/0
X00398	XG.2000.1206-9	75-71-8	Freon 12	ND	mg / Kg	1	0.05	10/26/0
X00398	XG.2000.1205-3	74-88-4	Iodomethane	ND	mg / Kg	1	0.025	10/26/0
X00398	XG.2000.1206-9	74-88-4	Iodomethane	ND	mg / Kg	1	0.025	10/26/0
X00398	XG.2000.1205-3	1634-04-4	Methyl t-butyl ether (MTBE)	ND	mg / Kg	1	0.005	10/26/0
X00398	XG.2000.1206-9	1634-04-4	Methyl t-butyl ether (MTBE)	ND	mg / Kg	1	0.005	10/26/0
X00398	XG.2000.1205-3	75-09-2	Methylene chloride	ND	mg / Kg	1	0.05	10/26/0
X00398	XG.2000.1206-9	75-09-2	Methylene chloride	ND	mg / Kg	1	0.05	10/26/0
X00398	XG.2000.1205-3	91-20-3	Naphthalene	ND	mg / Kg	1	0.025	10/26/0
X00398	XG.2000.1206-9	91-20-3	Naphthalene	ND	mg / Kg	1	0.025	10/26/0
X00398	XG.2000.1205-3	95-47-6	o-Xylene	ND	mg / Kg	1	0.005	10/26/0
X00398	XG.2000.1206-9	95-47-6	o-Xylene	ND	mg / Kg	1	0.005	10/26/0
X00398	XG.2000.1205-3	108-38-3/106-42	p/m Xylenes	ND	mg / Kg	1	0.01	10/26/0
X00398	XG.2000.1206-9	108-38-3/106-42	p/m Xylenes	ND	mg / Kg	1	0.01	10/26/0
X00398	XG.2000.1205-3	100-42-5	Styrene	ND	mg / Kg	1	0.005	10/26/0
X00398	XG.2000.1206-9	100-42-5	Styrene	ND	mg / Kg	1	0.005	10/26/0
X00398	XG.2000.1205-3	156-60-5	t-1,2 Dichloroethene	ND	mg / Kg	1	0.005	10/26/
X00398	XG.2000.1206-9	156-60-5	t-1,2 Dichloroethene	ND	mg / Kg	1	0.005	10/26

Quality Control Summary

Explanation of codes

D	*Not applicable due to sample dilution*
L	*Not applicable due to MDL proximity*

Client: **CH2MHILL**

Project: **0010135** **KAFB ST 106**

X00398	XG.2000.1205-3	10061-02-6	t-1,3 Dichloropropene	ND	mg / Kg	1	0.005		10/26/00
X00398	XG.2000.1206-9	10061-02-6	t-1,3 Dichloropropene	ND	mg / Kg	1	0.005		10/26/00
X00398	XG.2000.1205-3	127-18-4	Tetrachloroethene	ND	mg / Kg	1	0.005		10/26/00
X00398	XG.2000.1206-9	127-18-4	Tetrachloroethene	ND	mg / Kg	1	0.005		10/26/00
X00398	XG.2000.1205-3	108-88-3	Toluene	ND	mg / Kg	1	0.005		10/26/00
X00398	XG.2000.1206-9	108-88-3	Toluene	ND	mg / Kg	1	0.005		10/26/00
X00398	XG.2000.1205-3	79-01-6	Trichloroethene	ND	mg / Kg	1	0.005		10/26/00
X00398	XG.2000.1206-9	79-01-6	Trichloroethene	ND	mg / Kg	1	0.005		10/26/00
X00398	XG.2000.1205-3	75-69-4	Trichlorofluoromethane	ND	mg / Kg	1	0.025		10/26/00
X00398	XG.2000.1206-9	75-69-4	Trichlorofluoromethane	ND	mg / Kg	1	0.025		10/26/00
X00398	XG.2000.1205-3	108-05-4	Vinyl acetate	ND	mg / Kg	1	0.025		10/26/00
X00398	XG.2000.1206-9	108-05-4	Vinyl acetate	ND	mg / Kg	1	0.025		10/26/00
X00398	XG.2000.1205-3	75-01-4	Vinyl chloride	ND	mg / Kg	1	0.025		10/26/00
X00398	XG.2000.1206-9	75-01-4	Vinyl chloride	ND	mg / Kg	1	0.025		10/26/00
X00403-001		**SW846 ME/8015A Diesel Range Organics by GC/FID**							
X00403	XG.2000.1139-1		Diesel Range Organics	ND	mg / Kg	1	25		10/13/00
X00403-017		**SW846 ME/8015A Diesel Range Organics by GC/FID**							
X00403	XG.2000.1150-1		Diesel Range Organics	ND	mg / Kg	1	25		10/16/00

QC Type **MS: Matrix Spike** QC Matrix **SOLID**

QC Group	Run Sequence	CAS #	Analyte	Result	Units	Dilution Factor	Detection Limit	Code	Run Date
X00367-009		**SW846 3550A/8270B SVOCs by GC/MS**							
X00367	XG.2000.1080-7	120-82-1	1,2,4-Trichlorobenzene	81	% Recovery	1	NA		09/30/00
X00367	XG.2000.1080-7	106-46-7	1,4-Dichlorobenzene	78	% Recovery	1	NA		09/30/00
X00367	XG.2000.1080-7	121-14-2	2,4-Dinitrotoluene	76	% Recovery	1	NA		09/30/00
X00367	XG.2000.1080-7	95-57-8	2-Chlorophenol	93	% Recovery	1	NA		09/30/00
X00367	XG.2000.1080-7	59-50-7	4-Chloro-3-methylphenol	92	% Recovery	1	NA		09/30/00
X00367	XG.2000.1080-7	100-02-7	4-Nitrophenol	89	% Recovery	1	NA		09/30/00
X00367	XG.2000.1080-7	83-32-9	Acenaphthene	88	% Recovery	1	NA		09/30/00
X00367	XG.2000.1080-7	117-84-0	di-n-Octylpthalate	174	% Recovery	1	NA		09/30/00
X00367	XG.2000.1080-7	621-64-7	n-Nitroso-di-n-propylamine	84	% Recovery	1	NA		09/30/00
X00367	XG.2000.1080-7	87-86-5	Pentachlorophenol	88	% Recovery	1	NA		09/30/00
X00367	XG.2000.1080-7	108-95-2	Phenol	86	% Recovery	1	NA		09/30/00
X00367	XG.2000.1080-7	129-00-0	Pyrene	120	% Recovery	1	NA		09/30/00
X00385-012		**SW846 5030A/8015A GRO by GC/FID**							
X00385	XG.2000.1096-9		Gasoline Range Organics	110	% Recovery	20	NA		10/03/00
X00392-005		**SW846 5030A/8021B Purgeable VOCs by GC/PID**							
X00392	XG.2000.1112-5	71-43-2	Benzene	104	% Recovery	1	NA		10/05/00
X00392	XG.2000.1112-5	100-41-4	Ethylbenzene	104	% Recovery	1	NA		10/05/00
X00392	XG.2000.1112-5	95-47-6	o-Xylene	106	% Recovery	1	NA		10/05/00
X00392	XG.2000.1112-5	108-38-3/106-42	p/m-Xylenes	105	% Recovery	1	NA		10/05/00
X00392	XG.2000.1112-5	108-88-3	Toluene	103	% Recovery	1	NA		10/05/00
X00398-016		**SW846 8260A Purgeable VOCs by GC/MS**							
X00398	XG.2000.1158-10	75-34-3	1,1 Dichloroethene	123	% Recovery	1	NA		10/17/00

Client: CH2MHILL

Project: 0010135 KAFB ST 106

Explanation of codes

D	*Not applicable due to sample dilutio*
L	*Not applicable due to MDL proxim*

X00398	XG.2000.1206-5	75-34-3	1,1 Dichloroethene	123	% Recovery	1	NA		10/17/00
X00398	XG.2000.1158-10	106-46-7	1,4 Dichlorobenzene	103	% Recovery	1	NA		10/17/00
X00398	XG.2000.1206-5	106-46-7	1,4 Dichlorobenzene	103	% Recovery	1	NA		10/17/00
X00398	XG.2000.1158-10	71-43-2	Benzene	118	% Recovery	1	NA		10/17/00
X00398	XG.2000.1206-5	71-43-2	Benzene	118	% Recovery	1	NA		10/17/00
X00398	XG.2000.1158-10	108-90-7	Chlorobenzene	108	% Recovery	1	NA		10/17/00
X00398	XG.2000.1206-5	108-90-7	Chlorobenzene	108	% Recovery	1	NA		10/17/00
X00398	XG.2000.1158-10	108-88-3	Toluene	116	% Recovery	1	NA		10/17/00
X00398	XG.2000.1206-5	108-88-3	Toluene	116	% Recovery	1	NA		10/17/00
X00398	XG.2000.1158-10	79-01-6	Trichloroethene	113	% Recovery	1	NA		10/17/00
X00398	XG.2000.1206-5	79-01-6	Trichloroethene	113	% Recovery	1	NA		10/17/00
X00403-005		**SW846 ME/8015A Diesel Range Organics by GC/FID**							
X00403	XG.2000.1139-5		Diesel Range Organics	107	% Recovery	1	NA		10/13/00

QC Type **MSD: Matrix Spike Duplicate Accuracy** QC Matrix **SOLID**

QC Group	Run Sequence	CAS #	Analyte	Result	Units	Dilution Factor	Detection Limit	Code	Run Date
X00367-010		**SW846 3550A/8270B SVOCs by GC/MS**							
X00367	XG.2000.1080-8	120-82-1	1,2,4-Trichlorobenzene	78	% Recovery	1	NA		09/30/00
X00367	XG.2000.1080-8	106-46-7	1,4-Dichlorobenzene	73	% Recovery	1	NA		09/30/00
X00367	XG.2000.1080-8	121-14-2	2,4-Dinitrotoluene	63	% Recovery	1	NA		09/30/
X00367	XG.2000.1080-8	95-57-8	2-Chlorophenol	87	% Recovery	1	NA		09/30/
X00367	XG.2000.1080-8	59-50-7	4-Chloro-3-methylphenol	91	% Recovery	1	NA		09/30/00
X00367	XG.2000.1080-8	100-02-7	4-Nitrophenol	92	% Recovery	1	NA		09/30/00
X00367	XG.2000.1080-8	83-32-9	Acenaphthene	90	% Recovery	1	NA		09/30/00
X00367	XG.2000.1080-8	117-84-0	di-n-Octylpthalate	133	% Recovery	1	NA		09/30/00
X00367	XG.2000.1080-8	621-64-7	n-Nitroso-di-n-propylamine	77	% Recovery	1	NA		09/30/00
X00367	XG.2000.1080-8	87-86-5	Pentachlorophenol	85	% Recovery	1	NA		09/30/00
X00367	XG.2000.1080-8	108-95-2	Phenol	81	% Recovery	1	NA		09/30/00
X00367	XG.2000.1080-8	129-00-0	Pyrene	103	% Recovery	1	NA		09/30/00
X00385-013		**SW846 5030A/8015A GRO by GC/FID**							
X00385	XG.2000.1096-10		Gasoline Range Organics	94	% Recovery	20	NA		10/03/00
X00392-006		**SW846 5030A/8021B Purgeable VOCs by GC/PID**							
X00392	XG.2000.1112-6	71-43-2	Benzene	100	% Recovery	1	NA		10/05/00
X00392	XG.2000.1112-6	100-41-4	Ethylbenzene	100	% Recovery	1	NA		10/05/00
X00392	XG.2000.1112-6	95-47-6	o-Xylene	103	% Recovery	1	NA		10/05/00
X00392	XG.2000.1112-6	108-38-3/106-42	p/m-Xylenes	101	% Recovery	1	NA		10/05/00
X00392	XG.2000.1112-6	108-88-3	Toluene	100	% Recovery	1	NA		10/05/00
X00398-017		**SW846 8260A Purgeable VOCs by GC/MS**							
X00398	XG.2000.1158-11	75-34-3	1,1 Dichloroethene	116	% Recovery	1	NA		10/17/00
X00398	XG.2000.1206-6	75-34-3	1,1 Dichloroethene	116	% Recovery	1	NA		10/17/00
X00398	XG.2000.1158-11	106-46-7	1,4 Dichlorobenzene	99	% Recovery	1	NA		10/17/00
X00398	XG.2000.1206-6	106-46-7	1,4 Dichlorobenzene	99	% Recovery	1	NA		10/17/00
X00398	XG.2000.1158-11	71-43-2	Benzene	110	% Recovery	1	NA		10/17/00
X00398	XG.2000.1206-6	71-43-2	Benzene	110	% Recovery	1	NA		10/17/

Quality Control Summary

Explanation of codes

D *Not applicable due to sample dilution*
L *Not applicable due to MDL proximity*

Client: CH2MHILL
Project: 0010135 KAFB ST 106

X00398	XG.2000.1158-11	108-90-7	Chlorobenzene	105	% Recovery	1	NA		10/17/00
X00398	XG.2000.1206-6	108-90-7	Chlorobenzene	105	% Recovery	1	NA		10/17/00
X00398	XG.2000.1158-11	108-88-3	Toluene	110	% Recovery	1	NA		10/17/00
X00398	XG.2000.1206-6	108-88-3	Toluene	110	% Recovery	1	NA		10/17/00
X00398	XG.2000.1158-11	79-01-6	Trichloroethene	106	% Recovery	1	NA		10/17/00
X00398	XG.2000.1206-6	79-01-6	Trichloroethene	106	% Recovery	1	NA		10/17/00
X00403-006		**SW846 ME/8015A Diesel Range Organics by GC/FID**							
X00403	XG.2000.1139-6		Diesel Range Organics	107	% Recovery	1	NA		10/13/00

QC Type **MSD: Matrix Spike Duplicate Precision** QC Matrix **SOLID**

QC Group	Run Sequence	CAS #	Analyte	Result	Units	Dilution Factor	Detection Limit	Code	Run Date
X00367-010		**SW846 3550A/8270B SVOCs by GC/MS**							
X00367	XG.2000.1080-8	120-82-1	1,2,4-Trichlorobenzene	4	RPD	1	NA		09/30/00
X00367	XG.2000.1080-8	106-46-7	1,4-Dichlorobenzene	6	RPD	1	NA		09/30/00
X00367	XG.2000.1080-8	121-14-2	2,4-Dinitrotoluene	18	RPD	1	NA		09/30/00
X00367	XG.2000.1080-8	95-57-8	2-Chlorophenol	7	RPD	1	NA		09/30/00
X00367	XG.2000.1080-8	59-50-7	4-Chloro-3-methylphenol	1	RPD	1	NA		09/30/00
X00367	XG.2000.1080-8	100-02-7	4-Nitrophenol	3	RPD	1	NA		09/30/00
X00367	XG.2000.1080-8	83-32-9	Acenaphthene	2	RPD	1	NA		09/30/00
[illegible]7	XG.2000.1080-8	117-84-0	di-n-Octylpthalate	27	RPD	1	NA		09/30/00
X00367	XG.2000.1080-8	621-64-7	n-Nitroso-di-n-propylamine	8	RPD	1	NA		09/30/00
X00367	XG.2000.1080-8	87-86-5	Pentachlorophenol	3	RPD	1	NA		09/30/00
X00367	XG.2000.1080-8	108-95-2	Phenol	6	RPD	1	NA		09/30/00
X00367	XG.2000.1080-8	129-00-0	Pyrene	15	RPD	1	NA		09/30/00
X00385-013		**SW846 5030A/8015A GRO by GC/FID**							
X00385	XG.2000.1096-10		Gasoline Range Organics	15	RPD	20	NA		10/03/00
X00392-006		**SW846 5030A/8021B Purgeable VOCs by GC/PID**							
X00392	XG.2000.1112-6	71-43-2	Benzene	4	RPD	1	NA		10/05/00
X00392	XG.2000.1112-6	100-41-4	Ethylbenzene	4	RPD	1	NA		10/05/00
X00392	XG.2000.1112-6	95-47-6	o-Xylene	3	RPD	1	NA		10/05/00
X00392	XG.2000.1112-6	108-38-3/106-42	p/m-Xylenes	4	RPD	1	NA		10/05/00
X00392	XG.2000.1112-6	108-88-3	Toluene	4	RPD	1	NA		10/05/00
X00398-017		**SW846 8260A Purgeable VOCs by GC/MS**							
X00398	XG.2000.1158-11	75-34-3	1,1 Dichloroethene	6	RPD	1	NA		10/17/00
X00398	XG.2000.1206-6	75-34-3	1,1 Dichloroethene	6	RPD	1	NA		10/17/00
X00398	XG.2000.1158-11	106-46-7	1,4 Dichlorobenzene	4	RPD	1	NA		10/17/00
X00398	XG.2000.1206-6	106-46-7	1,4 Dichlorobenzene	4	RPD	1	NA		10/17/00
X00398	XG.2000.1158-11	71-43-2	Benzene	6	RPD	1	NA		10/17/00
X00398	XG.2000.1206-6	71-43-2	Benzene	6	RPD	1	NA		10/17/00
X00398	XG.2000.1158-11	108-90-7	Chlorobenzene	3	RPD	1	NA		10/17/00
X00398	XG.2000.1206-6	108-90-7	Chlorobenzene	3	RPD	1	NA		10/17/00
X00398	XG.2000.1158-11	108-88-3	Toluene	6	RPD	1	NA		10/17/00
[illegible]398	XG.2000.1206-6	108-88-3	Toluene	6	RPD	1	NA		10/17/00
[illegible]98	XG.2000.1158-11	79-01-6	Trichloroethene	6	RPD	1	NA		10/17/00

Quality Control Summary

Client: **CH2MHILL**

Project: **0010135** **KAFB ST 106**

Explanation of codes

D *Not applicable due to sample dilu*

L *Not applicable due to MDL proxim*

X00398	XG.2000.1206-6	79-01-6	Trichloroethene	6	RPD	1	NA	10/17/00
X00403-006		**SW846 ME/8015A**	**Diesel Range Organics by GC/FID**					
X00403	XG.2000.1139-6		Diesel Range Organics	< 1	RPD	1	NA	10/13/00

Quality Control Summary

Client: CH2MHILL

ct: 0010135 KAFB ST 106

Explanation of codes

D	*Not applicable due to sample dilution*
L	*Not applicable due to MDL proximity*

QC Type **LCS: Lab Control Spike** QC Matrix **WATER**

QC Group	Run Sequence	CAS #	Analyte	Result	Units	Dilution Factor	Detection Limit	Code	Run Date
X00388-004		**SW846 8260A Purgeable VOCs by GC/MS**							
X00388	XG.2000.1100-4	75-34-3	1,1 Dichloroethene	110	% Recovery	1	NA		10/03/00
X00388	XG.2000.1100-4	106-46-7	1,4 Dichlorobenzene	100	% Recovery	1	NA		10/03/00
X00388	XG.2000.1100-4	71-43-2	Benzene	112	% Recovery	1	NA		10/03/00
X00388	XG.2000.1100-4	108-90-7	Chlorobenzene	109	% Recovery	1	NA		10/03/00
X00388	XG.2000.1100-4	108-88-3	Toluene	113	% Recovery	1	NA		10/03/00
X00388	XG.2000.1100-4	79-01-6	Trichloroethene	110	% Recovery	1	NA		10/03/00
X00400-002		**SW846 3510B/8270B SVOCs by GC/MS**							
X00400	XG.2000.1153-2	120-82-1	1,2,4-Trichlorobenzene	54	% Recovery	1	NA		10/16/00
X00400	XG.2000.1153-2	106-46-7	1,4-Dichlorobenzene	51	% Recovery	1	NA		10/16/00
X00400	XG.2000.1153-2	121-14-2	2,4-Dinitrotoluene	75	% Recovery	1	NA		10/16/00
X00400	XG.2000.1153-2	95-57-8	2-Chlorophenol	51	% Recovery	1	NA		10/16/00
X00400	XG.2000.1153-2	59-50-7	4-Chloro-3-methylphenol	53	% Recovery	1	NA		10/16/00
X00400	XG.2000.1153-2	100-02-7	4-Nitrophenol	31	% Recovery	1	NA		10/16/00
X00400	XG.2000.1153-2	83-32-9	Acenaphthene	76	% Recovery	1	NA		10/16/00
X00400	XG.2000.1153-2	117-84-0	di-n-Octylpthalate	72	% Recovery	1	NA		10/16/00
X00400	XG.2000.1153-2	621-64-7	n-Nitroso-di-n-propylamine	72	% Recovery	1	NA		10/16/00
	XG.2000.1153-2	87-86-5	Pentachlorophenol	74	% Recovery	1	NA		10/16/00
X00400	XG.2000.1153-2	108-95-2	Phenol	26	% Recovery	1	NA		10/16/00
X00400	XG.2000.1153-2	129-00-0	Pyrene	91	% Recovery	1	NA		10/16/00
X00404-002		**SW846 ME/8015A Diesel Range Organics by GC/FID**							
X00404	XG.2000.1139-18		Diesel Range Organics	109	% Recovery	1	NA		10/14/00
X00405-002		**SW846 5030A/8015A GRO by GC/FID**							
X00405	XG.2000.1141-11		Gasoline Range Organics	96	% Recovery	1	NA		10/16/00

QC Type **LCSD: Lab Control Spike Duplicate Accuracy** QC Matrix **WATER**

QC Group	Run Sequence	CAS #	Analyte	Result	Units	Dilution Factor	Detection Limit	Code	Run Date
X00388-005		**SW846 8260A Purgeable VOCs by GC/MS**							
X00388	XG.2000.1100-5	75-34-3	1,1 Dichloroethene	111	% Recovery	1	NA		10/03/00
X00388	XG.2000.1100-5	106-46-7	1,4 Dichlorobenzene	98	% Recovery	1	NA		10/03/00
X00388	XG.2000.1100-5	71-43-2	Benzene	111	% Recovery	1	NA		10/03/00
X00388	XG.2000.1100-5	108-90-7	Chlorobenzene	109	% Recovery	1	NA		10/03/00
X00388	XG.2000.1100-5	108-88-3	Toluene	112	% Recovery	1	NA		10/03/00
X00388	XG.2000.1100-5	79-01-6	Trichloroethene	110	% Recovery	1	NA		10/03/00
X00400-003		**SW846 3510B/8270B SVOCs by GC/MS**							
X00400	XG.2000.1153-3	120-82-1	1,2,4-Trichlorobenzene	53	% Recovery	1	NA		10/16/00
X00400	XG.2000.1153-3	106-46-7	1,4-Dichlorobenzene	48	% Recovery	1	NA		10/16/00
[illegible]	XG.2000.1153-3	121-14-2	2,4-Dinitrotoluene	73	% Recovery	1	NA		10/16/00
[illegible]	XG.2000.1153-3	95-57-8	2-Chlorophenol	44	% Recovery	1	NA		10/16/00

Client: CH2MHILL

Project: 0010135 KAFB ST 106

Explanation of codes

D *Not applicable due to sample dilut*

L *Not applicable due to MDL proxim*

X00400	XG.2000.1153-3	59-50-7	4-Chloro-3-methylphenol	49	% Recovery	1	NA		10/16/00
X00400	XG.2000.1153-3	100-02-7	4-Nitrophenol	27	% Recovery	1	NA		10/16/00
X00400	XG.2000.1153-3	83-32-9	Acenaphthene	75	% Recovery	1	NA		10/16/00
X00400	XG.2000.1153-3	117-84-0	di-n-Octylpthalate	63	% Recovery	1	NA		10/16/00
X00400	XG.2000.1153-3	621-64-7	n-Nitroso-di-n-propylamine	72	% Recovery	1	NA		10/16/00
X00400	XG.2000.1153-3	87-86-5	Pentachlorophenol	61	% Recovery	1	NA		10/16/00
X00400	XG.2000.1153-3	108-95-2	Phenol	23	% Recovery	1	NA		10/16/00
X00400	XG.2000.1153-3	129-00-0	Pyrene	87	% Recovery	1	NA		10/16/00
X00404-003		**SW846 ME/8015A Diesel Range Organics by GC/FID**							
X00404	XG.2000.1139-19		Diesel Range Organics	109	% Recovery	1	NA		10/14/00
X00405-003		**SW846 5030A/8015A GRO by GC/FID**							
X00405	XG.2000.1141-12		Gasoline Range Organics	98	% Recovery	1	NA		10/16/00

QC Type **LCSD: Lab Control Spike Duplicate Precision** QC Matrix **WATER**

QC Group	Run Sequence	CAS #	Analyte	Result	Units	Dilution Factor	Detection Limit	Code	Run Date
X00388-005		**SW846 8260A Purgeable VOCs by GC/MS**							
X00388	XG.2000.1100-5	75-34-3	1,1 Dichloroethene	2	RPD	1	NA		10/03/00
X00388	XG.2000.1100-5	106-46-7	1,4 Dichlorobenzene	2	RPD	1	NA		10/03/00
X00388	XG.2000.1100-5	71-43-2	Benzene	< 1	RPD	1	NA		10/03/0
X00388	XG.2000.1100-5	108-90-7	Chlorobenzene	< 1	RPD	1	NA		10/03
X00388	XG.2000.1100-5	108-88-3	Toluene	< 1	RPD	1	NA		10/03/00
X00388	XG.2000.1100-5	79-01-6	Trichloroethene	< 1	RPD	1	NA		10/03/00
X00400-003		**SW846 3510B/8270B SVOCs by GC/MS**							
X00400	XG.2000.1153-3	120-82-1	1,2,4-Trichlorobenzene	2	RPD	1	NA		10/16/00
X00400	XG.2000.1153-3	106-46-7	1,4-Dichlorobenzene	5	RPD	1	NA		10/16/00
X00400	XG.2000.1153-3	121-14-2	2,4-Dinitrotoluene	3	RPD	1	NA		10/16/00
X00400	XG.2000.1153-3	95-57-8	2-Chlorophenol	14	RPD	1	NA		10/16/00
X00400	XG.2000.1153-3	59-50-7	4-Chloro-3-methylphenol	8	RPD	1	NA		10/16/00
X00400	XG.2000.1153-3	100-02-7	4-Nitrophenol	12	RPD	1	NA		10/16/00
X00400	XG.2000.1153-3	83-32-9	Acenaphthene	2	RPD	1	NA		10/16/00
X00400	XG.2000.1153-3	117-84-0	di-n-Octylpthalate	13	RPD	1	NA		10/16/00
X00400	XG.2000.1153-3	621-64-7	n-Nitroso-di-n-propylamine	< 1	RPD	1	NA		10/16/00
X00400	XG.2000.1153-3	87-86-5	Pentachlorophenol	20	RPD	1	NA		10/16/00
X00400	XG.2000.1153-3	108-95-2	Phenol	9	RPD	1	NA		10/16/00
X00400	XG.2000.1153-3	129-00-0	Pyrene	5	RPD	1	NA		10/16/00
X00404-003		**SW846 ME/8015A Diesel Range Organics by GC/FID**							
X00404	XG.2000.1139-19		Diesel Range Organics	< 1	RPD	1	NA		10/14/00
X00405-003		**SW846 5030A/8015A GRO by GC/FID**							
X00405	XG.2000.1141-12		Gasoline Range Organics	2	RPD	1	NA		10/16/00

Quality Control Summary

Client: CH2MHILL

Project: 0010135 KAFB ST 106

Explanation of codes

D	*Not applicable due to sample dilution*
L	*Not applicable due to MDL proximity*

QC Type: **MB: Method Blank** QC Matrix: **WATER**

QC Group	Run Sequence	CAS #	Analyte	Result	Units	Dilution Factor	Detection Limit	Code	Run Date
X00388-001		**SW846 8260A Purgeable VOCs by GC/MS**							
X00388	XG.2000.1100-1	75-34-3	1,1 Dichloroethane	ND	ug / L	1	1		10/03/00
X00388	XG.2000.1100-1	75-34-3	1,1 Dichloroethene	ND	ug / L	1	1		10/03/00
X00388	XG.2000.1100-1	71-55-6	1,1,1 Trichloroethane	ND	ug / L	1	1		10/03/00
X00388	XG.2000.1100-1	630-20-6	1,1,1,2 Tetrachloroethane	ND	ug / L	1	1		10/03/00
X00388	XG.2000.1100-1	79-00-5	1,1,2 Trichloroethane	ND	ug / L	1	1		10/03/00
X00388	XG.2000.1100-1	79-34-5	1,1,2,2 Tetrachloroethane	ND	ug / L	1	1		10/03/00
X00388	XG.2000.1100-1	106-93-4	1,2 Dibromoethane (EDB)	ND	ug / L	1	1		10/03/00
X00388	XG.2000.1100-1	95-50-1	1,2 Dichlorobenzene	ND	ug / L	1	1		10/03/00
X00388	XG.2000.1100-1	107-06-2	1,2 Dichloroethane	ND	ug / L	1	1		10/03/00
X00388	XG.2000.1100-1	78-87-5	1,2 Dichloropropane	ND	ug / L	1	1		10/03/00
X00388	XG.2000.1100-1	96-18-4	1,2,3 Trichloropropane	ND	ug / L	1	1		10/03/00
X00388	XG.2000.1100-1	95-63-6	1,2,4-Trimethylbenzene	ND	ug / L	1	1		10/03/00
X00388	XG.2000.1100-1	541-73-1	1,3 Dichlorobenzene	ND	ug / L	1	1		10/03/00
X00388	XG.2000.1100-1	108-67-8	1,3,5-Trimethylbenzene	ND	ug / L	1	1		10/03/00
X00388	XG.2000.1100-1	764-41-0	1,4 Dichloro-2-butene	ND	ug / L	1	10		10/03/00
X00388	XG.2000.1100-1	106-46-7	1,4 Dichlorobenzene	ND	ug / L	1	1		10/03/00
[illegible]38	XG.2000.1100-1	78-93-3	2-Butanone (MEK)	ND	ug / L	1	5		10/03/00
[illegible]88	XG.2000.1100-1	110-75-8	2-Chloroethylvinylether	ND	ug / L	1	5		10/03/00
X00388	XG.2000.1100-1	591-78-6	2-Hexanone (MBK)	ND	ug / L	1	5		10/03/00
X00388	XG.2000.1100-1	108-10-1	4-Methyl-2-pentanone (MIBK)	ND	ug / L	1	5		10/03/00
X00388	XG.2000.1100-1	67-64-1	Acetone	ND	ug / L	1	10		10/03/00
X00388	XG.2000.1100-1	107-02-8	Acrolein	ND	ug / L	1	20		10/03/00
X00388	XG.2000.1100-1	107-13-1	Acrylonitrile	ND	ug / L	1	20		10/03/00
X00388	XG.2000.1100-1	71-43-2	Benzene	ND	ug / L	1	1		10/03/00
X00388	XG.2000.1100-1	75-27-4	Bromodichloromethane	ND	ug / L	1	1		10/03/00
X00388	XG.2000.1100-1	75-25-2	Bromoform	ND	ug / L	1	1		10/03/00
X00388	XG.2000.1100-1	74-83-9	Bromomethane	ND	ug / L	1	5		10/03/00
X00388	XG.2000.1100-1	75-15-0	Carbon disulfide	ND	ug / L	1	5		10/03/00
X00388	XG.2000.1100-1	56-23-5	Carbon tetrachloride	ND	ug / L	1	1		10/03/00
X00388	XG.2000.1100-1	108-90-7	Chlorobenzene	ND	ug / L	1	1		10/03/00
X00388	XG.2000.1100-1	124-48-1	Chlorodibromomethane	ND	ug / L	1	1		10/03/00
X00388	XG.2000.1100-1	75-00-3	Chloroethane	ND	ug / L	1	5		10/03/00
X00388	XG.2000.1100-1	67-66-3	Chloroform	ND	ug / L	1	1		10/03/00
X00388	XG.2000.1100-1	74-87-3	Chloromethane	ND	ug / L	1	5		10/03/00
X00388	XG.2000.1100-1	156-59-2	cis-1,2 dichloroethene	ND	ug / L	1	1		10/03/00
X00388	XG.2000.1100-1	10061-01-5	cis-1,3 dichloropropene	ND	ug / L	1	1		10/03/00
X00388	XG.2000.1100-1	74-95-3	Dibromomethane	ND	ug / L	1	1		10/03/00
X00388	XG.2000.1100-1	97-63-2	Ethyl methacrylate	ND	ug / L	1	5		10/03/00
X00388	XG.2000.1100-1	100-41-4	Ethylbenzene	ND	ug / L	1	1		10/03/00
X00388	XG.2000.1100-1		Freon 113	ND	ug / L	1	5		10/03/00
X00388	XG.2000.1100-1	75-71-8	Freon 12	ND	ug / L	1	10		10/03/00
X00388	XG.2000.1100-1	74-88-4	Iodomethane	ND	ug / L	1	5		10/03/00
[illegible]8	XG.2000.1100-1	1634-04-4	Methyl t-butyl ether (MTBE)	ND	ug / L	1	1		10/03/00

Quality Control Summary

Client: CH2MHILL

Project: 0010135 KAFB ST 106

Explanation of codes

D *Not applicable due to sample dilut*

L *Not applicable due to MDL proxim*

X00388	XG.2000.1100-1	75-09-2	Methylene chloride	ND	ug / L	1	10	10/03/0
X00388	XG.2000.1100-1	91-20-3	Naphthalene	ND	ug / L	1	5	10/03/0
X00388	XG.2000.1100-1	95-47-6	o-Xylene	ND	ug / L	1	1	10/03/0
X00388	XG.2000.1100-1	108-38-3/106-42	p/m Xylenes	ND	ug / L	1	2	10/03/0
X00388	XG.2000.1100-1	100-42-5	Styrene	ND	ug / L	1	1	10/03/0
X00388	XG.2000.1100-1	156-60-5	t-1,2 Dichloroethene	ND	ug / L	1	1	10/03/0
X00388	XG.2000.1100-1	10061-02-6	t-1,3 Dichloropropene	ND	ug / L	1	1	10/03/0
X00388	XG.2000.1100-1	127-18-4	Tetrachloroethene	ND	ug / L	1	1	10/03/0
X00388	XG.2000.1100-1	108-88-3	Toluene	ND	ug / L	1	1	10/03/0
X00388	XG.2000.1100-1	79-01-6	Trichloroethene	ND	ug / L	1	1	10/03/0
X00388	XG.2000.1100-1	75-69-4	Trichlorofluoromethane	ND	ug / L	1	5	10/03/0
X00388	XG.2000.1100-1	108-05-4	Vinyl acetate	ND	ug / L	1	5	10/03/0
X00388	XG.2000.1100-1	75-01-4	Vinyl chloride	ND	ug / L	1	5	10/03/0
X00388-006		**SW846 8260A Purgeable VOCs by GC/MS**						
X00388	XG.2000.1100-6	75-34-3	1,1 Dichloroethane	ND	ug / L	1	1	10/04/0
X00388	XG.2000.1100-6	75-34-3	1,1 Dichloroethene	ND	ug / L	1	1	10/04/0
X00388	XG.2000.1100-6	71-55-6	1,1,1 Trichloroethane	ND	ug / L	1	1	10/04/0
X00388	XG.2000.1100-6	630-20-6	1,1,1,2 Tetrachloroethane	ND	ug / L	1	1	10/04/0
X00388	XG.2000.1100-6	79-00-5	1,1,2 Trichloroethane	ND	ug / L	1	1	10/04/0
X00388	XG.2000.1100-6	79-34-5	1,1,2,2 Tetrachloroethane	ND	ug / L	1	1	10/04/0
X00388	XG.2000.1100-6	106-93-4	1,2 Dibromoethane (EDB)	ND	ug / L	1	1	10/04/0
X00388	XG.2000.1100-6	95-50-1	1,2 Dichlorobenzene	ND	ug / L	1	1	10/04/0
X00388	XG.2000.1100-6	107-06-2	1,2 Dichloroethane	ND	ug / L	1	1	10/04
X00388	XG.2000.1100-6	78-87-5	1,2 Dichloropropane	ND	ug / L	1	1	10/04
X00388	XG.2000.1100-6	96-18-4	1,2,3 Trichloropropane	ND	ug / L	1	1	10/04/0
X00388	XG.2000.1100-6	95-63-6	1,2,4-Trimethylbenzene	ND	ug / L	1	1	10/04/0
X00388	XG.2000.1100-6	541-73-1	1,3 Dichlorobenzene	ND	ug / L	1	1	10/04/0
X00388	XG.2000.1100-6	108-67-8	1,3,5-Trimethylbenzene	ND	ug / L	1	1	10/04/0
X00388	XG.2000.1100-6	764-41-0	1,4 Dichloro-2-butene	ND	ug / L	1	10	10/04/0
X00388	XG.2000.1100-6	106-46-7	1,4 Dichlorobenzene	ND	ug / L	1	1	10/04/0
X00388	XG.2000.1100-6	78-93-3	2-Butanone (MEK)	ND	ug / L	1	5	10/04/0
X00388	XG.2000.1100-6	110-75-8	2-Chloroethylvinylether	ND	ug / L	1	5	10/04/0
X00388	XG.2000.1100-6	591-78-6	2-Hexanone (MBK)	ND	ug / L	1	5	10/04/0
X00388	XG.2000.1100-6	108-10-1	4-Methyl-2-pentanone (MIBK)	ND	ug / L	1	5	10/04/0
X00388	XG.2000.1100-6	67-64-1	Acetone	ND	ug / L	1	10	10/04/0
X00388	XG.2000.1100-6	107-02-8	Acrolein	ND	ug / L	1	20	10/04/0
X00388	XG.2000.1100-6	107-13-1	Acrylonitrile	ND	ug / L	1	20	10/04/0
X00388	XG.2000.1100-6	71-43-2	Benzene	ND	ug / L	1	1	10/04/0
X00388	XG.2000.1100-6	75-27-4	Bromodichloromethane	ND	ug / L	1	1	10/04/0
X00388	XG.2000.1100-6	75-25-2	Bromoform	ND	ug / L	1	1	10/04/0
X00388	XG.2000.1100-6	74-83-9	Bromomethane	ND	ug / L	1	5	10/04/0
X00388	XG.2000.1100-6	75-15-0	Carbon disulfide	ND	ug / L	1	5	10/04/0
X00388	XG.2000.1100-6	56-23-5	Carbon tetrachloride	ND	ug / L	1	1	10/04/0
X00388	XG.2000.1100-6	108-90-7	Chlorobenzene	ND	ug / L	1	1	10/04/0
X00388	XG.2000.1100-6	124-48-1	Chlorodibromomethane	ND	ug / L	1	1	10/04/0
X00388	XG.2000.1100-6	75-00-3	Chloroethane	ND	ug / L	1	5	10/04/0
X00388	XG.2000.1100-6	67-66-3	Chloroform	ND	ug / L	1	1	10/04/0
X00388	XG.2000.1100-6	74-87-3	Chloromethane	ND	ug / L	1	5	10/04/0
X00388	XG.2000.1100-6	156-59-2	cis-1,2 dichloroethene	ND	ug / L	1	1	10/04

Quality Control Summary

Explanation of codes

D *Not applicable due to sample dilution*
L *Not applicable due to MDL proximity*

Client: **CH2MHILL**
Project: **0010135 KAFB ST 106**

X00388	XG.2000.1100-6	10061-01-5	cis-1,3 dichloropropene	ND	ug / L	1	1		10/04/00
X00388	XG.2000.1100-6	74-95-3	Dibromomethane	ND	ug / L	1	1		10/04/00
X00388	XG.2000.1100-6	97-63-2	Ethyl methacrylate	ND	ug / L	1	5		10/04/00
X00388	XG.2000.1100-6	100-41-4	Ethylbenzene	ND	ug / L	1	1		10/04/00
X00388	XG.2000.1100-6		Freon 113	ND	ug / L	1	5		10/04/00
X00388	XG.2000.1100-6	75-71-8	Freon 12	ND	ug / L	1	10		10/04/00
X00388	XG.2000.1100-6	74-88-4	Iodomethane	ND	ug / L	1	5		10/04/00
X00388	XG.2000.1100-6	1634-04-4	Methyl t-butyl ether (MTBE)	ND	ug / L	1	1		10/04/00
X00388	XG.2000.1100-6	75-09-2	Methylene chloride	ND	ug / L	1	10		10/04/00
X00388	XG.2000.1100-6	91-20-3	Naphthalene	ND	ug / L	1	5		10/04/00
X00388	XG.2000.1100-6	95-47-6	o-Xylene	ND	ug / L	1	1		10/04/00
X00388	XG.2000.1100-6	108-38-3/106-42	p/m Xylenes	ND	ug / L	1	2		10/04/00
X00388	XG.2000.1100-6	100-42-5	Styrene	ND	ug / L	1	1		10/04/00
X00388	XG.2000.1100-6	156-60-5	t-1,2 Dichloroethene	ND	ug / L	1	1		10/04/00
X00388	XG.2000.1100-6	10061-02-6	t-1,3 Dichloropropene	ND	ug / L	1	1		10/04/00
X00388	XG.2000.1100-6	127-18-4	Tetrachloroethene	ND	ug / L	1	1		10/04/00
X00388	XG.2000.1100-6	108-88-3	Toluene	ND	ug / L	1	1		10/04/00
X00388	XG.2000.1100-6	79-01-6	Trichloroethene	ND	ug / L	1	1		10/04/00
X00388	XG.2000.1100-6	75-69-4	Trichlorofluoromethane	ND	ug / L	1	5		10/04/00
X00388	XG.2000.1100-6	108-05-4	Vinyl acetate	ND	ug / L	1	5		10/04/00
X00388	XG.2000.1100-6	75-01-4	Vinyl chloride	ND	ug / L	1	5		10/04/00

X00388-013 **SW846 8260A Purgeable VOCs by GC/MS**

38	XG.2000.1160-1	75-34-3	1,1 Dichloroethane	ND	ug / L	1	1		10/11/00
X00388	XG.2000.1160-1	75-34-3	1,1 Dichloroethene	ND	ug / L	1	1		10/11/00
X00388	XG.2000.1160-1	71-55-6	1,1,1 Trichloroethane	ND	ug / L	1	1		10/11/00
X00388	XG.2000.1160-1	630-20-6	1,1,1,2 Tetrachloroethane	ND	ug / L	1	1		10/11/00
X00388	XG.2000.1160-1	79-00-5	1,1,2 Trichloroethane	ND	ug / L	1	1		10/11/00
X00388	XG.2000.1160-1	79-34-5	1,1,2,2 Tetrachloroethane	ND	ug / L	1	1		10/11/00
X00388	XG.2000.1160-1	106-93-4	1,2 Dibromoethane (EDB)	ND	ug / L	1	1		10/11/00
X00388	XG.2000.1160-1	95-50-1	1,2 Dichlorobenzene	ND	ug / L	1	1		10/11/00
X00388	XG.2000.1160-1	107-06-2	1,2 Dichloroethane	ND	ug / L	1	1		10/11/00
X00388	XG.2000.1160-1	78-87-5	1,2 Dichloropropane	ND	ug / L	1	1		10/11/00
X00388	XG.2000.1160-1	96-18-4	1,2,3 Trichloropropane	ND	ug / L	1	1		10/11/00
X00388	XG.2000.1160-1	95-63-6	1,2,4-Trimethylbenzene	ND	ug / L	1	1		10/11/00
X00388	XG.2000.1160-1	541-73-1	1,3 Dichlorobenzene	ND	ug / L	1	1		10/11/00
X00388	XG.2000.1160-1	108-67-8	1,3,5-Trimethylbenzene	ND	ug / L	1	1		10/11/00
X00388	XG.2000.1160-1	764-41-0	1,4 Dichloro-2-butene	ND	ug / L	1	10		10/11/00
X00388	XG.2000.1160-1	106-46-7	1,4 Dichlorobenzene	ND	ug / L	1	1		10/11/00
X00388	XG.2000.1160-1	78-93-3	2-Butanone (MEK)	ND	ug / L	1	5		10/11/00
X00388	XG.2000.1160-1	110-75-8	2-Chloroethylvinylether	ND	ug / L	1	5		10/11/00
X00388	XG.2000.1160-1	591-78-6	2-Hexanone (MBK)	ND	ug / L	1	5		10/11/00
X00388	XG.2000.1160-1	108-10-1	4-Methyl-2-pentanone (MIBK)	ND	ug / L	1	5		10/11/00
X00388	XG.2000.1160-1	67-64-1	Acetone	ND	ug / L	1	10		10/11/00
X00388	XG.2000.1160-1	107-02-8	Acrolein	ND	ug / L	1	20		10/11/00
X00388	XG.2000.1160-1	107-13-1	Acrylonitrile	ND	ug / L	1	20		10/11/00
X00388	XG.2000.1160-1	71-43-2	Benzene	ND	ug / L	1	1		10/11/00
X00388	XG.2000.1160-1	75-27-4	Bromodichloromethane	ND	ug / L	1	1		10/11/00
X00388	XG.2000.1160-1	75-25-2	Bromoform	ND	ug / L	1	1		10/11/00
38	XG.2000.1160-1	74-83-9	Bromomethane	ND	ug / L	1	5		10/11/00

Quality Control Summary

Client: CH2MHILL

Project: 0010135 KAFB ST 106

Explanation of codes

D *Not applicable due to sample diluti*

L *Not applicable due to MDL proximi*

X00388	XG.2000.1160-1	75-15-0	Carbon disulfide	ND	ug / L	1	5		10/11/00
X00388	XG.2000.1160-1	56-23-5	Carbon tetrachloride	ND	ug / L	1	1		10/11/00
X00388	XG.2000.1160-1	108-90-7	Chlorobenzene	ND	ug / L	1	1		10/11/00
X00388	XG.2000.1160-1	124-48-1	Chlorodibromomethane	ND	ug / L	1	1		10/11/00
X00388	XG.2000.1160-1	75-00-3	Chloroethane	ND	ug / L	1	5		10/11/00
X00388	XG.2000.1160-1	67-66-3	Chloroform	ND	ug / L	1	1		10/11/00
X00388	XG.2000.1160-1	74-87-3	Chloromethane	ND	ug / L	1	5		10/11/00
X00388	XG.2000.1160-1	156-59-2	cis-1,2 dichloroethene	ND	ug / L	1	1		10/11/00
X00388	XG.2000.1160-1	10061-01-5	cis-1,3 dichloropropene	ND	ug / L	1	1		10/11/00
X00388	XG.2000.1160-1	74-95-3	Dibromomethane	ND	ug / L	1	1		10/11/00
X00388	XG.2000.1160-1	97-63-2	Ethyl methacrylate	ND	ug / L	1	5		10/11/00
X00388	XG.2000.1160-1	100-41-4	Ethylbenzene	ND	ug / L	1	1		10/11/00
X00388	XG.2000.1160-1		Freon 113	ND	ug / L	1	5		10/11/00
X00388	XG.2000.1160-1	75-71-8	Freon 12	ND	ug / L	1	10		10/11/00
X00388	XG.2000.1160-1	74-88-4	Iodomethane	ND	ug / L	1	5		10/11/00
X00388	XG.2000.1160-1	1634-04-4	Methyl t-butyl ether (MTBE)	ND	ug / L	1	1		10/11/00
X00388	XG.2000.1160-1	75-09-2	Methylene chloride	ND	ug / L	1	10		10/11/00
X00388	XG.2000.1160-1	91-20-3	Naphthalene	ND	ug / L	1	5		10/11/00
X00388	XG.2000.1160-1	95-47-6	o-Xylene	ND	ug / L	1	1		10/11/00
X00388	XG.2000.1160-1	108-38-3/106-42	p/m Xylenes	ND	ug / L	1	2		10/11/00
X00388	XG.2000.1160-1	100-42-5	Styrene	ND	ug / L	1	1		10/11/00
X00388	XG.2000.1160-1	156-60-5	t-1,2 Dichloroethene	ND	ug / L	1	1		10/11/00
X00388	XG.2000.1160-1	10061-02-6	t-1,3 Dichloropropene	ND	ug / L	1	1		10/11/0
X00388	XG.2000.1160-1	127-18-4	Tetrachloroethene	ND	ug / L	1	1		10/11
X00388	XG.2000.1160-1	108-88-3	Toluene	ND	ug / L	1	1		10/11/00
X00388	XG.2000.1160-1	79-01-6	Trichloroethene	ND	ug / L	1	1		10/11/0
X00388	XG.2000.1160-1	75-69-4	Trichlorofluoromethane	ND	ug / L	1	5		10/11/0
X00388	XG.2000.1160-1	108-05-4	Vinyl acetate	ND	ug / L	1	5		10/11/0
X00388	XG.2000.1160-1	75-01-4	Vinyl chloride	ND	ug / L	1	5		10/11/0
X00388-016		**SW846 8260A Purgeable VOCs by GC/MS**							
X00388	XG.2000.1160-3	75-34-3	1,1 Dichloroethane	ND	ug / L	1	1		10/12/0
X00388	XG.2000.1160-3	75-34-3	1,1 Dichloroethene	ND	ug / L	1	1		10/12/0
X00388	XG.2000.1160-3	71-55-6	1,1,1 Trichloroethane	ND	ug / L	1	1		10/12/0
X00388	XG.2000.1160-3	630-20-6	1,1,1,2 Tetrachloroethane	ND	ug / L	1	1		10/12/0
X00388	XG.2000.1160-3	79-00-5	1,1,2 Trichloroethane	ND	ug / L	1	1		10/12/0
X00388	XG.2000.1160-3	79-34-5	1,1,2,2 Tetrachloroethane	ND	ug / L	1	1		10/12/0
X00388	XG.2000.1160-3	106-93-4	1,2 Dibromoethane (EDB)	ND	ug / L	1	1		10/12/0
X00388	XG.2000.1160-3	95-50-1	1,2 Dichlorobenzene	ND	ug / L	1	1		10/12/0
X00388	XG.2000.1160-3	107-06-2	1,2 Dichloroethane	ND	ug / L	1	1		10/12/0
X00388	XG.2000.1160-3	78-87-5	1,2 Dichloropropane	ND	ug / L	1	1		10/12/0
X00388	XG.2000.1160-3	96-18-4	1,2,3 Trichloropropane	ND	ug / L	1	1		10/12/0
X00388	XG.2000.1160-3	95-63-6	1,2,4-Trimethylbenzene	ND	ug / L	1	1		10/12/0
X00388	XG.2000.1160-3	541-73-1	1,3 Dichlorobenzene	ND	ug / L	1	1		10/12/0
X00388	XG.2000.1160-3	108-67-8	1,3,5-Trimethylbenzene	ND	ug / L	1	1		10/12/0
X00388	XG.2000.1160-3	764-41-0	1,4 Dichloro-2-butene	ND	ug / L	1	10		10/12/0
X00388	XG.2000.1160-3	106-46-7	1,4 Dichlorobenzene	ND	ug / L	1	1		10/12/0
X00388	XG.2000.1160-3	78-93-3	2-Butanone (MEK)	ND	ug / L	1	5		10/12/0
X00388	XG.2000.1160-3	110-75-8	2-Chloroethylvinylether	ND	ug / L	1	5		10/12/0
X00388	XG.2000.1160-3	591-78-6	2-Hexanone (MBK)	ND	ug / L	1	5		10/12

Quality Control Summary

Explanation of codes

D	*Not applicable due to sample dilution*
L	*Not applicable due to MDL proximity*

Client: **CH2MHILL**

Project: **0010135 KAFB ST 106**

X00388	XG.2000.1160-3	108-10-1	4-Methyl-2-pentanone (MIBK)	ND	ug / L	1	5	10/12/00
X00388	XG.2000.1160-3	67-64-1	Acetone	ND	ug / L	1	10	10/12/00
X00388	XG.2000.1160-3	107-02-8	Acrolein	ND	ug / L	1	20	10/12/00
X00388	XG.2000.1160-3	107-13-1	Acrylonitrile	ND	ug / L	1	20	10/12/00
X00388	XG.2000.1160-3	71-43-2	Benzene	ND	ug / L	1	1	10/12/00
X00388	XG.2000.1160-3	75-27-4	Bromodichloromethane	ND	ug / L	1	1	10/12/00
X00388	XG.2000.1160-3	75-25-2	Bromoform	ND	ug / L	1	1	10/12/00
X00388	XG.2000.1160-3	74-83-9	Bromomethane	ND	ug / L	1	5	10/12/00
X00388	XG.2000.1160-3	75-15-0	Carbon disulfide	ND	ug / L	1	5	10/12/00
X00388	XG.2000.1160-3	56-23-5	Carbon tetrachloride	ND	ug / L	1	1	10/12/00
X00388	XG.2000.1160-3	108-90-7	Chlorobenzene	ND	ug / L	1	1	10/12/00
X00388	XG.2000.1160-3	124-48-1	Chlorodibromomethane	ND	ug / L	1	1	10/12/00
X00388	XG.2000.1160-3	75-00-3	Chloroethane	ND	ug / L	1	5	10/12/00
X00388	XG.2000.1160-3	67-66-3	Chloroform	ND	ug / L	1	1	10/12/00
X00388	XG.2000.1160-3	74-87-3	Chloromethane	ND	ug / L	1	5	10/12/00
X00388	XG.2000.1160-3	156-59-2	cis-1,2 dichloroethene	ND	ug / L	1	1	10/12/00
X00388	XG.2000.1160-3	10061-01-5	cis-1,3 dichloropropene	ND	ug / L	1	1	10/12/00
X00388	XG.2000.1160-3	74-95-3	Dibromomethane	ND	ug / L	1	1	10/12/00
X00388	XG.2000.1160-3	97-63-2	Ethyl methacrylate	ND	ug / L	1	5	10/12/00
X00388	XG.2000.1160-3	100-41-4	Ethylbenzene	ND	ug / L	1	1	10/12/00
X00388	XG.2000.1160-3		Freon 113	ND	ug / L	1	5	10/12/00
X00388	XG.2000.1160-3	75-71-8	Freon 12	ND	ug / L	1	10	10/12/00
X00388	XG.2000.1160-3	74-88-4	Iodomethane	ND	ug / L	1	5	10/12/00
[illegible]3	XG.2000.1160-3	1634-04-4	Methyl t-butyl ether (MTBE)	ND	ug / L	1	1	10/12/00
[illegible]8	XG.2000.1160-3	75-09-2	Methylene chloride	ND	ug / L	1	10	10/12/00
X00388	XG.2000.1160-3	91-20-3	Naphthalene	ND	ug / L	1	5	10/12/00
X00388	XG.2000.1160-3	95-47-6	o-Xylene	ND	ug / L	1	1	10/12/00
X00388	XG.2000.1160-3	108-38-3/106-42	p/m Xylenes	ND	ug / L	1	2	10/12/00
X00388	XG.2000.1160-3	100-42-5	Styrene	ND	ug / L	1	1	10/12/00
X00388	XG.2000.1160-3	156-60-5	t-1,2 Dichloroethene	ND	ug / L	1	1	10/12/00
X00388	XG.2000.1160-3	10061-02-6	t-1,3 Dichloropropene	ND	ug / L	1	1	10/12/00
X00388	XG.2000.1160-3	127-18-4	Tetrachloroethene	ND	ug / L	1	1	10/12/00
X00388	XG.2000.1160-3	108-88-3	Toluene	ND	ug / L	1	1	10/12/00
X00388	XG.2000.1160-3	79-01-6	Trichloroethene	ND	ug / L	1	1	10/12/00
X00388	XG.2000.1160-3	75-69-4	Trichlorofluoromethane	ND	ug / L	1	5	10/12/00
X00388	XG.2000.1160-3	108-05-4	Vinyl acetate	ND	ug / L	1	5	10/12/00
X00388	XG.2000.1160-3	75-01-4	Vinyl chloride	ND	ug / L	1	5	10/12/00
X00388-030		**SW846 8260A Purgeable VOCs by GC/MS**						
X00388	XG.2000.1160-13	75-34-3	1,1 Dichloroethane	ND	ug / L	1	1	10/13/00
X00388	XG.2000.1160-13	75-34-3	1,1 Dichloroethene	ND	ug / L	1	1	10/13/00
X00388	XG.2000.1160-13	71-55-6	1,1,1 Trichloroethane	ND	ug / L	1	1	10/13/00
X00388	XG.2000.1160-13	630-20-6	1,1,1,2 Tetrachloroethane	ND	ug / L	1	1	10/13/00
X00388	XG.2000.1160-13	79-00-5	1,1,2 Trichloroethane	ND	ug / L	1	1	10/13/00
X00388	XG.2000.1160-13	79-34-5	1,1,2,2 Tetrachloroethane	ND	ug / L	1	1	10/13/00
X00388	XG.2000.1160-13	106-93-4	1,2 Dibromoethane (EDB)	ND	ug / L	1	1	10/13/00
X00388	XG.2000.1160-13	95-50-1	1,2 Dichlorobenzene	ND	ug / L	1	1	10/13/00
X00388	XG.2000.1160-13	107-06-2	1,2 Dichloroethane	ND	ug / L	1	1	10/13/00
X00388	XG.2000.1160-13	78-87-5	1,2 Dichloropropane	ND	ug / L	1	1	10/13/00
[illegible]8	XG.2000.1160-13	96-18-4	1,2,3 Trichloropropane	ND	ug / L	1	1	10/13/00

Quality Control Summary

Client: CH2MHILL

Project: 0010135 KAFB ST 106

Explanation of codes

D *Not applicable due to sample dil*

L *Not applicable due to MDL proxim*

X00388	XG.2000.1160-13	95-63-6	1,2,4-Trimethylbenzene	ND	ug / L	1	1	10/13/00
X00388	XG.2000.1160-13	541-73-1	1,3 Dichlorobenzene	ND	ug / L	1	1	10/13/00
X00388	XG.2000.1160-13	108-67-8	1,3,5-Trimethylbenzene	ND	ug / L	1	1	10/13/00
X00388	XG.2000.1160-13	764-41-0	1,4 Dichloro-2-butene	ND	ug / L	1	10	10/13/00
X00388	XG.2000.1160-13	106-46-7	1,4 Dichlorobenzene	ND	ug / L	1	1	10/13/00
X00388	XG.2000.1160-13	78-93-3	2-Butanone (MEK)	ND	ug / L	1	5	10/13/00
X00388	XG.2000.1160-13	110-75-8	2-Chloroethylvinylether	ND	ug / L	1	5	10/13/00
X00388	XG.2000.1160-13	591-78-6	2-Hexanone (MBK)	ND	ug / L	1	5	10/13/00
X00388	XG.2000.1160-13	108-10-1	4-Methyl-2-pentanone (MIBK)	ND	ug / L	1	5	10/13/00
X00388	XG.2000.1160-13	67-64-1	Acetone	ND	ug / L	1	10	10/13/00
X00388	XG.2000.1160-13	107-02-8	Acrolein	ND	ug / L	1	20	10/13/00
X00388	XG.2000.1160-13	107-13-1	Acrylonitrile	ND	ug / L	1	20	10/13/00
X00388	XG.2000.1160-13	71-43-2	Benzene	ND	ug / L	1	1	10/13/00
X00388	XG.2000.1160-13	75-27-4	Bromodichloromethane	ND	ug / L	1	1	10/13/00
X00388	XG.2000.1160-13	75-25-2	Bromoform	ND	ug / L	1	1	10/13/00
X00388	XG.2000.1160-13	74-83-9	Bromomethane	ND	ug / L	1	5	10/13/00
X00388	XG.2000.1160-13	75-15-0	Carbon disulfide	ND	ug / L	1	5	10/13/00
X00388	XG.2000.1160-13	56-23-5	Carbon tetrachloride	ND	ug / L	1	1	10/13/00
X00388	XG.2000.1160-13	108-90-7	Chlorobenzene	ND	ug / L	1	1	10/13/00
X00388	XG.2000.1160-13	124-48-1	Chlorodibromomethane	ND	ug / L	1	1	10/13/00
X00388	XG.2000.1160-13	75-00-3	Chloroethane	ND	ug / L	1	5	10/13/00
X00388	XG.2000.1160-13	67-66-3	Chloroform	ND	ug / L	1	1	10/13/00
X00388	XG.2000.1160-13	74-87-3	Chloromethane	ND	ug / L	1	5	10/13/00
X00388	XG.2000.1160-13	156-59-2	cis-1,2 dichloroethene	ND	ug / L	1	1	10/1
X00388	XG.2000.1160-13	10061-01-5	cis-1,3 dichloropropene	ND	ug / L	1	1	10/1
X00388	XG.2000.1160-13	74-95-3	Dibromomethane	ND	ug / L	1	1	10/13/00
X00388	XG.2000.1160-13	97-63-2	Ethyl methacrylate	ND	ug / L	1	5	10/13/00
X00388	XG.2000.1160-13	100-41-4	Ethylbenzene	ND	ug / L	1	1	10/13/00
X00388	XG.2000.1160-13		Freon 113	ND	ug / L	1	5	10/13/00
X00388	XG.2000.1160-13	75-71-8	Freon 12	ND	ug / L	1	10	10/13/00
X00388	XG.2000.1160-13	74-88-4	Iodomethane	ND	ug / L	1	5	10/13/00
X00388	XG.2000.1160-13	1634-04-4	Methyl t-butyl ether (MTBE)	ND	ug / L	1	1	10/13/00
X00388	XG.2000.1160-13	75-09-2	Methylene chloride	ND	ug / L	1	10	10/13/00
X00388	XG.2000.1160-13	91-20-3	Naphthalene	ND	ug / L	1	5	10/13/00
X00388	XG.2000.1160-13	95-47-6	o-Xylene	ND	ug / L	1	1	10/13/00
X00388	XG.2000.1160-13	108-38-3/106-42	p/m Xylenes	ND	ug / L	1	2	10/13/00
X00388	XG.2000.1160-13	100-42-5	Styrene	ND	ug / L	1	1	10/13/00
X00388	XG.2000.1160-13	156-60-5	t-1,2 Dichloroethene	ND	ug / L	1	1	10/13/00
X00388	XG.2000.1160-13	10061-02-6	t-1,3 Dichloropropene	ND	ug / L	1	1	10/13/00
X00388	XG.2000.1160-13	127-18-4	Tetrachloroethene	ND	ug / L	1	1	10/13/00
X00388	XG.2000.1160-13	108-88-3	Toluene	ND	ug / L	1	1	10/13/00
X00388	XG.2000.1160-13	79-01-6	Trichloroethene	ND	ug / L	1	1	10/13/00
X00388	XG.2000.1160-13	75-69-4	Trichlorofluoromethane	ND	ug / L	1	5	10/13/00
X00388	XG.2000.1160-13	108-05-4	Vinyl acetate	ND	ug / L	1	5	10/13/00
X00388	XG.2000.1160-13	75-01-4	Vinyl chloride	ND	ug / L	1	5	10/13/00
X00388-033		**SW846 8260A Purgeable VOCs by GC/MS**						
X00388	XG.2000.1160-14	75-34-3	1,1 Dichloroethane	ND	ug / L	1	1	10/18/00
X00388	XG.2000.1160-14	75-34-3	1,1 Dichloroethene	ND	ug / L	1	1	10/18/00
X00388	XG.2000.1160-14	71-55-6	1,1,1 Trichloroethane	ND	ug / L	1	1	10/1

Quality Control Summary

Explanation of codes

D *Not applicable due to sample dilution*
L *Not applicable due to MDL proximity*

C[illegible]t: **CH2MHILL**
P[illegible]ect: **0010135 KAFB ST 106**

X00388	XG.2000.1160-14	630-20-6	1,1,1,2 Tetrachloroethane	ND	ug / L	1	1		10/18/00
X00388	XG.2000.1160-14	79-00-5	1,1,2 Trichloroethane	ND	ug / L	1	1		10/18/00
X00388	XG.2000.1160-14	79-34-5	1,1,2,2 Tetrachloroethane	ND	ug / L	1	1		10/18/00
X00388	XG.2000.1160-14	106-93-4	1,2 Dibromoethane (EDB)	ND	ug / L	1	1		10/18/00
X00388	XG.2000.1160-14	95-50-1	1,2 Dichlorobenzene	ND	ug / L	1	1		10/18/00
X00388	XG.2000.1160-14	107-06-2	1,2 Dichloroethane	ND	ug / L	1	1		10/18/00
X00388	XG.2000.1160-14	78-87-5	1,2 Dichloropropane	ND	ug / L	1	1		10/18/00
X00388	XG.2000.1160-14	96-18-4	1,2,3 Trichloropropane	ND	ug / L	1	1		10/18/00
X00388	XG.2000.1160-14	95-63-6	1,2,4-Trimethylbenzene	ND	ug / L	1	1		10/18/00
X00388	XG.2000.1160-14	541-73-1	1,3 Dichlorobenzene	ND	ug / L	1	1		10/18/00
X00388	XG.2000.1160-14	108-67-8	1,3,5-Trimethylbenzene	ND	ug / L	1	1		10/18/00
X00388	XG.2000.1160-14	764-41-0	1,4 Dichloro-2-butene	ND	ug / L	1	10		10/18/00
X00388	XG.2000.1160-14	106-46-7	1,4 Dichlorobenzene	ND	ug / L	1	1		10/18/00
X00388	XG.2000.1160-14	78-93-3	2-Butanone (MEK)	ND	ug / L	1	5		10/18/00
X00388	XG.2000.1160-14	110-75-8	2-Chloroethylvinylether	ND	ug / L	1	5		10/18/00
X00388	XG.2000.1160-14	591-78-6	2-Hexanone (MBK)	ND	ug / L	1	5		10/18/00
X00388	XG.2000.1160-14	108-10-1	4-Methyl-2-pentanone (MIBK)	ND	ug / L	1	5		10/18/00
X00388	XG.2000.1160-14	67-64-1	Acetone	ND	ug / L	1	10		10/18/00
X00388	XG.2000.1160-14	107-02-8	Acrolein	ND	ug / L	1	20		10/18/00
X00388	XG.2000.1160-14	107-13-1	Acrylonitrile	ND	ug / L	1	20		10/18/00
X00388	XG.2000.1160-14	71-43-2	Benzene	ND	ug / L	1	1		10/18/00
X00388	XG.2000.1160-14	75-27-4	Bromodichloromethane	ND	ug / L	1	1		10/18/00
X00388	XG.2000.1160-14	75-25-2	Bromoform	ND	ug / L	1	1		10/18/00
[illegible]3	XG.2000.1160-14	74-83-9	Bromomethane	ND	ug / L	1	5		10/18/00
[illegible]8	XG.2000.1160-14	75-15-0	Carbon disulfide	ND	ug / L	1	5		10/18/00
X00388	XG.2000.1160-14	56-23-5	Carbon tetrachloride	ND	ug / L	1	1		10/18/00
X00388	XG.2000.1160-14	108-90-7	Chlorobenzene	ND	ug / L	1	1		10/18/00
X00388	XG.2000.1160-14	124-48-1	Chlorodibromomethane	ND	ug / L	1	1		10/18/00
X00388	XG.2000.1160-14	75-00-3	Chloroethane	ND	ug / L	1	5		10/18/00
X00388	XG.2000.1160-14	67-66-3	Chloroform	ND	ug / L	1	1		10/18/00
X00388	XG.2000.1160-14	74-87-3	Chloromethane	ND	ug / L	1	5		10/18/00
X00388	XG.2000.1160-14	156-59-2	cis-1,2 dichloroethene	ND	ug / L	1	1		10/18/00
X00388	XG.2000.1160-14	10061-01-5	cis-1,3 dichloropropene	ND	ug / L	1	1		10/18/00
X00388	XG.2000.1160-14	74-95-3	Dibromomethane	ND	ug / L	1	1		10/18/00
X00388	XG.2000.1160-14	97-63-2	Ethyl methacrylate	ND	ug / L	1	5		10/18/00
X00388	XG.2000.1160-14	100-41-4	Ethylbenzene	ND	ug / L	1	1		10/18/00
X00388	XG.2000.1160-14		Freon 113	ND	ug / L	1	5		10/18/00
X00388	XG.2000.1160-14	75-71-8	Freon 12	ND	ug / L	1	10		10/18/00
X00388	XG.2000.1160-14	74-88-4	Iodomethane	ND	ug / L	1	5		10/18/00
X00388	XG.2000.1160-14	1634-04-4	Methyl t-butyl ether (MTBE)	ND	ug / L	1	1		10/18/00
X00388	XG.2000.1160-14	75-09-2	Methylene chloride	ND	ug / L	1	10		10/18/00
X00388	XG.2000.1160-14	91-20-3	Naphthalene	ND	ug / L	1	5		10/18/00
X00388	XG.2000.1160-14	95-47-6	o-Xylene	ND	ug / L	1	1		10/18/00
X00388	XG.2000.1160-14	108-38-3/106-42	p/m Xylenes	ND	ug / L	1	2		10/18/00
X00388	XG.2000.1160-14	100-42-5	Styrene	ND	ug / L	1	1		10/18/00
X00388	XG.2000.1160-14	156-60-5	t-1,2 Dichloroethene	ND	ug / L	1	1		10/18/00
X00388	XG.2000.1160-14	10061-02-6	t-1,3 Dichloropropene	ND	ug / L	1	1		10/18/00
X00388	XG.2000.1160-14	127-18-4	Tetrachloroethene	ND	ug / L	1	1		10/18/00
[illegible]8	XG.2000.1160-14	108-88-3	Toluene	ND	ug / L	1	1		10/18/00
[illegible]88	XG.2000.1160-14	79-01-6	Trichloroethene	ND	ug / L	1	1		10/18/00

Quality Control Summary

Client: CH2MHILL

Project: 0010135 KAFB ST 106

Explanation of codes

D Not applicable due to sample dilu

L Not applicable due to MDL proximi

X00388	XG.2000.1160-14	75-69-4	Trichlorofluoromethane	ND	ug / L	1	5	10/18/00
X00388	XG.2000.1160-14	108-05-4	Vinyl acetate	ND	ug / L	1	5	10/18/00
X00388	XG.2000.1160-14	75-01-4	Vinyl chloride	ND	ug / L	1	5	10/18/00
X00400-001		**SW846 3510B/8270B SVOCs by GC/MS**						
X00400	XG.2000.1153-1	120-82-1	1,2,4-Trichlorobenzene	ND	ug / L	1	1	10/16/00
X00400	XG.2000.1153-1	95-50-1	1,2-Dichlorobenzene	ND	ug / L	1	1	10/16/00
X00400	XG.2000.1153-1	541-73-1	1,3-Dichlorobenzene	ND	ug / L	1	1	10/16/00
X00400	XG.2000.1153-1	106-46-7	1,4-Dichlorobenzene	ND	ug / L	1	1	10/16/00
X00400	XG.2000.1153-1	90-12-0	1-Methylnaphthalene	ND	ug / L	1	1	10/16/00
X00400	XG.2000.1153-1	58-90-2	2,3,4,6-Tetrachlorophenol	ND	ug / L	1	5	10/16/00
X00400	XG.2000.1153-1	95-95-4	2,4,5-Trichlorophenol	ND	ug / L	1	5	10/16/00
X00400	XG.2000.1153-1	88-06-2	2,4,6-Trichlorophenol	ND	ug / L	1	5	10/16/00
X00400	XG.2000.1153-1	120-83-2	2,4-Dichlorophenol	ND	ug / L	1	5	10/16/00
X00400	XG.2000.1153-1	105-67-9	2,4-Dimethylphenol	ND	ug / L	1	1	10/16/00
X00400	XG.2000.1153-1	51-28-5	2,4-Dinitrophenol	ND	ug / L	1	10	10/16/00
X00400	XG.2000.1153-1	121-14-2	2,4-Dinitrotoluene	ND	ug / L	1	5	10/16/00
X00400	XG.2000.1153-1	606-20-2	2,6-Dinitrotoluene	ND	ug / L	1	5	10/16/00
X00400	XG.2000.1153-1	91-58-7	2-Chloronaphthalene	ND	ug / L	1	1	10/16/00
X00400	XG.2000.1153-1	95-57-8	2-Chlorophenol	ND	ug / L	1	1	10/16/00
X00400	XG.2000.1153-1	91-57-6	2-Methylnaphthalene	ND	ug / L	1	1	10/16/00
X00400	XG.2000.1153-1	95-48-7	2-Methylphenol	ND	ug / L	1	1	10/16/00
X00400	XG.2000.1153-1	88-74-4	2-Nitroaniline	ND	ug / L	1	5	10/16/00
X00400	XG.2000.1153-1	88-75-5	2-Nitrophenol	ND	ug / L	1	5	10/16
X00400	XG.2000.1153-1		3+4 Methylphenol	ND	ug / L	1	1	10/1
X00400	XG.2000.1153-1	91-94-1	3,3-Dichlorobenzidine	ND	ug / L	1	10	10/16/00
X00400	XG.2000.1153-1	99-09-2	3-Nitroaniline	ND	ug / L	1	5	10/16/00
X00400	XG.2000.1153-1	534-52-1	4,6-Dinitro-2-methylphenol	ND	ug / L	1	10	10/16/00
X00400	XG.2000.1153-1	101-55-3	4-Bromophenyl-phenylether	ND	ug / L	1	1	10/16/00
X00400	XG.2000.1153-1	59-50-7	4-Chloro-3-methylphenol	ND	ug / L	1	5	10/16/00
X00400	XG.2000.1153-1	106-47-8	4-Chloroaniline	ND	ug / L	1	5	10/16/00
X00400	XG.2000.1153-1	7005-72-3	4-Chlorophenyl-phenylether	ND	ug / L	1	1	10/16/00
X00400	XG.2000.1153-1	100-01-6	4-Nitroaniline	ND	ug / L	1	5	10/16/00
X00400	XG.2000.1153-1	100-02-7	4-Nitrophenol	ND	ug / L	1	10	10/16/00
X00400	XG.2000.1153-1	83-32-9	Acenaphthene	ND	ug / L	1	1	10/16/00
X00400	XG.2000.1153-1	208-96-8	Acenaphthylene	ND	ug / L	1	1	10/16/00
X00400	XG.2000.1153-1	62-53-3	Aniline	ND	ug / L	1	10	10/16/00
X00400	XG.2000.1153-1	120-12-7	Anthracene	ND	ug / L	1	1	10/16/00
X00400	XG.2000.1153-1		Azobenzene&1,2-Diphenylhydrazine	ND	ug / L	1	1	10/16/00
X00400	XG.2000.1153-1	56-55-3	Benzo (a) anthracene	ND	ug / L	1	1	10/16/00
X00400	XG.2000.1153-1	50-32-8	Benzo(a)pyrene	ND	ug / L	1	1	10/16/00
X00400	XG.2000.1153-1		Benzo(b & k)fluoranthene	ND	ug / L	1	1	10/16/00
X00400	XG.2000.1153-1	191-24-2	Benzo(g,h,i)perylene	ND	ug / L	1	1	10/16/00
X00400	XG.2000.1153-1	64-85-0	Benzoic acid	ND	ug / L	1	25	10/16/00
X00400	XG.2000.1153-1	100-51-6	Benzyl alcohol	ND	ug / L	1	5	10/16/00
X00400	XG.2000.1153-1	111-44-4	bis (2-Chloroethyl) ether	ND	ug / L	1	1	10/16/00
X00400	XG.2000.1153-1	111-91-1	bis(2-Chloroethoxy)methane	ND	ug / L	1	1	10/16/00
X00400	XG.2000.1153-1	108-60-1	bis(2-Chloroisopropyl)ether	ND	ug / L	1	1	10/16/00
X00400	XG.2000.1153-1	117-81-7	bis(2-Ethylhexyl)phthalate	ND	ug / L	1	5	10/16/
X00400	XG.2000.1153-1	85-68-7	Butylbenzylphthalate	ND	ug / L	1	1	10/1

Quality Control Summary

Explanation of codes

D	*Not applicable due to sample dilution*
L	*Not applicable due to MDL proximity*

nt: **CH2MHILL**

ect: **0010135** **KAFB ST 106**

X00400	XG.2000.1153-1	218-01-9	Chrysene	ND	ug / L	1	1		10/16/00
X00400	XG.2000.1153-1	84-74-2	di-n-Butylphthalate	ND	ug / L	1	1		10/16/00
X00400	XG.2000.1153-1	117-84-0	di-n-Octylpthalate	ND	ug / L	1	1		10/16/00
X00400	XG.2000.1153-1	53-70-3	Dibenz(a,h)anthracene	ND	ug / L	1	1		10/16/00
X00400	XG.2000.1153-1	132-64-9	Dibenzofuran	ND	ug / L	1	1		10/16/00
X00400	XG.2000.1153-1	84-66-2	Diethylphthalate	ND	ug / L	1	1		10/16/00
X00400	XG.2000.1153-1	131-11-3	Dimethylphthalate	ND	ug / L	1	1		10/16/00
X00400	XG.2000.1153-1	206-44-0	Fluoranthene	ND	ug / L	1	1		10/16/00
X00400	XG.2000.1153-1	86737	Fluorene	ND	ug / L	1	1		10/16/00
X00400	XG.2000.1153-1	118-74-1	Hexachlorobenzene	ND	ug / L	1	10		10/16/00
X00400	XG.2000.1153-1	87-68-3	Hexachlorobutadiene	ND	ug / L	1	10		10/16/00
X00400	XG.2000.1153-1	77-47-4	Hexachlorocyclopentadiene	ND	ug / L	1	10		10/16/00
X00400	XG.2000.1153-1	67-72-1	Hexachloroethane	ND	ug / L	1	5		10/16/00
X00400	XG.2000.1153-1	193-39-5	Indeno(1,2,3-cd)pyrene	ND	ug / L	1	1		10/16/00
X00400	XG.2000.1153-1	78-59-1	Isophorone	ND	ug / L	1	1		10/16/00
X00400	XG.2000.1153-1	621-64-7	n-Nitroso-di-n-propylamine	ND	ug / L	1	1		10/16/00
X00400	XG.2000.1153-1	62-75-9	n-Nitroso-dimethyl-amine	ND	ug / L	1	10		10/16/00
X00400	XG.2000.1153-1	86-30-6	n-Nitrosodiphenylamine	ND	ug / L	1	1		10/16/00
X00400	XG.2000.1153-1	91-20-3	Naphthalene	ND	ug / L	1	1		10/16/00
X00400	XG.2000.1153-1	98-95-3	Nitrobenzene	ND	ug / L	1	1		10/16/00
X00400	XG.2000.1153-1	87-86-5	Pentachlorophenol	ND	ug / L	1	10		10/16/00
X00400	XG.2000.1153-1	85-01-8	Phenanthrene	ND	ug / L	1	1		10/16/00
X00400	XG.2000.1153-1	108-95-2	Phenol	ND	ug / L	1	10		10/16/00
0	XG.2000.1153-1	129-00-0	Pyrene	ND	ug / L	1	1		10/16/00
00	XG.2000.1153-1	110-86-1	Pyridine	ND	ug / L	1	10		10/16/00

X00400-014 **SW846 3510B/8270B SVOCs by GC/MS**

X00400	XG.2000.1146-4	120-82-1	1,2,4-Trichlorobenzene	ND	ug / L	1	1		10/16/00
X00400	XG.2000.1195-1	120-82-1	1,2,4-Trichlorobenzene	ND	ug / L	1	1		10/16/00
X00400	XG.2000.1146-4	95-50-1	1,2-Dichlorobenzene	ND	ug / L	1	1		10/16/00
X00400	XG.2000.1195-1	95-50-1	1,2-Dichlorobenzene	ND	ug / L	1	1		10/16/00
X00400	XG.2000.1146-4	541-73-1	1,3-Dichlorobenzene	ND	ug / L	1	1		10/16/00
X00400	XG.2000.1195-1	541-73-1	1,3-Dichlorobenzene	ND	ug / L	1	1		10/16/00
X00400	XG.2000.1146-4	106-46-7	1,4-Dichlorobenzene	ND	ug / L	1	1		10/16/00
X00400	XG.2000.1195-1	106-46-7	1,4-Dichlorobenzene	ND	ug / L	1	1		10/16/00
X00400	XG.2000.1146-4	90-12-0	1-Methylnaphthalene	ND	ug / L	1	1		10/16/00
X00400	XG.2000.1195-1	90-12-0	1-Methylnaphthalene	ND	ug / L	1	1		10/16/00
X00400	XG.2000.1146-4	58-90-2	2,3,4,6-Tetrachlorophenol	ND	ug / L	1	5		10/16/00
X00400	XG.2000.1195-1	58-90-2	2,3,4,6-Tetrachlorophenol	ND	ug / L	1	5		10/16/00
X00400	XG.2000.1146-4	95-95-4	2,4,5-Trichlorophenol	ND	ug / L	1	5		10/16/00
X00400	XG.2000.1195-1	95-95-4	2,4,5-Trichlorophenol	ND	ug / L	1	5		10/16/00
X00400	XG.2000.1146-4	88-06-2	2,4,6-Trichlorophenol	ND	ug / L	1	5		10/16/00
X00400	XG.2000.1195-1	88-06-2	2,4,6-Trichlorophenol	ND	ug / L	1	5		10/16/00
X00400	XG.2000.1146-4	120-83-2	2,4-Dichlorophenol	ND	ug / L	1	5		10/16/00
X00400	XG.2000.1195-1	120-83-2	2,4-Dichlorophenol	ND	ug / L	1	5		10/16/00
X00400	XG.2000.1146-4	105-67-9	2,4-Dimethylphenol	ND	ug / L	1	1		10/16/00
X00400	XG.2000.1195-1	105-67-9	2,4-Dimethylphenol	ND	ug / L	1	1		10/16/00
X00400	XG.2000.1146-4	51-28-5	2,4-Dinitrophenol	ND	ug / L	1	10		10/16/00
X00400	XG.2000.1195-1	51-28-5	2,4-Dinitrophenol	ND	ug / L	1	10		10/16/00
00	XG.2000.1146-4	121-14-2	2,4-Dinitrotoluene	ND	ug / L	1	5		10/16/00
00	XG.2000.1195-1	121-14-2	2,4-Dinitrotoluene	ND	ug / L	1	5		10/16/00

Quality Control Summary

Client: **CH2MHILL**

Project: **0010135** **KAFB ST 106**

Explanation of codes

D *Not applicable due to sample dilut*

L *Not applicable due to MDL proxim*

X00400	XG.2000.1146-4	606-20-2	2,6-Dinitrotoluene	ND	ug / L	1	5	10/16/0(
X00400	XG.2000.1195-1	606-20-2	2,6-Dinitrotoluene	ND	ug / L	1	5	10/16/0(
X00400	XG.2000.1146-4	91-58-7	2-Chloronaphthalene	ND	ug / L	1	1	10/16/0(
X00400	XG.2000.1195-1	91-58-7	2-Chloronaphthalene	ND	ug / L	1	1	10/16/0(
X00400	XG.2000.1146-4	95-57-8	2-Chlorophenol	ND	ug / L	1	1	10/16/0(
X00400	XG.2000.1195-1	95-57-8	2-Chlorophenol	ND	ug / L	1	1	10/16/0(
X00400	XG.2000.1146-4	91-57-6	2-Methylnaphthalene	ND	ug / L	1	1	10/16/0(
X00400	XG.2000.1195-1	91-57-6	2-Methylnaphthalene	ND	ug / L	1	1	10/16/0(
X00400	XG.2000.1146-4	95-48-7	2-Methylphenol	ND	ug / L	1	1	10/16/0(
X00400	XG.2000.1195-1	95-48-7	2-Methylphenol	ND	ug / L	1	1	10/16/0(
X00400	XG.2000.1146-4	88-74-4	2-Nitroaniline	ND	ug / L	1	5	10/16/0(
X00400	XG.2000.1195-1	88-74-4	2-Nitroaniline	ND	ug / L	1	5	10/16/0(
X00400	XG.2000.1146-4	88-75-5	2-Nitrophenol	ND	ug / L	1	5	10/16/0(
X00400	XG.2000.1195-1	88-75-5	2-Nitrophenol	ND	ug / L	1	5	10/16/0(
X00400	XG.2000.1146-4		3+4 Methylphenol	ND	ug / L	1	1	10/16/0(
X00400	XG.2000.1195-1		3+4 Methylphenol	ND	ug / L	1	1	10/16/0(
X00400	XG.2000.1146-4	91-94-1	3,3-Dichlorobenzidine	ND	ug / L	1	10	10/16/0(
X00400	XG.2000.1195-1	91-94-1	3,3-Dichlorobenzidine	ND	ug / L	1	10	10/16/0(
X00400	XG.2000.1146-4	99-09-2	3-Nitroaniline	ND	ug / L	1	5	10/16/0(
X00400	XG.2000.1195-1	99-09-2	3-Nitroaniline	ND	ug / L	1	5	10/16/0(
X00400	XG.2000.1146-4	534-52-1	4,6-Dinitro-2-methylphenol	ND	ug / L	1	10	10/16/0(
X00400	XG.2000.1195-1	534-52-1	4,6-Dinitro-2-methylphenol	ND	ug / L	1	10	10/16/0(
X00400	XG.2000.1146-4	101-55-3	4-Bromophenyl-phenylether	ND	ug / L	1	1	10/16/0(
X00400	XG.2000.1195-1	101-55-3	4-Bromophenyl-phenylether	ND	ug / L	1	1	10/16
X00400	XG.2000.1146-4	59-50-7	4-Chloro-3-methylphenol	ND	ug / L	1	5	10/16
X00400	XG.2000.1195-1	59-50-7	4-Chloro-3-methylphenol	ND	ug / L	1	5	10/16/0(
X00400	XG.2000.1146-4	106-47-8	4-Chloroaniline	ND	ug / L	1	5	10/16/0(
X00400	XG.2000.1195-1	106-47-8	4-Chloroaniline	ND	ug / L	1	5	10/16/0(
X00400	XG.2000.1146-4	7005-72-3	4-Chlorophenyl-phenylether	ND	ug / L	1	1	10/16/0(
X00400	XG.2000.1195-1	7005-72-3	4-Chlorophenyl-phenylether	ND	ug / L	1	1	10/16/0(
X00400	XG.2000.1146-4	100-01-6	4-Nitroaniline	ND	ug / L	1	5	10/16/0(
X00400	XG.2000.1195-1	100-01-6	4-Nitroaniline	ND	ug / L	1	5	10/16/0(
X00400	XG.2000.1146-4	100-02-7	4-Nitrophenol	ND	ug / L	1	10	10/16/0(
X00400	XG.2000.1195-1	100-02-7	4-Nitrophenol	ND	ug / L	1	10	10/16/0(
X00400	XG.2000.1146-4	83-32-9	Acenaphthene	ND	ug / L	1	1	10/16/0(
X00400	XG.2000.1195-1	83-32-9	Acenaphthene	ND	ug / L	1	1	10/16/0(
X00400	XG.2000.1146-4	208-96-8	Acenaphthylene	ND	ug / L	1	1	10/16/0(
X00400	XG.2000.1195-1	208-96-8	Acenaphthylene	ND	ug / L	1	1	10/16/0(
X00400	XG.2000.1146-4	62-53-3	Aniline	ND	ug / L	1	10	10/16/0(
X00400	XG.2000.1195-1	62-53-3	Aniline	ND	ug / L	1	10	10/16/0(
X00400	XG.2000.1146-4	120-12-7	Anthracene	ND	ug / L	1	1	10/16/0(
X00400	XG.2000.1195-1	120-12-7	Anthracene	ND	ug / L	1	1	10/16/0(
X00400	XG.2000.1146-4		Azobenzene&1,2-Diphenylhydrazine	ND	ug / L	1	1	10/16/0(
X00400	XG.2000.1195-1		Azobenzene&1,2-Diphenylhydrazine	ND	ug / L	1	1	10/16/0(
X00400	XG.2000.1146-4	56-55-3	Benzo (a) anthracene	ND	ug / L	1	1	10/16/0(
X00400	XG.2000.1195-1	56-55-3	Benzo (a) anthracene	ND	ug / L	1	1	10/16/0(
X00400	XG.2000.1146-4	50-32-8	Benzo(a)pyrene	ND	ug / L	1	1	10/16/0(
X00400	XG.2000.1195-1	50-32-8	Benzo(a)pyrene	ND	ug / L	1	1	10/16/
X00400	XG.2000.1146-4		Benzo(b & k)fluoranthene	ND	ug / L	1	1	10/16

Quality Control Summary

Explanation of codes

D *Not applicable due to sample dilution*

L *Not applicable due to MDL proximity*

Client: CH2MHILL

Project: 0010135 KAFB ST 106

X00400	XG.2000.1195-1		Benzo(b & k)fluoranthene	ND	ug / L	1	1	10/16/00
X00400	XG.2000.1146-4	191-24-2	Benzo(g,h,i)perylene	ND	ug / L	1	1	10/16/00
X00400	XG.2000.1195-1	191-24-2	Benzo(g,h,i)perylene	ND	ug / L	1	1	10/16/00
X00400	XG.2000.1146-4	64-85-0	Benzoic acid	ND	ug / L	1	25	10/16/00
X00400	XG.2000.1195-1	64-85-0	Benzoic acid	ND	ug / L	1	25	10/16/00
X00400	XG.2000.1146-4	100-51-6	Benzyl alcohol	ND	ug / L	1	5	10/16/00
X00400	XG.2000.1195-1	100-51-6	Benzyl alcohol	ND	ug / L	1	5	10/16/00
X00400	XG.2000.1146-4	111-44-4	bis (2-Chloroethyl) ether	ND	ug / L	1	1	10/16/00
X00400	XG.2000.1195-1	111-44-4	bis (2-Chloroethyl) ether	ND	ug / L	1	1	10/16/00
X00400	XG.2000.1146-4	111-91-1	bis(2-Chloroethoxy)methane	ND	ug / L	1	1	10/16/00
X00400	XG.2000.1195-1	111-91-1	bis(2-Chloroethoxy)methane	ND	ug / L	1	1	10/16/00
X00400	XG.2000.1146-4	108-60-1	bis(2-Chloroisopropyl)ether	ND	ug / L	1	1	10/16/00
X00400	XG.2000.1195-1	108-60-1	bis(2-Chloroisopropyl)ether	ND	ug / L	1	1	10/16/00
X00400	XG.2000.1146-4	117-81-7	bis(2-Ethylhexyl)phthalate	ND	ug / L	1	5	10/16/00
X00400	XG.2000.1195-1	117-81-7	bis(2-Ethylhexyl)phthalate	ND	ug / L	1	5	10/16/00
X00400	XG.2000.1146-4	85-68-7	Butylbenzylphthalate	ND	ug / L	1	1	10/16/00
X00400	XG.2000.1195-1	85-68-7	Butylbenzylphthalate	ND	ug / L	1	1	10/16/00
X00400	XG.2000.1146-4	218-01-9	Chrysene	ND	ug / L	1	1	10/16/00
X00400	XG.2000.1195-1	218-01-9	Chrysene	ND	ug / L	1	1	10/16/00
X00400	XG.2000.1146-4	84-74-2	di-n-Butylphthalate	ND	ug / L	1	1	10/16/00
X00400	XG.2000.1195-1	84-74-2	di-n-Butylphthalate	ND	ug / L	1	1	10/16/00
X00400	XG.2000.1146-4	117-84-0	di-n-Octylpthalate	ND	ug / L	1	1	10/16/00
X00400	XG.2000.1195-1	117-84-0	di-n-Octylpthalate	ND	ug / L	1	1	10/16/00
X00400	XG.2000.1146-4	53-70-3	Dibenz(a,h)anthracene	ND	ug / L	1	1	10/16/00
X00400	XG.2000.1195-1	53-70-3	Dibenz(a,h)anthracene	ND	ug / L	1	1	10/16/00
X00400	XG.2000.1146-4	132-64-9	Dibenzofuran	ND	ug / L	1	1	10/16/00
X00400	XG.2000.1195-1	132-64-9	Dibenzofuran	ND	ug / L	1	1	10/16/00
X00400	XG.2000.1146-4	84-66-2	Diethylphthalate	ND	ug / L	1	1	10/16/00
X00400	XG.2000.1195-1	84-66-2	Diethylphthalate	ND	ug / L	1	1	10/16/00
X00400	XG.2000.1146-4	131-11-3	Dimethylphthalate	ND	ug / L	1	1	10/16/00
X00400	XG.2000.1195-1	131-11-3	Dimethylphthalate	ND	ug / L	1	1	10/16/00
X00400	XG.2000.1146-4	206-44-0	Fluoranthene	ND	ug / L	1	1	10/16/00
X00400	XG.2000.1195-1	206-44-0	Fluoranthene	ND	ug / L	1	1	10/16/00
X00400	XG.2000.1146-4	86737	Fluorene	ND	ug / L	1	1	10/16/00
X00400	XG.2000.1195-1	86737	Fluorene	ND	ug / L	1	1	10/16/00
X00400	XG.2000.1146-4	118-74-1	Hexachlorobenzene	ND	ug / L	1	10	10/16/00
X00400	XG.2000.1195-1	118-74-1	Hexachlorobenzene	ND	ug / L	1	10	10/16/00
X00400	XG.2000.1146-4	87-68-3	Hexachlorobutadiene	ND	ug / L	1	10	10/16/00
X00400	XG.2000.1195-1	87-68-3	Hexachlorobutadiene	ND	ug / L	1	10	10/16/00
X00400	XG.2000.1146-4	77-47-4	Hexachlorocyclopentadiene	ND	ug / L	1	10	10/16/00
X00400	XG.2000.1195-1	77-47-4	Hexachlorocyclopentadiene	ND	ug / L	1	10	10/16/00
X00400	XG.2000.1146-4	67-72-1	Hexachloroethane	ND	ug / L	1	5	10/16/00
X00400	XG.2000.1195-1	67-72-1	Hexachloroethane	ND	ug / L	1	5	10/16/00
X00400	XG.2000.1146-4	193-39-5	Indeno(1,2,3-cd)pyrene	ND	ug / L	1	1	10/16/00
X00400	XG.2000.1195-1	193-39-5	Indeno(1,2,3-cd)pyrene	ND	ug / L	1	1	10/16/00
X00400	XG.2000.1146-4	78-59-1	Isophorone	ND	ug / L	1	1	10/16/00
X00400	XG.2000.1195-1	78-59-1	Isophorone	ND	ug / L	1	1	10/16/00
X00400	XG.2000.1146-4	621-64-7	n-Nitroso-di-n-propylamine	ND	ug / L	1	1	10/16/00
X00400	XG.2000.1195-1	621-64-7	n-Nitroso-di-n-propylamine	ND	ug / L	1	1	10/16/00
X00400	XG.2000.1146-4	62-75-9	n-Nitroso-dimethyl-amine	ND	ug / L	1	10	10/16/00
X00400	XG.2000.1195-1	62-75-9	n-Nitroso-dimethyl-amine	ND	ug / L	1	10	10/16/00

Quality Control Summary

Client: **CH2MHILL**

Project: **0010135** **KAFB ST 106**

Explanation of codes

D *Not applicable due to sample diluti*

L *Not applicable due to MDL proximi*

X00400	XG.2000.1146-4	86-30-6	n-Nitrosodiphenylamine	ND	ug / L	1	1		10/16/00
X00400	XG.2000.1195-1	86-30-6	n-Nitrosodiphenylamine	ND	ug / L	1	1		10/16/00
X00400	XG.2000.1146-4	91-20-3	Naphthalene	ND	ug / L	1	1		10/16/00
X00400	XG.2000.1195-1	91-20-3	Naphthalene	ND	ug / L	1	1		10/16/00
X00400	XG.2000.1146-4	98-95-3	Nitrobenzene	ND	ug / L	1	1		10/16/00
X00400	XG.2000.1195-1	98-95-3	Nitrobenzene	ND	ug / L	1	1		10/16/00
X00400	XG.2000.1146-4	87-86-5	Pentachlorophenol	ND	ug / L	1	10		10/16/00
X00400	XG.2000.1195-1	87-86-5	Pentachlorophenol	ND	ug / L	1	10		10/16/00
X00400	XG.2000.1146-4	85-01-8	Phenanthrene	ND	ug / L	1	1		10/16/00
X00400	XG.2000.1195-1	85-01-8	Phenanthrene	ND	ug / L	1	1		10/16/00
X00400	XG.2000.1146-4	108-95-2	Phenol	ND	ug / L	1	10		10/16/00
X00400	XG.2000.1195-1	108-95-2	Phenol	ND	ug / L	1	10		10/16/00
X00400	XG.2000.1146-4	129-00-0	Pyrene	ND	ug / L	1	1		10/16/00
X00400	XG.2000.1195-1	129-00-0	Pyrene	ND	ug / L	1	1		10/16/00
X00400	XG.2000.1146-4	110-86-1	Pyridine	ND	ug / L	1	10		10/16/00
X00400	XG.2000.1195-1	110-86-1	Pyridine	ND	ug / L	1	10		10/16/00
X00400-018		**SW846 3510B/8270B SVOCs by GC/MS**							
X00400	XG.2000.1187-2	120-82-1	1,2,4-Trichlorobenzene	ND	ug / L	1	1		10/23/00
X00400	XG.2000.1187-2	95-50-1	1,2-Dichlorobenzene	ND	ug / L	1	1		10/23/00
X00400	XG.2000.1187-2	541-73-1	1,3-Dichlorobenzene	ND	ug / L	1	1		10/23/00
X00400	XG.2000.1187-2	106-46-7	1,4-Dichlorobenzene	ND	ug / L	1	1		10/23/00
X00400	XG.2000.1187-2	90-12-0	1-Methylnaphthalene	ND	ug / L	1	1		10/23/00
X00400	XG.2000.1187-2	58-90-2	2,3,4,6-Tetrachlorophenol	ND	ug / L	1	5		10/23/00
X00400	XG.2000.1187-2	95-95-4	2,4,5-Trichlorophenol	ND	ug / L	1	5		10/23/
X00400	XG.2000.1187-2	88-06-2	2,4,6-Trichlorophenol	ND	ug / L	1	5		10/23/00
X00400	XG.2000.1187-2	120-83-2	2,4-Dichlorophenol	ND	ug / L	1	5		10/23/00
X00400	XG.2000.1187-2	105-67-9	2,4-Dimethylphenol	ND	ug / L	1	1		10/23/00
X00400	XG.2000.1187-2	51-28-5	2,4-Dinitrophenol	ND	ug / L	1	10		10/23/00
X00400	XG.2000.1187-2	121-14-2	2,4-Dinitrotoluene	ND	ug / L	1	5		10/23/00
X00400	XG.2000.1187-2	606-20-2	2,6-Dinitrotoluene	ND	ug / L	1	5		10/23/00
X00400	XG.2000.1187-2	91-58-7	2-Chloronaphthalene	ND	ug / L	1	1		10/23/00
X00400	XG.2000.1187-2	95-57-8	2-Chlorophenol	ND	ug / L	1	1		10/23/00
X00400	XG.2000.1187-2	91-57-6	2-Methylnaphthalene	ND	ug / L	1	1		10/23/00
X00400	XG.2000.1187-2	95-48-7	2-Methylphenol	ND	ug / L	1	1		10/23/00
X00400	XG.2000.1187-2	88-74-4	2-Nitroaniline	ND	ug / L	1	5		10/23/00
X00400	XG.2000.1187-2	88-75-5	2-Nitrophenol	ND	ug / L	1	5		10/23/00
X00400	XG.2000.1187-2		3+4 Methylphenol	ND	ug / L	1	1		10/23/00
X00400	XG.2000.1187-2	91-94-1	3,3-Dichlorobenzidine	ND	ug / L	1	10		10/23/00
X00400	XG.2000.1187-2	99-09-2	3-Nitroaniline	ND	ug / L	1	5		10/23/00
X00400	XG.2000.1187-2	534-52-1	4,6-Dinitro-2-methylphenol	ND	ug / L	1	10		10/23/00
X00400	XG.2000.1187-2	101-55-3	4-Bromophenyl-phenylether	ND	ug / L	1	1		10/23/00
X00400	XG.2000.1187-2	59-50-7	4-Chloro-3-methylphenol	ND	ug / L	1	5		10/23/00
X00400	XG.2000.1187-2	106-47-8	4-Chloroaniline	ND	ug / L	1	5		10/23/00
X00400	XG.2000.1187-2	7005-72-3	4-Chlorophenyl-phenylether	ND	ug / L	1	1		10/23/00
X00400	XG.2000.1187-2	100-01-6	4-Nitroaniline	ND	ug / L	1	5		10/23/00
X00400	XG.2000.1187-2	100-02-7	4-Nitrophenol	ND	ug / L	1	10		10/23/00
X00400	XG.2000.1187-2	83-32-9	Acenaphthene	ND	ug / L	1	1		10/23/00
X00400	XG.2000.1187-2	208-96-8	Acenaphthylene	ND	ug / L	1	1		10/23/00
X00400	XG.2000.1187-2	62-53-3	Aniline	ND	ug / L	1	10		10/23/00
X00400	XG.2000.1187-2	120-12-7	Anthracene	ND	ug / L	1	1		10/23/

Quality Control Summary

Explanation of codes

D *Not applicable due to sample dilution*
L *Not applicable due to MDL proximity*

Client: **CH2MHILL**
Project: **0010135** **KAFB ST 106**

X00400	XG.2000.1187-2		Azobenzene&1,2-Diphenylhydrazine	ND	ug / L	1	1		10/23/00
X00400	XG.2000.1187-2	56-55-3	Benzo (a) anthracene	ND	ug / L	1	1		10/23/00
X00400	XG.2000.1187-2	50-32-8	Benzo(a)pyrene	ND	ug / L	1	1		10/23/00
X00400	XG.2000.1187-2		Benzo(b & k)fluoranthene	ND	ug / L	1	1		10/23/00
X00400	XG.2000.1187-2	191-24-2	Benzo(g,h,i)perylene	ND	ug / L	1	1		10/23/00
X00400	XG.2000.1187-2	64-85-0	Benzoic acid	ND	ug / L	1	25		10/23/00
X00400	XG.2000.1187-2	100-51-6	Benzyl alcohol	ND	ug / L	1	5		10/23/00
X00400	XG.2000.1187-2	111-44-4	bis (2-Chloroethyl) ether	ND	ug / L	1	1		10/23/00
X00400	XG.2000.1187-2	111-91-1	bis(2-Chloroethoxy)methane	ND	ug / L	1	1		10/23/00
X00400	XG.2000.1187-2	108-60-1	bis(2-Chloroisopropyl)ether	ND	ug / L	1	1		10/23/00
X00400	XG.2000.1187-2	117-81-7	bis(2-Ethylhexyl)phthalate	ND	ug / L	1	5		10/23/00
X00400	XG.2000.1187-2	85-68-7	Butylbenzylphthalate	ND	ug / L	1	1		10/23/00
X00400	XG.2000.1187-2	218-01-9	Chrysene	ND	ug / L	1	1		10/23/00
X00400	XG.2000.1187-2	84-74-2	di-n-Butylphthalate	ND	ug / L	1	1		10/23/00
X00400	XG.2000.1187-2	117-84-0	di-n-Octylpthalate	ND	ug / L	1	1		10/23/00
X00400	XG.2000.1187-2	53-70-3	Dibenz(a,h)anthracene	ND	ug / L	1	1		10/23/00
X00400	XG.2000.1187-2	132-64-9	Dibenzofuran	ND	ug / L	1	1		10/23/00
X00400	XG.2000.1187-2	84-66-2	Diethylphthalate	ND	ug / L	1	1		10/23/00
X00400	XG.2000.1187-2	131-11-3	Dimethylphthalate	ND	ug / L	1	1		10/23/00
X00400	XG.2000.1187-2	206-44-0	Fluoranthene	ND	ug / L	1	1		10/23/00
X00400	XG.2000.1187-2	86737	Fluorene	ND	ug / L	1	1		10/23/00
X00400	XG.2000.1187-2	118-74-1	Hexachlorobenzene	ND	ug / L	1	10		10/23/00
[illegible]00	XG.2000.1187-2	87-68-3	Hexachlorobutadiene	ND	ug / L	1	10		10/23/00
[illegible]00	XG.2000.1187-2	77-47-4	Hexachlorocyclopentadiene	ND	ug / L	1	10		10/23/00
X00400	XG.2000.1187-2	67-72-1	Hexachloroethane	ND	ug / L	1	5		10/23/00
X00400	XG.2000.1187-2	193-39-5	Indeno(1,2,3-cd)pyrene	ND	ug / L	1	1		10/23/00
X00400	XG.2000.1187-2	78-59-1	Isophorone	ND	ug / L	1	1		10/23/00
X00400	XG.2000.1187-2	621-64-7	n-Nitroso-di-n-propylamine	ND	ug / L	1	1		10/23/00
X00400	XG.2000.1187-2	62-75-9	n-Nitroso-dimethyl-amine	ND	ug / L	1	10		10/23/00
X00400	XG.2000.1187-2	86-30-6	n-Nitrosodiphenylamine	ND	ug / L	1	1		10/23/00
X00400	XG.2000.1187-2	91-20-3	Naphthalene	ND	ug / L	1	1		10/23/00
X00400	XG.2000.1187-2	98-95-3	Nitrobenzene	ND	ug / L	1	1		10/23/00
X00400	XG.2000.1187-2	87-86-5	Pentachlorophenol	ND	ug / L	1	10		10/23/00
X00400	XG.2000.1187-2	85-01-8	Phenanthrene	ND	ug / L	1	1		10/23/00
X00400	XG.2000.1187-2	108-95-2	Phenol	ND	ug / L	1	10		10/23/00
X00400	XG.2000.1187-2	129-00-0	Pyrene	ND	ug / L	1	1		10/23/00
X00400	XG.2000.1187-2	110-86-1	Pyridine	ND	ug / L	1	10		10/23/00
X00400-022		**SW846 3510B/8270B SVOCs by GC/MS**							
X00400	XG.2000.1208-1	120-82-1	1,2,4-Trichlorobenzene	ND	ug / L	1	1		10/27/00
X00400	XG.2000.1208-1	95-50-1	1,2-Dichlorobenzene	ND	ug / L	1	1		10/27/00
X00400	XG.2000.1208-1	541-73-1	1,3-Dichlorobenzene	ND	ug / L	1	1		10/27/00
X00400	XG.2000.1208-1	106-46-7	1,4-Dichlorobenzene	ND	ug / L	1	1		10/27/00
X00400	XG.2000.1208-1	90-12-0	1-Methylnaphthalene	ND	ug / L	1	1		10/27/00
X00400	XG.2000.1208-1	58-90-2	2,3,4,6-Tetrachlorophenol	ND	ug / L	1	5		10/27/00
X00400	XG.2000.1208-1	95-95-4	2,4,5-Trichlorophenol	ND	ug / L	1	5		10/27/00
X00400	XG.2000.1208-1	88-06-2	2,4,6-Trichlorophenol	ND	ug / L	1	5		10/27/00
X00400	XG.2000.1208-1	120-83-2	2,4-Dichlorophenol	ND	ug / L	1	5		10/27/00
[illegible]400	XG.2000.1208-1	105-67-9	2,4-Dimethylphenol	ND	ug / L	1	1		10/27/00
[illegible]00	XG.2000.1208-1	51-28-5	2,4-Dinitrophenol	ND	ug / L	1	10		10/27/00

Quality Control Summary

Client: **CH2MHILL**

Project: **0010135** **KAFB ST 106**

Explanation of codes

D *Not applicable due to sample dilut*

L *Not applicable due to MDL proxim*

X00400	XG.2000.1208-1	121-14-2	2,4-Dinitrotoluene	ND	ug / L	1	5		10/27/0
X00400	XG.2000.1208-1	606-20-2	2,6-Dinitrotoluene	ND	ug / L	1	5		10/27/0
X00400	XG.2000.1208-1	91-58-7	2-Chloronaphthalene	ND	ug / L	1	1		10/27/0
X00400	XG.2000.1208-1	95-57-8	2-Chlorophenol	ND	ug / L	1	1		10/27/0
X00400	XG.2000.1208-1	91-57-6	2-Methylnaphthalene	ND	ug / L	1	1		10/27/0
X00400	XG.2000.1208-1	95-48-7	2-Methylphenol	ND	ug / L	1	1		10/27/0
X00400	XG.2000.1208-1	88-74-4	2-Nitroaniline	ND	ug / L	1	5		10/27/0
X00400	XG.2000.1208-1	88-75-5	2-Nitrophenol	ND	ug / L	1	5		10/27/0
X00400	XG.2000.1208-1		3+4 Methylphenol	ND	ug / L	1	1		10/27/0
X00400	XG.2000.1208-1	91-94-1	3,3-Dichlorobenzidine	ND	ug / L	1	10		10/27/0
X00400	XG.2000.1208-1	99-09-2	3-Nitroaniline	ND	ug / L	1	5		10/27/0
X00400	XG.2000.1208-1	534-52-1	4,6-Dinitro-2-methylphenol	ND	ug / L	1	10		10/27/0
X00400	XG.2000.1208-1	101-55-3	4-Bromophenyl-phenylether	ND	ug / L	1	1		10/27/0
X00400	XG.2000.1208-1	59-50-7	4-Chloro-3-methylphenol	ND	ug / L	1	5		10/27/0
X00400	XG.2000.1208-1	106-47-8	4-Chloroaniline	ND	ug / L	1	5		10/27/0
X00400	XG.2000.1208-1	7005-72-3	4-Chlorophenyl-phenylether	ND	ug / L	1	1		10/27/0
X00400	XG.2000.1208-1	100-01-6	4-Nitroaniline	ND	ug / L	1	5		10/27/0
X00400	XG.2000.1208-1	100-02-7	4-Nitrophenol	ND	ug / L	1	10		10/27/0
X00400	XG.2000.1208-1	83-32-9	Acenaphthene	ND	ug / L	1	1		10/27/0
X00400	XG.2000.1208-1	208-96-8	Acenaphthylene	ND	ug / L	1	1		10/27/0
X00400	XG.2000.1208-1	62-53-3	Aniline	ND	ug / L	1	10		10/27/0
X00400	XG.2000.1208-1	120-12-7	Anthracene	ND	ug / L	1	1		10/27/0
X00400	XG.2000.1208-1		Azobenzene&1,2-Diphenylhydrazine	ND	ug / L	1	1		10/27/0
X00400	XG.2000.1208-1	56-55-3	Benzo (a) anthracene	ND	ug / L	1	1		10/27
X00400	XG.2000.1208-1	50-32-8	Benzo(a)pyrene	ND	ug / L	1	1		10/27/0
X00400	XG.2000.1208-1		Benzo(b & k)fluoranthene	ND	ug / L	1	1		10/27/0
X00400	XG.2000.1208-1	191-24-2	Benzo(g,h,i)perylene	ND	ug / L	1	1		10/27/0
X00400	XG.2000.1208-1	64-85-0	Benzoic acid	ND	ug / L	1	25		10/27/0
X00400	XG.2000.1208-1	100-51-6	Benzyl alcohol	ND	ug / L	1	5		10/27/0
X00400	XG.2000.1208-1	111-44-4	bis (2-Chloroethyl) ether	ND	ug / L	1	1		10/27/0
X00400	XG.2000.1208-1	111-91-1	bis(2-Chloroethoxy)methane	ND	ug / L	1	1		10/27/0
X00400	XG.2000.1208-1	108-60-1	bis(2-Chloroisopropyl)ether	ND	ug / L	1	1		10/27/0
X00400	XG.2000.1208-1	117-81-7	bis(2-Ethylhexyl)phthalate	ND	ug / L	1	5		10/27/0
X00400	XG.2000.1208-1	85-68-7	Butylbenzylphthalate	ND	ug / L	1	1		10/27/0
X00400	XG.2000.1208-1	218-01-9	Chrysene	ND	ug / L	1	1		10/27/0
X00400	XG.2000.1208-1	84-74-2	di-n-Butylphthalate	ND	ug / L	1	1		10/27/0
X00400	XG.2000.1208-1	117-84-0	di-n-Octylpthalate	ND	ug / L	1	1		10/27/0
X00400	XG.2000.1208-1	53-70-3	Dibenz(a,h)anthracene	ND	ug / L	1	1		10/27/0
X00400	XG.2000.1208-1	132-64-9	Dibenzofuran	ND	ug / L	1	1		10/27/0
X00400	XG.2000.1208-1	84-66-2	Diethylphthalate	ND	ug / L	1	1		10/27/0
X00400	XG.2000.1208-1	131-11-3	Dimethylphthalate	ND	ug / L	1	1		10/27/0
X00400	XG.2000.1208-1	206-44-0	Fluoranthene	ND	ug / L	1	1		10/27/0
X00400	XG.2000.1208-1	86737	Fluorene	ND	ug / L	1	1		10/27/0
X00400	XG.2000.1208-1	118-74-1	Hexachlorobenzene	ND	ug / L	1	10		10/27/0
X00400	XG.2000.1208-1	87-68-3	Hexachlorobutadiene	ND	ug / L	1	10		10/27/0
X00400	XG.2000.1208-1	77-47-4	Hexachlorocyclopentadiene	ND	ug / L	1	10		10/27/0
X00400	XG.2000.1208-1	67-72-1	Hexachloroethane	ND	ug / L	1	5		10/27/0
X00400	XG.2000.1208-1	193-39-5	Indeno(1,2,3-cd)pyrene	ND	ug / L	1	1		10/27/0
X00400	XG.2000.1208-1	78-59-1	Isophorone	ND	ug / L	1	1		10/27
X00400	XG.2000.1208-1	621-64-7	n-Nitroso-di-n-propylamine	ND	ug / L	1	1		10/27

Quality Control Summary

t: CH2MHILL

Project: 0010135 KAFB ST 106

Explanation of codes

D *Not applicable due to sample dilution*

L *Not applicable due to MDL proximity*

X00400	XG.2000.1208-1	62-75-9	n-Nitroso-dimethyl-amine	ND	ug / L	1	10		10/27/00
X00400	XG.2000.1208-1	86-30-6	n-Nitrosodiphenylamine	ND	ug / L	1	1		10/27/00
X00400	XG.2000.1208-1	91-20-3	Naphthalene	ND	ug / L	1	1		10/27/00
X00400	XG.2000.1208-1	98-95-3	Nitrobenzene	ND	ug / L	1	1		10/27/00
X00400	XG.2000.1208-1	87-86-5	Pentachlorophenol	ND	ug / L	1	10		10/27/00
X00400	XG.2000.1208-1	85-01-8	Phenanthrene	ND	ug / L	1	1		10/27/00
X00400	XG.2000.1208-1	108-95-2	Phenol	ND	ug / L	1	10		10/27/00
X00400	XG.2000.1208-1	129-00-0	Pyrene	ND	ug / L	1	1		10/27/00
X00400	XG.2000.1208-1	110-86-1	Pyridine	ND	ug / L	1	10		10/27/00
X00404-001		**SW846 ME/8015A Diesel Range Organics by GC/FID**							
X00404	XG.2000.1139-17		Diesel Range Organics	ND	mg / L	1	25		10/14/00
X00404-008		**SW846 ME/8015A Diesel Range Organics by GC/FID**							
X00404	XG.2000.1150-24		Diesel Range Organics	ND	mg / L	1	25		10/17/00
X00404-010		**SW846 ME/8015A Diesel Range Organics by GC/FID**							
X00404	XG.2000.1189-1		Diesel Range Organics	ND	mg / L	1	25		10/23/00
X00405-001		**SW846 5030A/8015A GRO by GC/FID**							
X00405	XG.2000.1141-10		Gasoline Range Organics	ND	mg / L	1	0.05		10/16/00
X00405-008		**SW846 5030A/8015A GRO by GC/FID**							
X00405	XG.2000.1161-9		Gasoline Range Organics	ND	mg / L	1	0.05		10/19/00
X00405-010		**SW846 5030A/8015A GRO by GC/FID**							
5	XG.2000.1204-1		Gasoline Range Organics	ND	mg / L	1	0.05		10/23/00

QC Type **MS: Matrix Spike** QC Matrix **WATER**

QC Group	Run Sequence	CAS #	Analyte	Result	Units	Dilution Factor	Detection Limit	Code	Run Date
X00388-011		**SW846 8260A Purgeable VOCs by GC/MS**							
X00388	XG.2000.1100-11	75-34-3	1,1 Dichloroethene	107	% Recovery	1	NA		10/04/00
X00388	XG.2000.1100-11	106-46-7	1,4 Dichlorobenzene	102	% Recovery	1	NA		10/04/00
X00388	XG.2000.1100-11	71-43-2	Benzene	110	% Recovery	1	NA		10/04/00
X00388	XG.2000.1100-11	108-90-7	Chlorobenzene	107	% Recovery	1	NA		10/04/00
X00388	XG.2000.1100-11	108-88-3	Toluene	110	% Recovery	1	NA		10/04/00
X00388	XG.2000.1100-11	79-01-6	Trichloroethene	112	% Recovery	1	NA		10/04/00
X00400-016		**SW846 3510B/8270B SVOCs by GC/MS**							
X00400	XG.2000.1153-12	120-82-1	1,2,4-Trichlorobenzene	40	% Recovery	1	NA		10/16/00
X00400	XG.2000.1153-12	106-46-7	1,4-Dichlorobenzene	39	% Recovery	1	NA		10/16/00
X00400	XG.2000.1153-12	121-14-2	2,4-Dinitrotoluene	47	% Recovery	1	NA		10/16/00
X00400	XG.2000.1153-12	95-57-8	2-Chlorophenol	32	% Recovery	1	NA		10/16/00
X00400	XG.2000.1153-12	59-50-7	4-Chloro-3-methylphenol	33	% Recovery	1	NA		10/16/00
X00400	XG.2000.1153-12	100-02-7	4-Nitrophenol	< 1	% Recovery	1	NA		10/16/00
X00400	XG.2000.1153-12	83-32-9	Acenaphthene	53	% Recovery	1	NA		10/16/00
X00400	XG.2000.1153-12	117-84-0	di-n-Octylpthalate	28	% Recovery	1	NA		10/16/00
X00400	XG.2000.1153-12	621-64-7	n-Nitroso-di-n-propylamine	50	% Recovery	1	NA		10/16/00
0	XG.2000.1153-12	87-86-5	Pentachlorophenol	3	% Recovery	1	NA		10/16/00
00	XG.2000.1153-12	108-95-2	Phenol	18	% Recovery	1	NA		10/16/00

Quality Control Summary

Client: **CH2MHILL**

Project: **0010135** **KAFB ST 106**

Explanation of codes

D *Not applicable due to sample dilut*

L *Not applicable due to MDL proxim*

X00400	XG.2000.1153-12	129-00-0	Pyrene	58	% Recovery	1	NA		10/16/0
X00404-005		**SW846 ME/8015A Diesel Range Organics by GC/FID**							
X00404	XG.2000.1139-21		Diesel Range Organics	110	% Recovery	1	NA		10/14/0
X00405-005		**SW846 5030A/8015A GRO by GC/FID**							
X00405	XG.2000.1141-14		Gasoline Range Organics	97	% Recovery	1	NA		10/16/0

QC Type **MSD: Matrix Spike Duplicate Accuracy** QC Matrix **WATER**

QC Group	Run Sequence	CAS #	Analyte	Result	Units	Dilution Factor	Detection Limit	Code	Run Date
X00388-012		**SW846 8260A Purgeable VOCs by GC/MS**							
X00388	XG.2000.1100-12	75-34-3	1,1 Dichloroethene	107	% Recovery	1	NA		10/04/0
X00388	XG.2000.1100-12	106-46-7	1,4 Dichlorobenzene	101	% Recovery	1	NA		10/04/0
X00388	XG.2000.1100-12	71-43-2	Benzene	111	% Recovery	1	NA		10/04/0
X00388	XG.2000.1100-12	108-90-7	Chlorobenzene	108	% Recovery	1	NA		10/04/0
X00388	XG.2000.1100-12	108-88-3	Toluene	112	% Recovery	1	NA		10/04/0
X00388	XG.2000.1100-12	79-01-6	Trichloroethene	109	% Recovery	1	NA		10/04/0
X00400-017		**SW846 3510B/8270B SVOCs by GC/MS**							
X00400	XG.2000.1153-13	120-82-1	1,2,4-Trichlorobenzene	51	% Recovery	2	NA		10/16/0
X00400	XG.2000.1153-13	106-46-7	1,4-Dichlorobenzene	48	% Recovery	2	NA		10/16/0
X00400	XG.2000.1153-13	121-14-2	2,4-Dinitrotoluene	62	% Recovery	2	NA		10/16
X00400	XG.2000.1153-13	95-57-8	2-Chlorophenol	42	% Recovery	2	NA		10/16/
X00400	XG.2000.1153-13	59-50-7	4-Chloro-3-methylphenol	46	% Recovery	2	NA		10/16/0
X00400	XG.2000.1153-13	100-02-7	4-Nitrophenol	9	% Recovery	2	NA		10/16/0
X00400	XG.2000.1153-13	83-32-9	Acenaphthene	68	% Recovery	2	NA		10/16/0
X00400	XG.2000.1153-13	117-84-0	di-n-Octylpthalate	38	% Recovery	2	NA		10/16/0
X00400	XG.2000.1153-13	621-64-7	n-Nitroso-di-n-propylamine	61	% Recovery	2	NA		10/16/0
X00400	XG.2000.1153-13	87-86-5	Pentachlorophenol	6	% Recovery	2	NA		10/16/0
X00400	XG.2000.1153-13	108-95-2	Phenol	22	% Recovery	2	NA		10/16/0
X00400	XG.2000.1153-13	129-00-0	Pyrene	73	% Recovery	2	NA		10/16/0
X00404-006		**SW846 ME/8015A Diesel Range Organics by GC/FID**							
X00404	XG.2000.1139-22		Diesel Range Organics	109	% Recovery	1	NA		10/14/0
X00405-006		**SW846 5030A/8015A GRO by GC/FID**							
X00405	XG.2000.1141-15		Gasoline Range Organics	98	% Recovery	1	NA		10/16/0

QC Type **MSD: Matrix Spike Duplicate Precision** QC Matrix **WATER**

QC Group	Run Sequence	CAS #	Analyte	Result	Units	Dilution Factor	Detection Limit	Code	Run Date
X00388-012		**SW846 8260A Purgeable VOCs by GC/MS**							
X00388	XG.2000.1100-12	75-34-3	1,1 Dichloroethene	< 1	RPD	1	NA		10/04/0
X00388	XG.2000.1100-12	106-46-7	1,4 Dichlorobenzene	< 1	RPD	1	NA		10/04/0
X00388	XG.2000.1100-12	71-43-2	Benzene	< 1	RPD	1	NA		10/04/0
X00388	XG.2000.1100-12	108-90-7	Chlorobenzene	1	RPD	1	NA		10/04
X00388	XG.2000.1100-12	108-88-3	Toluene	< 1	RPD	1	NA		10/04/

Quality Control Summary

Explanation of codes

D	*Not applicable due to sample dilution*
L	*Not applicable due to MDL proximity*

Client: **CH2MHILL**

Project: **0010135** **KAFB ST 106**

X00388	XG.2000.1100-12	79-01-6	Trichloroethene	2	RPD	1	NA		10/04/00
X00400-017		**SW846 3510B/8270B SVOCs by GC/MS**							
X00400	XG.2000.1153-13	120-82-1	1,2,4-Trichlorobenzene	25	RPD	2	NA		10/16/00
X00400	XG.2000.1153-13	106-46-7	1,4-Dichlorobenzene	21	RPD	2	NA		10/16/00
X00400	XG.2000.1153-13	121-14-2	2,4-Dinitrotoluene	26	RPD	2	NA		10/16/00
X00400	XG.2000.1153-13	95-57-8	2-Chlorophenol	29	RPD	2	NA		10/16/00
X00400	XG.2000.1153-13	59-50-7	4-Chloro-3-methylphenol	33	RPD	2	NA		10/16/00
X00400	XG.2000.1153-13	100-02-7	4-Nitrophenol	200	RPD	2	NA		10/16/00
X00400	XG.2000.1153-13	83-32-9	Acenaphthene	25	RPD	2	NA		10/16/00
X00400	XG.2000.1153-13	117-84-0	di-n-Octylpthalate	31	RPD	2	NA		10/16/00
X00400	XG.2000.1153-13	621-64-7	n-Nitroso-di-n-propylamine	21	RPD	2	NA		10/16/00
X00400	XG.2000.1153-13	87-86-5	Pentachlorophenol	79	RPD	2	NA		10/16/00
X00400	XG.2000.1153-13	108-95-2	Phenol	19	RPD	2	NA		10/16/00
X00400	XG.2000.1153-13	129-00-0	Pyrene	23	RPD	2	NA		10/16/00
X00404-006		**SW846 ME/8015A Diesel Range Organics by GC/FID**							
X00404	XG.2000.1139-22		Diesel Range Organics	< 1	RPD	1	NA		10/14/00
X00405-006		**SW846 5030A/8015A GRO by GC/FID**							
X00405	XG.2000.1141-15		Gasoline Range Organics	1	RPD	1	NA		10/16/00

Surrogate Summary: QC

nt: CH2MHILL

Project: 0010135 KAFB ST 106

QC Type **LCS** QC Matrix **SOLID**

QC Group	Run Sequence	CAS #	Analyte	Result	Units	Dilution Factor	Detection Limit	Code	Run Date
X00367-002		**8270**							
X00367	XG.2000.1078-5	NA	*2,4,6-TRIBROMOPHENOL	107	% Recovery	1	NA		09/29/00
X00367	XG.2000.1078-5	NA	*2-FLUOROBIPHENYL	104	% Recovery	1	NA		09/29/00
X00367	XG.2000.1078-5	NA	*2-FLUOROPHENOL	92	% Recovery	1	NA		09/29/00
X00367	XG.2000.1078-5	NA	*NITROBENZENE-D5	96	% Recovery	1	NA		09/29/00
X00367	XG.2000.1078-5	NA	*PHENOL-D6	89	% Recovery	1	NA		09/29/00
X00367	XG.2000.1078-5	NA	*TERPHENYL-D14	99	% Recovery	1	NA		09/29/00
X00385-002		**GRO**							
X00385	XG.2000.1096-2	NA	4-Bromofluorobenzene-FID	99	% Recovery	1	NA		10/02/00
X00385	XG.2000.1096-2	NA	4-Bromofluorobenzene-PID	ND	% Recovery	1	NA		10/02/00
X00385	XG.2000.1096-2	NA	aaa-Trifluorotoluene-FID	104	% Recovery	1	NA		10/02/00
X00385	XG.2000.1096-2	NA	aaa-Trifluorotoluene-PID	ND	% Recovery	1	NA		10/02/00
X00392-002		**BTEXALL**							
X00392	XG.2000.1112-2	NA	4-Bromofluorobenzene	99	% Recovery	1	NA		10/05/00
X00392	XG.2000.1112-2	NA	aaa-Trifluorotoluene	100	% Recovery	1	NA		10/05/00
[illegible]92	XG.2000.1112-2	NA	Bromochloromethane	ND	% Recovery	1	NA		10/05/00
[illegible]2	XG.2000.1112-2	NA	Bromochloropropane	ND	% Recovery	1	NA		10/05/00
X00392	XG.2000.1112-2	NA	Dichlorobutane	ND	% Recovery	1	NA		10/05/00
X00398-005		**8260**							
X00398	XG.2000.1158-3	NA	1,2 Dichloroethane-D4 (SS)	87	% Recovery	1	NA		10/10/00
X00398	XG.2000.1206-2	NA	1,2 Dichloroethane-D4 (SS)	87	% Recovery	1	NA		10/10/00
X00398	XG.2000.1158-3	NA	4-Bromofluorobenzene (SS)	98	% Recovery	1	NA		10/10/00
X00398	XG.2000.1206-2	NA	4-Bromofluorobenzene (SS)	98	% Recovery	1	NA		10/10/00
X00398	XG.2000.1158-3	NA	Dibromofluoromethane (SS)	98	% Recovery	1	NA		10/10/00
X00398	XG.2000.1206-2	NA	Dibromofluoromethane (SS)	98	% Recovery	1	NA		10/10/00
X00398	XG.2000.1158-3	NA	Toluene-D8 (SS)	100	% Recovery	1	NA		10/10/00
X00398	XG.2000.1206-2	NA	Toluene-D8 (SS)	100	% Recovery	1	NA		10/10/00
X00403-002		**DRO**							
X00403	XG.2000.1139-2	NA	O-terphenyl	99	% Recovery	1	NA		10/13/00

QC Type **LCSD** QC Matrix **SOLID**

QC Group	Run Sequence	CAS #	Analyte	Result	Units	Dilution Factor	Detection Limit	Code	Run Date
X00367-003		**8270**							
X00367	XG.2000.1078-6	NA	*2,4,6-TRIBROMOPHENOL	100	% Recovery	1	NA		09/29/00
X00367	XG.2000.1078-6	NA	*2-FLUOROBIPHENYL	97	% Recovery	1	NA		09/29/00
X00367	XG.2000.1078-6	NA	*2-FLUOROPHENOL	84	% Recovery	1	NA		09/29/00
[illegible]67	XG.2000.1078-6	NA	*NITROBENZENE-D5	89	% Recovery	1	NA		09/29/00
[illegible]367	XG.2000.1078-6	NA	*PHENOL-D6	82	% Recovery	1	NA		09/29/00

Surrogate Summary: QC

Client: **CH2MHILL**

Project: **0010135** **KAFB ST 106**

X00367	XG.2000.1078-6	NA	*TERPHENYL-D14	94	% Recovery	1	NA		09/29/00
X00385-003		GRO							
X00385	XG.2000.1096-3	NA	4-Bromofluorobenzene-FID	99	% Recovery	1	NA		10/02/00
X00385	XG.2000.1096-3	NA	4-Bromofluorobenzene-PID	ND	% Recovery	1	NA		10/02/00
X00385	XG.2000.1096-3	NA	aaa-Trifluorotoluene-FID	103	% Recovery	1	NA		10/02/00
X00385	XG.2000.1096-3	NA	aaa-Trifluorotoluene-PID	ND	% Recovery	1	NA		10/02/00
X00392-003		BTEXALL							
X00392	XG.2000.1112-3	NA	4-Bromofluorobenzene	100	% Recovery	1	NA		10/05/00
X00392	XG.2000.1112-3	NA	aaa-Trifluorotoluene	99	% Recovery	1	NA		10/05/00
X00392	XG.2000.1112-3	NA	Bromochloromethane	ND	% Recovery	1	NA		10/05/00
X00392	XG.2000.1112-3	NA	Bromochloropropane	ND	% Recovery	1	NA		10/05/00
X00392	XG.2000.1112-3	NA	Dichlorobutane	ND	% Recovery	1	NA		10/05/00
X00398-006		8260							
X00398	XG.2000.1158-4	NA	1,2 Dichloroethane-D4 (SS)	90	% Recovery	1	NA		10/10/00
X00398	XG.2000.1206-3	NA	1,2 Dichloroethane-D4 (SS)	90	% Recovery	1	NA		10/10/00
X00398	XG.2000.1158-4	NA	4-Bromofluorobenzene (SS)	100	% Recovery	1	NA		10/10/00
X00398	XG.2000.1206-3	NA	4-Bromofluorobenzene (SS)	100	% Recovery	1	NA		10/10/00
X00398	XG.2000.1158-4	NA	Dibromofluoromethane (SS)	99	% Recovery	1	NA		10/10/00
X00398	XG.2000.1206-3	NA	Dibromofluoromethane (SS)	99	% Recovery	1	NA		10/10/00
X00398	XG.2000.1158-4	NA	Toluene-D8 (SS)	101	% Recovery	1	NA		10/10/00
X00398	XG.2000.1206-3	NA	Toluene-D8 (SS)	101	% Recovery	1	NA		10/10/00
X00403-003		DRO							
X00403	XG.2000.1139-3	NA	O-terphenyl	96	% Recovery	1	NA		10/13/

QC Type **MB** QC Matrix **SOLID**

QC Group	Run Sequence	CAS #	Analyte	Result	Units	Dilution Factor	Detection Limit	Code	Run Date
X00367-001		8270							
X00367	XG.2000.1078-4	NA	*2,4,6-TRIBROMOPHENOL	94	% Recovery	1	NA		09/29/00
X00367	XG.2000.1078-4	NA	*2-FLUOROBIPHENYL	95	% Recovery	1	NA		09/29/00
X00367	XG.2000.1078-4	NA	*2-FLUOROPHENOL	80	% Recovery	1	NA		09/29/00
X00367	XG.2000.1078-4	NA	*NITROBENZENE-D5	84	% Recovery	1	NA		09/29/00
X00367	XG.2000.1078-4	NA	*PHENOL-D6	78	% Recovery	1	NA		09/29/00
X00367	XG.2000.1078-4	NA	*TERPHENYL-D14	94	% Recovery	1	NA		09/29/00
X00367-022		8270							
X00367	XG.2000.1111-5	NA	*2,4,6-TRIBROMOPHENOL	93	% Recovery	1	NA		10/05/00
X00367	XG.2000.1111-5	NA	*2-FLUOROBIPHENYL	89	% Recovery	1	NA		10/05/00
X00367	XG.2000.1111-5	NA	*2-FLUOROPHENOL	81	% Recovery	1	NA		10/05/00
X00367	XG.2000.1111-5	NA	*NITROBENZENE-D5	87	% Recovery	1	NA		10/05/00
X00367	XG.2000.1111-5	NA	*PHENOL-D6	86	% Recovery	1	NA		10/05/00
X00367	XG.2000.1111-5	NA	*TERPHENYL-D14	101	% Recovery	1	NA		10/05/00
X00367-024		8270							
X00367	XG.2000.1146-1	NA	*2,4,6-TRIBROMOPHENOL	93	% Recovery	1	NA		10/16/00
X00367	XG.2000.1146-1	NA	*2-FLUOROBIPHENYL	87	% Recovery	1	NA		10/16/
X00367	XG.2000.1146-1	NA	*2-FLUOROPHENOL	80	% Recovery	1	NA		10/16/

Surrogate Summary: QC

Client: **CH2MHILL**

Project: **0010135** **KAFB ST 106**

X00367	XG.2000.1146-1	NA	*NITROBENZENE-D5	85	% Recovery	1	NA	10/16/00
X00367	XG.2000.1146-1	NA	*PHENOL-D6	83	% Recovery	1	NA	10/16/00
X00367	XG.2000.1146-1	NA	*TERPHENYL-D14	102	% Recovery	1	NA	10/16/00
X00385-001		GRO						
X00385	XG.2000.1096-1	NA	4-Bromofluorobenzene-FID	88	% Recovery	1	NA	10/02/00
X00385	XG.2000.1096-1	NA	4-Bromofluorobenzene-PID	ND	% Recovery	1	NA	10/02/00
X00385	XG.2000.1096-1	NA	aaa-Trifluorotoluene-FID	96	% Recovery	1	NA	10/02/00
X00385	XG.2000.1096-1	NA	aaa-Trifluorotoluene-PID	ND	% Recovery	1	NA	10/02/00
X00385-010		GRO						
X00385	XG.2000.1096-7	NA	4-Bromofluorobenzene-FID	89	% Recovery	1	NA	10/03/00
X00385	XG.2000.1096-7	NA	4-Bromofluorobenzene-PID	ND	% Recovery	1	NA	10/03/00
X00385	XG.2000.1096-7	NA	aaa-Trifluorotoluene-FID	97	% Recovery	1	NA	10/03/00
X00385	XG.2000.1096-7	NA	aaa-Trifluorotoluene-PID	ND	% Recovery	1	NA	10/03/00
X00385-023		GRO						
X00385	XG.2000.1141-1	NA	4-Bromofluorobenzene-FID	92	% Recovery	1	NA	10/14/00
X00385	XG.2000.1141-1	NA	4-Bromofluorobenzene-PID	ND	% Recovery	1	NA	10/14/00
X00385	XG.2000.1141-1	NA	aaa-Trifluorotoluene-FID	99	% Recovery	1	NA	10/14/00
X00385	XG.2000.1141-1	NA	aaa-Trifluorotoluene-PID	ND	% Recovery	1	NA	10/14/00
X00385-031		GRO						
X00385	XG.2000.1141-8	NA	4-Bromofluorobenzene-FID	89	% Recovery	1	NA	10/16/00
X00385	XG.2000.1141-8	NA	4-Bromofluorobenzene-PID	ND	% Recovery	1	NA	10/16/00
[illegible]5	XG.2000.1141-8	NA	aaa-Trifluorotoluene-FID	96	% Recovery	1	NA	10/16/00
[illegible]5	XG.2000.1141-8	NA	aaa-Trifluorotoluene-PID	ND	% Recovery	1	NA	10/16/00
X00392-001		BTEXALL						
X00392	XG.2000.1112-1	NA	4-Bromofluorobenzene	98	% Recovery	1	NA	10/05/00
X00392	XG.2000.1112-1	NA	aaa-Trifluorotoluene	102	% Recovery	1	NA	10/05/00
X00392	XG.2000.1112-1	NA	Bromochloromethane	ND	% Recovery	1	NA	10/05/00
X00392	XG.2000.1112-1	NA	Bromochloropropane	ND	% Recovery	1	NA	10/05/00
X00392	XG.2000.1112-1	NA	Dichlorobutane	ND	% Recovery	1	NA	10/05/00
X00392-014		BTEXALL						
X00392	XG.2000.1156-1	NA	4-Bromofluorobenzene	99	% Recovery	1	NA	10/17/00
X00392	XG.2000.1156-1	NA	aaa-Trifluorotoluene	101	% Recovery	1	NA	10/17/00
X00392	XG.2000.1156-1	NA	Bromochloromethane	24	% Recovery	1	NA	10/17/00
X00392	XG.2000.1156-1	NA	Bromochloropropane	24	% Recovery	1	NA	10/17/00
X00392	XG.2000.1156-1	NA	Dichlorobutane	30	% Recovery	1	NA	10/17/00
X00392-024		BTEXALL						
X00392	XG.2000.1164-4	NA	4-Bromofluorobenzene	99	% Recovery	1	NA	10/18/00
X00392	XG.2000.1164-4	NA	aaa-Trifluorotoluene	101	% Recovery	1	NA	10/18/00
X00392	XG.2000.1164-4	NA	Bromochloromethane	93	% Recovery	1	NA	10/18/00
X00392	XG.2000.1164-4	NA	Bromochloropropane	75	% Recovery	1	NA	10/18/00
X00392	XG.2000.1164-4	NA	Dichlorobutane	71	% Recovery	1	NA	10/18/00
X00398-001		8260						
X00398	XG.2000.1158-1	NA	1,2 Dichloroethane-D4 (SS)	93	% Recovery	1	NA	10/10/00
X00398	XG.2000.1206-1	NA	1,2 Dichloroethane-D4 (SS)	93	% Recovery	1	NA	10/10/00
X00398	XG.2000.1158-1	NA	4-Bromofluorobenzene (SS)	100	% Recovery	1	NA	10/10/00
[illegible]8	XG.2000.1206-1	NA	4-Bromofluorobenzene (SS)	100	% Recovery	1	NA	10/10/00
[illegible]98	XG.2000.1158-1	NA	Dibromofluoromethane (SS)	99	% Recovery	1	NA	10/10/00

Surrogate Summary: QC

Client: **CH2MHILL**

Project: **0010135** **KAFB ST 106**

X00398	XG.2000.1206-1	NA	Dibromofluoromethane (SS)	99	% Recovery	1	NA		10/10/00
X00398	XG.2000.1158-1	NA	Toluene-D8 (SS)	102	% Recovery	1	NA		10/10/00
X00398	XG.2000.1206-1	NA	Toluene-D8 (SS)	102	% Recovery	1	NA		10/10/00
X00398-007		8260							
X00398	XG.2000.1158-5	NA	1,2 Dichloroethane-D4 (SS)	93	% Recovery	1	NA		10/16/00
X00398	XG.2000.1206-4	NA	1,2 Dichloroethane-D4 (SS)	93	% Recovery	1	NA		10/16/00
X00398	XG.2000.1158-5	NA	4-Bromofluorobenzene (SS)	99	% Recovery	1	NA		10/16/00
X00398	XG.2000.1206-4	NA	4-Bromofluorobenzene (SS)	99	% Recovery	1	NA		10/16/00
X00398	XG.2000.1158-5	NA	Dibromofluoromethane (SS)	99	% Recovery	1	NA		10/16/00
X00398	XG.2000.1206-4	NA	Dibromofluoromethane (SS)	99	% Recovery	1	NA		10/16/00
X00398	XG.2000.1158-5	NA	Toluene-D8 (SS)	100	% Recovery	1	NA		10/16/00
X00398	XG.2000.1206-4	NA	Toluene-D8 (SS)	100	% Recovery	1	NA		10/16/00
X00398-018		8260							
X00398	XG.2000.1158-12	NA	1,2 Dichloroethane-D4 (SS)	100	% Recovery	1	NA		10/17/00
X00398	XG.2000.1205-1	NA	1,2 Dichloroethane-D4 (SS)	100	% Recovery	1	NA		10/17/00
X00398	XG.2000.1206-7	NA	1,2 Dichloroethane-D4 (SS)	100	% Recovery	1	NA		10/17/00
X00398	XG.2000.1158-12	NA	4-Bromofluorobenzene (SS)	105	% Recovery	1	NA		10/17/00
X00398	XG.2000.1205-1	NA	4-Bromofluorobenzene (SS)	105	% Recovery	1	NA		10/17/00
X00398	XG.2000.1206-7	NA	4-Bromofluorobenzene (SS)	105	% Recovery	1	NA		10/17/00
X00398	XG.2000.1158-12	NA	Dibromofluoromethane (SS)	102	% Recovery	1	NA		10/17/00
X00398	XG.2000.1205-1	NA	Dibromofluoromethane (SS)	102	% Recovery	1	NA		10/17/00
X00398	XG.2000.1206-7	NA	Dibromofluoromethane (SS)	102	% Recovery	1	NA		10/17/00
X00398	XG.2000.1158-12	NA	Toluene-D8 (SS)	103	% Recovery	1	NA		10/17/
X00398	XG.2000.1205-1	NA	Toluene-D8 (SS)	103	% Recovery	1	NA		10/17/
X00398	XG.2000.1206-7	NA	Toluene-D8 (SS)	103	% Recovery	1	NA		10/17/00
X00398-028		8260							
X00398	XG.2000.1205-3	NA	1,2 Dichloroethane-D4 (SS)	99	% Recovery	1	NA		10/26/00
X00398	XG.2000.1206-9	NA	1,2 Dichloroethane-D4 (SS)	99	% Recovery	1	NA		10/26/00
X00398	XG.2000.1205-3	NA	4-Bromofluorobenzene (SS)	101	% Recovery	1	NA		10/26/00
X00398	XG.2000.1206-9	NA	4-Bromofluorobenzene (SS)	101	% Recovery	1	NA		10/26/00
X00398	XG.2000.1205-3	NA	Dibromofluoromethane (SS)	101	% Recovery	1	NA		10/26/00
X00398	XG.2000.1206-9	NA	Dibromofluoromethane (SS)	101	% Recovery	1	NA		10/26/00
X00398	XG.2000.1205-3	NA	Toluene-D8 (SS)	100	% Recovery	1	NA		10/26/00
X00398	XG.2000.1206-9	NA	Toluene-D8 (SS)	100	% Recovery	1	NA		10/26/00
X00403-001		DRO							
X00403	XG.2000.1139-1	NA	O-terphenyl	85	% Recovery	1	NA		10/13/00
X00403-017		DRO							
X00403	XG.2000.1150-1	NA	O-terphenyl	88	% Recovery	1	NA		10/16/00

QC Type **MS** QC Matrix **SOLID**

QC Group	Run Sequence	CAS #	Analyte	Result	Units	Dilution Factor	Detection Limit	Code	Run Date
X00367-009		8270							
X00367	XG.2000.1080-7	NA	*2,4,6-TRIBROMOPHENOL	112	% Recovery	1	NA		09/30/00
X00367	XG.2000.1080-7	NA	*2-FLUOROBIPHENYL	98	% Recovery	1	NA		09/30/

Surrogate Summary: QC

Client: **CH2MHILL**

Project: **0010135** **KAFB ST 106**

X00367	XG.2000.1080-7	NA	*2-FLUOROPHENOL	85	% Recovery	1	NA	09/30/00
X00367	XG.2000.1080-7	NA	*NITROBENZENE-D5	92	% Recovery	1	NA	09/30/00
X00367	XG.2000.1080-7	NA	*PHENOL-D6	88	% Recovery	1	NA	09/30/00
X00367	XG.2000.1080-7	NA	*TERPHENYL-D14	111	% Recovery	1	NA	09/30/00
X00385-012		GRO						
X00385	XG.2000.1096-9	NA	4-Bromofluorobenzene-FID	97	% Recovery	20	NA	10/03/00
X00385	XG.2000.1096-9	NA	4-Bromofluorobenzene-PID	296	% Recovery	20	NA	10/03/00
X00385	XG.2000.1096-9	NA	aaa-Trifluorotoluene-FID	99	% Recovery	20	NA	10/03/00
X00385	XG.2000.1096-9	NA	aaa-Trifluorotoluene-PID	ND	% Recovery	20	NA	10/03/00
X00392-005		BTEXALL						
X00392	XG.2000.1112-5	NA	4-Bromofluorobenzene	102	% Recovery	1	NA	10/05/00
X00392	XG.2000.1112-5	NA	aaa-Trifluorotoluene	100	% Recovery	1	NA	10/05/00
X00392	XG.2000.1112-5	NA	Bromochloromethane	ND	% Recovery	1	NA	10/05/00
X00392	XG.2000.1112-5	NA	Bromochloropropane	ND	% Recovery	1	NA	10/05/00
X00392	XG.2000.1112-5	NA	Dichlorobutane	ND	% Recovery	1	NA	10/05/00
X00398-016		8260						
X00398	XG.2000.1158-10	NA	1,2 Dichloroethane-D4 (SS)	91	% Recovery	1	NA	10/17/00
X00398	XG.2000.1206-5	NA	1,2 Dichloroethane-D4 (SS)	91	% Recovery	1	NA	10/17/00
X00398	XG.2000.1158-10	NA	4-Bromofluorobenzene (SS)	100	% Recovery	1	NA	10/17/00
X00398	XG.2000.1206-5	NA	4-Bromofluorobenzene (SS)	100	% Recovery	1	NA	10/17/00
X00398	XG.2000.1158-10	NA	Dibromofluoromethane (SS)	90	% Recovery	1	NA	10/17/00
[illegible]8	XG.2000.1206-5	NA	Dibromofluoromethane (SS)	90	% Recovery	1	NA	10/17/00
[illegible]3	XG.2000.1158-10	NA	Toluene-D8 (SS)	101	% Recovery	1	NA	10/17/00
X00398	XG.2000.1206-5	NA	Toluene-D8 (SS)	101	% Recovery	1	NA	10/17/00
X00403-005		DRO						
X00403	XG.2000.1139-5	NA	O-terphenyl	99	% Recovery	1	NA	10/13/00

QC Type **MSD** QC Matrix **SOLID**

QC Group	Run Sequence	CAS #	Analyte	Result	Units	Dilution Factor	Detection Limit	Code	Run Date
X00367-010		8270							
X00367	XG.2000.1080-8	NA	*2,4,6-TRIBROMOPHENOL	110	% Recovery	1	NA		09/30/00
X00367	XG.2000.1080-8	NA	*2-FLUOROBIPHENYL	99	% Recovery	1	NA		09/30/00
X00367	XG.2000.1080-8	NA	*2-FLUOROPHENOL	82	% Recovery	1	NA		09/30/00
X00367	XG.2000.1080-8	NA	*NITROBENZENE-D5	86	% Recovery	1	NA		09/30/00
X00367	XG.2000.1080-8	NA	*PHENOL-D6	81	% Recovery	1	NA		09/30/00
X00367	XG.2000.1080-8	NA	*TERPHENYL-D14	109	% Recovery	1	NA		09/30/00
X00385-013		GRO							
X00385	XG.2000.1096-10	NA	4-Bromofluorobenzene-FID	95	% Recovery	20	NA		10/03/00
X00385	XG.2000.1096-10	NA	4-Bromofluorobenzene-PID	ND	% Recovery	20	NA		10/03/00
X00385	XG.2000.1096-10	NA	aaa-Trifluorotoluene-FID	103	% Recovery	20	NA		10/03/00
X00385	XG.2000.1096-10	NA	aaa-Trifluorotoluene-PID	ND	% Recovery	20	NA		10/03/00
X[illegible]92-006		BTEXALL							
[illegible]2	XG.2000.1112-6	NA	4-Bromofluorobenzene	101	% Recovery	1	NA		10/05/00
X00392	XG.2000.1112-6	NA	aaa-Trifluorotoluene	99	% Recovery	1	NA		10/05/00

Surrogate Summary: QC

Client: **CH2MHILL**

Project: **0010135** **KAFB ST 106**

X00392	XG.2000.1112-6	NA	Bromochloromethane	ND	% Recovery	1	NA		10/05/0
X00392	XG.2000.1112-6	NA	Bromochloropropane	ND	% Recovery	1	NA		10/05/0
X00392	XG.2000.1112-6	NA	Dichlorobutane	ND	% Recovery	1	NA		10/05/0
X00398-017		8260							
X00398	XG.2000.1158-11	NA	1,2 Dichloroethane-D4 (SS)	95	% Recovery	1	NA		10/17/0
X00398	XG.2000.1206-6	NA	1,2 Dichloroethane-D4 (SS)	95	% Recovery	1	NA		10/17/0
X00398	XG.2000.1158-11	NA	4-Bromofluorobenzene (SS)	102	% Recovery	1	NA		10/17/0
X00398	XG.2000.1206-6	NA	4-Bromofluorobenzene (SS)	102	% Recovery	1	NA		10/17/0
X00398	XG.2000.1158-11	NA	Dibromofluoromethane (SS)	89	% Recovery	1	NA		10/17/0
X00398	XG.2000.1206-6	NA	Dibromofluoromethane (SS)	89	% Recovery	1	NA		10/17/0
X00398	XG.2000.1158-11	NA	Toluene-D8 (SS)	101	% Recovery	1	NA		10/17/0
X00398	XG.2000.1206-6	NA	Toluene-D8 (SS)	101	% Recovery	1	NA		10/17/0
X00403-006		DRO							
X00403	XG.2000.1139-6	NA	O-terphenyl	99	% Recovery	1	NA		10/13/0

QC Type **LCS** QC Matrix **WATER**

QC Group	Run Sequence	CAS #	Analyte	Result	Units	Dilution Factor	Detection Limit	Code	Run Date
X00388-004		8260							
X00388	XG.2000.1100-4	NA	1,2 Dichloroethane-D4 (SS)	87	% Recovery	1	NA		10/0
X00388	XG.2000.1100-4	NA	4-Bromofluorobenzene (SS)	99	% Recovery	1	NA		10/03
X00388	XG.2000.1100-4	NA	Dibromofluoromethane (SS)	100	% Recovery	1	NA		10/03/0
X00388	XG.2000.1100-4	NA	Toluene-D8 (SS)	101	% Recovery	1	NA		10/03/0
X00400-002		8270							
X00400	XG.2000.1153-2	NA	*2,4,6-TRIBROMOPHENOL	75	% Recovery	1	NA		10/16/0
X00400	XG.2000.1153-2	NA	*2-FLUOROBIPHENYL	82	% Recovery	1	NA		10/16/0
X00400	XG.2000.1153-2	NA	*2-FLUOROPHENOL	35	% Recovery	1	NA		10/16/0
X00400	XG.2000.1153-2	NA	*NITROBENZENE-D5	76	% Recovery	1	NA		10/16/0
X00400	XG.2000.1153-2	NA	*PHENOL-D6	26	% Recovery	1	NA		10/16/0
X00400	XG.2000.1153-2	NA	*TERPHENYL-D14	91	% Recovery	1	NA		10/16/0
X00404-002		DRO							
X00404	XG.2000.1139-18	NA	O-terphenyl	106	% Recovery	1	NA		10/14/0
X00405-002		GRO							
X00405	XG.2000.1141-11	NA	4-Bromofluorobenzene-FID	99	% Recovery	1	NA		10/16/0
X00405	XG.2000.1141-11	NA	4-Bromofluorobenzene-PID	ND	% Recovery	1	NA		10/16/0
X00405	XG.2000.1141-11	NA	aaa-Trifluorotoluene-FID	102	% Recovery	1	NA		10/16/0
X00405	XG.2000.1141-11	NA	aaa-Trifluorotoluene-PID	ND	% Recovery	1	NA		10/16/0

Surrogate Summary: QC

Client: CH2MHILL

ect: 0010135 KAFB ST 106

QC Type **LCSD** QC Matrix **WATER**

QC Group	Run Sequence	CAS #	Analyte	Result	Units	Dilution Factor	Detection Limit	Code	Run Date
X00388-005		8260							
X00388	XG.2000.1100-5	NA	1,2 Dichloroethane-D4 (SS)	86	% Recovery	1	NA		10/03/00
X00388	XG.2000.1100-5	NA	4-Bromofluorobenzene (SS)	99	% Recovery	1	NA		10/03/00
X00388	XG.2000.1100-5	NA	Dibromofluoromethane (SS)	100	% Recovery	1	NA		10/03/00
X00388	XG.2000.1100-5	NA	Toluene-D8 (SS)	101	% Recovery	1	NA		10/03/00
X00400-003		8270							
X00400	XG.2000.1153-3	NA	*2,4,6-TRIBROMOPHENOL	63	% Recovery	1	NA		10/16/00
X00400	XG.2000.1153-3	NA	*2-FLUOROBIPHENYL	78	% Recovery	1	NA		10/16/00
X00400	XG.2000.1153-3	NA	*2-FLUOROPHENOL	30	% Recovery	1	NA		10/16/00
X00400	XG.2000.1153-3	NA	*NITROBENZENE-D5	74	% Recovery	1	NA		10/16/00
X00400	XG.2000.1153-3	NA	*PHENOL-D6	23	% Recovery	1	NA		10/16/00
X00400	XG.2000.1153-3	NA	*TERPHENYL-D14	77	% Recovery	1	NA		10/16/00
X00404-003		DRO							
X00404	XG.2000.1139-19	NA	O-terphenyl	105	% Recovery	1	NA		10/14/00
X00405-003		GRO							
[illegible]05	XG.2000.1141-12	NA	4-Bromofluorobenzene-FID	99	% Recovery	1	NA		10/16/00
[illegible]5	XG.2000.1141-12	NA	4-Bromofluorobenzene-PID	ND	% Recovery	1	NA		10/16/00
X00405	XG.2000.1141-12	NA	aaa-Trifluorotoluene-FID	103	% Recovery	1	NA		10/16/00
X00405	XG.2000.1141-12	NA	aaa-Trifluorotoluene-PID	ND	% Recovery	1	NA		10/16/00

QC Type **MB** QC Matrix **WATER**

QC Group	Run Sequence	CAS #	Analyte	Result	Units	Dilution Factor	Detection Limit	Code	Run Date
X00388-001		8260							
X00388	XG.2000.1100-1	NA	1,2 Dichloroethane-D4 (SS)	92	% Recovery	1	NA		10/03/00
X00388	XG.2000.1100-1	NA	4-Bromofluorobenzene (SS)	99	% Recovery	1	NA		10/03/00
X00388	XG.2000.1100-1	NA	Dibromofluoromethane (SS)	100	% Recovery	1	NA		10/03/00
X00388	XG.2000.1100-1	NA	Toluene-D8 (SS)	101	% Recovery	1	NA		10/03/00
X00388-006		8260							
X00388	XG.2000.1100-6	NA	1,2 Dichloroethane-D4 (SS)	92	% Recovery	1	NA		10/04/00
X00388	XG.2000.1100-6	NA	4-Bromofluorobenzene (SS)	99	% Recovery	1	NA		10/04/00
X00388	XG.2000.1100-6	NA	Dibromofluoromethane (SS)	101	% Recovery	1	NA		10/04/00
X00388	XG.2000.1100-6	NA	Toluene-D8 (SS)	100	% Recovery	1	NA		10/04/00
X00388-013		8260							
X00388	XG.2000.1160-1	NA	1,2 Dichloroethane-D4 (SS)	90	% Recovery	1	NA		10/11/00
X00388	XG.2000.1160-1	NA	4-Bromofluorobenzene (SS)	99	% Recovery	1	NA		10/11/00
X00388	XG.2000.1160-1	NA	Dibromofluoromethane (SS)	100	% Recovery	1	NA		10/11/00
[illegible]8	XG.2000.1160-1	NA	Toluene-D8 (SS)	99	% Recovery	1	NA		10/11/00

Surrogate Summary: QC

Client: **CH2MHILL**

Project: **0010135** **KAFB ST 106**

X00388-016		**8260**						
X00388	XG.2000.1160-3	NA	1,2 Dichloroethane-D4 (SS)	92	% Recovery	1	NA	10/12/00
X00388	XG.2000.1160-3	NA	4-Bromofluorobenzene (SS)	99	% Recovery	1	NA	10/12/00
X00388	XG.2000.1160-3	NA	Dibromofluoromethane (SS)	99	% Recovery	1	NA	10/12/00
X00388	XG.2000.1160-3	NA	Toluene-D8 (SS)	101	% Recovery	1	NA	10/12/00
X00388-030		**8260**						
X00388	XG.2000.1160-13	NA	1,2 Dichloroethane-D4 (SS)	91	% Recovery	1	NA	10/13/00
X00388	XG.2000.1160-13	NA	4-Bromofluorobenzene (SS)	101	% Recovery	1	NA	10/13/00
X00388	XG.2000.1160-13	NA	Dibromofluoromethane (SS)	99	% Recovery	1	NA	10/13/00
X00388	XG.2000.1160-13	NA	Toluene-D8 (SS)	100	% Recovery	1	NA	10/13/00
X00388-033		**8260**						
X00388	XG.2000.1160-14	NA	1,2 Dichloroethane-D4 (SS)	90	% Recovery	1	NA	10/18/00
X00388	XG.2000.1160-14	NA	4-Bromofluorobenzene (SS)	99	% Recovery	1	NA	10/18/00
X00388	XG.2000.1160-14	NA	Dibromofluoromethane (SS)	98	% Recovery	1	NA	10/18/00
X00388	XG.2000.1160-14	NA	Toluene-D8 (SS)	99	% Recovery	1	NA	10/18/00
X00400-001		**8270**						
X00400	XG.2000.1153-1	NA	*2,4,6-TRIBROMOPHENOL	62	% Recovery	1	NA	10/16/00
X00400	XG.2000.1153-1	NA	*2-FLUOROBIPHENYL	76	% Recovery	1	NA	10/16/00
X00400	XG.2000.1153-1	NA	*2-FLUOROPHENOL	32	% Recovery	1	NA	10/16/00
X00400	XG.2000.1153-1	NA	*NITROBENZENE-D5	71	% Recovery	1	NA	10/16/00
X00400	XG.2000.1153-1	NA	*PHENOL-D6	24	% Recovery	1	NA	10/16/00
X00400	XG.2000.1153-1	NA	*TERPHENYL-D14	85	% Recovery	1	NA	10/1[illegible]
X00400-014		**8270**						
X00400	XG.2000.1146-4	NA	*2,4,6-TRIBROMOPHENOL	48	% Recovery	1	NA	10/16/00
X00400	XG.2000.1195-1	NA	*2,4,6-TRIBROMOPHENOL	48	% Recovery	1	NA	10/16/00
X00400	XG.2000.1146-4	NA	*2-FLUOROBIPHENYL	61	% Recovery	1	NA	10/16/00
X00400	XG.2000.1195-1	NA	*2-FLUOROBIPHENYL	61	% Recovery	1	NA	10/16/00
X00400	XG.2000.1146-4	NA	*2-FLUOROPHENOL	28	% Recovery	1	NA	10/16/00
X00400	XG.2000.1195-1	NA	*2-FLUOROPHENOL	28	% Recovery	1	NA	10/16/00
X00400	XG.2000.1146-4	NA	*NITROBENZENE-D5	62	% Recovery	1	NA	10/16/00
X00400	XG.2000.1195-1	NA	*NITROBENZENE-D5	62	% Recovery	1	NA	10/16/00
X00400	XG.2000.1146-4	NA	*PHENOL-D6	20	% Recovery	1	NA	10/16/00
X00400	XG.2000.1195-1	NA	*PHENOL-D6	20	% Recovery	1	NA	10/16/00
X00400	XG.2000.1146-4	NA	*TERPHENYL-D14	54	% Recovery	1	NA	10/16/00
X00400	XG.2000.1195-1	NA	*TERPHENYL-D14	54	% Recovery	1	NA	10/16/00
X00400-018		**8270**						
X00400	XG.2000.1187-2	NA	*2,4,6-TRIBROMOPHENOL	71	% Recovery	1	NA	10/23/00
X00400	XG.2000.1187-2	NA	*2-FLUOROBIPHENYL	79	% Recovery	1	NA	10/23/00
X00400	XG.2000.1187-2	NA	*2-FLUOROPHENOL	30	% Recovery	1	NA	10/23/00
X00400	XG.2000.1187-2	NA	*NITROBENZENE-D5	70	% Recovery	1	NA	10/23/00
X00400	XG.2000.1187-2	NA	*PHENOL-D6	22	% Recovery	1	NA	10/23/00
X00400	XG.2000.1187-2	NA	*TERPHENYL-D14	85	% Recovery	1	NA	10/23/00
X00400-022		**8270**						
X00400	XG.2000.1208-1	NA	*2,4,6-TRIBROMOPHENOL	85	% Recovery	1	NA	10/27/00
X00400	XG.2000.1208-1	NA	*2-FLUOROBIPHENYL	92	% Recovery	1	NA	10/27/00
X00400	XG.2000.1208-1	NA	*2-FLUOROPHENOL	47	% Recovery	1	NA	10/27[illegible]
X00400	XG.2000.1208-1	NA	*NITROBENZENE-D5	82	% Recovery	1	NA	10/27[illegible]

Surrogate Summary: QC

Client: CH2MHILL

Project: 0010135 KAFB ST 106

X00400	XG.2000 1208-1	NA	*PHENOL-D6	31	% Recovery	1	NA		10/27/00
X00400	XG.2000.1208-1	NA	*TERPHENYL-D14	107	% Recovery	1	NA		10/27/00
X00404-001		DRO							
X00404	XG.2000.1139-17	NA	O-terphenyl	84	% Recovery	1	NA		10/14/00
X00404-008		DRO							
X00404	XG.2000.1150-24	NA	O-terphenyl	87	% Recovery	1	NA		10/17/00
X00404-010		DRO							
X00404	XG.2000.1189-1	NA	O-terphenyl	80	% Recovery	1	NA		10/23/00
X00405-001		GRO							
X00405	XG.2000.1141-10	NA	4-Bromofluorobenzene-FID	88	% Recovery	1	NA		10/16/00
X00405	XG.2000.1141-10	NA	4-Bromofluorobenzene-PID	ND	% Recovery	1	NA		10/16/00
X00405	XG.2000.1141-10	NA	aaa-Trifluorotoluene-FID	96	% Recovery	1	NA		10/16/00
X00405	XG.2000.1141-10	NA	aaa-Trifluorotoluene-PID	ND	% Recovery	1	NA		10/16/00
X00405-008		GRO							
X00405	XG.2000.1161-9	NA	4-Bromofluorobenzene-FID	91	% Recovery	1	NA		10/19/00
X00405	XG.2000.1161-9	NA	4-Bromofluorobenzene-PID	ND	% Recovery	1	NA		10/19/00
X00405	XG.2000.1161-9	NA	aaa-Trifluorotoluene-FID	98	% Recovery	1	NA		10/19/00
X00405	XG.2000.1161-9	NA	aaa-Trifluorotoluene-PID	ND	% Recovery	1	NA		10/19/00
X00405-010		GRO							
X00405	XG.2000.1204-1	NA	4-Bromofluorobenzene-FID	92	% Recovery	1	NA		10/23/00
[illegible]05	XG.2000.1204-1	NA	4-Bromofluorobenzene-PID	ND	% Recovery	1	NA		10/23/00
[illegible]05	XG.2000.1204-1	NA	aaa-Trifluorotoluene-FID	99	% Recovery	1	NA		10/23/00
X00405	XG.2000.1204-1	NA	aaa-Trifluorotoluene-PID	ND	% Recovery	1	NA		10/23/00

QC Type **MS** QC Matrix **WATER**

QC Group	Run Sequence	CAS #	Analyte	Result	Units	Dilution Factor	Detection Limit	Code	Run Date
X00388-011		8260							
X00388	XG.2000.1100-11	NA	1,2 Dichloroethane-D4 (SS)	93	% Recovery	1	NA		10/04/00
X00388	XG.2000.1100-11	NA	4-Bromofluorobenzene (SS)	100	% Recovery	1	NA		10/04/00
X00388	XG.2000.1100-11	NA	Dibromofluoromethane (SS)	102	% Recovery	1	NA		10/04/00
X00388	XG.2000.1100-11	NA	Toluene-D8 (SS)	102	% Recovery	1	NA		10/04/00
X00400-016		8270							
X00400	XG.2000.1153-12	NA	*2,4,6-TRIBROMOPHENOL	20	% Recovery	1	NA		10/16/00
X00400	XG.2000.1153-12	NA	*2-FLUOROBIPHENYL	57	% Recovery	1	NA		10/16/00
X00400	XG.2000.1153-12	NA	*2-FLUOROPHENOL	23	% Recovery	1	NA		10/16/00
X00400	XG.2000.1153-12	NA	*NITROBENZENE-D5	52	% Recovery	1	NA		10/16/00
X00400	XG.2000.1153-12	NA	*PHENOL-D6	19	% Recovery	1	NA		10/16/00
X00400	XG.2000.1153-12	NA	*TERPHENYL-D14	50	% Recovery	1	NA		10/16/00
X00404-005		DRO							
X00404	XG.2000.1139-21	NA	O-terphenyl	106	% Recovery	1	NA		10/14/00
[illegible]405-005		GRO							
[illegible]05	XG.2000.1141-14	NA	4-Bromofluorobenzene-FID	98	% Recovery	1	NA		10/16/00

Surrogate Summary: QC

Client: CH2MHILL

Project: 0010135 KAFB ST 106

X00405	XG.2000.1141-14	NA	4-Bromofluorobenzene-PID	ND	% Recovery	1	NA		10/16/00
X00405	XG.2000.1141-14	NA	aaa-Trifluorotoluene-FID	102	% Recovery	1	NA		10/16/00
X00405	XG.2000.1141-14	NA	aaa-Trifluorotoluene-PID	ND	% Recovery	1	NA		10/16/00

QC Type **MSD** QC Matrix **WATER**

QC Group	Run Sequence	CAS #	Analyte	Result	Units	Dilution Factor	Detection Limit	Code	Run Date
X00388-012		8260							
X00388	XG.2000.1100-12	NA	1,2 Dichloroethane-D4 (SS)	93	% Recovery	1	NA		10/04/00
X00388	XG.2000.1100-12	NA	4-Bromofluorobenzene (SS)	98	% Recovery	1	NA		10/04/00
X00388	XG.2000.1100-12	NA	Dibromofluoromethane (SS)	101	% Recovery	1	NA		10/04/00
X00388	XG.2000.1100-12	NA	Toluene-D8 (SS)	100	% Recovery	1	NA		10/04/00
X00400-017		8270							
X00400	XG.2000.1153-13	NA	*2,4,6-TRIBROMOPHENOL	35	% Recovery	2	NA		10/16/00
X00400	XG.2000.1153-13	NA	*2-FLUOROBIPHENYL	72	% Recovery	2	NA		10/16/00
X00400	XG.2000.1153-13	NA	*2-FLUOROPHENOL	29	% Recovery	2	NA		10/16/00
X00400	XG.2000.1153-13	NA	*NITROBENZENE-D5	65	% Recovery	2	NA		10/16/00
X00400	XG.2000.1153-13	NA	*PHENOL-D6	22	% Recovery	2	NA		10/16/00
X00400	XG.2000.1153-13	NA	*TERPHENYL-D14	50	% Recovery	2	NA		10/16/00
X00404-006		DRO							
X00404	XG.2000.1139-22	NA	O-terphenyl	104	% Recovery	1	NA		10/14/
X00405-006		GRO							
X00405	XG.2000.1141-15	NA	4-Bromofluorobenzene-FID	98	% Recovery	1	NA		10/16/00
X00405	XG.2000.1141-15	NA	4-Bromofluorobenzene-PID	ND	% Recovery	1	NA		10/16/00
X00405	XG.2000.1141-15	NA	aaa-Trifluorotoluene-FID	103	% Recovery	1	NA		10/16/00
X00405	XG.2000.1141-15	NA	aaa-Trifluorotoluene-PID	ND	% Recovery	1	NA		10/16/00

Surrogate Summary: Fraction

Client: CH2MHILL
Project: 0010135 KAFB ST 106

Client Sample ID: **SB-27-5** Sample Matrix: **SOIL**

QC Group	Run Sequence	CAS #	Analyte	Result	Units	Dilution Factor	Detection Limit	Code	Run Date
0010135-01A		GRO							**X00385-024**
X00385	XG.2000.1141-2	NA	4-Bromofluorobenzene-FID	92	% Recovery	1	NA		10/14/00
X00385	XG.2000.1141-2	NA	4-Bromofluorobenzene-PID	ND	% Recovery	1	NA		10/14/00
X00385	XG.2000.1141-2	NA	aaa-Trifluorotoluene-FID	99	% Recovery	1	NA		10/14/00
X00385	XG.2000.1141-2	NA	aaa-Trifluorotoluene-PID	ND	% Recovery	1	NA		10/14/00
0010135-01A		DRO							**X00403-004**
X00403	XG.2000.1139-4	NA	O-terphenyl	86	% Recovery	1	NA		10/13/00

Client Sample ID: **SB-27-15'** Sample Matrix: **SOIL**

QC Group	Run Sequence	CAS #	Analyte	Result	Units	Dilution Factor	Detection Limit	Code	Run Date
0010135-02A		GRO							**X00385-032**
X00385	XG.2000.1141-9	NA	4-Bromofluorobenzene-FID	89	% Recovery	1	NA		10/16/00
[illegible]85	XG.2000.1141-9	NA	4-Bromofluorobenzene-PID	ND	% Recovery	1	NA		10/16/00
[illegible]85	XG.2000.1141-9	NA	aaa-Trifluorotoluene-FID	97	% Recovery	1	NA		10/16/00
X00385	XG.2000.1141-9	NA	aaa-Trifluorotoluene-PID	ND	% Recovery	1	NA		10/16/00
0010135-02A		DRO							**X00403-007**
X00403	XG.2000.1139-7	NA	O-terphenyl	86	% Recovery	1	NA		10/13/00

Client Sample ID: **SB-27-25'** Sample Matrix: **SOIL**

QC Group	Run Sequence	CAS #	Analyte	Result	Units	Dilution Factor	Detection Limit	Code	Run Date
0010135-03A		GRO							**X00385-026**
X00385	XG.2000.1141-3	NA	4-Bromofluorobenzene-FID	92	% Recovery	1	NA		10/14/00
X00385	XG.2000.1141-3	NA	4-Bromofluorobenzene-PID	ND	% Recovery	1	NA		10/14/00
X00385	XG.2000.1141-3	NA	aaa-Trifluorotoluene-FID	100	% Recovery	1	NA		10/14/00
X00385	XG.2000.1141-3	NA	aaa-Trifluorotoluene-PID	ND	% Recovery	1	NA		10/14/00
0010135-03A		DRO							**X00403-008**
X00403	XG.2000.1139-8	NA	O-terphenyl	85	% Recovery	1	NA		10/13/00

Surrogate Summary: Fraction

Client: CH2MHILL
Project: 0010135 KAFB ST 106

Client Sample ID **SB-27-35'** Sample Matrix **SOIL**

QC Group	Run Sequence	CAS #	Analyte	Result	Units	Dilution Factor	Detection Limit	Code	Run Date
0010135-04A		GRO							X00385-027
X00385	XG.2000.1141-4	NA	4-Bromofluorobenzene-FID	90	% Recovery	1	NA		10/14/00
X00385	XG.2000.1141-4	NA	4-Bromofluorobenzene-PID	ND	% Recovery	1	NA		10/14/00
X00385	XG.2000.1141-4	NA	aaa-Trifluorotoluene-FID	101	% Recovery	1	NA		10/14/00
X00385	XG.2000.1141-4	NA	aaa-Trifluorotoluene-PID	ND	% Recovery	1	NA		10/14/00
0010135-04A		DRO							X00403-009
X00403	XG.2000.1139-9	NA	O-terphenyl	86	% Recovery	1	NA		10/13/00
0010135-04B		BTEXALL							X00392-019
X00392	XG.2000.1156-6	NA	4-Bromofluorobenzene	101	% Recovery	1	NA		10/17/00
X00392	XG.2000.1156-6	NA	aaa-Trifluorotoluene	101	% Recovery	1	NA		10/17/00
X00392	XG.2000.1156-6	NA	Bromochloromethane	23	% Recovery	1	NA		10/17/00
X00392	XG.2000.1156-6	NA	Bromochloropropane	14	% Recovery	1	NA		10/17/00
X00392	XG.2000.1156-6	NA	Dichlorobutane	83	% Recovery	1	NA		10/17/00

Client Sample ID **SB-27-45'** Sample Matrix **SOIL**

QC Group	Run Sequence	CAS #	Analyte	Result	Units	Dilution Factor	Detection Limit	Code	Run Date
0010135-05A		GRO							X00385-028
X00385	XG.2000.1141-5	NA	4-Bromofluorobenzene-FID	90	% Recovery	1	NA		10/14/00
X00385	XG.2000.1141-5	NA	4-Bromofluorobenzene-PID	ND	% Recovery	1	NA		10/14/00
X00385	XG.2000.1141-5	NA	aaa-Trifluorotoluene-FID	100	% Recovery	1	NA		10/14/00
X00385	XG.2000.1141-5	NA	aaa-Trifluorotoluene-PID	ND	% Recovery	1	NA		10/14/00
0010135-05A		DRO							X00403-010
X00403	XG.2000.1139-10	NA	O-terphenyl	87	% Recovery	1	NA		10/13/00
0010135-05B		BTEXALL							X00392-020
X00392	XG.2000.1156-7	NA	4-Bromofluorobenzene	100	% Recovery	1	NA		10/17/00
X00392	XG.2000.1156-7	NA	aaa-Trifluorotoluene	102	% Recovery	1	NA		10/17/00
X00392	XG.2000.1156-7	NA	Bromochloromethane	35	% Recovery	1	NA		10/17/00
X00392	XG.2000.1156-7	NA	Bromochloropropane	70	% Recovery	1	NA		10/17/00
X00392	XG.2000.1156-7	NA	Dichlorobutane	48	% Recovery	1	NA		10/17/00

Client Sample ID **EQUIP RINSE** Sample Matrix **H2O**

QC Group	Run Sequence	CAS #	Analyte	Result	Units	Dilution Factor	Detection Limit	Code	Run Date
0010135-06A		DRO							X00404
X00404	XG.2000.1139-20	NA	O-terphenyl	91	% Recovery	1	NA		10/14

Surrogate Summary: Fraction

Client: CH2MHILL

Project: 0010135 KAFB ST 106

RECEIVED NOV - 7 2000

0010135-06A		GRO							X00405-004
X00405	XG.2000.1141-13	NA	4-Bromofluorobenzene-FID	87	% Recovery	1	NA		10/16/00
X00405	XG.2000.1141-13	NA	4-Bromofluorobenzene-PID	ND	% Recovery	1	NA		10/16/00
X00405	XG.2000.1141-13	NA	aaa-Trifluorotoluene-FID	96	% Recovery	1	NA		10/16/00
X00405	XG.2000.1141-13	NA	aaa-Trifluorotoluene-PID	ND	% Recovery	1	NA		10/16/00
0010135-06B		8260							X00388-037
X00388	XG.2000.1160-18	NA	1,2 Dichloroethane-D4 (SS)	99	% Recovery	1	NA		10/18/00
X00388	XG.2000.1160-18	NA	4-Bromofluorobenzene (SS)	103	% Recovery	1	NA		10/18/00
X00388	XG.2000.1160-18	NA	Dibromofluoromethane (SS)	101	% Recovery	1	NA		10/18/00
X00388	XG.2000.1160-18	NA	Toluene-D8 (SS)	100	% Recovery	1	NA		10/18/00
0010135-06C		8270							X00400-015
X00400	XG.2000.1153-11	NA	*2,4,6-TRIBROMOPHENOL	20	% Recovery	1	NA		10/16/00
X00400	XG.2000.1153-11	NA	*2-FLUOROBIPHENYL	82	% Recovery	1	NA		10/16/00
X00400	XG.2000.1153-11	NA	*2-FLUOROPHENOL	38	% Recovery	1	NA		10/16/00
X00400	XG.2000.1153-11	NA	*NITROBENZENE-D5	74	% Recovery	1	NA		10/16/00
X00400	XG.2000.1153-11	NA	*PHENOL-D6	29	% Recovery	1	NA		10/16/00
X00400	XG.2000.1153-11	NA	*TERPHENYL-D14	67	% Recovery	1	NA		10/16/00

Client Sample ID **SB-27-55'** Sample Matrix **SOIL**

QC Group	Run Sequence	CAS #	Analyte	Result	Units	Dilution Factor	Detection Limit	Code	Run Date
0010135-07A		GRO							X00385-029
X00385	XG.2000.1141-6	NA	4-Bromofluorobenzene-FID	93	% Recovery	1	NA		10/14/00
X00385	XG.2000.1141-6	NA	4-Bromofluorobenzene-PID	ND	% Recovery	1	NA		10/14/00
X00385	XG.2000.1141-6	NA	aaa-Trifluorotoluene-FID	99	% Recovery	1	NA		10/14/00
X00385	XG.2000.1141-6	NA	aaa-Trifluorotoluene-PID	ND	% Recovery	1	NA		10/14/00
0010135-07A		DRO							X00403-011
X00403	XG.2000.1139-11	NA	O-terphenyl	87	% Recovery	1	NA		10/13/00

Client Sample ID **TRIP BLANK** Sample Matrix **H2O**

QC Group	Run Sequence	CAS #	Analyte	Result	Units	Dilution Factor	Detection Limit	Code	Run Date
0010135-08A		8260							X00388-029
X00388	XG.2000.1160-12	NA	1,2 Dichloroethane-D4 (SS)	90	% Recovery	1	NA		10/13/00
X00388	XG.2000.1160-12	NA	4-Bromofluorobenzene (SS)	101	% Recovery	1	NA		10/13/00
X00388	XG.2000.1160-12	NA	Dibromofluoromethane (SS)	100	% Recovery	1	NA		10/13/00
X00388	XG.2000.1160-12	NA	Toluene-D8 (SS)	101	% Recovery	1	NA		10/13/00

Surrogate Summary: Fraction

Client: **CH2MHILL**

Project: **0010135** **KAFB ST 106**

Client Sample ID **SB-27-65** Sample Matrix **SOIL**

QC Group	Run Sequence	CAS #	Analyte	Result	Units	Dilution Factor	Detection Limit	Code	Run Date
0010135-09A		GRO							X00385-0:0
X00385	XG.2000.1141-7	NA	4-Bromofluorobenzene-FID	91	% Recovery	1	NA		10/14/00
X00385	XG.2000.1141-7	NA	4-Bromofluorobenzene-PID	ND	% Recovery	1	NA		10/14/00
X00385	XG.2000.1141-7	NA	aaa-Trifluorotoluene-FID	100	% Recovery	1	NA		10/14/00
X00385	XG.2000.1141-7	NA	aaa-Trifluorotoluene-PID	ND	% Recovery	1	NA		10/14/00
0010135-09A		DRO							X00403-0' 2
X00403	XG.2000.1139-12	NA	O-terphenyl	88	% Recovery	1	NA		10/13/00
0010135-09B		8260							X00398-0:2
X00398	XG.2000.1158-16	NA	1,2 Dichloroethane-D4 (SS)	97	% Recovery	1	NA		10/17/00
X00398	XG.2000.1158-16	NA	4-Bromofluorobenzene (SS)	101	% Recovery	1	NA		10/17/00
X00398	XG.2000.1158-16	NA	Dibromofluoromethane (SS)	91	% Recovery	1	NA		10/17/00
X00398	XG.2000.1158-16	NA	Toluene-D8 (SS)	100	% Recovery	1	NA		10/17/00
0010135-09C		8270							X00367-02 5
X00367	XG.2000.1146-2	NA	*2,4,6-TRIBROMOPHENOL	93	% Recovery	1	NA		10/16/00
X00367	XG.2000.1146-2	NA	*2-FLUOROBIPHENYL	82	% Recovery	1	NA		10/16/00
X00367	XG.2000.1146-2	NA	*2-FLUOROPHENOL	72	% Recovery	1	NA		10/16/
X00367	XG.2000.1146-2	NA	*NITROBENZENE-D5	76	% Recovery	1	NA		10/16/0
X00367	XG.2000.1146-2	NA	*PHENOL-D6	76	% Recovery	1	NA		10/16/00
X00367	XG.2000.1146-2	NA	*TERPHENYL-D14	98	% Recovery	1	NA		10/16/00

A[illegible]GAI ANALYTICAL LABORATORIES, INC.

Chain of Cust[illegible]dy Record

7300 JEFFERSON N.E.
ALBUQUERQUE, NEW MEXICO 871[illegible]
(505) 345-8964

3332 WEDGEWOOD
EL PASO, TEXAS 79925
(915) 593-6000

127 EASTGATE DRIVE, 212-C
LOS ALAMOS, NEW MEXICO 87544
(505) 662-2558

Lab job No.: 0010135 Date 10/12/00

Page 1 of 1

Client: CH2M HILL

Address: 6001 INDIAN SCHOOL RD NE #350

City / State / Zip: Albq NM 87110

Project Name / Number: KAFB, St 106

Contract / Purchase Order / Quote:

Project Manager / Contact: Bill L. / Amy H

Telephone No.: 884 5600

Fax No.: 883 7507

Samplers: (signature): [illegible]

Analysis Required

AAL Fraction Number	Field Sample Number / Location	Date	Time	Sample Type	Type / Size of Container	Preservation Temp.	Preservation Chemical	No. of Containers	GRO/DRO 8015	BTEX	VOC	SVOC						Remarks
01A	SB-27-5'	11/11	1735	Soil	4oz VOA	Ice	NO	1	X									24 hr TAT [illegible]
02A	SB-27-15'	11/12	0840					1	X									GRO/DRO
03A	SB-27-25'	11/12	0920					1	X									
04A,B	SB-27-35'	11/12	1005					2	X	X								
05A,B	SB-27-45'	11/12	1135					2	X	X								
06A,B,C	Equipment Rinse	11/12	1430	H_2O	1L + 40ml VOA			6	X		X	X						
07A	SB-27-55'	11/12	1556	Soil	4oz VOA			1	X									
08A	Trip Blank	11/12	–	H_2O	1 x 40ml VOA			1			X							
09A,B,C	SB-27-65'	11/12	1617	Soil					X		X	X						

Relinquished by:	Date	Received by:	Relinquished by:	Date	Received by:
Signature:		Signature:	Signature: [illegible]	11/12	Signature: [illegible]
Printed:	Time	Printed:	Printed: WM J LEFEVRE	Time 16:47	Printed: [illegible]
Company:		Company:	Company: CH2M HILL		Company: [illegible]
Reason:		Reason:	Reason: VFR to LAB		Reason: [illegible]

Method of Shipment:

Shipment No.

Special Instructions:

Comments: 0 ppm on VOC's per Bill Lefevre 10[illegible]

After analysis, samples are to be:

- ☐ Disposed of (additional fee)
- ☐ Stored (30 days max)
- ☐ Stored over 30 days (additional fee)
- ☐ Returned to customer

COURIER

ASSAIGAI
ANALYTICAL
LABORATORIES, INC.
7300 Jefferson, NE • Albuquerque, New Mexico 87109 • (505) 345-8964 • FAX (505) 345-7259
3332 Wedgewood Dr., Suite N • El Paso, Texas 79925 • (915) 593-6000 • FAX (915) 593-7820
127 Eastgate Drive, 212-C • Los Alamos, New Mexico 87544 • (505) 662-2555

RECEIVED NOV - 8 2000

Explanation of codes

B	*analyte detected in Method Blank*
E	*result is estimated*
H	*analyzed out of hold time*
N	*tentatively identified compound*
S	*subcontracted*
1-9	*see footnote*

CH2M HILL
attn: **SHARON MINCHAK**
6001 INDIAN SCHOOL RD NE STE 350
ALBUQUERQUE, NM 87110-4140

Assaigai Analytical Laboratories, Inc.

Certificate of Analysis

Client: **CH2M HILL**
Project: **0010176 KAFB**

William P. Biava: President of Assaigai Analytical Laboratories, Inc.

Client Sample ID ***SB-27-75'*** Sample Matrix ***SOIL*** Sample Collected ***10/12/00 16:15:00***

roup	Run Sequence	CAS #	Analyte	Result	Units	Dilution Factor	Detection Limit	Code	Run Date
0010176-01A		**SW846 5030A/8015A GRO by GC/FID**							
X00408	XG.2000.1161-7		Gasoline Range Organics	0.31	mg / Kg	1	0.25		10/18/00
0010176-01A		**SW846 ME/8015A Diesel Range Organics by GC/FID**							
X00407	XG.2000.1150-27		Diesel Range Organics	ND	mg / Kg	1	25		10/17/00

Client Sample ID ***SB-27-85'*** Sample Matrix ***SOIL*** Sample Collected ***10/12/00 17:35:00***

QC Group	Run Sequence	CAS #	Analyte	Result	Units	Dilution Factor	Detection Limit	Code	Run Date
0010176-02A		**SW846 5030A/8015A GRO by GC/FID**							
X00408	XG.2000.1161-8		Gasoline Range Organics	ND	mg / Kg	1	0.25		10/18/00
0010176-02A		**SW846 ME/8015A Diesel Range Organics by GC/FID**							
X00407	XG.2000.1150-28		Diesel Range Organics	ND	mg / Kg	1	25		10/17/00

Member:
American Council of
Independent Laboratories, Inc.

REPRODUCTION OF THIS REPORT IN LESS THAN FULL REQUIRES THE WRITTEN CONSENT OF AAL
THIS REPORT MAY NOT BE USED IN ANY MANNER BY THE CLIENT OR ANY OTHER THIRD PARTY TO CLAIM
PRODUCT ENDORSEMENT BY ANY ACCREDITATION PROGRAM

Certificate of Analysis

Client: **CH2M HILL**

Project: **0010176** **KAFB**

**** Sample specific Detection Limit is determined by multiplying the sample Dilution Factor by the listed Reporting Detection Limit. ****

**** ND = Not detected: less than the sample specific Detection Limit. Results relate only to the items tested. ****

Assaigai Analytical Laboratories, Inc.

Quality Control Summary

Client: CH2MHILL

Project: 0010176 KAFB

Explanation of codes

D	*Not applicable due to sample dilution*
L	*Not applicable due to MDL proximity*

QC Type **LCS: Lab Control Spike** QC Matrix **SOLID**

QC Group	Run Sequence	CAS #	Analyte	Result	Units	Dilution Factor	Detection Limit	Code	Run Date
X00407-002		**SW846 ME/8015A Diesel Range Organics by GC/FID**							
X00407	XG.2000.1150-10		Diesel Range Organics	100	% Recovery	1	NA		10/17/00
X00408-002		**SW846 5030A/8015A GRO by GC/FID**							
X00408	XG.2000.1155-2		Gasoline Range Organics	95	% Recovery	1	NA		10/16/00

QC Type **LCSD: Lab Control Spike Duplicate Accuracy** QC Matrix **SOLID**

QC Group	Run Sequence	CAS #	Analyte	Result	Units	Dilution Factor	Detection Limit	Code	Run Date
X00407-003		**SW846 ME/8015A Diesel Range Organics by GC/FID**							
X00407	XG.2000.1150-11		Diesel Range Organics	103	% Recovery	1	NA		10/17/00
X00408-003		**SW846 5030A/8015A GRO by GC/FID**							
X00408	XG.2000.1155-3		Gasoline Range Organics	94	% Recovery	1	NA		10/16/00

Type **LCSD: Lab Control Spike Duplicate Precision** QC Matrix **SOLID**

QC Group	Run Sequence	CAS #	Analyte	Result	Units	Dilution Factor	Detection Limit	Code	Run Date
X00407-003		**SW846 ME/8015A Diesel Range Organics by GC/FID**							
X00407	XG.2000.1150-11		Diesel Range Organics	3	RPD	1	NA		10/17/00
X00408-003		**SW846 5030A/8015A GRO by GC/FID**							
X00408	XG.2000.1155-3		Gasoline Range Organics	< 1	RPD	1	NA		10/16/00

QC Type **MB: Method Blank** QC Matrix **SOLID**

QC Group	Run Sequence	CAS #	Analyte	Result	Units	Dilution Factor	Detection Limit	Code	Run Date
X00407-001		**SW846 ME/8015A Diesel Range Organics by GC/FID**							
X00407	XG.2000.1150-9		Diesel Range Organics	ND	mg / Kg	1	25		10/16/00
X00407-014		**SW846 ME/8015A Diesel Range Organics by GC/FID**							
X00407	XG.2000.1150-26		Diesel Range Organics	ND	mg / Kg	1	25		10/17/00
X00408-001		**SW846 5030A/8015A GRO by GC/FID**							
X00408	XG.2000.1155-1		Gasoline Range Organics	ND	mg / Kg	1	0.25		10/16/00
X00408-026		**SW846 5030A/8015A GRO by GC/FID**							
[illegible]08	XG.2000.1161-1		Gasoline Range Organics	ND	mg / Kg	1	0.25		10/18/00

Quality Control Summary

Client: **CH2MHILL**

Project: **0010176** **KAFB**

Explanation of codes

D *Not applicable due to sample dilu*

L *Not applicable due to MDL proxim*

QC Type **MS: Matrix Spike** QC Matrix **SOLID**

QC Group	Run Sequence	CAS #	Analyte	Result	Units	Dilution Factor	Detection Limit	Code	Run Date
X00407-005		**SW846 ME/8015A Diesel Range Organics by GC/FID**							
X00407	XG.2000.1150-13		Diesel Range Organics	110	% Recovery	1	NA		10/17/00
X00408-023		**SW846 5030A/8015A GRO by GC/FID**							
X00408	XG.2000.1155-15		Gasoline Range Organics	90	% Recovery	1	NA		10/17/00

QC Type **MSD: Matrix Spike Duplicate Accuracy** QC Matrix **SOLID**

QC Group	Run Sequence	CAS #	Analyte	Result	Units	Dilution Factor	Detection Limit	Code	Run Date
X00407-006		**SW846 ME/8015A Diesel Range Organics by GC/FID**							
X00407	XG.2000.1150-14		Diesel Range Organics	108	% Recovery	1	NA		10/17/00
X00408-024		**SW846 5030A/8015A GRO by GC/FID**							
X00408	XG.2000.1155-16		Gasoline Range Organics	108	% Recovery	1	NA		10/17/00

QC Type **MSD: Matrix Spike Duplicate Precision** QC Matrix **SOLID**

QC Group	Run Sequence	CAS #	Analyte	Result	Units	Dilution Factor	Detection Limit	Code	Run Date
X00407-006		**SW846 ME/8015A Diesel Range Organics by GC/FID**							
X00407	XG.2000.1150-14		Diesel Range Organics	2	RPD	1	NA		10/17/00
X00408-024		**SW846 5030A/8015A GRO by GC/FID**							
X00408	XG.2000.1155-16		Gasoline Range Organics	18	RPD	1	NA		10/17/00

Assaigai Analytical Laboratories, Inc.

Surrogate Summary: QC

Client: CH2MHILL

Project: 0010176 KAFB

QC Type: **LCS** QC Matrix: **SOLID**

QC Group	Run Sequence	CAS #	Analyte	Result	Units	Dilution Factor	Detection Limit	Code	Run Date
X00407-002		DRO							
X00407	XG.2000.1150-10	NA	O-terphenyl	101	% Recovery	1	NA		10/17/00
X00408-002		GRO							
X00408	XG.2000.1155-2	NA	4-Bromofluorobenzene-FID	102	% Recovery	1	NA		10/16/00
X00408	XG.2000.1155-2	NA	4-Bromofluorobenzene-PID	ND	% Recovery	1	NA		10/16/00
X00408	XG.2000.1155-2	NA	aaa-Trifluorotoluene-FID	105	% Recovery	1	NA		10/16/00
X00408	XG.2000.1155-2	NA	aaa-Trifluorotoluene-PID	ND	% Recovery	1	NA		10/16/00

QC Type: **LCSD** QC Matrix: **SOLID**

QC Group	Run Sequence	CAS #	Analyte	Result	Units	Dilution Factor	Detection Limit	Code	Run Date
X00407-003		DRO							
X00407	XG.2000.1150-11	NA	O-terphenyl	102	% Recovery	1	NA		10/17/00
X00408-003		GRO							
X00408	XG.2000.1155-3	NA	4-Bromofluorobenzene-FID	102	% Recovery	1	NA		10/16/00
X00408	XG.2000.1155-3	NA	4-Bromofluorobenzene-PID	ND	% Recovery	1	NA		10/16/00
X00408	XG.2000.1155-3	NA	aaa-Trifluorotoluene-FID	104	% Recovery	1	NA		10/16/00
X00408	XG.2000.1155-3	NA	aaa-Trifluorotoluene-PID	ND	% Recovery	1	NA		10/16/00

QC Type: **MB** QC Matrix: **SOLID**

QC Group	Run Sequence	CAS #	Analyte	Result	Units	Dilution Factor	Detection Limit	Code	Run Date
X00407-001		DRO							
X00407	XG.2000.1150-9	NA	O-terphenyl	87	% Recovery	1	NA		10/16/00
X00407-014		DRO							
X00407	XG.2000.1150-26	NA	O-terphenyl	88	% Recovery	1	NA		10/17/00
X00408-001		GRO							
X00408	XG.2000.1155-1	NA	4-Bromofluorobenzene-FID	91	% Recovery	1	NA		10/16/00
X00408	XG.2000.1155-1	NA	4-Bromofluorobenzene-PID	ND	% Recovery	1	NA		10/16/00
X00408	XG.2000.1155-1	NA	aaa-Trifluorotoluene-FID	99	% Recovery	1	NA		10/16/00
X00408	XG.2000.1155-1	NA	aaa-Trifluorotoluene-PID	ND	% Recovery	1	NA		10/16/00
X00408-026		GRO							
X00408	XG.2000.1161-1	NA	4-Bromofluorobenzene-FID	92	% Recovery	1	NA		10/18/00
X00408	XG.2000.1161-1	NA	4-Bromofluorobenzene-PID	ND	% Recovery	1	NA		10/18/00
X00408	XG.2000.1161-1	NA	aaa-Trifluorotoluene-FID	97	% Recovery	1	NA		10/18/00
X00408	XG.2000.1161-1	NA	aaa-Trifluorotoluene-PID	ND	% Recovery	1	NA		10/18/00

Surrogate Summary: QC

Client: **CH2MHILL**
Project: **0010176** **KAFB**

QC Type **MS** QC Matrix **SOLID**

QC Group	Run Sequence	CAS #	Analyte	Result	Units	Dilution Factor	Detection Limit	Code	Run Date
X00407-005		DRO							
X00407	XG.2000.1150-13	NA	O-terphenyl	102	% Recovery	1	NA		10/17/0(
X00408-023		GRO							
X00408	XG.2000.1155-15	NA	4-Bromofluorobenzene-FID	95	% Recovery	1	NA		10/17/0(
X00408	XG.2000.1155-15	NA	4-Bromofluorobenzene-PID	ND	% Recovery	1	NA		10/17/0(
X00408	XG.2000.1155-15	NA	aaa-Trifluorotoluene-FID	99	% Recovery	1	NA		10/17/0(
X00408	XG.2000.1155-15	NA	aaa-Trifluorotoluene-PID	ND	% Recovery	1	NA		10/17/0(

QC Type **MSD** QC Matrix **SOLID**

QC Group	Run Sequence	CAS #	Analyte	Result	Units	Dilution Factor	Detection Limit	Code	Run Date
X00407-006		DRO							
X00407	XG.2000.1150-14	NA	O-terphenyl	100	% Recovery	1	NA		10/17/0(
X00408-024		GRO							
X00408	XG.2000.1155-16	NA	4-Bromofluorobenzene-FID	103	% Recovery	1	NA		10/17/00
X00408	XG.2000.1155-16	NA	4-Bromofluorobenzene-PID	ND	% Recovery	1	NA		10/17/00
X00408	XG.2000.1155-16	NA	aaa-Trifluorotoluene-FID	103	% Recovery	1	NA		10/17/00
X00408	XG.2000.1155-16	NA	aaa-Trifluorotoluene-PID	ND	% Recovery	1	NA		10/17/00

Surrogate Summary: Fraction

Client: **CH2MHILL**
ect: **0010176 KAFB**

Client Sample ID **SB-27-75'** Sample Matrix **SOIL**

QC Group	Run Sequence	CAS #	Analyte	Result	Units	Dilution Factor	Detection Limit	Code	Run Date
0010176-01A		DRO							**X00407-015**
X00407	XG.2000.1150-27	NA	O-terphenyl	88	% Recovery	1	NA		10/17/00
0010176-01A		GRO							**X00408-032**
X00408	XG.2000.1161-7	NA	4-Bromofluorobenzene-FID	102	% Recovery	1	NA		10/18/00
X00408	XG.2000.1161-7	NA	4-Bromofluorobenzene-PID	38	% Recovery	1	NA		10/18/00
X00408	XG.2000.1161-7	NA	aaa-Trifluorotoluene-FID	101	% Recovery	1	NA		10/18/00
X00408	XG.2000.1161-7	NA	aaa-Trifluorotoluene-PID	5	% Recovery	1	NA		10/18/00

Client Sample ID **SB-27-85'** Sample Matrix **SOIL**

QC Group	Run Sequence	CAS #	Analyte	Result	Units	Dilution Factor	Detection Limit	Code	Run Date
0010176-02A		DRO							**X00407-016**
X00407	XG.2000.1150-28	NA	O-terphenyl	86	% Recovery	1	NA		10/17/00
176-02A		GRO							**X00408-033**
J8	XG.2000.1161-8	NA	4-Bromofluorobenzene-FID	93	% Recovery	1	NA		10/18/00
X00408	XG.2000.1161-8	NA	4-Bromofluorobenzene-PID	ND	% Recovery	1	NA		10/18/00
X00408	XG.2000.1161-8	NA	aaa-Trifluorotoluene-FID	97	% Recovery	1	NA		10/18/00
X00408	XG.2000.1161-8	NA	aaa-Trifluorotoluene-PID	ND	% Recovery	1	NA		10/18/00

A[illegible]IGAI ANALYTICAL LABORATORIES, INC.

Chang 10/17/00

Chain of Cust[illegible]dy Record

7300 JEFFERSON N.E.
ALBUQUERQUE, NEW MEXICO 87[illegible]
(505) 345-8964

3332 WEDGEWOOD
EL PASO, TEXAS 79925
(915) 593-6000

127 EASTGATE DRIVE, 212-C
LOS ALAMOS, NEW MEXICO 87544
(505) 662-2558

Lab job No.: 10176 Date _____

Page 1 of 1

Client CH2M-Hill

Address -on file-

City / State / Zip _____

Project Name / Number KAFB

Contract / Purchase Order / Quote _____

Project Manager / Contact Bill LeFevre

Telephone No. _____

Fax No. _____

Samplers: (signature) _____

Analysis Required

AAL Fraction Number	Field Sample Number / Location	Date	Time	Sample Type	Type / Size of Container	Preservation Temp	Preservation Chemical	No. of Containers	GRO/DRO										Remarks
01A	SB-27-75'	10/12/00	1615	Soil	1/2 oz VOA	—	—	1	X										
02A	SB-27-85'	10/12/00	1735	Soil	4 oz VOA	—	—	1	X										

Relinquished by:	Date / Time	Received by:	Relinquished by:	Date / Time	Received by:
Signature		Signature	Signature		Signature
Printed		Printed	Printed		Printed
Company		Company	Company		Company
Reason		Reason	Reason		Reason

Method of Shipment: _____

Shipment No. _____

Special Instructions: _____

Comments: samples received by E Smith on 10/13/00 @ 1643
these were not on the COC.

After analysis, samples are to be:

- ☐ Disposed of (additional fee)
- ☐ Stored (30 days max)
- ☐ Stored over 30 days (additional fee)
- ☐ Returned to customer

COURIER

ASSAIGAI
ANALYTICAL
LABORATORIES, INC.
7300 Jefferson, NE • Albuquerque, New Mexico 87109 • (505) 345-8964 • FAX (505) 345-7259
3332 Wedgewood Dr., Suite N • El Paso, Texas 79925 • (915) 593-6000 • FAX (915) 593-7820
127 Eastgate Drive, 212-C • Los Alamos, New Mexico 87544 • (505) 662-2558

RECEIVED NOV - 7 2000

Explanation of codes

B	*analyte detected in Method Blank*
E	*result is estimated*
H	*analyzed out of hold time*
N	*tentatively identified compound*
S	*subcontracted*
1-9	*see footnote*

CH2MHILL
attn: AMY HALLORAN
6001 INDIAN SCHOOL RD NE STE 350
ALBUQUERQUE, NM 87110-4140

Assaigai Analytical Laboratories, Inc.

Certificate of Analysis

Client: CH2MHILL
Project: 0010155 KAFB BULK FUEL FAC(ST106)

William P. Biava: President of Assaigai Analytical Laboratories Inc.

Client Sample ID ***SB-27-95'*** Sample Matrix ***SOIL*** Sample Collected ***10/13/00 07:45:00***

QC Group	Run Sequence	CAS #	Analyte	Result	Units	Dilution Factor	Detection Limit	Code	Run Date
0010155-01A		**SW846 5030A/8015A GRO by GC/FID**							
X00408	XG.2000.1155-4		Gasoline Range Organics	1.2	mg / Kg	1	0.25		10/16/00
0010155-01A		**SW846 ME/8015A Diesel Range Organics by GC/FID**							
X00403	XG.2000.1150-18		Diesel Range Organics	ND	mg / Kg	1	25		10/17/00

Client Sample ID ***SB-27-105'*** Sample Matrix ***SOIL*** Sample Collected ***10/13/00 08:50:00***

QC Group	Run Sequence	CAS #	Analyte	Result	Units	Dilution Factor	Detection Limit	Code	Run Date
0010155-02A		**SW846 5030A/8015A GRO by GC/FID**							
X00408	XG.2000.1155-5		Gasoline Range Organics	0.72	mg / Kg	1	0.25		10/16/00
0010155-02A		**SW846 ME/8015A Diesel Range Organics by GC/FID**							
X00403	XG.2000.1150-19		Diesel Range Organics	ND	mg / Kg	1	25		10/17/00

Member:
American Council of
Independent Laboratories, Inc.

REPRODUCTION OF THIS REPORT IN LESS THAN FULL REQUIRES THE WRITTEN CONSENT OF AAL.
THIS REPORT MAY NOT BE USED IN ANY MANNER BY THE CLIENT OR ANY OTHER THIRD PARTY TO CLAIM
PRODUCT ENDORSEMENT BY ANY ACCREDITATION PROGRAM.

Certificate of Analysis

Client: **CH2MHILL**

Project: **0010155** **KAFB BULK FUEL FAC(ST106)**

Client Sample ID: ***SB-27-125'*** Sample Matrix: ***SOIL*** Sample Collected: *10/13/00 10:04 00*

QC Group	Run Sequence	CAS #	Analyte	Result	Units	Dilution Factor	Detection Limit	Code	Run Date
0010155-03A		**SW846 5030A/8015A GRO by GC/FID**							
X00408	XG.2000.1161-2		Gasoline Range Organics	5600	mg / Kg	2000	0.25		10/18/00
0010155-03A		**SW846 ME/8015A Diesel Range Organics by GC/FID**							
X00403	XG.2000.1150-2		Diesel Range Organics	4100	mg / Kg	10	25		10/16/00
0010155-03B		**SW846 8260A Purgeable VOCs by GC/MS**							
X00398	XG.2000.1158-6	75-34-3	1,1 Dichloroethane	ND	mg / Kg	100	0.005	1	10/16/00
X00398	XG.2000.1158-6	75-34-3	1,1 Dichloroethene	ND	mg / Kg	100	0.005	1	10/16/00
X00398	XG.2000.1158-6	71-55-6	1,1,1 Trichloroethane	ND	mg / Kg	100	0.005	1	10/16/00
X00398	XG.2000.1158-19	630-20-6	1,1,1,2 Tetrachloroethane	ND	mg / Kg	1000	0.005	1	10/17/00
X00398	XG.2000.1158-19	79-00-5	1,1,2 Trichloroethane	ND	mg / Kg	1000	0.005	1	10/17/00
X00398	XG.2000.1158-6	79-34-5	1,1,2,2 Tetrachloroethane	ND	mg / Kg	100	0.005	1	10/16/00
X00398	XG.2000.1158-19	106-93-4	1,2 Dibromoethane (EDB)	7.0	mg / Kg	1000	0.005	1	10/17/00
X00398	XG.2000.1158-6	95-50-1	1,2 Dichlorobenzene	ND	mg / Kg	100	0.005	1	10/16/00
X00398	XG.2000.1173-1	107-06-2	1,2 Dichloroethane	ND	mg / Kg	100	0.005	1	10/16/[illegible]
X00398	XG.2000.1158-6	78-87-5	1,2 Dichloropropane	ND	mg / Kg	100	0.005	1	10/16[illegible]
X00398	XG.2000.1158-6	96-18-4	1,2,3 Trichloropropane	ND	mg / Kg	100	0.005	1	10/16/00
X00398	XG.2000.1158-6	95-63-6	1,2,4-Trimethylbenzene	74	mg / Kg	100	0.005	1	10/16/00
X00398	XG.2000.1158-6	541-73-1	1,3 Dichlorobenzene	ND	mg / Kg	100	0.005	1	10/16/00
X00398	XG.2000.1158-6	108-67-8	1,3,5-Trimethylbenzene	32	mg / Kg	100	0.005	1	10/16/00
X00398	XG.2000.1158-19	764-41-0	1,4 Dichloro-2-butene	ND	mg / Kg	1000	0.05	1	10/17/00
X00398	XG.2000.1158-6	106-46-7	1,4 Dichlorobenzene	ND	mg / Kg	100	0.005	1	10/16/00
X00398	XG.2000.1158-6	78-93-3	2-Butanone (MEK)	ND	mg / Kg	100	0.025	1	10/16/00
X00398	XG.2000.1158-6	110-75-8	2-Chloroethylvinylether	ND	mg / Kg	100	0.025	1	10/16/00
X00398	XG.2000.1158-19	591-78-6	2-Hexanone (MBK)	ND	mg / Kg	1000	0.025	1	10/17/00
X00398	XG.2000.1158-6	108-10-1	4-Methyl-2-pentanone (MIBK)	ND	mg / Kg	100	0.025	1	10/16/00
X00398	XG.2000.1158-6	67-64-1	Acetone	28	mg / Kg	100	0.05	1	10/16/00
X00398	XG.2000.1158-6	107-02-8	Acrolein	ND	mg / Kg	100	0.1	1	10/16/00
X00398	XG.2000.1158-6	107-13-1	Acrylonitrile	ND	mg / Kg	100	0.1	1	10/16/00
X00398	XG.2000.1158-6	71-43-2	Benzene	85	mg / Kg	100	0.005	1	10/16/00
X00398	XG.2000.1158-6	75-27-4	Bromodichloromethane	ND	mg / Kg	100	0.005	1	10/16/00
X00398	XG.2000.1158-19	75-25-2	Bromoform	ND	mg / Kg	1000	0.005	1	10/17/00
X00398	XG.2000.1158-6	74-83-9	Bromomethane	ND	mg / Kg	100	0.025	1	10/16/00
X00398	XG.2000.1158-6	75-15-0	Carbon disulfide	ND	mg / Kg	100	0.025	1	10/16/00
X00398	XG.2000.1158-6	56-23-5	Carbon tetrachloride	ND	mg / Kg	100	0.005	1	10/16/00
X00398	XG.2000.1158-19	108-90-7	Chlorobenzene	ND	mg / Kg	1000	0.005	1	10/17/00
X00398	XG.2000.1158-19	124-48-1	Chlorodibromomethane	ND	mg / Kg	1000	0.005	1	10/17/00
X00398	XG.2000.1158-6	75-00-3	Chloroethane	ND	mg / Kg	100	0.025	1	10/16/00
X00398	XG.2000.1158-6	67-66-3	Chloroform	ND	mg / Kg	100	0.005	1	10/16/00
X00398	XG.2000.1158-6	74-87-3	Chloromethane	ND	mg / Kg	100	0.025	1	10/16/00
X00398	XG.2000.1158-6	156-59-2	cis-1,2 dichloroethene	ND	mg / Kg	100	0.005	1	10/16[illegible]
X00398	XG.2000.1158-6	10061-01-5	cis-1,3 dichloropropene	ND	mg / Kg	100	0.005	1	10/16/[illegible]

Certificate of Analysis

Client: CH2MHILL

Project: 0010155 KAFB BULK FUEL FAC(ST106)

X00398	XG.2000.1158-6	74-95-3	Dibromomethane	ND	mg / Kg	100	0.005	1	10/16/00
X00398	XG.2000.1158-19	97-63-2	Ethyl methacrylate	ND	mg / Kg	1000	0.025	1	10/17/00
X00398	XG.2000.1158-19	100-41-4	Ethylbenzene	150	mg / Kg	1000	0.005	1	10/17/00
X00398	XG.2000.1158-6		Freon 113	ND	mg / Kg	100	0.025	1	10/16/00
X00398	XG.2000.1158-6	75-71-8	Freon 12	ND	mg / Kg	100	0.05	1	10/16/00
X00398	XG.2000.1158-6	74-88-4	Iodomethane	ND	mg / Kg	100	0.025	1	10/16/00
X00398	XG.2000.1158-6	1634-04-4	Methyl t-butyl ether (MTBE)	ND	mg / Kg	100	0.005	1	10/16/00
X00398	XG.2000.1158-6	75-09-2	Methylene chloride	ND	mg / Kg	100	0.05	1	10/16/00
X00398	XG.2000.1158-6	91-20-3	Naphthalene	18	mg / Kg	100	0.025	1	10/16/00
X00398	XG.2000.1158-19	95-47-6	o-Xylene	110	mg / Kg	1000	0.005	1	10/17/00
X00398	XG.2000.1158-19	108-38-3/106-42	p/m Xylenes	340	mg / Kg	1000	0.01	1	10/17/00
X00398	XG.2000.1158-19	100-42-5	Styrene	ND	mg / Kg	1000	0.005	1	10/17/00
X00398	XG.2000.1158-6	156-60-5	t-1,2 Dichloroethene	ND	mg / Kg	100	0.005	1	10/16/00
X00398	XG.2000.1158-19	10061-02-6	t-1,3 Dichloropropene	ND	mg / Kg	1000	0.005	1	10/17/00
X00398	XG.2000.1158-19	127-18-4	Tetrachloroethene	ND	mg / Kg	1000	0.005	1	10/17/00
X00398	XG.2000.1158-19	108-88-3	Toluene	810	mg / Kg	1000	0.005	1	10/17/00
X00398	XG.2000.1158-6	79-01-6	Trichloroethene	ND	mg / Kg	100	0.005	1	10/16/00
X00398	XG.2000.1158-6	75-69-4	Trichlorofluoromethane	ND	mg / Kg	100	0.025	1	10/16/00
X00398	XG.2000.1158-6	108-05-4	Vinyl acetate	ND	mg / Kg	100	0.025	1	10/16/00
X00398	XG.2000.1158-6	75-01-4	Vinyl chloride	ND	mg / Kg	100	0.025	1	10/16/00

Client Sample ID ***SPIKE (SB-27-125')*** Sample Matrix ***SOIL*** Sample Collected ***10/13/00 10:04:00***

QC Group	Run Sequence	CAS #	Analyte	Result	Units	Dilution Factor	Detection Limit	Code	Run Date
0010155-04A		**SW846 5030A/8015A GRO by GC/FID**							
X00408	XG.2000.1161-3		Gasoline Range Organics	7700	mg / Kg	2000	0.25	1	10/18/00
0010155-04A		**SW846 ME/8015A Diesel Range Organics by GC/FID**							
X00403	XG.2000.1150-3		Diesel Range Organics	5400	mg / Kg	10	25		10/16/00
0010155-04B		**SW846 8260A Purgeable VOCs by GC/MS**							
X00398	XG.2000.1158-7	75-34-3	1,1 Dichloroethane	ND	mg / Kg	100	0.005	1	10/16/00
X00398	XG.2000.1158-7	75-34-3	1,1 Dichloroethene	ND	mg / Kg	100	0.005	1	10/16/00
X00398	XG.2000.1158-7	71-55-6	1,1,1 Trichloroethane	ND	mg / Kg	100	0.005	1	10/16/00
X00398	XG.2000.1158-18	630-20-6	1,1,1,2 Tetrachloroethane	ND	mg / Kg	1000	0.005	1	10/17/00
X00398	XG.2000.1158-18	79-00-5	1,1,2 Trichloroethane	ND	mg / Kg	1000	0.005	1	10/17/00
X00398	XG.2000.1158-7	79-34-5	1,1,2,2 Tetrachloroethane	ND	mg / Kg	100	0.005	1	10/16/00
X00398	XG.2000.1158-18	106-93-4	1,2 Dibromoethane (EDB)	ND	mg / Kg	1000	0.005	1	10/17/00
X00398	XG.2000.1158-7	95-50-1	1,2 Dichlorobenzene	ND	mg / Kg	100	0.005	1	10/16/00
X00398	XG.2000.1173-2	107-06-2	1,2 Dichloroethane	ND	mg / Kg	100	0.005	1	10/16/00
X00398	XG.2000.1158-7	78-87-5	1,2 Dichloropropane	ND	mg / Kg	100	0.005	1	10/16/00
X00398	XG.2000.1158-7	96-18-4	1,2,3 Trichloropropane	ND	mg / Kg	100	0.005	1	10/16/00
X00398	XG.2000.1158-7	95-63-6	1,2,4-Trimethylbenzene	51	mg / Kg	100	0.005	1	10/16/00
X00398	XG.2000.1158-7	541-73-1	1,3 Dichlorobenzene	ND	mg / Kg	100	0.005	1	10/16/00
8	XG.2000.1158-7	108-67-8	1,3,5-Trimethylbenzene	21	mg / Kg	100	0.005	1	10/16/00

Certificate of Analysis

Client: CH2MHILL

Project: **0010155** **KAFB BULK FUEL FAC(ST106)**

X00398	XG.2000.1158-18	764-41-0	1,4 Dichloro-2-butene	ND	mg / Kg	1000	0.05	1	10/17/0(
X00398	XG.2000.1158-7	106-46-7	1,4 Dichlorobenzene	ND	mg / Kg	100	0.005	1	10/16/0(
X00398	XG.2000.1158-7	78-93-3	2-Butanone (MEK)	ND	mg / Kg	100	0.025	1	10/16/0(
X00398	XG.2000.1158-7	110-75-8	2-Chloroethylvinylether	ND	mg / Kg	100	0.025	1	10/16/0(
X00398	XG.2000.1158-18	591-78-6	2-Hexanone (MBK)	ND	mg / Kg	1000	0.025	1	10/17/0(
X00398	XG.2000.1158-7	108-10-1	4-Methyl-2-pentanone (MIBK)	ND	mg / Kg	100	0.025	1	10/16/0(
X00398	XG.2000.1158-7	67-64-1	Acetone	14	mg / Kg	100	0.05	1	10/16/0(
X00398	XG.2000.1158-7	107-02-8	Acrolein	ND	mg / Kg	100	0.1	1	10/16/0(
X00398	XG.2000.1158-7	107-13-1	Acrylonitrile	ND	mg / Kg	100	0.1	1	10/16/0(
X00398	XG.2000.1158-7	71-43-2	Benzene	18	mg / Kg	100	0.005	1	10/16/0(
X00398	XG.2000.1158-7	75-27-4	Bromodichloromethane	ND	mg / Kg	100	0.005	1	10/16/0(
X00398	XG.2000.1158-18	75-25-2	Bromoform	ND	mg / Kg	1000	0.005	1	10/17/0(
X00398	XG.2000.1158-7	74-83-9	Bromomethane	ND	mg / Kg	100	0.025	1	10/16/0(
X00398	XG.2000.1158-7	75-15-0	Carbon disulfide	ND	mg / Kg	100	0.025	1	10/16/0(
X00398	XG.2000.1158-7	56-23-5	Carbon tetrachloride	ND	mg / Kg	100	0.005	1	10/16/0(
X00398	XG.2000.1158-18	108-90-7	Chlorobenzene	ND	mg / Kg	1000	0.005	1	10/17/0(
X00398	XG.2000.1158-18	124-48-1	Chlorodibromomethane	ND	mg / Kg	1000	0.005	1	10/17/0(
X00398	XG.2000.1158-7	75-00-3	Chloroethane	ND	mg / Kg	100	0.025	1	10/16/0(
X00398	XG.2000.1158-7	67-66-3	Chloroform	ND	mg / Kg	100	0.005	1	10/16/0(
X00398	XG.2000.1158-7	74-87-3	Chloromethane	ND	mg / Kg	100	0.025	1	10/16/0(
X00398	XG.2000.1158-7	156-59-2	cis-1,2 dichloroethene	ND	mg / Kg	100	0.005	1	10/16/0(
X00398	XG.2000.1158-7	10061-01-5	cis-1,3 dichloropropene	ND	mg / Kg	100	0.005	1	10/16/0
X00398	XG.2000.1158-7	74-95-3	Dibromomethane	ND	mg / Kg	100	0.005	1	10/16.
X00398	XG.2000.1158-18	97-63-2	Ethyl methacrylate	ND	mg / Kg	1000	0.025	1	10/17/0(
X00398	XG.2000.1158-18	100-41-4	Ethylbenzene	80	mg / Kg	1000	0.005	1	10/17/0(
X00398	XG.2000.1158-7		Freon 113	ND	mg / Kg	100	0.025	1	10/16/0(
X00398	XG.2000.1158-7	75-71-8	Freon 12	ND	mg / Kg	100	0.05	1	10/16/0(
X00398	XG.2000.1158-7	74-88-4	Iodomethane	ND	mg / Kg	100	0.025	1	10/16/0(
X00398	XG.2000.1158-7	1634-04-4	Methyl t-butyl ether (MTBE)	ND	mg / Kg	100	0.005	1	10/16/0(
X00398	XG.2000.1158-7	75-09-2	Methylene chloride	ND	mg / Kg	100	0.05	1	10/16/0(
X00398	XG.2000.1158-7	91-20-3	Naphthalene	10	mg / Kg	100	0.025	1	10/16/0(
X00398	XG.2000.1158-18	95-47-6	o-Xylene	62	mg / Kg	1000	0.005	1	10/17/0(
X00398	XG.2000.1158-18	108-38-3/106-42	p/m Xylenes	180	mg / Kg	1000	0.01	1	10/17/0(
X00398	XG.2000.1158-18	100-42-5	Styrene	ND	mg / Kg	1000	0.005	1	10/17/0(
X00398	XG.2000.1158-7	156-60-5	t-1,2 Dichloroethene	ND	mg / Kg	100	0.005	1	10/16/0(
X00398	XG.2000.1158-18	10061-02-6	t-1,3 Dichloropropene	ND	mg / Kg	1000	0.005	1	10/17/0(
X00398	XG.2000.1158-18	127-18-4	Tetrachloroethene	ND	mg / Kg	1000	0.005	1	10/17/0(
X00398	XG.2000.1158-18	108-88-3	Toluene	360	mg / Kg	1000	0.005	1	10/17/0(
X00398	XG.2000.1158-7	79-01-6	Trichloroethene	ND	mg / Kg	100	0.005	1	10/16/0(
X00398	XG.2000.1158-7	75-69-4	Trichlorofluoromethane	ND	mg / Kg	100	0.025	1	10/16/0(
X00398	XG.2000.1158-7	108-05-4	Vinyl acetate	ND	mg / Kg	100	0.025	1	10/16/0(
X00398	XG.2000.1158-7	75-01-4	Vinyl chloride	ND	mg / Kg	100	0.025	1	10/16/0(

Certificate of Analysis

t: CH2MHILL

Project: 0010155 KAFB BULK FUEL FAC(ST106)

Client Sample ID: *SPIKE DUP (SB-27-125')* | Sample Matrix: *SOIL* | Sample Collected: *10/13/00 10:04:00*

QC Group	Run Sequence	CAS #	Analyte	Result	Units	Dilution Factor	Detection Limit	Code	Run Date
0010155-05A		**SW846 5030A/8015A GRO by GC/FID**							
X00408	XG.2000.1161-4		Gasoline Range Organics	4300	mg / Kg	2000	0.25		10/18/00
0010155-05A		**SW846 ME/8015A Diesel Range Organics by GC/FID**							
X00403	XG.2000.1150-4		Diesel Range Organics	3600	mg / Kg	10	25		10/16/00
0010155-05B		**SW846 8260A Purgeable VOCs by GC/MS**							
X00398	XG.2000.1158-8	75-34-3	1,1 Dichloroethane	ND	mg / Kg	100	0.005	1	10/16/00
X00398	XG.2000.1158-8	75-34-3	1,1 Dichloroethene	ND	mg / Kg	100	0.005	1	10/16/00
X00398	XG.2000.1158-8	71-55-6	1,1,1 Trichloroethane	ND	mg / Kg	100	0.005	1	10/16/00
X00398	XG.2000.1158-8	630-20-6	1,1,1,2 Tetrachloroethane	ND	mg / Kg	100	0.005	1	10/16/00
X00398	XG.2000.1158-8	79-00-5	1,1,2 Trichloroethane	ND	mg / Kg	100	0.005	1	10/16/00
X00398	XG.2000.1158-8	79-34-5	1,1,2,2 Tetrachloroethane	ND	mg / Kg	100	0.005	1	10/16/00
X00398	XG.2000.1158-8	106-93-4	1,2 Dibromoethane (EDB)	1.3	mg / Kg	100	0.005	1	10/16/00
X00398	XG.2000.1158-8	95-50-1	1,2 Dichlorobenzene	ND	mg / Kg	100	0.005	1	10/16/00
X00398	XG.2000.1158-8	107-06-2	1,2 Dichloroethane	ND	mg / Kg	100	0.005	1	10/16/00
[illegible]8	XG.2000.1158-8	78-87-5	1,2 Dichloropropane	ND	mg / Kg	100	0.005	1	10/16/00
X00398	XG.2000.1158-8	96-18-4	1,2,3 Trichloropropane	ND	mg / Kg	100	0.005	1	10/16/00
X00398	XG.2000.1158-8	95-63-6	1,2,4-Trimethylbenzene	45	mg / Kg	100	0.005	1	10/16/00
X00398	XG.2000.1158-8	541-73-1	1,3 Dichlorobenzene	ND	mg / Kg	100	0.005	1	10/16/00
X00398	XG.2000.1158-8	108-67-8	1,3,5-Trimethylbenzene	18	mg / Kg	100	0.005	1	10/16/00
X00398	XG.2000.1158-8	764-41-0	1,4 Dichloro-2-butene	ND	mg / Kg	100	0.05	1	10/16/00
X00398	XG.2000.1158-8	106-46-7	1,4 Dichlorobenzene	ND	mg / Kg	100	0.005	1	10/16/00
X00398	XG.2000.1158-8	78-93-3	2-Butanone (MEK)	ND	mg / Kg	100	0.025	1	10/16/00
X00398	XG.2000.1158-8	110-75-8	2-Chloroethylvinylether	ND	mg / Kg	100	0.025	1	10/16/00
X00398	XG.2000.1158-8	591-78-6	2-Hexanone (MBK)	ND	mg / Kg	100	0.025	1	10/16/00
X00398	XG.2000.1158-8	108-10-1	4-Methyl-2-pentanone (MIBK)	ND	mg / Kg	100	0.025	1	10/16/00
X00398	XG.2000.1158-8	67-64-1	Acetone	12	mg / Kg	100	0.05	1	10/16/00
X00398	XG.2000.1158-8	107-02-8	Acrolein	ND	mg / Kg	100	0.1	1	10/16/00
X00398	XG.2000.1158-8	107-13-1	Acrylonitrile	ND	mg / Kg	100	0.1	1	10/16/00
X00398	XG.2000.1158-8	71-43-2	Benzene	3.2	mg / Kg	100	0.005	1	10/16/00
X00398	XG.2000.1158-8	75-27-4	Bromodichloromethane	ND	mg / Kg	100	0.005	1	10/16/00
X00398	XG.2000.1158-8	75-25-2	Bromoform	ND	mg / Kg	100	0.005	1	10/16/00
X00398	XG.2000.1158-8	74-83-9	Bromomethane	ND	mg / Kg	100	0.025	1	10/16/00
X00398	XG.2000.1158-8	75-15-0	Carbon disulfide	ND	mg / Kg	100	0.025	1	10/16/00
X00398	XG.2000.1158-8	56-23-5	Carbon tetrachloride	ND	mg / Kg	100	0.005	1	10/16/00
X00398	XG.2000.1158-8	108-90-7	Chlorobenzene	ND	mg / Kg	100	0.005	1	10/16/00
X00398	XG.2000.1158-8	124-48-1	Chlorodibromomethane	ND	mg / Kg	100	0.005	1	10/16/00
X00398	XG.2000.1158-8	75-00-3	Chloroethane	ND	mg / Kg	100	0.025	1	10/16/00
X00398	XG.2000.1158-8	67-66-3	Chloroform	ND	mg / Kg	100	0.005	1	10/16/00
X00398	XG.2000.1158-8	74-87-3	Chloromethane	ND	mg / Kg	100	0.025	1	10/16/00
[illegible]98	XG.2000.1158-8	156-59-2	cis-1,2 dichloroethene	ND	mg / Kg	100	0.005	1	10/16/00
[illegible]98	XG.2000.1158-8	10061-01-5	cis-1,3 dichloropropene	ND	mg / Kg	100	0.005	1	10/16/00

Certificate of Analysis

Client: CH2MHILL

Project: 0010155 KAFB BULK FUEL FAC(ST106)

X00398	XG.2000.1158-8	74-95-3	Dibromomethane	ND	mg / Kg	100	0.005	1	10/16/0(
X00398	XG.2000.1158-8	97-63-2	Ethyl methacrylate	ND	mg / Kg	100	0.025	1	10/16/0(
X00398	XG.2000.1158-8	100-41-4	Ethylbenzene	48	mg / Kg	100	0.005	1	10/16/0(
X00398	XG.2000.1158-8		Freon 113	ND	mg / Kg	100	0.025	1	10/16/0(
X00398	XG.2000.1158-8	75-71-8	Freon 12	ND	mg / Kg	100	0.05	1	10/16/0(
X00398	XG.2000.1158-8	74-88-4	Iodomethane	ND	mg / Kg	100	0.025	1	10/16/0(
X00398	XG.2000.1158-8	1634-04-4	Methyl t-butyl ether (MTBE)	ND	mg / Kg	100	0.005	1	10/16/0(
X00398	XG.2000.1158-8	75-09-2	Methylene chloride	ND	mg / Kg	100	0.05	1	10/16/0(
X00398	XG.2000.1158-8	91-20-3	Naphthalene	9.4	mg / Kg	100	0.025	1	10/16/0(
X00398	XG.2000.1158-8	95-47-6	o-Xylene	40	mg / Kg	100	0.005	1	10/16/0(
X00398	XG.2000.1158-8	108-38-3/106-42	p/m Xylenes	120	mg / Kg	100	0.01	1	10/16/0(
X00398	XG.2000.1158-8	100-42-5	Styrene	ND	mg / Kg	100	0.005	1	10/16/0(
X00398	XG.2000.1158-8	156-60-5	t-1,2 Dichloroethene	ND	mg / Kg	100	0.005	1	10/16/0(
X00398	XG.2000.1159-1	10061-02-6	t-1,3 Dichloropropene	ND	mg / Kg	100	0.005	1	10/16/0(
X00398	XG.2000.1158-8	127-18-4	Tetrachloroethene	ND	mg / Kg	100	0.005	1	10/16/0(
X00398	XG.2000.1158-17	108-88-3	Toluene	120	mg / Kg	1000	0.005	1	10/17/0(
X00398	XG.2000.1158-8	79-01-6	Trichloroethene	ND	mg / Kg	100	0.005	1	10/16/0(
X00398	XG.2000.1158-8	75-69-4	Trichlorofluoromethane	ND	mg / Kg	100	0.025	1	10/16/0(
X00398	XG.2000.1158-8	108-05-4	Vinyl acetate	ND	mg / Kg	100	0.025	1	10/16/0(
X00398	XG.2000.1158-8	75-01-4	Vinyl chloride	ND	mg / Kg	100	0.025	1	10/16/0(

Client Sample ID: ***SB-27-145'*** Sample Matrix: ***SOIL*** Sample Collected: ***10/13/00 11:30:00***

QC Group	Run Sequence	CAS #	Analyte	Result	Units	Dilution Factor	Detection Limit	Code	Run Date
0010155-06A		**SW846 5030A/8015A GRO by GC/FID**							
X00408	XG.2000.1155-6		Gasoline Range Organics	ND	mg / Kg	1	0.25		10/16/0(
0010155-06A		**SW846 ME/8015A Diesel Range Organics by GC/FID**							
X00403	XG.2000.1150-5		Diesel Range Organics	ND	mg / Kg	1	25		10/16/0(
0010155-06B		**SW846 3550A/8270B SVOCs by GC/MS**							
X00406	XG.2000.1171-4	120-82-1	1,2,4-Trichlorobenzene	ND	mg / Kg	1	0.03		10/17/0(
X00406	XG.2000.1171-4	95-50-1	1,2-Dichlorobenzene	ND	mg / Kg	1	0.03		10/17/0(
X00406	XG.2000.1171-4	541-73-1	1,3-Dichlorobenzene	ND	mg / Kg	1	0.03		10/17/0(
X00406	XG.2000.1171-4	106-46-7	1,4-Dichlorobenzene	ND	mg / Kg	1	0.03		10/17/0(
X00406	XG.2000.1171-4	90-12-0	1-Methylnaphthalene	ND	mg / Kg	1	0.03		10/17/0(
X00406	XG.2000.1171-4	58-90-2	2,3,4,6-Tetrachlorophenol	ND	mg / Kg	1	1.5		10/17/0(
X00406	XG.2000.1171-4	95-95-4	2,4,5-Trichlorophenol	ND	mg / Kg	1	0.3		10/17/0(
X00406	XG.2000.1171-4	88-06-2	2,4,6-Trichlorophenol	ND	mg / Kg	1	0.3		10/17/0(
X00406	XG.2000.1171-4	120-83-2	2,4-Dichlorophenol	ND	mg / Kg	1	0.3		10/17/0(
X00406	XG.2000.1171-4	105-67-9	2,4-Dimethylphenol	ND	mg / Kg	1	0.03		10/17/0(
X00406	XG.2000.1171-4	51-28-5	2,4-Dinitrophenol	ND	mg / Kg	1	0.67		10/17/0(
X00406	XG.2000.1171-4	121-14-2	2,4-Dinitrotoluene	ND	mg / Kg	1	0.3		10/17/0(
X00406	XG.2000.1171-4	606-20-2	2,6-Dinitrotoluene	ND	mg / Kg	1	0.3		10/17/0(
X00406	XG.2000.1171-4	91-58-7	2-Chloronaphthalene	ND	mg / Kg	1	0.03		10/17

Certificate of Analysis

t: CH2MHILL

Project: **0010155** **KAFB BULK FUEL FAC(ST106)**

X00406	XG.2000.1171-4	95-57-8	2-Chlorophenol	ND	mg / Kg	1	0.03		10/17/00
X00406	XG.2000.1171-4	91-57-6	2-Methylnaphthalene	ND	mg / Kg	1	0.03		10/17/00
X00406	XG.2000.1171-4	95-48-7	2-Methylphenol	ND	mg / Kg	1	0.03		10/17/00
X00406	XG.2000.1171-4	88-74-4	2-Nitroaniline	ND	mg / Kg	1	0.3		10/17/00
X00406	XG.2000.1171-4	88-75-5	2-Nitrophenol	ND	mg / Kg	1	0.3		10/17/00
X00406	XG.2000.1171-4		3+4 Methylphenol	ND	mg / Kg	1	0.03		10/17/00
X00406	XG.2000.1171-4	91-94-1	3,3-Dichlorobenzidine	ND	mg / Kg	1	0.3		10/17/00
X00406	XG.2000.1171-4	99-09-2	3-Nitroaniline	ND	mg / Kg	1	0.3		10/17/00
X00406	XG.2000.1171-4	534-52-1	4,6-Dinitro-2-methylphenol	ND	mg / Kg	1	0.3		10/17/00
X00406	XG.2000.1171-4	101-55-3	4-Bromophenyl-phenylether	ND	mg / Kg	1	0.03		10/17/00
X00406	XG.2000.1171-4	59-50-7	4-Chloro-3-methylphenol	ND	mg / Kg	1	0.3		10/17/00
X00406	XG.2000.1171-4	106-47-8	4-Chloroaniline	ND	mg / Kg	1	0.3		10/17/00
X00406	XG.2000.1171-4	7005-72-3	4-Chlorophenyl-phenylether	ND	mg / Kg	1	0.03		10/17/00
X00406	XG.2000.1171-4	100-01-6	4-Nitroaniline	ND	mg / Kg	1	0.3		10/17/00
X00406	XG.2000.1171-4	100-02-7	4-Nitrophenol	ND	mg / Kg	1	0.6		10/17/00
X00406	XG.2000.1171-4	83-32-9	Acenaphthene	ND	mg / Kg	1	0.03		10/17/00
X00406	XG.2000.1171-4	208-96-8	Acenaphthylene	ND	mg / Kg	1	0.03		10/17/00
X00406	XG.2000.1171-4	62-53-3	Aniline	ND	mg / Kg	1	0.3		10/17/00
X00406	XG.2000.1171-4	120-12-7	Anthracene	ND	mg / Kg	1	0.03		10/17/00
X00406	XG.2000.1171-4		Azobenzene&1,2-Diphenylhydrazine	ND	mg / Kg	1	0.03		10/17/00
X00406	XG.2000.1171-4	56-55-3	Benzo (a) anthracene	ND	mg / Kg	1	0.03		10/17/00
[illegible]06	XG.2000.1171-4	50-32-8	Benzo(a)pyrene	ND	mg / Kg	1	0.03		10/17/00
[illegible]6	XG.2000.1171-4		Benzo(b & k)fluoranthene	ND	mg / Kg	1	0.03		10/17/00
X00406	XG.2000.1171-4	191-24-2	Benzo(g,h,i)perylene	ND	mg / Kg	1	0.3		10/17/00
X00406	XG.2000.1171-4	64-85-0	Benzoic acid	ND	mg / Kg	1	3		10/17/00
X00406	XG.2000.1171-4	100-51-6	Benzyl alcohol	ND	mg / Kg	1	1.5		10/17/00
X00406	XG.2000.1171-4	111-44-4	bis (2-Chloroethyl) ether	ND	mg / Kg	1	0.03		10/17/00
X00406	XG.2000.1171-4	111-91-1	bis(2-Chloroethoxy)methane	ND	mg / Kg	1	0.03		10/17/00
X00406	XG.2000.1171-4	108-60-1	bis(2-Chloroisopropyl)ether	ND	mg / Kg	1	0.03		10/17/00
X00406	XG.2000.1171-4	117-81-7	bis(2-Ethylhexyl)phthalate	ND	mg / Kg	1	0.3		10/17/00
X00406	XG.2000.1171-4	85-68-7	Butylbenzylphthalate	ND	mg / Kg	1	0.03		10/17/00
X00406	XG.2000.1171-4	218-01-9	Chrysene	ND	mg / Kg	1	0.03		10/17/00
X00406	XG.2000.1171-4	84-74-2	di-n-Butylphthalate	ND	mg / Kg	1	0.3		10/17/00
X00406	XG.2000.1171-4	117-84-0	di-n-Octylpthalate	ND	mg / Kg	1	0.3		10/17/00
X00406	XG.2000.1171-4	53-70-3	Dibenz(a,h)anthracene	ND	mg / Kg	1	0.3		10/17/00
X00406	XG.2000.1171-4	132-64-9	Dibenzofuran	ND	mg / Kg	1	0.03		10/17/00
X00406	XG.2000.1171-4	84-66-2	Diethylphthalate	ND	mg / Kg	1	0.03		10/17/00
X00406	XG.2000.1171-4	131-11-3	Dimethylphthalate	ND	mg / Kg	1	0.03		10/17/00
X00406	XG.2000.1171-4	206-44-0	Fluoranthene	ND	mg / Kg	1	0.03		10/17/00
X00406	XG.2000.1171-4	86737	Fluorene	ND	mg / Kg	1	0.03		10/17/00
X00406	XG.2000.1171-4	118-74-1	Hexachlorobenzene	ND	mg / Kg	1	0.03		10/17/00
X00406	XG.2000.1171-4	87-68-3	Hexachlorobutadiene	ND	mg / Kg	1	0.03		10/17/00
X00406	XG.2000.1171-4	77-47-4	Hexachlorocyclopentadiene	ND	mg / Kg	1	1.5		10/17/00
X00406	XG.2000.1171-4	67-72-1	Hexachloroethane	ND	mg / Kg	1	0.03		10/17/00
X00406	XG.2000.1171-4	193-39-5	Indeno(1,2,3-cd)pyrene	ND	mg / Kg	1	0.3		10/17/00
X00406	XG.2000.1171-4	78-59-1	Isophorone	ND	mg / Kg	1	0.03		10/17/00
X00406	XG.2000.1171-4	621-64-7	n-Nitroso-di-n-propylamine	ND	mg / Kg	1	0.03		10/17/00
[illegible]6	XG.2000.1171-4	62-75-9	n-Nitroso-dimethyl-amine	ND	mg / Kg	1	0.3		10/17/00

Certificate of Analysis

Client: CH2MHILL

Project: 0010155 KAFB BULK FUEL FAC(ST106)

X00406	XG.2000.1171-4	86-30-6	n-Nitrosodiphenylamine	ND	mg / Kg	1	0.03		10/17/00
X00406	XG.2000.1171-4	91-20-3	Naphthalene	ND	mg / Kg	1	0.03		10/17/00
X00406	XG.2000.1171-4	98-95-3	Nitrobenzene	ND	mg / Kg	1	0.03		10/17/00
X00406	XG.2000.1171-4	87-86-5	Pentachlorophenol	ND	mg / Kg	1	0.3		10/17/00
X00406	XG.2000.1171-4	85-01-8	Phenanthrene	ND	mg / Kg	1	0.03		10/17/00
X00406	XG.2000.1171-4	108-95-2	Phenol	ND	mg / Kg	1	0.3		10/17/00
X00406	XG.2000.1171-4	129-00-0	Pyrene	ND	mg / Kg	1	0.03		10/17/00
X00406	XG.2000.1171-4	110-86-1	Pyridine	ND	mg / Kg	1	0.3		10/17/00

Client Sample ID: ***SPIKE (SB-27-145')*** Sample Matrix: ***SOIL*** Sample Collected: ***10/13/00 11:30 00***

QC Group	Run Sequence	CAS #	Analyte	Result	Units	Dilution Factor	Detection Limit	Code	Run Date
0010155-07A		**SW846 3550A/8270B SVOCs by GC/MS**							
X00406	XG.2000.1171-5	120-82-1	1,2,4-Trichlorobenzene	2.4	mg / Kg	1	0.03	2	10/17/00
X00406	XG.2000.1171-5	95-50-1	1,2-Dichlorobenzene	ND	mg / Kg	1	0.03	2	10/17/00
X00406	XG.2000.1171-5	541-73-1	1,3-Dichlorobenzene	ND	mg / Kg	1	0.03	2	10/17/00
X00406	XG.2000.1171-5	106-46-7	1,4-Dichlorobenzene	2.4	mg / Kg	1	0.03	2	10/17/00
X00406	XG.2000.1171-5	90-12-0	1-Methylnaphthalene	ND	mg / Kg	1	0.03	2	10/17/00
X00406	XG.2000.1171-5	58-90-2	2,3,4,6-Tetrachlorophenol	ND	mg / Kg	1	1.5	2	10/17/00
X00406	XG.2000.1171-5	95-95-4	2,4,5-Trichlorophenol	ND	mg / Kg	1	0.3	2	10/17
X00406	XG.2000.1171-5	88-06-2	2,4,6-Trichlorophenol	ND	mg / Kg	1	0.3	2	10/17/00
X00406	XG.2000.1171-5	120-83-2	2,4-Dichlorophenol	ND	mg / Kg	1	0.3	2	10/17/00
X00406	XG.2000.1171-5	105-67-9	2,4-Dimethylphenol	ND	mg / Kg	1	0.03	2	10/17/00
X00406	XG.2000.1171-5	51-28-5	2,4-Dinitrophenol	ND	mg / Kg	1	0.67	2	10/17/00
X00406	XG.2000.1171-5	121-14-2	2,4-Dinitrotoluene	2.5	mg / Kg	1	0.3	2	10/17/00
X00406	XG.2000.1171-5	606-20-2	2,6-Dinitrotoluene	ND	mg / Kg	1	0.3	2	10/17/00
X00406	XG.2000.1171-5	91-58-7	2-Chloronaphthalene	ND	mg / Kg	1	0.03	2	10/17/00
X00406	XG.2000.1171-5	95-57-8	2-Chlorophenol	5.7	mg / Kg	1	0.03	2	10/17/00
X00406	XG.2000.1171-5	91-57-6	2-Methylnaphthalene	ND	mg / Kg	1	0.03	2	10/17/00
X00406	XG.2000.1171-5	95-48-7	2-Methylphenol	ND	mg / Kg	1	0.03	2	10/17/00
X00406	XG.2000.1171-5	88-74-4	2-Nitroaniline	ND	mg / Kg	1	0.3	2	10/17/00
X00406	XG.2000.1171-5	88-75-5	2-Nitrophenol	ND	mg / Kg	1	0.3	2	10/17/00
X00406	XG.2000.1171-5		3+4 Methylphenol	ND	mg / Kg	1	0.03	2	10/17/00
X00406	XG.2000.1171-5	91-94-1	3,3-Dichlorobenzidine	ND	mg / Kg	1	0.3	2	10/17/00
X00406	XG.2000.1171-5	99-09-2	3-Nitroaniline	ND	mg / Kg	1	0.3	2	10/17/00
X00406	XG.2000.1171-5	534-52-1	4,6-Dinitro-2-methylphenol	ND	mg / Kg	1	0.3	2	10/17/00
X00406	XG.2000.1171-5	101-55-3	4-Bromophenyl-phenylether	ND	mg / Kg	1	0.03	2	10/17/00
X00406	XG.2000.1171-5	59-50-7	4-Chloro-3-methylphenol	5.7	mg / Kg	1	0.3	2	10/17/00
X00406	XG.2000.1171-5	106-47-8	4-Chloroaniline	ND	mg / Kg	1	0.3	2	10/17/00
X00406	XG.2000.1171-5	7005-72-3	4-Chlorophenyl-phenylether	ND	mg / Kg	1	0.03	2	10/17/00
X00406	XG.2000.1171-5	100-01-6	4-Nitroaniline	ND	mg / Kg	1	0.3	2	10/17/00
X00406	XG.2000.1171-5	100-02-7	4-Nitrophenol	6.2	mg / Kg	1	0.6	2	10/17/00
X00406	XG.2000.1171-5	83-32-9	Acenaphthene	2.8	mg / Kg	1	0.03	2	10/17/00
X00406	XG.2000.1171-5	208-96-8	Acenaphthylene	ND	mg / Kg	1	0.03	2	10/17/00
X00406	XG.2000.1171-5	62-53-3	Aniline	ND	mg / Kg	1	0.3	2	10/17
X00406	XG.2000.1171-5	120-12-7	Anthracene	ND	mg / Kg	1	0.03	2	10/17

Certificate of Analysis

ıt: **CH2MHILL**

Project: **0010155** **KAFB BULK FUEL FAC(ST106)**

X00406	XG.2000.1171-5		Azobenzene&1,2-Diphenylhydrazine	ND	mg / Kg	1	0.03	2	10/17/00
X00406	XG.2000.1171-5	56-55-3	Benzo (a) anthracene	ND	mg / Kg	1	0.03	2	10/17/00
X00406	XG.2000.1171-5	50-32-8	Benzo(a)pyrene	ND	mg / Kg	1	0.03	2	10/17/00
X00406	XG.2000.1171-5		Benzo(b & k)fluoranthene	ND	mg / Kg	1	0.03	2	10/17/00
X00406	XG.2000.1171-5	191-24-2	Benzo(g,h,i)perylene	ND	mg / Kg	1	0.3	2	10/17/00
X00406	XG.2000.1171-5	64-85-0	Benzoic acid	ND	mg / Kg	1	3	2	10/17/00
X00406	XG.2000.1171-5	100-51-6	Benzyl alcohol	ND	mg / Kg	1	1.5	2	10/17/00
X00406	XG.2000.1171-5	111-44-4	bis (2-Chloroethyl) ether	ND	mg / Kg	1	0.03	2	10/17/00
X00406	XG.2000.1171-5	111-91-1	bis(2-Chloroethoxy)methane	ND	mg / Kg	1	0.03	2	10/17/00
X00406	XG.2000.1171-5	108-60-1	bis(2-Chloroisopropyl)ether	ND	mg / Kg	1	0.03	2	10/17/00
X00406	XG.2000.1171-5	117-81-7	bis(2-Ethylhexyl)phthalate	ND	mg / Kg	1	0.3	2	10/17/00
X00406	XG.2000.1171-5	85-68-7	Butylbenzylphthalate	ND	mg / Kg	1	0.03	2	10/17/00
X00406	XG.2000.1171-5	218-01-9	Chrysene	ND	mg / Kg	1	0.03	2	10/17/00
X00406	XG.2000.1171-5	84-74-2	di-n-Butylphthalate	ND	mg / Kg	1	0.3	2	10/17/00
X00406	XG.2000.1171-5	117-84-0	di-n-Octylpthalate	2.6	mg / Kg	1	0.3	2	10/17/00
X00406	XG.2000.1171-5	53-70-3	Dibenz(a,h)anthracene	ND	mg / Kg	1	0.3	2	10/17/00
X00406	XG.2000.1171-5	132-64-9	Dibenzofuran	ND	mg / Kg	1	0.03	2	10/17/00
X00406	XG.2000.1171-5	84-66-2	Diethylphthalate	ND	mg / Kg	1	0.03	2	10/17/00
X00406	XG.2000.1171-5	131-11-3	Dimethylphthalate	ND	mg / Kg	1	0.03	2	10/17/00
X00406	XG.2000.1171-5	206-44-0	Fluoranthene	ND	mg / Kg	1	0.03	2	10/17/00
X00406	XG.2000.1171-5	86737	Fluorene	ND	mg / Kg	1	0.03	2	10/17/00
[illegible]06	XG.2000.1171-5	118-74-1	Hexachlorobenzene	ND	mg / Kg	1	0.03	2	10/17/00
[illegible]6	XG.2000.1171-5	87-68-3	Hexachlorobutadiene	ND	mg / Kg	1	0.03	2	10/17/00
X00406	XG.2000.1171-5	77-47-4	Hexachlorocyclopentadiene	ND	mg / Kg	1	1.5	2	10/17/00
X00406	XG.2000.1171-5	67-72-1	Hexachloroethane	ND	mg / Kg	1	0.03	2	10/17/00
X00406	XG.2000.1171-5	193-39-5	Indeno(1,2,3-cd)pyrene	ND	mg / Kg	1	0.3	2	10/17/00
X00406	XG.2000.1171-5	78-59-1	Isophorone	ND	mg / Kg	1	0.03	2	10/17/00
X00406	XG.2000.1171-5	621-64-7	n-Nitroso-di-n-propylamine	2.6	mg / Kg	1	0.03	2	10/17/00
X00406	XG.2000.1171-5	62-75-9	n-Nitroso-dimethyl-amine	ND	mg / Kg	1	0.3	2	10/17/00
X00406	XG.2000.1171-5	86-30-6	n-Nitrosodiphenylamine	ND	mg / Kg	1	0.03	2	10/17/00
X00406	XG.2000.1171-5	91-20-3	Naphthalene	ND	mg / Kg	1	0.03	2	10/17/00
X00406	XG.2000.1171-5	98-95-3	Nitrobenzene	ND	mg / Kg	1	0.03	2	10/17/00
X00406	XG.2000.1171-5	87-86-5	Pentachlorophenol	5.6	mg / Kg	1	0.3	2	10/17/00
X00406	XG.2000.1171-5	85-01-8	Phenanthrene	ND	mg / Kg	1	0.03	2	10/17/00
X00406	XG.2000.1171-5	108-95-2	Phenol	5.6	mg / Kg	1	0.3	2	10/17/00
X00406	XG.2000.1171-5	129-00-0	Pyrene	3.0	mg / Kg	1	0.03	2	10/17/00
X00406	XG.2000.1171-5	110-86-1	Pyridine	ND	mg / Kg	1	0.3	2	10/17/00

Client Sample ID ***SPIKE DUP (SB-27-145')*** Sample Matrix ***SOIL*** Sample Collected ***10/13/00 11:30:00***

QC Group	Run Sequence	CAS #	Analyte	Result	Units	Dilution Factor	Detection Limit	Code	Run Date
0010155-08A		**SW846 3550A/8270B SVOCs by GC/MS**							
X00406	XG.2000.1171-6	120-82-1	1,2,4-Trichlorobenzene	2.4	mg / Kg	1	0.03	2	10/17/00
X00406	XG.2000.1171-6	95-50-1	1,2-Dichlorobenzene	ND	mg / Kg	1	0.03	2	10/17/00
[illegible]06	XG.2000.1171-6	541-73-1	1,3-Dichlorobenzene	ND	mg / Kg	1	0.03	2	10/17/00

Certificate of Analysis

Client: **CH2MHILL**

Project: **0010155** **KAFB BULK FUEL FAC(ST106)**

X00406	XG.2000.1171-6	106-46-7	1,4-Dichlorobenzene	2.3	mg / Kg	1	0.03	2	10/17/00
X00406	XG.2000.1171-6	90-12-0	1-Methylnaphthalene	ND	mg / Kg	1	0.03	2	10/17/00
X00406	XG.2000.1171-6	58-90-2	2,3,4,6-Tetrachlorophenol	ND	mg / Kg	1	1.5	2	10/17/00
X00406	XG.2000.1171-6	95-95-4	2,4,5-Trichlorophenol	ND	mg / Kg	1	0.3	2	10/17/00
X00406	XG.2000.1171-6	88-06-2	2,4,6-Trichlorophenol	ND	mg / Kg	1	0.3	2	10/17/00
X00406	XG.2000.1171-6	120-83-2	2,4-Dichlorophenol	ND	mg / Kg	1	0.3	2	10/17/00
X00406	XG.2000.1171-6	105-67-9	2,4-Dimethylphenol	ND	mg / Kg	1	0.03	2	10/17/00
X00406	XG.2000.1171-6	51-28-5	2,4-Dinitrophenol	ND	mg / Kg	1	0.67	2	10/17/00
X00406	XG.2000.1171-6	121-14-2	2,4-Dinitrotoluene	2.5	mg / Kg	1	0.3	2	10/17/00
X00406	XG.2000.1171-6	606-20-2	2,6-Dinitrotoluene	ND	mg / Kg	1	0.3	2	10/17/00
X00406	XG.2000.1171-6	91-58-7	2-Chloronaphthalene	ND	mg / Kg	1	0.03	2	10/17/00
X00406	XG.2000.1171-6	95-57-8	2-Chlorophenol	5.6	mg / Kg	1	0.03	2	10/17/00
X00406	XG.2000.1171-6	91-57-6	2-Methylnaphthalene	ND	mg / Kg	1	0.03	2	10/17/00
X00406	XG.2000.1171-6	95-48-7	2-Methylphenol	ND	mg / Kg	1	0.03	2	10/17/00
X00406	XG.2000.1171-6	88-74-4	2-Nitroaniline	ND	mg / Kg	1	0.3	2	10/17/00
X00406	XG.2000.1171-6	88-75-5	2-Nitrophenol	ND	mg / Kg	1	0.3	2	10/17/00
X00406	XG.2000.1171-6		3+4 Methylphenol	ND	mg / Kg	1	0.03	2	10/17/00
X00406	XG.2000.1171-6	91-94-1	3,3-Dichlorobenzidine	ND	mg / Kg	1	0.3	2	10/17/00
X00406	XG.2000.1171-6	99-09-2	3-Nitroaniline	ND	mg / Kg	1	0.3	2	10/17/00
X00406	XG.2000.1171-6	534-52-1	4,6-Dinitro-2-methylphenol	ND	mg / Kg	1	0.3	2	10/17/00
X00406	XG.2000.1171-6	101-55-3	4-Bromophenyl-phenylether	ND	mg / Kg	1	0.03	2	10/17/00
X00406	XG.2000.1171-6	59-50-7	4-Chloro-3-methylphenol	5.9	mg / Kg	1	0.3	2	10/17/00
X00406	XG.2000.1171-6	106-47-8	4-Chloroaniline	ND	mg / Kg	1	0.3	2	10/17
X00406	XG.2000.1171-6	7005-72-3	4-Chlorophenyl-phenylether	ND	mg / Kg	1	0.03	2	10/17/00
X00406	XG.2000.1171-6	100-01-6	4-Nitroaniline	ND	mg / Kg	1	0.3	2	10/17/00
X00406	XG.2000.1171-6	100-02-7	4-Nitrophenol	6.4	mg / Kg	1	0.6	2	10/17/00
X00406	XG.2000.1171-6	83-32-9	Acenaphthene	2.7	mg / Kg	1	0.03	2	10/17/00
X00406	XG.2000.1171-6	208-96-8	Acenaphthylene	ND	mg / Kg	1	0.03	2	10/17/00
X00406	XG.2000.1171-6	62-53-3	Aniline	ND	mg / Kg	1	0.3	2	10/17/00
X00406	XG.2000.1171-6	120-12-7	Anthracene	ND	mg / Kg	1	0.03	2	10/17/00
X00406	XG.2000.1171-6		Azobenzene&1,2-Diphenylhydrazine	ND	mg / Kg	1	0.03	2	10/17/00
X00406	XG.2000.1171-6	56-55-3	Benzo (a) anthracene	ND	mg / Kg	1	0.03	2	10/17/00
X00406	XG.2000.1171-6	50-32-8	Benzo(a)pyrene	ND	mg / Kg	1	0.03	2	10/17/00
X00406	XG.2000.1171-6		Benzo(b & k)fluoranthene	ND	mg / Kg	1	0.03	2	10/17/00
X00406	XG.2000.1171-6	191-24-2	Benzo(g,h,i)perylene	ND	mg / Kg	1	0.3	2	10/17/00
X00406	XG.2000.1171-6	64-85-0	Benzoic acid	ND	mg / Kg	1	3	2	10/17/00
X00406	XG.2000.1171-6	100-51-6	Benzyl alcohol	ND	mg / Kg	1	1.5	2	10/17/00
X00406	XG.2000.1171-6	111-44-4	bis (2-Chloroethyl) ether	ND	mg / Kg	1	0.03	2	10/17/00
X00406	XG.2000.1171-6	111-91-1	bis(2-Chloroethoxy)methane	ND	mg / Kg	1	0.03	2	10/17/00
X00406	XG.2000.1171-6	108-60-1	bis(2-Chloroisopropyl)ether	ND	mg / Kg	1	0.03	2	10/17/00
X00406	XG.2000.1171-6	117-81-7	bis(2-Ethylhexyl)phthalate	ND	mg / Kg	1	0.3	2	10/17/00
X00406	XG.2000.1171-6	85-68-7	Butylbenzylphthalate	ND	mg / Kg	1	0.03	2	10/17/00
X00406	XG.2000.1171-6	218-01-9	Chrysene	ND	mg / Kg	1	0.03	2	10/17/00
X00406	XG.2000.1171-6	84-74-2	di-n-Butylphthalate	ND	mg / Kg	1	0.3	2	10/17/00
X00406	XG.2000.1171-6	117-84-0	di-n-Octylpthalate	2.7	mg / Kg	1	0.3	2	10/17/00
X00406	XG.2000.1171-6	53-70-3	Dibenz(a,h)anthracene	ND	mg / Kg	1	0.3	2	10/17/00
X00406	XG.2000.1171-6	132-64-9	Dibenzofuran	ND	mg / Kg	1	0.03	2	10/17/00
X00406	XG.2000.1171-6	84-66-2	Diethylphthalate	ND	mg / Kg	1	0.03	2	10/17

Certificate of Analysis

:t: CH2MHILL
Project: 0010155 KAFB BULK FUEL FAC(ST106)

X00406	XG.2000.1171-6	131-11-3	Dimethylphthalate	ND	mg / Kg	1	0.03	2	10/17/00
X00406	XG.2000.1171-6	206-44-0	Fluoranthene	ND	mg / Kg	1	0.03	2	10/17/00
X00406	XG.2000.1171-6	86737	Fluorene	ND	mg / Kg	1	0.03	2	10/17/00
X00406	XG.2000.1171-6	118-74-1	Hexachlorobenzene	ND	mg / Kg	1	0.03	2	10/17/00
X00406	XG.2000.1171-6	87-68-3	Hexachlorobutadiene	ND	mg / Kg	1	0.03	2	10/17/00
X00406	XG.2000.1171-6	77-47-4	Hexachlorocyclopentadiene	ND	mg / Kg	1	1.5	2	10/17/00
X00406	XG.2000.1171-6	67-72-1	Hexachloroethane	ND	mg / Kg	1	0.03	2	10/17/00
X00406	XG.2000.1171-6	193-39-5	Indeno(1,2,3-cd)pyrene	ND	mg / Kg	1	0.3	2	10/17/00
X00406	XG.2000.1171-6	78-59-1	Isophorone	ND	mg / Kg	1	0.03	2	10/17/00
X00406	XG.2000.1171-6	621-64-7	n-Nitroso-di-n-propylamine	2.6	mg / Kg	1	0.03	2	10/17/00
X00406	XG.2000.1171-6	62-75-9	n-Nitroso-dimethyl-amine	ND	mg / Kg	1	0.3	2	10/17/00
X00406	XG.2000.1171-6	86-30-6	n-Nitrosodiphenylamine	ND	mg / Kg	1	0.03	2	10/17/00
X00406	XG.2000.1171-6	91-20-3	Naphthalene	ND	mg / Kg	1	0.03	2	10/17/00
X00406	XG.2000.1171-6	98-95-3	Nitrobenzene	ND	mg / Kg	1	0.03	2	10/17/00
X00406	XG.2000.1171-6	87-86-5	Pentachlorophenol	5.5	mg / Kg	1	0.3	2	10/17/00
X00406	XG.2000.1171-6	85-01-8	Phenanthrene	ND	mg / Kg	1	0.03	2	10/17/00
X00406	XG.2000.1171-6	108-95-2	Phenol	5.6	mg / Kg	1	0.3	2	10/17/00
X00406	XG.2000.1171-6	129-00-0	Pyrene	3.1	mg / Kg	1	0.03	2	10/17/00
X00406	XG.2000.1171-6	110-86-1	Pyridine	ND	mg / Kg	1	0.3	2	10/17/00

Client Sample ID ***SB-27-165'*** Sample Matrix ***SOIL*** Sample Collected ***10/13/00 12:50:00***

QC Group	Run Sequence	CAS #	Analyte	Result	Units	Dilution Factor	Detection Limit	Code	Run Date
0010155-09A		**SW846 5030A/8015A GRO by GC/FID**							
X00408	XG.2000.1155-7		Gasoline Range Organics	ND	mg / Kg	1	0.25		10/16/00
0010155-09A		**SW846 ME/8015A Diesel Range Organics by GC/FID**							
X00403	XG.2000.1150-6		Diesel Range Organics	ND	mg / Kg	1	25		10/16/00
0010155-09B		**SW846 5030A/8021B Purgeable VOCs by GC/PID**							
X00392	XG.2000.1156-8	71-43-2	Benzene	ND	mg / Kg	1	0.005		10/17/00
X00392	XG.2000.1156-8	100-41-4	Ethylbenzene	ND	mg / Kg	1	0.005		10/17/00
X00392	XG.2000.1156-8	95-47-6	o-Xylene	ND	mg / Kg	1	0.005		10/17/00
X00392	XG.2000.1156-8	108-38-3/106-42	p/m-Xylenes	ND	mg / Kg	1	0.01		10/17/00
X00392	XG.2000.1156-8	108-88-3	Toluene	ND	mg / Kg	1	0.005		10/17/00

Client Sample ID ***SB-27-185'*** Sample Matrix ***SOIL*** Sample Collected ***10/13/00 15:30:00***

QC Group	Run Sequence	CAS #	Analyte	Result	Units	Dilution Factor	Detection Limit	Code	Run Date
0010155-10A		**SW846 5030A/8015A GRO by GC/FID**							
X00408	XG.2000.1155-8		Gasoline Range Organics	0.49	mg / Kg	1	0.25	1	10/16/00

Certificate of Analysis

Client: **CH2MHILL**

Project: **0010155** **KAFB BULK FUEL FAC(ST106)**

0010155-10A **SW846 ME/8015A Diesel Range Organics by GC/FID**

X00403	XG.2000.1150-7		Diesel Range Organics	ND	mg / Kg	1	25		10/16/0C

0010155-10B **SW846 5030A/8021B Purgeable VOCs by GC/PID**

X00392	XG.2000.1156-9	71-43-2	Benzene	ND	mg / Kg	1	0.005	1	10/17/0C
X00392	XG.2000.1156-9	100-41-4	Ethylbenzene	ND	mg / Kg	1	0.005	1	10/17/0C
X00392	XG.2000.1156-9	95-47-6	o-Xylene	ND	mg / Kg	1	0.005	1	10/17/0C
X00392	XG.2000.1156-9	108-38-3/106-42	p/m-Xylenes	ND	mg / Kg	1	0.01	1	10/17/0C
X00392	XG.2000.1156-9	108-88-3	Toluene	ND	mg / Kg	1	0.005	1	10/17/0C

Client Sample ID ***SB-27-185'-DUP*** Sample Matrix ***SOIL*** Sample Collected ***10/13/00 15:30:00***

QC Group	Run Sequence	CAS #	Analyte	Result	Units	Dilution Factor	Detection Limit	Code	Run Date
0010155-11A		**SW846 5030A/8015A GRO by GC/FID**							
X00408	XG.2000.1155-9		Gasoline Range Organics	ND	mg / Kg	1	0.25	1	10/16/0C
0010155-11A		**SW846 ME/8015A Diesel Range Organics by GC/FID**							
X00403	XG.2000.1150-8		Diesel Range Organics	ND	mg / Kg	1	25		10/16/
0010155-11B		**SW846 5030A/8021B Purgeable VOCs by GC/PID**							
X00392	XG.2000.1156-10	71-43-2	Benzene	ND	mg / Kg	1	0.005	1	10/17/0C
X00392	XG.2000.1156-10	100-41-4	Ethylbenzene	ND	mg / Kg	1	0.005	1	10/17/0C
X00392	XG.2000.1156-10	95-47-6	o-Xylene	ND	mg / Kg	1	0.005	1	10/17/0C
X00392	XG.2000.1156-10	108-38-3/106-42	p/m-Xylenes	ND	mg / Kg	1	0.01	1	10/17/0C
X00392	XG.2000.1156-10	108-88-3	Toluene	ND	mg / Kg	1	0.005	1	10/17/0C

Client Sample ID ***TRIP*** Sample Matrix ***WATER*** Sample Collected ***10/13/00***

QC Group	Run Sequence	CAS #	Analyte	Result	Units	Dilution Factor	Detection Limit	Code	Run Date
0010155-13A		**SW846 8260A Purgeable VOCs by GC/MS**							
X00410	XG.2000.1175-3	75-34-3	1,1 Dichloroethane	ND	ug / L	1	1		10/18/0C
X00410	XG.2000.1175-3	75-34-3	1,1 Dichloroethene	ND	ug / L	1	1		10/18/0C
X00410	XG.2000.1175-3	71-55-6	1,1,1 Trichloroethane	ND	ug / L	1	1		10/18/0C
X00410	XG.2000.1175-3	630-20-6	1,1,1,2 Tetrachloroethane	ND	ug / L	1	1		10/18/0C
X00410	XG.2000.1175-3	79-00-5	1,1,2 Trichloroethane	ND	ug / L	1	1		10/18/0C
X00410	XG.2000.1175-3	79-34-5	1,1,2,2 Tetrachloroethane	ND	ug / L	1	1		10/18/0C
X00410	XG.2000.1175-3	106-93-4	1,2 Dibromoethane (EDB)	ND	ug / L	1	1		10/18/0C
X00410	XG.2000.1175-3	95-50-1	1,2 Dichlorobenzene	ND	ug / L	1	1		10/18/0C
X00410	XG.2000.1175-3	107-06-2	1,2 Dichloroethane	ND	ug / L	1	1		10/18/0C
X00410	XG.2000.1175-3	78-87-5	1,2 Dichloropropane	ND	ug / L	1	1		10/18/
X00410	XG.2000.1175-3	96-18-4	1,2,3 Trichloropropane	ND	ug / L	1	1		10/18

Certificate of Analysis

t: CH2MHILL

Project: 0010155 KAFB BULK FUEL FAC(ST106)

X00410	XG.2000.1175-3	95-63-6	1,2,4-Trimethylbenzene	ND	ug / L	1	1		10/18/00
X00410	XG.2000.1175-3	541-73-1	1,3 Dichlorobenzene	ND	ug / L	1	1		10/18/00
X00410	XG.2000.1175-3	108-67-8	1,3,5-Trimethylbenzene	ND	ug / L	1	1		10/18/00
X00410	XG.2000.1175-3	764-41-0	1,4 Dichloro-2-butene	ND	ug / L	1	10		10/18/00
X00410	XG.2000.1175-3	106-46-7	1,4 Dichlorobenzene	ND	ug / L	1	1		10/18/00
X00410	XG.2000.1175-3	78-93-3	2-Butanone (MEK)	ND	ug / L	1	5		10/18/00
X00410	XG.2000.1175-3	110-75-8	2-Chloroethylvinylether	ND	ug / L	1	5		10/18/00
X00410	XG.2000.1175-3	591-78-6	2-Hexanone (MBK)	ND	ug / L	1	5		10/18/00
X00410	XG.2000.1175-3	108-10-1	4-Methyl-2-pentanone (MIBK)	ND	ug / L	1	5		10/18/00
X00410	XG.2000.1175-3	67-64-1	Acetone	ND	ug / L	1	10		10/18/00
X00410	XG.2000.1175-3	107-02-8	Acrolein	ND	ug / L	1	20		10/18/00
X00410	XG.2000.1175-3	107-13-1	Acrylonitrile	ND	ug / L	1	20		10/18/00
X00410	XG.2000.1175-3	71-43-2	Benzene	ND	ug / L	1	1		10/18/00
X00410	XG.2000.1175-3	75-27-4	Bromodichloromethane	ND	ug / L	1	1		10/18/00
X00410	XG.2000.1175-3	75-25-2	Bromoform	ND	ug / L	1	1		10/18/00
X00410	XG.2000.1175-3	74-83-9	Bromomethane	ND	ug / L	1	5		10/18/00
X00410	XG.2000.1175-3	75-15-0	Carbon disulfide	ND	ug / L	1	5		10/18/00
X00410	XG.2000.1175-3	56-23-5	Carbon tetrachloride	ND	ug / L	1	1		10/18/00
X00410	XG.2000.1175-3	108-90-7	Chlorobenzene	ND	ug / L	1	1		10/18/00
X00410	XG.2000.1175-3	124-48-1	Chlorodibromomethane	ND	ug / L	1	1		10/18/00
X00410	XG.2000.1175-3	75-00-3	Chloroethane	ND	ug / L	1	5		10/18/00
X00410	XG.2000.1175-3	67-66-3	Chloroform	ND	ug / L	1	1		10/18/00
[illegible]0	XG.2000.1175-3	74-87-3	Chloromethane	ND	ug / L	1	5		10/18/00
[illegible]0	XG.2000.1175-3	156-59-2	cis-1,2 dichloroethene	ND	ug / L	1	1		10/18/00
X00410	XG.2000.1175-3	10061-01-5	cis-1,3 dichloropropene	ND	ug / L	1	1		10/18/00
X00410	XG.2000.1175-3	74-95-3	Dibromomethane	ND	ug / L	1	1		10/18/00
X00410	XG.2000.1175-3	97-63-2	Ethyl methacrylate	ND	ug / L	1	5		10/18/00
X00410	XG.2000.1175-3	100-41-4	Ethylbenzene	ND	ug / L	1	1		10/18/00
X00410	XG.2000.1175-3		Freon 113	ND	ug / L	1	5		10/18/00
X00410	XG.2000.1175-3	75-71-8	Freon 12	ND	ug / L	1	10		10/18/00
X00410	XG.2000.1175-3	74-88-4	Iodomethane	ND	ug / L	1	5		10/18/00
X00410	XG.2000.1175-3	1634-04-4	Methyl t-butyl ether (MTBE)	ND	ug / L	1	1		10/18/00
X00410	XG.2000.1175-3	75-09-2	Methylene chloride	ND	ug / L	1	10		10/18/00
X00410	XG.2000.1175-3	91-20-3	Naphthalene	ND	ug / L	1	5		10/18/00
X00410	XG.2000.1175-3	95-47-6	o-Xylene	ND	ug / L	1	1		10/18/00
X00410	XG.2000.1175-3	108-38-3/106-42	p/m Xylenes	ND	ug / L	1	2		10/18/00
X00410	XG.2000.1175-3	100-42-5	Styrene	ND	ug / L	1	1		10/18/00
X00410	XG.2000.1175-3	156-60-5	t-1,2 Dichloroethene	ND	ug / L	1	1		10/18/00
X00410	XG.2000.1175-3	10061-02-6	t-1,3 Dichloropropene	ND	ug / L	1	1		10/18/00
X00410	XG.2000.1175-3	127-18-4	Tetrachloroethene	ND	ug / L	1	1		10/18/00
X00410	XG.2000.1175-3	108-88-3	Toluene	ND	ug / L	1	1		10/18/00
X00410	XG.2000.1175-3	79-01-6	Trichloroethene	ND	ug / L	1	1		10/18/00
X00410	XG.2000.1175-3	75-69-4	Trichlorofluoromethane	ND	ug / L	1	5		10/18/00
X00410	XG.2000.1175-3	108-05-4	Vinyl acetate	ND	ug / L	1	5		10/18/00
X00410	XG.2000.1175-3	75-01-4	Vinyl chloride	ND	ug / L	1	5		10/18/00

Certificate of Analysis

Client: **CH2MHILL**

Project: **0010155** **KAFB BULK FUEL FAC(ST106)**

**** Sample specific Detection Limit is determined by multiplying the sample Dilution Factor by the listed Reporting Detection Limit. ****

**** ND = Not detected: less than the sample specific Detection Limit. Results relate only to the items tested. ****

footnote

1 Sample was received with headspace.

2 This sample was spiked per client request. The acids were spiked at 6.67 mg/kg and the base neutrals were spiked at 3.33 mg/kg.

memo

Please note that Fractions 0010155-04 and 0010155-05 were not spiked by the analyst.

Quality Control Summary

Client: CH2MHILL

Project: 0010155 KAFB BULK FUEL FAC(ST106)

Explanation of codes

D	*Not applicable due to sample dilution*
L	*Not applicable due to MDL proximity*

QC Type: **LCS: Lab Control Spike** QC Matrix: **SOLID**

QC Group	Run Sequence	CAS #	Analyte	Result	Units	Dilution Factor	Detection Limit	Code	Run Date
X00392-002		**SW846 5030A/8021B Purgeable VOCs by GC/PID**							
X00392	XG.2000.1112-2	71-43-2	Benzene	101	% Recovery	1	NA		10/05/00
X00392	XG.2000.1112-2	100-41-4	Ethylbenzene	103	% Recovery	1	NA		10/05/00
X00392	XG.2000.1112-2	95-47-6	o-Xylene	100	% Recovery	1	NA		10/05/00
X00392	XG.2000.1112-2	108-38-3/106-42	p/m-Xylenes	103	% Recovery	1	NA		10/05/00
X00392	XG.2000.1112-2	108-88-3	Toluene	100	% Recovery	1	NA		10/05/00
X00398-005		**SW846 8260A Purgeable VOCs by GC/MS**							
X00398	XG.2000.1158-3	75-34-3	1,1 Dichloroethene	108	% Recovery	1	NA		10/10/00
X00398	XG.2000.1206-2	75-34-3	1,1 Dichloroethene	108	% Recovery	1	NA		10/10/00
X00398	XG.2000.1158-3	106-46-7	1,4 Dichlorobenzene	99	% Recovery	1	NA		10/10/00
X00398	XG.2000.1206-2	106-46-7	1,4 Dichlorobenzene	99	% Recovery	1	NA		10/10/00
X00398	XG.2000.1158-3	71-43-2	Benzene	108	% Recovery	1	NA		10/10/00
X00398	XG.2000.1206-2	71-43-2	Benzene	108	% Recovery	1	NA		10/10/00
X00398	XG.2000.1158-3	108-90-7	Chlorobenzene	105	% Recovery	1	NA		10/10/00
X00398	XG.2000.1206-2	108-90-7	Chlorobenzene	105	% Recovery	1	NA		10/10/00
X00398	XG.2000.1158-3	108-88-3	Toluene	106	% Recovery	1	NA		10/10/00
8	XG.2000.1206-2	108-88-3	Toluene	106	% Recovery	1	NA		10/10/00
X00398	XG.2000.1158-3	79-01-6	Trichloroethene	108	% Recovery	1	NA		10/10/00
X00398	XG.2000.1206-2	79-01-6	Trichloroethene	108	% Recovery	1	NA		10/10/00
X00403-002		**SW846 ME/8015A Diesel Range Organics by GC/FID**							
X00403	XG.2000.1139-2		Diesel Range Organics	108	% Recovery	1	NA		10/13/00
X00406-002		**SW846 3550A/8270B SVOCs by GC/MS**							
X00406	XG.2000.1171-2	120-82-1	1,2,4-Trichlorobenzene	70	% Recovery	1	NA		10/17/00
X00406	XG.2000.1171-2	106-46-7	1,4-Dichlorobenzene	69	% Recovery	1	NA		10/17/00
X00406	XG.2000.1171-2	121-14-2	2,4-Dinitrotoluene	74	% Recovery	1	NA		10/17/00
X00406	XG.2000.1171-2	95-57-8	2-Chlorophenol	83	% Recovery	1	NA		10/17/00
X00406	XG.2000.1171-2	59-50-7	4-Chloro-3-methylphenol	87	% Recovery	1	NA		10/17/00
X00406	XG.2000.1171-2	100-02-7	4-Nitrophenol	91	% Recovery	1	NA		10/17/00
X00406	XG.2000.1171-2	83-32-9	Acenaphthene	79	% Recovery	1	NA		10/17/00
X00406	XG.2000.1171-2	117-84-0	di-n-Octylpthalate	74	% Recovery	1	NA		10/17/00
X00406	XG.2000.1171-2	621-64-7	n-Nitroso-di-n-propylamine	79	% Recovery	1	NA		10/17/00
X00406	XG.2000.1171-2	87-86-5	Pentachlorophenol	78	% Recovery	1	NA		10/17/00
X00406	XG.2000.1171-2	108-95-2	Phenol	82	% Recovery	1	NA		10/17/00
X00406	XG.2000.1171-2	129-00-0	Pyrene	84	% Recovery	1	NA		10/17/00
X00408-002		**SW846 5030A/8015A GRO by GC/FID**							
X00408	XG.2000.1155-2		Gasoline Range Organics	95	% Recovery	1	NA		10/16/00

Quality Control Summary

Client: CH2MHILL

Project: 0010155 KAFB BULK FUEL FAC(ST106)

Explanation of codes

D *Not applicable due to sample diluti*

L *Not applicable due to MDL proximity*

QC Type **LCSD: Lab Control Spike Duplicate Accuracy** QC Matrix **SOLID**

QC Group	Run Sequence	CAS #	Analyte	Result	Units	Dilution Factor	Detection Limit	Code	Run Date
X00392-003		**SW846 5030A/8021B Purgeable VOCs by GC/PID**							
X00392	XG.2000.1112-3	71-43-2	Benzene	107	% Recovery	1	NA		10/05/00
X00392	XG.2000.1112-3	100-41-4	Ethylbenzene	109	% Recovery	1	NA		10/05/00
X00392	XG.2000.1112-3	95-47-6	o-Xylene	108	% Recovery	1	NA		10/05/00
X00392	XG.2000.1112-3	108-38-3/106-42	p/m-Xylenes	109	% Recovery	1	NA		10/05/00
X00392	XG.2000.1112-3	108-88-3	Toluene	106	% Recovery	1	NA		10/05/00
X00398-006		**SW846 8260A Purgeable VOCs by GC/MS**							
X00398	XG.2000.1158-4	75-34-3	1,1 Dichloroethene	105	% Recovery	1	NA		10/10/00
X00398	XG.2000.1206-3	75-34-3	1,1 Dichloroethene	105	% Recovery	1	NA		10/10/00
X00398	XG.2000.1158-4	106-46-7	1,4 Dichlorobenzene	99	% Recovery	1	NA		10/10/00
X00398	XG.2000.1206-3	106-46-7	1,4 Dichlorobenzene	99	% Recovery	1	NA		10/10/00
X00398	XG.2000.1158-4	71-43-2	Benzene	107	% Recovery	1	NA		10/10/00
X00398	XG.2000.1206-3	71-43-2	Benzene	107	% Recovery	1	NA		10/10/00
X00398	XG.2000.1158-4	108-90-7	Chlorobenzene	104	% Recovery	1	NA		10/10/00
X00398	XG.2000.1206-3	108-90-7	Chlorobenzene	104	% Recovery	1	NA		10/10/00
X00398	XG.2000.1158-4	108-88-3	Toluene	104	% Recovery	1	NA		10/10/00
X00398	XG.2000.1206-3	108-88-3	Toluene	104	% Recovery	1	NA		10/10/
X00398	XG.2000.1158-4	79-01-6	Trichloroethene	108	% Recovery	1	NA		10/10/00
X00398	XG.2000.1206-3	79-01-6	Trichloroethene	108	% Recovery	1	NA		10/10/00
X00403-003		**SW846 ME/8015A Diesel Range Organics by GC/FID**							
X00403	XG.2000.1139-3		Diesel Range Organics	101	% Recovery	1	NA		10/13/00
X00406-003		**SW846 3550A/8270B SVOCs by GC/MS**							
X00406	XG.2000.1171-3	120-82-1	1,2,4-Trichlorobenzene	72	% Recovery	1	NA		10/17/00
X00406	XG.2000.1171-3	106-46-7	1,4-Dichlorobenzene	71	% Recovery	1	NA		10/17/00
X00406	XG.2000.1171-3	121-14-2	2,4-Dinitrotoluene	74	% Recovery	1	NA		10/17/00
X00406	XG.2000.1171-3	95-57-8	2-Chlorophenol	86	% Recovery	1	NA		10/17/00
X00406	XG.2000.1171-3	59-50-7	4-Chloro-3-methylphenol	85	% Recovery	1	NA		10/17/00
X00406	XG.2000.1171-3	100-02-7	4-Nitrophenol	90	% Recovery	1	NA		10/17/00
X00406	XG.2000.1171-3	83-32-9	Acenaphthene	79	% Recovery	1	NA		10/17/00
X00406	XG.2000.1171-3	117-84-0	di-n-Octylpthalate	74	% Recovery	1	NA		10/17/00
X00406	XG.2000.1171-3	621-64-7	n-Nitroso-di-n-propylamine	78	% Recovery	1	NA		10/17/00
X00406	XG.2000.1171-3	87-86-5	Pentachlorophenol	80	% Recovery	1	NA		10/17/00
X00406	XG.2000.1171-3	108-95-2	Phenol	84	% Recovery	1	NA		10/17/00
X00406	XG.2000.1171-3	129-00-0	Pyrene	88	% Recovery	1	NA		10/17/00
X00408-003		**SW846 5030A/8015A GRO by GC/FID**							
X00408	XG.2000.1155-3		Gasoline Range Organics	94	% Recovery	1	NA		10/16/00

Quality Control Summary

Client: CH2MHILL

ct: 0010155 KAFB BULK FUEL FAC(ST106)

Explanation of codes

D	*Not applicable due to sample dilution*
L	*Not applicable due to MDL proximity*

QC Type **LCSD: Lab Control Spike Duplicate Precision** QC Matrix **SOLID**

QC Group	Run Sequence	CAS #	Analyte	Result	Units	Dilution Factor	Detection Limit	Code	Run Date
X00392-003		**SW846 5030A/8021B Purgeable VOCs by GC/PID**							
X00392	XG.2000.1112-3	71-43-2	Benzene	6	RPD	1	NA		10/05/00
X00392	XG.2000.1112-3	100-41-4	Ethylbenzene	6	RPD	1	NA		10/05/00
X00392	XG.2000.1112-3	95-47-6	o-Xylene	8	RPD	1	NA		10/05/00
X00392	XG.2000.1112-3	108-38-3/106-42	p/m-Xylenes	6	RPD	1	NA		10/05/00
X00392	XG.2000.1112-3	108-88-3	Toluene	6	RPD	1	NA		10/05/00
X00398-006		**SW846 8260A Purgeable VOCs by GC/MS**							
X00398	XG.2000.1158-4	75-34-3	1,1 Dichloroethene	3	RPD	1	NA		10/10/00
X00398	XG.2000.1206-3	75-34-3	1,1 Dichloroethene	3	RPD	1	NA		10/10/00
X00398	XG.2000.1158-4	106-46-7	1,4 Dichlorobenzene	< 1	RPD	1	NA		10/10/00
X00398	XG.2000.1206-3	106-46-7	1,4 Dichlorobenzene	< 1	RPD	1	NA		10/10/00
X00398	XG.2000.1158-4	71-43-2	Benzene	< 1	RPD	1	NA		10/10/00
X00398	XG.2000.1206-3	71-43-2	Benzene	< 1	RPD	1	NA		10/10/00
X00398	XG.2000.1158-4	108-90-7	Chlorobenzene	2	RPD	1	NA		10/10/00
X00398	XG.2000.1206-3	108-90-7	Chlorobenzene	2	RPD	1	NA		10/10/00
X00398	XG.2000.1158-4	108-88-3	Toluene	1	RPD	1	NA		10/10/00
[illegible]8	XG.2000.1206-3	108-88-3	Toluene	1	RPD	1	NA		10/10/00
[illegible]8	XG.2000.1158-4	79-01-6	Trichloroethene	< 1	RPD	1	NA		10/10/00
X00398	XG.2000.1206-3	79-01-6	Trichloroethene	< 1	RPD	1	NA		10/10/00
X00403-003		**SW846 ME/8015A Diesel Range Organics by GC/FID**							
X00403	XG.2000.1139-3		Diesel Range Organics	7	RPD	1	NA		10/13/00
X00406-003		**SW846 3550A/8270B SVOCs by GC/MS**							
X00406	XG.2000.1171-3	120-82-1	1,2,4-Trichlorobenzene	2	RPD	1	NA		10/17/00
X00406	XG.2000.1171-3	106-46-7	1,4-Dichlorobenzene	3	RPD	1	NA		10/17/00
X00406	XG.2000.1171-3	121-14-2	2,4-Dinitrotoluene	< 1	RPD	1	NA		10/17/00
X00406	XG.2000.1171-3	95-57-8	2-Chlorophenol	3	RPD	1	NA		10/17/00
X00406	XG.2000.1171-3	59-50-7	4-Chloro-3-methylphenol	2	RPD	1	NA		10/17/00
X00406	XG.2000.1171-3	100-02-7	4-Nitrophenol	< 1	RPD	1	NA		10/17/00
X00406	XG.2000.1171-3	83-32-9	Acenaphthene	< 1	RPD	1	NA		10/17/00
X00406	XG.2000.1171-3	117-84-0	di-n-Octylpthalate	1	RPD	1	NA		10/17/00
X00406	XG.2000.1171-3	621-64-7	n-Nitroso-di-n-propylamine	< 1	RPD	1	NA		10/17/00
X00406	XG.2000.1171-3	87-86-5	Pentachlorophenol	1	RPD	1	NA		10/17/00
X00406	XG.2000.1171-3	108-95-2	Phenol	2	RPD	1	NA		10/17/00
X00406	XG.2000.1171-3	129-00-0	Pyrene	5	RPD	1	NA		10/17/00
X00408-003		**SW846 5030A/8015A GRO by GC/FID**							
X00408	XG.2000.1155-3		Gasoline Range Organics	< 1	RPD	1	NA		10/16/00

Quality Control Summary

Client: CH2MHILL

Project: 0010155 KAFB BULK FUEL FAC(ST106)

Explanation of codes

D *Not applicable due to sample dilut*

L *Not applicable due to MDL proximity*

QC Type **MB: Method Blank** QC Matrix **SOLID**

QC Group	Run Sequence	CAS #	Analyte	Result	Units	Dilution Factor	Detection Limit	Code	Run Date
X00392-001		**SW846 5030A/8021B Purgeable VOCs by GC/PID**							
X00392	XG.2000.1112-1	71-43-2	Benzene	ND	mg / Kg	1	0.005		10/05/0(
X00392	XG.2000.1112-1	100-41-4	Ethylbenzene	ND	mg / Kg	1	0.005		10/05/0(
X00392	XG.2000.1112-1	95-47-6	o-Xylene	ND	mg / Kg	1	0.005		10/05/0(
X00392	XG.2000.1112-1	108-38-3/106-42	p/m-Xylenes	ND	mg / Kg	1	0.01		10/05/0(
X00392	XG.2000.1112-1	108-88-3	Toluene	ND	mg / Kg	1	0.005		10/05/0(
X00392-014		**SW846 5030A/8021B Purgeable VOCs by GC/PID**							
X00392	XG.2000.1156-1	71-43-2	Benzene	ND	mg / Kg	1	0.005		10/17/0(
X00392	XG.2000.1156-1	100-41-4	Ethylbenzene	ND	mg / Kg	1	0.005		10/17/0(
X00392	XG.2000.1156-1	95-47-6	o-Xylene	ND	mg / Kg	1	0.005		10/17/0(
X00392	XG.2000.1156-1	108-38-3/106-42	p/m-Xylenes	ND	mg / Kg	1	0.01		10/17/0(
X00392	XG.2000.1156-1	108-88-3	Toluene	ND	mg / Kg	1	0.005		10/17/0(
X00392-024		**SW846 5030A/8021B Purgeable VOCs by GC/PID**							
X00392	XG.2000.1164-4	71-43-2	Benzene	ND	mg / Kg	1	0.005		10/18/0(
X00392	XG.2000.1164-4	100-41-4	Ethylbenzene	ND	mg / Kg	1	0.005		10/18/0
X00392	XG.2000.1164-4	95-47-6	o-Xylene	ND	mg / Kg	1	0.005		10/18/
X00392	XG.2000.1164-4	108-38-3/106-42	p/m-Xylenes	ND	mg / Kg	1	0.01		10/18/0(
X00392	XG.2000.1164-4	108-88-3	Toluene	ND	mg / Kg	1	0.005		10/18/0(
X00398-001		**SW846 8260A Purgeable VOCs by GC/MS**							
X00398	XG.2000.1158-1	75-34-3	1,1 Dichloroethane	ND	mg / Kg	1	0.005		10/10/00
X00398	XG.2000.1206-1	75-34-3	1,1 Dichloroethane	ND	mg / Kg	1	0.005		10/10/00
X00398	XG.2000.1158-1	75-34-3	1,1 Dichloroethene	ND	mg / Kg	1	0.005		10/10/00
X00398	XG.2000.1206-1	75-34-3	1,1 Dichloroethene	ND	mg / Kg	1	0.005		10/10/00
X00398	XG.2000.1158-1	71-55-6	1,1,1 Trichloroethane	ND	mg / Kg	1	0.005		10/10/00
X00398	XG.2000.1206-1	71-55-6	1,1,1 Trichloroethane	ND	mg / Kg	1	0.005		10/10/00
X00398	XG.2000.1158-1	630-20-6	1,1,1,2 Tetrachloroethane	ND	mg / Kg	1	0.005		10/10/00
X00398	XG.2000.1206-1	630-20-6	1,1,1,2 Tetrachloroethane	ND	mg / Kg	1	0.005		10/10/00
X00398	XG.2000.1158-1	79-00-5	1,1,2 Trichloroethane	ND	mg / Kg	1	0.005		10/10/00
X00398	XG.2000.1206-1	79-00-5	1,1,2 Trichloroethane	ND	mg / Kg	1	0.005		10/10/00
X00398	XG.2000.1158-1	79-34-5	1,1,2,2 Tetrachloroethane	ND	mg / Kg	1	0.005		10/10/00
X00398	XG.2000.1206-1	79-34-5	1,1,2,2 Tetrachloroethane	ND	mg / Kg	1	0.005		10/10/00
X00398	XG.2000.1158-1	106-93-4	1,2 Dibromoethane (EDB)	ND	mg / Kg	1	0.005		10/10/00
X00398	XG.2000.1206-1	106-93-4	1,2 Dibromoethane (EDB)	ND	mg / Kg	1	0.005		10/10/00
X00398	XG.2000.1158-1	95-50-1	1,2 Dichlorobenzene	ND	mg / Kg	1	0.005		10/10/00
X00398	XG.2000.1206-1	95-50-1	1,2 Dichlorobenzene	ND	mg / Kg	1	0.005		10/10/00
X00398	XG.2000.1158-1	107-06-2	1,2 Dichloroethane	ND	mg / Kg	1	0.005		10/10/00
X00398	XG.2000.1206-1	107-06-2	1,2 Dichloroethane	ND	mg / Kg	1	0.005		10/10/00
X00398	XG.2000.1158-1	78-87-5	1,2 Dichloropropane	ND	mg / Kg	1	0.005		10/10/00
X00398	XG.2000.1206-1	78-87-5	1,2 Dichloropropane	ND	mg / Kg	1	0.005		10/10/00
X00398	XG.2000.1158-1	96-18-4	1,2,3 Trichloropropane	ND	mg / Kg	1	0.005		10/10/(
X00398	XG.2000.1206-1	96-18-4	1,2,3 Trichloropropane	ND	mg / Kg	1	0.005		10/10/(

Quality Control Summary

t: CH2MHILL

Project: 0010155 KAFB BULK FUEL FAC(ST106)

Explanation of codes

D *Not applicable due to sample dilution*

L *Not applicable due to MDL proximity*

X00398	XG.2000.1158-1	95-63-6	1,2,4-Trimethylbenzene	ND	mg / Kg	1	0.005	10/10/00
X00398	XG.2000.1206-1	95-63-6	1,2,4-Trimethylbenzene	ND	mg / Kg	1	0.005	10/10/00
X00398	XG.2000.1158-1	541-73-1	1,3 Dichlorobenzene	ND	mg / Kg	1	0.005	10/10/00
X00398	XG.2000.1206-1	541-73-1	1,3 Dichlorobenzene	ND	mg / Kg	1	0.005	10/10/00
X00398	XG.2000.1158-1	108-67-8	1,3,5-Trimethylbenzene	ND	mg / Kg	1	0.005	10/10/00
X00398	XG.2000.1206-1	108-67-8	1,3,5-Trimethylbenzene	ND	mg / Kg	1	0.005	10/10/00
X00398	XG.2000.1158-1	764-41-0	1,4 Dichloro-2-butene	ND	mg / Kg	1	0.05	10/10/00
X00398	XG.2000.1206-1	764-41-0	1,4 Dichloro-2-butene	ND	mg / Kg	1	0.05	10/10/00
X00398	XG.2000.1158-1	106-46-7	1,4 Dichlorobenzene	ND	mg / Kg	1	0.005	10/10/00
X00398	XG.2000.1206-1	106-46-7	1,4 Dichlorobenzene	ND	mg / Kg	1	0.005	10/10/00
X00398	XG.2000.1158-1	78-93-3	2-Butanone (MEK)	ND	mg / Kg	1	0.025	10/10/00
X00398	XG.2000.1206-1	78-93-3	2-Butanone (MEK)	ND	mg / Kg	1	0.025	10/10/00
X00398	XG.2000.1158-1	110-75-8	2-Chloroethylvinylether	ND	mg / Kg	1	0.025	10/10/00
X00398	XG.2000.1206-1	110-75-8	2-Chloroethylvinylether	ND	mg / Kg	1	0.025	10/10/00
X00398	XG.2000.1158-1	591-78-6	2-Hexanone (MBK)	ND	mg / Kg	1	0.025	10/10/00
X00398	XG.2000.1206-1	591-78-6	2-Hexanone (MBK)	ND	mg / Kg	1	0.025	10/10/00
X00398	XG.2000.1158-1	108-10-1	4-Methyl-2-pentanone (MIBK)	ND	mg / Kg	1	0.025	10/10/00
X00398	XG.2000.1206-1	108-10-1	4-Methyl-2-pentanone (MIBK)	ND	mg / Kg	1	0.025	10/10/00
X00398	XG.2000.1158-1	67-64-1	Acetone	ND	mg / Kg	1	0.05	10/10/00
X00398	XG.2000.1206-1	67-64-1	Acetone	ND	mg / Kg	1	0.05	10/10/00
X00398	XG.2000.1158-1	107-02-8	Acrolein	ND	mg / Kg	1	0.1	10/10/00
X00398	XG.2000.1206-1	107-02-8	Acrolein	ND	mg / Kg	1	0.1	10/10/00
X00398	XG.2000.1158-1	107-13-1	Acrylonitrile	ND	mg / Kg	1	0.1	10/10/00
8	XG.2000.1206-1	107-13-1	Acrylonitrile	ND	mg / Kg	1	0.1	10/10/00
X00398	XG.2000.1158-1	71-43-2	Benzene	ND	mg / Kg	1	0.005	10/10/00
X00398	XG.2000.1206-1	71-43-2	Benzene	ND	mg / Kg	1	0.005	10/10/00
X00398	XG.2000.1158-1	75-27-4	Bromodichloromethane	ND	mg / Kg	1	0.005	10/10/00
X00398	XG.2000.1206-1	75-27-4	Bromodichloromethane	ND	mg / Kg	1	0.005	10/10/00
X00398	XG.2000.1158-1	75-25-2	Bromoform	ND	mg / Kg	1	0.005	10/10/00
X00398	XG.2000.1206-1	75-25-2	Bromoform	ND	mg / Kg	1	0.005	10/10/00
X00398	XG.2000.1158-1	74-83-9	Bromomethane	ND	mg / Kg	1	0.025	10/10/00
X00398	XG.2000.1206-1	74-83-9	Bromomethane	ND	mg / Kg	1	0.025	10/10/00
X00398	XG.2000.1158-1	75-15-0	Carbon disulfide	ND	mg / Kg	1	0.025	10/10/00
X00398	XG.2000.1206-1	75-15-0	Carbon disulfide	ND	mg / Kg	1	0.025	10/10/00
X00398	XG.2000.1158-1	56-23-5	Carbon tetrachloride	ND	mg / Kg	1	0.005	10/10/00
X00398	XG.2000.1206-1	56-23-5	Carbon tetrachloride	ND	mg / Kg	1	0.005	10/10/00
X00398	XG.2000.1158-1	108-90-7	Chlorobenzene	ND	mg / Kg	1	0.005	10/10/00
X00398	XG.2000.1206-1	108-90-7	Chlorobenzene	ND	mg / Kg	1	0.005	10/10/00
X00398	XG.2000.1158-1	124-48-1	Chlorodibromomethane	ND	mg / Kg	1	0.005	10/10/00
X00398	XG.2000.1206-1	124-48-1	Chlorodibromomethane	ND	mg / Kg	1	0.005	10/10/00
X00398	XG.2000.1158-1	75-00-3	Chloroethane	ND	mg / Kg	1	0.025	10/10/00
X00398	XG.2000.1206-1	75-00-3	Chloroethane	ND	mg / Kg	1	0.025	10/10/00
X00398	XG.2000.1158-1	67-66-3	Chloroform	ND	mg / Kg	1	0.005	10/10/00
X00398	XG.2000.1206-1	67-66-3	Chloroform	ND	mg / Kg	1	0.005	10/10/00
X00398	XG.2000.1158-1	74-87-3	Chloromethane	ND	mg / Kg	1	0.025	10/10/00
X00398	XG.2000.1206-1	74-87-3	Chloromethane	ND	mg / Kg	1	0.025	10/10/00
X00398	XG.2000.1158-1	156-59-2	cis-1,2 dichloroethene	ND	mg / Kg	1	0.005	10/10/00
X00398	XG.2000.1206-1	156-59-2	cis-1,2 dichloroethene	ND	mg / Kg	1	0.005	10/10/00
398	XG.2000.1158-1	10061-01-5	cis-1,3 dichloropropene	ND	mg / Kg	1	0.005	10/10/00
398	XG.2000.1206-1	10061-01-5	cis-1,3 dichloropropene	ND	mg / Kg	1	0.005	10/10/00
X00398	XG.2000.1158-1	74-95-3	Dibromomethane	ND	mg / Kg	1	0.005	10/10/00

Quality Control Summary

Client: CH2MHILL

Project: 0010155 KAFB BULK FUEL FAC(ST106)

Explanation of codes

D Not applicable due to sample dilu

L Not applicable due to MDL proxim

X00398	XG.2000.1206-1	74-95-3	Dibromomethane	ND	mg / Kg	1	0.005	10/10/00
X00398	XG.2000.1158-1	97-63-2	Ethyl methacrylate	ND	mg / Kg	1	0.025	10/10/00
X00398	XG.2000.1206-1	97-63-2	Ethyl methacrylate	ND	mg / Kg	1	0.025	10/10/00
X00398	XG.2000.1158-1	100-41-4	Ethylbenzene	ND	mg / Kg	1	0.005	10/10/00
X00398	XG.2000.1206-1	100-41-4	Ethylbenzene	ND	mg / Kg	1	0.005	10/10/00
X00398	XG.2000.1158-1		Freon 113	ND	mg / Kg	1	0.025	10/10/00
X00398	XG.2000.1206-1		Freon 113	ND	mg / Kg	1	0.025	10/10/00
X00398	XG.2000.1158-1	75-71-8	Freon 12	ND	mg / Kg	1	0.05	10/10/00
X00398	XG.2000.1206-1	75-71-8	Freon 12	ND	mg / Kg	1	0.05	10/10/00
X00398	XG.2000.1158-1	74-88-4	Iodomethane	ND	mg / Kg	1	0.025	10/10/00
X00398	XG.2000.1206-1	74-88-4	Iodomethane	ND	mg / Kg	1	0.025	10/10/00
X00398	XG.2000.1158-1	1634-04-4	Methyl t-butyl ether (MTBE)	ND	mg / Kg	1	0.005	10/10/00
X00398	XG.2000.1206-1	1634-04-4	Methyl t-butyl ether (MTBE)	ND	mg / Kg	1	0.005	10/10/00
X00398	XG.2000.1158-1	75-09-2	Methylene chloride	ND	mg / Kg	1	0.05	10/10/00
X00398	XG.2000.1206-1	75-09-2	Methylene chloride	ND	mg / Kg	1	0.05	10/10/00
X00398	XG.2000.1158-1	91-20-3	Naphthalene	ND	mg / Kg	1	0.025	10/10/00
X00398	XG.2000.1206-1	91-20-3	Naphthalene	ND	mg / Kg	1	0.025	10/10/00
X00398	XG.2000.1158-1	95-47-6	o-Xylene	ND	mg / Kg	1	0.005	10/10/00
X00398	XG.2000.1206-1	95-47-6	o-Xylene	ND	mg / Kg	1	0.005	10/10/00
X00398	XG.2000.1158-1	108-38-3/106-42	p/m Xylenes	ND	mg / Kg	1	0.01	10/10/00
X00398	XG.2000.1206-1	108-38-3/106-42	p/m Xylenes	ND	mg / Kg	1	0.01	10/10/00
X00398	XG.2000.1158-1	100-42-5	Styrene	ND	mg / Kg	1	0.005	10/10/00
X00398	XG.2000.1206-1	100-42-5	Styrene	ND	mg / Kg	1	0.005	10/10
X00398	XG.2000.1158-1	156-60-5	t-1,2 Dichloroethene	ND	mg / Kg	1	0.005	10/10
X00398	XG.2000.1206-1	156-60-5	t-1,2 Dichloroethene	ND	mg / Kg	1	0.005	10/10/00
X00398	XG.2000.1158-1	10061-02-6	t-1,3 Dichloropropene	ND	mg / Kg	1	0.005	10/10/00
X00398	XG.2000.1206-1	10061-02-6	t-1,3 Dichloropropene	ND	mg / Kg	1	0.005	10/10/00
X00398	XG.2000.1158-1	127-18-4	Tetrachloroethene	ND	mg / Kg	1	0.005	10/10/00
X00398	XG.2000.1206-1	127-18-4	Tetrachloroethene	ND	mg / Kg	1	0.005	10/10/00
X00398	XG.2000.1158-1	108-88-3	Toluene	ND	mg / Kg	1	0.005	10/10/00
X00398	XG.2000.1206-1	108-88-3	Toluene	ND	mg / Kg	1	0.005	10/10/00
X00398	XG.2000.1158-1	79-01-6	Trichloroethene	ND	mg / Kg	1	0.005	10/10/00
X00398	XG.2000.1206-1	79-01-6	Trichloroethene	ND	mg / Kg	1	0.005	10/10/00
X00398	XG.2000.1158-1	75-69-4	Trichlorofluoromethane	ND	mg / Kg	1	0.025	10/10/00
X00398	XG.2000.1206-1	75-69-4	Trichlorofluoromethane	ND	mg / Kg	1	0.025	10/10/00
X00398	XG.2000.1158-1	108-05-4	Vinyl acetate	ND	mg / Kg	1	0.025	10/10/00
X00398	XG.2000.1206-1	108-05-4	Vinyl acetate	ND	mg / Kg	1	0.025	10/10/00
X00398	XG.2000.1158-1	75-01-4	Vinyl chloride	ND	mg / Kg	1	0.025	10/10/00
X00398	XG.2000.1206-1	75-01-4	Vinyl chloride	ND	mg / Kg	1	0.025	10/10/00
X00398-007		**SW846 8260A Purgeable VOCs by GC/MS**						
X00398	XG.2000.1158-5	75-34-3	1,1 Dichloroethane	ND	mg / Kg	1	0.005	10/16/00
X00398	XG.2000.1206-4	75-34-3	1,1 Dichloroethane	ND	mg / Kg	1	0.005	10/16/00
X00398	XG.2000.1158-5	75-34-3	1,1 Dichloroethene	ND	mg / Kg	1	0.005	10/16/00
X00398	XG.2000.1206-4	75-34-3	1,1 Dichloroethene	ND	mg / Kg	1	0.005	10/16/00
X00398	XG.2000.1158-5	71-55-6	1,1,1 Trichloroethane	ND	mg / Kg	1	0.005	10/16/00
X00398	XG.2000.1206-4	71-55-6	1,1,1 Trichloroethane	ND	mg / Kg	1	0.005	10/16/00
X00398	XG.2000.1158-5	630-20-6	1,1,1,2 Tetrachloroethane	ND	mg / Kg	1	0.005	10/16/00
X00398	XG.2000.1206-4	630-20-6	1,1,1,2 Tetrachloroethane	ND	mg / Kg	1	0.005	10/16/
X00398	XG.2000.1158-5	79-00-5	1,1,2 Trichloroethane	ND	mg / Kg	1	0.005	10/16/

Quality Control Summary

Client: CH2MHILL

Project: 0010155 KAFB BULK FUEL FAC(ST106)

Explanation of codes

D	*Not applicable due to sample dilution*
L	*Not applicable due to MDL proximity*

X00398	XG.2000.1206-4	79-00-5	1,1,2 Trichloroethane	ND	mg / Kg	1	0.005	10/16/00
X00398	XG.2000.1158-5	79-34-5	1,1,2,2 Tetrachloroethane	ND	mg / Kg	1	0.005	10/16/00
X00398	XG.2000.1206-4	79-34-5	1,1,2,2 Tetrachloroethane	ND	mg / Kg	1	0.005	10/16/00
X00398	XG.2000.1158-5	106-93-4	1,2 Dibromoethane (EDB)	ND	mg / Kg	1	0.005	10/16/00
X00398	XG.2000.1206-4	106-93-4	1,2 Dibromoethane (EDB)	ND	mg / Kg	1	0.005	10/16/00
X00398	XG.2000.1158-5	95-50-1	1,2 Dichlorobenzene	ND	mg / Kg	1	0.005	10/16/00
X00398	XG.2000.1206-4	95-50-1	1,2 Dichlorobenzene	ND	mg / Kg	1	0.005	10/16/00
X00398	XG.2000.1158-5	107-06-2	1,2 Dichloroethane	ND	mg / Kg	1	0.005	10/16/00
X00398	XG.2000.1206-4	107-06-2	1,2 Dichloroethane	ND	mg / Kg	1	0.005	10/16/00
X00398	XG.2000.1158-5	78-87-5	1,2 Dichloropropane	ND	mg / Kg	1	0.005	10/16/00
X00398	XG.2000.1206-4	78-87-5	1,2 Dichloropropane	ND	mg / Kg	1	0.005	10/16/00
X00398	XG.2000.1158-5	96-18-4	1,2,3 Trichloropropane	ND	mg / Kg	1	0.005	10/16/00
X00398	XG.2000.1206-4	96-18-4	1,2,3 Trichloropropane	ND	mg / Kg	1	0.005	10/16/00
X00398	XG.2000.1158-5	95-63-6	1,2,4-Trimethylbenzene	ND	mg / Kg	1	0.005	10/16/00
X00398	XG.2000.1206-4	95-63-6	1,2,4-Trimethylbenzene	ND	mg / Kg	1	0.005	10/16/00
X00398	XG.2000.1158-5	541-73-1	1,3 Dichlorobenzene	ND	mg / Kg	1	0.005	10/16/00
X00398	XG.2000.1206-4	541-73-1	1,3 Dichlorobenzene	ND	mg / Kg	1	0.005	10/16/00
X00398	XG.2000.1158-5	108-67-8	1,3,5-Trimethylbenzene	ND	mg / Kg	1	0.005	10/16/00
X00398	XG.2000.1206-4	108-67-8	1,3,5-Trimethylbenzene	ND	mg / Kg	1	0.005	10/16/00
X00398	XG.2000.1158-5	764-41-0	1,4 Dichloro-2-butene	ND	mg / Kg	1	0.05	10/16/00
X00398	XG.2000.1206-4	764-41-0	1,4 Dichloro-2-butene	ND	mg / Kg	1	0.05	10/16/00
X00398	XG.2000.1158-5	106-46-7	1,4 Dichlorobenzene	ND	mg / Kg	1	0.005	10/16/00
X00398	XG.2000.1206-4	106-46-7	1,4 Dichlorobenzene	ND	mg / Kg	1	0.005	10/16/00
[illegible]8	XG.2000.1158-5	78-93-3	2-Butanone (MEK)	ND	mg / Kg	1	0.025	10/16/00
[illegible]8	XG.2000.1206-4	78-93-3	2-Butanone (MEK)	ND	mg / Kg	1	0.025	10/16/00
X00398	XG.2000.1158-5	110-75-8	2-Chloroethylvinylether	ND	mg / Kg	1	0.025	10/16/00
X00398	XG.2000.1206-4	110-75-8	2-Chloroethylvinylether	ND	mg / Kg	1	0.025	10/16/00
X00398	XG.2000.1158-5	591-78-6	2-Hexanone (MBK)	ND	mg / Kg	1	0.025	10/16/00
X00398	XG.2000.1206-4	591-78-6	2-Hexanone (MBK)	ND	mg / Kg	1	0.025	10/16/00
X00398	XG.2000.1158-5	108-10-1	4-Methyl-2-pentanone (MIBK)	ND	mg / Kg	1	0.025	10/16/00
X00398	XG.2000.1206-4	108-10-1	4-Methyl-2-pentanone (MIBK)	ND	mg / Kg	1	0.025	10/16/00
X00398	XG.2000.1158-5	67-64-1	Acetone	ND	mg / Kg	1	0.05	10/16/00
X00398	XG.2000.1206-4	67-64-1	Acetone	ND	mg / Kg	1	0.05	10/16/00
X00398	XG.2000.1158-5	107-02-8	Acrolein	ND	mg / Kg	1	0.1	10/16/00
X00398	XG.2000.1206-4	107-02-8	Acrolein	ND	mg / Kg	1	0.1	10/16/00
X00398	XG.2000.1158-5	107-13-1	Acrylonitrile	ND	mg / Kg	1	0.1	10/16/00
X00398	XG.2000.1206-4	107-13-1	Acrylonitrile	ND	mg / Kg	1	0.1	10/16/00
X00398	XG.2000.1158-5	71-43-2	Benzene	ND	mg / Kg	1	0.005	10/16/00
X00398	XG.2000.1206-4	71-43-2	Benzene	ND	mg / Kg	1	0.005	10/16/00
X00398	XG.2000.1158-5	75-27-4	Bromodichloromethane	ND	mg / Kg	1	0.005	10/16/00
X00398	XG.2000.1206-4	75-27-4	Bromodichloromethane	ND	mg / Kg	1	0.005	10/16/00
X00398	XG.2000.1158-5	75-25-2	Bromoform	ND	mg / Kg	1	0.005	10/16/00
X00398	XG.2000.1206-4	75-25-2	Bromoform	ND	mg / Kg	1	0.005	10/16/00
X00398	XG.2000.1158-5	74-83-9	Bromomethane	ND	mg / Kg	1	0.025	10/16/00
X00398	XG.2000.1206-4	74-83-9	Bromomethane	ND	mg / Kg	1	0.025	10/16/00
X00398	XG.2000.1158-5	75-15-0	Carbon disulfide	ND	mg / Kg	1	0.025	10/16/00
X00398	XG.2000.1206-4	75-15-0	Carbon disulfide	ND	mg / Kg	1	0.025	10/16/00
X00398	XG.2000.1158-5	56-23-5	Carbon tetrachloride	ND	mg / Kg	1	0.005	10/16/00
X00398	XG.2000.1206-4	56-23-5	Carbon tetrachloride	ND	mg / Kg	1	0.005	10/16/00
[illegible]98	XG.2000.1158-5	108-90-7	Chlorobenzene	ND	mg / Kg	1	0.005	10/16/00
[illegible]398	XG.2000.1206-4	108-90-7	Chlorobenzene	ND	mg / Kg	1	0.005	10/16/00

Quality Control Summary

Client: **CH2MHILL**

Project: **0010155** **KAFB BULK FUEL FAC(ST106)**

Explanation of codes

D *Not applicable due to sample dilut*

L *Not applicable due to MDL proxim*

X00398	XG.2000.1158-5	124-48-1	Chlorodibromomethane	ND	mg / Kg	1	0.005	10/16/0
X00398	XG.2000.1206-4	124-48-1	Chlorodibromomethane	ND	mg / Kg	1	0.005	10/16/0
X00398	XG.2000.1158-5	75-00-3	Chloroethane	ND	mg / Kg	1	0.025	10/16/0
X00398	XG.2000.1206-4	75-00-3	Chloroethane	ND	mg / Kg	1	0.025	10/16/0
X00398	XG.2000.1158-5	67-66-3	Chloroform	ND	mg / Kg	1	0.005	10/16/0
X00398	XG.2000.1206-4	67-66-3	Chloroform	ND	mg / Kg	1	0.005	10/16/0
X00398	XG.2000.1158-5	74-87-3	Chloromethane	ND	mg / Kg	1	0.025	10/16/0
X00398	XG.2000.1206-4	74-87-3	Chloromethane	ND	mg / Kg	1	0.025	10/16/0
X00398	XG.2000.1158-5	156-59-2	cis-1,2 dichloroethene	ND	mg / Kg	1	0.005	10/16/0
X00398	XG.2000.1206-4	156-59-2	cis-1,2 dichloroethene	ND	mg / Kg	1	0.005	10/16/0
X00398	XG.2000.1158-5	10061-01-5	cis-1,3 dichloropropene	ND	mg / Kg	1	0.005	10/16/0
X00398	XG.2000.1206-4	10061-01-5	cis-1,3 dichloropropene	ND	mg / Kg	1	0.005	10/16/0
X00398	XG.2000.1158-5	74-95-3	Dibromomethane	ND	mg / Kg	1	0.005	10/16/0
X00398	XG.2000.1206-4	74-95-3	Dibromomethane	ND	mg / Kg	1	0.005	10/16/0
X00398	XG.2000.1158-5	97-63-2	Ethyl methacrylate	ND	mg / Kg	1	0.025	10/16/0
X00398	XG.2000.1206-4	97-63-2	Ethyl methacrylate	ND	mg / Kg	1	0.025	10/16/0
X00398	XG.2000.1158-5	100-41-4	Ethylbenzene	ND	mg / Kg	1	0.005	10/16/0
X00398	XG.2000.1206-4	100-41-4	Ethylbenzene	ND	mg / Kg	1	0.005	10/16/0
X00398	XG.2000.1158-5		Freon 113	ND	mg / Kg	1	0.025	10/16/0
X00398	XG.2000.1206-4		Freon 113	ND	mg / Kg	1	0.025	10/16/0
X00398	XG.2000.1158-5	75-71-8	Freon 12	ND	mg / Kg	1	0.05	10/16/0
X00398	XG.2000.1206-4	75-71-8	Freon 12	ND	mg / Kg	1	0.05	10/16/0
X00398	XG.2000.1158-5	74-88-4	Iodomethane	ND	mg / Kg	1	0.025	10/16/0
X00398	XG.2000.1206-4	74-88-4	Iodomethane	ND	mg / Kg	1	0.025	10/16
X00398	XG.2000.1158-5	1634-04-4	Methyl t-butyl ether (MTBE)	ND	mg / Kg	1	0.005	10/16
X00398	XG.2000.1206-4	1634-04-4	Methyl t-butyl ether (MTBE)	ND	mg / Kg	1	0.005	10/16/0
X00398	XG.2000.1158-5	75-09-2	Methylene chloride	ND	mg / Kg	1	0.05	10/16/0
X00398	XG.2000.1206-4	75-09-2	Methylene chloride	ND	mg / Kg	1	0.05	10/16/0
X00398	XG.2000.1158-5	91-20-3	Naphthalene	ND	mg / Kg	1	0.025	10/16/0
X00398	XG.2000.1206-4	91-20-3	Naphthalene	ND	mg / Kg	1	0.025	10/16/0
X00398	XG.2000.1158-5	95-47-6	o-Xylene	ND	mg / Kg	1	0.005	10/16/0
X00398	XG.2000.1206-4	95-47-6	o-Xylene	ND	mg / Kg	1	0.005	10/16/0
X00398	XG.2000.1158-5	108-38-3/106-42	p/m Xylenes	ND	mg / Kg	1	0.01	10/16/0
X00398	XG.2000.1206-4	108-38-3/106-42	p/m Xylenes	ND	mg / Kg	1	0.01	10/16/0
X00398	XG.2000.1158-5	100-42-5	Styrene	ND	mg / Kg	1	0.005	10/16/0
X00398	XG.2000.1206-4	100-42-5	Styrene	ND	mg / Kg	1	0.005	10/16/0
X00398	XG.2000.1158-5	156-60-5	t-1,2 Dichloroethene	ND	mg / Kg	1	0.005	10/16/0
X00398	XG.2000.1206-4	156-60-5	t-1,2 Dichloroethene	ND	mg / Kg	1	0.005	10/16/0
X00398	XG.2000.1158-5	10061-02-6	t-1,3 Dichloropropene	ND	mg / Kg	1	0.005	10/16/0
X00398	XG.2000.1206-4	10061-02-6	t-1,3 Dichloropropene	ND	mg / Kg	1	0.005	10/16/0
X00398	XG.2000.1158-5	127-18-4	Tetrachloroethene	ND	mg / Kg	1	0.005	10/16/0
X00398	XG.2000.1206-4	127-18-4	Tetrachloroethene	ND	mg / Kg	1	0.005	10/16/0
X00398	XG.2000.1158-5	108-88-3	Toluene	ND	mg / Kg	1	0.005	10/16/0
X00398	XG.2000.1206-4	108-88-3	Toluene	ND	mg / Kg	1	0.005	10/16/0
X00398	XG.2000.1158-5	79-01-6	Trichloroethene	ND	mg / Kg	1	0.005	10/16/0
X00398	XG.2000.1206-4	79-01-6	Trichloroethene	ND	mg / Kg	1	0.005	10/16/0
X00398	XG.2000.1158-5	75-69-4	Trichlorofluoromethane	ND	mg / Kg	1	0.025	10/16/0
X00398	XG.2000.1206-4	75-69-4	Trichlorofluoromethane	ND	mg / Kg	1	0.025	10/16/0
X00398	XG.2000.1158-5	108-05-4	Vinyl acetate	ND	mg / Kg	1	0.025	10/16

Quality Control Summary

Explanation of codes

D *Not applicable due to sample dilution*

L *Not applicable due to MDL proximity*

nt: CH2MHILL

ject: 0010155 KAFB BULK FUEL FAC(ST106)

X00398	XG.2000.1206-4	108-05-4	Vinyl acetate	ND	mg / Kg	1	0.025	10/16/00
X00398	XG.2000.1158-5	75-01-4	Vinyl chloride	ND	mg / Kg	1	0.025	10/16/00
X00398	XG.2000.1206-4	75-01-4	Vinyl chloride	ND	mg / Kg	1	0.025	10/16/00
X00398-018		**SW846 8260A Purgeable VOCs by GC/MS**						
X00398	XG.2000.1158-12	75-34-3	1,1 Dichloroethane	ND	mg / Kg	1	0.005	10/17/00
X00398	XG.2000.1205-1	75-34-3	1,1 Dichloroethane	ND	mg / Kg	1	0.005	10/17/00
X00398	XG.2000.1206-7	75-34-3	1,1 Dichloroethane	ND	mg / Kg	1	0.005	10/17/00
X00398	XG.2000.1158-12	75-34-3	1,1 Dichloroethene	ND	mg / Kg	1	0.005	10/17/00
X00398	XG.2000.1205-1	75-34-3	1,1 Dichloroethene	ND	mg / Kg	1	0.005	10/17/00
X00398	XG.2000.1206-7	75-34-3	1,1 Dichloroethene	ND	mg / Kg	1	0.005	10/17/00
X00398	XG.2000.1158-12	71-55-6	1,1,1 Trichloroethane	ND	mg / Kg	1	0.005	10/17/00
X00398	XG.2000.1205-1	71-55-6	1,1,1 Trichloroethane	ND	mg / Kg	1	0.005	10/17/00
X00398	XG.2000.1206-7	71-55-6	1,1,1 Trichloroethane	ND	mg / Kg	1	0.005	10/17/00
X00398	XG.2000.1158-12	630-20-6	1,1,1,2 Tetrachloroethane	ND	mg / Kg	1	0.005	10/17/00
X00398	XG.2000.1205-1	630-20-6	1,1,1,2 Tetrachloroethane	ND	mg / Kg	1	0.005	10/17/00
X00398	XG.2000.1206-7	630-20-6	1,1,1,2 Tetrachloroethane	ND	mg / Kg	1	0.005	10/17/00
X00398	XG.2000.1158-12	79-00-5	1,1,2 Trichloroethane	ND	mg / Kg	1	0.005	10/17/00
X00398	XG.2000.1205-1	79-00-5	1,1,2 Trichloroethane	ND	mg / Kg	1	0.005	10/17/00
X00398	XG.2000.1206-7	79-00-5	1,1,2 Trichloroethane	ND	mg / Kg	1	0.005	10/17/00
X00398	XG.2000.1158-12	79-34-5	1,1,2,2 Tetrachloroethane	ND	mg / Kg	1	0.005	10/17/00
X00398	XG.2000.1205-1	79-34-5	1,1,2,2 Tetrachloroethane	ND	mg / Kg	1	0.005	10/17/00
X00398	XG.2000.1206-7	79-34-5	1,1,2,2 Tetrachloroethane	ND	mg / Kg	1	0.005	10/17/00
X00398	XG.2000.1158-12	106-93-4	1,2 Dibromoethane (EDB)	ND	mg / Kg	1	0.005	10/17/00
X00398	XG.2000.1205-1	106-93-4	1,2 Dibromoethane (EDB)	ND	mg / Kg	1	0.005	10/17/00
X00398	XG.2000.1206-7	106-93-4	1,2 Dibromoethane (EDB)	ND	mg / Kg	1	0.005	10/17/00
X00398	XG.2000.1158-12	95-50-1	1,2 Dichlorobenzene	ND	mg / Kg	1	0.005	10/17/00
X00398	XG.2000.1205-1	95-50-1	1,2 Dichlorobenzene	ND	mg / Kg	1	0.005	10/17/00
X00398	XG.2000.1206-7	95-50-1	1,2 Dichlorobenzene	ND	mg / Kg	1	0.005	10/17/00
X00398	XG.2000.1158-12	107-06-2	1,2 Dichloroethane	ND	mg / Kg	1	0.005	10/17/00
X00398	XG.2000.1205-1	107-06-2	1,2 Dichloroethane	ND	mg / Kg	1	0.005	10/17/00
X00398	XG.2000.1206-7	107-06-2	1,2 Dichloroethane	ND	mg / Kg	1	0.005	10/17/00
X00398	XG.2000.1158-12	78-87-5	1,2 Dichloropropane	ND	mg / Kg	1	0.005	10/17/00
X00398	XG.2000.1205-1	78-87-5	1,2 Dichloropropane	ND	mg / Kg	1	0.005	10/17/00
X00398	XG.2000.1206-7	78-87-5	1,2 Dichloropropane	ND	mg / Kg	1	0.005	10/17/00
X00398	XG.2000.1158-12	96-18-4	1,2,3 Trichloropropane	ND	mg / Kg	1	0.005	10/17/00
X00398	XG.2000.1205-1	96-18-4	1,2,3 Trichloropropane	ND	mg / Kg	1	0.005	10/17/00
X00398	XG.2000.1206-7	96-18-4	1,2,3 Trichloropropane	ND	mg / Kg	1	0.005	10/17/00
X00398	XG.2000.1158-12	95-63-6	1,2,4-Trimethylbenzene	ND	mg / Kg	1	0.005	10/17/00
X00398	XG.2000.1205-1	95-63-6	1,2,4-Trimethylbenzene	ND	mg / Kg	1	0.005	10/17/00
X00398	XG.2000.1206-7	95-63-6	1,2,4-Trimethylbenzene	ND	mg / Kg	1	0.005	10/17/00
X00398	XG.2000.1158-12	541-73-1	1,3 Dichlorobenzene	ND	mg / Kg	1	0.005	10/17/00
X00398	XG.2000.1205-1	541-73-1	1,3 Dichlorobenzene	ND	mg / Kg	1	0.005	10/17/00
X00398	XG.2000.1206-7	541-73-1	1,3 Dichlorobenzene	ND	mg / Kg	1	0.005	10/17/00
X00398	XG.2000.1158-12	108-67-8	1,3,5-Trimethylbenzene	ND	mg / Kg	1	0.005	10/17/00
X00398	XG.2000.1205-1	108-67-8	1,3,5-Trimethylbenzene	ND	mg / Kg	1	0.005	10/17/00
X00398	XG.2000.1206-7	108-67-8	1,3,5-Trimethylbenzene	ND	mg / Kg	1	0.005	10/17/00
X00398	XG.2000.1158-12	764-41-0	1,4 Dichloro-2-butene	ND	mg / Kg	1	0.05	10/17/00
X00398	XG.2000.1205-1	764-41-0	1,4 Dichloro-2-butene	ND	mg / Kg	1	0.05	10/17/00
X00398	XG.2000.1206-7	764-41-0	1,4 Dichloro-2-butene	ND	mg / Kg	1	0.05	10/17/00
X00398	XG.2000.1158-12	106-46-7	1,4 Dichlorobenzene	ND	mg / Kg	1	0.005	10/17/00

Quality Control Summary

Client: CH2MHILL

Project: 0010155 KAFB BULK FUEL FAC(ST106)

Explanation of codes

D *Not applicable due to sample dil*

L *Not applicable due to MDL proximity*

X00398	XG.2000.1205-1	106-46-7	1,4 Dichlorobenzene	ND	mg / Kg	1	0.005	10/17/00
X00398	XG.2000.1206-7	106-46-7	1,4 Dichlorobenzene	ND	mg / Kg	1	0.005	10/17/00
X00398	XG.2000.1158-12	78-93-3	2-Butanone (MEK)	ND	mg / Kg	1	0.025	10/17/00
X00398	XG.2000.1205-1	78-93-3	2-Butanone (MEK)	ND	mg / Kg	1	0.025	10/17/00
X00398	XG.2000.1206-7	78-93-3	2-Butanone (MEK)	ND	mg / Kg	1	0.025	10/17/00
X00398	XG.2000.1158-12	110-75-8	2-Chloroethylvinylether	ND	mg / Kg	1	0.025	10/17/00
X00398	XG.2000.1205-1	110-75-8	2-Chloroethylvinylether	ND	mg / Kg	1	0.025	10/17/00
X00398	XG.2000.1206-7	110-75-8	2-Chloroethylvinylether	ND	mg / Kg	1	0.025	10/17/00
X00398	XG.2000.1158-12	591-78-6	2-Hexanone (MBK)	ND	mg / Kg	1	0.025	10/17/00
X00398	XG.2000.1205-1	591-78-6	2-Hexanone (MBK)	ND	mg / Kg	1	0.025	10/17/00
X00398	XG.2000.1206-7	591-78-6	2-Hexanone (MBK)	ND	mg / Kg	1	0.025	10/17/00
X00398	XG.2000.1158-12	108-10-1	4-Methyl-2-pentanone (MIBK)	ND	mg / Kg	1	0.025	10/17/00
X00398	XG.2000.1205-1	108-10-1	4-Methyl-2-pentanone (MIBK)	ND	mg / Kg	1	0.025	10/17/00
X00398	XG.2000.1206-7	108-10-1	4-Methyl-2-pentanone (MIBK)	ND	mg / Kg	1	0.025	10/17/00
X00398	XG.2000.1158-12	67-64-1	Acetone	ND	mg / Kg	1	0.05	10/17/00
X00398	XG.2000.1205-1	67-64-1	Acetone	ND	mg / Kg	1	0.05	10/17/00
X00398	XG.2000.1206-7	67-64-1	Acetone	ND	mg / Kg	1	0.05	10/17/00
X00398	XG.2000.1158-12	107-02-8	Acrolein	ND	mg / Kg	1	0.1	10/17/00
X00398	XG.2000.1205-1	107-02-8	Acrolein	ND	mg / Kg	1	0.1	10/17/00
X00398	XG.2000.1206-7	107-02-8	Acrolein	ND	mg / Kg	1	0.1	10/17/00
X00398	XG.2000.1158-12	107-13-1	Acrylonitrile	ND	mg / Kg	1	0.1	10/17/00
X00398	XG.2000.1205-1	107-13-1	Acrylonitrile	ND	mg / Kg	1	0.1	10/17/00
X00398	XG.2000.1206-7	107-13-1	Acrylonitrile	ND	mg / Kg	1	0.1	10/17/00
X00398	XG.2000.1158-12	71-43-2	Benzene	ND	mg / Kg	1	0.005	10/1
X00398	XG.2000.1205-1	71-43-2	Benzene	ND	mg / Kg	1	0.005	10/17/00
X00398	XG.2000.1206-7	71-43-2	Benzene	ND	mg / Kg	1	0.005	10/17/00
X00398	XG.2000.1158-12	75-27-4	Bromodichloromethane	ND	mg / Kg	1	0.005	10/17/00
X00398	XG.2000.1205-1	75-27-4	Bromodichloromethane	ND	mg / Kg	1	0.005	10/17/00
X00398	XG.2000.1206-7	75-27-4	Bromodichloromethane	ND	mg / Kg	1	0.005	10/17/00
X00398	XG.2000.1158-12	75-25-2	Bromoform	ND	mg / Kg	1	0.005	10/17/00
X00398	XG.2000.1205-1	75-25-2	Bromoform	ND	mg / Kg	1	0.005	10/17/00
X00398	XG.2000.1206-7	75-25-2	Bromoform	ND	mg / Kg	1	0.005	10/17/00
X00398	XG.2000.1158-12	74-83-9	Bromomethane	ND	mg / Kg	1	0.025	10/17/00
X00398	XG.2000.1205-1	74-83-9	Bromomethane	ND	mg / Kg	1	0.025	10/17/00
X00398	XG.2000.1206-7	74-83-9	Bromomethane	ND	mg / Kg	1	0.025	10/17/00
X00398	XG.2000.1158-12	75-15-0	Carbon disulfide	ND	mg / Kg	1	0.025	10/17/00
X00398	XG.2000.1205-1	75-15-0	Carbon disulfide	ND	mg / Kg	1	0.025	10/17/00
X00398	XG.2000.1206-7	75-15-0	Carbon disulfide	ND	mg / Kg	1	0.025	10/17/00
X00398	XG.2000.1158-12	56-23-5	Carbon tetrachloride	ND	mg / Kg	1	0.005	10/17/00
X00398	XG.2000.1205-1	56-23-5	Carbon tetrachloride	ND	mg / Kg	1	0.005	10/17/00
X00398	XG.2000.1206-7	56-23-5	Carbon tetrachloride	ND	mg / Kg	1	0.005	10/17/00
X00398	XG.2000.1158-12	108-90-7	Chlorobenzene	ND	mg / Kg	1	0.005	10/17/00
X00398	XG.2000.1205-1	108-90-7	Chlorobenzene	ND	mg / Kg	1	0.005	10/17/00
X00398	XG.2000.1206-7	108-90-7	Chlorobenzene	ND	mg / Kg	1	0.005	10/17/00
X00398	XG.2000.1158-12	124-48-1	Chlorodibromomethane	ND	mg / Kg	1	0.005	10/17/00
X00398	XG.2000.1205-1	124-48-1	Chlorodibromomethane	ND	mg / Kg	1	0.005	10/17/00
X00398	XG.2000.1206-7	124-48-1	Chlorodibromomethane	ND	mg / Kg	1	0.005	10/17/00
X00398	XG.2000.1158-12	75-00-3	Chloroethane	ND	mg / Kg	1	0.025	10/17/00
X00398	XG.2000.1205-1	75-00-3	Chloroethane	ND	mg / Kg	1	0.025	10/17
X00398	XG.2000.1206-7	75-00-3	Chloroethane	ND	mg / Kg	1	0.025	10/1
X00398	XG.2000.1158-12	67-66-3	Chloroform	ND	mg / Kg	1	0.005	10/17/00

Quality Control Summary

Client: CH2MHILL

ct: 0010155 KAFB BULK FUEL FAC(ST106)

Explanation of codes

D *Not applicable due to sample dilution*

L *Not applicable due to MDL proximity*

X00398	XG.2000.1205-1	67-66-3	Chloroform	ND	mg / Kg	1	0.005	10/17/00
X00398	XG.2000.1206-7	67-66-3	Chloroform	ND	mg / Kg	1	0.005	10/17/00
X00398	XG.2000.1158-12	74-87-3	Chloromethane	ND	mg / Kg	1	0.025	10/17/00
X00398	XG.2000.1205-1	74-87-3	Chloromethane	ND	mg / Kg	1	0.025	10/17/00
X00398	XG.2000.1206-7	74-87-3	Chloromethane	ND	mg / Kg	1	0.025	10/17/00
X00398	XG.2000.1158-12	156-59-2	cis-1,2 dichloroethene	ND	mg / Kg	1	0.005	10/17/00
X00398	XG.2000.1205-1	156-59-2	cis-1,2 dichloroethene	ND	mg / Kg	1	0.005	10/17/00
X00398	XG.2000.1206-7	156-59-2	cis-1,2 dichloroethene	ND	mg / Kg	1	0.005	10/17/00
X00398	XG.2000.1158-12	10061-01-5	cis-1,3 dichloropropene	ND	mg / Kg	1	0.005	10/17/00
X00398	XG.2000.1205-1	10061-01-5	cis-1,3 dichloropropene	ND	mg / Kg	1	0.005	10/17/00
X00398	XG.2000.1206-7	10061-01-5	cis-1,3 dichloropropene	ND	mg / Kg	1	0.005	10/17/00
X00398	XG.2000.1158-12	74-95-3	Dibromomethane	ND	mg / Kg	1	0.005	10/17/00
X00398	XG.2000.1205-1	74-95-3	Dibromomethane	ND	mg / Kg	1	0.005	10/17/00
X00398	XG.2000.1206-7	74-95-3	Dibromomethane	ND	mg / Kg	1	0.005	10/17/00
X00398	XG.2000.1158-12	97-63-2	Ethyl methacrylate	ND	mg / Kg	1	0.025	10/17/00
X00398	XG.2000.1205-1	97-63-2	Ethyl methacrylate	ND	mg / Kg	1	0.025	10/17/00
X00398	XG.2000.1206-7	97-63-2	Ethyl methacrylate	ND	mg / Kg	1	0.025	10/17/00
X00398	XG.2000.1158-12	100-41-4	Ethylbenzene	ND	mg / Kg	1	0.005	10/17/00
X00398	XG.2000.1205-1	100-41-4	Ethylbenzene	ND	mg / Kg	1	0.005	10/17/00
X00398	XG.2000.1206-7	100-41-4	Ethylbenzene	ND	mg / Kg	1	0.005	10/17/00
X00398	XG.2000.1158-12		Freon 113	ND	mg / Kg	1	0.025	10/17/00
X00398	XG.2000.1205-1		Freon 113	ND	mg / Kg	1	0.025	10/17/00
X00398	XG.2000.1206-7		Freon 113	ND	mg / Kg	1	0.025	10/17/00
X[illegible]8	XG.2000.1158-12	75-71-8	Freon 12	ND	mg / Kg	1	0.05	10/17/00
[illegible]3	XG.2000.1205-1	75-71-8	Freon 12	ND	mg / Kg	1	0.05	10/17/00
X00398	XG.2000.1206-7	75-71-8	Freon 12	ND	mg / Kg	1	0.05	10/17/00
X00398	XG.2000.1158-12	74-88-4	Iodomethane	ND	mg / Kg	1	0.025	10/17/00
X00398	XG.2000.1205-1	74-88-4	Iodomethane	ND	mg / Kg	1	0.025	10/17/00
X00398	XG.2000.1206-7	74-88-4	Iodomethane	ND	mg / Kg	1	0.025	10/17/00
X00398	XG.2000.1158-12	1634-04-4	Methyl t-butyl ether (MTBE)	ND	mg / Kg	1	0.005	10/17/00
X00398	XG.2000.1205-1	1634-04-4	Methyl t-butyl ether (MTBE)	ND	mg / Kg	1	0.005	10/17/00
X00398	XG.2000.1206-7	1634-04-4	Methyl t-butyl ether (MTBE)	ND	mg / Kg	1	0.005	10/17/00
X00398	XG.2000.1158-12	75-09-2	Methylene chloride	ND	mg / Kg	1	0.05	10/17/00
X00398	XG.2000.1205-1	75-09-2	Methylene chloride	ND	mg / Kg	1	0.05	10/17/00
X00398	XG.2000.1206-7	75-09-2	Methylene chloride	ND	mg / Kg	1	0.05	10/17/00
X00398	XG.2000.1158-12	91-20-3	Naphthalene	ND	mg / Kg	1	0.025	10/17/00
X00398	XG.2000.1205-1	91-20-3	Naphthalene	ND	mg / Kg	1	0.025	10/17/00
X00398	XG.2000.1206-7	91-20-3	Naphthalene	ND	mg / Kg	1	0.025	10/17/00
X00398	XG.2000.1158-12	95-47-6	o-Xylene	ND	mg / Kg	1	0.005	10/17/00
X00398	XG.2000.1205-1	95-47-6	o-Xylene	ND	mg / Kg	1	0.005	10/17/00
X00398	XG.2000.1206-7	95-47-6	o-Xylene	ND	mg / Kg	1	0.005	10/17/00
X00398	XG.2000.1158-12	108-38-3/106-42	p/m Xylenes	ND	mg / Kg	1	0.01	10/17/00
X00398	XG.2000.1205-1	108-38-3/106-42	p/m Xylenes	ND	mg / Kg	1	0.01	10/17/00
X00398	XG.2000.1206-7	108-38-3/106-42	p/m Xylenes	ND	mg / Kg	1	0.01	10/17/00
X00398	XG.2000.1158-12	100-42-5	Styrene	ND	mg / Kg	1	0.005	10/17/00
X00398	XG.2000.1205-1	100-42-5	Styrene	ND	mg / Kg	1	0.005	10/17/00
X00398	XG.2000.1206-7	100-42-5	Styrene	ND	mg / Kg	1	0.005	10/17/00
X[illegible]98	XG.2000.1158-12	156-60-5	t-1,2 Dichloroethene	ND	mg / Kg	1	0.005	10/17/00
[illegible]3	XG.2000.1205-1	156-60-5	t-1,2 Dichloroethene	ND	mg / Kg	1	0.005	10/17/00

Quality Control Summary

Client: CH2MHILL

Project: 0010155 KAFB BULK FUEL FAC(ST106)

Explanation of codes

D *Not applicable due to sample dilut*

L *Not applicable due to MDL proximity*

X00398	XG.2000.1206-7	156-60-5	t-1,2 Dichloroethene	ND	mg / Kg	1	0.005	10/17/0
X00398	XG.2000.1158-12	10061-02-6	t-1,3 Dichloropropene	ND	mg / Kg	1	0.005	10/17/0
X00398	XG.2000.1205-1	10061-02-6	t-1,3 Dichloropropene	ND	mg / Kg	1	0.005	10/17/0
X00398	XG.2000.1206-7	10061-02-6	t-1,3 Dichloropropene	ND	mg / Kg	1	0.005	10/17/0
X00398	XG.2000.1158-12	127-18-4	Tetrachloroethene	ND	mg / Kg	1	0.005	10/17/0
X00398	XG.2000.1205-1	127-18-4	Tetrachloroethene	ND	mg / Kg	1	0.005	10/17/0
X00398	XG.2000.1206-7	127-18-4	Tetrachloroethene	ND	mg / Kg	1	0.005	10/17/0
X00398	XG.2000.1158-12	108-88-3	Toluene	ND	mg / Kg	1	0.005	10/17/0
X00398	XG.2000.1205-1	108-88-3	Toluene	ND	mg / Kg	1	0.005	10/17/0
X00398	XG.2000.1206-7	108-88-3	Toluene	ND	mg / Kg	1	0.005	10/17/0
X00398	XG.2000.1158-12	79-01-6	Trichloroethene	ND	mg / Kg	1	0.005	10/17/0
X00398	XG.2000.1205-1	79-01-6	Trichloroethene	ND	mg / Kg	1	0.005	10/17/0
X00398	XG.2000.1206-7	79-01-6	Trichloroethene	ND	mg / Kg	1	0.005	10/17/0
X00398	XG.2000.1158-12	75-69-4	Trichlorofluoromethane	ND	mg / Kg	1	0.025	10/17/0
X00398	XG.2000.1205-1	75-69-4	Trichlorofluoromethane	ND	mg / Kg	1	0.025	10/17/0
X00398	XG.2000.1206-7	75-69-4	Trichlorofluoromethane	ND	mg / Kg	1	0.025	10/17/00
X00398	XG.2000.1158-12	108-05-4	Vinyl acetate	ND	mg / Kg	1	0.025	10/17/00
X00398	XG.2000.1205-1	108-05-4	Vinyl acetate	ND	mg / Kg	1	0.025	10/17/00
X00398	XG.2000.1206-7	108-05-4	Vinyl acetate	ND	mg / Kg	1	0.025	10/17/00
X00398	XG.2000.1158-12	75-01-4	Vinyl chloride	ND	mg / Kg	1	0.025	10/17/00
X00398	XG.2000.1205-1	75-01-4	Vinyl chloride	ND	mg / Kg	1	0.025	10/17/00
X00398	XG.2000.1206-7	75-01-4	Vinyl chloride	ND	mg / Kg	1	0.025	10/17/00
X00398-028		**SW846 8260A Purgeable VOCs by GC/MS**						
X00398	XG.2000.1205-3	75-34-3	1,1 Dichloroethane	ND	mg / Kg	1	0.005	10/26/
X00398	XG.2000.1206-9	75-34-3	1,1 Dichloroethane	ND	mg / Kg	1	0.005	10/26/00
X00398	XG.2000.1205-3	75-34-3	1,1 Dichloroethene	ND	mg / Kg	1	0.005	10/26/00
X00398	XG.2000.1206-9	75-34-3	1,1 Dichloroethene	ND	mg / Kg	1	0.005	10/26/00
X00398	XG.2000.1205-3	71-55-6	1,1,1 Trichloroethane	ND	mg / Kg	1	0.005	10/26/00
X00398	XG.2000.1206-9	71-55-6	1,1,1 Trichloroethane	ND	mg / Kg	1	0.005	10/26/00
X00398	XG.2000.1205-3	630-20-6	1,1,1,2 Tetrachloroethane	ND	mg / Kg	1	0.005	10/26/00
X00398	XG.2000.1206-9	630-20-6	1,1,1,2 Tetrachloroethane	ND	mg / Kg	1	0.005	10/26/00
X00398	XG.2000.1205-3	79-00-5	1,1,2 Trichloroethane	ND	mg / Kg	1	0.005	10/26/00
X00398	XG.2000.1206-9	79-00-5	1,1,2 Trichloroethane	ND	mg / Kg	1	0.005	10/26/00
X00398	XG.2000.1205-3	79-34-5	1,1,2,2 Tetrachloroethane	ND	mg / Kg	1	0.005	10/26/00
X00398	XG.2000.1206-9	79-34-5	1,1,2,2 Tetrachloroethane	ND	mg / Kg	1	0.005	10/26/00
X00398	XG.2000.1205-3	106-93-4	1,2 Dibromoethane (EDB)	ND	mg / Kg	1	0.005	10/26/00
X00398	XG.2000.1206-9	106-93-4	1,2 Dibromoethane (EDB)	ND	mg / Kg	1	0.005	10/26/00
X00398	XG.2000.1205-3	95-50-1	1,2 Dichlorobenzene	ND	mg / Kg	1	0.005	10/26/00
X00398	XG.2000.1206-9	95-50-1	1,2 Dichlorobenzene	ND	mg / Kg	1	0.005	10/26/00
X00398	XG.2000.1205-3	107-06-2	1,2 Dichloroethane	ND	mg / Kg	1	0.005	10/26/00
X00398	XG.2000.1206-9	107-06-2	1,2 Dichloroethane	ND	mg / Kg	1	0.005	10/26/00
X00398	XG.2000.1205-3	78-87-5	1,2 Dichloropropane	ND	mg / Kg	1	0.005	10/26/00
X00398	XG.2000.1206-9	78-87-5	1,2 Dichloropropane	ND	mg / Kg	1	0.005	10/26/00
X00398	XG.2000.1205-3	96-18-4	1,2,3 Trichloropropane	ND	mg / Kg	1	0.005	10/26/00
X00398	XG.2000.1206-9	96-18-4	1,2,3 Trichloropropane	ND	mg / Kg	1	0.005	10/26/00
X00398	XG.2000.1205-3	95-63-6	1,2,4-Trimethylbenzene	ND	mg / Kg	1	0.005	10/26/00
X00398	XG.2000.1206-9	95-63-6	1,2,4-Trimethylbenzene	ND	mg / Kg	1	0.005	10/26/00
X00398	XG.2000.1205-3	541-73-1	1,3 Dichlorobenzene	ND	mg / Kg	1	0.005	10/26/00
X00398	XG.2000.1206-9	541-73-1	1,3 Dichlorobenzene	ND	mg / Kg	1	0.005	10/26
X00398	XG.2000.1205-3	108-67-8	1,3,5-Trimethylbenzene	ND	mg / Kg	1	0.005	10/26/0

Quality Control Summary

Client: CH2MHILL

Project: 0010155 KAFB BULK FUEL FAC(ST106)

Explanation of codes

D *Not applicable due to sample dilution*

L *Not applicable due to MDL proximity*

X00398	XG.2000.1206-9	108-67-8	1,3,5-Trimethylbenzene	ND	mg / Kg	1	0.005	10/26/00
X00398	XG.2000.1205-3	764-41-0	1,4 Dichloro-2-butene	ND	mg / Kg	1	0.05	10/26/00
X00398	XG.2000.1206-9	764-41-0	1,4 Dichloro-2-butene	ND	mg / Kg	1	0.05	10/26/00
X00398	XG.2000.1205-3	106-46-7	1,4 Dichlorobenzene	ND	mg / Kg	1	0.005	10/26/00
X00398	XG.2000.1206-9	106-46-7	1,4 Dichlorobenzene	ND	mg / Kg	1	0.005	10/26/00
X00398	XG.2000.1205-3	78-93-3	2-Butanone (MEK)	ND	mg / Kg	1	0.025	10/26/00
X00398	XG.2000.1206-9	78-93-3	2-Butanone (MEK)	ND	mg / Kg	1	0.025	10/26/00
X00398	XG.2000.1205-3	110-75-8	2-Chloroethylvinylether	ND	mg / Kg	1	0.025	10/26/00
X00398	XG.2000.1206-9	110-75-8	2-Chloroethylvinylether	ND	mg / Kg	1	0.025	10/26/00
X00398	XG.2000.1205-3	591-78-6	2-Hexanone (MBK)	ND	mg / Kg	1	0.025	10/26/00
X00398	XG.2000.1206-9	591-78-6	2-Hexanone (MBK)	ND	mg / Kg	1	0.025	10/26/00
X00398	XG.2000.1205-3	108-10-1	4-Methyl-2-pentanone (MIBK)	ND	mg / Kg	1	0.025	10/26/00
X00398	XG.2000.1206-9	108-10-1	4-Methyl-2-pentanone (MIBK)	ND	mg / Kg	1	0.025	10/26/00
X00398	XG.2000.1205-3	67-64-1	Acetone	ND	mg / Kg	1	0.05	10/26/00
X00398	XG.2000.1206-9	67-64-1	Acetone	ND	mg / Kg	1	0.05	10/26/00
X00398	XG.2000.1205-3	107-02-8	Acrolein	ND	mg / Kg	1	0.1	10/26/00
X00398	XG.2000.1206-9	107-02-8	Acrolein	ND	mg / Kg	1	0.1	10/26/00
X00398	XG.2000.1205-3	107-13-1	Acrylonitrile	ND	mg / Kg	1	0.1	10/26/00
X00398	XG.2000.1206-9	107-13-1	Acrylonitrile	ND	mg / Kg	1	0.1	10/26/00
X00398	XG.2000.1205-3	71-43-2	Benzene	ND	mg / Kg	1	0.005	10/26/00
X00398	XG.2000.1206-9	71-43-2	Benzene	ND	mg / Kg	1	0.005	10/26/00
X00398	XG.2000.1205-3	75-27-4	Bromodichloromethane	ND	mg / Kg	1	0.005	10/26/00
X00398	XG.2000.1206-9	75-27-4	Bromodichloromethane	ND	mg / Kg	1	0.005	10/26/00
[illegible]8	XG.2000.1205-3	75-25-2	Bromoform	ND	mg / Kg	1	0.005	10/26/00
[illegible]8	XG.2000.1206-9	75-25-2	Bromoform	ND	mg / Kg	1	0.005	10/26/00
X00398	XG.2000.1205-3	74-83-9	Bromomethane	ND	mg / Kg	1	0.025	10/26/00
X00398	XG.2000.1206-9	74-83-9	Bromomethane	ND	mg / Kg	1	0.025	10/26/00
X00398	XG.2000.1205-3	75-15-0	Carbon disulfide	ND	mg / Kg	1	0.025	10/26/00
X00398	XG.2000.1206-9	75-15-0	Carbon disulfide	ND	mg / Kg	1	0.025	10/26/00
X00398	XG.2000.1205-3	56-23-5	Carbon tetrachloride	ND	mg / Kg	1	0.005	10/26/00
X00398	XG.2000.1206-9	56-23-5	Carbon tetrachloride	ND	mg / Kg	1	0.005	10/26/00
X00398	XG.2000.1205-3	108-90-7	Chlorobenzene	ND	mg / Kg	1	0.005	10/26/00
X00398	XG.2000.1206-9	108-90-7	Chlorobenzene	ND	mg / Kg	1	0.005	10/26/00
X00398	XG.2000.1205-3	124-48-1	Chlorodibromomethane	ND	mg / Kg	1	0.005	10/26/00
X00398	XG.2000.1206-9	124-48-1	Chlorodibromomethane	ND	mg / Kg	1	0.005	10/26/00
X00398	XG.2000.1205-3	75-00-3	Chloroethane	ND	mg / Kg	1	0.025	10/26/00
X00398	XG.2000.1206-9	75-00-3	Chloroethane	ND	mg / Kg	1	0.025	10/26/00
X00398	XG.2000.1205-3	67-66-3	Chloroform	ND	mg / Kg	1	0.005	10/26/00
X00398	XG.2000.1206-9	67-66-3	Chloroform	ND	mg / Kg	1	0.005	10/26/00
X00398	XG.2000.1205-3	74-87-3	Chloromethane	ND	mg / Kg	1	0.025	10/26/00
X00398	XG.2000.1206-9	74-87-3	Chloromethane	ND	mg / Kg	1	0.025	10/26/00
X00398	XG.2000.1205-3	156-59-2	cis-1,2 dichloroethene	ND	mg / Kg	1	0.005	10/26/00
X00398	XG.2000.1206-9	156-59-2	cis-1,2 dichloroethene	ND	mg / Kg	1	0.005	10/26/00
X00398	XG.2000.1205-3	10061-01-5	cis-1,3 dichloropropene	ND	mg / Kg	1	0.005	10/26/00
X00398	XG.2000.1206-9	10061-01-5	cis-1,3 dichloropropene	ND	mg / Kg	1	0.005	10/26/00
X00398	XG.2000.1205-3	74-95-3	Dibromomethane	ND	mg / Kg	1	0.005	10/26/00
X00398	XG.2000.1206-9	74-95-3	Dibromomethane	ND	mg / Kg	1	0.005	10/26/00
X00398	XG.2000.1205-3	97-63-2	Ethyl methacrylate	ND	mg / Kg	1	0.025	10/26/00
X00398	XG.2000.1206-9	97-63-2	Ethyl methacrylate	ND	mg / Kg	1	0.025	10/26/00
[illegible]8	XG.2000.1205-3	100-41-4	Ethylbenzene	ND	mg / Kg	1	0.005	10/26/00
X00398	XG.2000.1206-9	100-41-4	Ethylbenzene	ND	mg / Kg	1	0.005	10/26/00

Quality Control Summary

Client: CH2MHILL

Project: 0010155 KAFB BULK FUEL FAC(ST106)

Explanation of codes

D Not applicable due to sample dilu

L Not applicable due to MDL proximit

X00398	XG.2000.1205-3		Freon 113	ND	mg / Kg	1	0.025	10/26/00
X00398	XG.2000.1206-9		Freon 113	ND	mg / Kg	1	0.025	10/26/00
X00398	XG.2000.1205-3	75-71-8	Freon 12	ND	mg / Kg	1	0.05	10/26/00
X00398	XG.2000.1206-9	75-71-8	Freon 12	ND	mg / Kg	1	0.05	10/26/00
X00398	XG.2000.1205-3	74-88-4	Iodomethane	ND	mg / Kg	1	0.025	10/26/00
X00398	XG.2000.1206-9	74-88-4	Iodomethane	ND	mg / Kg	1	0.025	10/26/00
X00398	XG.2000.1205-3	1634-04-4	Methyl t-butyl ether (MTBE)	ND	mg / Kg	1	0.005	10/26/00
X00398	XG.2000.1206-9	1634-04-4	Methyl t-butyl ether (MTBE)	ND	mg / Kg	1	0.005	10/26/00
X00398	XG.2000.1205-3	75-09-2	Methylene chloride	ND	mg / Kg	1	0.05	10/26/00
X00398	XG.2000.1206-9	75-09-2	Methylene chloride	ND	mg / Kg	1	0.05	10/26/00
X00398	XG.2000.1205-3	91-20-3	Naphthalene	ND	mg / Kg	1	0.025	10/26/00
X00398	XG.2000.1206-9	91-20-3	Naphthalene	ND	mg / Kg	1	0.025	10/26/00
X00398	XG.2000.1205-3	95-47-6	o-Xylene	ND	mg / Kg	1	0.005	10/26/00
X00398	XG.2000.1206-9	95-47-6	o-Xylene	ND	mg / Kg	1	0.005	10/26/00
X00398	XG.2000.1205-3	108-38-3/106-42	p/m Xylenes	ND	mg / Kg	1	0.01	10/26/00
X00398	XG.2000.1206-9	108-38-3/106-42	p/m Xylenes	ND	mg / Kg	1	0.01	10/26/00
X00398	XG.2000.1205-3	100-42-5	Styrene	ND	mg / Kg	1	0.005	10/26/00
X00398	XG.2000.1206-9	100-42-5	Styrene	ND	mg / Kg	1	0.005	10/26/00
X00398	XG.2000.1205-3	156-60-5	t-1,2 Dichloroethene	ND	mg / Kg	1	0.005	10/26/00
X00398	XG.2000.1206-9	156-60-5	t-1,2 Dichloroethene	ND	mg / Kg	1	0.005	10/26/00
X00398	XG.2000.1205-3	10061-02-6	t-1,3 Dichloropropene	ND	mg / Kg	1	0.005	10/26/00
X00398	XG.2000.1206-9	10061-02-6	t-1,3 Dichloropropene	ND	mg / Kg	1	0.005	10/26/00
X00398	XG.2000.1205-3	127-18-4	Tetrachloroethene	ND	mg / Kg	1	0.005	10/26
X00398	XG.2000.1206-9	127-18-4	Tetrachloroethene	ND	mg / Kg	1	0.005	10/26/00
X00398	XG.2000.1205-3	108-88-3	Toluene	ND	mg / Kg	1	0.005	10/26/00
X00398	XG.2000.1206-9	108-88-3	Toluene	ND	mg / Kg	1	0.005	10/26/00
X00398	XG.2000.1205-3	79-01-6	Trichloroethene	ND	mg / Kg	1	0.005	10/26/00
X00398	XG.2000.1206-9	79-01-6	Trichloroethene	ND	mg / Kg	1	0.005	10/26/00
X00398	XG.2000.1205-3	75-69-4	Trichlorofluoromethane	ND	mg / Kg	1	0.025	10/26/00
X00398	XG.2000.1206-9	75-69-4	Trichlorofluoromethane	ND	mg / Kg	1	0.025	10/26/00
X00398	XG.2000.1205-3	108-05-4	Vinyl acetate	ND	mg / Kg	1	0.025	10/26/00
X00398	XG.2000.1206-9	108-05-4	Vinyl acetate	ND	mg / Kg	1	0.025	10/26/00
X00398	XG.2000.1205-3	75-01-4	Vinyl chloride	ND	mg / Kg	1	0.025	10/26/00
X00398	XG.2000.1206-9	75-01-4	Vinyl chloride	ND	mg / Kg	1	0.025	10/26/00
X00403-001		**SW846 ME/8015A Diesel Range Organics by GC/FID**						
X00403	XG.2000.1139-1		Diesel Range Organics	ND	mg / Kg	1	25	10/13/00
X00403-017		**SW846 ME/8015A Diesel Range Organics by GC/FID**						
X00403	XG.2000.1150-1		Diesel Range Organics	ND	mg / Kg	1	25	10/16/00
X00406-001		**SW846 3550A/8270B SVOCs by GC/MS**						
X00406	XG.2000.1171-1	120-82-1	1,2,4-Trichlorobenzene	ND	mg / Kg	1	0.03	10/17/00
X00406	XG.2000.1171-1	95-50-1	1,2-Dichlorobenzene	ND	mg / Kg	1	0.03	10/17/00
X00406	XG.2000.1171-1	541-73-1	1,3-Dichlorobenzene	ND	mg / Kg	1	0.03	10/17/00
X00406	XG.2000.1171-1	106-46-7	1,4-Dichlorobenzene	ND	mg / Kg	1	0.03	10/17/00
X00406	XG.2000.1171-1	90-12-0	1-Methylnaphthalene	ND	mg / Kg	1	0.03	10/17/00
X00406	XG.2000.1171-1	58-90-2	2,3,4,6-Tetrachlorophenol	ND	mg / Kg	1	1.5	10/17/00
X00406	XG.2000.1171-1	95-95-4	2,4,5-Trichlorophenol	ND	mg / Kg	1	0.3	10/17/00
X00406	XG.2000.1171-1	88-06-2	2,4,6-Trichlorophenol	ND	mg / Kg	1	0.3	10/17
X00406	XG.2000.1171-1	120-83-2	2,4-Dichlorophenol	ND	mg / Kg	1	0.3	10/17

Quality Control Summary

Explanation of codes

D *Not applicable due to sample dilution*
L *Not applicable due to MDL proximity*

Client: **CH2MHILL**
Project: **0010155** **KAFB BULK FUEL FAC(ST106)**

X00406	XG.2000.1171-1	105-67-9	2,4-Dimethylphenol	ND	mg / Kg	1	0.03	10/17/00
X00406	XG.2000.1171-1	51-28-5	2,4-Dinitrophenol	ND	mg / Kg	1	0.67	10/17/00
X00406	XG.2000.1171-1	121-14-2	2,4-Dinitrotoluene	ND	mg / Kg	1	0.3	10/17/00
X00406	XG.2000.1171-1	606-20-2	2,6-Dinitrotoluene	ND	mg / Kg	1	0.3	10/17/00
X00406	XG.2000.1171-1	91-58-7	2-Chloronaphthalene	ND	mg / Kg	1	0.03	10/17/00
X00406	XG.2000.1171-1	95-57-8	2-Chlorophenol	ND	mg / Kg	1	0.03	10/17/00
X00406	XG.2000.1171-1	91-57-6	2-Methylnaphthalene	ND	mg / Kg	1	0.03	10/17/00
X00406	XG.2000.1171-1	95-48-7	2-Methylphenol	ND	mg / Kg	1	0.03	10/17/00
X00406	XG.2000.1171-1	88-74-4	2-Nitroaniline	ND	mg / Kg	1	0.3	10/17/00
X00406	XG.2000.1171-1	88-75-5	2-Nitrophenol	ND	mg / Kg	1	0.3	10/17/00
X00406	XG.2000.1171-1		3+4 Methylphenol	ND	mg / Kg	1	0.03	10/17/00
X00406	XG.2000.1171-1	91-94-1	3,3-Dichlorobenzidine	ND	mg / Kg	1	0.3	10/17/00
X00406	XG.2000.1171-1	99-09-2	3-Nitroaniline	ND	mg / Kg	1	0.3	10/17/00
X00406	XG.2000.1171-1	534-52-1	4,6-Dinitro-2-methylphenol	ND	mg / Kg	1	0.3	10/17/00
X00406	XG.2000.1171-1	101-55-3	4-Bromophenyl-phenylether	ND	mg / Kg	1	0.03	10/17/00
X00406	XG.2000.1171-1	59-50-7	4-Chloro-3-methylphenol	ND	mg / Kg	1	0.3	10/17/00
X00406	XG.2000.1171-1	106-47-8	4-Chloroaniline	ND	mg / Kg	1	0.3	10/17/00
X00406	XG.2000.1171-1	7005-72-3	4-Chlorophenyl-phenylether	ND	mg / Kg	1	0.03	10/17/00
X00406	XG.2000.1171-1	100-01-6	4-Nitroaniline	ND	mg / Kg	1	0.3	10/17/00
X00406	XG.2000.1171-1	100-02-7	4-Nitrophenol	ND	mg / Kg	1	0.6	10/17/00
X00406	XG.2000.1171-1	83-32-9	Acenaphthene	ND	mg / Kg	1	0.03	10/17/00
X00406	XG.2000.1171-1	208-96-8	Acenaphthylene	ND	mg / Kg	1	0.03	10/17/00
X00406	XG.2000.1171-1	62-53-3	Aniline	ND	mg / Kg	1	0.3	10/17/00
[illegible]5	XG.2000.1171-1	120-12-7	Anthracene	ND	mg / Kg	1	0.03	10/17/00
[illegible]06	XG.2000.1171-1		Azobenzene&1,2-Diphenylhydrazine	ND	mg / Kg	1	0.03	10/17/00
X00406	XG.2000.1171-1	56-55-3	Benzo (a) anthracene	ND	mg / Kg	1	0.03	10/17/00
X00406	XG.2000.1171-1	50-32-8	Benzo(a)pyrene	ND	mg / Kg	1	0.03	10/17/00
X00406	XG.2000.1171-1		Benzo(b & k)fluoranthene	ND	mg / Kg	1	0.03	10/17/00
X00406	XG.2000.1171-1	191-24-2	Benzo(g,h,i)perylene	ND	mg / Kg	1	0.3	10/17/00
X00406	XG.2000.1171-1	64-85-0	Benzoic acid	ND	mg / Kg	1	3	10/17/00
X00406	XG.2000.1171-1	100-51-6	Benzyl alcohol	ND	mg / Kg	1	1.5	10/17/00
X00406	XG.2000.1171-1	111-44-4	bis (2-Chloroethyl) ether	ND	mg / Kg	1	0.03	10/17/00
X00406	XG.2000.1171-1	111-91-1	bis(2-Chloroethoxy)methane	ND	mg / Kg	1	0.03	10/17/00
X00406	XG.2000.1171-1	108-60-1	bis(2-Chloroisopropyl)ether	ND	mg / Kg	1	0.03	10/17/00
X00406	XG.2000.1171-1	117-81-7	bis(2-Ethylhexyl)phthalate	ND	mg / Kg	1	0.3	10/17/00
X00406	XG.2000.1171-1	85-68-7	Butylbenzylphthalate	ND	mg / Kg	1	0.03	10/17/00
X00406	XG.2000.1171-1	218-01-9	Chrysene	ND	mg / Kg	1	0.03	10/17/00
X00406	XG.2000.1171-1	84-74-2	di-n-Butylphthalate	ND	mg / Kg	1	0.3	10/17/00
X00406	XG.2000.1171-1	117-84-0	di-n-Octylpthalate	ND	mg / Kg	1	0.3	10/17/00
X00406	XG.2000.1171-1	53-70-3	Dibenz(a,h)anthracene	ND	mg / Kg	1	0.3	10/17/00
X00406	XG.2000.1171-1	132-64-9	Dibenzofuran	ND	mg / Kg	1	0.03	10/17/00
X00406	XG.2000.1171-1	84-66-2	Diethylphthalate	ND	mg / Kg	1	0.03	10/17/00
X00406	XG.2000.1171-1	131-11-3	Dimethylphthalate	ND	mg / Kg	1	0.03	10/17/00
X00406	XG.2000.1171-1	206-44-0	Fluoranthene	ND	mg / Kg	1	0.03	10/17/00
X00406	XG.2000.1171-1	86737	Fluorene	ND	mg / Kg	1	0.03	10/17/00
X00406	XG.2000.1171-1	118-74-1	Hexachlorobenzene	ND	mg / Kg	1	0.03	10/17/00
X00406	XG.2000.1171-1	87-68-3	Hexachlorobutadiene	ND	mg / Kg	1	0.03	10/17/00
X00406	XG.2000.1171-1	77-47-4	Hexachlorocyclopentadiene	ND	mg / Kg	1	1.5	10/17/00
[illegible]06	XG.2000.1171-1	67-72-1	Hexachloroethane	ND	mg / Kg	1	0.03	10/17/00
[illegible]406	XG.2000.1171-1	193-39-5	Indeno(1,2,3-cd)pyrene	ND	mg / Kg	1	0.3	10/17/00

Quality Control Summary

Client: **CH2MHILL**

Project: **0010155** **KAFB BULK FUEL FAC(ST106)**

Explanation of codes

D *Not applicable due to sample dil*

L *Not applicable due to MDL proxi*

X00406	XG.2000.1171-1	78-59-1	Isophorone	ND	mg / Kg	1	0.03	10/17/00
X00406	XG.2000.1171-1	621-64-7	n-Nitroso-di-n-propylamine	ND	mg / Kg	1	0.03	10/17/00
X00406	XG.2000.1171-1	62-75-9	n-Nitroso-dimethyl-amine	ND	mg / Kg	1	0.3	10/17/00
X00406	XG.2000.1171-1	86-30-6	n-Nitrosodiphenylamine	ND	mg / Kg	1	0.03	10/17/00
X00406	XG.2000.1171-1	91-20-3	Naphthalene	ND	mg / Kg	1	0.03	10/17/00
X00406	XG.2000.1171-1	98-95-3	Nitrobenzene	ND	mg / Kg	1	0.03	10/17/00
X00406	XG.2000.1171-1	87-86-5	Pentachlorophenol	ND	mg / Kg	1	0.3	10/17/00
X00406	XG.2000.1171-1	85-01-8	Phenanthrene	ND	mg / Kg	1	0.03	10/17/00
X00406	XG.2000.1171-1	108-95-2	Phenol	ND	mg / Kg	1	0.3	10/17/00
X00406	XG.2000.1171-1	129-00-0	Pyrene	ND	mg / Kg	1	0.03	10/17/00
X00406	XG.2000.1171-1	110-86-1	Pyridine	ND	mg / Kg	1	0.3	10/17/00
X00406-010		**SW846 3550A/8270B SVOCs by GC/MS**						
X00406	XG.2000.1184-1	120-82-1	1,2,4-Trichlorobenzene	ND	mg / Kg	1	0.03	10/19/00
X00406	XG.2000.1184-1	95-50-1	1,2-Dichlorobenzene	ND	mg / Kg	1	0.03	10/19/00
X00406	XG.2000.1184-1	541-73-1	1,3-Dichlorobenzene	ND	mg / Kg	1	0.03	10/19/00
X00406	XG.2000.1184-1	106-46-7	1,4-Dichlorobenzene	ND	mg / Kg	1	0.03	10/19/00
X00406	XG.2000.1184-1	90-12-0	1-Methylnaphthalene	ND	mg / Kg	1	0.03	10/19/00
X00406	XG.2000.1184-1	58-90-2	2,3,4,6-Tetrachlorophenol	ND	mg / Kg	1	1.5	10/19/00
X00406	XG.2000.1184-1	95-95-4	2,4,5-Trichlorophenol	ND	mg / Kg	1	0.3	10/19/00
X00406	XG.2000.1184-1	88-06-2	2,4,6-Trichlorophenol	ND	mg / Kg	1	0.3	10/19/00
X00406	XG.2000.1184-1	120-83-2	2,4-Dichlorophenol	ND	mg / Kg	1	0.3	10/19/00
X00406	XG.2000.1184-1	105-67-9	2,4-Dimethylphenol	ND	mg / Kg	1	0.03	10/19/00
X00406	XG.2000.1184-1	51-28-5	2,4-Dinitrophenol	ND	mg / Kg	1	0.67	10/19/0
X00406	XG.2000.1184-1	121-14-2	2,4-Dinitrotoluene	ND	mg / Kg	1	0.3	10/19
X00406	XG.2000.1184-1	606-20-2	2,6-Dinitrotoluene	ND	mg / Kg	1	0.3	10/19/0
X00406	XG.2000.1184-1	91-58-7	2-Chloronaphthalene	ND	mg / Kg	1	0.03	10/19/00
X00406	XG.2000.1184-1	95-57-8	2-Chlorophenol	ND	mg / Kg	1	0.03	10/19/00
X00406	XG.2000.1184-1	91-57-6	2-Methylnaphthalene	ND	mg / Kg	1	0.03	10/19/00
X00406	XG.2000.1184-1	95-48-7	2-Methylphenol	ND	mg / Kg	1	0.03	10/19/00
X00406	XG.2000.1184-1	88-74-4	2-Nitroaniline	ND	mg / Kg	1	0.3	10/19/00
X00406	XG.2000.1184-1	88-75-5	2-Nitrophenol	ND	mg / Kg	1	0.3	10/19/00
X00406	XG.2000.1184-1		3+4 Methylphenol	ND	mg / Kg	1	0.03	10/19/00
X00406	XG.2000.1184-1	91-94-1	3,3-Dichlorobenzidine	ND	mg / Kg	1	0.3	10/19/00
X00406	XG.2000.1184-1	99-09-2	3-Nitroaniline	ND	mg / Kg	1	0.3	10/19/00
X00406	XG.2000.1184-1	534-52-1	4,6-Dinitro-2-methylphenol	ND	mg / Kg	1	0.3	10/19/00
X00406	XG.2000.1184-1	101-55-3	4-Bromophenyl-phenylether	ND	mg / Kg	1	0.03	10/19/00
X00406	XG.2000.1184-1	59-50-7	4-Chloro-3-methylphenol	ND	mg / Kg	1	0.3	10/19/00
X00406	XG.2000.1184-1	106-47-8	4-Chloroaniline	ND	mg / Kg	1	0.3	10/19/00
X00406	XG.2000.1184-1	7005-72-3	4-Chlorophenyl-phenylether	ND	mg / Kg	1	0.03	10/19/00
X00406	XG.2000.1184-1	100-01-6	4-Nitroaniline	ND	mg / Kg	1	0.3	10/19/00
X00406	XG.2000.1184-1	100-02-7	4-Nitrophenol	ND	mg / Kg	1	0.6	10/19/00
X00406	XG.2000.1184-1	83-32-9	Acenaphthene	ND	mg / Kg	1	0.03	10/19/00
X00406	XG.2000.1184-1	208-96-8	Acenaphthylene	ND	mg / Kg	1	0.03	10/19/00
X00406	XG.2000.1184-1	62-53-3	Aniline	ND	mg / Kg	1	0.3	10/19/00
X00406	XG.2000.1184-1	120-12-7	Anthracene	ND	mg / Kg	1	0.03	10/19/00
X00406	XG.2000.1184-1		Azobenzene&1,2-Diphenylhydrazine	ND	mg / Kg	1	0.03	10/19/00
X00406	XG.2000.1184-1	56-55-3	Benzo (a) anthracene	ND	mg / Kg	1	0.03	10/19/00
X00406	XG.2000.1184-1	50-32-8	Benzo(a)pyrene	ND	mg / Kg	1	0.03	10/19/00
X00406	XG.2000.1184-1		Benzo(b & k)fluoranthene	ND	mg / Kg	1	0.03	10/19/

Quality Control Summary

C : CH2MHILL

Project: 0010155 KAFB BULK FUEL FAC(ST106)

Explanation of codes

D *Not applicable due to sample dilution*

L *Not applicable due to MDL proximity*

X00406	XG.2000.1184-1	191-24-2	Benzo(g,h,i)perylene	ND	mg / Kg	1	0.3		10/19/00
X00406	XG.2000.1184-1	64-85-0	Benzoic acid	ND	mg / Kg	1	3		10/19/00
X00406	XG.2000.1184-1	100-51-6	Benzyl alcohol	ND	mg / Kg	1	1.5		10/19/00
X00406	XG.2000.1184-1	111-44-4	bis (2-Chloroethyl) ether	ND	mg / Kg	1	0.03		10/19/00
X00406	XG.2000.1184-1	111-91-1	bis(2-Chloroethoxy)methane	ND	mg / Kg	1	0.03		10/19/00
X00406	XG.2000.1184-1	108-60-1	bis(2-Chloroisopropyl)ether	ND	mg / Kg	1	0.03		10/19/00
X00406	XG.2000.1184-1	117-81-7	bis(2-Ethylhexyl)phthalate	ND	mg / Kg	1	0.3		10/19/00
X00406	XG.2000.1184-1	85-68-7	Butylbenzylphthalate	ND	mg / Kg	1	0.03		10/19/00
X00406	XG.2000.1184-1	218-01-9	Chrysene	ND	mg / Kg	1	0.03		10/19/00
X00406	XG.2000.1184-1	84-74-2	di-n-Butylphthalate	ND	mg / Kg	1	0.3		10/19/00
X00406	XG.2000.1184-1	117-84-0	di-n-Octylpthalate	ND	mg / Kg	1	0.3		10/19/00
X00406	XG.2000.1184-1	53-70-3	Dibenz(a,h)anthracene	ND	mg / Kg	1	0.3		10/19/00
X00406	XG.2000.1184-1	132-64-9	Dibenzofuran	ND	mg / Kg	1	0.03		10/19/00
X00406	XG.2000.1184-1	84-66-2	Diethylphthalate	ND	mg / Kg	1	0.03		10/19/00
X00406	XG.2000.1184-1	131-11-3	Dimethylphthalate	ND	mg / Kg	1	0.03		10/19/00
X00406	XG.2000.1184-1	206-44-0	Fluoranthene	ND	mg / Kg	1	0.03		10/19/00
X00406	XG.2000.1184-1	86737	Fluorene	ND	mg / Kg	1	0.03		10/19/00
X00406	XG.2000.1184-1	118-74-1	Hexachlorobenzene	ND	mg / Kg	1	0.03		10/19/00
X00406	XG.2000.1184-1	87-68-3	Hexachlorobutadiene	ND	mg / Kg	1	0.03		10/19/00
X00406	XG.2000.1184-1	77-47-4	Hexachlorocyclopentadiene	ND	mg / Kg	1	1.5		10/19/00
X00406	XG.2000.1184-1	67-72-1	Hexachloroethane	ND	mg / Kg	1	0.03		10/19/00
X00406	XG.2000.1184-1	193-39-5	Indeno(1,2,3-cd)pyrene	ND	mg / Kg	1	0.3		10/19/00
X00406	XG.2000.1184-1	78-59-1	Isophorone	ND	mg / Kg	1	0.03		10/19/00
	XG.2000.1184-1	621-64-7	n-Nitroso-di-n-propylamine	ND	mg / Kg	1	0.03		10/19/00
X00406	XG.2000.1184-1	62-75-9	n-Nitroso-dimethyl-amine	ND	mg / Kg	1	0.3		10/19/00
X00406	XG.2000.1184-1	86-30-6	n-Nitrosodiphenylamine	ND	mg / Kg	1	0.03		10/19/00
X00406	XG.2000.1184-1	91-20-3	Naphthalene	ND	mg / Kg	1	0.03		10/19/00
X00406	XG.2000.1184-1	98-95-3	Nitrobenzene	ND	mg / Kg	1	0.03		10/19/00
X00406	XG.2000.1184-1	87-86-5	Pentachlorophenol	ND	mg / Kg	1	0.3		10/19/00
X00406	XG.2000.1184-1	85-01-8	Phenanthrene	ND	mg / Kg	1	0.03		10/19/00
X00406	XG.2000.1184-1	108-95-2	Phenol	ND	mg / Kg	1	0.3		10/19/00
X00406	XG.2000.1184-1	129-00-0	Pyrene	ND	mg / Kg	1	0.03		10/19/00
X00406	XG.2000.1184-1	110-86-1	Pyridine	ND	mg / Kg	1	0.3		10/19/00
X00408-001		**SW846 5030A/8015A GRO by GC/FID**							
X00408	XG.2000.1155-1		Gasoline Range Organics	ND	mg / Kg	1	0.25		10/16/00
X00408-026		**SW846 5030A/8015A GRO by GC/FID**							
X00408	XG.2000.1161-1		Gasoline Range Organics	ND	mg / Kg	1	0.25		10/18/00

QC Type **MS: Matrix Spike** QC Matrix **SOLID**

QC Group	Run Sequence	CAS #	Analyte	Result	Units	Dilution Factor	Detection Limit	Code	Run Date
X00392-005		**SW846 5030A/8021B Purgeable VOCs by GC/PID**							
X00392	XG.2000.1112-5	71-43-2	Benzene	104	% Recovery	1	NA		10/05/00
X00392	XG.2000.1112-5	100-41-4	Ethylbenzene	104	% Recovery	1	NA		10/05/00
X00392	XG.2000.1112-5	95-47-6	o-Xylene	106	% Recovery	1	NA		10/05/00
2	XG.2000.1112-5	108-38-3/106-42	p/m-Xylenes	105	% Recovery	1	NA		10/05/00

Quality Control Summary

Client: CH2MHILL

Project: 0010155 KAFB BULK FUEL FAC(ST106)

Explanation of codes

D *Not applicable due to sample dilu*

L *Not applicable due to MDL proximit*

X00392	XG.2000.1112-5	108-88-3	Toluene	103	% Recovery	1	NA		10/05/00
X00398-016		**SW846 8260A Purgeable VOCs by GC/MS**							
X00398	XG.2000.1158-10	75-34-3	1,1 Dichloroethene	123	% Recovery	1	NA		10/17/00
X00398	XG.2000.1206-5	75-34-3	1,1 Dichloroethene	123	% Recovery	1	NA		10/17/00
X00398	XG.2000.1158-10	106-46-7	1,4 Dichlorobenzene	103	% Recovery	1	NA		10/17/00
X00398	XG.2000.1206-5	106-46-7	1,4 Dichlorobenzene	103	% Recovery	1	NA		10/17/00
X00398	XG.2000.1158-10	71-43-2	Benzene	118	% Recovery	1	NA		10/17/00
X00398	XG.2000.1206-5	71-43-2	Benzene	118	% Recovery	1	NA		10/17/00
X00398	XG.2000.1158-10	108-90-7	Chlorobenzene	108	% Recovery	1	NA		10/17/00
X00398	XG.2000.1206-5	108-90-7	Chlorobenzene	108	% Recovery	1	NA		10/17/00
X00398	XG.2000.1158-10	108-88-3	Toluene	116	% Recovery	1	NA		10/17/00
X00398	XG.2000.1206-5	108-88-3	Toluene	116	% Recovery	1	NA		10/17/00
X00398	XG.2000.1158-10	79-01-6	Trichloroethene	113	% Recovery	1	NA		10/17/00
X00398	XG.2000.1206-5	79-01-6	Trichloroethene	113	% Recovery	1	NA		10/17/00
X00403-005		**SW846 ME/8015A Diesel Range Organics by GC/FID**							
X00403	XG.2000.1139-5		Diesel Range Organics	107	% Recovery	1	NA		10/13/00
X00408-023		**SW846 5030A/8015A GRO by GC/FID**							
X00408	XG.2000.1155-15		Gasoline Range Organics	90	% Recovery	1	NA		10/17/00

QC Type **MSD: Matrix Spike Duplicate Accuracy** QC Matrix **SOLID**

QC Group	Run Sequence	CAS #	Analyte	Result	Units	Dilution Factor	Detection Limit	Code	Run Date
X00392-006		**SW846 5030A/8021B Purgeable VOCs by GC/PID**							
X00392	XG.2000.1112-6	71-43-2	Benzene	100	% Recovery	1	NA		10/05/00
X00392	XG.2000.1112-6	100-41-4	Ethylbenzene	100	% Recovery	1	NA		10/05/00
X00392	XG.2000.1112-6	95-47-6	o-Xylene	103	% Recovery	1	NA		10/05/00
X00392	XG.2000.1112-6	108-38-3/106-42	p/m-Xylenes	101	% Recovery	1	NA		10/05/00
X00392	XG.2000.1112-6	108-88-3	Toluene	100	% Recovery	1	NA		10/05/00
X00398-017		**SW846 8260A Purgeable VOCs by GC/MS**							
X00398	XG.2000.1158-11	75-34-3	1,1 Dichloroethene	116	% Recovery	1	NA		10/17/00
X00398	XG.2000.1206-6	75-34-3	1,1 Dichloroethene	116	% Recovery	1	NA		10/17/00
X00398	XG.2000.1158-11	106-46-7	1,4 Dichlorobenzene	99	% Recovery	1	NA		10/17/00
X00398	XG.2000.1206-6	106-46-7	1,4 Dichlorobenzene	99	% Recovery	1	NA		10/17/00
X00398	XG.2000.1158-11	71-43-2	Benzene	110	% Recovery	1	NA		10/17/00
X00398	XG.2000.1206-6	71-43-2	Benzene	110	% Recovery	1	NA		10/17/00
X00398	XG.2000.1158-11	108-90-7	Chlorobenzene	105	% Recovery	1	NA		10/17/00
X00398	XG.2000.1206-6	108-90-7	Chlorobenzene	105	% Recovery	1	NA		10/17/00
X00398	XG.2000.1158-11	108-88-3	Toluene	110	% Recovery	1	NA		10/17/00
X00398	XG.2000.1206-6	108-88-3	Toluene	110	% Recovery	1	NA		10/17/00
X00398	XG.2000.1158-11	79-01-6	Trichloroethene	106	% Recovery	1	NA		10/17/00
X00398	XG.2000.1206-6	79-01-6	Trichloroethene	106	% Recovery	1	NA		10/17/00
X00403-006		**SW846 ME/8015A Diesel Range Organics by GC/FID**							
X00403	XG.2000.1139-6		Diesel Range Organics	107	% Recovery	1	NA		10/13/00

Quality Control Summary

Explanation of codes

D *Not applicable due to sample dilution*
L *Not applicable due to MDL proximity*

t: CH2MHILL
Project: 0010155 KAFB BULK FUEL FAC(ST106)

X00408-024		SW846 5030A/8015A GRO by GC/FID						
X00408	XG.2000.1155-16		Gasoline Range Organics	108	% Recovery	1	NA	10/17/00

QC Type **MSD: Matrix Spike Duplicate Precision** QC Matrix **SOLID**

QC Group	Run Sequence	CAS #	Analyte	Result	Units	Dilution Factor	Detection Limit	Code	Run Date
X00392-006		SW846 5030A/8021B Purgeable VOCs by GC/PID							
X00392	XG.2000.1112-6	71-43-2	Benzene	4	RPD	1	NA		10/05/00
X00392	XG.2000.1112-6	100-41-4	Ethylbenzene	4	RPD	1	NA		10/05/00
X00392	XG.2000.1112-6	95-47-6	o-Xylene	3	RPD	1	NA		10/05/00
X00392	XG.2000.1112-6	108-38-3/106-42	p/m-Xylenes	4	RPD	1	NA		10/05/00
X00392	XG.2000.1112-6	108-88-3	Toluene	4	RPD	1	NA		10/05/00
X00398-017		SW846 8260A Purgeable VOCs by GC/MS							
X00398	XG.2000.1158-11	75-34-3	1,1 Dichloroethene	6	RPD	1	NA		10/17/00
X00398	XG.2000.1206-6	75-34-3	1,1 Dichloroethene	6	RPD	1	NA		10/17/00
X00398	XG.2000.1158-11	106-46-7	1,4 Dichlorobenzene	4	RPD	1	NA		10/17/00
X00398	XG.2000.1206-6	106-46-7	1,4 Dichlorobenzene	4	RPD	1	NA		10/17/00
X00398	XG.2000.1158-11	71-43-2	Benzene	6	RPD	1	NA		10/17/00
[illegible]8	XG.2000.1206-6	71-43-2	Benzene	6	RPD	1	NA		10/17/00
[illegible]8	XG.2000.1158-11	108-90-7	Chlorobenzene	3	RPD	1	NA		10/17/00
X00398	XG.2000.1206-6	108-90-7	Chlorobenzene	3	RPD	1	NA		10/17/00
X00398	XG.2000.1158-11	108-88-3	Toluene	6	RPD	1	NA		10/17/00
X00398	XG.2000.1206-6	108-88-3	Toluene	6	RPD	1	NA		10/17/00
X00398	XG.2000.1158-11	79-01-6	Trichloroethene	6	RPD	1	NA		10/17/00
X00398	XG.2000.1206-6	79-01-6	Trichloroethene	6	RPD	1	NA		10/17/00
X00403-006		SW846 ME/8015A Diesel Range Organics by GC/FID							
X00403	XG.2000.1139-6		Diesel Range Organics	< 1	RPD	1	NA		10/13/00
X00408-024		SW846 5030A/8015A GRO by GC/FID							
X00408	XG.2000.1155-16		Gasoline Range Organics	18	RPD	1	NA		10/17/00

Quality Control Summary

Client: **CH2MHILL**

Project: **0010155** **KAFB BULK FUEL FAC(ST106)**

Explanation of codes

D	*Not applicable due to sample dilut*
L	*Not applicable due to MDL proximity*

QC Type **LCS: Lab Control Spike** QC Matrix **WATER**

QC Group	Run Sequence	CAS #	Analyte	Result	Units	Dilution Factor	Detection Limit	Code	Run Date
X00410-008		**SW846 8260A Purgeable VOCs by GC/MS**							
X00410	XG.2000.1175-8	75-34-3	1,1 Dichloroethene	114	% Recovery	1	NA		10/18/0C
X00410	XG.2000.1175-8	106-46-7	1,4 Dichlorobenzene	101	% Recovery	1	NA		10/18/0C
X00410	XG.2000.1175-8	71-43-2	Benzene	113	% Recovery	1	NA		10/18/0C
X00410	XG.2000.1175-8	108-90-7	Chlorobenzene	106	% Recovery	1	NA		10/18/0C
X00410	XG.2000.1175-8	108-88-3	Toluene	113	% Recovery	1	NA		10/18/0C
X00410	XG.2000.1175-8	79-01-6	Trichloroethene	106	% Recovery	1	NA		10/18/0C

QC Type **LCSD: Lab Control Spike Duplicate Accuracy** QC Matrix **WATER**

QC Group	Run Sequence	CAS #	Analyte	Result	Units	Dilution Factor	Detection Limit	Code	Run Date
X00410-009		**SW846 8260A Purgeable VOCs by GC/MS**							
X00410	XG.2000.1175-9	75-34-3	1,1 Dichloroethene	115	% Recovery	1	NA		10/18/0C
X00410	XG.2000.1175-9	106-46-7	1,4 Dichlorobenzene	100	% Recovery	1	NA		10/18/0C
X00410	XG.2000.1175-9	71-43-2	Benzene	115	% Recovery	1	NA		10/18
X00410	XG.2000.1175-9	108-90-7	Chlorobenzene	108	% Recovery	1	NA		10/18/0C
X00410	XG.2000.1175-9	108-88-3	Toluene	113	% Recovery	1	NA		10/18/00
X00410	XG.2000.1175-9	79-01-6	Trichloroethene	107	% Recovery	1	NA		10/18/00

QC Type **LCSD: Lab Control Spike Duplicate Precision** QC Matrix **WATER**

QC Group	Run Sequence	CAS #	Analyte	Result	Units	Dilution Factor	Detection Limit	Code	Run Date
X00410-009		**SW846 8260A Purgeable VOCs by GC/MS**							
X00410	XG.2000.1175-9	75-34-3	1,1 Dichloroethene	< 1	RPD	1	NA		10/18/00
X00410	XG.2000.1175-9	106-46-7	1,4 Dichlorobenzene	< 1	RPD	1	NA		10/18/00
X00410	XG.2000.1175-9	71-43-2	Benzene	1	RPD	1	NA		10/18/00
X00410	XG.2000.1175-9	108-90-7	Chlorobenzene	2	RPD	1	NA		10/18/00
X00410	XG.2000.1175-9	108-88-3	Toluene	< 1	RPD	1	NA		10/18/00
X00410	XG.2000.1175-9	79-01-6	Trichloroethene	< 1	RPD	1	NA		10/18/0C

QC Type **MB: Method Blank** QC Matrix **WATER**

QC Group	Run Sequence	CAS #	Analyte	Result	Units	Dilution Factor	Detection Limit	Code	Run Date
X00410-001		**SW846 8260A Purgeable VOCs by GC/MS**							
X00410	XG.2000.1175-1	75-34-3	1,1 Dichloroethane	ND	ug / L	1	1		10/18
X00410	XG.2000.1175-1	75-34-3	1,1 Dichloroethene	ND	ug / L	1	1		10/18/

Quality Control Summary

Explanation of codes

D	*Not applicable due to sample dilution*
L	*Not applicable due to MDL proximity*

C[illegible]: **CH2MHILL**

Project: **0010155** **KAFB BULK FUEL FAC(ST106)**

X00410	XG.2000.1175-1	71-55-6	1,1,1 Trichloroethane	ND	ug / L	1	1	10/18/00
X00410	XG.2000.1175-1	630-20-6	1,1,1,2 Tetrachloroethane	ND	ug / L	1	1	10/18/00
X00410	XG.2000.1175-1	79-00-5	1,1,2 Trichloroethane	ND	ug / L	1	1	10/18/00
X00410	XG.2000.1175-1	79-34-5	1,1,2,2 Tetrachloroethane	ND	ug / L	1	1	10/18/00
X00410	XG.2000.1175-1	106-93-4	1,2 Dibromoethane (EDB)	ND	ug / L	1	1	10/18/00
X00410	XG.2000.1175-1	95-50-1	1,2 Dichlorobenzene	ND	ug / L	1	1	10/18/00
X00410	XG.2000.1175-1	107-06-2	1,2 Dichloroethane	ND	ug / L	1	1	10/18/00
X00410	XG.2000.1175-1	78-87-5	1,2 Dichloropropane	ND	ug / L	1	1	10/18/00
X00410	XG.2000.1175-1	96-18-4	1,2,3 Trichloropropane	ND	ug / L	1	1	10/18/00
X00410	XG.2000.1175-1	95-63-6	1,2,4-Trimethylbenzene	ND	ug / L	1	1	10/18/00
X00410	XG.2000.1175-1	541-73-1	1,3 Dichlorobenzene	ND	ug / L	1	1	10/18/00
X00410	XG.2000.1175-1	108-67-8	1,3,5-Trimethylbenzene	ND	ug / L	1	1	10/18/00
X00410	XG.2000.1175-1	764-41-0	1,4 Dichloro-2-butene	ND	ug / L	1	10	10/18/00
X00410	XG.2000.1175-1	106-46-7	1,4 Dichlorobenzene	ND	ug / L	1	1	10/18/00
X00410	XG.2000.1175-1	78-93-3	2-Butanone (MEK)	ND	ug / L	1	5	10/18/00
X00410	XG.2000.1175-1	110-75-8	2-Chloroethylvinylether	ND	ug / L	1	5	10/18/00
X00410	XG.2000.1175-1	591-78-6	2-Hexanone (MBK)	ND	ug / L	1	5	10/18/00
X00410	XG.2000.1175-1	108-10-1	4-Methyl-2-pentanone (MIBK)	ND	ug / L	1	5	10/18/00
X00410	XG.2000.1175-1	67-64-1	Acetone	ND	ug / L	1	10	10/18/00
X00410	XG.2000.1175-1	107-02-8	Acrolein	ND	ug / L	1	20	10/18/00
X00410	XG.2000.1175-1	107-13-1	Acrylonitrile	ND	ug / L	1	20	10/18/00
X00410	XG.2000.1175-1	71-43-2	Benzene	ND	ug / L	1	1	10/18/00
X00410	XG.2000.1175-1	75-27-4	Bromodichloromethane	ND	ug / L	1	1	10/18/00
[illegible]	XG.2000.1175-1	75-25-2	Bromoform	ND	ug / L	1	1	10/18/00
X00410	XG.2000.1175-1	74-83-9	Bromomethane	ND	ug / L	1	5	10/18/00
X00410	XG.2000.1175-1	75-15-0	Carbon disulfide	ND	ug / L	1	5	10/18/00
X00410	XG.2000.1175-1	56-23-5	Carbon tetrachloride	ND	ug / L	1	1	10/18/00
X00410	XG.2000.1175-1	108-90-7	Chlorobenzene	ND	ug / L	1	1	10/18/00
X00410	XG.2000.1175-1	124-48-1	Chlorodibromomethane	ND	ug / L	1	1	10/18/00
X00410	XG.2000.1175-1	75-00-3	Chloroethane	ND	ug / L	1	5	10/18/00
X00410	XG.2000.1175-1	67-66-3	Chloroform	ND	ug / L	1	1	10/18/00
X00410	XG.2000.1175-1	74-87-3	Chloromethane	ND	ug / L	1	5	10/18/00
X00410	XG.2000.1175-1	156-59-2	cis-1,2 dichloroethene	ND	ug / L	1	1	10/18/00
X00410	XG.2000.1175-1	10061-01-5	cis-1,3 dichloropropene	ND	ug / L	1	1	10/18/00
X00410	XG.2000.1175-1	74-95-3	Dibromomethane	ND	ug / L	1	1	10/18/00
X00410	XG.2000.1175-1	97-63-2	Ethyl methacrylate	ND	ug / L	1	5	10/18/00
X00410	XG.2000.1175-1	100-41-4	Ethylbenzene	ND	ug / L	1	1	10/18/00
X00410	XG.2000.1175-1		Freon 113	ND	ug / L	1	5	10/18/00
X00410	XG.2000.1175-1	75-71-8	Freon 12	ND	ug / L	1	10	10/18/00
X00410	XG.2000.1175-1	74-88-4	Iodomethane	ND	ug / L	1	5	10/18/00
X00410	XG.2000.1175-1	1634-04-4	Methyl t-butyl ether (MTBE)	ND	ug / L	1	1	10/18/00
X00410	XG.2000.1175-1	75-09-2	Methylene chloride	ND	ug / L	1	10	10/18/00
X00410	XG.2000.1175-1	91-20-3	Naphthalene	ND	ug / L	1	5	10/18/00
X00410	XG.2000.1175-1	95-47-6	o-Xylene	ND	ug / L	1	1	10/18/00
X00410	XG.2000.1175-1	108-38-3/106-42	p/m Xylenes	ND	ug / L	1	2	10/18/00
X00410	XG.2000.1175-1	100-42-5	Styrene	ND	ug / L	1	1	10/18/00
X00410	XG.2000.1175-1	156-60-5	t-1,2 Dichloroethene	ND	ug / L	1	1	10/18/00
X00410	XG.2000.1175-1	10061-02-6	t-1,3 Dichloropropene	ND	ug / L	1	1	10/18/00
[illegible]0	XG.2000.1175-1	127-18-4	Tetrachloroethene	ND	ug / L	1	1	10/18/00
[illegible]410	XG.2000.1175-1	108-88-3	Toluene	ND	ug / L	1	1	10/18/00

Quality Control Summary

Client: CH2MHILL

Project: 0010155 KAFB BULK FUEL FAC(ST106)

Explanation of codes

D *Not applicable due to sample dilut*

L *Not applicable due to MDL proximi*

X00410	XG.2000.1175-1	79-01-6	Trichloroethene	ND	ug / L	1	1	10/18/0
X00410	XG.2000.1175-1	75-69-4	Trichlorofluoromethane	ND	ug / L	1	5	10/18/0
X00410	XG.2000.1175-1	108-05-4	Vinyl acetate	ND	ug / L	1	5	10/18/0
X00410	XG.2000.1175-1	75-01-4	Vinyl chloride	ND	ug / L	1	5	10/18/0
X00410-023		**SW846 8260A Purgeable VOCs by GC/MS**						
X00410	XG.2000.1221-1	75-34-3	1,1 Dichloroethane	ND	ug / L	1	1	10/27/0
X00410	XG.2000.1221-1	75-34-3	1,1 Dichloroethene	ND	ug / L	1	1	10/27/0
X00410	XG.2000.1221-1	71-55-6	1,1,1 Trichloroethane	ND	ug / L	1	1	10/27/0
X00410	XG.2000.1221-1	630-20-6	1,1,1,2 Tetrachloroethane	ND	ug / L	1	1	10/27/0
X00410	XG.2000.1221-1	79-00-5	1,1,2 Trichloroethane	ND	ug / L	1	1	10/27/0
X00410	XG.2000.1221-1	79-34-5	1,1,2,2 Tetrachloroethane	ND	ug / L	1	1	10/27/0
X00410	XG.2000.1221-1	106-93-4	1,2 Dibromoethane (EDB)	ND	ug / L	1	1	10/27/0
X00410	XG.2000.1221-1	95-50-1	1,2 Dichlorobenzene	ND	ug / L	1	1	10/27/0
X00410	XG.2000.1221-1	107-06-2	1,2 Dichloroethane	ND	ug / L	1	1	10/27/0
X00410	XG.2000.1221-1	78-87-5	1,2 Dichloropropane	ND	ug / L	1	1	10/27/0
X00410	XG.2000.1221-1	96-18-4	1,2,3 Trichloropropane	ND	ug / L	1	1	10/27/0
X00410	XG.2000.1221-1	95-63-6	1,2,4-Trimethylbenzene	ND	ug / L	1	1	10/27/0
X00410	XG.2000.1221-1	541-73-1	1,3 Dichlorobenzene	ND	ug / L	1	1	10/27/0
X00410	XG.2000.1221-1	108-67-8	1,3,5-Trimethylbenzene	ND	ug / L	1	1	10/27/0
X00410	XG.2000.1221-1	764-41-0	1,4 Dichloro-2-butene	ND	ug / L	1	10	10/27/0
X00410	XG.2000.1221-1	106-46-7	1,4 Dichlorobenzene	ND	ug / L	1	1	10/27/0
X00410	XG.2000.1221-1	78-93-3	2-Butanone (MEK)	ND	ug / L	1	5	10/27/0
X00410	XG.2000.1221-1	110-75-8	2-Chloroethylvinylether	ND	ug / L	1	5	10/27/
X00410	XG.2000.1221-1	591-78-6	2-Hexanone (MBK)	ND	ug / L	1	5	10/27
X00410	XG.2000.1221-1	108-10-1	4-Methyl-2-pentanone (MIBK)	ND	ug / L	1	5	10/27/0
X00410	XG.2000.1221-1	67-64-1	Acetone	ND	ug / L	1	10	10/27/0
X00410	XG.2000.1221-1	107-02-8	Acrolein	ND	ug / L	1	20	10/27/0
X00410	XG.2000.1221-1	107-13-1	Acrylonitrile	ND	ug / L	1	20	10/27/0
X00410	XG.2000.1221-1	71-43-2	Benzene	ND	ug / L	1	1	10/27/0
X00410	XG.2000.1221-1	75-27-4	Bromodichloromethane	ND	ug / L	1	1	10/27/0
X00410	XG.2000.1221-1	75-25-2	Bromoform	ND	ug / L	1	1	10/27/0
X00410	XG.2000.1221-1	74-83-9	Bromomethane	ND	ug / L	1	5	10/27/0
X00410	XG.2000.1221-1	75-15-0	Carbon disulfide	ND	ug / L	1	5	10/27/0
X00410	XG.2000.1221-1	56-23-5	Carbon tetrachloride	ND	ug / L	1	1	10/27/0
X00410	XG.2000.1221-1	108-90-7	Chlorobenzene	ND	ug / L	1	1	10/27/0
X00410	XG.2000.1221-1	124-48-1	Chlorodibromomethane	ND	ug / L	1	1	10/27/0
X00410	XG.2000.1221-1	75-00-3	Chloroethane	ND	ug / L	1	5	10/27/0
X00410	XG.2000.1221-1	67-66-3	Chloroform	ND	ug / L	1	1	10/27/0
X00410	XG.2000.1221-1	74-87-3	Chloromethane	ND	ug / L	1	5	10/27/0
X00410	XG.2000.1221-1	156-59-2	cis-1,2 dichloroethene	ND	ug / L	1	1	10/27/0
X00410	XG.2000.1221-1	10061-01-5	cis-1,3 dichloropropene	ND	ug / L	1	1	10/27/0
X00410	XG.2000.1221-1	74-95-3	Dibromomethane	ND	ug / L	1	1	10/27/0
X00410	XG.2000.1221-1	97-63-2	Ethyl methacrylate	ND	ug / L	1	5	10/27/0
X00410	XG.2000.1221-1	100-41-4	Ethylbenzene	ND	ug / L	1	1	10/27/0
X00410	XG.2000.1221-1		Freon 113	ND	ug / L	1	5	10/27/0
X00410	XG.2000.1221-1	75-71-8	Freon 12	ND	ug / L	1	10	10/27/0
X00410	XG.2000.1221-1	74-88-4	Iodomethane	ND	ug / L	1	5	10/27/0
X00410	XG.2000.1221-1	1634-04-4	Methyl t-butyl ether (MTBE)	ND	ug / L	1	1	10/27/0
X00410	XG.2000.1221-1	75-09-2	Methylene chloride	ND	ug / L	1	10	10/27
X00410	XG.2000.1221-1	91-20-3	Naphthalene	ND	ug / L	1	5	10/27

Quality Control Summary

Explanation of codes

D *Not applicable due to sample dilution*
L *Not applicable due to MDL proximity*

nt: **CH2MHILL**

ject: **0010155** **KAFB BULK FUEL FAC(ST106)**

X00410	XG.2000.1221-1	95-47-6	o-Xylene	ND	ug / L	1	1	10/27/00
X00410	XG.2000.1221-1	108-38-3/106-42	p/m Xylenes	ND	ug / L	1	2	10/27/00
X00410	XG.2000.1221-1	100-42-5	Styrene	1.2	ug / L	1	1	10/27/00
X00410	XG.2000.1221-1	156-60-5	t-1,2 Dichloroethene	ND	ug / L	1	1	10/27/00
X00410	XG.2000.1221-1	10061-02-6	t-1,3 Dichloropropene	ND	ug / L	1	1	10/27/00
X00410	XG.2000.1221-1	127-18-4	Tetrachloroethene	ND	ug / L	1	1	10/27/00
X00410	XG.2000.1221-1	108-88-3	Toluene	ND	ug / L	1	1	10/27/00
X00410	XG.2000.1221-1	79-01-6	Trichloroethene	ND	ug / L	1	1	10/27/00
X00410	XG.2000.1221-1	75-69-4	Trichlorofluoromethane	ND	ug / L	1	5	10/27/00
X00410	XG.2000.1221-1	108-05-4	Vinyl acetate	ND	ug / L	1	5	10/27/00
X00410	XG.2000.1221-1	75-01-4	Vinyl chloride	ND	ug / L	1	5	10/27/00

X00410-028 **SW846 8260A Purgeable VOCs by GC/MS**

X00410	XG.2000.1221-4	75-34-3	1,1 Dichloroethane	ND	ug / L	1	1	10/30/00
X00410	XG.2000.1221-4	75-34-3	1,1 Dichloroethene	ND	ug / L	1	1	10/30/00
X00410	XG.2000.1221-4	71-55-6	1,1,1 Trichloroethane	ND	ug / L	1	1	10/30/00
X00410	XG.2000.1221-4	630-20-6	1,1,1,2 Tetrachloroethane	ND	ug / L	1	1	10/30/00
X00410	XG.2000.1221-4	79-00-5	1,1,2 Trichloroethane	ND	ug / L	1	1	10/30/00
X00410	XG.2000.1221-4	79-34-5	1,1,2,2 Tetrachloroethane	ND	ug / L	1	1	10/30/00
X00410	XG.2000.1221-4	106-93-4	1,2 Dibromoethane (EDB)	ND	ug / L	1	1	10/30/00
X00410	XG.2000.1221-4	95-50-1	1,2 Dichlorobenzene	ND	ug / L	1	1	10/30/00
X00410	XG.2000.1221-4	107-06-2	1,2 Dichloroethane	ND	ug / L	1	1	10/30/00
X00410	XG.2000.1221-4	78-87-5	1,2 Dichloropropane	ND	ug / L	1	1	10/30/00
0	XG.2000.1221-4	96-18-4	1,2,3 Trichloropropane	ND	ug / L	1	1	10/30/00
X00410	XG.2000.1221-4	95-63-6	1,2,4-Trimethylbenzene	ND	ug / L	1	1	10/30/00
X00410	XG.2000.1221-4	541-73-1	1,3 Dichlorobenzene	ND	ug / L	1	1	10/30/00
X00410	XG.2000.1221-4	108-67-8	1,3,5-Trimethylbenzene	ND	ug / L	1	1	10/30/00
X00410	XG.2000.1221-4	764-41-0	1,4 Dichloro-2-butene	ND	ug / L	1	10	10/30/00
X00410	XG.2000.1221-4	106-46-7	1,4 Dichlorobenzene	ND	ug / L	1	1	10/30/00
X00410	XG.2000.1221-4	78-93-3	2-Butanone (MEK)	ND	ug / L	1	5	10/30/00
X00410	XG.2000.1221-4	110-75-8	2-Chloroethylvinylether	ND	ug / L	1	5	10/30/00
X00410	XG.2000.1221-4	591-78-6	2-Hexanone (MBK)	ND	ug / L	1	5	10/30/00
X00410	XG.2000.1221-4	108-10-1	4-Methyl-2-pentanone (MIBK)	ND	ug / L	1	5	10/30/00
X00410	XG.2000.1221-4	67-64-1	Acetone	ND	ug / L	1	10	10/30/00
X00410	XG.2000.1221-4	107-02-8	Acrolein	ND	ug / L	1	20	10/30/00
X00410	XG.2000.1221-4	107-13-1	Acrylonitrile	ND	ug / L	1	20	10/30/00
X00410	XG.2000.1221-4	71-43-2	Benzene	ND	ug / L	1	1	10/30/00
X00410	XG.2000.1221-4	75-27-4	Bromodichloromethane	ND	ug / L	1	1	10/30/00
X00410	XG.2000.1221-4	75-25-2	Bromoform	ND	ug / L	1	1	10/30/00
X00410	XG.2000.1221-4	74-83-9	Bromomethane	ND	ug / L	1	5	10/30/00
X00410	XG.2000.1221-4	75-15-0	Carbon disulfide	ND	ug / L	1	5	10/30/00
X00410	XG.2000.1221-4	56-23-5	Carbon tetrachloride	ND	ug / L	1	1	10/30/00
X00410	XG.2000.1221-4	108-90-7	Chlorobenzene	ND	ug / L	1	1	10/30/00
X00410	XG.2000.1221-4	124-48-1	Chlorodibromomethane	ND	ug / L	1	1	10/30/00
X00410	XG.2000.1221-4	75-00-3	Chloroethane	ND	ug / L	1	5	10/30/00
X00410	XG.2000.1221-4	67-66-3	Chloroform	ND	ug / L	1	1	10/30/00
X00410	XG.2000.1221-4	74-87-3	Chloromethane	ND	ug / L	1	5	10/30/00
X00410	XG.2000.1221-4	156-59-2	cis-1,2 dichloroethene	ND	ug / L	1	1	10/30/00
X00410	XG.2000.1221-4	10061-01-5	cis-1,3 dichloropropene	ND	ug / L	1	1	10/30/00
10	XG.2000.1221-4	74-95-3	Dibromomethane	ND	ug / L	1	1	10/30/00

Quality Control Summary

Client: CH2MHILL

Project: 0010155 KAFB BULK FUEL FAC(ST106)

Explanation of codes

D : *Not applicable due to sample dilu*

L : *Not applicable due to MDL proximit*

X00410	XG.2000.1221-4	97-63-2	Ethyl methacrylate	ND	ug / L	1	5		10/30/00
X00410	XG.2000.1221-4	100-41-4	Ethylbenzene	ND	ug / L	1	1		10/30/00
X00410	XG.2000.1221-4		Freon 113	ND	ug / L	1	5		10/30/00
X00410	XG.2000.1221-4	75-71-8	Freon 12	ND	ug / L	1	10		10/30/00
X00410	XG.2000.1221-4	74-88-4	Iodomethane	ND	ug / L	1	5		10/30/00
X00410	XG.2000.1221-4	1634-04-4	Methyl t-butyl ether (MTBE)	ND	ug / L	1	1		10/30/00
X00410	XG.2000.1221-4	75-09-2	Methylene chloride	ND	ug / L	1	10		10/30/00
X00410	XG.2000.1221-4	91-20-3	Naphthalene	ND	ug / L	1	5		10/30/00
X00410	XG.2000.1221-4	95-47-6	o-Xylene	ND	ug / L	1	1		10/30/00
X00410	XG.2000.1221-4	108-38-3/106-42	p/m Xylenes	ND	ug / L	1	2		10/30/00
X00410	XG.2000.1221-4	100-42-5	Styrene	ND	ug / L	1	1		10/30/00
X00410	XG.2000.1221-4	156-60-5	t-1,2 Dichloroethene	ND	ug / L	1	1		10/30/00
X00410	XG.2000.1221-4	10061-02-6	t-1,3 Dichloropropene	ND	ug / L	1	1		10/30/00
X00410	XG.2000.1221-4	127-18-4	Tetrachloroethene	ND	ug / L	1	1		10/30/00
X00410	XG.2000.1221-4	108-88-3	Toluene	ND	ug / L	1	1		10/30/00
X00410	XG.2000.1221-4	79-01-6	Trichloroethene	ND	ug / L	1	1		10/30/00
X00410	XG.2000.1221-4	75-69-4	Trichlorofluoromethane	ND	ug / L	1	5		10/30/00
X00410	XG.2000.1221-4	108-05-4	Vinyl acetate	ND	ug / L	1	5		10/30/00
X00410	XG.2000.1221-4	75-01-4	Vinyl chloride	ND	ug / L	1	5		10/30/00

QC Type **MS: Matrix Spike** QC Matrix **WATER**

QC Group	Run Sequence	CAS #	Analyte	Result	Units	Dilution Factor	Detection Limit	Code	Run Date
X00410-006		**SW846 8260A Purgeable VOCs by GC/MS**							
X00410	XG.2000.1175-6	75-34-3	1,1 Dichloroethene	117	% Recovery	1	NA		10/18/00
X00410	XG.2000.1175-6	106-46-7	1,4 Dichlorobenzene	102	% Recovery	1	NA		10/18/00
X00410	XG.2000.1175-6	71-43-2	Benzene	117	% Recovery	1	NA		10/18/00
X00410	XG.2000.1175-6	108-90-7	Chlorobenzene	110	% Recovery	1	NA		10/18/00
X00410	XG.2000.1175-6	108-88-3	Toluene	115	% Recovery	1	NA		10/18/00
X00410	XG.2000.1175-6	79-01-6	Trichloroethene	112	% Recovery	1	NA		10/18/00

QC Type **MSD: Matrix Spike Duplicate Accuracy** QC Matrix **WATER**

QC Group	Run Sequence	CAS #	Analyte	Result	Units	Dilution Factor	Detection Limit	Code	Run Date
X00410-007		**SW846 8260A Purgeable VOCs by GC/MS**							
X00410	XG.2000.1175-7	75-34-3	1,1 Dichloroethene	109	% Recovery	1	NA		10/18/00
X00410	XG.2000.1175-7	106-46-7	1,4 Dichlorobenzene	99	% Recovery	1	NA		10/18/00
X00410	XG.2000.1175-7	71-43-2	Benzene	112	% Recovery	1	NA		10/18/00
X00410	XG.2000.1175-7	108-90-7	Chlorobenzene	106	% Recovery	1	NA		10/18/00
X00410	XG.2000.1175-7	108-88-3	Toluene	110	% Recovery	1	NA		10/18/00
X00410	XG.2000.1175-7	79-01-6	Trichloroethene	107	% Recovery	1	NA		10/18/00

Quality Control Summary

Client: **CH2MHILL**

ect: **0010155** **KAFB BULK FUEL FAC(ST106)**

Explanation of codes

D *Not applicable due to sample dilution*

L *Not applicable due to MDL proximity*

QC Type **MSD: Matrix Spike Duplicate Precision** QC Matrix **WATER**

QC Group	Run Sequence	CAS #	Analyte	Result	Units	Dilution Factor	Detection Limit	Code	Run Date
X00410-007		**SW846 8260A Purgeable VOCs by GC/MS**							
X00410	XG.2000.1175-7	75-34-3	1,1 Dichloroethene	7	RPD	1	NA		10/18/00
X00410	XG.2000.1175-7	106-46-7	1,4 Dichlorobenzene	4	RPD	1	NA		10/18/00
X00410	XG.2000.1175-7	71-43-2	Benzene	4	RPD	1	NA		10/18/00
X00410	XG.2000.1175-7	108-90-7	Chlorobenzene	4	RPD	1	NA		10/18/00
X00410	XG.2000.1175-7	108-88-3	Toluene	4	RPD	1	NA		10/18/00
X00410	XG.2000.1175-7	79-01-6	Trichloroethene	5	RPD	1	NA		10/18/00

Surrogate Summary: QC

Client: CH2MHILL

Project: 0010155 KAFB BULK FUEL FAC(ST106)

QC Type: **LCS** QC Matrix: **SOLID**

QC Group	Run Sequence	CAS #	Analyte	Result	Units	Dilution Factor	Detection Limit	Code	Run Date
X00392-002		BTEXALL							
X00392	XG.2000.1112-2	NA	4-Bromofluorobenzene	99	% Recovery	1	NA		10/05/00
X00392	XG.2000.1112-2	NA	aaa-Trifluorotoluene	100	% Recovery	1	NA		10/05/00
X00392	XG.2000.1112-2	NA	Bromochloromethane	ND	% Recovery	1	NA		10/05/00
X00392	XG.2000.1112-2	NA	Bromochloropropane	ND	% Recovery	1	NA		10/05/00
X00392	XG.2000.1112-2	NA	Dichlorobutane	ND	% Recovery	1	NA		10/05/00
X00398-005		8260							
X00398	XG.2000.1158-3	NA	1,2 Dichloroethane-D4 (SS)	87	% Recovery	1	NA		10/10/00
X00398	XG.2000.1206-2	NA	1,2 Dichloroethane-D4 (SS)	87	% Recovery	1	NA		10/10/00
X00398	XG.2000.1158-3	NA	4-Bromofluorobenzene (SS)	98	% Recovery	1	NA		10/10/00
X00398	XG.2000.1206-2	NA	4-Bromofluorobenzene (SS)	98	% Recovery	1	NA		10/10/00
X00398	XG.2000.1158-3	NA	Dibromofluoromethane (SS)	98	% Recovery	1	NA		10/10/00
X00398	XG.2000.1206-2	NA	Dibromofluoromethane (SS)	98	% Recovery	1	NA		10/10/00
X00398	XG.2000.1158-3	NA	Toluene-D8 (SS)	100	% Recovery	1	NA		10/10/00
X00398	XG.2000.1206-2	NA	Toluene-D8 (SS)	100	% Recovery	1	NA		10/10/00
X00403-002		DRO							
3	XG.2000.1139-2	NA	O-terphenyl	99	% Recovery	1	NA		10/13/00
X00406-002		8270							
X00406	XG.2000.1171-2	NA	*2,4,6-TRIBROMOPHENOL	87	% Recovery	1	NA		10/17/00
X00406	XG.2000.1171-2	NA	*2-FLUOROBIPHENYL	84	% Recovery	1	NA		10/17/00
X00406	XG.2000.1171-2	NA	*2-FLUOROPHENOL	77	% Recovery	1	NA		10/17/00
X00406	XG.2000.1171-2	NA	*NITROBENZENE-D5	80	% Recovery	1	NA		10/17/00
X00406	XG.2000.1171-2	NA	*PHENOL-D6	83	% Recovery	1	NA		10/17/00
X00406	XG.2000.1171-2	NA	*TERPHENYL-D14	88	% Recovery	1	NA		10/17/00
X00408-002		GRO							
X00408	XG.2000.1155-2	NA	4-Bromofluorobenzene-FID	102	% Recovery	1	NA		10/16/00
X00408	XG.2000.1155-2	NA	4-Bromofluorobenzene-PID	ND	% Recovery	1	NA		10/16/00
X00408	XG.2000.1155-2	NA	aaa-Trifluorotoluene-FID	105	% Recovery	1	NA		10/16/00
X00408	XG.2000.1155-2	NA	aaa-Trifluorotoluene-PID	ND	% Recovery	1	NA		10/16/00

QC Type: **LCSD** QC Matrix: **SOLID**

QC Group	Run Sequence	CAS #	Analyte	Result	Units	Dilution Factor	Detection Limit	Code	Run Date
X00392-003		BTEXALL							
X00392	XG.2000.1112-3	NA	4-Bromofluorobenzene	100	% Recovery	1	NA		10/05/00
X00392	XG.2000.1112-3	NA	aaa-Trifluorotoluene	99	% Recovery	1	NA		10/05/00
X00392	XG.2000.1112-3	NA	Bromochloromethane	ND	% Recovery	1	NA		10/05/00
92	XG.2000.1112-3	NA	Bromochloropropane	ND	% Recovery	1	NA		10/05/00
02	XG.2000.1112-3	NA	Dichlorobutane	ND	% Recovery	1	NA		10/05/00

Surrogate Summary: QC

Client: CH2MHILL

Project: 0010155 KAFB BULK FUEL FAC(ST106)

X00398-006		8260							
X00398	XG.2000.1158-4	NA	1,2 Dichloroethane-D4 (SS)	90	% Recovery	1	NA		10/10/0
X00398	XG.2000.1206-3	NA	1,2 Dichloroethane-D4 (SS)	90	% Recovery	1	NA		10/10/0
X00398	XG.2000.1158-4	NA	4-Bromofluorobenzene (SS)	100	% Recovery	1	NA		10/10/0
X00398	XG.2000.1206-3	NA	4-Bromofluorobenzene (SS)	100	% Recovery	1	NA		10/10/0
X00398	XG.2000.1158-4	NA	Dibromofluoromethane (SS)	99	% Recovery	1	NA		10/10/0
X00398	XG.2000.1206-3	NA	Dibromofluoromethane (SS)	99	% Recovery	1	NA		10/10/0
X00398	XG.2000.1158-4	NA	Toluene-D8 (SS)	101	% Recovery	1	NA		10/10/0
X00398	XG.2000.1206-3	NA	Toluene-D8 (SS)	101	% Recovery	1	NA		10/10/0
X00403-003		DRO							
X00403	XG.2000.1139-3	NA	O-terphenyl	96	% Recovery	1	NA		10/13/0
X00406-003		8270							
X00406	XG.2000.1171-3	NA	*2,4,6-TRIBROMOPHENOL	87	% Recovery	1	NA		10/17/0
X00406	XG.2000.1171-3	NA	*2-FLUOROBIPHENYL	83	% Recovery	1	NA		10/17/0
X00406	XG.2000.1171-3	NA	*2-FLUOROPHENOL	77	% Recovery	1	NA		10/17/0
X00406	XG.2000.1171-3	NA	*NITROBENZENE-D5	80	% Recovery	1	NA		10/17/0
X00406	XG.2000.1171-3	NA	*PHENOL-D6	82	% Recovery	1	NA		10/17/0
X00406	XG.2000.1171-3	NA	*TERPHENYL-D14	88	% Recovery	1	NA		10/17/0
X00408-003		GRO							
X00408	XG.2000.1155-3	NA	4-Bromofluorobenzene-FID	102	% Recovery	1	NA		10/16/0
X00408	XG.2000.1155-3	NA	4-Bromofluorobenzene-PID	ND	% Recovery	1	NA		10/16/0
X00408	XG.2000.1155-3	NA	aaa-Trifluorotoluene-FID	104	% Recovery	1	NA		10/1
X00408	XG.2000.1155-3	NA	aaa-Trifluorotoluene-PID	ND	% Recovery	1	NA		10/16/

QC Type **MB** QC Matrix **SOLID**

QC Group	Run Sequence	CAS #	Analyte	Result	Units	Dilution Factor	Detection Limit	Code	Run Date
X00392-001		BTEXALL							
X00392	XG.2000.1112-1	NA	4-Bromofluorobenzene	98	% Recovery	1	NA		10/05/0
X00392	XG.2000.1112-1	NA	aaa-Trifluorotoluene	102	% Recovery	1	NA		10/05/0
X00392	XG.2000.1112-1	NA	Bromochloromethane	ND	% Recovery	1	NA		10/05/0
X00392	XG.2000.1112-1	NA	Bromochloropropane	ND	% Recovery	1	NA		10/05/0
X00392	XG.2000.1112-1	NA	Dichlorobutane	ND	% Recovery	1	NA		10/05/0
X00392-014		BTEXALL							
X00392	XG.2000.1156-1	NA	4-Bromofluorobenzene	99	% Recovery	1	NA		10/17/0
X00392	XG.2000.1156-1	NA	aaa-Trifluorotoluene	101	% Recovery	1	NA		10/17/0
X00392	XG.2000.1156-1	NA	Bromochloromethane	24	% Recovery	1	NA		10/17/0
X00392	XG.2000.1156-1	NA	Bromochloropropane	24	% Recovery	1	NA		10/17/0
X00392	XG.2000.1156-1	NA	Dichlorobutane	30	% Recovery	1	NA		10/17/0
X00392-024		BTEXALL							
X00392	XG.2000.1164-4	NA	4-Bromofluorobenzene	99	% Recovery	1	NA		10/18/0
X00392	XG.2000.1164-4	NA	aaa-Trifluorotoluene	101	% Recovery	1	NA		10/18/0
X00392	XG.2000.1164-4	NA	Bromochloromethane	93	% Recovery	1	NA		10/18/0
X00392	XG.2000.1164-4	NA	Bromochloropropane	75	% Recovery	1	NA		10/18
X00392	XG.2000.1164-4	NA	Dichlorobutane	71	% Recovery	1	NA		10/18/

Surrogate Summary: QC

Client: CH2MHILL

Project: 0010155 KAFB BULK FUEL FAC(ST106)

X00398-001		8260						
X00398	XG.2000.1158-1	NA	1,2 Dichloroethane-D4 (SS)	93	% Recovery	1	NA	10/10/00
X00398	XG.2000.1206-1	NA	1,2 Dichloroethane-D4 (SS)	93	% Recovery	1	NA	10/10/00
X00398	XG.2000.1158-1	NA	4-Bromofluorobenzene (SS)	100	% Recovery	1	NA	10/10/00
X00398	XG.2000.1206-1	NA	4-Bromofluorobenzene (SS)	100	% Recovery	1	NA	10/10/00
X00398	XG.2000.1158-1	NA	Dibromofluoromethane (SS)	99	% Recovery	1	NA	10/10/00
X00398	XG.2000.1206-1	NA	Dibromofluoromethane (SS)	99	% Recovery	1	NA	10/10/00
X00398	XG.2000.1158-1	NA	Toluene-D8 (SS)	102	% Recovery	1	NA	10/10/00
X00398	XG.2000.1206-1	NA	Toluene-D8 (SS)	102	% Recovery	1	NA	10/10/00
X00398-007		8260						
X00398	XG.2000.1158-5	NA	1,2 Dichloroethane-D4 (SS)	93	% Recovery	1	NA	10/16/00
X00398	XG.2000.1206-4	NA	1,2 Dichloroethane-D4 (SS)	93	% Recovery	1	NA	10/16/00
X00398	XG.2000.1158-5	NA	4-Bromofluorobenzene (SS)	99	% Recovery	1	NA	10/16/00
X00398	XG.2000.1206-4	NA	4-Bromofluorobenzene (SS)	99	% Recovery	1	NA	10/16/00
X00398	XG.2000.1158-5	NA	Dibromofluoromethane (SS)	99	% Recovery	1	NA	10/16/00
X00398	XG.2000.1206-4	NA	Dibromofluoromethane (SS)	99	% Recovery	1	NA	10/16/00
X00398	XG.2000.1158-5	NA	Toluene-D8 (SS)	100	% Recovery	1	NA	10/16/00
X00398	XG.2000.1206-4	NA	Toluene-D8 (SS)	100	% Recovery	1	NA	10/16/00
X00398-018		8260						
X00398	XG.2000.1158-12	NA	1,2 Dichloroethane-D4 (SS)	100	% Recovery	1	NA	10/17/00
X00398	XG.2000.1205-1	NA	1,2 Dichloroethane-D4 (SS)	100	% Recovery	1	NA	10/17/00
X00398	XG.2000.1206-7	NA	1,2 Dichloroethane-D4 (SS)	100	% Recovery	1	NA	10/17/00
X00398	XG.2000.1158-12	NA	4-Bromofluorobenzene (SS)	105	% Recovery	1	NA	10/17/00
X00398	XG.2000.1205-1	NA	4-Bromofluorobenzene (SS)	105	% Recovery	1	NA	10/17/00
X00398	XG.2000.1206-7	NA	4-Bromofluorobenzene (SS)	105	% Recovery	1	NA	10/17/00
X00398	XG.2000.1158-12	NA	Dibromofluoromethane (SS)	102	% Recovery	1	NA	10/17/00
X00398	XG.2000.1205-1	NA	Dibromofluoromethane (SS)	102	% Recovery	1	NA	10/17/00
X00398	XG.2000.1206-7	NA	Dibromofluoromethane (SS)	102	% Recovery	1	NA	10/17/00
X00398	XG.2000.1158-12	NA	Toluene-D8 (SS)	103	% Recovery	1	NA	10/17/00
X00398	XG.2000.1205-1	NA	Toluene-D8 (SS)	103	% Recovery	1	NA	10/17/00
X00398	XG.2000.1206-7	NA	Toluene-D8 (SS)	103	% Recovery	1	NA	10/17/00
X00398-028		8260						
X00398	XG.2000.1205-3	NA	1,2 Dichloroethane-D4 (SS)	99	% Recovery	1	NA	10/26/00
X00398	XG.2000.1206-9	NA	1,2 Dichloroethane-D4 (SS)	99	% Recovery	1	NA	10/26/00
X00398	XG.2000.1205-3	NA	4-Bromofluorobenzene (SS)	101	% Recovery	1	NA	10/26/00
X00398	XG.2000.1206-9	NA	4-Bromofluorobenzene (SS)	101	% Recovery	1	NA	10/26/00
X00398	XG.2000.1205-3	NA	Dibromofluoromethane (SS)	101	% Recovery	1	NA	10/26/00
X00398	XG.2000.1206-9	NA	Dibromofluoromethane (SS)	101	% Recovery	1	NA	10/26/00
X00398	XG.2000.1205-3	NA	Toluene-D8 (SS)	100	% Recovery	1	NA	10/26/00
X00398	XG.2000.1206-9	NA	Toluene-D8 (SS)	100	% Recovery	1	NA	10/26/00
X00403-001		DRO						
X00403	XG.2000.1139-1	NA	O-terphenyl	85	% Recovery	1	NA	10/13/00
X00403-017		DRO						
X00403	XG.2000.1150-1	NA	O-terphenyl	88	% Recovery	1	NA	10/16/00
X00406-001		8270						
X00406	XG.2000.1171-1	NA	*2,4,6-TRIBROMOPHENOL	89	% Recovery	1	NA	10/17/00
X00406	XG.2000.1171-1	NA	*2-FLUOROBIPHENYL	88	% Recovery	1	NA	10/17/00

Surrogate Summary: QC

Client: **CH2MHILL**

Project: **0010155** **KAFB BULK FUEL FAC(ST106)**

X00406	XG.2000.1171-1	NA	*2-FLUOROPHENOL	85	% Recovery	1	NA		10/17/0(
X00406	XG.2000.1171-1	NA	*NITROBENZENE-D5	86	% Recovery	1	NA		10/17/0(
X00406	XG.2000.1171-1	NA	*PHENOL-D6	86	% Recovery	1	NA		10/17/0(
X00406	XG.2000.1171-1	NA	*TERPHENYL-D14	94	% Recovery	1	NA		10/17/0(
X00406-010		**8270**							
X00406	XG.2000.1184-1	NA	*2,4,6-TRIBROMOPHENOL	81	% Recovery	1	NA		10/19/0(
X00406	XG.2000.1184-1	NA	*2-FLUOROBIPHENYL	74	% Recovery	1	NA		10/19/0(
X00406	XG.2000.1184-1	NA	*2-FLUOROPHENOL	60	% Recovery	1	NA		10/19/0(
X00406	XG.2000.1184-1	NA	*NITROBENZENE-D5	66	% Recovery	1	NA		10/19/0(
X00406	XG.2000.1184-1	NA	*PHENOL-D6	61	% Recovery	1	NA		10/19/0(
X00406	XG.2000.1184-1	NA	*TERPHENYL-D14	85	% Recovery	1	NA		10/19/0(
X00408-001		**GRO**							
X00408	XG.2000.1155-1	NA	4-Bromofluorobenzene-FID	91	% Recovery	1	NA		10/16/0(
X00408	XG.2000.1155-1	NA	4-Bromofluorobenzene-PID	ND	% Recovery	1	NA		10/16/0(
X00408	XG.2000.1155-1	NA	aaa-Trifluorotoluene-FID	99	% Recovery	1	NA		10/16/0(
X00408	XG.2000.1155-1	NA	aaa-Trifluorotoluene-PID	ND	% Recovery	1	NA		10/16/0(
X00408-026		**GRO**							
X00408	XG.2000.1161-1	NA	4-Bromofluorobenzene-FID	92	% Recovery	1	NA		10/18/0(
X00408	XG.2000.1161-1	NA	4-Bromofluorobenzene-PID	ND	% Recovery	1	NA		10/18/0(
X00408	XG.2000.1161-1	NA	aaa-Trifluorotoluene-FID	97	% Recovery	1	NA		10/18/0(
X00408	XG.2000.1161-1	NA	aaa-Trifluorotoluene-PID	ND	% Recovery	1	NA		10/18/0(

QC Type **MS** QC Matrix **SOLID**

QC Group	Run Sequence	CAS #	Analyte	Result	Units	Dilution Factor	Detection Limit	Code	Run Date
X00392-005		**BTEXALL**							
X00392	XG.2000.1112-5	NA	4-Bromofluorobenzene	102	% Recovery	1	NA		10/05/0(
X00392	XG.2000.1112-5	NA	aaa-Trifluorotoluene	100	% Recovery	1	NA		10/05/0(
X00392	XG.2000.1112-5	NA	Bromochloromethane	ND	% Recovery	1	NA		10/05/0(
X00392	XG.2000.1112-5	NA	Bromochloropropane	ND	% Recovery	1	NA		10/05/0(
X00392	XG.2000.1112-5	NA	Dichlorobutane	ND	% Recovery	1	NA		10/05/0(
X00398-016		**8260**							
X00398	XG.2000.1158-10	NA	1,2 Dichloroethane-D4 (SS)	91	% Recovery	1	NA		10/17/0(
X00398	XG.2000.1206-5	NA	1,2 Dichloroethane-D4 (SS)	91	% Recovery	1	NA		10/17/0(
X00398	XG.2000.1158-10	NA	4-Bromofluorobenzene (SS)	100	% Recovery	1	NA		10/17/0(
X00398	XG.2000.1206-5	NA	4-Bromofluorobenzene (SS)	100	% Recovery	1	NA		10/17/0(
X00398	XG.2000.1158-10	NA	Dibromofluoromethane (SS)	90	% Recovery	1	NA		10/17/0(
X00398	XG.2000.1206-5	NA	Dibromofluoromethane (SS)	90	% Recovery	1	NA		10/17/0(
X00398	XG.2000.1158-10	NA	Toluene-D8 (SS)	101	% Recovery	1	NA		10/17/0(
X00398	XG.2000.1206-5	NA	Toluene-D8 (SS)	101	% Recovery	1	NA		10/17/0(
X00403-005		**DRO**							
X00403	XG.2000.1139-5	NA	O-terphenyl	99	% Recovery	1	NA		10/13/0(
X00408-023		**GRO**							
X00408	XG.2000.1155-15	NA	4-Bromofluorobenzene-FID	95	% Recovery	1	NA		10/1[illegible]
X00408	XG.2000.1155-15	NA	4-Bromofluorobenzene-PID	ND	% Recovery	1	NA		10/17/0[illegible]

Surrogate Summary: QC

nt: CH2MHILL

Project: 0010155 KAFB BULK FUEL FAC(ST106)

X00408	XG.2000.1155-15	NA	aaa-Trifluorotoluene-FID	99	% Recovery	1	NA		10/17/00
X00408	XG.2000.1155-15	NA	aaa-Trifluorotoluene-PID	ND	% Recovery	1	NA		10/17/00

QC Type **MSD** QC Matrix **SOLID**

QC Group	Run Sequence	CAS #	Analyte	Result	Units	Dilution Factor	Detection Limit	Code	Run Date
X00392-006		BTEXALL							
X00392	XG.2000.1112-6	NA	4-Bromofluorobenzene	101	% Recovery	1	NA		10/05/00
X00392	XG.2000.1112-6	NA	aaa-Trifluorotoluene	99	% Recovery	1	NA		10/05/00
X00392	XG.2000.1112-6	NA	Bromochloromethane	ND	% Recovery	1	NA		10/05/00
X00392	XG.2000.1112-6	NA	Bromochloropropane	ND	% Recovery	1	NA		10/05/00
X00392	XG.2000.1112-6	NA	Dichlorobutane	ND	% Recovery	1	NA		10/05/00
X00398-017		8260							
X00398	XG.2000.1158-11	NA	1,2 Dichloroethane-D4 (SS)	95	% Recovery	1	NA		10/17/00
X00398	XG.2000.1206-6	NA	1,2 Dichloroethane-D4 (SS)	95	% Recovery	1	NA		10/17/00
X00398	XG.2000.1158-11	NA	4-Bromofluorobenzene (SS)	102	% Recovery	1	NA		10/17/00
X00398	XG.2000.1206-6	NA	4-Bromofluorobenzene (SS)	102	% Recovery	1	NA		10/17/00
X00398	XG.2000.1158-11	NA	Dibromofluoromethane (SS)	89	% Recovery	1	NA		10/17/00
X00398	XG.2000.1206-6	NA	Dibromofluoromethane (SS)	89	% Recovery	1	NA		10/17/00
[illegible]8	XG.2000.1158-11	NA	Toluene-D8 (SS)	101	% Recovery	1	NA		10/17/00
[illegible]8	XG.2000.1206-6	NA	Toluene-D8 (SS)	101	% Recovery	1	NA		10/17/00
X00403-006		DRO							
X00403	XG.2000.1139-6	NA	O-terphenyl	99	% Recovery	1	NA		10/13/00
X00408-024		GRO							
X00408	XG.2000.1155-16	NA	4-Bromofluorobenzene-FID	103	% Recovery	1	NA		10/17/00
X00408	XG.2000.1155-16	NA	4-Bromofluorobenzene-PID	ND	% Recovery	1	NA		10/17/00
X00408	XG.2000.1155-16	NA	aaa-Trifluorotoluene-FID	103	% Recovery	1	NA		10/17/00
X00408	XG.2000.1155-16	NA	aaa-Trifluorotoluene-PID	ND	% Recovery	1	NA		10/17/00

QC Type **LCS** QC Matrix **WATER**

QC Group	Run Sequence	CAS #	Analyte	Result	Units	Dilution Factor	Detection Limit	Code	Run Date
X00410-008		8260							
X00410	XG.2000.1175-8	NA	1,2 Dichloroethane-D4 (SS)	99	% Recovery	1	NA		10/18/00
X00410	XG.2000.1175-8	NA	4-Bromofluorobenzene (SS)	102	% Recovery	1	NA		10/18/00
X00410	XG.2000.1175-8	NA	Dibromofluoromethane (SS)	101	% Recovery	1	NA		10/18/00
X00410	XG.2000.1175-8	NA	Toluene-D8 (SS)	100	% Recovery	1	NA		10/18/00

Surrogate Summary: QC

Client: **CH2MHILL**

Project: **0010155** **KAFB BULK FUEL FAC(ST106)**

QC Type **LCSD** QC Matrix **WATER**

QC Group	Run Sequence	CAS #	Analyte	Result	Units	Dilution Factor	Detection Limit	Code	Run Date
X00410-009		8260							
X00410	XG.2000.1175-9	NA	1,2 Dichloroethane-D4 (SS)	103	% Recovery	1	NA		10/18/00
X00410	XG.2000.1175-9	NA	4-Bromofluorobenzene (SS)	104	% Recovery	1	NA		10/18/00
X00410	XG.2000.1175-9	NA	Dibromofluoromethane (SS)	102	% Recovery	1	NA		10/18/00
X00410	XG.2000.1175-9	NA	Toluene-D8 (SS)	101	% Recovery	1	NA		10/18/00

QC Type **MB** QC Matrix **WATER**

QC Group	Run Sequence	CAS #	Analyte	Result	Units	Dilution Factor	Detection Limit	Code	Run Date
X00410-001		8260							
X00410	XG.2000.1175-1	NA	1,2 Dichloroethane-D4 (SS)	90	% Recovery	1	NA		10/18/00
X00410	XG.2000.1175-1	NA	4-Bromofluorobenzene (SS)	99	% Recovery	1	NA		10/18/00
X00410	XG.2000.1175-1	NA	Dibromofluoromethane (SS)	98	% Recovery	1	NA		10/18/00
X00410	XG.2000.1175-1	NA	Toluene-D8 (SS)	99	% Recovery	1	NA		10/18/00
X00410-023		8260							
X00410	XG.2000.1221-1	NA	1,2 Dichloroethane-D4 (SS)	86	% Recovery	1	NA		10/27/00
X00410	XG.2000.1221-1	NA	4-Bromofluorobenzene (SS)	96	% Recovery	1	NA		10/27/00
X00410	XG.2000.1221-1	NA	Dibromofluoromethane (SS)	97	% Recovery	1	NA		10/27/00
X00410	XG.2000.1221-1	NA	Toluene-D8 (SS)	98	% Recovery	1	NA		10/27/00
X00410-028		8260							
X00410	XG.2000.1221-4	NA	1,2 Dichloroethane-D4 (SS)	91	% Recovery	1	NA		10/30/00
X00410	XG.2000.1221-4	NA	4-Bromofluorobenzene (SS)	98	% Recovery	1	NA		10/30/00
X00410	XG.2000.1221-4	NA	Dibromofluoromethane (SS)	100	% Recovery	1	NA		10/30/00
X00410	XG.2000.1221-4	NA	Toluene-D8 (SS)	100	% Recovery	1	NA		10/30/00

QC Type **MS** QC Matrix **WATER**

QC Group	Run Sequence	CAS #	Analyte	Result	Units	Dilution Factor	Detection Limit	Code	Run Date
X00410-006		8260							
X00410	XG.2000.1175-6	NA	1,2 Dichloroethane-D4 (SS)	109	% Recovery	1	NA		10/18/00
X00410	XG.2000.1175-6	NA	4-Bromofluorobenzene (SS)	105	% Recovery	1	NA		10/18/00
X00410	XG.2000.1175-6	NA	Dibromofluoromethane (SS)	103	% Recovery	1	NA		10/18/00
X00410	XG.2000.1175-6	NA	Toluene-D8 (SS)	102	% Recovery	1	NA		10/18/00

Surrogate Summary: QC

Client: CH2MHILL

Project: 0010155 KAFB BULK FUEL FAC(ST106)

QC Type: **MSD** QC Matrix: **WATER**

QC Group	Run Sequence	CAS #	Analyte	Result	Units	Dilution Factor	Detection Limit	Code	Run Date
X00410-007		**8260**							
X00410	XG.2000.1175-7	NA	1,2 Dichloroethane-D4 (SS)	110	% Recovery	1	NA		10/18/00
X00410	XG.2000.1175-7	NA	4-Bromofluorobenzene (SS)	105	% Recovery	1	NA		10/18/00
X00410	XG.2000.1175-7	NA	Dibromofluoromethane (SS)	105	% Recovery	1	NA		10/18/00
X00410	XG.2000.1175-7	NA	Toluene-D8 (SS)	103	% Recovery	1	NA		10/18/00

Surrogate Summary: Fraction

Client: CH2MHILL

ct: 0010155 KAFB BULK FUEL FAC(ST106)

Client Sample ID: **SB-27-95'** Sample Matrix: **SOIL**

QC Group	Run Sequence	CAS #	Analyte	Result	Units	Dilution Factor	Detection Limit	Code	Run Date
0010155-01A		DRO							X00403-018
X00403	XG.2000.1150-18	NA	O-terphenyl	86	% Recovery	1	NA		10/17/00
0010155-01A		GRO							X00408-006
X00408	XG.2000.1155-4	NA	4-Bromofluorobenzene-FID	100	% Recovery	1	NA		10/16/00
X00408	XG.2000.1155-4	NA	4-Bromofluorobenzene-PID	ND	% Recovery	1	NA		10/16/00
X00408	XG.2000.1155-4	NA	aaa-Trifluorotoluene-FID	128	% Recovery	1	NA		10/16/00
X00408	XG.2000.1155-4	NA	aaa-Trifluorotoluene-PID	ND	% Recovery	1	NA		10/16/00

Client Sample ID: **SB-27-105'** Sample Matrix: **SOIL**

QC Group	Run Sequence	CAS #	Analyte	Result	Units	Dilution Factor	Detection Limit	Code	Run Date
0010155-02A		DRO							X00403-019
X00403	XG.2000.1150-19	NA	O-terphenyl	92	% Recovery	1	NA		10/17/00
55-02A		GRO							X00408-007
X00408	XG.2000.1155-5	NA	4-Bromofluorobenzene-FID	112	% Recovery	1	NA		10/16/00
X00408	XG.2000.1155-5	NA	4-Bromofluorobenzene-PID	ND	% Recovery	1	NA		10/16/00
X00408	XG.2000.1155-5	NA	aaa-Trifluorotoluene-FID	140	% Recovery	1	NA		10/16/00
X00408	XG.2000.1155-5	NA	aaa-Trifluorotoluene-PID	ND	% Recovery	1	NA		10/16/00

Client Sample ID: **SB-27-125'** Sample Matrix: **SOIL**

QC Group	Run Sequence	CAS #	Analyte	Result	Units	Dilution Factor	Detection Limit	Code	Run Date
0010155-03A		DRO							X00403-020
X00403	XG.2000.1150-2	NA	O-terphenyl	106	% Recovery	10	NA		10/16/00
0010155-03A		GRO							X00408-027
X00408	XG.2000.1161-2	NA	4-Bromofluorobenzene-FID	119	% Recovery	2000	NA		10/18/00
X00408	XG.2000.1161-2	NA	4-Bromofluorobenzene-PID	ND	% Recovery	2000	NA		10/18/00
X00408	XG.2000.1161-2	NA	aaa-Trifluorotoluene-FID	91	% Recovery	2000	NA		10/18/00
X00408	XG.2000.1161-2	NA	aaa-Trifluorotoluene-PID	ND	% Recovery	2000	NA		10/18/00
0010155-03B		8260							X00398-008
X00398	XG.2000.1158-6	NA	1,2 Dichloroethane-D4 (SS)	95	% Recovery	100	NA		10/16/00
X00398	XG.2000.1173-1	NA	1,2 Dichloroethane-D4 (SS)	95	% Recovery	100	NA		10/16/00
X00398	XG.2000.1158-6	NA	4-Bromofluorobenzene (SS)	120	% Recovery	100	NA		10/16/00
X00398	XG.2000.1173-1	NA	4-Bromofluorobenzene (SS)	120	% Recovery	100	NA		10/16/00
X00398	XG.2000.1158-6	NA	Dibromofluoromethane (SS)	107	% Recovery	100	NA		10/16/00
8	XG.2000.1173-1	NA	Dibromofluoromethane (SS)	107	% Recovery	100	NA		10/16/00

Surrogate Summary: Fraction

Client: CH2MHILL

Project: 0010155 KAFB BULK FUEL FAC(ST106)

X00398	XG.2000.1158-6	NA	Toluene-D8 (SS)	174	% Recovery	100	NA	10/16/00
X00398	XG.2000.1173-1	NA	Toluene-D8 (SS)	174	% Recovery	100	NA	10/16/00
0010155-03B		8260						X00398-025
X00398	XG.2000.1158-19	NA	1,2 Dichloroethane-D4 (SS)	101	% Recovery	1000	NA	10/17/00
X00398	XG.2000.1158-19	NA	4-Bromofluorobenzene (SS)	99	% Recovery	1000	NA	10/17/00
X00398	XG.2000.1158-19	NA	Dibromofluoromethane (SS)	105	% Recovery	1000	NA	10/17/00
X00398	XG.2000.1158-19	NA	Toluene-D8 (SS)	108	% Recovery	1000	NA	10/17/00

Client Sample ID: **SPIKE (SB-27-125')** Sample Matrix: **SOIL**

QC Group	Run Sequence	CAS #	Analyte	Result	Units	Dilution Factor	Detection Limit	Code	Run Date
0010155-04A		DRO							X00403-021
X00403	XG.2000.1150-3	NA	O-terphenyl	108	% Recovery	10	NA		10/16/00
0010155-04A		GRO							X00408-028
X00408	XG.2000.1161-3	NA	4-Bromofluorobenzene-FID	128	% Recovery	2000	NA		10/18/00
X00408	XG.2000.1161-3	NA	4-Bromofluorobenzene-PID	ND	% Recovery	2000	NA		10/18/00
X00408	XG.2000.1161-3	NA	aaa-Trifluorotoluene-FID	85	% Recovery	2000	NA		10/18/00
X00408	XG.2000.1161-3	NA	aaa-Trifluorotoluene-PID	ND	% Recovery	2000	NA		10/18/00
0010155-04B		8260							X00398-[illegible]
X00398	XG.2000.1158-7	NA	1,2 Dichloroethane-D4 (SS)	93	% Recovery	100	NA		10/16
X00398	XG.2000.1173-2	NA	1,2 Dichloroethane-D4 (SS)	93	% Recovery	100	NA		10/16/00
X00398	XG.2000.1158-7	NA	4-Bromofluorobenzene (SS)	110	% Recovery	100	NA		10/16/00
X00398	XG.2000.1173-2	NA	4-Bromofluorobenzene (SS)	110	% Recovery	100	NA		10/16/00
X00398	XG.2000.1158-7	NA	Dibromofluoromethane (SS)	104	% Recovery	100	NA		10/16/00
X00398	XG.2000.1173-2	NA	Dibromofluoromethane (SS)	104	% Recovery	100	NA		10/16/00
X00398	XG.2000.1158-7	NA	Toluene-D8 (SS)	136	% Recovery	100	NA		10/16/00
X00398	XG.2000.1173-2	NA	Toluene-D8 (SS)	136	% Recovery	100	NA		10/16/00
0010155-04B		8260							X00398-024
X00398	XG.2000.1158-18	NA	1,2 Dichloroethane-D4 (SS)	98	% Recovery	1000	NA		10/17/00
X00398	XG.2000.1158-18	NA	4-Bromofluorobenzene (SS)	99	% Recovery	1000	NA		10/17/00
X00398	XG.2000.1158-18	NA	Dibromofluoromethane (SS)	102	% Recovery	1000	NA		10/17/00
X00398	XG.2000.1158-18	NA	Toluene-D8 (SS)	104	% Recovery	1000	NA		10/17/00

Client Sample ID: **SPIKE DUP (SB-27-125')** Sample Matrix: **SOIL**

QC Group	Run Sequence	CAS #	Analyte	Result	Units	Dilution Factor	Detection Limit	Code	Run Date
0010155-05A		DRO							X00403-022
X00403	XG.2000.1150-4	NA	O-terphenyl	88	% Recovery	10	NA		10/16/00
0010155-05A		GRO							X00408-029
X00408	XG.2000.1161-4	NA	4-Bromofluorobenzene-FID	116	% Recovery	2000	NA		10/18/00
X00408	XG.2000.1161-4	NA	4-Bromofluorobenzene-PID	ND	% Recovery	2000	NA		10/18/0
X00408	XG.2000.1161-4	NA	aaa-Trifluorotoluene-FID	93	% Recovery	2000	NA		10/18

Surrogate Summary: Fraction

Client: CH2MHILL

Project: 0010155 KAFB BULK FUEL FAC(ST106)

X00398	XG.2000.1161-4	NA	aaa-Trifluorotoluene-PID	ND	% Recovery	2000	NA		10/18/00
0010155-05B		8260							X00398-010
X00398	XG.2000.1158-8	NA	1,2 Dichloroethane-D4 (SS)	94	% Recovery	100	NA		10/16/00
X00398	XG.2000.1159-1	NA	1,2 Dichloroethane-D4 (SS)	94	% Recovery	100	NA		10/16/00
X00398	XG.2000.1158-8	NA	4-Bromofluorobenzene (SS)	108	% Recovery	100	NA		10/16/00
X00398	XG.2000.1159-1	NA	4-Bromofluorobenzene (SS)	108	% Recovery	100	NA		10/16/00
X00398	XG.2000.1158-8	NA	Dibromofluoromethane (SS)	105	% Recovery	100	NA		10/16/00
X00398	XG.2000.1159-1	NA	Dibromofluoromethane (SS)	105	% Recovery	100	NA		10/16/00
X00398	XG.2000.1158-8	NA	Toluene-D8 (SS)	116	% Recovery	100	NA		10/16/00
X00398	XG.2000.1159-1	NA	Toluene-D8 (SS)	116	% Recovery	100	NA		10/16/00
0010155-05B		8260							X00398-023
X00398	XG.2000.1158-17	NA	1,2 Dichloroethane-D4 (SS)	102	% Recovery	1000	NA		10/17/00
X00398	XG.2000.1158-17	NA	4-Bromofluorobenzene (SS)	103	% Recovery	1000	NA		10/17/00
X00398	XG.2000.1158-17	NA	Dibromofluoromethane (SS)	105	% Recovery	1000	NA		10/17/00
X00398	XG.2000.1158-17	NA	Toluene-D8 (SS)	103	% Recovery	1000	NA		10/17/00

Client Sample ID: **SB-27-145'** Sample Matrix: **SOIL**

QC Group	Run Sequence	CAS #	Analyte	Result	Units	Dilution Factor	Detection Limit	Code	Run Date
0010155-06A		DRO							X00403-023
X00403	XG.2000.1150-5	NA	O-terphenyl	85	% Recovery	1	NA		10/16/00
0010155-06A		GRO							X00408-011
X00408	XG.2000.1155-6	NA	4-Bromofluorobenzene-FID	93	% Recovery	1	NA		10/16/00
X00408	XG.2000.1155-6	NA	4-Bromofluorobenzene-PID	114	% Recovery	1	NA		10/16/00
X00408	XG.2000.1155-6	NA	aaa-Trifluorotoluene-FID	97	% Recovery	1	NA		10/16/00
X00408	XG.2000.1155-6	NA	aaa-Trifluorotoluene-PID	ND	% Recovery	1	NA		10/16/00
0010155-06B		8270							X00406-004
X00406	XG.2000.1171-4	NA	*2,4,6-TRIBROMOPHENOL	86	% Recovery	1	NA		10/17/00
X00406	XG.2000.1171-4	NA	*2-FLUOROBIPHENYL	84	% Recovery	1	NA		10/17/00
X00406	XG.2000.1171-4	NA	*2-FLUOROPHENOL	79	% Recovery	1	NA		10/17/00
X00406	XG.2000.1171-4	NA	*NITROBENZENE-D5	82	% Recovery	1	NA		10/17/00
X00406	XG.2000.1171-4	NA	*PHENOL-D6	80	% Recovery	1	NA		10/17/00
X00406	XG.2000.1171-4	NA	*TERPHENYL-D14	90	% Recovery	1	NA		10/17/00

Client Sample ID: **SPIKE (SB-27-145')** Sample Matrix: **SOIL**

QC Group	Run Sequence	CAS #	Analyte	Result	Units	Dilution Factor	Detection Limit	Code	Run Date
0010155-07A		8270							X00406-005
X00406	XG.2000.1171-5	NA	*2,4,6-TRIBROMOPHENOL	90	% Recovery	1	NA		10/17/00
X00406	XG.2000.1171-5	NA	*2-FLUOROBIPHENYL	87	% Recovery	1	NA		10/17/00
X00406	XG.2000.1171-5	NA	*2-FLUOROPHENOL	78	% Recovery	1	NA		10/17/00
X00406	XG.2000.1171-5	NA	*NITROBENZENE-D5	82	% Recovery	1	NA		10/17/00
X00406	XG.2000.1171-5	NA	*PHENOL-D6	83	% Recovery	1	NA		10/17/00

Surrogate Summary: Fraction

Client: CH2MHILL

Project: 0010155 KAFB BULK FUEL FAC(ST106)

X00406	XG.2000.1171-5	NA	*TERPHENYL-D14	92	% Recovery	1	NA	10/17/00

Client Sample ID: **SPIKE DUP (SB-27-145')** Sample Matrix: **SOIL**

QC Group	Run Sequence	CAS #	Analyte	Result	Units	Dilution Factor	Detection Limit	Code	Run Date
0010155-08A		8270							X00406-006
X00406	XG.2000.1171-6	NA	*2,4,6-TRIBROMOPHENOL	90	% Recovery	1	NA		10/17/00
X00406	XG.2000.1171-6	NA	*2-FLUOROBIPHENYL	83	% Recovery	1	NA		10/17/00
X00406	XG.2000.1171-6	NA	*2-FLUOROPHENOL	76	% Recovery	1	NA		10/17/00
X00406	XG.2000.1171-6	NA	*NITROBENZENE-D5	78	% Recovery	1	NA		10/17/00
X00406	XG.2000.1171-6	NA	*PHENOL-D6	81	% Recovery	1	NA		10/17/00
X00406	XG.2000.1171-6	NA	*TERPHENYL-D14	93	% Recovery	1	NA		10/17/00

Client Sample ID: **SB-27-165'** Sample Matrix: **SOIL**

QC Group	Run Sequence	CAS #	Analyte	Result	Units	Dilution Factor	Detection Limit	Code	Run Date
0010155-09A		DRO							X00403-024
X00403	XG.2000.1150-6	NA	O-terphenyl	86	% Recovery	1	NA		10/16/
0010155-09A		GRO							X00408-012
X00408	XG.2000.1155-7	NA	4-Bromofluorobenzene-FID	92	% Recovery	1	NA		10/16/00
X00408	XG.2000.1155-7	NA	4-Bromofluorobenzene-PID	61	% Recovery	1	NA		10/16/00
X00408	XG.2000.1155-7	NA	aaa-Trifluorotoluene-FID	98	% Recovery	1	NA		10/16/00
X00408	XG.2000.1155-7	NA	aaa-Trifluorotoluene-PID	3	% Recovery	1	NA		10/16/00
0010155-09B		BTEXALL							X00392-021
X00392	XG.2000.1156-8	NA	4-Bromofluorobenzene	100	% Recovery	1	NA		10/17/00
X00392	XG.2000.1156-8	NA	aaa-Trifluorotoluene	102	% Recovery	1	NA		10/17/00
X00392	XG.2000.1156-8	NA	Bromochloromethane	51	% Recovery	1	NA		10/17/00
X00392	XG.2000.1156-8	NA	Bromochloropropane	47	% Recovery	1	NA		10/17/00
X00392	XG.2000.1156-8	NA	Dichlorobutane	74	% Recovery	1	NA		10/17/00

Client Sample ID: **SB-27-185'** Sample Matrix: **SOIL**

QC Group	Run Sequence	CAS #	Analyte	Result	Units	Dilution Factor	Detection Limit	Code	Run Date
0010155-10A		DRO							X00403-025
X00403	XG.2000.1150-7	NA	O-terphenyl	85	% Recovery	1	NA		10/16/00
0010155-10A		GRO							X00408-013
X00408	XG.2000.1155-8	NA	4-Bromofluorobenzene-FID	103	% Recovery	1	NA		10/16/00
X00408	XG.2000.1155-8	NA	4-Bromofluorobenzene-PID	67	% Recovery	1	NA		10/16/00
X00408	XG.2000.1155-8	NA	aaa-Trifluorotoluene-FID	103	% Recovery	1	NA		10/16/
X00408	XG.2000.1155-8	NA	aaa-Trifluorotoluene-PID	5	% Recovery	1	NA		10/1

Surrogate Summary: Fraction

Client: **CH2MHILL**

ct: **0010155** **KAFB BULK FUEL FAC(ST106)**

0010155-10B		**BTEXALL**							**X00392-022**
X00392	XG.2000.1156-9	NA	4-Bromofluorobenzene	101	% Recovery	1	NA		10/17/00
X00392	XG.2000.1156-9	NA	aaa-Trifluorotoluene	101	% Recovery	1	NA		10/17/00
X00392	XG.2000.1156-9	NA	Bromochloromethane	60	% Recovery	1	NA		10/17/00
X00392	XG.2000.1156-9	NA	Bromochloropropane	58	% Recovery	1	NA		10/17/00
X00392	XG.2000.1156-9	NA	Dichlorobutane	33	% Recovery	1	NA		10/17/00

Client Sample ID **SB-27-185'-DUP** Sample Matrix **SOIL**

QC Group	Run Sequence	CAS #	Analyte	Result	Units	Dilution Factor	Detection Limit	Code	Run Date
0010155-11A		**DRO**							**X00403-026**
X00403	XG.2000.1150-8	NA	O-terphenyl	88	% Recovery	1	NA		10/16/00
0010155-11A		**GRO**							**X00408-014**
X00408	XG.2000.1155-9	NA	4-Bromofluorobenzene-FID	98	% Recovery	1	NA		10/16/00
X00408	XG.2000.1155-9	NA	4-Bromofluorobenzene-PID	ND	% Recovery	1	NA		10/16/00
X00408	XG.2000.1155-9	NA	aaa-Trifluorotoluene-FID	97	% Recovery	1	NA		10/16/00
X00408	XG.2000.1155-9	NA	aaa-Trifluorotoluene-PID	ND	% Recovery	1	NA		10/16/00
0010155-11B		**BTEXALL**							**X00392-023**
X00392	XG.2000.1156-10	NA	4-Bromofluorobenzene	101	% Recovery	1	NA		10/17/00
[illegible]2	XG.2000.1156-10	NA	aaa-Trifluorotoluene	103	% Recovery	1	NA		10/17/00
[illegible]2	XG.2000.1156-10	NA	Bromochloromethane	39	% Recovery	1	NA		10/17/00
X00392	XG.2000.1156-10	NA	Bromochloropropane	23	% Recovery	1	NA		10/17/00
X00392	XG.2000.1156-10	NA	Dichlorobutane	29	% Recovery	1	NA		10/17/00

Client Sample ID **TRIP** Sample Matrix **WATER**

QC Group	Run Sequence	CAS #	Analyte	Result	Units	Dilution Factor	Detection Limit	Code	Run Date
0010155-13A		**8260**							**X00410-003**
X00410	XG.2000.1175-3	NA	1,2 Dichloroethane-D4 (SS)	102	% Recovery	1	NA		10/18/00
X00410	XG.2000.1175-3	NA	4-Bromofluorobenzene (SS)	105	% Recovery	1	NA		10/18/00
X00410	XG.2000.1175-3	NA	Dibromofluoromethane (SS)	104	% Recovery	1	NA		10/18/00
X00410	XG.2000.1175-3	NA	Toluene-D8 (SS)	101	% Recovery	1	NA		10/18/00

Chain of Custody Record

ANALYTICAL LABORATORIES, INC.

7300 JEFFERSON N.E.
ALBUQUERQUE, NEW MEXICO 87
(505) 345-8964

3332 WEDGEWOOD
EL PASO, TEXAS 79925
(915) 593-6000

127 EASTGATE DRIVE, 212-C
LOS ALAMOS, NEW MEXICO 87544
(505) 662-2558

Lab Job No.: 01015 Date 11/13

Page 1 of 1

Client: CH2M HILL

Address: 6001 INDIAN SCHOOL RD NE #350

City / State / Zip: ABQ NM 87110

Project Name / Number: KAFB Bulk Fuel Facility (ST106)

Contract / Purchase Order / Quote:

Project Manager / Contact: B. LeFevre / A. Halloran

Telephone No.: 884-5600

Fax No.: ~~884~~ 885 7507

Samplers: (signature): [signature]

Analysis Required

AAL Fraction Number	Field Sample Number / Location	Date	Time	Sample Type	Type / Size of Container	Preservation Temp.	Preservation Chemical	No. of Containers	GRO/DRO (8015)	VOC (8260)	BTEX	SVOC (8270)			Mass Spec			Remarks: PID Field Screening
	SB-27-95'	11/13	0745	Soil	4oz VOA	ICE	NO	1	X			X						216 ppm
	SB-27-105'	11/13	0850	Soil	4 oz VOA	ICE	NO	2	X		WA	NO			X			333 ppm
	SB-27-125'	11/13	1004	Soil	4 oz VOA	ICE	NO	3	X	X		X						254 ppm
	MS SPIKE (SB-27 125')	11/13	1004	Soil	4oz VOA + 8oz	ICE	NO	3	X	X		X						"
	SPIKE DUP (SB-27 125')	11/13	1004	Soil	4oz VOA + 8oz	ICE	NO	3	X	X		X						"
	SB-27-145	11/13	1130	Soil	4oz VOA + 8oz	ICE	NO	2	X			X						10 ppm
	SPIKE (SB-27 145')	11/13	1130	Soil	8oz	ICE	NO	1				X						"
	SPIKE DUP (SB-27 145')	11/13	1130	Soil	8oz	ICE	NO	1				X						"
	SB-27-165'	11/13	1250	Soil	4oz VOA	ICE	NO	2	X		X							25 ppm
	SB-27-185	11/13	1530	Soil	4oz VOA	ICE	NO	2	X		X							30 ppm
	SB-27-185' DUP	11/13	1530	Soil	4oz VOA	ICE	NO	2	X		X							"
	JP-8 NEAT	11/13	1615	Fuel	4oz VOA	NO ICE	NO HCL	1							X			

Relinquished by:	Date / Time	Received by:	Relinquished by:	Date / Time	Received by:
TRIP	11/13	NA 40ML VOA	[signature]	11/13	
Signature		Signature	Signature [signature]		Signature
Printed		Printed	Printed William J LeFevre		Printed
Company		Company	Company CH2M		Company
Reason		Reason	Reason		Reason

Method of Shipment:

Shipment No.

Special Instructions:

Comments: 13 Samples: 5 "hot" Soil, 6 BULCHN. 1 fuel (JP-8), 1 trip blank

called Bill - he is aware that the 2nd DUP not Oct. samples [illegible]

After analysis, samples are to be:

- ☐ Disposed of (additional fee)
- ☐ Stored (30 days max)
- ☐ Stored over 30 days (additional fee)
- ☐ Returned to customer

COURIER

ASSAIGAI
ANALYTICAL
LABORATORIES, INC.
7300 Jefferson, NE • Albuquerque, New Mexico 87109 • (505) 345-8964 • FAX (505) 345-7259
3332 Wedgewood Dr., Suite N • El Paso, Texas 79925 • (915) 593-6000 • FAX (915) 593-7820
127 Eastgate Drive, 212-C • Los Alamos, New Mexico 87544 • (505) 662-2558

Explanation of codes

B	*analyte detected in Method Blank*
E	*result is estimated*
H	*analyzed out of hold time*
N	*tentatively identified compound*
S	*subcontracted*
1-9	*see footnote*

CH2MHILL
attn: **AMY HALLORAN**
6001 INDIAN SCHOOL RD NE STE 350
ALBUQUERQUE, NM 87110-4140

Assaigai Analytical Laboratories, Inc.

Certificate of Analysis

Client: **CH2MHILL**
Project: **0010162 KAFB**

William P. Biava: President of Assaigai Analytical Laboratories, Inc.

Client Sample ID ***SB-27-205'*** Sample Matrix ***SOIL*** Sample Collected ***10/13/00 16:48:00***

QC Group	Run Sequence	CAS #	Analyte	Result	Units	Dilution Factor	Detection Limit	Code	Run Date
0010162-01A		**SW846 5030A/8015A GRO by GC/FID**							
X00408	XG.2000.1155-11		Gasoline Range Organics	0.64	mg / Kg	1	0.25		10/17/00
0010162-01A		**SW846 ME/8015A Diesel Range Organics by GC/FID**							
X00407	XG.2000.1150-20		Diesel Range Organics	58	mg / Kg	1	25		10/17/00
0010162-01B		**SW846 5030A/8021B Purgeable VOCs by GC/PID**							
X00392	XG.2000.1164-5	71-43-2	Benzene	ND	mg / Kg	1	0.005		10/18/00
X00392	XG.2000.1164-5	100-41-4	Ethylbenzene	ND	mg / Kg	1	0.005		10/18/00
X00392	XG.2000.1164-5	95-47-6	o-Xylene	ND	mg / Kg	1	0.005		10/18/00
X00392	XG.2000.1164-5	108-38-3/106-42	p/m-Xylenes	ND	mg / Kg	1	0.01		10/18/00
X00392	XG.2000.1164-5	108-88-3	Toluene	ND	mg / Kg	1	0.005		10/18/00

Client Sample ID ***SB-27-205' DUP*** Sample Matrix ***SOIL*** Sample Collected ***10/13/00 16:48:00***

QC Group	Run Sequence	CAS #	Analyte	Result	Units	Dilution Factor	Detection Limit	Code	Run Date
0010162-02A		**SW846 5030A/8015A GRO by GC/FID**							
X00408	XG.2000.1161-5		Gasoline Range Organics	5.8	mg / Kg	20	0.25		10/18/00

Member
American Council of
Independent Laboratories, Inc.

REPRODUCTION OF THIS REPORT IN LESS THAN FULL REQUIRES THE WRITTEN CONSENT OF AAL
THIS REPORT MAY NOT BE USED IN ANY MANNER BY THE CLIENT OR ANY OTHER THIRD PARTY TO CLAIM
PROOF OF ENDORSEMENT BY ANY ACCREDITATION PROGRAM

Certificate of Analysis

Client: CH2MHILL
Project: 0010162 KAFB

0010162-02A SW846 ME/8015A Diesel Range Organics by GC/FID

X00407	XG.2000.1150-21	Diesel Range Organics	46	mg / Kg	1	25	10/17/00

Client Sample ID ***SB-27-225'*** Sample Matrix ***SOIL*** Sample Collected ***10/13/00 18:05:00***

QC Group	Run Sequence	CAS #	Analyte	Result	Units	Dilution Factor	Detection Limit	Code	Run Date
0010162-03A		SW846 5030A/8015A GRO by GC/FID							
X00408	XG.2000.1161-6		Gasoline Range Organics	1.1	mg / Kg	1	0.25		10/18/00
0010162-03A		SW846 ME/8015A Diesel Range Organics by GC/FID							
X00407	XG.2000.1150-22		Diesel Range Organics	32	mg / Kg	1	25		10/17/00
0010162-03B		SW846 5030A/8021B Purgeable VOCs by GC/PID							
X00392	XG.2000.1164-6	71-43-2	Benzene	ND	mg / Kg	1	0.005		10/18/00
X00392	XG.2000.1164-6	100-41-4	Ethylbenzene	ND	mg / Kg	1	0.005		10/18/00
X00392	XG.2000.1164-6	95-47-6	o-Xylene	ND	mg / Kg	1	0.005		10/18/00
X00411	XG.2000.1177-2	108-38-3/106-42	p/m-Xylenes	ND	mg / Kg	10	0.01		10/23/00
X00392	XG.2000.1164-6	108-88-3	Toluene	ND	mg / Kg	1	0.005		10/18/00

Client Sample ID ***SB-27-245'*** Sample Matrix ***SOIL*** Sample Collected ***10/14/00 09:15:00***

QC Group	Run Sequence	CAS #	Analyte	Result	Units	Dilution Factor	Detection Limit	Code	Run Date
0010162-04A		SW846 5030A/8015A GRO by GC/FID							
X00408	XG.2000.1155-12		Gasoline Range Organics	0.41	mg / Kg	1	0.25		10/17/00
0010162-04A		SW846 ME/8015A Diesel Range Organics by GC/FID							
X00407	XG.2000.1150-23		Diesel Range Organics	ND	mg / Kg	1	25		10/17/00
0010162-04B		SW846 8260A Purgeable VOCs by GC/MS							
X00398	XG.2000.1158-13	75-34-3	1,1 Dichloroethane	ND	mg / Kg	10	0.005		10/17/00
X00398	XG.2000.1158-13	75-34-3	1,1 Dichloroethene	ND	mg / Kg	10	0.005		10/17/00
X00398	XG.2000.1158-13	71-55-6	1,1,1 Trichloroethane	ND	mg / Kg	10	0.005		10/17/00
X00398	XG.2000.1158-13	630-20-6	1,1,1,2 Tetrachloroethane	ND	mg / Kg	10	0.005		10/17/00
X00398	XG.2000.1158-13	79-00-5	1,1,2 Trichloroethane	ND	mg / Kg	10	0.005		10/17/00
X00398	XG.2000.1158-13	79-34-5	1,1,2,2 Tetrachloroethane	ND	mg / Kg	10	0.005		10/17/00
X00398	XG.2000.1158-13	106-93-4	1,2 Dibromoethane (EDB)	ND	mg / Kg	10	0.005		10/17/00
X00398	XG.2000.1158-13	95-50-1	1,2 Dichlorobenzene	ND	mg / Kg	10	0.005		10/17/00
X00398	XG.2000.1158-13	107-06-2	1,2 Dichloroethane	ND	mg / Kg	10	0.005		10/17/00
X00398	XG.2000.1158-13	78-87-5	1,2 Dichloropropane	ND	mg / Kg	10	0.005		10/17/00
X00398	XG.2000.1158-13	96-18-4	1,2,3 Trichloropropane	ND	mg / Kg	10	0.005		10/17/00
X00398	XG.2000.1158-13	95-63-6	1,2,4-Trimethylbenzene	ND	mg / Kg	10	0.005		10/17/00

Certificate of Analysis

t: **CH2MHILL**

Project: **0010162** **KAFB**

X00398	XG.2000.1158-13	541-73-1	1,3 Dichlorobenzene	ND	mg / Kg	10	0.005		10/17/00
X00398	XG.2000.1158-13	108-67-8	1,3,5-Trimethylbenzene	ND	mg / Kg	10	0.005		10/17/00
X00398	XG.2000.1158-13	764-41-0	1,4 Dichloro-2-butene	ND	mg / Kg	10	0.05		10/17/00
X00398	XG.2000.1158-13	106-46-7	1,4 Dichlorobenzene	ND	mg / Kg	10	0.005		10/17/00
X00398	XG.2000.1158-13	78-93-3	2-Butanone (MEK)	1.2	mg / Kg	10	0.025		10/17/00
X00398	XG.2000.1158-13	110-75-8	2-Chloroethylvinylether	ND	mg / Kg	10	0.025		10/17/00
X00398	XG.2000.1158-14	591-78-6	2-Hexanone (MBK)	0.046	mg / Kg	1	0.025	1	10/17/00
X00398	XG.2000.1158-14	108-10-1	4-Methyl-2-pentanone (MIBK)	0.030	mg / Kg	1	0.025	1	10/17/00
X00398	XG.2000.1158-13	67-64-1	Acetone	2.4	mg / Kg	10	0.05		10/17/00
X00398	XG.2000.1158-13	107-02-8	Acrolein	ND	mg / Kg	10	0.1		10/17/00
X00398	XG.2000.1158-13	107-13-1	Acrylonitrile	ND	mg / Kg	10	0.1		10/17/00
X00398	XG.2000.1158-13	71-43-2	Benzene	ND	mg / Kg	10	0.005		10/17/00
X00398	XG.2000.1158-13	75-27-4	Bromodichloromethane	ND	mg / Kg	10	0.005		10/17/00
X00398	XG.2000.1158-13	75-25-2	Bromoform	ND	mg / Kg	10	0.005		10/17/00
X00398	XG.2000.1158-13	74-83-9	Bromomethane	ND	mg / Kg	10	0.025		10/17/00
X00398	XG.2000.1158-13	75-15-0	Carbon disulfide	ND	mg / Kg	10	0.025		10/17/00
X00398	XG.2000.1158-13	56-23-5	Carbon tetrachloride	ND	mg / Kg	10	0.005		10/17/00
X00398	XG.2000.1158-13	108-90-7	Chlorobenzene	ND	mg / Kg	10	0.005		10/17/00
X00398	XG.2000.1158-13	124-48-1	Chlorodibromomethane	ND	mg / Kg	10	0.005		10/17/00
X00398	XG.2000.1158-13	75-00-3	Chloroethane	ND	mg / Kg	10	0.025		10/17/00
X00398	XG.2000.1158-13	67-66-3	Chloroform	ND	mg / Kg	10	0.005		10/17/00
X00398	XG.2000.1158-13	74-87-3	Chloromethane	ND	mg / Kg	10	0.025		10/17/00
[illegible]98	XG.2000.1158-13	156-59-2	cis-1,2 dichloroethene	ND	mg / Kg	10	0.005		10/17/00
[illegible]8	XG.2000.1158-13	10061-01-5	cis-1,3 dichloropropene	ND	mg / Kg	10	0.005		10/17/00
X00398	XG.2000.1158-13	74-95-3	Dibromomethane	ND	mg / Kg	10	0.005		10/17/00
X00398	XG.2000.1158-13	97-63-2	Ethyl methacrylate	ND	mg / Kg	10	0.025		10/17/00
X00398	XG.2000.1158-13	100-41-4	Ethylbenzene	ND	mg / Kg	10	0.005		10/17/00
X00398	XG.2000.1158-13		Freon 113	ND	mg / Kg	10	0.025		10/17/00
X00398	XG.2000.1158-13	75-71-8	Freon 12	ND	mg / Kg	10	0.05		10/17/00
X00398	XG.2000.1158-13	74-88-4	Iodomethane	ND	mg / Kg	10	0.025		10/17/00
X00398	XG.2000.1158-13	1634-04-4	Methyl t-butyl ether (MTBE)	ND	mg / Kg	10	0.005		10/17/00
X00398	XG.2000.1158-13	75-09-2	Methylene chloride	ND	mg / Kg	10	0.05		10/17/00
X00398	XG.2000.1158-13	91-20-3	Naphthalene	ND	mg / Kg	10	0.025		10/17/00
X00398	XG.2000.1158-13	95-47-6	o-Xylene	ND	mg / Kg	10	0.005		10/17/00
X00398	XG.2000.1158-13	108-38-3/106-42	p/m Xylenes	ND	mg / Kg	10	0.01		10/17/00
X00398	XG.2000.1158-13	100-42-5	Styrene	ND	mg / Kg	10	0.005		10/17/00
X00398	XG.2000.1158-13	156-60-5	t-1,2 Dichloroethene	ND	mg / Kg	10	0.005		10/17/00
X00398	XG.2000.1158-13	10061-02-6	t-1,3 Dichloropropene	ND	mg / Kg	10	0.005		10/17/00
X00398	XG.2000.1158-13	127-18-4	Tetrachloroethene	ND	mg / Kg	10	0.005		10/17/00
X00398	XG.2000.1158-13	108-88-3	Toluene	ND	mg / Kg	10	0.005		10/17/00
X00398	XG.2000.1158-13	79-01-6	Trichloroethene	ND	mg / Kg	10	0.005		10/17/00
X00398	XG.2000.1158-13	75-69-4	Trichlorofluoromethane	ND	mg / Kg	10	0.025		10/17/00
X00398	XG.2000.1158-13	108-05-4	Vinyl acetate	ND	mg / Kg	10	0.025		10/17/00
X00398	XG.2000.1158-13	75-01-4	Vinyl chloride	ND	mg / Kg	10	0.025		10/17/00

Certificate of Analysis

Client: CH2MHILL
Project: 0010162 KAFB

Client Sample ID *SB-27-245' DUP* | Sample Matrix *SOIL* | Sample Collected *10/14/00 09:15:00*

QC Group	Run Sequence	CAS #	Analyte	Result	Units	Dilution Factor	Detection Limit	Code	Run Date
0010162-05A		SW846 8260A Purgeable VOCs by GC/MS							
X00398	XG.2000.1158-9	75-34-3	1,1 Dichloroethane	ND	mg / Kg	100	0.005		10/17/00
X00398	XG.2000.1158-9	75-34-3	1,1 Dichloroethene	ND	mg / Kg	100	0.005		10/17/00
X00398	XG.2000.1158-9	71-55-6	1,1,1 Trichloroethane	ND	mg / Kg	100	0.005		10/17/00
X00398	XG.2000.1158-9	630-20-6	1,1,1,2 Tetrachloroethane	ND	mg / Kg	100	0.005		10/17/00
X00398	XG.2000.1158-9	79-00-5	1,1,2 Trichloroethane	ND	mg / Kg	100	0.005		10/17/00
X00398	XG.2000.1158-9	79-34-5	1,1,2,2 Tetrachloroethane	ND	mg / Kg	100	0.005		10/17/00
X00398	XG.2000.1158-9	106-93-4	1,2 Dibromoethane (EDB)	ND	mg / Kg	100	0.005		10/17/00
X00398	XG.2000.1158-9	95-50-1	1,2 Dichlorobenzene	ND	mg / Kg	100	0.005		10/17/00
X00398	XG.2000.1158-9	107-06-2	1,2 Dichloroethane	ND	mg / Kg	100	0.005		10/17/00
X00398	XG.2000.1158-9	78-87-5	1,2 Dichloropropane	ND	mg / Kg	100	0.005		10/17/00
X00398	XG.2000.1158-9	96-18-4	1,2,3 Trichloropropane	ND	mg / Kg	100	0.005		10/17/00
X00398	XG.2000.1158-9	95-63-6	1,2,4-Trimethylbenzene	ND	mg / Kg	100	0.005		10/17/00
X00398	XG.2000.1158-9	541-73-1	1,3 Dichlorobenzene	ND	mg / Kg	100	0.005		10/17/00
X00398	XG.2000.1158-9	108-67-8	1,3,5-Trimethylbenzene	ND	mg / Kg	100	0.005		10/17/00
X00398	XG.2000.1158-9	764-41-0	1,4 Dichloro-2-butene	ND	mg / Kg	100	0.05		10/17/00
X00398	XG.2000.1158-9	106-46-7	1,4 Dichlorobenzene	ND	mg / Kg	100	0.005		10/1[illegible]
X00398	XG.2000.1158-9	78-93-3	2-Butanone (MEK)	3.6	mg / Kg	100	0.025		10/17[illegible]
X00398	XG.2000.1158-9	110-75-8	2-Chloroethylvinylether	ND	mg / Kg	100	0.025		10/17/00
X00398	XG.2000.1158-20	591-78-6	2-Hexanone (MBK)	0.19	mg / Kg	1	0.025	1	10/17/00
X00398	XG.2000.1158-20	108-10-1	4-Methyl-2-pentanone (MIBK)	0.14	mg / Kg	1	0.025	1	10/17/00
X00398	XG.2000.1158-9	67-64-1	Acetone	8.6	mg / Kg	100	0.05		10/17/00
X00398	XG.2000.1158-9	107-02-8	Acrolein	ND	mg / Kg	100	0.1		10/17/00
X00398	XG.2000.1158-9	107-13-1	Acrylonitrile	ND	mg / Kg	100	0.1		10/17/00
X00398	XG.2000.1158-9	71-43-2	Benzene	ND	mg / Kg	100	0.005		10/17/00
X00398	XG.2000.1158-9	75-27-4	Bromodichloromethane	ND	mg / Kg	100	0.005		10/17/00
X00398	XG.2000.1158-9	75-25-2	Bromoform	ND	mg / Kg	100	0.005		10/17/00
X00398	XG.2000.1158-9	74-83-9	Bromomethane	ND	mg / Kg	100	0.025		10/17/00
X00398	XG.2000.1158-9	75-15-0	Carbon disulfide	ND	mg / Kg	100	0.025		10/17/00
X00398	XG.2000.1158-9	56-23-5	Carbon tetrachloride	ND	mg / Kg	100	0.005		10/17/00
X00398	XG.2000.1158-9	108-90-7	Chlorobenzene	ND	mg / Kg	100	0.005		10/17/00
X00398	XG.2000.1158-9	124-48-1	Chlorodibromomethane	ND	mg / Kg	100	0.005		10/17/00
X00398	XG.2000.1158-9	75-00-3	Chloroethane	ND	mg / Kg	100	0.025		10/17/00
X00398	XG.2000.1158-9	67-66-3	Chloroform	ND	mg / Kg	100	0.005		10/17/00
X00398	XG.2000.1158-9	74-87-3	Chloromethane	ND	mg / Kg	100	0.025		10/17/00
X00398	XG.2000.1158-9	156-59-2	cis-1,2 dichloroethene	ND	mg / Kg	100	0.005		10/17/00
X00398	XG.2000.1158-9	10061-01-5	cis-1,3 dichloropropene	ND	mg / Kg	100	0.005		10/17/00
X00398	XG.2000.1158-9	74-95-3	Dibromomethane	ND	mg / Kg	100	0.005		10/17/00
X00398	XG.2000.1158-9	97-63-2	Ethyl methacrylate	ND	mg / Kg	100	0.025		10/17/00
X00398	XG.2000.1158-9	100-41-4	Ethylbenzene	ND	mg / Kg	100	0.005		10/17/00
X00398	XG.2000.1158-9		Freon 113	ND	mg / Kg	100	0.025		10/17/00
X00398	XG.2000.1158-9	75-71-8	Freon 12	ND	mg / Kg	100	0.05		10/17/00
X00398	XG.2000.1158-9	74-88-4	Iodomethane	ND	mg / Kg	100	0.025		10/1[illegible]

Certificate of Analysis

t: CH2MHILL
Project: 0010162 KAFB

X00398	XG.2000.1158-9	1634-04-4	Methyl t-butyl ether (MTBE)	ND	mg / Kg	100	0.005		10/17/00
X00398	XG.2000.1158-9	75-09-2	Methylene chloride	ND	mg / Kg	100	0.05		10/17/00
X00398	XG.2000.1158-9	91-20-3	Naphthalene	ND	mg / Kg	100	0.025		10/17/00
X00398	XG.2000.1158-9	95-47-6	o-Xylene	ND	mg / Kg	100	0.005		10/17/00
X00398	XG.2000.1158-9	108-38-3/106-42	p/m Xylenes	ND	mg / Kg	100	0.01		10/17/00
X00398	XG.2000.1158-9	100-42-5	Styrene	ND	mg / Kg	100	0.005		10/17/00
X00398	XG.2000.1158-9	156-60-5	t-1,2 Dichloroethene	ND	mg / Kg	100	0.005		10/17/00
X00398	XG.2000.1158-9	10061-02-6	t-1,3 Dichloropropene	ND	mg / Kg	100	0.005		10/17/00
X00398	XG.2000.1158-9	127-18-4	Tetrachloroethene	ND	mg / Kg	100	0.005		10/17/00
X00398	XG.2000.1158-9	108-88-3	Toluene	ND	mg / Kg	100	0.005		10/17/00
X00398	XG.2000.1158-9	79-01-6	Trichloroethene	ND	mg / Kg	100	0.005		10/17/00
X00398	XG.2000.1158-9	75-69-4	Trichlorofluoromethane	ND	mg / Kg	100	0.025		10/17/00
X00398	XG.2000.1158-9	108-05-4	Vinyl acetate	ND	mg / Kg	100	0.025		10/17/00
X00398	XG.2000.1158-9	75-01-4	Vinyl chloride	ND	mg / Kg	100	0.025		10/17/00

Client Sample ID ***SB-27-265'*** Sample Matrix ***SOIL*** Sample Collected ***10/14/00 10:40:00***

QC Group	Run Sequence	CAS #	Analyte	Result	Units	Dilution Factor	Detection Limit	Code	Run Date
0010162-06A		**SW846 5030A/8015A GRO by GC/FID**							
[illegible]3	XG.2000.1155-13		Gasoline Range Organics	ND	mg / Kg	1	0.25		10/17/00
0010162-06A		**SW846 ME/8015A Diesel Range Organics by GC/FID**							
X00407	XG.2000.1150-15		Diesel Range Organics	ND	mg / Kg	1	25		10/17/00
0010162-06B		**SW846 8260A Purgeable VOCs by GC/MS**							
X00398	XG.2000.1205-2	75-34-3	1,1 Dichloroethane	ND	mg / Kg	1	0.005		10/17/00
X00398	XG.2000.1205-2	75-34-3	1,1 Dichloroethene	ND	mg / Kg	1	0.005		10/17/00
X00398	XG.2000.1205-2	71-55-6	1,1,1 Trichloroethane	ND	mg / Kg	1	0.005		10/17/00
X00398	XG.2000.1205-2	630-20-6	1,1,1,2 Tetrachloroethane	ND	mg / Kg	1	0.005		10/17/00
X00398	XG.2000.1205-2	79-00-5	1,1,2 Trichloroethane	ND	mg / Kg	1	0.005		10/17/00
X00398	XG.2000.1205-2	79-34-5	1,1,2,2 Tetrachloroethane	ND	mg / Kg	1	0.005		10/17/00
X00398	XG.2000.1205-2	106-93-4	1,2 Dibromoethane (EDB)	ND	mg / Kg	1	0.005		10/17/00
X00398	XG.2000.1205-2	95-50-1	1,2 Dichlorobenzene	ND	mg / Kg	1	0.005		10/17/00
X00398	XG.2000.1205-2	107-06-2	1,2 Dichloroethane	ND	mg / Kg	1	0.005		10/17/00
X00398	XG.2000.1205-2	78-87-5	1,2 Dichloropropane	ND	mg / Kg	1	0.005		10/17/00
X00398	XG.2000.1205-2	96-18-4	1,2,3 Trichloropropane	ND	mg / Kg	1	0.005		10/17/00
X00398	XG.2000.1205-2	95-63-6	1,2,4-Trimethylbenzene	ND	mg / Kg	1	0.005		10/17/00
X00398	XG.2000.1205-2	541-73-1	1,3 Dichlorobenzene	ND	mg / Kg	1	0.005		10/17/00
X00398	XG.2000.1205-2	108-67-8	1,3,5-Trimethylbenzene	ND	mg / Kg	1	0.005		10/17/00
X00398	XG.2000.1205-2	764-41-0	1,4 Dichloro-2-butene	ND	mg / Kg	1	0.05		10/17/00
X00398	XG.2000.1205-2	106-46-7	1,4 Dichlorobenzene	ND	mg / Kg	1	0.005		10/17/00
X00398	XG.2000.1205-2	78-93-3	2-Butanone (MEK)	ND	mg / Kg	1	0.025		10/17/00
X00398	XG.2000.1205-2	110-75-8	2-Chloroethylvinylether	ND	mg / Kg	1	0.025		10/17/00
X00398	XG.2000.1205-2	591-78-6	2-Hexanone (MBK)	ND	mg / Kg	1	0.025		10/17/00
[illegible]8	XG.2000.1205-2	108-10-1	4-Methyl-2-pentanone (MIBK)	ND	mg / Kg	1	0.025		10/17/00

Certificate of Analysis

Client: **CH2MHILL**

Project: **0010162** KAFB

X00398	XG.2000.1205-4	67-64-1	Acetone	0.13	mg / Kg	1	0.05	1	10/26/0
X00398	XG.2000.1205-2	107-02-8	Acrolein	ND	mg / Kg	1	0.1		10/17/0
X00398	XG.2000.1205-2	107-13-1	Acrylonitrile	ND	mg / Kg	1	0.1		10/17/0
X00398	XG.2000.1205-2	71-43-2	Benzene	ND	mg / Kg	1	0.005		10/17/0
X00398	XG.2000.1205-2	75-27-4	Bromodichloromethane	ND	mg / Kg	1	0.005		10/17/0
X00398	XG.2000.1205-2	75-25-2	Bromoform	ND	mg / Kg	1	0.005		10/17/0
X00398	XG.2000.1205-2	74-83-9	Bromomethane	ND	mg / Kg	1	0.025		10/17/0
X00398	XG.2000.1205-2	75-15-0	Carbon disulfide	ND	mg / Kg	1	0.025		10/17/0
X00398	XG.2000.1205-2	56-23-5	Carbon tetrachloride	ND	mg / Kg	1	0.005		10/17/0
X00398	XG.2000.1205-2	108-90-7	Chlorobenzene	ND	mg / Kg	1	0.005		10/17/0
X00398	XG.2000.1205-2	124-48-1	Chlorodibromomethane	ND	mg / Kg	1	0.005		10/17/0
X00398	XG.2000.1205-2	75-00-3	Chloroethane	ND	mg / Kg	1	0.025		10/17/0
X00398	XG.2000.1205-2	67-66-3	Chloroform	ND	mg / Kg	1	0.005		10/17/0
X00398	XG.2000.1205-2	74-87-3	Chloromethane	ND	mg / Kg	1	0.025		10/17/0
X00398	XG.2000.1205-2	156-59-2	cis-1,2 dichloroethene	ND	mg / Kg	1	0.005		10/17/0
X00398	XG.2000.1205-2	10061-01-5	cis-1,3 dichloropropene	ND	mg / Kg	1	0.005		10/17/0
X00398	XG.2000.1205-2	74-95-3	Dibromomethane	ND	mg / Kg	1	0.005		10/17/0
X00398	XG.2000.1205-2	97-63-2	Ethyl methacrylate	ND	mg / Kg	1	0.025		10/17/0
X00398	XG.2000.1205-2	100-41-4	Ethylbenzene	ND	mg / Kg	1	0.005		10/17/0
X00398	XG.2000.1205-2		Freon 113	ND	mg / Kg	1	0.025		10/17/0
X00398	XG.2000.1205-2	75-71-8	Freon 12	ND	mg / Kg	1	0.05		10/17/0
X00398	XG.2000.1205-2	74-88-4	Iodomethane	ND	mg / Kg	1	0.025		10/17/0
X00398	XG.2000.1205-2	1634-04-4	Methyl t-butyl ether (MTBE)	ND	mg / Kg	1	0.005		10/1
X00398	XG.2000.1205-2	75-09-2	Methylene chloride	ND	mg / Kg	1	0.05		10/17
X00398	XG.2000.1205-2	91-20-3	Naphthalene	ND	mg / Kg	1	0.025		10/17/0
X00398	XG.2000.1205-2	95-47-6	o-Xylene	ND	mg / Kg	1	0.005		10/17/00
X00398	XG.2000.1205-2	108-38-3/106-42	p/m Xylenes	ND	mg / Kg	1	0.01		10/17/00
X00398	XG.2000.1205-2	100-42-5	Styrene	ND	mg / Kg	1	0.005		10/17/00
X00398	XG.2000.1205-2	156-60-5	t-1,2 Dichloroethene	ND	mg / Kg	1	0.005		10/17/00
X00398	XG.2000.1205-2	10061-02-6	t-1,3 Dichloropropene	ND	mg / Kg	1	0.005		10/17/00
X00398	XG.2000.1205-2	127-18-4	Tetrachloroethene	ND	mg / Kg	1	0.005		10/17/00
X00398	XG.2000.1205-2	108-88-3	Toluene	ND	mg / Kg	1	0.005		10/17/00
X00398	XG.2000.1205-2	79-01-6	Trichloroethene	ND	mg / Kg	1	0.005		10/17/00
X00398	XG.2000.1205-2	75-69-4	Trichlorofluoromethane	ND	mg / Kg	1	0.025		10/17/00
X00398	XG.2000.1205-2	108-05-4	Vinyl acetate	ND	mg / Kg	1	0.025		10/17/00
X00398	XG.2000.1205-2	75-01-4	Vinyl chloride	ND	mg / Kg	1	0.025		10/17/00
0010162-06C		**SW846 3550A/8270B SVOCs by GC/MS**							
X00406	XG.2000.1171-9	120-82-1	1,2,4-Trichlorobenzene	ND	mg / Kg	1	0.03		10/17/00
X00406	XG.2000.1171-9	95-50-1	1,2-Dichlorobenzene	ND	mg / Kg	1	0.03		10/17/00
X00406	XG.2000.1171-9	541-73-1	1,3-Dichlorobenzene	ND	mg / Kg	1	0.03		10/17/00
X00406	XG.2000.1171-9	106-46-7	1,4-Dichlorobenzene	ND	mg / Kg	1	0.03		10/17/00
X00406	XG.2000.1171-9	90-12-0	1-Methylnaphthalene	ND	mg / Kg	1	0.03		10/17/00
X00406	XG.2000.1171-9	58-90-2	2,3,4,6-Tetrachlorophenol	ND	mg / Kg	1	1.5		10/17/00
X00406	XG.2000.1171-9	95-95-4	2,4,5-Trichlorophenol	ND	mg / Kg	1	0.3		10/17/00
X00406	XG.2000.1171-9	88-06-2	2,4,6-Trichlorophenol	ND	mg / Kg	1	0.3		10/17/00
X00406	XG.2000.1171-9	120-83-2	2,4-Dichlorophenol	ND	mg / Kg	1	0.3		10/17/00
X00406	XG.2000.1171-9	105-67-9	2,4-Dimethylphenol	ND	mg / Kg	1	0.03		10/17

Certificate of Analysis

t: CH2MHILL
Project: 0010162 KAFB

X00406	XG.2000.1171-9	51-28-5	2,4-Dinitrophenol	ND	mg / Kg	1	0.67	10/17/00
X00406	XG.2000.1171-9	121-14-2	2,4-Dinitrotoluene	ND	mg / Kg	1	0.3	10/17/00
X00406	XG.2000.1171-9	606-20-2	2,6-Dinitrotoluene	ND	mg / Kg	1	0.3	10/17/00
X00406	XG.2000.1171-9	91-58-7	2-Chloronaphthalene	ND	mg / Kg	1	0.03	10/17/00
X00406	XG.2000.1171-9	95-57-8	2-Chlorophenol	ND	mg / Kg	1	0.03	10/17/00
X00406	XG.2000.1171-9	91-57-6	2-Methylnaphthalene	ND	mg / Kg	1	0.03	10/17/00
X00406	XG.2000.1171-9	95-48-7	2-Methylphenol	ND	mg / Kg	1	0.03	10/17/00
X00406	XG.2000.1171-9	88-74-4	2-Nitroaniline	ND	mg / Kg	1	0.3	10/17/00
X00406	XG.2000.1171-9	88-75-5	2-Nitrophenol	ND	mg / Kg	1	0.3	10/17/00
X00406	XG.2000.1171-9		3+4 Methylphenol	ND	mg / Kg	1	0.03	10/17/00
X00406	XG.2000.1171-9	91-94-1	3,3-Dichlorobenzidine	ND	mg / Kg	1	0.3	10/17/00
X00406	XG.2000.1171-9	99-09-2	3-Nitroaniline	ND	mg / Kg	1	0.3	10/17/00
X00406	XG.2000.1171-9	534-52-1	4,6-Dinitro-2-methylphenol	ND	mg / Kg	1	0.3	10/17/00
X00406	XG.2000.1171-9	101-55-3	4-Bromophenyl-phenylether	ND	mg / Kg	1	0.03	10/17/00
X00406	XG.2000.1171-9	59-50-7	4-Chloro-3-methylphenol	ND	mg / Kg	1	0.3	10/17/00
X00406	XG.2000.1171-9	106-47-8	4-Chloroaniline	ND	mg / Kg	1	0.3	10/17/00
X00406	XG.2000.1171-9	7005-72-3	4-Chlorophenyl-phenylether	ND	mg / Kg	1	0.03	10/17/00
X00406	XG.2000.1171-9	100-01-6	4-Nitroaniline	ND	mg / Kg	1	0.3	10/17/00
X00406	XG.2000.1171-9	100-02-7	4-Nitrophenol	ND	mg / Kg	1	0.6	10/17/00
X00406	XG.2000.1171-9	83-32-9	Acenaphthene	ND	mg / Kg	1	0.03	10/17/00
X00406	XG.2000.1171-9	208-96-8	Acenaphthylene	ND	mg / Kg	1	0.03	10/17/00
X00406	XG.2000.1171-9	62-53-3	Aniline	ND	mg / Kg	1	0.3	10/17/00
[illegible]	XG.2000.1171-9	120-12-7	Anthracene	ND	mg / Kg	1	0.03	10/17/00
[illegible]	XG.2000.1171-9		Azobenzene&1,2-Diphenylhydrazine	ND	mg / Kg	1	0.03	10/17/00
X00406	XG.2000.1171-9	56-55-3	Benzo (a) anthracene	ND	mg / Kg	1	0.03	10/17/00
X00406	XG.2000.1171-9	50-32-8	Benzo(a)pyrene	ND	mg / Kg	1	0.03	10/17/00
X00406	XG.2000.1171-9		Benzo(b & k)fluoranthene	ND	mg / Kg	1	0.03	10/17/00
X00406	XG.2000.1171-9	191-24-2	Benzo(g,h,i)perylene	ND	mg / Kg	1	0.3	10/17/00
X00406	XG.2000.1171-9	64-85-0	Benzoic acid	ND	mg / Kg	1	3	10/17/00
X00406	XG.2000.1171-9	100-51-6	Benzyl alcohol	ND	mg / Kg	1	1.5	10/17/00
X00406	XG.2000.1171-9	111-44-4	bis (2-Chloroethyl) ether	ND	mg / Kg	1	0.03	10/17/00
X00406	XG.2000.1171-9	111-91-1	bis(2-Chloroethoxy)methane	ND	mg / Kg	1	0.03	10/17/00
X00406	XG.2000.1171-9	108-60-1	bis(2-Chloroisopropyl)ether	ND	mg / Kg	1	0.03	10/17/00
X00406	XG.2000.1171-9	117-81-7	bis(2-Ethylhexyl)phthalate	ND	mg / Kg	1	0.3	10/17/00
X00406	XG.2000.1171-9	85-68-7	Butylbenzylphthalate	ND	mg / Kg	1	0.03	10/17/00
X00406	XG.2000.1171-9	218-01-9	Chrysene	ND	mg / Kg	1	0.03	10/17/00
X00406	XG.2000.1171-9	84-74-2	di-n-Butylphthalate	ND	mg / Kg	1	0.3	10/17/00
X00406	XG.2000.1171-9	117-84-0	di-n-Octylpthalate	ND	mg / Kg	1	0.3	10/17/00
X00406	XG.2000.1171-9	53-70-3	Dibenz(a,h)anthracene	ND	mg / Kg	1	0.3	10/17/00
X00406	XG.2000.1171-9	132-64-9	Dibenzofuran	ND	mg / Kg	1	0.03	10/17/00
X00406	XG.2000.1171-9	84-66-2	Diethylphthalate	ND	mg / Kg	1	0.03	10/17/00
X00406	XG.2000.1171-9	131-11-3	Dimethylphthalate	ND	mg / Kg	1	0.03	10/17/00
X00406	XG.2000.1171-9	206-44-0	Fluoranthene	ND	mg / Kg	1	0.03	10/17/00
X00406	XG.2000.1171-9	86737	Fluorene	ND	mg / Kg	1	0.03	10/17/00
X00406	XG.2000.1171-9	118-74-1	Hexachlorobenzene	ND	mg / Kg	1	0.03	10/17/00
X00406	XG.2000.1171-9	87-68-3	Hexachlorobutadiene	ND	mg / Kg	1	0.03	10/17/00
X00406	XG.2000.1171-9	77-47-4	Hexachlorocyclopentadiene	ND	mg / Kg	1	1.5	10/17/00
[illegible]	XG.2000.1171-9	67-72-1	Hexachloroethane	ND	mg / Kg	1	0.03	10/17/00

Certificate of Analysis

Client: **CH2MHILL**

Project: **0010162** **KAFB**

X00406	XG.2000.1171-9	193-39-5	Indeno(1,2,3-cd)pyrene	ND	mg / Kg	1	0.3	10/17/00
X00406	XG.2000.1171-9	78-59-1	Isophorone	ND	mg / Kg	1	0.03	10/17/00
X00406	XG.2000.1171-9	621-64-7	n-Nitroso-di-n-propylamine	ND	mg / Kg	1	0.03	10/17/00
X00406	XG.2000.1171-9	62-75-9	n-Nitroso-dimethyl-amine	ND	mg / Kg	1	0.3	10/17/00
X00406	XG.2000.1171-9	86-30-6	n-Nitrosodiphenylamine	ND	mg / Kg	1	0.03	10/17/00
X00406	XG.2000.1171-9	91-20-3	Naphthalene	ND	mg / Kg	1	0.03	10/17/00
X00406	XG.2000.1171-9	98-95-3	Nitrobenzene	ND	mg / Kg	1	0.03	10/17/00
X00406	XG.2000.1171-9	87-86-5	Pentachlorophenol	ND	mg / Kg	1	0.3	10/17/00
X00406	XG.2000.1171-9	85-01-8	Phenanthrene	ND	mg / Kg	1	0.03	10/17/00
X00406	XG.2000.1171-9	108-95-2	Phenol	ND	mg / Kg	1	0.3	10/17/00
X00406	XG.2000.1171-9	129-00-0	Pyrene	ND	mg / Kg	1	0.03	10/17/00
X00406	XG.2000.1171-9	110-86-1	Pyridine	ND	mg / Kg	1	0.3	10/17/00

Client Sample ID ***SB-27-265' DUP*** Sample Matrix ***SOIL*** Sample Collected ***10/14/00 10:40:00***

QC Group	Run Sequence	CAS #	Analyte	Result	Units	Dilution Factor	Detection Limit	Code	Run Date
0010162-07A		**SW846 3550A/8270B SVOCs by GC/MS**							
X00406	XG.2000.1171-7	120-82-1	1,2,4-Trichlorobenzene	ND	mg / Kg	1	0.03		10/17/00
X00406	XG.2000.1171-7	95-50-1	1,2-Dichlorobenzene	ND	mg / Kg	1	0.03		10/17/00
X00406	XG.2000.1171-7	541-73-1	1,3-Dichlorobenzene	ND	mg / Kg	1	0.03		10/1[illegible]
X00406	XG.2000.1171-7	106-46-7	1,4-Dichlorobenzene	ND	mg / Kg	1	0.03		10/17[illegible]
X00406	XG.2000.1171-7	90-12-0	1-Methylnaphthalene	ND	mg / Kg	1	0.03		10/17/00
X00406	XG.2000.1171-7	58-90-2	2,3,4,6-Tetrachlorophenol	ND	mg / Kg	1	1.5		10/17/00
X00406	XG.2000.1171-7	95-95-4	2,4,5-Trichlorophenol	ND	mg / Kg	1	0.3		10/17/00
X00406	XG.2000.1171-7	88-06-2	2,4,6-Trichlorophenol	ND	mg / Kg	1	0.3		10/17/00
X00406	XG.2000.1171-7	120-83-2	2,4-Dichlorophenol	ND	mg / Kg	1	0.3		10/17/00
X00406	XG.2000.1171-7	105-67-9	2,4-Dimethylphenol	ND	mg / Kg	1	0.03		10/17/00
X00406	XG.2000.1171-7	51-28-5	2,4-Dinitrophenol	ND	mg / Kg	1	0.67		10/17/00
X00406	XG.2000.1171-7	121-14-2	2,4-Dinitrotoluene	ND	mg / Kg	1	0.3		10/17/00
X00406	XG.2000.1171-7	606-20-2	2,6-Dinitrotoluene	ND	mg / Kg	1	0.3		10/17/00
X00406	XG.2000.1171-7	91-58-7	2-Chloronaphthalene	ND	mg / Kg	1	0.03		10/17/00
X00406	XG.2000.1171-7	95-57-8	2-Chlorophenol	ND	mg / Kg	1	0.03		10/17/00
X00406	XG.2000.1171-7	91-57-6	2-Methylnaphthalene	ND	mg / Kg	1	0.03		10/17/00
X00406	XG.2000.1171-7	95-48-7	2-Methylphenol	ND	mg / Kg	1	0.03		10/17/00
X00406	XG.2000.1171-7	88-74-4	2-Nitroaniline	ND	mg / Kg	1	0.3		10/17/00
X00406	XG.2000.1171-7	88-75-5	2-Nitrophenol	ND	mg / Kg	1	0.3		10/17/00
X00406	XG.2000.1171-7		3+4 Methylphenol	ND	mg / Kg	1	0.03		10/17/00
X00406	XG.2000.1171-7	91-94-1	3,3-Dichlorobenzidine	ND	mg / Kg	1	0.3		10/17/00
X00406	XG.2000.1171-7	99-09-2	3-Nitroaniline	ND	mg / Kg	1	0.3		10/17/00
X00406	XG.2000.1171-7	534-52-1	4,6-Dinitro-2-methylphenol	ND	mg / Kg	1	0.3		10/17/00
X00406	XG.2000.1171-7	101-55-3	4-Bromophenyl-phenylether	ND	mg / Kg	1	0.03		10/17/00
X00406	XG.2000.1171-7	59-50-7	4-Chloro-3-methylphenol	ND	mg / Kg	1	0.3		10/17/00
X00406	XG.2000.1171-7	106-47-8	4-Chloroaniline	ND	mg / Kg	1	0.3		10/17/00
X00406	XG.2000.1171-7	7005-72-3	4-Chlorophenyl-phenylether	ND	mg / Kg	1	0.03		10/17/00
X00406	XG.2000.1171-7	100-01-6	4-Nitroaniline	ND	mg / Kg	1	0.3		10/17/00
X00406	XG.2000.1171-7	100-02-7	4-Nitrophenol	ND	mg / Kg	1	0.6		10/1[illegible]

Certificate of Analysis

ıt: CH2MHILL

Project: 0010162 KAFB

X00406	XG.2000.1171-7	83-32-9	Acenaphthene	ND	mg / Kg	1	0.03	10/17/00
X00406	XG.2000.1171-7	208-96-8	Acenaphthylene	ND	mg / Kg	1	0.03	10/17/00
X00406	XG.2000.1171-7	62-53-3	Aniline	ND	mg / Kg	1	0.3	10/17/00
X00406	XG.2000.1171-7	120-12-7	Anthracene	ND	mg / Kg	1	0.03	10/17/00
X00406	XG.2000.1171-7		Azobenzene&1,2-Diphenylhydrazine	ND	mg / Kg	1	0.03	10/17/00
X00406	XG.2000.1171-7	56-55-3	Benzo (a) anthracene	ND	mg / Kg	1	0.03	10/17/00
X00406	XG.2000.1171-7	50-32-8	Benzo(a)pyrene	ND	mg / Kg	1	0.03	10/17/00
X00406	XG.2000.1171-7		Benzo(b & k)fluoranthene	ND	mg / Kg	1	0.03	10/17/00
X00406	XG.2000.1171-7	191-24-2	Benzo(g,h,i)perylene	ND	mg / Kg	1	0.3	10/17/00
X00406	XG.2000.1171-7	64-85-0	Benzoic acid	ND	mg / Kg	1	3	10/17/00
X00406	XG.2000.1171-7	100-51-6	Benzyl alcohol	ND	mg / Kg	1	1.5	10/17/00
X00406	XG.2000.1171-7	111-44-4	bis (2-Chloroethyl) ether	ND	mg / Kg	1	0.03	10/17/00
X00406	XG.2000.1171-7	111-91-1	bis(2-Chloroethoxy)methane	ND	mg / Kg	1	0.03	10/17/00
X00406	XG.2000.1171-7	108-60-1	bis(2-Chloroisopropyl)ether	ND	mg / Kg	1	0.03	10/17/00
X00406	XG.2000.1171-7	117-81-7	bis(2-Ethylhexyl)phthalate	ND	mg / Kg	1	0.3	10/17/00
X00406	XG.2000.1171-7	85-68-7	Butylbenzylphthalate	ND	mg / Kg	1	0.03	10/17/00
X00406	XG.2000.1171-7	218-01-9	Chrysene	ND	mg / Kg	1	0.03	10/17/00
X00406	XG.2000.1171-7	84-74-2	di-n-Butylphthalate	ND	mg / Kg	1	0.3	10/17/00
X00406	XG.2000.1171-7	117-84-0	di-n-Octylpthalate	ND	mg / Kg	1	0.3	10/17/00
X00406	XG.2000.1171-7	53-70-3	Dibenz(a,h)anthracene	ND	mg / Kg	1	0.3	10/17/00
X00406	XG.2000.1171-7	132-64-9	Dibenzofuran	ND	mg / Kg	1	0.03	10/17/00
X00406	XG.2000.1171-7	84-66-2	Diethylphthalate	ND	mg / Kg	1	0.03	10/17/00
X00406	XG.2000.1171-7	131-11-3	Dimethylphthalate	ND	mg / Kg	1	0.03	10/17/00
X00406	XG.2000.1171-7	206-44-0	Fluoranthene	ND	mg / Kg	1	0.03	10/17/00
X00406	XG.2000.1171-7	86737	Fluorene	ND	mg / Kg	1	0.03	10/17/00
X00406	XG.2000.1171-7	118-74-1	Hexachlorobenzene	ND	mg / Kg	1	0.03	10/17/00
X00406	XG.2000.1171-7	87-68-3	Hexachlorobutadiene	ND	mg / Kg	1	0.03	10/17/00
X00406	XG.2000.1171-7	77-47-4	Hexachlorocyclopentadiene	ND	mg / Kg	1	1.5	10/17/00
X00406	XG.2000.1171-7	67-72-1	Hexachloroethane	ND	mg / Kg	1	0.03	10/17/00
X00406	XG.2000.1171-7	193-39-5	Indeno(1,2,3-cd)pyrene	ND	mg / Kg	1	0.3	10/17/00
X00406	XG.2000.1171-7	78-59-1	Isophorone	ND	mg / Kg	1	0.03	10/17/00
X00406	XG.2000.1171-7	621-64-7	n-Nitroso-di-n-propylamine	ND	mg / Kg	1	0.03	10/17/00
X00406	XG.2000.1171-7	62-75-9	n-Nitroso-dimethyl-amine	ND	mg / Kg	1	0.3	10/17/00
X00406	XG.2000.1171-7	86-30-6	n-Nitrosodiphenylamine	ND	mg / Kg	1	0.03	10/17/00
X00406	XG.2000.1171-7	91-20-3	Naphthalene	ND	mg / Kg	1	0.03	10/17/00
X00406	XG.2000.1171-7	98-95-3	Nitrobenzene	ND	mg / Kg	1	0.03	10/17/00
X00406	XG.2000.1171-7	87-86-5	Pentachlorophenol	ND	mg / Kg	1	0.3	10/17/00
X00406	XG.2000.1171-7	85-01-8	Phenanthrene	ND	mg / Kg	1	0.03	10/17/00
X00406	XG.2000.1171-7	108-95-2	Phenol	ND	mg / Kg	1	0.3	10/17/00
X00406	XG.2000.1171-7	129-00-0	Pyrene	ND	mg / Kg	1	0.03	10/17/00
X00406	XG.2000.1171-7	110-86-1	Pyridine	ND	mg / Kg	1	0.3	10/17/00

Certificate of Analysis

Client: CH2MHILL
Project: 0010162 KAFB

Client Sample ID: *EQUIP RINSE 2* | Sample Matrix: *H2O* | Sample Collected: *10/14/00 11:50:00*

QC Group	Run Sequence	CAS #	Analyte	Result	Units	Dilution Factor	Detection Limit	Code	Run Date
0010162-08A		**SW846 5030A/8015A GRO by GC/FID**							
X00405	XG.2000.1161-10		Gasoline Range Organics	ND	mg / L	1	0.05		10/19/00
0010162-08A		**SW846 ME/8015A Diesel Range Organics by GC/FID**							
X00404	XG.2000.1150-25		Diesel Range Organics	ND	mg / L	1	25		10/17/00
0010162-08B		**SW846 8260A Purgeable VOCs by GC/MS**							
X00410	XG.2000.1175-5	75-34-3	1,1 Dichloroethane	ND	ug / L	1	1		10/18/00
X00410	XG.2000.1175-5	75-34-3	1,1 Dichloroethene	ND	ug / L	1	1		10/18/00
X00410	XG.2000.1175-5	71-55-6	1,1,1 Trichloroethane	ND	ug / L	1	1		10/18/00
X00410	XG.2000.1175-5	630-20-6	1,1,1,2 Tetrachloroethane	ND	ug / L	1	1		10/18/00
X00410	XG.2000.1175-5	79-00-5	1,1,2 Trichloroethane	ND	ug / L	1	1		10/18/00
X00410	XG.2000.1175-5	79-34-5	1,1,2,2 Tetrachloroethane	ND	ug / L	1	1		10/18/00
X00410	XG.2000.1175-5	106-93-4	1,2 Dibromoethane (EDB)	ND	ug / L	1	1		10/18/00
X00410	XG.2000.1175-5	95-50-1	1,2 Dichlorobenzene	ND	ug / L	1	1		10/18/00
X00410	XG.2000.1175-5	107-06-2	1,2 Dichloroethane	ND	ug / L	1	1		10/18/00
X00410	XG.2000.1175-5	78-87-5	1,2 Dichloropropane	ND	ug / L	1	1		10/18/[illegible]
X00410	XG.2000.1175-5	96-18-4	1,2,3 Trichloropropane	ND	ug / L	1	1		10/18/[illegible]
X00410	XG.2000.1175-5	95-63-6	1,2,4-Trimethylbenzene	ND	ug / L	1	1		10/18/00
X00410	XG.2000.1175-5	541-73-1	1,3 Dichlorobenzene	ND	ug / L	1	1		10/18/00
X00410	XG.2000.1175-5	108-67-8	1,3,5-Trimethylbenzene	ND	ug / L	1	1		10/18/00
X00410	XG.2000.1175-5	764-41-0	1,4 Dichloro-2-butene	ND	ug / L	1	10		10/18/00
X00410	XG.2000.1175-5	106-46-7	1,4 Dichlorobenzene	ND	ug / L	1	1		10/18/00
X00410	XG.2000.1175-5	78-93-3	2-Butanone (MEK)	ND	ug / L	1	5		10/18/00
X00410	XG.2000.1175-5	110-75-8	2-Chloroethylvinylether	ND	ug / L	1	5		10/18/00
X00410	XG.2000.1175-5	591-78-6	2-Hexanone (MBK)	ND	ug / L	1	5		10/18/00
X00410	XG.2000.1175-5	108-10-1	4-Methyl-2-pentanone (MIBK)	ND	ug / L	1	5		10/18/00
X00410	XG.2000.1175-5	67-64-1	Acetone	15	ug / L	1	10		10/18/00
X00410	XG.2000.1175-5	107-02-8	Acrolein	ND	ug / L	1	20		10/18/00
X00410	XG.2000.1175-5	107-13-1	Acrylonitrile	ND	ug / L	1	20		10/18/00
X00410	XG.2000.1175-5	71-43-2	Benzene	ND	ug / L	1	1		10/18/00
X00410	XG.2000.1175-5	75-27-4	Bromodichloromethane	ND	ug / L	1	1		10/18/00
X00410	XG.2000.1175-5	75-25-2	Bromoform	ND	ug / L	1	1		10/18/00
X00410	XG.2000.1175-5	74-83-9	Bromomethane	ND	ug / L	1	5		10/18/00
X00410	XG.2000.1175-5	75-15-0	Carbon disulfide	ND	ug / L	1	5		10/18/00
X00410	XG.2000.1175-5	56-23-5	Carbon tetrachloride	ND	ug / L	1	1		10/18/00
X00410	XG.2000.1175-5	108-90-7	Chlorobenzene	ND	ug / L	1	1		10/18/00
X00410	XG.2000.1175-5	124-48-1	Chlorodibromomethane	ND	ug / L	1	1		10/18/00
X00410	XG.2000.1175-5	75-00-3	Chloroethane	ND	ug / L	1	5		10/18/00
X00410	XG.2000.1175-5	67-66-3	Chloroform	ND	ug / L	1	1		10/18/00
X00410	XG.2000.1175-5	74-87-3	Chloromethane	ND	ug / L	1	5		10/18/00
X00410	XG.2000.1175-5	156-59-2	cis-1,2 dichloroethene	ND	ug / L	1	1		10/18/00
X00410	XG.2000.1175-5	10061-01-5	cis-1,3 dichloropropene	ND	ug / L	1	1		10/18/[illegible]

Certificate of Analysis

Client: CH2MHILL
Project: 0010162 KAFB

X00410	XG.2000.1175-5	74-95-3	Dibromomethane	ND	ug / L	1	1	10/18/00
X00410	XG.2000.1175-5	97-63-2	Ethyl methacrylate	ND	ug / L	1	5	10/18/00
X00410	XG.2000.1175-5	100-41-4	Ethylbenzene	ND	ug / L	1	1	10/18/00
X00410	XG.2000.1175-5		Freon 113	ND	ug / L	1	5	10/18/00
X00410	XG.2000.1175-5	75-71-8	Freon 12	ND	ug / L	1	10	10/18/00
X00410	XG.2000.1175-5	74-88-4	Iodomethane	ND	ug / L	1	5	10/18/00
X00410	XG.2000.1175-5	1634-04-4	Methyl t-butyl ether (MTBE)	ND	ug / L	1	1	10/18/00
X00410	XG.2000.1175-5	75-09-2	Methylene chloride	ND	ug / L	1	10	10/18/00
X00410	XG.2000.1175-5	91-20-3	Naphthalene	ND	ug / L	1	5	10/18/00
X00410	XG.2000.1175-5	95-47-6	o-Xylene	ND	ug / L	1	1	10/18/00
X00410	XG.2000.1175-5	108-38-3/106-42	p/m Xylenes	ND	ug / L	1	2	10/18/00
X00410	XG.2000.1175-5	100-42-5	Styrene	ND	ug / L	1	1	10/18/00
X00410	XG.2000.1175-5	156-60-5	t-1,2 Dichloroethene	ND	ug / L	1	1	10/18/00
X00410	XG.2000.1175-5	10061-02-6	t-1,3 Dichloropropene	ND	ug / L	1	1	10/18/00
X00410	XG.2000.1175-5	127-18-4	Tetrachloroethene	ND	ug / L	1	1	10/18/00
X00410	XG.2000.1175-5	108-88-3	Toluene	ND	ug / L	1	1	10/18/00
X00410	XG.2000.1175-5	79-01-6	Trichloroethene	ND	ug / L	1	1	10/18/00
X00410	XG.2000.1175-5	75-69-4	Trichlorofluoromethane	ND	ug / L	1	5	10/18/00
X00410	XG.2000.1175-5	108-05-4	Vinyl acetate	ND	ug / L	1	5	10/18/00
X00410	XG.2000.1175-5	75-01-4	Vinyl chloride	ND	ug / L	1	5	10/18/00

Client Sample ID ***SB-27-285'*** Sample Matrix ***SOIL*** Sample Collected ***10/14/00 12:50:00***

QC Group	Run Sequence	CAS #	Analyte	Result	Units	Dilution Factor	Detection Limit	Code	Run Date
0010162-09A		**SW846 5030A/8015A GRO by GC/FID**							
X00408	XG.2000.1155-14		Gasoline Range Organics	ND	mg / Kg	1	0.25		10/17/00
0010162-09A		**SW846 ME/8015A Diesel Range Organics by GC/FID**							
X00407	XG.2000.1150-16		Diesel Range Organics	ND	mg / Kg	1	25		10/17/00
0010162-09B		**SW846 8260A Purgeable VOCs by GC/MS**							
X00398	XG.2000.1158-15	75-34-3	1,1 Dichloroethane	ND	mg / Kg	1	0.005	1	10/17/00
X00398	XG.2000.1158-15	75-34-3	1,1 Dichloroethene	ND	mg / Kg	1	0.005	1	10/17/00
X00398	XG.2000.1158-15	71-55-6	1,1,1 Trichloroethane	ND	mg / Kg	1	0.005	1	10/17/00
X00398	XG.2000.1158-15	630-20-6	1,1,1,2 Tetrachloroethane	ND	mg / Kg	1	0.005	1	10/17/00
X00398	XG.2000.1158-15	79-00-5	1,1,2 Trichloroethane	ND	mg / Kg	1	0.005	1	10/17/00
X00398	XG.2000.1158-15	79-34-5	1,1,2,2 Tetrachloroethane	ND	mg / Kg	1	0.005	1	10/17/00
X00398	XG.2000.1158-15	106-93-4	1,2 Dibromoethane (EDB)	ND	mg / Kg	1	0.005	1	10/17/00
X00398	XG.2000.1158-15	95-50-1	1,2 Dichlorobenzene	ND	mg / Kg	1	0.005	1	10/17/00
X00398	XG.2000.1158-15	107-06-2	1,2 Dichloroethane	ND	mg / Kg	1	0.005	1	10/17/00
X00398	XG.2000.1158-15	78-87-5	1,2 Dichloropropane	ND	mg / Kg	1	0.005	1	10/17/00
X00398	XG.2000.1158-15	96-18-4	1,2,3 Trichloropropane	ND	mg / Kg	1	0.005	1	10/17/00
X00398	XG.2000.1158-15	95-63-6	1,2,4-Trimethylbenzene	ND	mg / Kg	1	0.005	1	10/17/00
X00398	XG.2000.1158-15	541-73-1	1,3 Dichlorobenzene	ND	mg / Kg	1	0.005	1	10/17/00
[illegible]98	XG.2000.1158-15	108-67-8	1,3,5-Trimethylbenzene	ND	mg / Kg	1	0.005	1	10/17/00

Certificate of Analysis

Client: **CH2MHILL**

Project: **0010162 KAFB**

X00398	XG.2000.1158-15	764-41-0	1,4 Dichloro-2-butene	ND	mg / Kg	1	0.05	1	10/17/00
X00398	XG.2000.1158-15	106-46-7	1,4 Dichlorobenzene	ND	mg / Kg	1	0.005	1	10/17/00
X00398	XG.2000.1158-15	78-93-3	2-Butanone (MEK)	ND	mg / Kg	1	0.025	1	10/17/00
X00398	XG.2000.1158-15	110-75-8	2-Chloroethylvinylether	ND	mg / Kg	1	0.025	1	10/17/00
X00398	XG.2000.1158-15	591-78-6	2-Hexanone (MBK)	ND	mg / Kg	1	0.025	1	10/17/00
X00398	XG.2000.1158-15	108-10-1	4-Methyl-2-pentanone (MIBK)	ND	mg / Kg	1	0.025	1	10/17/00
X00398	XG.2000.1158-15	67-64-1	Acetone	ND	mg / Kg	1	0.05	1	10/17/00
X00398	XG.2000.1158-15	107-02-8	Acrolein	ND	mg / Kg	1	0.1	1	10/17/00
X00398	XG.2000.1158-15	107-13-1	Acrylonitrile	ND	mg / Kg	1	0.1	1	10/17/00
X00398	XG.2000.1158-15	71-43-2	Benzene	ND	mg / Kg	1	0.005	1	10/17/00
X00398	XG.2000.1158-15	75-27-4	Bromodichloromethane	ND	mg / Kg	1	0.005	1	10/17/00
X00398	XG.2000.1158-15	75-25-2	Bromoform	ND	mg / Kg	1	0.005	1	10/17/00
X00398	XG.2000.1158-15	74-83-9	Bromomethane	ND	mg / Kg	1	0.025	1	10/17/00
X00398	XG.2000.1158-15	75-15-0	Carbon disulfide	ND	mg / Kg	1	0.025	1	10/17/00
X00398	XG.2000.1158-15	56-23-5	Carbon tetrachloride	ND	mg / Kg	1	0.005	1	10/17/00
X00398	XG.2000.1158-15	108-90-7	Chlorobenzene	ND	mg / Kg	1	0.005	1	10/17/00
X00398	XG.2000.1158-15	124-48-1	Chlorodibromomethane	ND	mg / Kg	1	0.005	1	10/17/00
X00398	XG.2000.1158-15	75-00-3	Chloroethane	ND	mg / Kg	1	0.025	1	10/17/00
X00398	XG.2000.1158-15	67-66-3	Chloroform	ND	mg / Kg	1	0.005	1	10/17/00
X00398	XG.2000.1158-15	74-87-3	Chloromethane	ND	mg / Kg	1	0.025	1	10/17/00
X00398	XG.2000.1158-15	156-59-2	cis-1,2 dichloroethene	ND	mg / Kg	1	0.005	1	10/17/00
X00398	XG.2000.1158-15	10061-01-5	cis-1,3 dichloropropene	ND	mg / Kg	1	0.005	1	10/17/00
X00398	XG.2000.1158-15	74-95-3	Dibromomethane	ND	mg / Kg	1	0.005	1	10/17
X00398	XG.2000.1158-15	97-63-2	Ethyl methacrylate	ND	mg / Kg	1	0.025	1	10/17
X00398	XG.2000.1158-15	100-41-4	Ethylbenzene	ND	mg / Kg	1	0.005	1	10/17/00
X00398	XG.2000.1158-15		Freon 113	ND	mg / Kg	1	0.025	1	10/17/00
X00398	XG.2000.1158-15	75-71-8	Freon 12	ND	mg / Kg	1	0.05	1	10/17/00
X00398	XG.2000.1158-15	74-88-4	Iodomethane	ND	mg / Kg	1	0.025	1	10/17/00
X00398	XG.2000.1158-15	1634-04-4	Methyl t-butyl ether (MTBE)	ND	mg / Kg	1	0.005	1	10/17/00
X00398	XG.2000.1158-15	75-09-2	Methylene chloride	ND	mg / Kg	1	0.05	1	10/17/00
X00398	XG.2000.1158-15	91-20-3	Naphthalene	ND	mg / Kg	1	0.025	1	10/17/00
X00398	XG.2000.1158-15	95-47-6	o-Xylene	ND	mg / Kg	1	0.005	1	10/17/00
X00398	XG.2000.1158-15	108-38-3/106-42	p/m Xylenes	ND	mg / Kg	1	0.01	1	10/17/00
X00398	XG.2000.1158-15	100-42-5	Styrene	ND	mg / Kg	1	0.005	1	10/17/00
X00398	XG.2000.1158-15	156-60-5	t-1,2 Dichloroethene	ND	mg / Kg	1	0.005	1	10/17/00
X00398	XG.2000.1158-15	10061-02-6	t-1,3 Dichloropropene	ND	mg / Kg	1	0.005	1	10/17/00
X00398	XG.2000.1158-15	127-18-4	Tetrachloroethene	ND	mg / Kg	1	0.005	1	10/17/00
X00398	XG.2000.1158-15	108-88-3	Toluene	ND	mg / Kg	1	0.005	1	10/17/00
X00398	XG.2000.1158-15	79-01-6	Trichloroethene	ND	mg / Kg	1	0.005	1	10/17/00
X00398	XG.2000.1158-15	75-69-4	Trichlorofluoromethane	ND	mg / Kg	1	0.025	1	10/17/00
X00398	XG.2000.1158-15	108-05-4	Vinyl acetate	ND	mg / Kg	1	0.025	1	10/17/00
X00398	XG.2000.1158-15	75-01-4	Vinyl chloride	ND	mg / Kg	1	0.025	1	10/17/00

0010162-09C **SW846 3550A/8270B SVOCs by GC/MS**

X00406	XG.2000.1171-8	120-82-1	1,2,4-Trichlorobenzene	ND	mg / Kg	1	0.03	10/17/00
X00406	XG.2000.1171-8	95-50-1	1,2-Dichlorobenzene	ND	mg / Kg	1	0.03	10/17/00
X00406	XG.2000.1171-8	541-73-1	1,3-Dichlorobenzene	ND	mg / Kg	1	0.03	10/17/00
X00406	XG.2000.1171-8	106-46-7	1,4-Dichlorobenzene	ND	mg / Kg	1	0.03	10/17/00

Certificate of Analysis

t: CH2MHILL
Project: 0010162 KAFB

X00406	XG.2000.1171-8	90-12-0	1-Methylnaphthalene	ND	mg / Kg	1	0.03	10/17/00
X00406	XG.2000.1171-8	58-90-2	2,3,4,6-Tetrachlorophenol	ND	mg / Kg	1	1.5	10/17/00
X00406	XG.2000.1171-8	95-95-4	2,4,5-Trichlorophenol	ND	mg / Kg	1	0.3	10/17/00
X00406	XG.2000.1171-8	88-06-2	2,4,6-Trichlorophenol	ND	mg / Kg	1	0.3	10/17/00
X00406	XG.2000.1171-8	120-83-2	2,4-Dichlorophenol	ND	mg / Kg	1	0.3	10/17/00
X00406	XG.2000.1171-8	105-67-9	2,4-Dimethylphenol	ND	mg / Kg	1	0.03	10/17/00
X00406	XG.2000.1171-8	51-28-5	2,4-Dinitrophenol	ND	mg / Kg	1	0.67	10/17/00
X00406	XG.2000.1171-8	121-14-2	2,4-Dinitrotoluene	ND	mg / Kg	1	0.3	10/17/00
X00406	XG.2000.1171-8	606-20-2	2,6-Dinitrotoluene	ND	mg / Kg	1	0.3	10/17/00
X00406	XG.2000.1171-8	91-58-7	2-Chloronaphthalene	ND	mg / Kg	1	0.03	10/17/00
X00406	XG.2000.1171-8	95-57-8	2-Chlorophenol	ND	mg / Kg	1	0.03	10/17/00
X00406	XG.2000.1171-8	91-57-6	2-Methylnaphthalene	ND	mg / Kg	1	0.03	10/17/00
X00406	XG.2000.1171-8	95-48-7	2-Methylphenol	ND	mg / Kg	1	0.03	10/17/00
X00406	XG.2000.1171-8	88-74-4	2-Nitroaniline	ND	mg / Kg	1	0.3	10/17/00
X00406	XG.2000.1171-8	88-75-5	2-Nitrophenol	ND	mg / Kg	1	0.3	10/17/00
X00406	XG.2000.1171-8		3+4 Methylphenol	ND	mg / Kg	1	0.03	10/17/00
X00406	XG.2000.1171-8	91-94-1	3,3-Dichlorobenzidine	ND	mg / Kg	1	0.3	10/17/00
X00406	XG.2000.1171-8	99-09-2	3-Nitroaniline	ND	mg / Kg	1	0.3	10/17/00
X00406	XG.2000.1171-8	534-52-1	4,6-Dinitro-2-methylphenol	ND	mg / Kg	1	0.3	10/17/00
X00406	XG.2000.1171-8	101-55-3	4-Bromophenyl-phenylether	ND	mg / Kg	1	0.03	10/17/00
X00406	XG.2000.1171-8	59-50-7	4-Chloro-3-methylphenol	ND	mg / Kg	1	0.3	10/17/00
X00406	XG.2000.1171-8	106-47-8	4-Chloroaniline	ND	mg / Kg	1	0.3	10/17/00
[illegible]	XG.2000.1171-8	7005-72-3	4-Chlorophenyl-phenylether	ND	mg / Kg	1	0.03	10/17/00
[illegible]	XG.2000.1171-8	100-01-6	4-Nitroaniline	ND	mg / Kg	1	0.3	10/17/00
X00406	XG.2000.1171-8	100-02-7	4-Nitrophenol	ND	mg / Kg	1	0.6	10/17/00
X00406	XG.2000.1171-8	83-32-9	Acenaphthene	ND	mg / Kg	1	0.03	10/17/00
X00406	XG.2000.1171-8	208-96-8	Acenaphthylene	ND	mg / Kg	1	0.03	10/17/00
X00406	XG.2000.1171-8	62-53-3	Aniline	ND	mg / Kg	1	0.3	10/17/00
X00406	XG.2000.1171-8	120-12-7	Anthracene	ND	mg / Kg	1	0.03	10/17/00
X00406	XG.2000.1171-8		Azobenzene&1,2-Diphenylhydrazine	ND	mg / Kg	1	0.03	10/17/00
X00406	XG.2000.1171-8	56-55-3	Benzo (a) anthracene	ND	mg / Kg	1	0.03	10/17/00
X00406	XG.2000.1171-8	50-32-8	Benzo(a)pyrene	ND	mg / Kg	1	0.03	10/17/00
X00406	XG.2000.1171-8		Benzo(b & k)fluoranthene	ND	mg / Kg	1	0.03	10/17/00
X00406	XG.2000.1171-8	191-24-2	Benzo(g,h,i)perylene	ND	mg / Kg	1	0.3	10/17/00
X00406	XG.2000.1171-8	64-85-0	Benzoic acid	ND	mg / Kg	1	3	10/17/00
X00406	XG.2000.1171-8	100-51-6	Benzyl alcohol	ND	mg / Kg	1	1.5	10/17/00
X00406	XG.2000.1171-8	111-44-4	bis (2-Chloroethyl) ether	ND	mg / Kg	1	0.03	10/17/00
X00406	XG.2000.1171-8	111-91-1	bis(2-Chloroethoxy)methane	ND	mg / Kg	1	0.03	10/17/00
X00406	XG.2000.1171-8	108-60-1	bis(2-Chloroisopropyl)ether	ND	mg / Kg	1	0.03	10/17/00
X00406	XG.2000.1171-8	117-81-7	bis(2-Ethylhexyl)phthalate	ND	mg / Kg	1	0.3	10/17/00
X00406	XG.2000.1171-8	85-68-7	Butylbenzylphthalate	ND	mg / Kg	1	0.03	10/17/00
X00406	XG.2000.1171-8	218-01-9	Chrysene	ND	mg / Kg	1	0.03	10/17/00
X00406	XG.2000.1171-8	84-74-2	di-n-Butylphthalate	ND	mg / Kg	1	0.3	10/17/00
X00406	XG.2000.1171-8	117-84-0	di-n-Octylpthalate	ND	mg / Kg	1	0.3	10/17/00
X00406	XG.2000.1171-8	53-70-3	Dibenz(a,h)anthracene	ND	mg / Kg	1	0.3	10/17/00
X00406	XG.2000.1171-8	132-64-9	Dibenzofuran	ND	mg / Kg	1	0.03	10/17/00
X00406	XG.2000.1171-8	84-66-2	Diethylphthalate	ND	mg / Kg	1	0.03	10/17/00
[illegible]	XG.2000.1171-8	131-11-3	Dimethylphthalate	ND	mg / Kg	1	0.03	10/17/00

Client: **CH2MHILL**

Project: **0010162** **KAFB**

X00406	XG.2000.1171-8	206-44-0	Fluoranthene	ND	mg / Kg	1	0.03		10/17/00
X00406	XG.2000.1171-8	86737	Fluorene	ND	mg / Kg	1	0.03		10/17/00
X00406	XG.2000.1171-8	118-74-1	Hexachlorobenzene	ND	mg / Kg	1	0.03		10/17/00
X00406	XG.2000.1171-8	87-68-3	Hexachlorobutadiene	ND	mg / Kg	1	0.03		10/17/00
X00406	XG.2000.1171-8	77-47-4	Hexachlorocyclopentadiene	ND	mg / Kg	1	1.5		10/17/00
X00406	XG.2000.1171-8	67-72-1	Hexachloroethane	ND	mg / Kg	1	0.03		10/17/00
X00406	XG.2000.1171-8	193-39-5	Indeno(1,2,3-cd)pyrene	ND	mg / Kg	1	0.3		10/17/00
X00406	XG.2000.1171-8	78-59-1	Isophorone	ND	mg / Kg	1	0.03		10/17/00
X00406	XG.2000.1171-8	621-64-7	n-Nitroso-di-n-propylamine	ND	mg / Kg	1	0.03		10/17/00
X00406	XG.2000.1171-8	62-75-9	n-Nitroso-dimethyl-amine	ND	mg / Kg	1	0.3		10/17/00
X00406	XG.2000.1171-8	86-30-6	n-Nitrosodiphenylamine	ND	mg / Kg	1	0.03		10/17/00
X00406	XG.2000.1171-8	91-20-3	Naphthalene	ND	mg / Kg	1	0.03		10/17/00
X00406	XG.2000.1171-8	98-95-3	Nitrobenzene	ND	mg / Kg	1	0.03		10/17/00
X00406	XG.2000.1171-8	87-86-5	Pentachlorophenol	ND	mg / Kg	1	0.3		10/17/00
X00406	XG.2000.1171-8	85-01-8	Phenanthrene	ND	mg / Kg	1	0.03		10/17/00
X00406	XG.2000.1171-8	108-95-2	Phenol	ND	mg / Kg	1	0.3		10/17/00
X00406	XG.2000.1171-8	129-00-0	Pyrene	ND	mg / Kg	1	0.03		10/17/00
X00406	XG.2000.1171-8	110-86-1	Pyridine	ND	mg / Kg	1	0.3		10/17/00

Client Sample ID ***SB-27-305'*** Sample Matrix ***SOIL*** Sample Collected ***10/14/00 15:45:00***

QC Group	Run Sequence	CAS #	Analyte	Result	Units	Dilution Factor	Detection Limit	Code	Run Date
0010162-10A		**SW846 5030A/8015A GRO by GC/FID**							
X00408	XG.2000.1155-17		Gasoline Range Organics	ND	mg / Kg	1	0.25		10/17/00
0010162-10A		**SW846 ME/8015A Diesel Range Organics by GC/FID**							
X00407	XG.2000.1150-17		Diesel Range Organics	ND	mg / Kg	1	25		10/17/00
0010162-10B		**SW846 5030A/8021B Purgeable VOCs by GC/PID**							
X00392	XG.2000.1164-7	71-43-2	Benzene	ND	mg / Kg	1	0.005		10/18/00
X00392	XG.2000.1164-7	100-41-4	Ethylbenzene	ND	mg / Kg	1	0.005		10/18/00
X00392	XG.2000.1164-7	95-47-6	o-Xylene	ND	mg / Kg	1	0.005		10/18/00
X00392	XG.2000.1164-7	108-38-3/106-42	p/m-Xylenes	ND	mg / Kg	1	0.01		10/18/00
X00392	XG.2000.1164-7	108-88-3	Toluene	ND	mg / Kg	1	0.005		10/18/00

Client Sample ID ***TRIP*** Sample Matrix ***H2O*** Sample Collected ***10/14/00 15:45:00***

QC Group	Run Sequence	CAS #	Analyte	Result	Units	Dilution Factor	Detection Limit	Code	Run Date
0010162-11A		**SW846 8260A Purgeable VOCs by GC/MS**							
X00410	XG.2000.1175-4	75-34-3	1,1 Dichloroethane	ND	ug / L	1	1		10/18/00
X00410	XG.2000.1175-4	75-34-3	1,1 Dichloroethene	ND	ug / L	1	1		10/18/00
X00410	XG.2000.1175-4	71-55-6	1,1,1 Trichloroethane	ND	ug / L	1	1		10/18

Certificate of Analysis

: CH2MHILL
Project: 0010162 KAFB

X00410	XG.2000.1175-4	630-20-6	1,1,1,2 Tetrachloroethane	ND	ug / L	1	1	10/18/00
X00410	XG.2000.1175-4	79-00-5	1,1,2 Trichloroethane	ND	ug / L	1	1	10/18/00
X00410	XG.2000.1175-4	79-34-5	1,1,2,2 Tetrachloroethane	ND	ug / L	1	1	10/18/00
X00410	XG.2000.1175-4	106-93-4	1,2 Dibromoethane (EDB)	ND	ug / L	1	1	10/18/00
X00410	XG.2000.1175-4	95-50-1	1,2 Dichlorobenzene	ND	ug / L	1	1	10/18/00
X00410	XG.2000.1175-4	107-06-2	1,2 Dichloroethane	ND	ug / L	1	1	10/18/00
X00410	XG.2000.1175-4	78-87-5	1,2 Dichloropropane	ND	ug / L	1	1	10/18/00
X00410	XG.2000.1175-4	96-18-4	1,2,3 Trichloropropane	ND	ug / L	1	1	10/18/00
X00410	XG.2000.1175-4	95-63-6	1,2,4-Trimethylbenzene	ND	ug / L	1	1	10/18/00
X00410	XG.2000.1175-4	541-73-1	1,3 Dichlorobenzene	ND	ug / L	1	1	10/18/00
X00410	XG.2000.1175-4	108-67-8	1,3,5-Trimethylbenzene	ND	ug / L	1	1	10/18/00
X00410	XG.2000.1175-4	764-41-0	1,4 Dichloro-2-butene	ND	ug / L	1	10	10/18/00
X00410	XG.2000.1175-4	106-46-7	1,4 Dichlorobenzene	ND	ug / L	1	1	10/18/00
X00410	XG.2000.1175-4	78-93-3	2-Butanone (MEK)	ND	ug / L	1	5	10/18/00
X00410	XG.2000.1175-4	110-75-8	2-Chloroethylvinylether	ND	ug / L	1	5	10/18/00
X00410	XG.2000.1175-4	591-78-6	2-Hexanone (MBK)	ND	ug / L	1	5	10/18/00
X00410	XG.2000.1175-4	108-10-1	4-Methyl-2-pentanone (MIBK)	ND	ug / L	1	5	10/18/00
X00410	XG.2000.1175-4	67-64-1	Acetone	ND	ug / L	1	10	10/18/00
X00410	XG.2000.1175-4	107-02-8	Acrolein	ND	ug / L	1	20	10/18/00
X00410	XG.2000.1175-4	107-13-1	Acrylonitrile	ND	ug / L	1	20	10/18/00
X00410	XG.2000.1175-4	71-43-2	Benzene	ND	ug / L	1	1	10/18/00
X00410	XG.2000.1175-4	75-27-4	Bromodichloromethane	ND	ug / L	1	1	10/18/00
[illegible]	XG.2000.1175-4	75-25-2	Bromoform	ND	ug / L	1	1	10/18/00
[illegible]	XG.2000.1175-4	74-83-9	Bromomethane	ND	ug / L	1	5	10/18/00
X00410	XG.2000.1175-4	75-15-0	Carbon disulfide	ND	ug / L	1	5	10/18/00
X00410	XG.2000.1175-4	56-23-5	Carbon tetrachloride	ND	ug / L	1	1	10/18/00
X00410	XG.2000.1175-4	108-90-7	Chlorobenzene	ND	ug / L	1	1	10/18/00
X00410	XG.2000.1175-4	124-48-1	Chlorodibromomethane	ND	ug / L	1	1	10/18/00
X00410	XG.2000.1175-4	75-00-3	Chloroethane	ND	ug / L	1	5	10/18/00
X00410	XG.2000.1175-4	67-66-3	Chloroform	ND	ug / L	1	1	10/18/00
X00410	XG.2000.1175-4	74-87-3	Chloromethane	ND	ug / L	1	5	10/18/00
X00410	XG.2000.1175-4	156-59-2	cis-1,2 dichloroethene	ND	ug / L	1	1	10/18/00
X00410	XG.2000.1175-4	10061-01-5	cis-1,3 dichloropropene	ND	ug / L	1	1	10/18/00
X00410	XG.2000.1175-4	74-95-3	Dibromomethane	ND	ug / L	1	1	10/18/00
X00410	XG.2000.1175-4	97-63-2	Ethyl methacrylate	ND	ug / L	1	5	10/18/00
X00410	XG.2000.1175-4	100-41-4	Ethylbenzene	ND	ug / L	1	1	10/18/00
X00410	XG.2000.1175-4		Freon 113	ND	ug / L	1	5	10/18/00
X00410	XG.2000.1175-4	75-71-8	Freon 12	ND	ug / L	1	10	10/18/00
X00410	XG.2000.1175-4	74-88-4	Iodomethane	ND	ug / L	1	5	10/18/00
X00410	XG.2000.1175-4	1634-04-4	Methyl t-butyl ether (MTBE)	ND	ug / L	1	1	10/18/00
X00410	XG.2000.1175-4	75-09-2	Methylene chloride	ND	ug / L	1	10	10/18/00
X00410	XG.2000.1175-4	91-20-3	Naphthalene	ND	ug / L	1	5	10/18/00
X00410	XG.2000.1175-4	95-47-6	o-Xylene	ND	ug / L	1	1	10/18/00
X00410	XG.2000.1175-4	108-38-3/106-42	p/m Xylenes	ND	ug / L	1	2	10/18/00
X00410	XG.2000.1175-4	100-42-5	Styrene	ND	ug / L	1	1	10/18/00
X00410	XG.2000.1175-4	156-60-5	t-1,2 Dichloroethene	ND	ug / L	1	1	10/18/00
X00410	XG.2000.1175-4	10061-02-6	t-1,3 Dichloropropene	ND	ug / L	1	1	10/18/00
[illegible]0	XG.2000.1175-4	127-18-4	Tetrachloroethene	ND	ug / L	1	1	10/18/00

Certificate of Analysis

Client: **CH2MHILL**

Project: **0010162** **KAFB**

X00410	XG.2000.1175-4	108-88-3	Toluene	ND	ug / L	1	1		10/18/00
X00410	XG.2000.1175-4	79-01-6	Trichloroethene	ND	ug / L	1	1		10/18/00
X00410	XG.2000.1175-4	75-69-4	Trichlorofluoromethane	ND	ug / L	1	5		10/18/00
X00410	XG.2000.1175-4	108-05-4	Vinyl acetate	ND	ug / L	1	5		10/18/00
X00410	XG.2000.1175-4	75-01-4	Vinyl chloride	ND	ug / L	1	5		10/18/00

**** Sample specific Detection Limit is determined by multiplying the sample Dilution Factor by the listed Reporting Detection Limit. ****

**** ND = Not detected: less than the sample specific Detection Limit. Results relate only to the items tested. ****

footnote [1] Sample was analyzed with headspace.

Quality Control Summary

Client: CH2MHILL
Project: 0010162 KAFB

Explanation of codes

D *Not applicable due to sample dilution*
L *Not applicable due to MDL proximity*

QC Type **LCS: Lab Control Spike** QC Matrix **SOLID**

QC Group	Run Sequence	CAS #	Analyte	Result	Units	Dilution Factor	Detection Limit	Code	Run Date
X00392-002		**SW846 5030A/8021B Purgeable VOCs by GC/PID**							
X00392	XG.2000.1112-2	71-43-2	Benzene	101	% Recovery	1	NA		10/05/00
X00392	XG.2000.1112-2	100-41-4	Ethylbenzene	103	% Recovery	1	NA		10/05/00
X00392	XG.2000.1112-2	95-47-6	o-Xylene	100	% Recovery	1	NA		10/05/00
X00392	XG.2000.1112-2	108-38-3/106-42	p/m-Xylenes	103	% Recovery	1	NA		10/05/00
X00392	XG.2000.1112-2	108-88-3	Toluene	100	% Recovery	1	NA		10/05/00
X00398-005		**SW846 8260A Purgeable VOCs by GC/MS**							
X00398	XG.2000.1158-3	75-34-3	1,1 Dichloroethene	108	% Recovery	1	NA		10/10/00
X00398	XG.2000.1206-2	75-34-3	1,1 Dichloroethene	108	% Recovery	1	NA		10/10/00
X00398	XG.2000.1158-3	106-46-7	1,4 Dichlorobenzene	99	% Recovery	1	NA		10/10/00
X00398	XG.2000.1206-2	106-46-7	1,4 Dichlorobenzene	99	% Recovery	1	NA		10/10/00
X00398	XG.2000.1158-3	71-43-2	Benzene	108	% Recovery	1	NA		10/10/00
X00398	XG.2000.1206-2	71-43-2	Benzene	108	% Recovery	1	NA		10/10/00
X00398	XG.2000.1158-3	108-90-7	Chlorobenzene	105	% Recovery	1	NA		10/10/00
X00398	XG.2000.1206-2	108-90-7	Chlorobenzene	105	% Recovery	1	NA		10/10/00
X00398	XG.2000.1158-3	108-88-3	Toluene	106	% Recovery	1	NA		10/10/00
8	XG.2000.1206-2	108-88-3	Toluene	106	% Recovery	1	NA		10/10/00
X00398	XG.2000.1158-3	79-01-6	Trichloroethene	108	% Recovery	1	NA		10/10/00
X00398	XG.2000.1206-2	79-01-6	Trichloroethene	108	% Recovery	1	NA		10/10/00
X00406-002		**SW846 3550A/8270B SVOCs by GC/MS**							
X00406	XG.2000.1171-2	120-82-1	1,2,4-Trichlorobenzene	70	% Recovery	1	NA		10/17/00
X00406	XG.2000.1171-2	106-46-7	1,4-Dichlorobenzene	69	% Recovery	1	NA		10/17/00
X00406	XG.2000.1171-2	121-14-2	2,4-Dinitrotoluene	74	% Recovery	1	NA		10/17/00
X00406	XG.2000.1171-2	95-57-8	2-Chlorophenol	83	% Recovery	1	NA		10/17/00
X00406	XG.2000.1171-2	59-50-7	4-Chloro-3-methylphenol	87	% Recovery	1	NA		10/17/00
X00406	XG.2000.1171-2	100-02-7	4-Nitrophenol	91	% Recovery	1	NA		10/17/00
X00406	XG.2000.1171-2	83-32-9	Acenaphthene	79	% Recovery	1	NA		10/17/00
X00406	XG.2000.1171-2	117-84-0	di-n-Octylpthalate	74	% Recovery	1	NA		10/17/00
X00406	XG.2000.1171-2	621-64-7	n-Nitroso-di-n-propylamine	79	% Recovery	1	NA		10/17/00
X00406	XG.2000.1171-2	87-86-5	Pentachlorophenol	78	% Recovery	1	NA		10/17/00
X00406	XG.2000.1171-2	108-95-2	Phenol	82	% Recovery	1	NA		10/17/00
X00406	XG.2000.1171-2	129-00-0	Pyrene	84	% Recovery	1	NA		10/17/00
X00407-002		**SW846 ME/8015A Diesel Range Organics by GC/FID**							
X00407	XG.2000.1150-10		Diesel Range Organics	100	% Recovery	1	NA		10/17/00
X00408-002		**SW846 5030A/8015A GRO by GC/FID**							
X00408	XG.2000.1155-2		Gasoline Range Organics	95	% Recovery	1	NA		10/16/00
X00411-002		**SW846 5030A/8021B Purgeable VOCs by GC/PID**							
X00411	XG.2000.1164-9	108-38-3/106-42	p/m-Xylenes	106	% Recovery	1	NA		10/18/00

Quality Control Summary

Client: CH2MHILL
Project: 0010162 KAFB

Explanation of codes
D *Not applicable due to sample dilu*
L *Not applicable due to MDL proximi*

QC Type **LCSD: Lab Control Spike Duplicate Accuracy** QC Matrix **SOLID**

QC Group	Run Sequence	CAS #	Analyte	Result	Units	Dilution Factor	Detection Limit	Code	Run Date
X00392-003		**SW846 5030A/8021B Purgeable VOCs by GC/PID**							
X00392	XG.2000.1112-3	71-43-2	Benzene	107	% Recovery	1	NA		10/05/0(
X00392	XG.2000.1112-3	100-41-4	Ethylbenzene	109	% Recovery	1	NA		10/05/0(
X00392	XG.2000.1112-3	95-47-6	o-Xylene	108	% Recovery	1	NA		10/05/0(
X00392	XG.2000.1112-3	108-38-3/106-42	p/m-Xylenes	109	% Recovery	1	NA		10/05/0(
X00392	XG.2000.1112-3	108-88-3	Toluene	106	% Recovery	1	NA		10/05/0(
X00398-006		**SW846 8260A Purgeable VOCs by GC/MS**							
X00398	XG.2000.1158-4	75-34-3	1,1 Dichloroethene	105	% Recovery	1	NA		10/10/0(
X00398	XG.2000.1206-3	75-34-3	1,1 Dichloroethene	105	% Recovery	1	NA		10/10/0(
X00398	XG.2000.1158-4	106-46-7	1,4 Dichlorobenzene	99	% Recovery	1	NA		10/10/0(
X00398	XG.2000.1206-3	106-46-7	1,4 Dichlorobenzene	99	% Recovery	1	NA		10/10/0(
X00398	XG.2000.1158-4	71-43-2	Benzene	107	% Recovery	1	NA		10/10/0(
X00398	XG.2000.1206-3	71-43-2	Benzene	107	% Recovery	1	NA		10/10/0(
X00398	XG.2000.1158-4	108-90-7	Chlorobenzene	104	% Recovery	1	NA		10/10/0(
X00398	XG.2000.1206-3	108-90-7	Chlorobenzene	104	% Recovery	1	NA		10/10/0(
X00398	XG.2000.1158-4	108-88-3	Toluene	104	% Recovery	1	NA		10/10/0(
X00398	XG.2000.1206-3	108-88-3	Toluene	104	% Recovery	1	NA		10/1(
X00398	XG.2000.1158-4	79-01-6	Trichloroethene	108	% Recovery	1	NA		10/10/0(
X00398	XG.2000.1206-3	79-01-6	Trichloroethene	108	% Recovery	1	NA		10/10/0(
X00406-003		**SW846 3550A/8270B SVOCs by GC/MS**							
X00406	XG.2000.1171-3	120-82-1	1,2,4-Trichlorobenzene	72	% Recovery	1	NA		10/17/0(
X00406	XG.2000.1171-3	106-46-7	1,4-Dichlorobenzene	71	% Recovery	1	NA		10/17/0(
X00406	XG.2000.1171-3	121-14-2	2,4-Dinitrotoluene	74	% Recovery	1	NA		10/17/0(
X00406	XG.2000.1171-3	95-57-8	2-Chlorophenol	86	% Recovery	1	NA		10/17/0(
X00406	XG.2000.1171-3	59-50-7	4-Chloro-3-methylphenol	85	% Recovery	1	NA		10/17/0(
X00406	XG.2000.1171-3	100-02-7	4-Nitrophenol	90	% Recovery	1	NA		10/17/0(
X00406	XG.2000.1171-3	83-32-9	Acenaphthene	79	% Recovery	1	NA		10/17/0(
X00406	XG.2000.1171-3	117-84-0	di-n-Octylpthalate	74	% Recovery	1	NA		10/17/0(
X00406	XG.2000.1171-3	621-64-7	n-Nitroso-di-n-propylamine	78	% Recovery	1	NA		10/17/0(
X00406	XG.2000.1171-3	87-86-5	Pentachlorophenol	80	% Recovery	1	NA		10/17/0(
X00406	XG.2000.1171-3	108-95-2	Phenol	84	% Recovery	1	NA		10/17/0(
X00406	XG.2000.1171-3	129-00-0	Pyrene	88	% Recovery	1	NA		10/17/0(
X00407-003		**SW846 ME/8015A Diesel Range Organics by GC/FID**							
X00407	XG.2000.1150-11		Diesel Range Organics	103	% Recovery	1	NA		10/17/0(
X00408-003		**SW846 5030A/8015A GRO by GC/FID**							
X00408	XG.2000.1155-3		Gasoline Range Organics	94	% Recovery	1	NA		10/16/0(
X00411-003		**SW846 5030A/8021B Purgeable VOCs by GC/PID**							
X00411	XG.2000.1164-10	108-38-3/106-42	p/m-Xylenes	104	% Recovery	1	NA		10/18/0(

Quality Control Summary

Client: CH2MHILL

Project: 0010162 KAFB

Explanation of codes

D Not applicable due to sample dilution

L Not applicable due to MDL proximity

QC Type: **LCSD: Lab Control Spike Duplicate Precision** QC Matrix: **SOLID**

QC Group	Run Sequence	CAS #	Analyte	Result	Units	Dilution Factor	Detection Limit	Code	Run Date
X00392-003		**SW846 5030A/8021B Purgeable VOCs by GC/PID**							
X00392	XG.2000.1112-3	71-43-2	Benzene	6	RPD	1	NA		10/05/00
X00392	XG.2000.1112-3	100-41-4	Ethylbenzene	6	RPD	1	NA		10/05/00
X00392	XG.2000.1112-3	95-47-6	o-Xylene	8	RPD	1	NA		10/05/00
X00392	XG.2000.1112-3	108-38-3/106-42	p/m-Xylenes	6	RPD	1	NA		10/05/00
X00392	XG.2000.1112-3	108-88-3	Toluene	6	RPD	1	NA		10/05/00
X00398-006		**SW846 8260A Purgeable VOCs by GC/MS**							
X00398	XG.2000.1158-4	75-34-3	1,1 Dichloroethene	3	RPD	1	NA		10/10/00
X00398	XG.2000.1206-3	75-34-3	1,1 Dichloroethene	3	RPD	1	NA		10/10/00
X00398	XG.2000.1158-4	106-46-7	1,4 Dichlorobenzene	< 1	RPD	1	NA		10/10/00
X00398	XG.2000.1206-3	106-46-7	1,4 Dichlorobenzene	< 1	RPD	1	NA		10/10/00
X00398	XG.2000.1158-4	71-43-2	Benzene	< 1	RPD	1	NA		10/10/00
X00398	XG.2000.1206-3	71-43-2	Benzene	< 1	RPD	1	NA		10/10/00
X00398	XG.2000.1158-4	108-90-7	Chlorobenzene	2	RPD	1	NA		10/10/00
X00398	XG.2000.1206-3	108-90-7	Chlorobenzene	2	RPD	1	NA		10/10/00
X00398	XG.2000.1158-4	108-88-3	Toluene	1	RPD	1	NA		10/10/00
8	XG.2000.1206-3	108-88-3	Toluene	1	RPD	1	NA		10/10/00
X00398	XG.2000.1158-4	79-01-6	Trichloroethene	< 1	RPD	1	NA		10/10/00
X00398	XG.2000.1206-3	79-01-6	Trichloroethene	< 1	RPD	1	NA		10/10/00
X00406-003		**SW846 3550A/8270B SVOCs by GC/MS**							
X00406	XG.2000.1171-3	120-82-1	1,2,4-Trichlorobenzene	2	RPD	1	NA		10/17/00
X00406	XG.2000.1171-3	106-46-7	1,4-Dichlorobenzene	3	RPD	1	NA		10/17/00
X00406	XG.2000.1171-3	121-14-2	2,4-Dinitrotoluene	< 1	RPD	1	NA		10/17/00
X00406	XG.2000.1171-3	95-57-8	2-Chlorophenol	3	RPD	1	NA		10/17/00
X00406	XG.2000.1171-3	59-50-7	4-Chloro-3-methylphenol	2	RPD	1	NA		10/17/00
X00406	XG.2000.1171-3	100-02-7	4-Nitrophenol	< 1	RPD	1	NA		10/17/00
X00406	XG.2000.1171-3	83-32-9	Acenaphthene	< 1	RPD	1	NA		10/17/00
X00406	XG.2000.1171-3	117-84-0	di-n-Octylpthalate	1	RPD	1	NA		10/17/00
X00406	XG.2000.1171-3	621-64-7	n-Nitroso-di-n-propylamine	< 1	RPD	1	NA		10/17/00
X00406	XG.2000.1171-3	87-86-5	Pentachlorophenol	1	RPD	1	NA		10/17/00
X00406	XG.2000.1171-3	108-95-2	Phenol	2	RPD	1	NA		10/17/00
X00406	XG.2000.1171-3	129-00-0	Pyrene	5	RPD	1	NA		10/17/00
X00407-003		**SW846 ME/8015A Diesel Range Organics by GC/FID**							
X00407	XG.2000.1150-11		Diesel Range Organics	3	RPD	1	NA		10/17/00
X00408-003		**SW846 5030A/8015A GRO by GC/FID**							
X00408	XG.2000.1155-3		Gasoline Range Organics	< 1	RPD	1	NA		10/16/00
X00411-003		**SW846 5030A/8021B Purgeable VOCs by GC/PID**							
X00411	XG.2000.1164-10	108-38-3/106-42	p/m-Xylenes	1	RPD	1	NA		10/18/00

Quality Control Summary

Client: CH2MHILL
Project: 0010162 KAFB

Explanation of codes	
D	Not applicable due to sample diluti
L	Not applicable due to MDL proxim

QC Type: **MB: Method Blank** QC Matrix: **SOLID**

QC Group	Run Sequence	CAS #	Analyte	Result	Units	Dilution Factor	Detection Limit	Code	Run Date
X00392-001		**SW846 5030A/8021B Purgeable VOCs by GC/PID**							
X00392	XG.2000.1112-1	71-43-2	Benzene	ND	mg / Kg	1	0.005		10/05/0(
X00392	XG.2000.1112-1	100-41-4	Ethylbenzene	ND	mg / Kg	1	0.005		10/05/0(
X00392	XG.2000.1112-1	95-47-6	o-Xylene	ND	mg / Kg	1	0.005		10/05/0(
X00392	XG.2000.1112-1	108-38-3/106-42	p/m-Xylenes	ND	mg / Kg	1	0.01		10/05/0(
X00392	XG.2000.1112-1	108-88-3	Toluene	ND	mg / Kg	1	0.005		10/05/0(
X00392-014		**SW846 5030A/8021B Purgeable VOCs by GC/PID**							
X00392	XG.2000.1156-1	71-43-2	Benzene	ND	mg / Kg	1	0.005		10/17/0(
X00392	XG.2000.1156-1	100-41-4	Ethylbenzene	ND	mg / Kg	1	0.005		10/17/0(
X00392	XG.2000.1156-1	95-47-6	o-Xylene	ND	mg / Kg	1	0.005		10/17/0(
X00392	XG.2000.1156-1	108-38-3/106-42	p/m-Xylenes	ND	mg / Kg	1	0.01		10/17/0(
X00392	XG.2000.1156-1	108-88-3	Toluene	ND	mg / Kg	1	0.005		10/17/0(
X00392-024		**SW846 5030A/8021B Purgeable VOCs by GC/PID**							
X00392	XG.2000.1164-4	71-43-2	Benzene	ND	mg / Kg	1	0.005		10/18/0(
X00392	XG.2000.1164-4	100-41-4	Ethylbenzene	ND	mg / Kg	1	0.005		10/18/0(
X00392	XG.2000.1164-4	95-47-6	o-Xylene	ND	mg / Kg	1	0.005		10/18
X00392	XG.2000.1164-4	108-38-3/106-42	p/m-Xylenes	ND	mg / Kg	1	0.01		10/18/0
X00392	XG.2000.1164-4	108-88-3	Toluene	ND	mg / Kg	1	0.005		10/18/0(
X00398-001		**SW846 8260A Purgeable VOCs by GC/MS**							
X00398	XG.2000.1158-1	75-34-3	1,1 Dichloroethane	ND	mg / Kg	1	0.005		10/10/0(
X00398	XG.2000.1206-1	75-34-3	1,1 Dichloroethane	ND	mg / Kg	1	0.005		10/10/0(
X00398	XG.2000.1158-1	75-34-3	1,1 Dichloroethene	ND	mg / Kg	1	0.005		10/10/0(
X00398	XG.2000.1206-1	75-34-3	1,1 Dichloroethene	ND	mg / Kg	1	0.005		10/10/0(
X00398	XG.2000.1158-1	71-55-6	1,1,1 Trichloroethane	ND	mg / Kg	1	0.005		10/10/0(
X00398	XG.2000.1206-1	71-55-6	1,1,1 Trichloroethane	ND	mg / Kg	1	0.005		10/10/0(
X00398	XG.2000.1158-1	630-20-6	1,1,1,2 Tetrachloroethane	ND	mg / Kg	1	0.005		10/10/0(
X00398	XG.2000.1206-1	630-20-6	1,1,1,2 Tetrachloroethane	ND	mg / Kg	1	0.005		10/10/0(
X00398	XG.2000.1158-1	79-00-5	1,1,2 Trichloroethane	ND	mg / Kg	1	0.005		10/10/0(
X00398	XG.2000.1206-1	79-00-5	1,1,2 Trichloroethane	ND	mg / Kg	1	0.005		10/10/0(
X00398	XG.2000.1158-1	79-34-5	1,1,2,2 Tetrachloroethane	ND	mg / Kg	1	0.005		10/10/0(
X00398	XG.2000.1206-1	79-34-5	1,1,2,2 Tetrachloroethane	ND	mg / Kg	1	0.005		10/10/0(
X00398	XG.2000.1158-1	106-93-4	1,2 Dibromoethane (EDB)	ND	mg / Kg	1	0.005		10/10/0(
X00398	XG.2000.1206-1	106-93-4	1,2 Dibromoethane (EDB)	ND	mg / Kg	1	0.005		10/10/0(
X00398	XG.2000.1158-1	95-50-1	1,2 Dichlorobenzene	ND	mg / Kg	1	0.005		10/10/0(
X00398	XG.2000.1206-1	95-50-1	1,2 Dichlorobenzene	ND	mg / Kg	1	0.005		10/10/0(
X00398	XG.2000.1158-1	107-06-2	1,2 Dichloroethane	ND	mg / Kg	1	0.005		10/10/0(
X00398	XG.2000.1206-1	107-06-2	1,2 Dichloroethane	ND	mg / Kg	1	0.005		10/10/0(
X00398	XG.2000.1158-1	78-87-5	1,2 Dichloropropane	ND	mg / Kg	1	0.005		10/10/0(
X00398	XG.2000.1206-1	78-87-5	1,2 Dichloropropane	ND	mg / Kg	1	0.005		10/10/0(
X00398	XG.2000.1158-1	96-18-4	1,2,3 Trichloropropane	ND	mg / Kg	1	0.005		10/10/0
X00398	XG.2000.1206-1	96-18-4	1,2,3 Trichloropropane	ND	mg / Kg	1	0.005		10/10.

Quality Control Summary

Client: CH2MHILL

ect: 0010162 KAFB

Explanation of codes

D Not applicable due to sample dilution

L Not applicable due to MDL proximity

X00398	XG.2000.1158-1	95-63-6	1,2,4-Trimethylbenzene	ND	mg / Kg	1	0.005	10/10/00
X00398	XG.2000.1206-1	95-63-6	1,2,4-Trimethylbenzene	ND	mg / Kg	1	0.005	10/10/00
X00398	XG.2000.1158-1	541-73-1	1,3 Dichlorobenzene	ND	mg / Kg	1	0.005	10/10/00
X00398	XG.2000.1206-1	541-73-1	1,3 Dichlorobenzene	ND	mg / Kg	1	0.005	10/10/00
X00398	XG.2000.1158-1	108-67-8	1,3,5-Trimethylbenzene	ND	mg / Kg	1	0.005	10/10/00
X00398	XG.2000.1206-1	108-67-8	1,3,5-Trimethylbenzene	ND	mg / Kg	1	0.005	10/10/00
X00398	XG.2000.1158-1	764-41-0	1,4 Dichloro-2-butene	ND	mg / Kg	1	0.05	10/10/00
X00398	XG.2000.1206-1	764-41-0	1,4 Dichloro-2-butene	ND	mg / Kg	1	0.05	10/10/00
X00398	XG.2000.1158-1	106-46-7	1,4 Dichlorobenzene	ND	mg / Kg	1	0.005	10/10/00
X00398	XG.2000.1206-1	106-46-7	1,4 Dichlorobenzene	ND	mg / Kg	1	0.005	10/10/00
X00398	XG.2000.1158-1	78-93-3	2-Butanone (MEK)	ND	mg / Kg	1	0.025	10/10/00
X00398	XG.2000.1206-1	78-93-3	2-Butanone (MEK)	ND	mg / Kg	1	0.025	10/10/00
X00398	XG.2000.1158-1	110-75-8	2-Chloroethylvinylether	ND	mg / Kg	1	0.025	10/10/00
X00398	XG.2000.1206-1	110-75-8	2-Chloroethylvinylether	ND	mg / Kg	1	0.025	10/10/00
X00398	XG.2000.1158-1	591-78-6	2-Hexanone (MBK)	ND	mg / Kg	1	0.025	10/10/00
X00398	XG.2000.1206-1	591-78-6	2-Hexanone (MBK)	ND	mg / Kg	1	0.025	10/10/00
X00398	XG.2000.1158-1	108-10-1	4-Methyl-2-pentanone (MIBK)	ND	mg / Kg	1	0.025	10/10/00
X00398	XG.2000.1206-1	108-10-1	4-Methyl-2-pentanone (MIBK)	ND	mg / Kg	1	0.025	10/10/00
X00398	XG.2000.1158-1	67-64-1	Acetone	ND	mg / Kg	1	0.05	10/10/00
X00398	XG.2000.1206-1	67-64-1	Acetone	ND	mg / Kg	1	0.05	10/10/00
X00398	XG.2000.1158-1	107-02-8	Acrolein	ND	mg / Kg	1	0.1	10/10/00
X00398	XG.2000.1206-1	107-02-8	Acrolein	ND	mg / Kg	1	0.1	10/10/00
X00398	XG.2000.1158-1	107-13-1	Acrylonitrile	ND	mg / Kg	1	0.1	10/10/00
X00398	XG.2000.1206-1	107-13-1	Acrylonitrile	ND	mg / Kg	1	0.1	10/10/00
8	XG.2000.1158-1	71-43-2	Benzene	ND	mg / Kg	1	0.005	10/10/00
X00398	XG.2000.1206-1	71-43-2	Benzene	ND	mg / Kg	1	0.005	10/10/00
X00398	XG.2000.1158-1	75-27-4	Bromodichloromethane	ND	mg / Kg	1	0.005	10/10/00
X00398	XG.2000.1206-1	75-27-4	Bromodichloromethane	ND	mg / Kg	1	0.005	10/10/00
X00398	XG.2000.1158-1	75-25-2	Bromoform	ND	mg / Kg	1	0.005	10/10/00
X00398	XG.2000.1206-1	75-25-2	Bromoform	ND	mg / Kg	1	0.005	10/10/00
X00398	XG.2000.1158-1	74-83-9	Bromomethane	ND	mg / Kg	1	0.025	10/10/00
X00398	XG.2000.1206-1	74-83-9	Bromomethane	ND	mg / Kg	1	0.025	10/10/00
X00398	XG.2000.1158-1	75-15-0	Carbon disulfide	ND	mg / Kg	1	0.025	10/10/00
X00398	XG.2000.1206-1	75-15-0	Carbon disulfide	ND	mg / Kg	1	0.025	10/10/00
X00398	XG.2000.1158-1	56-23-5	Carbon tetrachloride	ND	mg / Kg	1	0.005	10/10/00
X00398	XG.2000.1206-1	56-23-5	Carbon tetrachloride	ND	mg / Kg	1	0.005	10/10/00
X00398	XG.2000.1158-1	108-90-7	Chlorobenzene	ND	mg / Kg	1	0.005	10/10/00
X00398	XG.2000.1206-1	108-90-7	Chlorobenzene	ND	mg / Kg	1	0.005	10/10/00
X00398	XG.2000.1158-1	124-48-1	Chlorodibromomethane	ND	mg / Kg	1	0.005	10/10/00
X00398	XG.2000.1206-1	124-48-1	Chlorodibromomethane	ND	mg / Kg	1	0.005	10/10/00
X00398	XG.2000.1158-1	75-00-3	Chloroethane	ND	mg / Kg	1	0.025	10/10/00
X00398	XG.2000.1206-1	75-00-3	Chloroethane	ND	mg / Kg	1	0.025	10/10/00
X00398	XG.2000.1158-1	67-66-3	Chloroform	ND	mg / Kg	1	0.005	10/10/00
X00398	XG.2000.1206-1	67-66-3	Chloroform	ND	mg / Kg	1	0.005	10/10/00
X00398	XG.2000.1158-1	74-87-3	Chloromethane	ND	mg / Kg	1	0.025	10/10/00
X00398	XG.2000.1206-1	74-87-3	Chloromethane	ND	mg / Kg	1	0.025	10/10/00
X00398	XG.2000.1158-1	156-59-2	cis-1,2 dichloroethene	ND	mg / Kg	1	0.005	10/10/00
X00398	XG.2000.1206-1	156-59-2	cis-1,2 dichloroethene	ND	mg / Kg	1	0.005	10/10/00
X00398	XG.2000.1158-1	10061-01-5	cis-1,3 dichloropropene	ND	mg / Kg	1	0.005	10/10/00
98	XG.2000.1206-1	10061-01-5	cis-1,3 dichloropropene	ND	mg / Kg	1	0.005	10/10/00
8	XG.2000.1158-1	74-95-3	Dibromomethane	ND	mg / Kg	1	0.005	10/10/00

Quality Control Summary

Client: CH2MHILL

Project: 0010162 KAFB

Explanation of codes

D *Not applicable due to sample dilut*

L *Not applicable due to MDL proxim*

X00398	XG.2000.1206-1	74-95-3	Dibromomethane	ND	mg / Kg	1	0.005	10/10/0
X00398	XG.2000.1158-1	97-63-2	Ethyl methacrylate	ND	mg / Kg	1	0.025	10/10/0
X00398	XG.2000.1206-1	97-63-2	Ethyl methacrylate	ND	mg / Kg	1	0.025	10/10/0
X00398	XG.2000.1158-1	100-41-4	Ethylbenzene	ND	mg / Kg	1	0.005	10/10/0
X00398	XG.2000.1206-1	100-41-4	Ethylbenzene	ND	mg / Kg	1	0.005	10/10/0
X00398	XG.2000.1158-1		Freon 113	ND	mg / Kg	1	0.025	10/10/0
X00398	XG.2000.1206-1		Freon 113	ND	mg / Kg	1	0.025	10/10/0
X00398	XG.2000.1158-1	75-71-8	Freon 12	ND	mg / Kg	1	0.05	10/10/0
X00398	XG.2000.1206-1	75-71-8	Freon 12	ND	mg / Kg	1	0.05	10/10/0
X00398	XG.2000.1158-1	74-88-4	Iodomethane	ND	mg / Kg	1	0.025	10/10/0
X00398	XG.2000.1206-1	74-88-4	Iodomethane	ND	mg / Kg	1	0.025	10/10/0
X00398	XG.2000.1158-1	1634-04-4	Methyl t-butyl ether (MTBE)	ND	mg / Kg	1	0.005	10/10/0
X00398	XG.2000.1206-1	1634-04-4	Methyl t-butyl ether (MTBE)	ND	mg / Kg	1	0.005	10/10/0
X00398	XG.2000.1158-1	75-09-2	Methylene chloride	ND	mg / Kg	1	0.05	10/10/0
X00398	XG.2000.1206-1	75-09-2	Methylene chloride	ND	mg / Kg	1	0.05	10/10/0
X00398	XG.2000.1158-1	91-20-3	Naphthalene	ND	mg / Kg	1	0.025	10/10/0
X00398	XG.2000.1206-1	91-20-3	Naphthalene	ND	mg / Kg	1	0.025	10/10/0
X00398	XG.2000.1158-1	95-47-6	o-Xylene	ND	mg / Kg	1	0.005	10/10/0
X00398	XG.2000.1206-1	95-47-6	o-Xylene	ND	mg / Kg	1	0.005	10/10/0
X00398	XG.2000.1158-1	108-38-3/106-42	p/m Xylenes	ND	mg / Kg	1	0.01	10/10/0
X00398	XG.2000.1206-1	108-38-3/106-42	p/m Xylenes	ND	mg / Kg	1	0.01	10/10/0
X00398	XG.2000.1158-1	100-42-5	Styrene	ND	mg / Kg	1	0.005	10/10/0
X00398	XG.2000.1206-1	100-42-5	Styrene	ND	mg / Kg	1	0.005	10/10
X00398	XG.2000.1158-1	156-60-5	t-1,2 Dichloroethene	ND	mg / Kg	1	0.005	10/10
X00398	XG.2000.1206-1	156-60-5	t-1,2 Dichloroethene	ND	mg / Kg	1	0.005	10/10/00
X00398	XG.2000.1158-1	10061-02-6	t-1,3 Dichloropropene	ND	mg / Kg	1	0.005	10/10/00
X00398	XG.2000.1206-1	10061-02-6	t-1,3 Dichloropropene	ND	mg / Kg	1	0.005	10/10/00
X00398	XG.2000.1158-1	127-18-4	Tetrachloroethene	ND	mg / Kg	1	0.005	10/10/00
X00398	XG.2000.1206-1	127-18-4	Tetrachloroethene	ND	mg / Kg	1	0.005	10/10/00
X00398	XG.2000.1158-1	108-88-3	Toluene	ND	mg / Kg	1	0.005	10/10/00
X00398	XG.2000.1206-1	108-88-3	Toluene	ND	mg / Kg	1	0.005	10/10/00
X00398	XG.2000.1158-1	79-01-6	Trichloroethene	ND	mg / Kg	1	0.005	10/10/00
X00398	XG.2000.1206-1	79-01-6	Trichloroethene	ND	mg / Kg	1	0.005	10/10/00
X00398	XG.2000.1158-1	75-69-4	Trichlorofluoromethane	ND	mg / Kg	1	0.025	10/10/00
X00398	XG.2000.1206-1	75-69-4	Trichlorofluoromethane	ND	mg / Kg	1	0.025	10/10/00
X00398	XG.2000.1158-1	108-05-4	Vinyl acetate	ND	mg / Kg	1	0.025	10/10/00
X00398	XG.2000.1206-1	108-05-4	Vinyl acetate	ND	mg / Kg	1	0.025	10/10/00
X00398	XG.2000.1158-1	75-01-4	Vinyl chloride	ND	mg / Kg	1	0.025	10/10/00
X00398	XG.2000.1206-1	75-01-4	Vinyl chloride	ND	mg / Kg	1	0.025	10/10/00
X00398-007		**SW846 8260A Purgeable VOCs by GC/MS**						
X00398	XG.2000.1158-5	75-34-3	1,1 Dichloroethane	ND	mg / Kg	1	0.005	10/16/00
X00398	XG.2000.1206-4	75-34-3	1,1 Dichloroethane	ND	mg / Kg	1	0.005	10/16/00
X00398	XG.2000.1158-5	75-34-3	1,1 Dichloroethene	ND	mg / Kg	1	0.005	10/16/00
X00398	XG.2000.1206-4	75-34-3	1,1 Dichloroethene	ND	mg / Kg	1	0.005	10/16/00
X00398	XG.2000.1158-5	71-55-6	1,1,1 Trichloroethane	ND	mg / Kg	1	0.005	10/16/00
X00398	XG.2000.1206-4	71-55-6	1,1,1 Trichloroethane	ND	mg / Kg	1	0.005	10/16/00
X00398	XG.2000.1158-5	630-20-6	1,1,1,2 Tetrachloroethane	ND	mg / Kg	1	0.005	10/16/00
X00398	XG.2000.1206-4	630-20-6	1,1,1,2 Tetrachloroethane	ND	mg / Kg	1	0.005	10/16/
X00398	XG.2000.1158-5	79-00-5	1,1,2 Trichloroethane	ND	mg / Kg	1	0.005	10/16

Quality Control Summary

Client: CH2MHILL

ect: 0010162 KAFB

Explanation of codes

D *Not applicable due to sample dilution*

L *Not applicable due to MDL proximity*

X00398	XG.2000.1206-4	79-00-5	1,1,2 Trichloroethane	ND	mg / Kg	1	0.005	10/16/00
X00398	XG.2000.1158-5	79-34-5	1,1,2,2 Tetrachloroethane	ND	mg / Kg	1	0.005	10/16/00
X00398	XG.2000.1206-4	79-34-5	1,1,2,2 Tetrachloroethane	ND	mg / Kg	1	0.005	10/16/00
X00398	XG.2000.1158-5	106-93-4	1,2 Dibromoethane (EDB)	ND	mg / Kg	1	0.005	10/16/00
X00398	XG.2000.1206-4	106-93-4	1,2 Dibromoethane (EDB)	ND	mg / Kg	1	0.005	10/16/00
X00398	XG.2000.1158-5	95-50-1	1,2 Dichlorobenzene	ND	mg / Kg	1	0.005	10/16/00
X00398	XG.2000.1206-4	95-50-1	1,2 Dichlorobenzene	ND	mg / Kg	1	0.005	10/16/00
X00398	XG.2000.1158-5	107-06-2	1,2 Dichloroethane	ND	mg / Kg	1	0.005	10/16/00
X00398	XG.2000.1206-4	107-06-2	1,2 Dichloroethane	ND	mg / Kg	1	0.005	10/16/00
X00398	XG.2000.1158-5	78-87-5	1,2 Dichloropropane	ND	mg / Kg	1	0.005	10/16/00
X00398	XG.2000.1206-4	78-87-5	1,2 Dichloropropane	ND	mg / Kg	1	0.005	10/16/00
X00398	XG.2000.1158-5	96-18-4	1,2,3 Trichloropropane	ND	mg / Kg	1	0.005	10/16/00
X00398	XG.2000.1206-4	96-18-4	1,2,3 Trichloropropane	ND	mg / Kg	1	0.005	10/16/00
X00398	XG.2000.1158-5	95-63-6	1,2,4-Trimethylbenzene	ND	mg / Kg	1	0.005	10/16/00
X00398	XG.2000.1206-4	95-63-6	1,2,4-Trimethylbenzene	ND	mg / Kg	1	0.005	10/16/00
X00398	XG.2000.1158-5	541-73-1	1,3 Dichlorobenzene	ND	mg / Kg	1	0.005	10/16/00
X00398	XG.2000.1206-4	541-73-1	1,3 Dichlorobenzene	ND	mg / Kg	1	0.005	10/16/00
X00398	XG.2000.1158-5	108-67-8	1,3,5-Trimethylbenzene	ND	mg / Kg	1	0.005	10/16/00
X00398	XG.2000.1206-4	108-67-8	1,3,5-Trimethylbenzene	ND	mg / Kg	1	0.005	10/16/00
X00398	XG.2000.1158-5	764-41-0	1,4 Dichloro-2-butene	ND	mg / Kg	1	0.05	10/16/00
X00398	XG.2000.1206-4	764-41-0	1,4 Dichloro-2-butene	ND	mg / Kg	1	0.05	10/16/00
X00398	XG.2000.1158-5	106-46-7	1,4 Dichlorobenzene	ND	mg / Kg	1	0.005	10/16/00
X00398	XG.2000.1206-4	106-46-7	1,4 Dichlorobenzene	ND	mg / Kg	1	0.005	10/16/00
X00398	XG.2000.1158-5	78-93-3	2-Butanone (MEK)	ND	mg / Kg	1	0.025	10/16/00
X00398	XG.2000.1206-4	78-93-3	2-Butanone (MEK)	ND	mg / Kg	1	0.025	10/16/00
X00398	XG.2000.1158-5	110-75-8	2-Chloroethylvinylether	ND	mg / Kg	1	0.025	10/16/00
X00398	XG.2000.1206-4	110-75-8	2-Chloroethylvinylether	ND	mg / Kg	1	0.025	10/16/00
X00398	XG.2000.1158-5	591-78-6	2-Hexanone (MBK)	ND	mg / Kg	1	0.025	10/16/00
X00398	XG.2000.1206-4	591-78-6	2-Hexanone (MBK)	ND	mg / Kg	1	0.025	10/16/00
X00398	XG.2000.1158-5	108-10-1	4-Methyl-2-pentanone (MIBK)	ND	mg / Kg	1	0.025	10/16/00
X00398	XG.2000.1206-4	108-10-1	4-Methyl-2-pentanone (MIBK)	ND	mg / Kg	1	0.025	10/16/00
X00398	XG.2000.1158-5	67-64-1	Acetone	ND	mg / Kg	1	0.05	10/16/00
X00398	XG.2000.1206-4	67-64-1	Acetone	ND	mg / Kg	1	0.05	10/16/00
X00398	XG.2000.1158-5	107-02-8	Acrolein	ND	mg / Kg	1	0.1	10/16/00
X00398	XG.2000.1206-4	107-02-8	Acrolein	ND	mg / Kg	1	0.1	10/16/00
X00398	XG.2000.1158-5	107-13-1	Acrylonitrile	ND	mg / Kg	1	0.1	10/16/00
X00398	XG.2000.1206-4	107-13-1	Acrylonitrile	ND	mg / Kg	1	0.1	10/16/00
X00398	XG.2000.1158-5	71-43-2	Benzene	ND	mg / Kg	1	0.005	10/16/00
X00398	XG.2000.1206-4	71-43-2	Benzene	ND	mg / Kg	1	0.005	10/16/00
X00398	XG.2000.1158-5	75-27-4	Bromodichloromethane	ND	mg / Kg	1	0.005	10/16/00
X00398	XG.2000.1206-4	75-27-4	Bromodichloromethane	ND	mg / Kg	1	0.005	10/16/00
X00398	XG.2000.1158-5	75-25-2	Bromoform	ND	mg / Kg	1	0.005	10/16/00
X00398	XG.2000.1206-4	75-25-2	Bromoform	ND	mg / Kg	1	0.005	10/16/00
X00398	XG.2000.1158-5	74-83-9	Bromomethane	ND	mg / Kg	1	0.025	10/16/00
X00398	XG.2000.1206-4	74-83-9	Bromomethane	ND	mg / Kg	1	0.025	10/16/00
X00398	XG.2000.1158-5	75-15-0	Carbon disulfide	ND	mg / Kg	1	0.025	10/16/00
X00398	XG.2000.1206-4	75-15-0	Carbon disulfide	ND	mg / Kg	1	0.025	10/16/00
X00398	XG.2000.1158-5	56-23-5	Carbon tetrachloride	ND	mg / Kg	1	0.005	10/16/00
X00398	XG.2000.1206-4	56-23-5	Carbon tetrachloride	ND	mg / Kg	1	0.005	10/16/00
X00398	XG.2000.1158-5	108-90-7	Chlorobenzene	ND	mg / Kg	1	0.005	10/16/00
X00398	XG.2000.1206-4	108-90-7	Chlorobenzene	ND	mg / Kg	1	0.005	10/16/00

Quality Control Summary

Client: CH2MHILL

Project: 0010162 KAFB

Explanation of codes

D Not applicable due to sample dilutio

L Not applicable due to MDL proximi

X00398	XG.2000.1158-5	124-48-1	Chlorodibromomethane	ND	mg / Kg	1	0.005	10/16/00
X00398	XG.2000.1206-4	124-48-1	Chlorodibromomethane	ND	mg / Kg	1	0.005	10/16/00
X00398	XG.2000.1158-5	75-00-3	Chloroethane	ND	mg / Kg	1	0.025	10/16/00
X00398	XG.2000.1206-4	75-00-3	Chloroethane	ND	mg / Kg	1	0.025	10/16/00
X00398	XG.2000.1158-5	67-66-3	Chloroform	ND	mg / Kg	1	0.005	10/16/00
X00398	XG.2000.1206-4	67-66-3	Chloroform	ND	mg / Kg	1	0.005	10/16/00
X00398	XG.2000.1158-5	74-87-3	Chloromethane	ND	mg / Kg	1	0.025	10/16/00
X00398	XG.2000.1206-4	74-87-3	Chloromethane	ND	mg / Kg	1	0.025	10/16/00
X00398	XG.2000.1158-5	156-59-2	cis-1,2 dichloroethene	ND	mg / Kg	1	0.005	10/16/00
X00398	XG.2000.1206-4	156-59-2	cis-1,2 dichloroethene	ND	mg / Kg	1	0.005	10/16/00
X00398	XG.2000.1158-5	10061-01-5	cis-1,3 dichloropropene	ND	mg / Kg	1	0.005	10/16/00
X00398	XG.2000.1206-4	10061-01-5	cis-1,3 dichloropropene	ND	mg / Kg	1	0.005	10/16/00
X00398	XG.2000.1158-5	74-95-3	Dibromomethane	ND	mg / Kg	1	0.005	10/16/00
X00398	XG.2000.1206-4	74-95-3	Dibromomethane	ND	mg / Kg	1	0.005	10/16/00
X00398	XG.2000.1158-5	97-63-2	Ethyl methacrylate	ND	mg / Kg	1	0.025	10/16/00
X00398	XG.2000.1206-4	97-63-2	Ethyl methacrylate	ND	mg / Kg	1	0.025	10/16/00
X00398	XG.2000.1158-5	100-41-4	Ethylbenzene	ND	mg / Kg	1	0.005	10/16/00
X00398	XG.2000.1206-4	100-41-4	Ethylbenzene	ND	mg / Kg	1	0.005	10/16/00
X00398	XG.2000.1158-5		Freon 113	ND	mg / Kg	1	0.025	10/16/00
X00398	XG.2000.1206-4		Freon 113	ND	mg / Kg	1	0.025	10/16/00
X00398	XG.2000.1158-5	75-71-8	Freon 12	ND	mg / Kg	1	0.05	10/16/00
X00398	XG.2000.1206-4	75-71-8	Freon 12	ND	mg / Kg	1	0.05	10/16/00
X00398	XG.2000.1158-5	74-88-4	Iodomethane	ND	mg / Kg	1	0.025	10/16/00
X00398	XG.2000.1206-4	74-88-4	Iodomethane	ND	mg / Kg	1	0.025	10/16/0
X00398	XG.2000.1158-5	1634-04-4	Methyl t-butyl ether (MTBE)	ND	mg / Kg	1	0.005	10/16/
X00398	XG.2000.1206-4	1634-04-4	Methyl t-butyl ether (MTBE)	ND	mg / Kg	1	0.005	10/16/00
X00398	XG.2000.1158-5	75-09-2	Methylene chloride	ND	mg / Kg	1	0.05	10/16/00
X00398	XG.2000.1206-4	75-09-2	Methylene chloride	ND	mg / Kg	1	0.05	10/16/00
X00398	XG.2000.1158-5	91-20-3	Naphthalene	ND	mg / Kg	1	0.025	10/16/00
X00398	XG.2000.1206-4	91-20-3	Naphthalene	ND	mg / Kg	1	0.025	10/16/00
X00398	XG.2000.1158-5	95-47-6	o-Xylene	ND	mg / Kg	1	0.005	10/16/00
X00398	XG.2000.1206-4	95-47-6	o-Xylene	ND	mg / Kg	1	0.005	10/16/00
X00398	XG.2000.1158-5	108-38-3/106-42	p/m Xylenes	ND	mg / Kg	1	0.01	10/16/00
X00398	XG.2000.1206-4	108-38-3/106-42	p/m Xylenes	ND	mg / Kg	1	0.01	10/16/00
X00398	XG.2000.1158-5	100-42-5	Styrene	ND	mg / Kg	1	0.005	10/16/0(
X00398	XG.2000.1206-4	100-42-5	Styrene	ND	mg / Kg	1	0.005	10/16/0(
X00398	XG.2000.1158-5	156-60-5	t-1,2 Dichloroethene	ND	mg / Kg	1	0.005	10/16/0(
X00398	XG.2000.1206-4	156-60-5	t-1,2 Dichloroethene	ND	mg / Kg	1	0.005	10/16/0(
X00398	XG.2000.1158-5	10061-02-6	t-1,3 Dichloropropene	ND	mg / Kg	1	0.005	10/16/0(
X00398	XG.2000.1206-4	10061-02-6	t-1,3 Dichloropropene	ND	mg / Kg	1	0.005	10/16/0(
X00398	XG.2000.1158-5	127-18-4	Tetrachloroethene	ND	mg / Kg	1	0.005	10/16/0(
X00398	XG.2000.1206-4	127-18-4	Tetrachloroethene	ND	mg / Kg	1	0.005	10/16/0(
X00398	XG.2000.1158-5	108-88-3	Toluene	ND	mg / Kg	1	0.005	10/16/0(
X00398	XG.2000.1206-4	108-88-3	Toluene	ND	mg / Kg	1	0.005	10/16/0(
X00398	XG.2000.1158-5	79-01-6	Trichloroethene	ND	mg / Kg	1	0.005	10/16/0(
X00398	XG.2000.1206-4	79-01-6	Trichloroethene	ND	mg / Kg	1	0.005	10/16/0(
X00398	XG.2000.1158-5	75-69-4	Trichlorofluoromethane	ND	mg / Kg	1	0.025	10/16/0(
X00398	XG.2000.1206-4	75-69-4	Trichlorofluoromethane	ND	mg / Kg	1	0.025	10/16/0(
X00398	XG.2000.1158-5	108-05-4	Vinyl acetate	ND	mg / Kg	1	0.025	10/16/

Quality Control Summary

Explanation of codes

D	*Not applicable due to sample dilution*
L	*Not applicable due to MDL proximity*

Client: **CH2MHILL**

Project: **0010162 KAFB**

X00398	XG.2000.1206-4	108-05-4	Vinyl acetate	ND	mg / Kg	1	0.025		10/16/00
X00398	XG.2000.1158-5	75-01-4	Vinyl chloride	ND	mg / Kg	1	0.025		10/16/00
X00398	XG.2000.1206-4	75-01-4	Vinyl chloride	ND	mg / Kg	1	0.025		10/16/00
X00398-018		**SW846 8260A Purgeable VOCs by GC/MS**							
X00398	XG.2000.1158-12	75-34-3	1,1 Dichloroethane	ND	mg / Kg	1	0.005		10/17/00
X00398	XG.2000.1205-1	75-34-3	1,1 Dichloroethane	ND	mg / Kg	1	0.005		10/17/00
X00398	XG.2000.1206-7	75-34-3	1,1 Dichloroethane	ND	mg / Kg	1	0.005		10/17/00
X00398	XG.2000.1158-12	75-34-3	1,1 Dichloroethene	ND	mg / Kg	1	0.005		10/17/00
X00398	XG.2000.1205-1	75-34-3	1,1 Dichloroethene	ND	mg / Kg	1	0.005		10/17/00
X00398	XG.2000.1206-7	75-34-3	1,1 Dichloroethene	ND	mg / Kg	1	0.005		10/17/00
X00398	XG.2000.1158-12	71-55-6	1,1,1 Trichloroethane	ND	mg / Kg	1	0.005		10/17/00
X00398	XG.2000.1205-1	71-55-6	1,1,1 Trichloroethane	ND	mg / Kg	1	0.005		10/17/00
X00398	XG.2000.1206-7	71-55-6	1,1,1 Trichloroethane	ND	mg / Kg	1	0.005		10/17/00
X00398	XG.2000.1158-12	630-20-6	1,1,1,2 Tetrachloroethane	ND	mg / Kg	1	0.005		10/17/00
X00398	XG.2000.1205-1	630-20-6	1,1,1,2 Tetrachloroethane	ND	mg / Kg	1	0.005		10/17/00
X00398	XG.2000.1206-7	630-20-6	1,1,1,2 Tetrachloroethane	ND	mg / Kg	1	0.005		10/17/00
X00398	XG.2000.1158-12	79-00-5	1,1,2 Trichloroethane	ND	mg / Kg	1	0.005		10/17/00
X00398	XG.2000.1205-1	79-00-5	1,1,2 Trichloroethane	ND	mg / Kg	1	0.005		10/17/00
X00398	XG.2000.1206-7	79-00-5	1,1,2 Trichloroethane	ND	mg / Kg	1	0.005		10/17/00
X00398	XG.2000.1158-12	79-34-5	1,1,2,2 Tetrachloroethane	ND	mg / Kg	1	0.005		10/17/00
X00398	XG.2000.1205-1	79-34-5	1,1,2,2 Tetrachloroethane	ND	mg / Kg	1	0.005		10/17/00
X00398	XG.2000.1206-7	79-34-5	1,1,2,2 Tetrachloroethane	ND	mg / Kg	1	0.005		10/17/00
X00398	XG.2000.1158-12	106-93-4	1,2 Dibromoethane (EDB)	ND	mg / Kg	1	0.005		10/17/00
8	XG.2000.1205-1	106-93-4	1,2 Dibromoethane (EDB)	ND	mg / Kg	1	0.005		10/17/00
X00398	XG.2000.1206-7	106-93-4	1,2 Dibromoethane (EDB)	ND	mg / Kg	1	0.005		10/17/00
X00398	XG.2000.1158-12	95-50-1	1,2 Dichlorobenzene	ND	mg / Kg	1	0.005		10/17/00
X00398	XG.2000.1205-1	95-50-1	1,2 Dichlorobenzene	ND	mg / Kg	1	0.005		10/17/00
X00398	XG.2000.1206-7	95-50-1	1,2 Dichlorobenzene	ND	mg / Kg	1	0.005		10/17/00
X00398	XG.2000.1158-12	107-06-2	1,2 Dichloroethane	ND	mg / Kg	1	0.005		10/17/00
X00398	XG.2000.1205-1	107-06-2	1,2 Dichloroethane	ND	mg / Kg	1	0.005		10/17/00
X00398	XG.2000.1206-7	107-06-2	1,2 Dichloroethane	ND	mg / Kg	1	0.005		10/17/00
X00398	XG.2000.1158-12	78-87-5	1,2 Dichloropropane	ND	mg / Kg	1	0.005		10/17/00
X00398	XG.2000.1205-1	78-87-5	1,2 Dichloropropane	ND	mg / Kg	1	0.005		10/17/00
X00398	XG.2000.1206-7	78-87-5	1,2 Dichloropropane	ND	mg / Kg	1	0.005		10/17/00
X00398	XG.2000.1158-12	96-18-4	1,2,3 Trichloropropane	ND	mg / Kg	1	0.005		10/17/00
X00398	XG.2000.1205-1	96-18-4	1,2,3 Trichloropropane	ND	mg / Kg	1	0.005		10/17/00
X00398	XG.2000.1206-7	96-18-4	1,2,3 Trichloropropane	ND	mg / Kg	1	0.005		10/17/00
X00398	XG.2000.1158-12	95-63-6	1,2,4-Trimethylbenzene	ND	mg / Kg	1	0.005		10/17/00
X00398	XG.2000.1205-1	95-63-6	1,2,4-Trimethylbenzene	ND	mg / Kg	1	0.005		10/17/00
X00398	XG.2000.1206-7	95-63-6	1,2,4-Trimethylbenzene	ND	mg / Kg	1	0.005		10/17/00
X00398	XG.2000.1158-12	541-73-1	1,3 Dichlorobenzene	ND	mg / Kg	1	0.005		10/17/00
X00398	XG.2000.1205-1	541-73-1	1,3 Dichlorobenzene	ND	mg / Kg	1	0.005		10/17/00
X00398	XG.2000.1206-7	541-73-1	1,3 Dichlorobenzene	ND	mg / Kg	1	0.005		10/17/00
X00398	XG.2000.1158-12	108-67-8	1,3,5-Trimethylbenzene	ND	mg / Kg	1	0.005		10/17/00
X00398	XG.2000.1205-1	108-67-8	1,3,5-Trimethylbenzene	ND	mg / Kg	1	0.005		10/17/00
X00398	XG.2000.1206-7	108-67-8	1,3,5-Trimethylbenzene	ND	mg / Kg	1	0.005		10/17/00
X00398	XG.2000.1158-12	764-41-0	1,4 Dichloro-2-butene	ND	mg / Kg	1	0.05		10/17/00
X00398	XG.2000.1205-1	764-41-0	1,4 Dichloro-2-butene	ND	mg / Kg	1	0.05		10/17/00
398	XG.2000.1206-7	764-41-0	1,4 Dichloro-2-butene	ND	mg / Kg	1	0.05		10/17/00
.98	XG.2000.1158-12	106-46-7	1,4 Dichlorobenzene	ND	mg / Kg	1	0.005		10/17/00

Quality Control Summary

Client: **CH2MHILL**

Project: **0010162** **KAFB**

Explanation of codes

D *Not applicable due to sample dilu*

L *Not applicable due to MDL proxim*

X00398	XG.2000.1205-1	106-46-7	1,4 Dichlorobenzene	ND	mg / Kg	1	0.005	10/17/00
X00398	XG.2000.1206-7	106-46-7	1,4 Dichlorobenzene	ND	mg / Kg	1	0.005	10/17/00
X00398	XG.2000.1158-12	78-93-3	2-Butanone (MEK)	ND	mg / Kg	1	0.025	10/17/00
X00398	XG.2000.1205-1	78-93-3	2-Butanone (MEK)	ND	mg / Kg	1	0.025	10/17/00
X00398	XG.2000.1206-7	78-93-3	2-Butanone (MEK)	ND	mg / Kg	1	0.025	10/17/00
X00398	XG.2000.1158-12	110-75-8	2-Chloroethylvinylether	ND	mg / Kg	1	0.025	10/17/00
X00398	XG.2000.1205-1	110-75-8	2-Chloroethylvinylether	ND	mg / Kg	1	0.025	10/17/00
X00398	XG.2000.1206-7	110-75-8	2-Chloroethylvinylether	ND	mg / Kg	1	0.025	10/17/00
X00398	XG.2000.1158-12	591-78-6	2-Hexanone (MBK)	ND	mg / Kg	1	0.025	10/17/00
X00398	XG.2000.1205-1	591-78-6	2-Hexanone (MBK)	ND	mg / Kg	1	0.025	10/17/00
X00398	XG.2000.1206-7	591-78-6	2-Hexanone (MBK)	ND	mg / Kg	1	0.025	10/17/00
X00398	XG.2000.1158-12	108-10-1	4-Methyl-2-pentanone (MIBK)	ND	mg / Kg	1	0.025	10/17/00
X00398	XG.2000.1205-1	108-10-1	4-Methyl-2-pentanone (MIBK)	ND	mg / Kg	1	0.025	10/17/00
X00398	XG.2000.1206-7	108-10-1	4-Methyl-2-pentanone (MIBK)	ND	mg / Kg	1	0.025	10/17/00
X00398	XG.2000.1158-12	67-64-1	Acetone	ND	mg / Kg	1	0.05	10/17/00
X00398	XG.2000.1205-1	67-64-1	Acetone	ND	mg / Kg	1	0.05	10/17/00
X00398	XG.2000.1206-7	67-64-1	Acetone	ND	mg / Kg	1	0.05	10/17/00
X00398	XG.2000.1158-12	107-02-8	Acrolein	ND	mg / Kg	1	0.1	10/17/00
X00398	XG.2000.1205-1	107-02-8	Acrolein	ND	mg / Kg	1	0.1	10/17/00
X00398	XG.2000.1206-7	107-02-8	Acrolein	ND	mg / Kg	1	0.1	10/17/00
X00398	XG.2000.1158-12	107-13-1	Acrylonitrile	ND	mg / Kg	1	0.1	10/17/00
X00398	XG.2000.1205-1	107-13-1	Acrylonitrile	ND	mg / Kg	1	0.1	10/17/00
X00398	XG.2000.1206-7	107-13-1	Acrylonitrile	ND	mg / Kg	1	0.1	10/17/00
X00398	XG.2000.1158-12	71-43-2	Benzene	ND	mg / Kg	1	0.005	10/17
X00398	XG.2000.1205-1	71-43-2	Benzene	ND	mg / Kg	1	0.005	10/17
X00398	XG.2000.1206-7	71-43-2	Benzene	ND	mg / Kg	1	0.005	10/17/00
X00398	XG.2000.1158-12	75-27-4	Bromodichloromethane	ND	mg / Kg	1	0.005	10/17/00
X00398	XG.2000.1205-1	75-27-4	Bromodichloromethane	ND	mg / Kg	1	0.005	10/17/00
X00398	XG.2000.1206-7	75-27-4	Bromodichloromethane	ND	mg / Kg	1	0.005	10/17/00
X00398	XG.2000.1158-12	75-25-2	Bromoform	ND	mg / Kg	1	0.005	10/17/00
X00398	XG.2000.1205-1	75-25-2	Bromoform	ND	mg / Kg	1	0.005	10/17/00
X00398	XG.2000.1206-7	75-25-2	Bromoform	ND	mg / Kg	1	0.005	10/17/00
X00398	XG.2000.1158-12	74-83-9	Bromomethane	ND	mg / Kg	1	0.025	10/17/00
X00398	XG.2000.1205-1	74-83-9	Bromomethane	ND	mg / Kg	1	0.025	10/17/00
X00398	XG.2000.1206-7	74-83-9	Bromomethane	ND	mg / Kg	1	0.025	10/17/00
X00398	XG.2000.1158-12	75-15-0	Carbon disulfide	ND	mg / Kg	1	0.025	10/17/00
X00398	XG.2000.1205-1	75-15-0	Carbon disulfide	ND	mg / Kg	1	0.025	10/17/00
X00398	XG.2000.1206-7	75-15-0	Carbon disulfide	ND	mg / Kg	1	0.025	10/17/00
X00398	XG.2000.1158-12	56-23-5	Carbon tetrachloride	ND	mg / Kg	1	0.005	10/17/00
X00398	XG.2000.1205-1	56-23-5	Carbon tetrachloride	ND	mg / Kg	1	0.005	10/17/00
X00398	XG.2000.1206-7	56-23-5	Carbon tetrachloride	ND	mg / Kg	1	0.005	10/17/00
X00398	XG.2000.1158-12	108-90-7	Chlorobenzene	ND	mg / Kg	1	0.005	10/17/00
X00398	XG.2000.1205-1	108-90-7	Chlorobenzene	ND	mg / Kg	1	0.005	10/17/00
X00398	XG.2000.1206-7	108-90-7	Chlorobenzene	ND	mg / Kg	1	0.005	10/17/00
X00398	XG.2000.1158-12	124-48-1	Chlorodibromomethane	ND	mg / Kg	1	0.005	10/17/00
X00398	XG.2000.1205-1	124-48-1	Chlorodibromomethane	ND	mg / Kg	1	0.005	10/17/00
X00398	XG.2000.1206-7	124-48-1	Chlorodibromomethane	ND	mg / Kg	1	0.005	10/17/00
X00398	XG.2000.1158-12	75-00-3	Chloroethane	ND	mg / Kg	1	0.025	10/17/00
X00398	XG.2000.1205-1	75-00-3	Chloroethane	ND	mg / Kg	1	0.025	10/17/00
X00398	XG.2000.1206-7	75-00-3	Chloroethane	ND	mg / Kg	1	0.025	10/17
X00398	XG.2000.1158-12	67-66-3	Chloroform	ND	mg / Kg	1	0.005	10/17

Quality Control Summary

Explanation of codes

D *Not applicable due to sample dilution*
L *Not applicable due to MDL proximity*

Client: CH2MHILL
Project: 0010162 KAFB

X00398	XG.2000.1205-1	67-66-3	Chloroform	ND	mg / Kg	1	0.005	10/17/00
X00398	XG.2000.1206-7	67-66-3	Chloroform	ND	mg / Kg	1	0.005	10/17/00
X00398	XG.2000.1158-12	74-87-3	Chloromethane	ND	mg / Kg	1	0.025	10/17/00
X00398	XG.2000.1205-1	74-87-3	Chloromethane	ND	mg / Kg	1	0.025	10/17/00
X00398	XG.2000.1206-7	74-87-3	Chloromethane	ND	mg / Kg	1	0.025	10/17/00
X00398	XG.2000.1158-12	156-59-2	cis-1,2 dichloroethene	ND	mg / Kg	1	0.005	10/17/00
X00398	XG.2000.1205-1	156-59-2	cis-1,2 dichloroethene	ND	mg / Kg	1	0.005	10/17/00
X00398	XG.2000.1206-7	156-59-2	cis-1,2 dichloroethene	ND	mg / Kg	1	0.005	10/17/00
X00398	XG.2000.1158-12	10061-01-5	cis-1,3 dichloropropene	ND	mg / Kg	1	0.005	10/17/00
X00398	XG.2000.1205-1	10061-01-5	cis-1,3 dichloropropene	ND	mg / Kg	1	0.005	10/17/00
X00398	XG.2000.1206-7	10061-01-5	cis-1,3 dichloropropene	ND	mg / Kg	1	0.005	10/17/00
X00398	XG.2000.1158-12	74-95-3	Dibromomethane	ND	mg / Kg	1	0.005	10/17/00
X00398	XG.2000.1205-1	74-95-3	Dibromomethane	ND	mg / Kg	1	0.005	10/17/00
X00398	XG.2000.1206-7	74-95-3	Dibromomethane	ND	mg / Kg	1	0.005	10/17/00
X00398	XG.2000.1158-12	97-63-2	Ethyl methacrylate	ND	mg / Kg	1	0.025	10/17/00
X00398	XG.2000.1205-1	97-63-2	Ethyl methacrylate	ND	mg / Kg	1	0.025	10/17/00
X00398	XG.2000.1206-7	97-63-2	Ethyl methacrylate	ND	mg / Kg	1	0.025	10/17/00
X00398	XG.2000.1158-12	100-41-4	Ethylbenzene	ND	mg / Kg	1	0.005	10/17/00
X00398	XG.2000.1205-1	100-41-4	Ethylbenzene	ND	mg / Kg	1	0.005	10/17/00
X00398	XG.2000.1206-7	100-41-4	Ethylbenzene	ND	mg / Kg	1	0.005	10/17/00
X00398	XG.2000.1158-12		Freon 113	ND	mg / Kg	1	0.025	10/17/00
X00398	XG.2000.1205-1		Freon 113	ND	mg / Kg	1	0.025	10/17/00
X00398	XG.2000.1206-7		Freon 113	ND	mg / Kg	1	0.025	10/17/00
X00398	XG.2000.1158-12	75-71-8	Freon 12	ND	mg / Kg	1	0.05	10/17/00
X00398	XG.2000.1205-1	75-71-8	Freon 12	ND	mg / Kg	1	0.05	10/17/00
X00398	XG.2000.1206-7	75-71-8	Freon 12	ND	mg / Kg	1	0.05	10/17/00
X00398	XG.2000.1158-12	74-88-4	Iodomethane	ND	mg / Kg	1	0.025	10/17/00
X00398	XG.2000.1205-1	74-88-4	Iodomethane	ND	mg / Kg	1	0.025	10/17/00
X00398	XG.2000.1206-7	74-88-4	Iodomethane	ND	mg / Kg	1	0.025	10/17/00
X00398	XG.2000.1158-12	1634-04-4	Methyl t-butyl ether (MTBE)	ND	mg / Kg	1	0.005	10/17/00
X00398	XG.2000.1205-1	1634-04-4	Methyl t-butyl ether (MTBE)	ND	mg / Kg	1	0.005	10/17/00
X00398	XG.2000.1206-7	1634-04-4	Methyl t-butyl ether (MTBE)	ND	mg / Kg	1	0.005	10/17/00
X00398	XG.2000.1158-12	75-09-2	Methylene chloride	ND	mg / Kg	1	0.05	10/17/00
X00398	XG.2000.1205-1	75-09-2	Methylene chloride	ND	mg / Kg	1	0.05	10/17/00
X00398	XG.2000.1206-7	75-09-2	Methylene chloride	ND	mg / Kg	1	0.05	10/17/00
X00398	XG.2000.1158-12	91-20-3	Naphthalene	ND	mg / Kg	1	0.025	10/17/00
X00398	XG.2000.1205-1	91-20-3	Naphthalene	ND	mg / Kg	1	0.025	10/17/00
X00398	XG.2000.1206-7	91-20-3	Naphthalene	ND	mg / Kg	1	0.025	10/17/00
X00398	XG.2000.1158-12	95-47-6	o-Xylene	ND	mg / Kg	1	0.005	10/17/00
X00398	XG.2000.1205-1	95-47-6	o-Xylene	ND	mg / Kg	1	0.005	10/17/00
X00398	XG.2000.1206-7	95-47-6	o-Xylene	ND	mg / Kg	1	0.005	10/17/00
X00398	XG.2000.1158-12	108-38-3/106-42	p/m Xylenes	ND	mg / Kg	1	0.01	10/17/00
X00398	XG.2000.1205-1	108-38-3/106-42	p/m Xylenes	ND	mg / Kg	1	0.01	10/17/00
X00398	XG.2000.1206-7	108-38-3/106-42	p/m Xylenes	ND	mg / Kg	1	0.01	10/17/00
X00398	XG.2000.1158-12	100-42-5	Styrene	ND	mg / Kg	1	0.005	10/17/00
X00398	XG.2000.1205-1	100-42-5	Styrene	ND	mg / Kg	1	0.005	10/17/00
X00398	XG.2000.1206-7	100-42-5	Styrene	ND	mg / Kg	1	0.005	10/17/00
X00398	XG.2000.1158-12	156-60-5	t-1,2 Dichloroethene	ND	mg / Kg	1	0.005	10/17/00
X00398	XG.2000.1205-1	156-60-5	t-1,2 Dichloroethene	ND	mg / Kg	1	0.005	10/17/00

Quality Control Summary

Client: **CH2MHILL**

Project: **0010162** **KAFB**

Explanation of codes

D *Not applicable due to sample dilut*

L *Not applicable due to MDL proxim*

X00398	XG.2000.1206-7	156-60-5	t-1,2 Dichloroethene	ND	mg / Kg	1	0.005	10/17/00
X00398	XG.2000.1158-12	10061-02-6	t-1,3 Dichloropropene	ND	mg / Kg	1	0.005	10/17/00
X00398	XG.2000.1205-1	10061-02-6	t-1,3 Dichloropropene	ND	mg / Kg	1	0.005	10/17/00
X00398	XG.2000.1206-7	10061-02-6	t-1,3 Dichloropropene	ND	mg / Kg	1	0.005	10/17/00
X00398	XG.2000.1158-12	127-18-4	Tetrachloroethene	ND	mg / Kg	1	0.005	10/17/00
X00398	XG.2000.1205-1	127-18-4	Tetrachloroethene	ND	mg / Kg	1	0.005	10/17/00
X00398	XG.2000.1206-7	127-18-4	Tetrachloroethene	ND	mg / Kg	1	0.005	10/17/00
X00398	XG.2000.1158-12	108-88-3	Toluene	ND	mg / Kg	1	0.005	10/17/00
X00398	XG.2000.1205-1	108-88-3	Toluene	ND	mg / Kg	1	0.005	10/17/00
X00398	XG.2000.1206-7	108-88-3	Toluene	ND	mg / Kg	1	0.005	10/17/00
X00398	XG.2000.1158-12	79-01-6	Trichloroethene	ND	mg / Kg	1	0.005	10/17/00
X00398	XG.2000.1205-1	79-01-6	Trichloroethene	ND	mg / Kg	1	0.005	10/17/00
X00398	XG.2000.1206-7	79-01-6	Trichloroethene	ND	mg / Kg	1	0.005	10/17/00
X00398	XG.2000.1158-12	75-69-4	Trichlorofluoromethane	ND	mg / Kg	1	0.025	10/17/00
X00398	XG.2000.1205-1	75-69-4	Trichlorofluoromethane	ND	mg / Kg	1	0.025	10/17/00
X00398	XG.2000.1206-7	75-69-4	Trichlorofluoromethane	ND	mg / Kg	1	0.025	10/17/00
X00398	XG.2000.1158-12	108-05-4	Vinyl acetate	ND	mg / Kg	1	0.025	10/17/00
X00398	XG.2000.1205-1	108-05-4	Vinyl acetate	ND	mg / Kg	1	0.025	10/17/00
X00398	XG.2000.1206-7	108-05-4	Vinyl acetate	ND	mg / Kg	1	0.025	10/17/00
X00398	XG.2000.1158-12	75-01-4	Vinyl chloride	ND	mg / Kg	1	0.025	10/17/00
X00398	XG.2000.1205-1	75-01-4	Vinyl chloride	ND	mg / Kg	1	0.025	10/17/00
X00398	XG.2000.1206-7	75-01-4	Vinyl chloride	ND	mg / Kg	1	0.025	10/17/00
X00398-028		**SW846 8260A Purgeable VOCs by GC/MS**						
X00398	XG.2000.1205-3	75-34-3	1,1 Dichloroethane	ND	mg / Kg	1	0.005	10/26
X00398	XG.2000.1206-9	75-34-3	1,1 Dichloroethane	ND	mg / Kg	1	0.005	10/26/00
X00398	XG.2000.1205-3	75-34-3	1,1 Dichloroethene	ND	mg / Kg	1	0.005	10/26/00
X00398	XG.2000.1206-9	75-34-3	1,1 Dichloroethene	ND	mg / Kg	1	0.005	10/26/00
X00398	XG.2000.1205-3	71-55-6	1,1,1 Trichloroethane	ND	mg / Kg	1	0.005	10/26/00
X00398	XG.2000.1206-9	71-55-6	1,1,1 Trichloroethane	ND	mg / Kg	1	0.005	10/26/00
X00398	XG.2000.1205-3	630-20-6	1,1,1,2 Tetrachloroethane	ND	mg / Kg	1	0.005	10/26/00
X00398	XG.2000.1206-9	630-20-6	1,1,1,2 Tetrachloroethane	ND	mg / Kg	1	0.005	10/26/00
X00398	XG.2000.1205-3	79-00-5	1,1,2 Trichloroethane	ND	mg / Kg	1	0.005	10/26/00
X00398	XG.2000.1206-9	79-00-5	1,1,2 Trichloroethane	ND	mg / Kg	1	0.005	10/26/00
X00398	XG.2000.1205-3	79-34-5	1,1,2,2 Tetrachloroethane	ND	mg / Kg	1	0.005	10/26/00
X00398	XG.2000.1206-9	79-34-5	1,1,2,2 Tetrachloroethane	ND	mg / Kg	1	0.005	10/26/00
X00398	XG.2000.1205-3	106-93-4	1,2 Dibromoethane (EDB)	ND	mg / Kg	1	0.005	10/26/00
X00398	XG.2000.1206-9	106-93-4	1,2 Dibromoethane (EDB)	ND	mg / Kg	1	0.005	10/26/00
X00398	XG.2000.1205-3	95-50-1	1,2 Dichlorobenzene	ND	mg / Kg	1	0.005	10/26/00
X00398	XG.2000.1206-9	95-50-1	1,2 Dichlorobenzene	ND	mg / Kg	1	0.005	10/26/00
X00398	XG.2000.1205-3	107-06-2	1,2 Dichloroethane	ND	mg / Kg	1	0.005	10/26/00
X00398	XG.2000.1206-9	107-06-2	1,2 Dichloroethane	ND	mg / Kg	1	0.005	10/26/00
X00398	XG.2000.1205-3	78-87-5	1,2 Dichloropropane	ND	mg / Kg	1	0.005	10/26/00
X00398	XG.2000.1206-9	78-87-5	1,2 Dichloropropane	ND	mg / Kg	1	0.005	10/26/00
X00398	XG.2000.1205-3	96-18-4	1,2,3 Trichloropropane	ND	mg / Kg	1	0.005	10/26/00
X00398	XG.2000.1206-9	96-18-4	1,2,3 Trichloropropane	ND	mg / Kg	1	0.005	10/26/00
X00398	XG.2000.1205-3	95-63-6	1,2,4-Trimethylbenzene	ND	mg / Kg	1	0.005	10/26/00
X00398	XG.2000.1206-9	95-63-6	1,2,4-Trimethylbenzene	ND	mg / Kg	1	0.005	10/26/00
X00398	XG.2000.1205-3	541-73-1	1,3 Dichlorobenzene	ND	mg / Kg	1	0.005	10/26/00
X00398	XG.2000.1206-9	541-73-1	1,3 Dichlorobenzene	ND	mg / Kg	1	0.005	10/26/
X00398	XG.2000.1205-3	108-67-8	1,3,5-Trimethylbenzene	ND	mg / Kg	1	0.005	10/26

Quality Control Summary

Explanation of codes

D *Not applicable due to sample dilution*
L *Not applicable due to MDL proximity*

Client: CH2MHILL
Project: 0010162 KAFB

X00398	XG.2000.1206-9	108-67-8	1,3,5-Trimethylbenzene	ND	mg / Kg	1	0.005	10/26/00
X00398	XG.2000.1205-3	764-41-0	1,4 Dichloro-2-butene	ND	mg / Kg	1	0.05	10/26/00
X00398	XG.2000.1206-9	764-41-0	1,4 Dichloro-2-butene	ND	mg / Kg	1	0.05	10/26/00
X00398	XG.2000.1205-3	106-46-7	1,4 Dichlorobenzene	ND	mg / Kg	1	0.005	10/26/00
X00398	XG.2000.1206-9	106-46-7	1,4 Dichlorobenzene	ND	mg / Kg	1	0.005	10/26/00
X00398	XG.2000.1205-3	78-93-3	2-Butanone (MEK)	ND	mg / Kg	1	0.025	10/26/00
X00398	XG.2000.1206-9	78-93-3	2-Butanone (MEK)	ND	mg / Kg	1	0.025	10/26/00
X00398	XG.2000.1205-3	110-75-8	2-Chloroethylvinylether	ND	mg / Kg	1	0.025	10/26/00
X00398	XG.2000.1206-9	110-75-8	2-Chloroethylvinylether	ND	mg / Kg	1	0.025	10/26/00
X00398	XG.2000.1205-3	591-78-6	2-Hexanone (MBK)	ND	mg / Kg	1	0.025	10/26/00
X00398	XG.2000.1206-9	591-78-6	2-Hexanone (MBK)	ND	mg / Kg	1	0.025	10/26/00
X00398	XG.2000.1205-3	108-10-1	4-Methyl-2-pentanone (MIBK)	ND	mg / Kg	1	0.025	10/26/00
X00398	XG.2000.1206-9	108-10-1	4-Methyl-2-pentanone (MIBK)	ND	mg / Kg	1	0.025	10/26/00
X00398	XG.2000.1205-3	67-64-1	Acetone	ND	mg / Kg	1	0.05	10/26/00
X00398	XG.2000.1206-9	67-64-1	Acetone	ND	mg / Kg	1	0.05	10/26/00
X00398	XG.2000.1205-3	107-02-8	Acrolein	ND	mg / Kg	1	0.1	10/26/00
X00398	XG.2000.1206-9	107-02-8	Acrolein	ND	mg / Kg	1	0.1	10/26/00
X00398	XG.2000.1205-3	107-13-1	Acrylonitrile	ND	mg / Kg	1	0.1	10/26/00
X00398	XG.2000.1206-9	107-13-1	Acrylonitrile	ND	mg / Kg	1	0.1	10/26/00
X00398	XG.2000.1205-3	71-43-2	Benzene	ND	mg / Kg	1	0.005	10/26/00
X00398	XG.2000.1206-9	71-43-2	Benzene	ND	mg / Kg	1	0.005	10/26/00
X00398	XG.2000.1205-3	75-27-4	Bromodichloromethane	ND	mg / Kg	1	0.005	10/26/00
X00398	XG.2000.1206-9	75-27-4	Bromodichloromethane	ND	mg / Kg	1	0.005	10/26/00
8	XG.2000.1205-3	75-25-2	Bromoform	ND	mg / Kg	1	0.005	10/26/00
98	XG.2000.1206-9	75-25-2	Bromoform	ND	mg / Kg	1	0.005	10/26/00
X00398	XG.2000.1205-3	74-83-9	Bromomethane	ND	mg / Kg	1	0.025	10/26/00
X00398	XG.2000.1206-9	74-83-9	Bromomethane	ND	mg / Kg	1	0.025	10/26/00
X00398	XG.2000.1205-3	75-15-0	Carbon disulfide	ND	mg / Kg	1	0.025	10/26/00
X00398	XG.2000.1206-9	75-15-0	Carbon disulfide	ND	mg / Kg	1	0.025	10/26/00
X00398	XG.2000.1205-3	56-23-5	Carbon tetrachloride	ND	mg / Kg	1	0.005	10/26/00
X00398	XG.2000.1206-9	56-23-5	Carbon tetrachloride	ND	mg / Kg	1	0.005	10/26/00
X00398	XG.2000.1205-3	108-90-7	Chlorobenzene	ND	mg / Kg	1	0.005	10/26/00
X00398	XG.2000.1206-9	108-90-7	Chlorobenzene	ND	mg / Kg	1	0.005	10/26/00
X00398	XG.2000.1205-3	124-48-1	Chlorodibromomethane	ND	mg / Kg	1	0.005	10/26/00
X00398	XG.2000.1206-9	124-48-1	Chlorodibromomethane	ND	mg / Kg	1	0.005	10/26/00
X00398	XG.2000.1205-3	75-00-3	Chloroethane	ND	mg / Kg	1	0.025	10/26/00
X00398	XG.2000.1206-9	75-00-3	Chloroethane	ND	mg / Kg	1	0.025	10/26/00
X00398	XG.2000.1205-3	67-66-3	Chloroform	ND	mg / Kg	1	0.005	10/26/00
X00398	XG.2000.1206-9	67-66-3	Chloroform	ND	mg / Kg	1	0.005	10/26/00
X00398	XG.2000.1205-3	74-87-3	Chloromethane	ND	mg / Kg	1	0.025	10/26/00
X00398	XG.2000.1206-9	74-87-3	Chloromethane	ND	mg / Kg	1	0.025	10/26/00
X00398	XG.2000.1205-3	156-59-2	cis-1,2 dichloroethene	ND	mg / Kg	1	0.005	10/26/00
X00398	XG.2000.1206-9	156-59-2	cis-1,2 dichloroethene	ND	mg / Kg	1	0.005	10/26/00
X00398	XG.2000.1205-3	10061-01-5	cis-1,3 dichloropropene	ND	mg / Kg	1	0.005	10/26/00
X00398	XG.2000.1206-9	10061-01-5	cis-1,3 dichloropropene	ND	mg / Kg	1	0.005	10/26/00
X00398	XG.2000.1205-3	74-95-3	Dibromomethane	ND	mg / Kg	1	0.005	10/26/00
X00398	XG.2000.1206-9	74-95-3	Dibromomethane	ND	mg / Kg	1	0.005	10/26/00
X00398	XG.2000.1205-3	97-63-2	Ethyl methacrylate	ND	mg / Kg	1	0.025	10/26/00
X00398	XG.2000.1206-9	97-63-2	Ethyl methacrylate	ND	mg / Kg	1	0.025	10/26/00
98	XG.2000.1205-3	100-41-4	Ethylbenzene	ND	mg / Kg	1	0.005	10/26/00
X00398	XG.2000.1206-9	100-41-4	Ethylbenzene	ND	mg / Kg	1	0.005	10/26/00

Quality Control Summary

Client: **CH2MHILL**

Project: **0010162** **KAFB**

Explanation of codes

D *Not applicable due to sample dilut*

L *Not applicable due to MDL proxim*

X00398	XG.2000.1205-3		Freon 113	ND	mg / Kg	1	0.025	10/26/0
X00398	XG.2000.1206-9		Freon 113	ND	mg / Kg	1	0.025	10/26/0
X00398	XG.2000.1205-3	75-71-8	Freon 12	ND	mg / Kg	1	0.05	10/26/0
X00398	XG.2000.1206-9	75-71-8	Freon 12	ND	mg / Kg	1	0.05	10/26/0
X00398	XG.2000.1205-3	74-88-4	Iodomethane	ND	mg / Kg	1	0.025	10/26/0
X00398	XG.2000.1206-9	74-88-4	Iodomethane	ND	mg / Kg	1	0.025	10/26/0
X00398	XG.2000.1205-3	1634-04-4	Methyl t-butyl ether (MTBE)	ND	mg / Kg	1	0.005	10/26/0
X00398	XG.2000.1206-9	1634-04-4	Methyl t-butyl ether (MTBE)	ND	mg / Kg	1	0.005	10/26/0
X00398	XG.2000.1205-3	75-09-2	Methylene chloride	ND	mg / Kg	1	0.05	10/26/0
X00398	XG.2000.1206-9	75-09-2	Methylene chloride	ND	mg / Kg	1	0.05	10/26/0
X00398	XG.2000.1205-3	91-20-3	Naphthalene	ND	mg / Kg	1	0.025	10/26/0
X00398	XG.2000.1206-9	91-20-3	Naphthalene	ND	mg / Kg	1	0.025	10/26/0
X00398	XG.2000.1205-3	95-47-6	o-Xylene	ND	mg / Kg	1	0.005	10/26/0
X00398	XG.2000.1206-9	95-47-6	o-Xylene	ND	mg / Kg	1	0.005	10/26/0
X00398	XG.2000.1205-3	108-38-3/106-42	p/m Xylenes	ND	mg / Kg	1	0.01	10/26/0
X00398	XG.2000.1206-9	108-38-3/106-42	p/m Xylenes	ND	mg / Kg	1	0.01	10/26/0
X00398	XG.2000.1205-3	100-42-5	Styrene	ND	mg / Kg	1	0.005	10/26/0
X00398	XG.2000.1206-9	100-42-5	Styrene	ND	mg / Kg	1	0.005	10/26/0
X00398	XG.2000.1205-3	156-60-5	t-1,2 Dichloroethene	ND	mg / Kg	1	0.005	10/26/0
X00398	XG.2000.1206-9	156-60-5	t-1,2 Dichloroethene	ND	mg / Kg	1	0.005	10/26/0
X00398	XG.2000.1205-3	10061-02-6	t-1,3 Dichloropropene	ND	mg / Kg	1	0.005	10/26/0
X00398	XG.2000.1206-9	10061-02-6	t-1,3 Dichloropropene	ND	mg / Kg	1	0.005	10/26/0
X00398	XG.2000.1205-3	127-18-4	Tetrachloroethene	ND	mg / Kg	1	0.005	10/26
X00398	XG.2000.1206-9	127-18-4	Tetrachloroethene	ND	mg / Kg	1	0.005	10/26
X00398	XG.2000.1205-3	108-88-3	Toluene	ND	mg / Kg	1	0.005	10/26/0
X00398	XG.2000.1206-9	108-88-3	Toluene	ND	mg / Kg	1	0.005	10/26/0
X00398	XG.2000.1205-3	79-01-6	Trichloroethene	ND	mg / Kg	1	0.005	10/26/0
X00398	XG.2000.1206-9	79-01-6	Trichloroethene	ND	mg / Kg	1	0.005	10/26/0
X00398	XG.2000.1205-3	75-69-4	Trichlorofluoromethane	ND	mg / Kg	1	0.025	10/26/0
X00398	XG.2000.1206-9	75-69-4	Trichlorofluoromethane	ND	mg / Kg	1	0.025	10/26/0
X00398	XG.2000.1205-3	108-05-4	Vinyl acetate	ND	mg / Kg	1	0.025	10/26/0
X00398	XG.2000.1206-9	108-05-4	Vinyl acetate	ND	mg / Kg	1	0.025	10/26/0
X00398	XG.2000.1205-3	75-01-4	Vinyl chloride	ND	mg / Kg	1	0.025	10/26/0
X00398	XG.2000.1206-9	75-01-4	Vinyl chloride	ND	mg / Kg	1	0.025	10/26/0
X00406-001		**SW846 3550A/8270B SVOCs by GC/MS**						
X00406	XG.2000.1171-1	120-82-1	1,2,4-Trichlorobenzene	ND	mg / Kg	1	0.03	10/17/0
X00406	XG.2000.1171-1	95-50-1	1,2-Dichlorobenzene	ND	mg / Kg	1	0.03	10/17/0
X00406	XG.2000.1171-1	541-73-1	1,3-Dichlorobenzene	ND	mg / Kg	1	0.03	10/17/0
X00406	XG.2000.1171-1	106-46-7	1,4-Dichlorobenzene	ND	mg / Kg	1	0.03	10/17/0
X00406	XG.2000.1171-1	90-12-0	1-Methylnaphthalene	ND	mg / Kg	1	0.03	10/17/0
X00406	XG.2000.1171-1	58-90-2	2,3,4,6-Tetrachlorophenol	ND	mg / Kg	1	1.5	10/17/0
X00406	XG.2000.1171-1	95-95-4	2,4,5-Trichlorophenol	ND	mg / Kg	1	0.3	10/17/0
X00406	XG.2000.1171-1	88-06-2	2,4,6-Trichlorophenol	ND	mg / Kg	1	0.3	10/17/0
X00406	XG.2000.1171-1	120-83-2	2,4-Dichlorophenol	ND	mg / Kg	1	0.3	10/17/0
X00406	XG.2000.1171-1	105-67-9	2,4-Dimethylphenol	ND	mg / Kg	1	0.03	10/17/0
X00406	XG.2000.1171-1	51-28-5	2,4-Dinitrophenol	ND	mg / Kg	1	0.67	10/17/0
X00406	XG.2000.1171-1	121-14-2	2,4-Dinitrotoluene	ND	mg / Kg	1	0.3	10/17/0
X00406	XG.2000.1171-1	606-20-2	2,6-Dinitrotoluene	ND	mg / Kg	1	0.3	10/17
X00406	XG.2000.1171-1	91-58-7	2-Chloronaphthalene	ND	mg / Kg	1	0.03	10/17

Quality Control Summary

Explanation of codes

D *Not applicable due to sample dilution*
L *Not applicable due to MDL proximity*

Client: **CH2MHILL**
Project: **0010162 KAFB**

X00406	XG.2000.1171-1	95-57-8	2-Chlorophenol	ND	mg / Kg	1	0.03	10/17/00
X00406	XG.2000.1171-1	91-57-6	2-Methylnaphthalene	ND	mg / Kg	1	0.03	10/17/00
X00406	XG.2000.1171-1	95-48-7	2-Methylphenol	ND	mg / Kg	1	0.03	10/17/00
X00406	XG.2000.1171-1	88-74-4	2-Nitroaniline	ND	mg / Kg	1	0.3	10/17/00
X00406	XG.2000.1171-1	88-75-5	2-Nitrophenol	ND	mg / Kg	1	0.3	10/17/00
X00406	XG.2000.1171-1		3+4 Methylphenol	ND	mg / Kg	1	0.03	10/17/00
X00406	XG.2000.1171-1	91-94-1	3,3-Dichlorobenzidine	ND	mg / Kg	1	0.3	10/17/00
X00406	XG.2000.1171-1	99-09-2	3-Nitroaniline	ND	mg / Kg	1	0.3	10/17/00
X00406	XG.2000.1171-1	534-52-1	4,6-Dinitro-2-methylphenol	ND	mg / Kg	1	0.3	10/17/00
X00406	XG.2000.1171-1	101-55-3	4-Bromophenyl-phenylether	ND	mg / Kg	1	0.03	10/17/00
X00406	XG.2000.1171-1	59-50-7	4-Chloro-3-methylphenol	ND	mg / Kg	1	0.3	10/17/00
X00406	XG.2000.1171-1	106-47-8	4-Chloroaniline	ND	mg / Kg	1	0.3	10/17/00
X00406	XG.2000.1171-1	7005-72-3	4-Chlorophenyl-phenylether	ND	mg / Kg	1	0.03	10/17/00
X00406	XG.2000.1171-1	100-01-6	4-Nitroaniline	ND	mg / Kg	1	0.3	10/17/00
X00406	XG.2000.1171-1	100-02-7	4-Nitrophenol	ND	mg / Kg	1	0.6	10/17/00
X00406	XG.2000.1171-1	83-32-9	Acenaphthene	ND	mg / Kg	1	0.03	10/17/00
X00406	XG.2000.1171-1	208-96-8	Acenaphthylene	ND	mg / Kg	1	0.03	10/17/00
X00406	XG.2000.1171-1	62-53-3	Aniline	ND	mg / Kg	1	0.3	10/17/00
X00406	XG.2000.1171-1	120-12-7	Anthracene	ND	mg / Kg	1	0.03	10/17/00
X00406	XG.2000.1171-1		Azobenzene&1,2-Diphenylhydrazine	ND	mg / Kg	1	0.03	10/17/00
X00406	XG.2000.1171-1	56-55-3	Benzo (a) anthracene	ND	mg / Kg	1	0.03	10/17/00
X00406	XG.2000.1171-1	50-32-8	Benzo(a)pyrene	ND	mg / Kg	1	0.03	10/17/00
[illegible]6	XG.2000.1171-1		Benzo(b & k)fluoranthene	ND	mg / Kg	1	0.03	10/17/00
[illegible]6	XG.2000.1171-1	191-24-2	Benzo(g,h,i)perylene	ND	mg / Kg	1	0.3	10/17/00
X00406	XG.2000.1171-1	64-85-0	Benzoic acid	ND	mg / Kg	1	3	10/17/00
X00406	XG.2000.1171-1	100-51-6	Benzyl alcohol	ND	mg / Kg	1	1.5	10/17/00
X00406	XG.2000.1171-1	111-44-4	bis (2-Chloroethyl) ether	ND	mg / Kg	1	0.03	10/17/00
X00406	XG.2000.1171-1	111-91-1	bis(2-Chloroethoxy)methane	ND	mg / Kg	1	0.03	10/17/00
X00406	XG.2000.1171-1	108-60-1	bis(2-Chloroisopropyl)ether	ND	mg / Kg	1	0.03	10/17/00
X00406	XG.2000.1171-1	117-81-7	bis(2-Ethylhexyl)phthalate	ND	mg / Kg	1	0.3	10/17/00
X00406	XG.2000.1171-1	85-68-7	Butylbenzylphthalate	ND	mg / Kg	1	0.03	10/17/00
X00406	XG.2000.1171-1	218-01-9	Chrysene	ND	mg / Kg	1	0.03	10/17/00
X00406	XG.2000.1171-1	84-74-2	di-n-Butylphthalate	ND	mg / Kg	1	0.3	10/17/00
X00406	XG.2000.1171-1	117-84-0	di-n-Octylpthalate	ND	mg / Kg	1	0.3	10/17/00
X00406	XG.2000.1171-1	53-70-3	Dibenz(a,h)anthracene	ND	mg / Kg	1	0.3	10/17/00
X00406	XG.2000.1171-1	132-64-9	Dibenzofuran	ND	mg / Kg	1	0.03	10/17/00
X00406	XG.2000.1171-1	84-66-2	Diethylphthalate	ND	mg / Kg	1	0.03	10/17/00
X00406	XG.2000.1171-1	131-11-3	Dimethylphthalate	ND	mg / Kg	1	0.03	10/17/00
X00406	XG.2000.1171-1	206-44-0	Fluoranthene	ND	mg / Kg	1	0.03	10/17/00
X00406	XG.2000.1171-1	86737	Fluorene	ND	mg / Kg	1	0.03	10/17/00
X00406	XG.2000.1171-1	118-74-1	Hexachlorobenzene	ND	mg / Kg	1	0.03	10/17/00
X00406	XG.2000.1171-1	87-68-3	Hexachlorobutadiene	ND	mg / Kg	1	0.03	10/17/00
X00406	XG.2000.1171-1	77-47-4	Hexachlorocyclopentadiene	ND	mg / Kg	1	1.5	10/17/00
X00406	XG.2000.1171-1	67-72-1	Hexachloroethane	ND	mg / Kg	1	0.03	10/17/00
X00406	XG.2000.1171-1	193-39-5	Indeno(1,2,3-cd)pyrene	ND	mg / Kg	1	0.3	10/17/00
X00406	XG.2000.1171-1	78-59-1	Isophorone	ND	mg / Kg	1	0.03	10/17/00
X00406	XG.2000.1171-1	621-64-7	n-Nitroso-di-n-propylamine	ND	mg / Kg	1	0.03	10/17/00
X00406	XG.2000.1171-1	62-75-9	n-Nitroso-dimethyl-amine	ND	mg / Kg	1	0.3	10/17/00
[illegible]6	XG.2000.1171-1	86-30-6	n-Nitrosodiphenylamine	ND	mg / Kg	1	0.03	10/17/00
[illegible]06	XG.2000.1171-1	91-20-3	Naphthalene	ND	mg / Kg	1	0.03	10/17/00

Quality Control Summary

Client: CH2MHILL

Project: 0010162 KAFB

Explanation of codes

D Not applicable due to sample dilutio

L Not applicable due to MDL proximi

X00406	XG.2000.1171-1	98-95-3	Nitrobenzene	ND	mg / Kg	1	0.03	10/17/00
X00406	XG.2000.1171-1	87-86-5	Pentachlorophenol	ND	mg / Kg	1	0.3	10/17/00
X00406	XG.2000.1171-1	85-01-8	Phenanthrene	ND	mg / Kg	1	0.03	10/17/00
X00406	XG.2000.1171-1	108-95-2	Phenol	ND	mg / Kg	1	0.3	10/17/00
X00406	XG.2000.1171-1	129-00-0	Pyrene	ND	mg / Kg	1	0.03	10/17/00
X00406	XG.2000.1171-1	110-86-1	Pyridine	ND	mg / Kg	1	0.3	10/17/00
X00406-010		**SW846 3550A/8270B SVOCs by GC/MS**						
X00406	XG.2000.1184-1	120-82-1	1,2,4-Trichlorobenzene	ND	mg / Kg	1	0.03	10/19/00
X00406	XG.2000.1184-1	95-50-1	1,2-Dichlorobenzene	ND	mg / Kg	1	0.03	10/19/00
X00406	XG.2000.1184-1	541-73-1	1,3-Dichlorobenzene	ND	mg / Kg	1	0.03	10/19/00
X00406	XG.2000.1184-1	106-46-7	1,4-Dichlorobenzene	ND	mg / Kg	1	0.03	10/19/00
X00406	XG.2000.1184-1	90-12-0	1-Methylnaphthalene	ND	mg / Kg	1	0.03	10/19/00
X00406	XG.2000.1184-1	58-90-2	2,3,4,6-Tetrachlorophenol	ND	mg / Kg	1	1.5	10/19/00
X00406	XG.2000.1184-1	95-95-4	2,4,5-Trichlorophenol	ND	mg / Kg	1	0.3	10/19/00
X00406	XG.2000.1184-1	88-06-2	2,4,6-Trichlorophenol	ND	mg / Kg	1	0.3	10/19/00
X00406	XG.2000.1184-1	120-83-2	2,4-Dichlorophenol	ND	mg / Kg	1	0.3	10/19/00
X00406	XG.2000.1184-1	105-67-9	2,4-Dimethylphenol	ND	mg / Kg	1	0.03	10/19/00
X00406	XG.2000.1184-1	51-28-5	2,4-Dinitrophenol	ND	mg / Kg	1	0.67	10/19/00
X00406	XG.2000.1184-1	121-14-2	2,4-Dinitrotoluene	ND	mg / Kg	1	0.3	10/19/00
X00406	XG.2000.1184-1	606-20-2	2,6-Dinitrotoluene	ND	mg / Kg	1	0.3	10/19/00
X00406	XG.2000.1184-1	91-58-7	2-Chloronaphthalene	ND	mg / Kg	1	0.03	10/19/00
X00406	XG.2000.1184-1	95-57-8	2-Chlorophenol	ND	mg / Kg	1	0.03	10/19/00
X00406	XG.2000.1184-1	91-57-6	2-Methylnaphthalene	ND	mg / Kg	1	0.03	10/19/00
X00406	XG.2000.1184-1	95-48-7	2-Methylphenol	ND	mg / Kg	1	0.03	10/19
X00406	XG.2000.1184-1	88-74-4	2-Nitroaniline	ND	mg / Kg	1	0.3	10/19/0
X00406	XG.2000.1184-1	88-75-5	2-Nitrophenol	ND	mg / Kg	1	0.3	10/19/00
X00406	XG.2000.1184-1		3+4 Methylphenol	ND	mg / Kg	1	0.03	10/19/00
X00406	XG.2000.1184-1	91-94-1	3,3-Dichlorobenzidine	ND	mg / Kg	1	0.3	10/19/00
X00406	XG.2000.1184-1	99-09-2	3-Nitroaniline	ND	mg / Kg	1	0.3	10/19/00
X00406	XG.2000.1184-1	534-52-1	4,6-Dinitro-2-methylphenol	ND	mg / Kg	1	0.3	10/19/00
X00406	XG.2000.1184-1	101-55-3	4-Bromophenyl-phenylether	ND	mg / Kg	1	0.03	10/19/00
X00406	XG.2000.1184-1	59-50-7	4-Chloro-3-methylphenol	ND	mg / Kg	1	0.3	10/19/00
X00406	XG.2000.1184-1	106-47-8	4-Chloroaniline	ND	mg / Kg	1	0.3	10/19/00
X00406	XG.2000.1184-1	7005-72-3	4-Chlorophenyl-phenylether	ND	mg / Kg	1	0.03	10/19/00
X00406	XG.2000.1184-1	100-01-6	4-Nitroaniline	ND	mg / Kg	1	0.3	10/19/00
X00406	XG.2000.1184-1	100-02-7	4-Nitrophenol	ND	mg / Kg	1	0.6	10/19/00
X00406	XG.2000.1184-1	83-32-9	Acenaphthene	ND	mg / Kg	1	0.03	10/19/00
X00406	XG.2000.1184-1	208-96-8	Acenaphthylene	ND	mg / Kg	1	0.03	10/19/00
X00406	XG.2000.1184-1	62-53-3	Aniline	ND	mg / Kg	1	0.3	10/19/00
X00406	XG.2000.1184-1	120-12-7	Anthracene	ND	mg / Kg	1	0.03	10/19/00
X00406	XG.2000.1184-1		Azobenzene&1,2-Diphenylhydrazine	ND	mg / Kg	1	0.03	10/19/00
X00406	XG.2000.1184-1	56-55-3	Benzo (a) anthracene	ND	mg / Kg	1	0.03	10/19/00
X00406	XG.2000.1184-1	50-32-8	Benzo(a)pyrene	ND	mg / Kg	1	0.03	10/19/00
X00406	XG.2000.1184-1		Benzo(b & k)fluoranthene	ND	mg / Kg	1	0.03	10/19/00
X00406	XG.2000.1184-1	191-24-2	Benzo(g,h,i)perylene	ND	mg / Kg	1	0.3	10/19/00
X00406	XG.2000.1184-1	64-85-0	Benzoic acid	ND	mg / Kg	1	3	10/19/00
X00406	XG.2000.1184-1	100-51-6	Benzyl alcohol	ND	mg / Kg	1	1.5	10/19/00
X00406	XG.2000.1184-1	111-44-4	bis (2-Chloroethyl) ether	ND	mg / Kg	1	0.03	10/19/00
X00406	XG.2000.1184-1	111-91-1	bis(2-Chloroethoxy)methane	ND	mg / Kg	1	0.03	10/19

Quality Control Summary

Explanation of codes

D	*Not applicable due to sample dilution*
L	*Not applicable due to MDL proximity*

Client: CH2MHILL

Project: 0010162 KAFB

X00406	XG.2000.1184-1	108-60-1	bis(2-Chloroisopropyl)ether	ND	mg / Kg	1	0.03	10/19/00
X00406	XG.2000.1184-1	117-81-7	bis(2-Ethylhexyl)phthalate	ND	mg / Kg	1	0.3	10/19/00
X00406	XG.2000.1184-1	85-68-7	Butylbenzylphthalate	ND	mg / Kg	1	0.03	10/19/00
X00406	XG.2000.1184-1	218-01-9	Chrysene	ND	mg / Kg	1	0.03	10/19/00
X00406	XG.2000.1184-1	84-74-2	di-n-Butylphthalate	ND	mg / Kg	1	0.3	10/19/00
X00406	XG.2000.1184-1	117-84-0	di-n-Octylpthalate	ND	mg / Kg	1	0.3	10/19/00
X00406	XG.2000.1184-1	53-70-3	Dibenz(a,h)anthracene	ND	mg / Kg	1	0.3	10/19/00
X00406	XG.2000.1184-1	132-64-9	Dibenzofuran	ND	mg / Kg	1	0.03	10/19/00
X00406	XG.2000.1184-1	84-66-2	Diethylphthalate	ND	mg / Kg	1	0.03	10/19/00
X00406	XG.2000.1184-1	131-11-3	Dimethylphthalate	ND	mg / Kg	1	0.03	10/19/00
X00406	XG.2000.1184-1	206-44-0	Fluoranthene	ND	mg / Kg	1	0.03	10/19/00
X00406	XG.2000.1184-1	86737	Fluorene	ND	mg / Kg	1	0.03	10/19/00
X00406	XG.2000.1184-1	118-74-1	Hexachlorobenzene	ND	mg / Kg	1	0.03	10/19/00
X00406	XG.2000.1184-1	87-68-3	Hexachlorobutadiene	ND	mg / Kg	1	0.03	10/19/00
X00406	XG.2000.1184-1	77-47-4	Hexachlorocyclopentadiene	ND	mg / Kg	1	1.5	10/19/00
X00406	XG.2000.1184-1	67-72-1	Hexachloroethane	ND	mg / Kg	1	0.03	10/19/00
X00406	XG.2000.1184-1	193-39-5	Indeno(1,2,3-cd)pyrene	ND	mg / Kg	1	0.3	10/19/00
X00406	XG.2000.1184-1	78-59-1	Isophorone	ND	mg / Kg	1	0.03	10/19/00
X00406	XG.2000.1184-1	621-64-7	n-Nitroso-di-n-propylamine	ND	mg / Kg	1	0.03	10/19/00
X00406	XG.2000.1184-1	62-75-9	n-Nitroso-dimethyl-amine	ND	mg / Kg	1	0.3	10/19/00
X00406	XG.2000.1184-1	86-30-6	n-Nitrosodiphenylamine	ND	mg / Kg	1	0.03	10/19/00
X00406	XG.2000.1184-1	91-20-3	Naphthalene	ND	mg / Kg	1	0.03	10/19/00
X00406	XG.2000.1184-1	98-95-3	Nitrobenzene	ND	mg / Kg	1	0.03	10/19/00
[illegible]6	XG.2000.1184-1	87-86-5	Pentachlorophenol	ND	mg / Kg	1	0.3	10/19/00
[illegible]06	XG.2000.1184-1	85-01-8	Phenanthrene	ND	mg / Kg	1	0.03	10/19/00
X00406	XG.2000.1184-1	108-95-2	Phenol	ND	mg / Kg	1	0.3	10/19/00
X00406	XG.2000.1184-1	129-00-0	Pyrene	ND	mg / Kg	1	0.03	10/19/00
X00406	XG.2000.1184-1	110-86-1	Pyridine	ND	mg / Kg	1	0.3	10/19/00
X00407-001		**SW846 ME/8015A Diesel Range Organics by GC/FID**						
X00407	XG.2000.1150-9		Diesel Range Organics	ND	mg / Kg	1	25	10/16/00
X00407-014		**SW846 ME/8015A Diesel Range Organics by GC/FID**						
X00407	XG.2000.1150-26		Diesel Range Organics	ND	mg / Kg	1	25	10/17/00
X00408-001		**SW846 5030A/8015A GRO by GC/FID**						
X00408	XG.2000.1155-1		Gasoline Range Organics	ND	mg / Kg	1	0.25	10/16/00
X00408-026		**SW846 5030A/8015A GRO by GC/FID**						
X00408	XG.2000.1161-1		Gasoline Range Organics	ND	mg / Kg	1	0.25	10/18/00
X00411-001		**SW846 5030A/8021B Purgeable VOCs by GC/PID**						
X00411	XG.2000.1164-8	108-38-3/106-42	p/m-Xylenes	ND	mg / Kg	1	0.01	10/18/00
X00411-004		**SW846 5030A/8021B Purgeable VOCs by GC/PID**						
X00411	XG.2000.1164-11	108-38-3/106-42	p/m-Xylenes	ND	mg / Kg	1	0.01	10/19/00
X00411-008		**SW846 5030A/8021B Purgeable VOCs by GC/PID**						
X00411	XG.2000.1177-1	108-38-3/106-42	p/m-Xylenes	ND	mg / Kg	1	0.01	10/23/00
X00411-011		**SW846 5030A/8021B Purgeable VOCs by GC/PID**						
[illegible]11	XG.2000.1224-1	108-38-3/106-42	p/m-Xylenes	ND	mg / Kg	1	0.01	10/31/00

Quality Control Summary

Client: **CH2MHILL**

Project: **0010162** **KAFB**

Explanation of codes

D *Not applicable due to sample dilut*

L *Not applicable due to MDL proximi*

X00411-021		**SW846 5030A/8021B Purgeable VOCs by GC/PID**						
X00411	XG.2000.1230-1	108-38-3/106-42	p/m-Xylenes	ND	mg / Kg	1	0.01	11/02/00

QC Type **MS: Matrix Spike** QC Matrix **SOLID**

QC Group	Run Sequence	CAS #	Analyte	Result	Units	Dilution Factor	Detection Limit	Code	Run Date
X00392-005		**SW846 5030A/8021B Purgeable VOCs by GC/PID**							
X00392	XG.2000.1112-5	71-43-2	Benzene	104	% Recovery	1	NA		10/05/00
X00392	XG.2000.1112-5	100-41-4	Ethylbenzene	104	% Recovery	1	NA		10/05/00
X00392	XG.2000.1112-5	95-47-6	o-Xylene	106	% Recovery	1	NA		10/05/00
X00392	XG.2000.1112-5	108-38-3/106-42	p/m-Xylenes	105	% Recovery	1	NA		10/05/00
X00392	XG.2000.1112-5	108-88-3	Toluene	103	% Recovery	1	NA		10/05/00
X00398-016		**SW846 8260A Purgeable VOCs by GC/MS**							
X00398	XG.2000.1158-10	75-34-3	1,1 Dichloroethene	123	% Recovery	1	NA		10/17/00
X00398	XG.2000.1206-5	75-34-3	1,1 Dichloroethene	123	% Recovery	1	NA		10/17/00
X00398	XG.2000.1158-10	106-46-7	1,4 Dichlorobenzene	103	% Recovery	1	NA		10/17/00
X00398	XG.2000.1206-5	106-46-7	1,4 Dichlorobenzene	103	% Recovery	1	NA		10/17/00
X00398	XG.2000.1158-10	71-43-2	Benzene	118	% Recovery	1	NA		10/17/00
X00398	XG.2000.1206-5	71-43-2	Benzene	118	% Recovery	1	NA		10/17
X00398	XG.2000.1158-10	108-90-7	Chlorobenzene	108	% Recovery	1	NA		10/17
X00398	XG.2000.1206-5	108-90-7	Chlorobenzene	108	% Recovery	1	NA		10/17/00
X00398	XG.2000.1158-10	108-88-3	Toluene	116	% Recovery	1	NA		10/17/00
X00398	XG.2000.1206-5	108-88-3	Toluene	116	% Recovery	1	NA		10/17/00
X00398	XG.2000.1158-10	79-01-6	Trichloroethene	113	% Recovery	1	NA		10/17/00
X00398	XG.2000.1206-5	79-01-6	Trichloroethene	113	% Recovery	1	NA		10/17/00
X00407-005		**SW846 ME/8015A Diesel Range Organics by GC/FID**							
X00407	XG.2000.1150-13		Diesel Range Organics	110	% Recovery	1	NA		10/17/00
X00408-023		**SW846 5030A/8015A GRO by GC/FID**							
X00408	XG.2000.1155-15		Gasoline Range Organics	90	% Recovery	1	NA		10/17/00
X00411-006		**SW846 5030A/8021B Purgeable VOCs by GC/PID**							
X00411	XG.2000.1164-13	108-38-3/106-42	p/m-Xylenes	105	% Recovery	1	NA		10/19/00

QC Type **MSD: Matrix Spike Duplicate Accuracy** QC Matrix **SOLID**

QC Group	Run Sequence	CAS #	Analyte	Result	Units	Dilution Factor	Detection Limit	Code	Run Date
X00392-006		**SW846 5030A/8021B Purgeable VOCs by GC/PID**							
X00392	XG.2000.1112-6	71-43-2	Benzene	100	% Recovery	1	NA		10/05/00
X00392	XG.2000.1112-6	100-41-4	Ethylbenzene	100	% Recovery	1	NA		10/05/00
X00392	XG.2000.1112-6	95-47-6	o-Xylene	103	% Recovery	1	NA		10/05/00
X00392	XG.2000.1112-6	108-38-3/106-42	p/m-Xylenes	101	% Recovery	1	NA		10/05

Quality Control Summary

Client: CH2MHILL

Project: 0010162 KAFB

Explanation of codes

D	*Not applicable due to sample dilution*
L	*Not applicable due to MDL proximity*

X00392	XG.2000.1112-6	108-88-3	Toluene	100	% Recovery	1	NA		10/05/00
X00398-017		**SW846 8260A Purgeable VOCs by GC/MS**							
X00398	XG.2000.1158-11	75-34-3	1,1 Dichloroethene	116	% Recovery	1	NA		10/17/00
X00398	XG.2000.1206-6	75-34-3	1,1 Dichloroethene	116	% Recovery	1	NA		10/17/00
X00398	XG.2000.1158-11	106-46-7	1,4 Dichlorobenzene	99	% Recovery	1	NA		10/17/00
X00398	XG.2000.1206-6	106-46-7	1,4 Dichlorobenzene	99	% Recovery	1	NA		10/17/00
X00398	XG.2000.1158-11	71-43-2	Benzene	110	% Recovery	1	NA		10/17/00
X00398	XG.2000.1206-6	71-43-2	Benzene	110	% Recovery	1	NA		10/17/00
X00398	XG.2000.1158-11	108-90-7	Chlorobenzene	105	% Recovery	1	NA		10/17/00
X00398	XG.2000.1206-6	108-90-7	Chlorobenzene	105	% Recovery	1	NA		10/17/00
X00398	XG.2000.1158-11	108-88-3	Toluene	110	% Recovery	1	NA		10/17/00
X00398	XG.2000.1206-6	108-88-3	Toluene	110	% Recovery	1	NA		10/17/00
X00398	XG.2000.1158-11	79-01-6	Trichloroethene	106	% Recovery	1	NA		10/17/00
X00398	XG.2000.1206-6	79-01-6	Trichloroethene	106	% Recovery	1	NA		10/17/00
X00407-006		**SW846 ME/8015A Diesel Range Organics by GC/FID**							
X00407	XG.2000.1150-14		Diesel Range Organics	108	% Recovery	1	NA		10/17/00
X00408-024		**SW846 5030A/8015A GRO by GC/FID**							
X00408	XG.2000.1155-16		Gasoline Range Organics	108	% Recovery	1	NA		10/17/00
X00411-007		**SW846 5030A/8021B Purgeable VOCs by GC/PID**							
X00411	XG.2000.1164-14	108-38-3/106-42	p/m-Xylenes	108	% Recovery	1	NA		10/19/00

QC Type **MSD: Matrix Spike Duplicate Precision** QC Matrix **SOLID**

QC Group	Run Sequence	CAS #	Analyte	Result	Units	Dilution Factor	Detection Limit	Code	Run Date
X00392-006		**SW846 5030A/8021B Purgeable VOCs by GC/PID**							
X00392	XG.2000.1112-6	71-43-2	Benzene	4	RPD	1	NA		10/05/00
X00392	XG.2000.1112-6	100-41-4	Ethylbenzene	4	RPD	1	NA		10/05/00
X00392	XG.2000.1112-6	95-47-6	o-Xylene	3	RPD	1	NA		10/05/00
X00392	XG.2000.1112-6	108-38-3/106-42	p/m-Xylenes	4	RPD	1	NA		10/05/00
X00392	XG.2000.1112-6	108-88-3	Toluene	4	RPD	1	NA		10/05/00
X00398-017		**SW846 8260A Purgeable VOCs by GC/MS**							
X00398	XG.2000.1158-11	75-34-3	1,1 Dichloroethene	6	RPD	1	NA		10/17/00
X00398	XG.2000.1206-6	75-34-3	1,1 Dichloroethene	6	RPD	1	NA		10/17/00
X00398	XG.2000.1158-11	106-46-7	1,4 Dichlorobenzene	4	RPD	1	NA		10/17/00
X00398	XG.2000.1206-6	106-46-7	1,4 Dichlorobenzene	4	RPD	1	NA		10/17/00
X00398	XG.2000.1158-11	71-43-2	Benzene	6	RPD	1	NA		10/17/00
X00398	XG.2000.1206-6	71-43-2	Benzene	6	RPD	1	NA		10/17/00
X00398	XG.2000.1158-11	108-90-7	Chlorobenzene	3	RPD	1	NA		10/17/00
X00398	XG.2000.1206-6	108-90-7	Chlorobenzene	3	RPD	1	NA		10/17/00
X00398	XG.2000.1158-11	108-88-3	Toluene	6	RPD	1	NA		10/17/00
X00398	XG.2000.1206-6	108-88-3	Toluene	6	RPD	1	NA		10/17/00
X00398	XG.2000.1158-11	79-01-6	Trichloroethene	6	RPD	1	NA		10/17/00
X00398	XG.2000.1206-6	79-01-6	Trichloroethene	6	RPD	1	NA		10/17/00

Quality Control Summary

Client: **CH2MHILL**

Project: **0010162** **KAFB**

Explanation of codes

D *Not applicable due to sample dilut*

L *Not applicable due to MDL proxim*

X00407-006		**SW846 ME/8015A Diesel Range Organics by GC/FID**							
X00407	XG.2000.1150-14		Diesel Range Organics	2	RPD	1	NA		10/17/0(
X00408-024		**SW846 5030A/8015A GRO by GC/FID**							
X00408	XG.2000.1155-16		Gasoline Range Organics	18	RPD	1	NA		10/17/0(
X00411-007		**SW846 5030A/8021B Purgeable VOCs by GC/PID**							
X00411	XG.2000.1164-14	108-38-3/106-42	p/m-Xylenes	3	RPD	1	NA		10/19/0(

Quality Control Summary

Client: CH2MHILL
Project: 0010162 KAFB

Explanation of codes

D Not applicable due to sample dilution
L Not applicable due to MDL proximity

QC Type: LCS: Lab Control Spike — QC Matrix: WATER

QC Group	Run Sequence	CAS #	Analyte	Result	Units	Dilution Factor	Detection Limit	Code	Run Date
X00404-002		**SW846 ME/8015A Diesel Range Organics by GC/FID**							
X00404	XG.2000.1139-18		Diesel Range Organics	109	% Recovery	1	NA		10/14/00
X00405-002		**SW846 5030A/8015A GRO by GC/FID**							
X00405	XG.2000.1141-11		Gasoline Range Organics	96	% Recovery	1	NA		10/16/00
X00410-008		**SW846 8260A Purgeable VOCs by GC/MS**							
X00410	XG.2000.1175-8	75-34-3	1,1 Dichloroethene	114	% Recovery	1	NA		10/18/00
X00410	XG.2000.1175-8	106-46-7	1,4 Dichlorobenzene	101	% Recovery	1	NA		10/18/00
X00410	XG.2000.1175-8	71-43-2	Benzene	113	% Recovery	1	NA		10/18/00
X00410	XG.2000.1175-8	108-90-7	Chlorobenzene	106	% Recovery	1	NA		10/18/00
X00410	XG.2000.1175-8	108-88-3	Toluene	113	% Recovery	1	NA		10/18/00
X00410	XG.2000.1175-8	79-01-6	Trichloroethene	106	% Recovery	1	NA		10/18/00

QC Type: LCSD: Lab Control Spike Duplicate Accuracy — QC Matrix: WATER

QC Group	Run Sequence	CAS #	Analyte	Result	Units	Dilution Factor	Detection Limit	Code	Run Date
X00404-003		**SW846 ME/8015A Diesel Range Organics by GC/FID**							
X00404	XG.2000.1139-19		Diesel Range Organics	109	% Recovery	1	NA		10/14/00
X00405-003		**SW846 5030A/8015A GRO by GC/FID**							
X00405	XG.2000.1141-12		Gasoline Range Organics	98	% Recovery	1	NA		10/16/00
X00410-009		**SW846 8260A Purgeable VOCs by GC/MS**							
X00410	XG.2000.1175-9	75-34-3	1,1 Dichloroethene	115	% Recovery	1	NA		10/18/00
X00410	XG.2000.1175-9	106-46-7	1,4 Dichlorobenzene	100	% Recovery	1	NA		10/18/00
X00410	XG.2000.1175-9	71-43-2	Benzene	115	% Recovery	1	NA		10/18/00
X00410	XG.2000.1175-9	108-90-7	Chlorobenzene	108	% Recovery	1	NA		10/18/00
X00410	XG.2000.1175-9	108-88-3	Toluene	113	% Recovery	1	NA		10/18/00
X00410	XG.2000.1175-9	79-01-6	Trichloroethene	107	% Recovery	1	NA		10/18/00

QC Type: LCSD: Lab Control Spike Duplicate Precision — QC Matrix: WATER

QC Group	Run Sequence	CAS #	Analyte	Result	Units	Dilution Factor	Detection Limit	Code	Run Date
X00404-003		**SW846 ME/8015A Diesel Range Organics by GC/FID**							
X00404	XG.2000.1139-19		Diesel Range Organics	< 1	RPD	1	NA		10/14/00
X00405-003		**SW846 5030A/8015A GRO by GC/FID**							
X00405	XG.2000.1141-12		Gasoline Range Organics	2	RPD	1	NA		10/16/00
X00410-009		**SW846 8260A Purgeable VOCs by GC/MS**							
X00410	XG.2000.1175-9	75-34-3	1,1 Dichloroethene	< 1	RPD	1	NA		10/18/00

Quality Control Summary

Client: **CH2MHILL**

Project: **0010162** **KAFB**

Explanation of codes

D	*Not applicable due to sample dilut*
L	*Not applicable due to MDL proxim*

X00410	XG.2000.1175-9	106-46-7	1,4 Dichlorobenzene	< 1	RPD	1	NA		10/18/00
X00410	XG.2000.1175-9	71-43-2	Benzene	1	RPD	1	NA		10/18/00
X00410	XG.2000.1175-9	108-90-7	Chlorobenzene	2	RPD	1	NA		10/18/00
X00410	XG.2000.1175-9	108-88-3	Toluene	< 1	RPD	1	NA		10/18/00
X00410	XG.2000.1175-9	79-01-6	Trichloroethene	< 1	RPD	1	NA		10/18/00

QC Type **MB: Method Blank** QC Matrix **WATER**

QC Group	Run Sequence	CAS #	Analyte	Result	Units	Dilution Factor	Detection Limit	Code	Run Date
X00404-001		**SW846 ME/8015A Diesel Range Organics by GC/FID**							
X00404	XG.2000.1139-17		Diesel Range Organics	ND	mg / L	1	25		10/14/00
X00404-008		**SW846 ME/8015A Diesel Range Organics by GC/FID**							
X00404	XG.2000.1150-24		Diesel Range Organics	ND	mg / L	1	25		10/17/00
X00404-010		**SW846 ME/8015A Diesel Range Organics by GC/FID**							
X00404	XG.2000.1189-1		Diesel Range Organics	ND	mg / L	1	25		10/23/00
X00405-001		**SW846 5030A/8015A GRO by GC/FID**							
X00405	XG.2000.1141-10		Gasoline Range Organics	ND	mg / L	1	0.05		10/16/00
X00405-008		**SW846 5030A/8015A GRO by GC/FID**							
X00405	XG.2000.1161-9		Gasoline Range Organics	ND	mg / L	1	0.05		10/19/[illegible]
X00405-010		**SW846 5030A/8015A GRO by GC/FID**							
X00405	XG.2000.1204-1		Gasoline Range Organics	ND	mg / L	1	0.05		10/23/00
X00410-001		**SW846 8260A Purgeable VOCs by GC/MS**							
X00410	XG.2000.1175-1	75-34-3	1,1 Dichloroethane	ND	ug / L	1	1		10/18/00
X00410	XG.2000.1175-1	75-34-3	1,1 Dichloroethene	ND	ug / L	1	1		10/18/00
X00410	XG.2000.1175-1	71-55-6	1,1,1 Trichloroethane	ND	ug / L	1	1		10/18/00
X00410	XG.2000.1175-1	630-20-6	1,1,1,2 Tetrachloroethane	ND	ug / L	1	1		10/18/00
X00410	XG.2000.1175-1	79-00-5	1,1,2 Trichloroethane	ND	ug / L	1	1		10/18/00
X00410	XG.2000.1175-1	79-34-5	1,1,2,2 Tetrachloroethane	ND	ug / L	1	1		10/18/00
X00410	XG.2000.1175-1	106-93-4	1,2 Dibromoethane (EDB)	ND	ug / L	1	1		10/18/00
X00410	XG.2000.1175-1	95-50-1	1,2 Dichlorobenzene	ND	ug / L	1	1		10/18/00
X00410	XG.2000.1175-1	107-06-2	1,2 Dichloroethane	ND	ug / L	1	1		10/18/00
X00410	XG.2000.1175-1	78-87-5	1,2 Dichloropropane	ND	ug / L	1	1		10/18/00
X00410	XG.2000.1175-1	96-18-4	1,2,3 Trichloropropane	ND	ug / L	1	1		10/18/00
X00410	XG.2000.1175-1	95-63-6	1,2,4-Trimethylbenzene	ND	ug / L	1	1		10/18/00
X00410	XG.2000.1175-1	541-73-1	1,3 Dichlorobenzene	ND	ug / L	1	1		10/18/00
X00410	XG.2000.1175-1	108-67-8	1,3,5-Trimethylbenzene	ND	ug / L	1	1		10/18/00
X00410	XG.2000.1175-1	764-41-0	1,4 Dichloro-2-butene	ND	ug / L	1	10		10/18/00
X00410	XG.2000.1175-1	106-46-7	1,4 Dichlorobenzene	ND	ug / L	1	1		10/18/00
X00410	XG.2000.1175-1	78-93-3	2-Butanone (MEK)	ND	ug / L	1	5		10/18/00
X00410	XG.2000.1175-1	110-75-8	2-Chloroethylvinylether	ND	ug / L	1	5		10/18/00
X00410	XG.2000.1175-1	591-78-6	2-Hexanone (MBK)	ND	ug / L	1	5		10/18/00
X00410	XG.2000.1175-1	108-10-1	4-Methyl-2-pentanone (MIBK)	ND	ug / L	1	5		10/18/00
X00410	XG.2000.1175-1	67-64-1	Acetone	ND	ug / L	1	10		10/18/00
X00410	XG.2000.1175-1	107-02-8	Acrolein	ND	ug / L	1	20		10/18/[illegible]
X00410	XG.2000.1175-1	107-13-1	Acrylonitrile	ND	ug / L	1	20		10/18/[illegible]

Quality Control Summary

Client: CH2MHILL

Project: 0010162 KAFB

Explanation of codes

D *Not applicable due to sample dilution*

L *Not applicable due to MDL proximity*

X00410	XG.2000.1175-1	71-43-2	Benzene	ND	ug / L	1	1	10/18/00
X00410	XG.2000.1175-1	75-27-4	Bromodichloromethane	ND	ug / L	1	1	10/18/00
X00410	XG.2000.1175-1	75-25-2	Bromoform	ND	ug / L	1	1	10/18/00
X00410	XG.2000.1175-1	74-83-9	Bromomethane	ND	ug / L	1	5	10/18/00
X00410	XG.2000.1175-1	75-15-0	Carbon disulfide	ND	ug / L	1	5	10/18/00
X00410	XG.2000.1175-1	56-23-5	Carbon tetrachloride	ND	ug / L	1	1	10/18/00
X00410	XG.2000.1175-1	108-90-7	Chlorobenzene	ND	ug / L	1	1	10/18/00
X00410	XG.2000.1175-1	124-48-1	Chlorodibromomethane	ND	ug / L	1	1	10/18/00
X00410	XG.2000.1175-1	75-00-3	Chloroethane	ND	ug / L	1	5	10/18/00
X00410	XG.2000.1175-1	67-66-3	Chloroform	ND	ug / L	1	1	10/18/00
X00410	XG.2000.1175-1	74-87-3	Chloromethane	ND	ug / L	1	5	10/18/00
X00410	XG.2000.1175-1	156-59-2	cis-1,2 dichloroethene	ND	ug / L	1	1	10/18/00
X00410	XG.2000.1175-1	10061-01-5	cis-1,3 dichloropropene	ND	ug / L	1	1	10/18/00
X00410	XG.2000.1175-1	74-95-3	Dibromomethane	ND	ug / L	1	1	10/18/00
X00410	XG.2000.1175-1	97-63-2	Ethyl methacrylate	ND	ug / L	1	5	10/18/00
X00410	XG.2000.1175-1	100-41-4	Ethylbenzene	ND	ug / L	1	1	10/18/00
X00410	XG.2000.1175-1		Freon 113	ND	ug / L	1	5	10/18/00
X00410	XG.2000.1175-1	75-71-8	Freon 12	ND	ug / L	1	10	10/18/00
X00410	XG.2000.1175-1	74-88-4	Iodomethane	ND	ug / L	1	5	10/18/00
X00410	XG.2000.1175-1	1634-04-4	Methyl t-butyl ether (MTBE)	ND	ug / L	1	1	10/18/00
X00410	XG.2000.1175-1	75-09-2	Methylene chloride	ND	ug / L	1	10	10/18/00
X00410	XG.2000.1175-1	91-20-3	Naphthalene	ND	ug / L	1	5	10/18/00
X00410	XG.2000.1175-1	95-47-6	o-Xylene	ND	ug / L	1	1	10/18/00
X00410	XG.2000.1175-1	108-38-3/106-42	p/m Xylenes	ND	ug / L	1	2	10/18/00
X00410	XG.2000.1175-1	100-42-5	Styrene	ND	ug / L	1	1	10/18/00
X00410	XG.2000.1175-1	156-60-5	t-1,2 Dichloroethene	ND	ug / L	1	1	10/18/00
X00410	XG.2000.1175-1	10061-02-6	t-1,3 Dichloropropene	ND	ug / L	1	1	10/18/00
X00410	XG.2000.1175-1	127-18-4	Tetrachloroethene	ND	ug / L	1	1	10/18/00
X00410	XG.2000.1175-1	108-88-3	Toluene	ND	ug / L	1	1	10/18/00
X00410	XG.2000.1175-1	79-01-6	Trichloroethene	ND	ug / L	1	1	10/18/00
X00410	XG.2000.1175-1	75-69-4	Trichlorofluoromethane	ND	ug / L	1	5	10/18/00
X00410	XG.2000.1175-1	108-05-4	Vinyl acetate	ND	ug / L	1	5	10/18/00
X00410	XG.2000.1175-1	75-01-4	Vinyl chloride	ND	ug / L	1	5	10/18/00
X00410-023		**SW846 8260A Purgeable VOCs by GC/MS**						
X00410	XG.2000.1221-1	75-34-3	1,1 Dichloroethane	ND	ug / L	1	1	10/27/00
X00410	XG.2000.1221-1	75-34-3	1,1 Dichloroethene	ND	ug / L	1	1	10/27/00
X00410	XG.2000.1221-1	71-55-6	1,1,1 Trichloroethane	ND	ug / L	1	1	10/27/00
X00410	XG.2000.1221-1	630-20-6	1,1,1,2 Tetrachloroethane	ND	ug / L	1	1	10/27/00
X00410	XG.2000.1221-1	79-00-5	1,1,2 Trichloroethane	ND	ug / L	1	1	10/27/00
X00410	XG.2000.1221-1	79-34-5	1,1,2,2 Tetrachloroethane	ND	ug / L	1	1	10/27/00
X00410	XG.2000.1221-1	106-93-4	1,2 Dibromoethane (EDB)	ND	ug / L	1	1	10/27/00
X00410	XG.2000.1221-1	95-50-1	1,2 Dichlorobenzene	ND	ug / L	1	1	10/27/00
X00410	XG.2000.1221-1	107-06-2	1,2 Dichloroethane	ND	ug / L	1	1	10/27/00
X00410	XG.2000.1221-1	78-87-5	1,2 Dichloropropane	ND	ug / L	1	1	10/27/00
X00410	XG.2000.1221-1	96-18-4	1,2,3 Trichloropropane	ND	ug / L	1	1	10/27/00
X00410	XG.2000.1221-1	95-63-6	1,2,4-Trimethylbenzene	ND	ug / L	1	1	10/27/00
X00410	XG.2000.1221-1	541-73-1	1,3 Dichlorobenzene	ND	ug / L	1	1	10/27/00
X00410	XG.2000.1221-1	108-67-8	1,3,5-Trimethylbenzene	ND	ug / L	1	1	10/27/00
X00410	XG.2000.1221-1	764-41-0	1,4 Dichloro-2-butene	ND	ug / L	1	10	10/27/00

Quality Control Summary

Client: **CH2MHILL**

Project: **0010162** KAFB

Explanation of codes

D *Not applicable due to sample dilut*

L *Not applicable due to MDL proxim*

X00410	XG.2000.1221-1	106-46-7	1,4 Dichlorobenzene	ND	ug / L	1	1		10/27/0
X00410	XG.2000.1221-1	78-93-3	2-Butanone (MEK)	ND	ug / L	1	5		10/27/0
X00410	XG.2000.1221-1	110-75-8	2-Chloroethylvinylether	ND	ug / L	1	5		10/27/0
X00410	XG.2000.1221-1	591-78-6	2-Hexanone (MBK)	ND	ug / L	1	5		10/27/0
X00410	XG.2000.1221-1	108-10-1	4-Methyl-2-pentanone (MIBK)	ND	ug / L	1	5		10/27/0
X00410	XG.2000.1221-1	67-64-1	Acetone	ND	ug / L	1	10		10/27/0
X00410	XG.2000.1221-1	107-02-8	Acrolein	ND	ug / L	1	20		10/27/0
X00410	XG.2000.1221-1	107-13-1	Acrylonitrile	ND	ug / L	1	20		10/27/0
X00410	XG.2000.1221-1	71-43-2	Benzene	ND	ug / L	1	1		10/27/0
X00410	XG.2000.1221-1	75-27-4	Bromodichloromethane	ND	ug / L	1	1		10/27/0
X00410	XG.2000.1221-1	75-25-2	Bromoform	ND	ug / L	1	1		10/27/0
X00410	XG.2000.1221-1	74-83-9	Bromomethane	ND	ug / L	1	5		10/27/0
X00410	XG.2000.1221-1	75-15-0	Carbon disulfide	ND	ug / L	1	5		10/27/0
X00410	XG.2000.1221-1	56-23-5	Carbon tetrachloride	ND	ug / L	1	1		10/27/0
X00410	XG.2000.1221-1	108-90-7	Chlorobenzene	ND	ug / L	1	1		10/27/0
X00410	XG.2000.1221-1	124-48-1	Chlorodibromomethane	ND	ug / L	1	1		10/27/0
X00410	XG.2000.1221-1	75-00-3	Chloroethane	ND	ug / L	1	5		10/27/0
X00410	XG.2000.1221-1	67-66-3	Chloroform	ND	ug / L	1	1		10/27/0
X00410	XG.2000.1221-1	74-87-3	Chloromethane	ND	ug / L	1	5		10/27/0
X00410	XG.2000.1221-1	156-59-2	cis-1,2 dichloroethene	ND	ug / L	1	1		10/27/0
X00410	XG.2000.1221-1	10061-01-5	cis-1,3 dichloropropene	ND	ug / L	1	1		10/27/0
X00410	XG.2000.1221-1	74-95-3	Dibromomethane	ND	ug / L	1	1		10/27/0
X00410	XG.2000.1221-1	97-63-2	Ethyl methacrylate	ND	ug / L	1	5		10/27/0
X00410	XG.2000.1221-1	100-41-4	Ethylbenzene	ND	ug / L	1	1		10/27/0
X00410	XG.2000.1221-1		Freon 113	ND	ug / L	1	5		10/27
X00410	XG.2000.1221-1	75-71-8	Freon 12	ND	ug / L	1	10		10/27/0
X00410	XG.2000.1221-1	74-88-4	Iodomethane	ND	ug / L	1	5		10/27/0
X00410	XG.2000.1221-1	1634-04-4	Methyl t-butyl ether (MTBE)	ND	ug / L	1	1		10/27/0
X00410	XG.2000.1221-1	75-09-2	Methylene chloride	ND	ug / L	1	10		10/27/0
X00410	XG.2000.1221-1	91-20-3	Naphthalene	ND	ug / L	1	5		10/27/0
X00410	XG.2000.1221-1	95-47-6	o-Xylene	ND	ug / L	1	1		10/27/0
X00410	XG.2000.1221-1	108-38-3/106-42	p/m Xylenes	ND	ug / L	1	2		10/27/0
X00410	XG.2000.1221-1	100-42-5	Styrene	1.2	ug / L	1	1		10/27/0
X00410	XG.2000.1221-1	156-60-5	t-1,2 Dichloroethene	ND	ug / L	1	1		10/27/0
X00410	XG.2000.1221-1	10061-02-6	t-1,3 Dichloropropene	ND	ug / L	1	1		10/27/0
X00410	XG.2000.1221-1	127-18-4	Tetrachloroethene	ND	ug / L	1	1		10/27/0
X00410	XG.2000.1221-1	108-88-3	Toluene	ND	ug / L	1	1		10/27/0
X00410	XG.2000.1221-1	79-01-6	Trichloroethene	ND	ug / L	1	1		10/27/0
X00410	XG.2000.1221-1	75-69-4	Trichlorofluoromethane	ND	ug / L	1	5		10/27/0
X00410	XG.2000.1221-1	108-05-4	Vinyl acetate	ND	ug / L	1	5		10/27/0
X00410	XG.2000.1221-1	75-01-4	Vinyl chloride	ND	ug / L	1	5		10/27/0
X00410-028		**SW846 8260A Purgeable VOCs by GC/MS**							
X00410	XG.2000.1221-4	75-34-3	1,1 Dichloroethane	ND	ug / L	1	1		10/30/0
X00410	XG.2000.1221-4	75-34-3	1,1 Dichloroethene	ND	ug / L	1	1		10/30/0
X00410	XG.2000.1221-4	71-55-6	1,1,1 Trichloroethane	ND	ug / L	1	1		10/30/0
X00410	XG.2000.1221-4	630-20-6	1,1,1,2 Tetrachloroethane	ND	ug / L	1	1		10/30/0
X00410	XG.2000.1221-4	79-00-5	1,1,2 Trichloroethane	ND	ug / L	1	1		10/30/0
X00410	XG.2000.1221-4	79-34-5	1,1,2,2 Tetrachloroethane	ND	ug / L	1	1		10/30/0
X00410	XG.2000.1221-4	106-93-4	1,2 Dibromoethane (EDB)	ND	ug / L	1	1		10/30

Quality Control Summary

Client: CH2MHILL

ect: 0010162 KAFB

Explanation of codes

D *Not applicable due to sample dilution*

L *Not applicable due to MDL proximity*

X00410	XG.2000.1221-4	95-50-1	1,2 Dichlorobenzene	ND	ug / L	1	1	10/30/00
X00410	XG.2000.1221-4	107-06-2	1,2 Dichloroethane	ND	ug / L	1	1	10/30/00
X00410	XG.2000.1221-4	78-87-5	1,2 Dichloropropane	ND	ug / L	1	1	10/30/00
X00410	XG.2000.1221-4	96-18-4	1,2,3 Trichloropropane	ND	ug / L	1	1	10/30/00
X00410	XG.2000.1221-4	95-63-6	1,2,4-Trimethylbenzene	ND	ug / L	1	1	10/30/00
X00410	XG.2000.1221-4	541-73-1	1,3 Dichlorobenzene	ND	ug / L	1	1	10/30/00
X00410	XG.2000.1221-4	108-67-8	1,3,5-Trimethylbenzene	ND	ug / L	1	1	10/30/00
X00410	XG.2000.1221-4	764-41-0	1,4 Dichloro-2-butene	ND	ug / L	1	10	10/30/00
X00410	XG.2000.1221-4	106-46-7	1,4 Dichlorobenzene	ND	ug / L	1	1	10/30/00
X00410	XG.2000.1221-4	78-93-3	2-Butanone (MEK)	ND	ug / L	1	5	10/30/00
X00410	XG.2000.1221-4	110-75-8	2-Chloroethylvinylether	ND	ug / L	1	5	10/30/00
X00410	XG.2000.1221-4	591-78-6	2-Hexanone (MBK)	ND	ug / L	1	5	10/30/00
X00410	XG.2000.1221-4	108-10-1	4-Methyl-2-pentanone (MIBK)	ND	ug / L	1	5	10/30/00
X00410	XG.2000.1221-4	67-64-1	Acetone	ND	ug / L	1	10	10/30/00
X00410	XG.2000.1221-4	107-02-8	Acrolein	ND	ug / L	1	20	10/30/00
X00410	XG.2000.1221-4	107-13-1	Acrylonitrile	ND	ug / L	1	20	10/30/00
X00410	XG.2000.1221-4	71-43-2	Benzene	ND	ug / L	1	1	10/30/00
X00410	XG.2000.1221-4	75-27-4	Bromodichloromethane	ND	ug / L	1	1	10/30/00
X00410	XG.2000.1221-4	75-25-2	Bromoform	ND	ug / L	1	1	10/30/00
X00410	XG.2000.1221-4	74-83-9	Bromomethane	ND	ug / L	1	5	10/30/00
X00410	XG.2000.1221-4	75-15-0	Carbon disulfide	ND	ug / L	1	5	10/30/00
X00410	XG.2000.1221-4	56-23-5	Carbon tetrachloride	ND	ug / L	1	1	10/30/00
X00410	XG.2000.1221-4	108-90-7	Chlorobenzene	ND	ug / L	1	1	10/30/00
[illegible]10	XG.2000.1221-4	124-48-1	Chlorodibromomethane	ND	ug / L	1	1	10/30/00
[illegible].0	XG.2000.1221-4	75-00-3	Chloroethane	ND	ug / L	1	5	10/30/00
X00410	XG.2000.1221-4	67-66-3	Chloroform	ND	ug / L	1	1	10/30/00
X00410	XG.2000.1221-4	74-87-3	Chloromethane	ND	ug / L	1	5	10/30/00
X00410	XG.2000.1221-4	156-59-2	cis-1,2 dichloroethene	ND	ug / L	1	1	10/30/00
X00410	XG.2000.1221-4	10061-01-5	cis-1,3 dichloropropene	ND	ug / L	1	1	10/30/00
X00410	XG.2000.1221-4	74-95-3	Dibromomethane	ND	ug / L	1	1	10/30/00
X00410	XG.2000.1221-4	97-63-2	Ethyl methacrylate	ND	ug / L	1	5	10/30/00
X00410	XG.2000.1221-4	100-41-4	Ethylbenzene	ND	ug / L	1	1	10/30/00
X00410	XG.2000.1221-4		Freon 113	ND	ug / L	1	5	10/30/00
X00410	XG.2000.1221-4	75-71-8	Freon 12	ND	ug / L	1	10	10/30/00
X00410	XG.2000.1221-4	74-88-4	Iodomethane	ND	ug / L	1	5	10/30/00
X00410	XG.2000.1221-4	1634-04-4	Methyl t-butyl ether (MTBE)	ND	ug / L	1	1	10/30/00
X00410	XG.2000.1221-4	75-09-2	Methylene chloride	ND	ug / L	1	10	10/30/00
X00410	XG.2000.1221-4	91-20-3	Naphthalene	ND	ug / L	1	5	10/30/00
X00410	XG.2000.1221-4	95-47-6	o-Xylene	ND	ug / L	1	1	10/30/00
X00410	XG.2000.1221-4	108-38-3/106-42	p/m Xylenes	ND	ug / L	1	2	10/30/00
X00410	XG.2000.1221-4	100-42-5	Styrene	ND	ug / L	1	1	10/30/00
X00410	XG.2000.1221-4	156-60-5	t-1,2 Dichloroethene	ND	ug / L	1	1	10/30/00
X00410	XG.2000.1221-4	10061-02-6	t-1,3 Dichloropropene	ND	ug / L	1	1	10/30/00
X00410	XG.2000.1221-4	127-18-4	Tetrachloroethene	ND	ug / L	1	1	10/30/00
X00410	XG.2000.1221-4	108-88-3	Toluene	ND	ug / L	1	1	10/30/00
X00410	XG.2000.1221-4	79-01-6	Trichloroethene	ND	ug / L	1	1	10/30/00
X00410	XG.2000.1221-4	75-69-4	Trichlorofluoromethane	ND	ug / L	1	5	10/30/00
X00410	XG.2000.1221-4	108-05-4	Vinyl acetate	ND	ug / L	1	5	10/30/00
[illegible]410	XG.2000.1221-4	75-01-4	Vinyl chloride	ND	ug / L	1	5	10/30/00

Quality Control Summary

Client: CH2MHILL
Project: 0010162 KAFB

Explanation of codes

D	Not applicable due to sample dilut
L	Not applicable due to MDL proxim

QC Type **MS: Matrix Spike** QC Matrix **WATER**

QC Group	Run Sequence	CAS #	Analyte	Result	Units	Dilution Factor	Detection Limit	Code	Run Date
X00404-005		**SW846 ME/8015A Diesel Range Organics by GC/FID**							
X00404	XG.2000.1139-21		Diesel Range Organics	110	% Recovery	1	NA		10/14/00
X00405-005	.	**SW846 5030A/8015A GRO by GC/FID**							
X00405	XG.2000.1141-14		Gasoline Range Organics	97	% Recovery	1	NA		10/16/00
X00410-006		**SW846 8260A Purgeable VOCs by GC/MS**							
X00410	XG.2000.1175-6	75-34-3	1,1 Dichloroethene	117	% Recovery	1	NA		10/18/00
X00410	XG.2000.1175-6	106-46-7	1,4 Dichlorobenzene	102	% Recovery	1	NA		10/18/00
X00410	XG.2000.1175-6	71-43-2	Benzene	117	% Recovery	1	NA		10/18/00
X00410	XG.2000.1175-6	108-90-7	Chlorobenzene	110	% Recovery	1	NA		10/18/00
X00410	XG.2000.1175-6	108-88-3	Toluene	115	% Recovery	1	NA		10/18/00
X00410	XG.2000.1175-6	79-01-6	Trichloroethene	112	% Recovery	1	NA		10/18/00

QC Type **MSD: Matrix Spike Duplicate Accuracy** QC Matrix **WATER**

QC Group	Run Sequence	CAS #	Analyte	Result	Units	Dilution Factor	Detection Limit	Code	Run Date
X00404-006		**SW846 ME/8015A Diesel Range Organics by GC/FID**							
X00404	XG.2000.1139-22		Diesel Range Organics	109	% Recovery	1	NA		10/14/00
X00405-006		**SW846 5030A/8015A GRO by GC/FID**							
X00405	XG.2000.1141-15		Gasoline Range Organics	98	% Recovery	1	NA		10/16/00
X00410-007		**SW846 8260A Purgeable VOCs by GC/MS**							
X00410	XG.2000.1175-7	75-34-3	1,1 Dichloroethene	109	% Recovery	1	NA		10/18/00
X00410	XG.2000.1175-7	106-46-7	1,4 Dichlorobenzene	99	% Recovery	1	NA		10/18/00
X00410	XG.2000.1175-7	71-43-2	Benzene	112	% Recovery	1	NA		10/18/00
X00410	XG.2000.1175-7	108-90-7	Chlorobenzene	106	% Recovery	1	NA		10/18/00
X00410	XG.2000.1175-7	108-88-3	Toluene	110	% Recovery	1	NA		10/18/00
X00410	XG.2000.1175-7	79-01-6	Trichloroethene	107	% Recovery	1	NA		10/18/00

QC Type **MSD: Matrix Spike Duplicate Precision** QC Matrix **WATER**

QC Group	Run Sequence	CAS #	Analyte	Result	Units	Dilution Factor	Detection Limit	Code	Run Date
X00404-006		**SW846 ME/8015A Diesel Range Organics by GC/FID**							
X00404	XG.2000.1139-22		Diesel Range Organics	< 1	RPD	1	NA		10/14/00
X00405-006		**SW846 5030A/8015A GRO by GC/FID**							
X00405	XG.2000.1141-15		Gasoline Range Organics	1	RPD	1	NA		10/16/00
X00410-007		**SW846 8260A Purgeable VOCs by GC/MS**							
X00410	XG.2000.1175-7	75-34-3	1,1 Dichloroethene	7	RPD	1	NA		10/18

Quality Control Summary

Client: **CH2MHILL**

:ct: **0010162** **KAFB**

Explanation of codes

D *Not applicable due to sample dilution*

L *Not applicable due to MDL proximity*

X00410	XG.2000.1175-7	106-46-7	1,4 Dichlorobenzene	4	RPD	1	NA		10/18/00
X00410	XG.2000.1175-7	71-43-2	Benzene	4	RPD	1	NA		10/18/00
X00410	XG.2000.1175-7	108-90-7	Chlorobenzene	4	RPD	1	NA		10/18/00
X00410	XG.2000.1175-7	108-88-3	Toluene	4	RPD	1	NA		10/18/00
X00410	XG.2000.1175-7	79-01-6	Trichloroethene	5	RPD	1	NA		10/18/00

Surrogate Summary: QC

Client: CH2MHILL
ct: 0010162 KAFB

QC Type: LCS

QC Matrix: SOLID

QC Group	Run Sequence	CAS #	Analyte	Result	Units	Dilution Factor	Detection Limit	Code	Run Date
X00392-002		BTEXALL							
X00392	XG.2000.1112-2	NA	4-Bromofluorobenzene	99	% Recovery	1	NA		10/05/00
X00392	XG.2000.1112-2	NA	aaa-Trifluorotoluene	100	% Recovery	1	NA		10/05/00
X00392	XG.2000.1112-2	NA	Bromochloromethane	ND	% Recovery	1	NA		10/05/00
X00392	XG.2000.1112-2	NA	Bromochloropropane	ND	% Recovery	1	NA		10/05/00
X00392	XG.2000.1112-2	NA	Dichlorobutane	ND	% Recovery	1	NA		10/05/00
X00398-005		8260							
X00398	XG.2000.1158-3	NA	1,2 Dichloroethane-D4 (SS)	87	% Recovery	1	NA		10/10/00
X00398	XG.2000.1206-2	NA	1,2 Dichloroethane-D4 (SS)	87	% Recovery	1	NA		10/10/00
X00398	XG.2000.1158-3	NA	4-Bromofluorobenzene (SS)	98	% Recovery	1	NA		10/10/00
X00398	XG.2000.1206-2	NA	4-Bromofluorobenzene (SS)	98	% Recovery	1	NA		10/10/00
X00398	XG.2000.1158-3	NA	Dibromofluoromethane (SS)	98	% Recovery	1	NA		10/10/00
X00398	XG.2000.1206-2	NA	Dibromofluoromethane (SS)	98	% Recovery	1	NA		10/10/00
X00398	XG.2000.1158-3	NA	Toluene-D8 (SS)	100	% Recovery	1	NA		10/10/00
X00398	XG.2000.1206-2	NA	Toluene-D8 (SS)	100	% Recovery	1	NA		10/10/00
X00406-002		8270							
[illegible]	XG.2000.1171-2	NA	*2,4,6-TRIBROMOPHENOL	87	% Recovery	1	NA		10/17/00
X[illegible]6	XG.2000.1171-2	NA	*2-FLUOROBIPHENYL	84	% Recovery	1	NA		10/17/00
X00406	XG.2000.1171-2	NA	*2-FLUOROPHENOL	77	% Recovery	1	NA		10/17/00
X00406	XG.2000.1171-2	NA	*NITROBENZENE-D5	80	% Recovery	1	NA		10/17/00
X00406	XG.2000.1171-2	NA	*PHENOL-D6	83	% Recovery	1	NA		10/17/00
X00406	XG.2000.1171-2	NA	*TERPHENYL-D14	88	% Recovery	1	NA		10/17/00
X00407-002		DRO							
X00407	XG.2000.1150-10	NA	O-terphenyl	101	% Recovery	1	NA		10/17/00
X00408-002		GRO							
X00408	XG.2000.1155-2	NA	4-Bromofluorobenzene-FID	102	% Recovery	1	NA		10/16/00
X00408	XG.2000.1155-2	NA	4-Bromofluorobenzene-PID	ND	% Recovery	1	NA		10/16/00
X00408	XG.2000.1155-2	NA	aaa-Trifluorotoluene-FID	105	% Recovery	1	NA		10/16/00
X00408	XG.2000.1155-2	NA	aaa-Trifluorotoluene-PID	ND	% Recovery	1	NA		10/16/00
X00411-002		BTEXALL							
X00411	XG.2000.1164-9	NA	4-Bromofluorobenzene	101	% Recovery	1	NA		10/18/00
X00411	XG.2000.1164-9	NA	aaa-Trifluorotoluene	98	% Recovery	1	NA		10/18/00
X00411	XG.2000.1164-9	NA	Bromochloromethane	57	% Recovery	1	NA		10/18/00
X00411	XG.2000.1164-9	NA	Bromochloropropane	65	% Recovery	1	NA		10/18/00
X00411	XG.2000.1164-9	NA	Dichlorobutane	153	% Recovery	1	NA		10/18/00

Surrogate Summary: QC

Client: CH2MHILL
Project: 0010162 KAFB

QC Type: LCSD

QC Matrix: SOLID

QC Group	Run Sequence	CAS #	Analyte	Result	Units	Dilution Factor	Detection Limit	Code	Run Date
X00392-003		BTEXALL							
X00392	XG.2000.1112-3	NA	4-Bromofluorobenzene	100	% Recovery	1	NA		10/05/0
X00392	XG.2000.1112-3	NA	aaa-Trifluorotoluene	99	% Recovery	1	NA		10/05/0
X00392	XG.2000.1112-3	NA	Bromochloromethane	ND	% Recovery	1	NA		10/05/0
X00392	XG.2000.1112-3	NA	Bromochloropropane	ND	% Recovery	1	NA		10/05/0
X00392	XG.2000.1112-3	NA	Dichlorobutane	ND	% Recovery	1	NA		10/05/0
X00398-006		8260							
X00398	XG.2000.1158-4	NA	1,2 Dichloroethane-D4 (SS)	90	% Recovery	1	NA		10/10/0
X00398	XG.2000.1206-3	NA	1,2 Dichloroethane-D4 (SS)	90	% Recovery	1	NA		10/10/0
X00398	XG.2000.1158-4	NA	4-Bromofluorobenzene (SS)	100	% Recovery	1	NA		10/10/0
X00398	XG.2000.1206-3	NA	4-Bromofluorobenzene (SS)	100	% Recovery	1	NA		10/10/0
X00398	XG.2000.1158-4	NA	Dibromofluoromethane (SS)	99	% Recovery	1	NA		10/10/0
X00398	XG.2000.1206-3	NA	Dibromofluoromethane (SS)	99	% Recovery	1	NA		10/10/0
X00398	XG.2000.1158-4	NA	Toluene-D8 (SS)	101	% Recovery	1	NA		10/10/0
X00398	XG.2000.1206-3	NA	Toluene-D8 (SS)	101	% Recovery	1	NA		10/10/0
X00406-003		8270							
X00406	XG.2000.1171-3	NA	*2,4,6-TRIBROMOPHENOL	87	% Recovery	1	NA		10/17
X00406	XG.2000.1171-3	NA	*2-FLUOROBIPHENYL	83	% Recovery	1	NA		10/17/0
X00406	XG.2000.1171-3	NA	*2-FLUOROPHENOL	77	% Recovery	1	NA		10/17/0
X00406	XG.2000.1171-3	NA	*NITROBENZENE-D5	80	% Recovery	1	NA		10/17/0
X00406	XG.2000.1171-3	NA	*PHENOL-D6	82	% Recovery	1	NA		10/17/0
X00406	XG.2000.1171-3	NA	*TERPHENYL-D14	88	% Recovery	1	NA		10/17/0
X00407-003		DRO							
X00407	XG.2000.1150-11	NA	O-terphenyl	102	% Recovery	1	NA		10/17/0
X00408-003		GRO							
X00408	XG.2000.1155-3	NA	4-Bromofluorobenzene-FID	102	% Recovery	1	NA		10/16/0
X00408	XG.2000.1155-3	NA	4-Bromofluorobenzene-PID	ND	% Recovery	1	NA		10/16/0
X00408	XG.2000.1155-3	NA	aaa-Trifluorotoluene-FID	104	% Recovery	1	NA		10/16/0
X00408	XG.2000.1155-3	NA	aaa-Trifluorotoluene-PID	ND	% Recovery	1	NA		10/16/0
X00411-003		BTEXALL							
X00411	XG.2000.1164-10	NA	4-Bromofluorobenzene	102	% Recovery	1	NA		10/18/00
X00411	XG.2000.1164-10	NA	aaa-Trifluorotoluene	98	% Recovery	1	NA		10/18/00
X00411	XG.2000.1164-10	NA	Bromochloromethane	78	% Recovery	1	NA		10/18/00
X00411	XG.2000.1164-10	NA	Bromochloropropane	110	% Recovery	1	NA		10/18/00
X00411	XG.2000.1164-10	NA	Dichlorobutane	466	% Recovery	1	NA		10/18/00

Surrogate Summary: QC

Client: CH2MHILL

ct: 0010162 KAFB

QC Type **MB** QC Matrix **SOLID**

QC Group	Run Sequence	CAS #	Analyte	Result	Units	Dilution Factor	Detection Limit	Code	Run Date
X00392-001		**BTEXALL**							
X00392	XG.2000.1112-1	NA	4-Bromofluorobenzene	98	% Recovery	1	NA		10/05/00
X00392	XG.2000.1112-1	NA	aaa-Trifluorotoluene	102	% Recovery	1	NA		10/05/00
X00392	XG.2000.1112-1	NA	Bromochloromethane	ND	% Recovery	1	NA		10/05/00
X00392	XG.2000.1112-1	NA	Bromochloropropane	ND	% Recovery	1	NA		10/05/00
X00392	XG.2000.1112-1	NA	Dichlorobutane	ND	% Recovery	1	NA		10/05/00
X00392-014		**BTEXALL**							
X00392	XG.2000.1156-1	NA	4-Bromofluorobenzene	99	% Recovery	1	NA		10/17/00
X00392	XG.2000.1156-1	NA	aaa-Trifluorotoluene	101	% Recovery	1	NA		10/17/00
X00392	XG.2000.1156-1	NA	Bromochloromethane	24	% Recovery	1	NA		10/17/00
X00392	XG.2000.1156-1	NA	Bromochloropropane	24	% Recovery	1	NA		10/17/00
X00392	XG.2000.1156-1	NA	Dichlorobutane	30	% Recovery	1	NA		10/17/00
X00392-024		**BTEXALL**							
X00392	XG.2000.1164-4	NA	4-Bromofluorobenzene	99	% Recovery	1	NA		10/18/00
X00392	XG.2000.1164-4	NA	aaa-Trifluorotoluene	101	% Recovery	1	NA		10/18/00
X00392	XG.2000.1164-4	NA	Bromochloromethane	93	% Recovery	1	NA		10/18/00
[illegible]2	XG.2000.1164-4	NA	Bromochloropropane	75	% Recovery	1	NA		10/18/00
[illegible]2	XG.2000.1164-4	NA	Dichlorobutane	71	% Recovery	1	NA		10/18/00
X00398-001		**8260**							
X00398	XG.2000.1158-1	NA	1,2 Dichloroethane-D4 (SS)	93	% Recovery	1	NA		10/10/00
X00398	XG.2000.1206-1	NA	1,2 Dichloroethane-D4 (SS)	93	% Recovery	1	NA		10/10/00
X00398	XG.2000.1158-1	NA	4-Bromofluorobenzene (SS)	100	% Recovery	1	NA		10/10/00
X00398	XG.2000.1206-1	NA	4-Bromofluorobenzene (SS)	100	% Recovery	1	NA		10/10/00
X00398	XG.2000.1158-1	NA	Dibromofluoromethane (SS)	99	% Recovery	1	NA		10/10/00
X00398	XG.2000.1206-1	NA	Dibromofluoromethane (SS)	99	% Recovery	1	NA		10/10/00
X00398	XG.2000.1158-1	NA	Toluene-D8 (SS)	102	% Recovery	1	NA		10/10/00
X00398	XG.2000.1206-1	NA	Toluene-D8 (SS)	102	% Recovery	1	NA		10/10/00
X00398-007		**8260**							
X00398	XG.2000.1158-5	NA	1,2 Dichloroethane-D4 (SS)	93	% Recovery	1	NA		10/16/00
X00398	XG.2000.1206-4	NA	1,2 Dichloroethane-D4 (SS)	93	% Recovery	1	NA		10/16/00
X00398	XG.2000.1158-5	NA	4-Bromofluorobenzene (SS)	99	% Recovery	1	NA		10/16/00
X00398	XG.2000.1206-4	NA	4-Bromofluorobenzene (SS)	99	% Recovery	1	NA		10/16/00
X00398	XG.2000.1158-5	NA	Dibromofluoromethane (SS)	99	% Recovery	1	NA		10/16/00
X00398	XG.2000.1206-4	NA	Dibromofluoromethane (SS)	99	% Recovery	1	NA		10/16/00
X00398	XG.2000.1158-5	NA	Toluene-D8 (SS)	100	% Recovery	1	NA		10/16/00
X00398	XG.2000.1206-4	NA	Toluene-D8 (SS)	100	% Recovery	1	NA		10/16/00
X00398-018		**8260**							
X00398	XG.2000.1158-12	NA	1,2 Dichloroethane-D4 (SS)	100	% Recovery	1	NA		10/17/00
X00398	XG.2000.1205-1	NA	1,2 Dichloroethane-D4 (SS)	100	% Recovery	1	NA		10/17/00
X00398	XG.2000.1206-7	NA	1,2 Dichloroethane-D4 (SS)	100	% Recovery	1	NA		10/17/00
[illegible]8	XG.2000.1158-12	NA	4-Bromofluorobenzene (SS)	105	% Recovery	1	NA		10/17/00
[illegible]	XG.2000.1205-1	NA	4-Bromofluorobenzene (SS)	105	% Recovery	1	NA		10/17/00

Surrogate Summary: QC

Client: CH2MHILL

Project: 0010162 KAFB

X00398	XG.2000.1206-7	NA	4-Bromofluorobenzene (SS)	105	% Recovery	1	NA	10/17/00
X00398	XG.2000.1158-12	NA	Dibromofluoromethane (SS)	102	% Recovery	1	NA	10/17/00
X00398	XG.2000.1205-1	NA	Dibromofluoromethane (SS)	102	% Recovery	1	NA	10/17/00
X00398	XG.2000.1206-7	NA	Dibromofluoromethane (SS)	102	% Recovery	1	NA	10/17/00
X00398	XG.2000.1158-12	NA	Toluene-D8 (SS)	103	% Recovery	1	NA	10/17/00
X00398	XG.2000.1205-1	NA	Toluene-D8 (SS)	103	% Recovery	1	NA	10/17/00
X00398	XG.2000.1206-7	NA	Toluene-D8 (SS)	103	% Recovery	1	NA	10/17/00
X00398-028		**8260**						
X00398	XG.2000.1205-3	NA	1,2 Dichloroethane-D4 (SS)	99	% Recovery	1	NA	10/26/00
X00398	XG.2000.1206-9	NA	1,2 Dichloroethane-D4 (SS)	99	% Recovery	1	NA	10/26/00
X00398	XG.2000.1205-3	NA	4-Bromofluorobenzene (SS)	101	% Recovery	1	NA	10/26/00
X00398	XG.2000.1206-9	NA	4-Bromofluorobenzene (SS)	101	% Recovery	1	NA	10/26/00
X00398	XG.2000.1205-3	NA	Dibromofluoromethane (SS)	101	% Recovery	1	NA	10/26/00
X00398	XG.2000.1206-9	NA	Dibromofluoromethane (SS)	101	% Recovery	1	NA	10/26/00
X00398	XG.2000.1205-3	NA	Toluene-D8 (SS)	100	% Recovery	1	NA	10/26/00
X00398	XG.2000.1206-9	NA	Toluene-D8 (SS)	100	% Recovery	1	NA	10/26/00
X00406-001		**8270**						
X00406	XG.2000.1171-1	NA	*2,4,6-TRIBROMOPHENOL	89	% Recovery	1	NA	10/17/00
X00406	XG.2000.1171-1	NA	*2-FLUOROBIPHENYL	88	% Recovery	1	NA	10/17/00
X00406	XG.2000.1171-1	NA	*2-FLUOROPHENOL	85	% Recovery	1	NA	10/17/00
X00406	XG.2000.1171-1	NA	*NITROBENZENE-D5	86	% Recovery	1	NA	10/17/00
X00406	XG.2000.1171-1	NA	*PHENOL-D6	86	% Recovery	1	NA	10/17/00
X00406	XG.2000.1171-1	NA	*TERPHENYL-D14	94	% Recovery	1	NA	10/17/0
X00406-010		**8270**						
X00406	XG.2000.1184-1	NA	*2,4,6-TRIBROMOPHENOL	81	% Recovery	1	NA	10/19/00
X00406	XG.2000.1184-1	NA	*2-FLUOROBIPHENYL	74	% Recovery	1	NA	10/19/00
X00406	XG.2000.1184-1	NA	*2-FLUOROPHENOL	60	% Recovery	1	NA	10/19/00
X00406	XG.2000.1184-1	NA	*NITROBENZENE-D5	66	% Recovery	1	NA	10/19/00
X00406	XG.2000.1184-1	NA	*PHENOL-D6	61	% Recovery	1	NA	10/19/00
X00406	XG.2000.1184-1	NA	*TERPHENYL-D14	85	% Recovery	1	NA	10/19/00
X00407-001		**DRO**						
X00407	XG.2000.1150-9	NA	O-terphenyl	87	% Recovery	1	NA	10/16/00
X00407-014		**DRO**						
X00407	XG.2000.1150-26	NA	O-terphenyl	88	% Recovery	1	NA	10/17/00
X00408-001		**GRO**						
X00408	XG.2000.1155-1	NA	4-Bromofluorobenzene-FID	91	% Recovery	1	NA	10/16/00
X00408	XG.2000.1155-1	NA	4-Bromofluorobenzene-PID	ND	% Recovery	1	NA	10/16/00
X00408	XG.2000.1155-1	NA	aaa-Trifluorotoluene-FID	99	% Recovery	1	NA	10/16/00
X00408	XG.2000.1155-1	NA	aaa-Trifluorotoluene-PID	ND	% Recovery	1	NA	10/16/00
X00408-026		**GRO**						
X00408	XG.2000.1161-1	NA	4-Bromofluorobenzene-FID	92	% Recovery	1	NA	10/18/00
X00408	XG.2000.1161-1	NA	4-Bromofluorobenzene-PID	ND	% Recovery	1	NA	10/18/00
X00408	XG.2000.1161-1	NA	aaa-Trifluorotoluene-FID	97	% Recovery	1	NA	10/18/00
X00408	XG.2000.1161-1	NA	aaa-Trifluorotoluene-PID	ND	% Recovery	1	NA	10/18/00
X00411-001		**BTEXALL**						
X00411	XG.2000.1164-8	NA	4-Bromofluorobenzene	100	% Recovery	1	NA	10/18/
X00411	XG.2000.1164-8	NA	aaa-Trifluorotoluene	100	% Recovery	1	NA	10/18/

Surrogate Summary: QC

Client: CH2MHILL

Project: 0010162 KAFB

X00411	XG.2000.1164-8	NA	Bromochloromethane	150	% Recovery	1	NA		10/18/00
X00411	XG.2000.1164-8	NA	Bromochloropropane	147	% Recovery	1	NA		10/18/00
X00411	XG.2000.1164-8	NA	Dichlorobutane	60	% Recovery	1	NA		10/18/00
X00411-004		BTEXALL							
X00411	XG.2000.1164-11	NA	4-Bromofluorobenzene	99	% Recovery	1	NA		10/19/00
X00411	XG.2000.1164-11	NA	aaa-Trifluorotoluene	102	% Recovery	1	NA		10/19/00
X00411	XG.2000.1164-11	NA	Bromochloromethane	86	% Recovery	1	NA		10/19/00
X00411	XG.2000.1164-11	NA	Bromochloropropane	19	% Recovery	1	NA		10/19/00
X00411	XG.2000.1164-11	NA	Dichlorobutane	23	% Recovery	1	NA		10/19/00
X00411-008		BTEXALL							
X00411	XG.2000.1177-1	NA	4-Bromofluorobenzene	102	% Recovery	1	NA		10/23/00
X00411	XG.2000.1177-1	NA	aaa-Trifluorotoluene	100	% Recovery	1	NA		10/23/00
X00411	XG.2000.1177-1	NA	Bromochloromethane	102	% Recovery	1	NA		10/23/00
X00411	XG.2000.1177-1	NA	Bromochloropropane	44	% Recovery	1	NA		10/23/00
X00411	XG.2000.1177-1	NA	Dichlorobutane	58	% Recovery	1	NA		10/23/00
X00411-011		BTEXALL							
X00411	XG.2000.1224-1	NA	4-Bromofluorobenzene	99	% Recovery	1	NA		10/31/00
X00411	XG.2000.1224-1	NA	aaa-Trifluorotoluene	100	% Recovery	1	NA		10/31/00
X00411	XG.2000.1224-1	NA	Bromochloromethane	74	% Recovery	1	NA		10/31/00
X00411	XG.2000.1224-1	NA	Bromochloropropane	36	% Recovery	1	NA		10/31/00
X00411	XG.2000.1224-1	NA	Dichlorobutane	44	% Recovery	1	NA		10/31/00
[illegible]11-021		BTEXALL							
[illegible]1	XG.2000.1230-1	NA	4-Bromofluorobenzene	99	% Recovery	1	NA		11/02/00
X00411	XG.2000.1230-1	NA	aaa-Trifluorotoluene	98	% Recovery	1	NA		11/02/00
X00411	XG.2000.1230-1	NA	Bromochloromethane	37	% Recovery	1	NA		11/02/00
X00411	XG.2000.1230-1	NA	Bromochloropropane	115	% Recovery	1	NA		11/02/00
X00411	XG.2000.1230-1	NA	Dichlorobutane	36	% Recovery	1	NA		11/02/00

QC Type **MS** QC Matrix **SOLID**

QC Group	Run Sequence	CAS #	Analyte	Result	Units	Dilution Factor	Detection Limit	Code	Run Date
X00392-005		BTEXALL							
X00392	XG.2000.1112-5	NA	4-Bromofluorobenzene	102	% Recovery	1	NA		10/05/00
X00392	XG.2000.1112-5	NA	aaa-Trifluorotoluene	100	% Recovery	1	NA		10/05/00
X00392	XG.2000.1112-5	NA	Bromochloromethane	ND	% Recovery	1	NA		10/05/00
X00392	XG.2000.1112-5	NA	Bromochloropropane	ND	% Recovery	1	NA		10/05/00
X00392	XG.2000.1112-5	NA	Dichlorobutane	ND	% Recovery	1	NA		10/05/00
X00398-016		8260							
X00398	XG.2000.1158-10	NA	1,2 Dichloroethane-D4 (SS)	91	% Recovery	1	NA		10/17/00
X00398	XG.2000.1206-5	NA	1,2 Dichloroethane-D4 (SS)	91	% Recovery	1	NA		10/17/00
X00398	XG.2000.1158-10	NA	4-Bromofluorobenzene (SS)	100	% Recovery	1	NA		10/17/00
X00398	XG.2000.1206-5	NA	4-Bromofluorobenzene (SS)	100	% Recovery	1	NA		10/17/00
X00398	XG.2000.1158-10	NA	Dibromofluoromethane (SS)	90	% Recovery	1	NA		10/17/00
[illegible]398	XG.2000.1206-5	NA	Dibromofluoromethane (SS)	90	% Recovery	1	NA		10/17/00
[illegible]8	XG.2000.1158-10	NA	Toluene-D8 (SS)	101	% Recovery	1	NA		10/17/00

Surrogate Summary: QC

Client: **CH2MHILL**

Project: **0010162** **KAFB**

X00398	XG.2000.1206-5	NA	Toluene-D8 (SS)	101	% Recovery	1	NA	10/17/00
X00407-005		DRO						
X00407	XG.2000.1150-13	NA	O-terphenyl	102	% Recovery	1	NA	10/17/00
X00408-023		GRO						
X00408	XG.2000.1155-15	NA	4-Bromofluorobenzene-FID	95	% Recovery	1	NA	10/17/00
X00408	XG.2000.1155-15	NA	4-Bromofluorobenzene-PID	ND	% Recovery	1	NA	10/17/00
X00408	XG.2000.1155-15	NA	aaa-Trifluorotoluene-FID	99	% Recovery	1	NA	10/17/00
X00408	XG.2000.1155-15	NA	aaa-Trifluorotoluene-PID	ND	% Recovery	1	NA	10/17/00
X00411-006		BTEXALL						
X00411	XG.2000.1164-13	NA	4-Bromofluorobenzene	102	% Recovery	1	NA	10/19/00
X00411	XG.2000.1164-13	NA	aaa-Trifluorotoluene	104	% Recovery	1	NA	10/19/00
X00411	XG.2000.1164-13	NA	Bromochloromethane	69	% Recovery	1	NA	10/19/00
X00411	XG.2000.1164-13	NA	Bromochloropropane	22	% Recovery	1	NA	10/19/00
X00411	XG.2000.1164-13	NA	Dichlorobutane	22	% Recovery	1	NA	10/19/00

QC Type **MSD** QC Matrix **SOLID**

QC Group	Run Sequence	CAS #	Analyte	Result	Units	Dilution Factor	Detection Limit	Code	Run Date
X00392-006		BTEXALL							
X00392	XG.2000.1112-6	NA	4-Bromofluorobenzene	101	% Recovery	1	NA		10/05/
X00392	XG.2000.1112-6	NA	aaa-Trifluorotoluene	99	% Recovery	1	NA		10/05/00
X00392	XG.2000.1112-6	NA	Bromochloromethane	ND	% Recovery	1	NA		10/05/00
X00392	XG.2000.1112-6	NA	Bromochloropropane	ND	% Recovery	1	NA		10/05/00
X00392	XG.2000.1112-6	NA	Dichlorobutane	ND	% Recovery	1	NA		10/05/00
X00398-017		8260							
X00398	XG.2000.1158-11	NA	1,2 Dichloroethane-D4 (SS)	95	% Recovery	1	NA		10/17/00
X00398	XG.2000.1206-6	NA	1,2 Dichloroethane-D4 (SS)	95	% Recovery	1	NA		10/17/00
X00398	XG.2000.1158-11	NA	4-Bromofluorobenzene (SS)	102	% Recovery	1	NA		10/17/00
X00398	XG.2000.1206-6	NA	4-Bromofluorobenzene (SS)	102	% Recovery	1	NA		10/17/00
X00398	XG.2000.1158-11	NA	Dibromofluoromethane (SS)	89	% Recovery	1	NA		10/17/00
X00398	XG.2000.1206-6	NA	Dibromofluoromethane (SS)	89	% Recovery	1	NA		10/17/00
X00398	XG.2000.1158-11	NA	Toluene-D8 (SS)	101	% Recovery	1	NA		10/17/00
X00398	XG.2000.1206-6	NA	Toluene-D8 (SS)	101	% Recovery	1	NA		10/17/00
X00407-006		DRO							
X00407	XG.2000.1150-14	NA	O-terphenyl	100	% Recovery	1	NA		10/17/00
X00408-024		GRO							
X00408	XG.2000.1155-16	NA	4-Bromofluorobenzene-FID	103	% Recovery	1	NA		10/17/00
X00408	XG.2000.1155-16	NA	4-Bromofluorobenzene-PID	ND	% Recovery	1	NA		10/17/00
X00408	XG.2000.1155-16	NA	aaa-Trifluorotoluene-FID	103	% Recovery	1	NA		10/17/00
X00408	XG.2000.1155-16	NA	aaa-Trifluorotoluene-PID	ND	% Recovery	1	NA		10/17/00
X00411-007		BTEXALL							
X00411	XG.2000.1164-14	NA	4-Bromofluorobenzene	102	% Recovery	1	NA		10/19/00
X00411	XG.2000.1164-14	NA	aaa-Trifluorotoluene	102	% Recovery	1	NA		10/19/0
X00411	XG.2000.1164-14	NA	Bromochloromethane	27	% Recovery	1	NA		10/19/

Surrogate Summary: QC

Client: CH2MHILL

Project: 0010162 KAFB

X00411	XG.2000.1164-14	NA	Bromochloropropane	28	% Recovery	1	NA	10/19/00
X00411	XG.2000.1164-14	NA	Dichlorobutane	66	% Recovery	1	NA	10/19/00

QC Type **LCS** QC Matrix **WATER**

QC Group	Run Sequence	CAS #	Analyte	Result	Units	Dilution Factor	Detection Limit	Code	Run Date
X00404-002		DRO							
X00404	XG.2000.1139-18	NA	O-terphenyl	106	% Recovery	1	NA		10/14/00
X00405-002		GRO							
X00405	XG.2000.1141-11	NA	4-Bromofluorobenzene-FID	99	% Recovery	1	NA		10/16/00
X00405	XG.2000.1141-11	NA	4-Bromofluorobenzene-PID	ND	% Recovery	1	NA		10/16/00
X00405	XG.2000.1141-11	NA	aaa-Trifluorotoluene-FID	102	% Recovery	1	NA		10/16/00
X00405	XG.2000.1141-11	NA	aaa-Trifluorotoluene-PID	ND	% Recovery	1	NA		10/16/00
X00410-008		8260							
X00410	XG.2000.1175-8	NA	1,2 Dichloroethane-D4 (SS)	99	% Recovery	1	NA		10/18/00
X00410	XG.2000.1175-8	NA	4-Bromofluorobenzene (SS)	102	% Recovery	1	NA		10/18/00
X00410	XG.2000.1175-8	NA	Dibromofluoromethane (SS)	101	% Recovery	1	NA		10/18/00
X00410	XG.2000.1175-8	NA	Toluene-D8 (SS)	100	% Recovery	1	NA		10/18/00

QC Type **LCSD** QC Matrix **WATER**

QC Group	Run Sequence	CAS #	Analyte	Result	Units	Dilution Factor	Detection Limit	Code	Run Date
X00404-003		DRO							
X00404	XG.2000.1139-19	NA	O-terphenyl	105	% Recovery	1	NA		10/14/00
X00405-003		GRO							
X00405	XG.2000.1141-12	NA	4-Bromofluorobenzene-FID	99	% Recovery	1	NA		10/16/00
X00405	XG.2000.1141-12	NA	4-Bromofluorobenzene-PID	ND	% Recovery	1	NA		10/16/00
X00405	XG.2000.1141-12	NA	aaa-Trifluorotoluene-FID	103	% Recovery	1	NA		10/16/00
X00405	XG.2000.1141-12	NA	aaa-Trifluorotoluene-PID	ND	% Recovery	1	NA		10/16/00
X00410-009		8260							
X00410	XG.2000.1175-9	NA	1,2 Dichloroethane-D4 (SS)	103	% Recovery	1	NA		10/18/00
X00410	XG.2000.1175-9	NA	4-Bromofluorobenzene (SS)	104	% Recovery	1	NA		10/18/00
X00410	XG.2000.1175-9	NA	Dibromofluoromethane (SS)	102	% Recovery	1	NA		10/18/00
X00410	XG.2000.1175-9	NA	Toluene-D8 (SS)	101	% Recovery	1	NA		10/18/00

QC Type **MB** QC Matrix **WATER**

QC Group	Run Sequence	CAS #	Analyte	Result	Units	Dilution Factor	Detection Limit	Code	Run Date
[illegible]04-001		DRO							
[illegible]04	XG.2000.1139-17	NA	O-terphenyl	84	% Recovery	1	NA		10/14/00

Surrogate Summary: QC

Client: **CH2MHILL**

Project: **0010162** **KAFB**

X00404-008		DRO							
X00404	XG.2000.1150-24	NA	O-terphenyl	87	% Recovery	1	NA		10/17/00
X00404-010		DRO							
X00404	XG.2000.1189-1	NA	O-terphenyl	80	% Recovery	1	NA		10/23/00
X00405-001		GRO							
X00405	XG.2000.1141-10	NA	4-Bromofluorobenzene-FID	88	% Recovery	1	NA		10/16/00
X00405	XG.2000.1141-10	NA	4-Bromofluorobenzene-PID	ND	% Recovery	1	NA		10/16/00
X00405	XG.2000.1141-10	NA	aaa-Trifluorotoluene-FID	96	% Recovery	1	NA		10/16/00
X00405	XG.2000.1141-10	NA	aaa-Trifluorotoluene-PID	ND	% Recovery	1	NA		10/16/00
X00405-008		GRO							
X00405	XG.2000.1161-9	NA	4-Bromofluorobenzene-FID	91	% Recovery	1	NA		10/19/00
X00405	XG.2000.1161-9	NA	4-Bromofluorobenzene-PID	ND	% Recovery	1	NA		10/19/00
X00405	XG.2000.1161-9	NA	aaa-Trifluorotoluene-FID	98	% Recovery	1	NA		10/19/00
X00405	XG.2000.1161-9	NA	aaa-Trifluorotoluene-PID	ND	% Recovery	1	NA		10/19/00
X00405-010		GRO							
X00405	XG.2000.1204-1	NA	4-Bromofluorobenzene-FID	92	% Recovery	1	NA		10/23/00
X00405	XG.2000.1204-1	NA	4-Bromofluorobenzene-PID	ND	% Recovery	1	NA		10/23/00
X00405	XG.2000.1204-1	NA	aaa-Trifluorotoluene-FID	99	% Recovery	1	NA		10/23/00
X00405	XG.2000.1204-1	NA	aaa-Trifluorotoluene-PID	ND	% Recovery	1	NA		10/23/00
X00410-001		8260							
X00410	XG.2000.1175-1	NA	1,2 Dichloroethane-D4 (SS)	90	% Recovery	1	NA		10/18/
X00410	XG.2000.1175-1	NA	4-Bromofluorobenzene (SS)	99	% Recovery	1	NA		10/18/
X00410	XG.2000.1175-1	NA	Dibromofluoromethane (SS)	98	% Recovery	1	NA		10/18/00
X00410	XG.2000.1175-1	NA	Toluene-D8 (SS)	99	% Recovery	1	NA		10/18/00
X00410-023		8260							
X00410	XG.2000.1221-1	NA	1,2 Dichloroethane-D4 (SS)	86	% Recovery	1	NA		10/27/00
X00410	XG.2000.1221-1	NA	4-Bromofluorobenzene (SS)	96	% Recovery	1	NA		10/27/00
X00410	XG.2000.1221-1	NA	Dibromofluoromethane (SS)	97	% Recovery	1	NA		10/27/00
X00410	XG.2000.1221-1	NA	Toluene-D8 (SS)	98	% Recovery	1	NA		10/27/00
X00410-028		8260							
X00410	XG.2000.1221-4	NA	1,2 Dichloroethane-D4 (SS)	91	% Recovery	1	NA		10/30/00
X00410	XG.2000.1221-4	NA	4-Bromofluorobenzene (SS)	98	% Recovery	1	NA		10/30/00
X00410	XG.2000.1221-4	NA	Dibromofluoromethane (SS)	100	% Recovery	1	NA		10/30/00
X00410	XG.2000.1221-4	NA	Toluene-D8 (SS)	100	% Recovery	1	NA		10/30/00

QC Type **MS** QC Matrix **WATER**

QC Group	Run Sequence	CAS #	Analyte	Result	Units	Dilution Factor	Detection Limit	Code	Run Date
X00404-005		DRO							
X00404	XG.2000.1139-21	NA	O-terphenyl	106	% Recovery	1	NA		10/14/00
X00405-005		GRO							
X00405	XG.2000.1141-14	NA	4-Bromofluorobenzene-FID	98	% Recovery	1	NA		10/16/00
X00405	XG.2000.1141-14	NA	4-Bromofluorobenzene-PID	ND	% Recovery	1	NA		10/16

Surrogate Summary: QC

Client: **CH2MHILL**

ect: **0010162** **KAFB**

X00405	XG.2000.1141-14	NA	aaa-Trifluorotoluene-FID	102	% Recovery	1	NA		10/16/00
X00405	XG.2000.1141-14	NA	aaa-Trifluorotoluene-PID	ND	% Recovery	1	NA		10/16/00
X00410-006		**8260**							
X00410	XG.2000.1175-6	NA	1,2 Dichloroethane-D4 (SS)	109	% Recovery	1	NA		10/18/00
X00410	XG.2000.1175-6	NA	4-Bromofluorobenzene (SS)	105	% Recovery	1	NA		10/18/00
X00410	XG.2000.1175-6	NA	Dibromofluoromethane (SS)	103	% Recovery	1	NA		10/18/00
X00410	XG.2000.1175-6	NA	Toluene-D8 (SS)	102	% Recovery	1	NA		10/18/00

QC Type **MSD** QC Matrix **WATER**

QC Group	Run Sequence	CAS #	Analyte	Result	Units	Dilution Factor	Detection Limit	Code	Run Date
X00404-006		**DRO**							
X00404	XG.2000.1139-22	NA	O-terphenyl	104	% Recovery	1	NA		10/14/00
X00405-006		**GRO**							
X00405	XG.2000.1141-15	NA	4-Bromofluorobenzene-FID	98	% Recovery	1	NA		10/16/00
X00405	XG.2000.1141-15	NA	4-Bromofluorobenzene-PID	ND	% Recovery	1	NA		10/16/00
X00405	XG.2000.1141-15	NA	aaa-Trifluorotoluene-FID	103	% Recovery	1	NA		10/16/00
X00405	XG.2000.1141-15	NA	aaa-Trifluorotoluene-PID	ND	% Recovery	1	NA		10/16/00
X00410-007		**8260**							
0	XG.2000.1175-7	NA	1,2 Dichloroethane-D4 (SS)	110	% Recovery	1	NA		10/18/00
10	XG.2000.1175-7	NA	4-Bromofluorobenzene (SS)	105	% Recovery	1	NA		10/18/00
X00410	XG.2000.1175-7	NA	Dibromofluoromethane (SS)	105	% Recovery	1	NA		10/18/00
X00410	XG.2000.1175-7	NA	Toluene-D8 (SS)	103	% Recovery	1	NA		10/18/00

Surrogate Summary: QC

Client: **CH2MHILL**

ect: **0010162** **KAFB**

X00405	XG.2000.1141-14	NA	aaa-Trifluorotoluene-FID	102	% Recovery	1	NA		10/16/00
X00405	XG.2000.1141-14	NA	aaa-Trifluorotoluene-PID	ND	% Recovery	1	NA		10/16/00
X00410-006		**8260**							
X00410	XG.2000.1175-6	NA	1,2 Dichloroethane-D4 (SS)	109	% Recovery	1	NA		10/18/00
X00410	XG.2000.1175-6	NA	4-Bromofluorobenzene (SS)	105	% Recovery	1	NA		10/18/00
X00410	XG.2000.1175-6	NA	Dibromofluoromethane (SS)	103	% Recovery	1	NA		10/18/00
X00410	XG.2000.1175-6	NA	Toluene-D8 (SS)	102	% Recovery	1	NA		10/18/00

QC Type **MSD** QC Matrix **WATER**

QC Group	Run Sequence	CAS #	Analyte	Result	Units	Dilution Factor	Detection Limit	Code	Run Date
X00404-006		**DRO**							
X00404	XG.2000.1139-22	NA	O-terphenyl	104	% Recovery	1	NA		10/14/00
X00405-006		**GRO**							
X00405	XG.2000.1141-15	NA	4-Bromofluorobenzene-FID	98	% Recovery	1	NA		10/16/00
X00405	XG.2000.1141-15	NA	4-Bromofluorobenzene-PID	ND	% Recovery	1	NA		10/16/00
X00405	XG.2000.1141-15	NA	aaa-Trifluorotoluene-FID	103	% Recovery	1	NA		10/16/00
X00405	XG.2000.1141-15	NA	aaa-Trifluorotoluene-PID	ND	% Recovery	1	NA		10/16/00
X00410-007		**8260**							
[illegible]	XG.2000.1175-7	NA	1,2 Dichloroethane-D4 (SS)	110	% Recovery	1	NA		10/18/00
[illegible]	XG.2000.1175-7	NA	4-Bromofluorobenzene (SS)	105	% Recovery	1	NA		10/18/00
X00410	XG.2000.1175-7	NA	Dibromofluoromethane (SS)	105	% Recovery	1	NA		10/18/00
X00410	XG.2000.1175-7	NA	Toluene-D8 (SS)	103	% Recovery	1	NA		10/18/00

Assaigai Analytical Laboratories, Inc.

Surrogate Summary: Fraction

Client: CH2MHILL

Project: 0010162 KAFB

Client Sample ID: **SB-27-205'** Sample Matrix: **SOIL**

QC Group	Run Sequence	CAS #	Analyte	Result	Units	Dilution Factor	Detection Limit	Code	Run Date
0010162-01A		DRO							**X00407-007**
X00407	XG.2000.1150-20	NA	O-terphenyl	88	% Recovery	1	NA		10/17/00
0010162-01A		GRO							**X00408-016**
X00408	XG.2000.1155-11	NA	4-Bromofluorobenzene-FID	101	% Recovery	1	NA		10/17/00
X00408	XG.2000.1155-11	NA	4-Bromofluorobenzene-PID	56	% Recovery	1	NA		10/17/00
X00408	XG.2000.1155-11	NA	aaa-Trifluorotoluene-FID	96	% Recovery	1	NA		10/17/00
X00408	XG.2000.1155-11	NA	aaa-Trifluorotoluene-PID	ND	% Recovery	1	NA		10/17/00
0010162-01B		BTEXALL							**X00392-025**
X00392	XG.2000.1164-5	NA	4-Bromofluorobenzene	106	% Recovery	1	NA		10/18/00
X00392	XG.2000.1164-5	NA	aaa-Trifluorotoluene	104	% Recovery	1	NA		10/18/00
X00392	XG.2000.1164-5	NA	Bromochloromethane	119	% Recovery	1	NA		10/18/00
X00392	XG.2000.1164-5	NA	Bromochloropropane	111	% Recovery	1	NA		10/18/00
X00392	XG.2000.1164-5	NA	Dichlorobutane	52	% Recovery	1	NA		10/18/00

Client Sample ID: **SB-27-205' DUP** Sample Matrix: **SOIL**

QC Group	Run Sequence	CAS #	Analyte	Result	Units	Dilution Factor	Detection Limit	Code	Run Date
0010162-02A		DRO							**X00407-008**
X00407	XG.2000.1150-21	NA	O-terphenyl	89	% Recovery	1	NA		10/17/00
0010162-02A		GRO							**X00408-030**
X00408	XG.2000.1161-5	NA	4-Bromofluorobenzene-FID	96	% Recovery	20	NA		10/18/00
X00408	XG.2000.1161-5	NA	4-Bromofluorobenzene-PID	85	% Recovery	20	NA		10/18/00
X00408	XG.2000.1161-5	NA	aaa-Trifluorotoluene-FID	98	% Recovery	20	NA		10/18/00
X00408	XG.2000.1161-5	NA	aaa-Trifluorotoluene-PID	2	% Recovery	20	NA		10/18/00

Client Sample ID: **SB-27-225'** Sample Matrix: **SOIL**

QC Group	Run Sequence	CAS #	Analyte	Result	Units	Dilution Factor	Detection Limit	Code	Run Date
0010162-03A		DRO							**X00407-009**
X00407	XG.2000.1150-22	NA	O-terphenyl	90	% Recovery	1	NA		10/17/00
0010162-03A		GRO							**X00408-031**
X00408	XG.2000.1161-6	NA	4-Bromofluorobenzene-FID	128	% Recovery	1	NA		10/18/00
X00408	XG.2000.1161-6	NA	4-Bromofluorobenzene-PID	36	% Recovery	1	NA		10/18/00
X00408	XG.2000.1161-6	NA	aaa-Trifluorotoluene-FID	112	% Recovery	1	NA		10/18/00
X00408	XG.2000.1161-6	NA	aaa-Trifluorotoluene-PID	2	% Recovery	1	NA		10/18/00

Surrogate Summary: Fraction

Client: CH2MHILL
Project: 0010162 KAFB

0010162-03B		BTEXALL						X00392-026
X00392	XG.2000.1164-6	NA	4-Bromofluorobenzene	114	% Recovery	1	NA	10/18/00
X00392	XG.2000.1164-6	NA	aaa-Trifluorotoluene	114	% Recovery	1	NA	10/18/00
X00392	XG.2000.1164-6	NA	Bromochloromethane	43	% Recovery	1	NA	10/18/00
X00392	XG.2000.1164-6	NA	Bromochloropropane	103	% Recovery	1	NA	10/18/00
X00392	XG.2000.1164-6	NA	Dichlorobutane	42	% Recovery	1	NA	10/18/00
0010162-03B		BTEXALL						X00411-009
X00411	XG.2000.1177-2	NA	4-Bromofluorobenzene	100	% Recovery	10	NA	10/23/00
X00411	XG.2000.1177-2	NA	aaa-Trifluorotoluene	102	% Recovery	10	NA	10/23/00
X00411	XG.2000.1177-2	NA	Bromochloromethane	71	% Recovery	10	NA	10/23/00
X00411	XG.2000.1177-2	NA	Bromochloropropane	50	% Recovery	10	NA	10/23/00
X00411	XG.2000.1177-2	NA	Dichlorobutane	60	% Recovery	10	NA	10/23/00

Client Sample ID **SB-27-245'** Sample Matrix **SOIL**

QC Group	Run Sequence	CAS #	Analyte	Result	Units	Dilution Factor	Detection Limit	Code	Run Date
0010162-04A		DRO							X00407-010
X00407	XG.2000.1150-23	NA	O-terphenyl	86	% Recovery	1	NA		10/17/00
0010162-04A		GRO							X00408-0[illegible]
X00408	XG.2000.1155-12	NA	4-Bromofluorobenzene-FID	107	% Recovery	1	NA		10/17
X00408	XG.2000.1155-12	NA	4-Bromofluorobenzene-PID	ND	% Recovery	1	NA		10/17/00
X00408	XG.2000.1155-12	NA	aaa-Trifluorotoluene-FID	114	% Recovery	1	NA		10/17/00
X00408	XG.2000.1155-12	NA	aaa-Trifluorotoluene-PID	ND	% Recovery	1	NA		10/17/00
0010162-04B		8260							X00398-019
X00398	XG.2000.1158-13	NA	1,2 Dichloroethane-D4 (SS)	95	% Recovery	10	NA		10/17/00
X00398	XG.2000.1158-13	NA	4-Bromofluorobenzene (SS)	103	% Recovery	10	NA		10/17/00
X00398	XG.2000.1158-13	NA	Dibromofluoromethane (SS)	98	% Recovery	10	NA		10/17/00
X00398	XG.2000.1158-13	NA	Toluene-D8 (SS)	102	% Recovery	10	NA		10/17/00
0010162-04B		8260							X00398-020
X00398	XG.2000.1158-14	NA	1,2 Dichloroethane-D4 (SS)	98	% Recovery	1	NA		10/17/00
X00398	XG.2000.1158-14	NA	4-Bromofluorobenzene (SS)	102	% Recovery	1	NA		10/17/00
X00398	XG.2000.1158-14	NA	Dibromofluoromethane (SS)	100	% Recovery	1	NA		10/17/00
X00398	XG.2000.1158-14	NA	Toluene-D8 (SS)	100	% Recovery	1	NA		10/17/00

Client Sample ID **SB-27-245' DUP** Sample Matrix **SOIL**

QC Group	Run Sequence	CAS #	Analyte	Result	Units	Dilution Factor	Detection Limit	Code	Run Date
0010162-05A		8260							X00398-012
X00398	XG.2000.1158-9	NA	1,2 Dichloroethane-D4 (SS)	94	% Recovery	100	NA		10/17/00
X00398	XG.2000.1158-9	NA	4-Bromofluorobenzene (SS)	100	% Recovery	100	NA		10/17/00
X00398	XG.2000.1158-9	NA	Dibromofluoromethane (SS)	101	% Recovery	100	NA		10/17/00
X00398	XG.2000.1158-9	NA	Toluene-D8 (SS)	103	% Recovery	100	NA		10/17

Surrogate Summary: Fraction

Client: CH2MHILL

Project: 0010162 KAFB

0010162-05A		8260							X00398-026
X00398	XG.2000.1158-20	NA	1,2 Dichloroethane-D4 (SS)	90	% Recovery	1	NA		10/17/00
X00398	XG.2000.1158-20	NA	4-Bromofluorobenzene (SS)	100	% Recovery	1	NA		10/17/00
X00398	XG.2000.1158-20	NA	Dibromofluoromethane (SS)	98	% Recovery	1	NA		10/17/00
X00398	XG.2000.1158-20	NA	Toluene-D8 (SS)	100	% Recovery	1	NA		10/17/00

Client Sample ID **SB-27-265'** Sample Matrix **SOIL**

QC Group	Run Sequence	CAS #	Analyte	Result	Units	Dilution Factor	Detection Limit	Code	Run Date
0010162-06A		DRO							X00407-011
X00407	XG.2000.1150-15	NA	O-terphenyl	89	% Recovery	1	NA		10/17/00
0010162-06A		GRO							X00408-020
X00408	XG.2000.1155-13	NA	4-Bromofluorobenzene-FID	106	% Recovery	1	NA		10/17/00
X00408	XG.2000.1155-13	NA	4-Bromofluorobenzene-PID	ND	% Recovery	1	NA		10/17/00
X00408	XG.2000.1155-13	NA	aaa-Trifluorotoluene-FID	101	% Recovery	1	NA		10/17/00
X00408	XG.2000.1155-13	NA	aaa-Trifluorotoluene-PID	ND	% Recovery	1	NA		10/17/00
0010162-06B		8260							X00398-027
X00398	XG.2000.1205-2	NA	1,2 Dichloroethane-D4 (SS)	89	% Recovery	1	NA		10/17/00
X00398	XG.2000.1205-2	NA	4-Bromofluorobenzene (SS)	97	% Recovery	1	NA		10/17/00
[illegible]3	XG.2000.1205-2	NA	Dibromofluoromethane (SS)	92	% Recovery	1	NA		10/17/00
X00398	XG.2000.1205-2	NA	Toluene-D8 (SS)	101	% Recovery	1	NA		10/17/00
0010162-06B		8260							X00398-031
X00398	XG.2000.1205-4	NA	1,2 Dichloroethane-D4 (SS)	87	% Recovery	1	NA		10/26/00
X00398	XG.2000.1205-4	NA	4-Bromofluorobenzene (SS)	95	% Recovery	1	NA		10/26/00
X00398	XG.2000.1205-4	NA	Dibromofluoromethane (SS)	97	% Recovery	1	NA		10/26/00
X00398	XG.2000.1205-4	NA	Toluene-D8 (SS)	99	% Recovery	1	NA		10/26/00
0010162-06C		8270							X00406-009
X00406	XG.2000.1171-9	NA	*2,4,6-TRIBROMOPHENOL	88	% Recovery	1	NA		10/17/00
X00406	XG.2000.1171-9	NA	*2-FLUOROBIPHENYL	85	% Recovery	1	NA		10/17/00
X00406	XG.2000.1171-9	NA	*2-FLUOROPHENOL	83	% Recovery	1	NA		10/17/00
X00406	XG.2000.1171-9	NA	*NITROBENZENE-D5	84	% Recovery	1	NA		10/17/00
X00406	XG.2000.1171-9	NA	*PHENOL-D6	84	% Recovery	1	NA		10/17/00
X00406	XG.2000.1171-9	NA	*TERPHENYL-D14	92	% Recovery	1	NA		10/17/00

Client Sample ID **SB-27-265' DUP** Sample Matrix **SOIL**

QC Group	Run Sequence	CAS #	Analyte	Result	Units	Dilution Factor	Detection Limit	Code	Run Date
0010162-07A		8270							X00406-007
X00406	XG.2000.1171-7	NA	*2,4,6-TRIBROMOPHENOL	88	% Recovery	1	NA		10/17/00
X00406	XG.2000.1171-7	NA	*2-FLUOROBIPHENYL	86	% Recovery	1	NA		10/17/00
[illegible]06	XG.2000.1171-7	NA	*2-FLUOROPHENOL	82	% Recovery	1	NA		10/17/00
[illegible]06	XG.2000.1171-7	NA	*NITROBENZENE-D5	84	% Recovery	1	NA		10/17/00

Surrogate Summary: Fraction

Client: **CH2MHILL**

Project: **0010162** **KAFB**

X00406	XG.2000.1171-7	NA	*PHENOL-D6	84	% Recovery	1	NA		10/17/00
X00406	XG.2000.1171-7	NA	*TERPHENYL-D14	95	% Recovery	1	NA		10/17/00

Client Sample ID **EQUIP RINSE 2** Sample Matrix **H2O**

QC Group	Run Sequence	CAS #	Analyte	Result	Units	Dilution Factor	Detection Limit	Code	Run Date
0010162-08A		DRO							**X00404-009**
X00404	XG.2000.1150-25	NA	O-terphenyl	93	% Recovery	1	NA		10/17/00
0010162-08A		GRO							**X00405-009**
X00405	XG.2000.1161-10	NA	4-Bromofluorobenzene-FID	92	% Recovery	1	NA		10/19/00
X00405	XG.2000.1161-10	NA	4-Bromofluorobenzene-PID	ND	% Recovery	1	NA		10/19/00
X00405	XG.2000.1161-10	NA	aaa-Trifluorotoluene-FID	98	% Recovery	1	NA		10/19/00
X00405	XG.2000.1161-10	NA	aaa-Trifluorotoluene-PID	ND	% Recovery	1	NA		10/19/00
0010162-08B		8260							**X00410-005**
X00410	XG.2000.1175-5	NA	1,2 Dichloroethane-D4 (SS)	112	% Recovery	1	NA		10/18/00
X00410	XG.2000.1175-5	NA	4-Bromofluorobenzene (SS)	106	% Recovery	1	NA		10/18/00
X00410	XG.2000.1175-5	NA	Dibromofluoromethane (SS)	104	% Recovery	1	NA		10/18/00
X00410	XG.2000.1175-5	NA	Toluene-D8 (SS)	102	% Recovery	1	NA		10/18/00

Client Sample ID **SB-27-285'** Sample Matrix **SOIL**

QC Group	Run Sequence	CAS #	Analyte	Result	Units	Dilution Factor	Detection Limit	Code	Run Date
0010162-09A		DRO							**X00407-012**
X00407	XG.2000.1150-16	NA	O-terphenyl	91	% Recovery	1	NA		10/17/00
0010162-09A		GRO							**X00408-011**
X00408	XG.2000.1155-14	NA	4-Bromofluorobenzene-FID	92	% Recovery	1	NA		10/17/00
X00408	XG.2000.1155-14	NA	4-Bromofluorobenzene-PID	ND	% Recovery	1	NA		10/17/00
X00408	XG.2000.1155-14	NA	aaa-Trifluorotoluene-FID	98	% Recovery	1	NA		10/17/00
X00408	XG.2000.1155-14	NA	aaa-Trifluorotoluene-PID	ND	% Recovery	1	NA		10/17/00
0010162-09B		8260							**X00398-011**
X00398	XG.2000.1158-15	NA	1,2 Dichloroethane-D4 (SS)	93	% Recovery	1	NA		10/17/00
X00398	XG.2000.1158-15	NA	4-Bromofluorobenzene (SS)	101	% Recovery	1	NA		10/17/00
X00398	XG.2000.1158-15	NA	Dibromofluoromethane (SS)	90	% Recovery	1	NA		10/17/00
X00398	XG.2000.1158-15	NA	Toluene-D8 (SS)	99	% Recovery	1	NA		10/17/00
0010162-09C		8270							**X00406-008**
X00406	XG.2000.1171-8	NA	*2,4,6-TRIBROMOPHENOL	88	% Recovery	1	NA		10/17/00
X00406	XG.2000.1171-8	NA	*2-FLUOROBIPHENYL	84	% Recovery	1	NA		10/17/00
X00406	XG.2000.1171-8	NA	*2-FLUOROPHENOL	80	% Recovery	1	NA		10/17/00
X00406	XG.2000.1171-8	NA	*NITROBENZENE-D5	82	% Recovery	1	NA		10/17/00
X00406	XG.2000.1171-8	NA	*PHENOL-D6	81	% Recovery	1	NA		10/17/00
X00406	XG.2000.1171-8	NA	*TERPHENYL-D14	95	% Recovery	1	NA		10/17/00

Surrogate Summary: Fraction

Client: **CH2MHILL**

Project: **0010162 KAFB**

Client Sample ID: **SB-27-305'** Sample Matrix: **SOIL**

QC Group	Run Sequence	CAS #	Analyte	Result	Units	Dilution Factor	Detection Limit	Code	Run Date
0010162-10A		DRO							**X00407-013**
X00407	XG.2000.1150-17	NA	O-terphenyl	85	% Recovery	1	NA		10/17/00
0010162-10A		GRO							**X00408-025**
X00408	XG.2000.1155-17	NA	4-Bromofluorobenzene-FID	92	% Recovery	1	NA		10/17/00
X00408	XG.2000.1155-17	NA	4-Bromofluorobenzene-PID	ND	% Recovery	1	NA		10/17/00
X00408	XG.2000.1155-17	NA	aaa-Trifluorotoluene-FID	98	% Recovery	1	NA		10/17/00
X00408	XG.2000.1155-17	NA	aaa-Trifluorotoluene-PID	ND	% Recovery	1	NA		10/17/00
0010162-10B		BTEXALL							**X00392-027**
X00392	XG.2000.1164-7	NA	4-Bromofluorobenzene	100	% Recovery	1	NA		10/18/00
X00392	XG.2000.1164-7	NA	aaa-Trifluorotoluene	103	% Recovery	1	NA		10/18/00
X00392	XG.2000.1164-7	NA	Bromochloromethane	ND	% Recovery	1	NA		10/18/00
X00392	XG.2000.1164-7	NA	Bromochloropropane	ND	% Recovery	1	NA		10/18/00
X00392	XG.2000.1164-7	NA	Dichlorobutane	ND	% Recovery	1	NA		10/18/00

Client Sample ID: **TRIP** Sample Matrix: **H2O**

QC Group	Run Sequence	CAS #	Analyte	Result	Units	Dilution Factor	Detection Limit	Code	Run Date
0010162-11A		8260							**X00410-004**
X00410	XG.2000.1175-4	NA	1,2 Dichloroethane-D4 (SS)	108	% Recovery	1	NA		10/18/00
X00410	XG.2000.1175-4	NA	4-Bromofluorobenzene (SS)	104	% Recovery	1	NA		10/18/00
X00410	XG.2000.1175-4	NA	Dibromofluoromethane (SS)	104	% Recovery	1	NA		10/18/00
X00410	XG.2000.1175-4	NA	Toluene-D8 (SS)	103	% Recovery	1	NA		10/18/00

A IGAI ANALYTICAL LABORATORIES, INC.

Chain of Custody Record

7300 JEFFERSON N.E.
ALBUQUERQUE, NEW MEXICO 871
(505) 345-8964

3332 WEDGEWOOD
EL PASO, TEXAS 79925
(915) 593-6000

127 EASTGATE DRIVE, 212-C
LOS ALAMOS, NEW MEXICO 87544
(505) 662-2558

Lab job No.: 00 10162 Date _____

Page 1 of _____

Client: CH2M HILL

Address: 6001 Indian School Rd NE #350

City / State / Zip: Alb NM 87110

Project Name / Number: KAFB

Contract / Purchase Order / Quote: _____

Project Manager / Contact: B. LEFEVRE / A. HALLORAN

Telephone No.: 884-5600

Fax No.: 883 7507

Samplers : (signature): [signature]

Analysis Required

AAL Fraction Number	Field Sample Number / Location	Date	Time	Sample Type	Type / Size of Container	Preservation Temp.	Preservation Chemical	No. of Containers	DRO/GRO (8015)	VOC 8260	BTEX	SVOC 8270						Remarks
01 AB	SB-27-205'	10/13	1648	Soil	4 oz VOA	ICE	NO	2	X		X							
02A	SB-27 205' DUP	10/13	1648	Soil	4 oz VOA	ICE	NO	1	X									
03 AB	SB-27-225'	10/13	1805	Soil	4 oz VOA	ICE	NO	2	X		X							
04 AB	SB-27-245'	10/14	915	Soil	4 oz VOA	ICE	NO	2	X	X								
05A	SB-27-245' DUP	10/14	915	Soil	4 oz VOA	ICE	NO	1		X								
06ABC	SB-27-265'	10/14	1040	Soil	4 oz VOA + 8 oz	ICE	NO	3	X	X		X						
07A	SB-27-265' DUP	10/14	1040	Soil	8 oz	ICE	NO	1				X						
08AB	[illegible]	10/14	1450	H2O	40 mL VOA	ICE	HCL	4	X	X								—
09ABC	[illegible]	10/14	1550	Soil	4 oz VOA + [illegible]	ICE	NO	3	X		X	X						
10AB	[illegible]	11/14	1545	Soil	4 oz VOA	ICE	NO	2	X		X							
11A	TRIP	10/14	1545	H2O	40 mL VOA	ICE	HCL	1		X								—

Relinquished by:	Date	Received by:	Relinquished by:	Date	Received by:
Signature _____	10/14/00	Signature [illegible]	Signature [signature]	11/14	Signature [illegible]
Printed _____	Time	Printed _____	Printed Wm J LEFEVRE	Time	Printed [illegible]
Company _____	1613	Company _____	Company CH2M HILL	1615	Company AAL
Reason _____		Reason _____	Reason XFR to LAB		Reason [illegible]

Method of Shipment: _____

Shipment No. _____

Special Instructions: _____

Comments: 4°C Upon receipt at lab 1635 10/14/00

After analysis, samples are to be:

- ☐ Disposed of (additional fee)
- ☐ Stored (30 days max)
- ☐ Stored over 30 days (additional fee)
- ☐ Returned to customer

COURIER

ASSAIGAI ANALYTICAL LABORATORIES, INC.
7300 Jefferson, NE • Albuquerque, New Mexico 87109 • (505) 345-8964 • FAX (505) 345-7259
3332 Wedgewood Dr., Suite N • El Paso, Texas 79925 • (915) 593-6000 • FAX (915) 593-7820
127 Eastgate Drive, 212-C • Los Alamos, New Mexico 87544 • (505) 662-2558

RECEIVED NOV 3 0 2000

Explanation of codes	
B	analyte detected in Method Blank
E	result is estimated
H	analyzed out of hold time
N	tentatively identified compound
S	subcontracted
1-9	see footnote

CH2MHILL
attn: AMY HALLORAN
6001 INDIAN SCHOOL RD NE STE 350
ALBUQUERQUE, NM 87110-4140

Assaigai Analytical Laboratories, Inc.

Certificate of Analysis

REVISED 11/1/00 437 W

Client: **CH2MHILL**
Project: **0010161** **KAFB ST-106**

William P. Biava: President of Assaigai Analytical Laboratories, Inc.

Client Sample ID ***SB-27-345'*** Sample Matrix ***SOIL*** Sample Collected ***10/15/00 12:00:00***

QC Group	Run Sequence	CAS #	Analyte	Result	Units	Dilution Factor	Detection Limit	Code	Run Date
0010161-01A		**SW846 5030A/8015A GRO by GC/FID**							
X00408	XG.2000.1155-10		Gasoline Range Organics	ND	mg / Kg	1	0.25		10/17/00
0010161-01A		**SW846 ME/8015A Diesel Range Organics by GC/FID**							
X00407	XG.2000.1150-12		Diesel Range Organics	ND	mg / Kg	1	25		10/17/00
0010161-01B		**SW846 5030A/8021B Purgeable VOCs by GC/PID**							
X00411	XG.2000.1164-12	71-43-2	Benzene	ND	mg / Kg	1	0.005		10/19/00
X00411	XG.2000.1164-12	100-41-4	Ethylbenzene	ND	mg / Kg	1	0.005		10/19/00
X00411	XG.2000.1164-12	95-47-6	o-Xylene	ND	mg / Kg	1	0.005		10/19/00
X00411	XG.2000.1164-12	108-38-3/106-42	p/m-Xylenes	ND	mg / Kg	1	0.01		10/19/00
X00411	XG.2000.1177-3	108-88-3	Toluene	ND	mg / Kg	1	0.005		10/23/00

Client Sample ID ***TRIP*** Sample Matrix ***H2O*** Sample Collected ***10/15/00 12:00:00***

QC Group	Run Sequence	CAS #	Analyte	Result	Units	Dilution Factor	Detection Limit	Code	Run Date
0010161-02A		**SW846 8260A Purgeable VOCs by GC/MS**							
X00388	XG.2000.1160-15	75-34-3	1,1 Dichloroethane	ND	ug / L	1	1	1	10/18/00
X00388	XG.2000.1160-15	75-34-3	1,1 Dichloroethene	ND	ug / L	1	1	1	10/18/00
X00388	XG.2000.1160-15	71-55-6	1,1,1 Trichloroethane	ND	ug / L	1	1	1	10/18/00

Member: American Council of Independent Laboratories, Inc.

REPRODUCTION OF THIS REPORT IN LESS THAN FULL REQUIRES THE WRITTEN CONSENT OF AAL. THIS REPORT MAY NOT BE USED IN ANY MANNER BY THE CLIENT OR ANY OTHER THIRD PARTY TO CLAIM PRODUCT ENDORSEMENT BY ANY ACCREDITATION PROGRAM.

Certificate of Analysis

Client: CH2MHILL

Project: 0010161 KAFB ST-106

X00388	XG.2000.1160-15	630-20-6	1,1,1,2 Tetrachloroethane	ND	ug / L	1	1	1	10/18/00
X00388	XG.2000.1160-15	79-00-5	1,1,2 Trichloroethane	ND	ug / L	1	1	1	10/18/00
X00388	XG.2000.1160-15	79-34-5	1,1,2,2 Tetrachloroethane	ND	ug / L	1	1	1	10/18/00
X00388	XG.2000.1160-15	106-93-4	1,2 Dibromoethane (EDB)	ND	ug / L	1	1	1	10/18/00
X00388	XG.2000.1160-15	95-50-1	1,2 Dichlorobenzene	ND	ug / L	1	1	1	10/18/00
X00388	XG.2000.1160-15	107-06-2	1,2 Dichloroethane	ND	ug / L	1	1	1	10/18/00
X00388	XG.2000.1160-15	78-87-5	1,2 Dichloropropane	ND	ug / L	1	1	1	10/18/00
X00388	XG.2000.1160-15	96-18-4	1,2,3 Trichloropropane	ND	ug / L	1	1	1	10/18/00
X00388	XG.2000.1160-15	95-63-6	1,2,4-Trimethylbenzene	ND	ug / L	1	1	1	10/18/00
X00388	XG.2000.1160-15	541-73-1	1,3 Dichlorobenzene	ND	ug / L	1	1	1	10/18/00
X00388	XG.2000.1160-15	108-67-8	1,3,5-Trimethylbenzene	ND	ug / L	1	1	1	10/18/00
X00388	XG.2000.1160-15	764-41-0	1,4 Dichloro-2-butene	ND	ug / L	1	10	1	10/18/00
X00388	XG.2000.1160-15	106-46-7	1,4 Dichlorobenzene	ND	ug / L	1	1	1	10/18/00
X00388	XG.2000.1160-15	78-93-3	2-Butanone (MEK)	ND	ug / L	1	5	1	10/18/00
X00388	XG.2000.1160-15	110-75-8	2-Chloroethylvinylether	ND	ug / L	1	5	1	10/18/00
X00388	XG.2000.1160-15	591-78-6	2-Hexanone (MBK)	ND	ug / L	1	5	1	10/18/00
X00388	XG.2000.1160-15	108-10-1	4-Methyl-2-pentanone (MIBK)	ND	ug / L	1	5	1	10/18/00
X00388	XG.2000.1160-15	67-64-1	Acetone	ND	ug / L	1	10	1	10/18/00
X00388	XG.2000.1160-15	107-02-8	Acrolein	ND	ug / L	1	20	1	10/18/00
X00388	XG.2000.1160-15	107-13-1	Acrylonitrile	ND	ug / L	1	20	1	10/18/00
X00388	XG.2000.1160-15	71-43-2	Benzene	ND	ug / L	1	1	1	10/18/00
X00388	XG.2000.1160-15	75-27-4	Bromodichloromethane	ND	ug / L	1	1	1	10/18/00
X00388	XG.2000.1160-15	75-25-2	Bromoform	ND	ug / L	1	1	1	10/1[illegible]
X00388	XG.2000.1160-15	74-83-9	Bromomethane	ND	ug / L	1	5	1	10/18/[illegible]
X00388	XG.2000.1160-15	75-15-0	Carbon disulfide	ND	ug / L	1	5	1	10/18/00
X00388	XG.2000.1160-15	56-23-5	Carbon tetrachloride	ND	ug / L	1	1	1	10/18/00
X00388	XG.2000.1160-15	108-90-7	Chlorobenzene	ND	ug / L	1	1	1	10/18/00
X00388	XG.2000.1160-15	124-48-1	Chlorodibromomethane	ND	ug / L	1	1	1	10/18/00
X00388	XG.2000.1160-15	75-00-3	Chloroethane	ND	ug / L	1	5	1	10/18/00
X00388	XG.2000.1160-15	67-66-3	Chloroform	ND	ug / L	1	1	1	10/18/00
X00388	XG.2000.1160-15	74-87-3	Chloromethane	ND	ug / L	1	5	1	10/18/00
X00388	XG.2000.1160-15	156-59-2	cis-1,2 dichloroethene	ND	ug / L	1	1	1	10/18/00
X00388	XG.2000.1160-15	10061-01-5	cis-1,3 dichloropropene	ND	ug / L	1	1	1	10/18/00
X00388	XG.2000.1160-15	74-95-3	Dibromomethane	ND	ug / L	1	1	1	10/18/00
X00388	XG.2000.1160-15	97-63-2	Ethyl methacrylate	ND	ug / L	1	5	1	10/18/00
X00388	XG.2000.1160-15	100-41-4	Ethylbenzene	ND	ug / L	1	1	1	10/18/00
X00388	XG.2000.1160-15		Freon 113	ND	ug / L	1	5	1	10/18/00
X00388	XG.2000.1160-15	75-71-8	Freon 12	ND	ug / L	1	10	1	10/18/00
X00388	XG.2000.1160-15	74-88-4	Iodomethane	ND	ug / L	1	5	1	10/18/00
X00388	XG.2000.1160-15	1634-04-4	Methyl t-butyl ether (MTBE)	ND	ug / L	1	1	1	10/18/00
X00388	XG.2000.1160-15	75-09-2	Methylene chloride	ND	ug / L	1	10	1	10/18/00
X00388	XG.2000.1160-15	91-20-3	Naphthalene	ND	ug / L	1	5	1	10/18/00
X00388	XG.2000.1160-15	95-47-6	o-Xylene	ND	ug / L	1	1	1	10/18/00
X00388	XG.2000.1160-15	108-38-3/106-42	p/m Xylenes	ND	ug / L	1	2	1	10/18/00
X00388	XG.2000.1160-15	100-42-5	Styrene	ND	ug / L	1	1	1	10/18/00
X00388	XG.2000.1160-15	156-60-5	t-1,2 Dichloroethene	ND	ug / L	1	1	1	10/18/00
X00388	XG.2000.1160-15	10061-02-6	t-1,3 Dichloropropene	ND	ug / L	1	1	1	10/18/00
X00388	XG.2000.1160-15	127-18-4	Tetrachloroethene	ND	ug / L	1	1	1	10/18[illegible]

Certificate of Analysis

Client: CH2MHILL

Project: 0010161 KAFB ST-106

X00386	XG.2000.1160-15	108-88-3	Toluene	ND	ug / L	1	1	1	10/18/00
X00386	XG.2000.1160-15	79-01-6	Trichloroethene	ND	ug / L	1	1	1	10/18/00
X00386	XG.2000.1160-15	75-69-4	Trichlorofluoromethane	ND	ug / L	1	5	1	10/18/00
X00386	XG.2000.1160-15	108-05-4	Vinyl acetate	ND	ug / L	1	5	1	10/18/00
X00386	XG.2000.1160-15	75-01-4	Vinyl chloride	ND	ug / L	1	5	1	10/18/00

**** Sample specific Detection Limit is determined by multiplying the sample Dilution Factor by the listed Reporting Detection Limit. ****

**** ND = Not detected: less than the sample specific Detection Limit. Results relate only to the items tested. ****

footnote [1] Sample had headspace at the time of analysis.

ASSAIGAI ANALYTICAL LABORATORIES, INC.

Chain of Custody Record

7300 JEFFERSON N.E.
ALBUQUERQUE, NEW MEXICO
(505) 345-8964

3332 WEDGEWOOD
EL PASO, TEXAS 79925
(915) 593-6000

127 EASTGATE DRIVE, 212-C
LOS ALAMOS, NEW MEXICO 87544
(505) 662-2558

Lab Job No.: 001016 Date

Page 1 of 1

Client CH2M Hill

Address 6001 Indian School Rd NE #350

City / State / Zip ABQ NM 87110

Project Name / Number KAFB ST 106

Contract / Purchase Order / Quote

Project Manager / Contact B LEFEVRE / A HALLORAN

Telephone No. 884 5600

Fax No. 883 7507

Samplers : (signature) [signature]

AAL Fraction Number	Field Sample Number / Location	Date	Time	Sample Type	Type / Size of Container	Preservation Temp.	Preservation Chemical	No. of Containers	GRO/DRO 8015	BTEX	VOC							Remarks
01AB	SB-27-345	10/15	1200	Soil	4 oz VOA	ICE	NO	2	X	X								
02A	TRIP	10/15	1200	H2O	40 mL VOA	ICE	HCl	1			X							

Analysis Required

Relinquished by:	Date	Received by:	Relinquished by:	Date	Received by:
Signature [signature]	10/16/00	Signature [signature]	Signature		Signature
Printed Wm B LEFEVRE	Time 8:35	Printed A BRAZIL	Printed	Time	Printed
Company CH2M HILL		Company Assaigai	Company		Company
Reason XFER to LAB courier		Reason analysis	Reason		Reason

Method of Shipment:

Shipment No.

Special Instructions:

Comments:

After analysis, samples are to be:

- ☐ Disposed of (additional fee)
- ☐ Stored (30 days max)
- ☐ Stored over 30 days (additional fee)
- ☐ Returned to customer

ASSAIGAI PROJECT FILE

ASSAIGAI
ANALYTICAL
LABORATORIES, INC.
7300 Jefferson, NE • Albuquerque, New Mexico 87109 • (505) 345-8964 • FAX (505) 345-7259
3332 Wedgewood Dr., Suite N • El Paso, Texas 79925 • (915) 593-6000 • FAX (915) 593-7820
127 Eastgate Drive, 212-C • Los Alamos, New Mexico 87544 • (505) 662-255

Explanation of codes

B	*analyte detected in Method Blank*
E	*result is estimated*
H	*analyzed out of hold time*
N	*tentatively identified compound*
S	*subcontracted*
1-9	*see footnote*

CH2MHILL
attn: **AMY HALLORAN**
6001 INDIAN SCHOOL RD NE STE 350
ALBUQUERQUE, NM 87110-4140

Assaigai Analytical Laboratories, Inc.

Certificate of Analysis

Client: **CH2MHILL**
Project: **0010161** **KAFB ST-106**

William P. Biava: President of Assaigai Analytical Laboratories, Inc.

Client Sample ID ***SB-27-345'*** Sample Matrix ***SOIL*** Sample Collected ***10/15/00 12:00:00***

QC Group	Run Sequence	CAS #	Analyte	Result	Units	Dilution Factor	Detection Limit	Code	Run Date
0010161-01A		**SW846 5030A/8015A GRO by GC/FID**							
X00408	XG.2000.1155-10		Gasoline Range Organics	ND	mg / Kg	1	0.25		10/17/00
0010161-01A		**SW846 ME/8015A Diesel Range Organics by GC/FID**							
X00407	XG.2000.1150-12		Diesel Range Organics	ND	mg / Kg	1	25		10/17/00
0010161-01B		**SW846 5030A/8021B Purgeable VOCs by GC/PID**							
X00411	XG.2000.1164-12	71-43-2	Benzene	ND	mg / Kg	1	0.005		10/19/00
X00411	XG.2000.1164-12	100-41-4	Ethylbenzene	ND	mg / Kg	1	0.005		10/19/00
X00411	XG.2000.1164-12	95-47-6	o-Xylene	ND	mg / Kg	1	0.005		10/19/00
X00411	XG.2000.1164-12	108-38-3/106-42	p/m-Xylenes	ND	mg / Kg	1	0.01		10/19/00
X00411	XG.2000.1164-12	108-88-3	Toluene	0.007	mg / Kg	1	0.005		10/19/00
X00411	XG.2000.1177-3	108-88-3	Toluene	ND	mg / Kg	1	0.005		10/23/00

Client Sample ID ***TRIP*** Sample Matrix ***H2O*** Sample Collected ***10/15/00 12:00:00***

QC Group	Run Sequence	CAS #	Analyte	Result	Units	Dilution Factor	Detection Limit	Code	Run Date
0010161-02A		**SW846 8260A Purgeable VOCs by GC/MS**							
X00388	XG.2000.1160-15	75-34-3	1,1 Dichloroethane	ND	ug / L	1	1	1	10/18/00
38	XG.2000.1160-15	75-34-3	1,1 Dichloroethene	ND	ug / L	1	1	1	10/18/00

Member:
American Council of
Independent Laboratories, Inc

REPRODUCTION OF THIS REPORT IN LESS THAN FULL REQUIRES THE WRITTEN CONSENT OF AAL.
THIS REPORT MAY NOT BE USED IN ANY MANNER BY THE CLIENT OR ANY OTHER THIRD PARTY TO CLAIM
PRODUCT ENDORSEMENT BY ANY ACCREDITATION PROGRAM.

Certificate of Analysis

Client: CH2MHILL

Project: 0010161 KAFB ST-106

X00388	XG.2000.1160-15	71-55-6	1,1,1 Trichloroethane	ND	ug / L	1	1	1	10/18/00
X00388	XG.2000.1160-15	630-20-6	1,1,1,2 Tetrachloroethane	ND	ug / L	1	1	1	10/18/00
X00388	XG.2000.1160-15	79-00-5	1,1,2 Trichloroethane	ND	ug / L	1	1	1	10/18/00
X00388	XG.2000.1160-15	79-34-5	1,1,2,2 Tetrachloroethane	ND	ug / L	1	1	1	10/18/00
X00388	XG.2000.1160-15	106-93-4	1,2 Dibromoethane (EDB)	ND	ug / L	1	1	1	10/18/00
X00388	XG.2000.1160-15	95-50-1	1,2 Dichlorobenzene	ND	ug / L	1	1	1	10/18/00
X00388	XG.2000.1160-15	107-06-2	1,2 Dichloroethane	ND	ug / L	1	1	1	10/18/00
X00388	XG.2000.1160-15	78-87-5	1,2 Dichloropropane	ND	ug / L	1	1	1	10/18/00
X00388	XG.2000.1160-15	96-18-4	1,2,3 Trichloropropane	ND	ug / L	1	1	1	10/18/00
X00388	XG.2000.1160-15	95-63-6	1,2,4-Trimethylbenzene	ND	ug / L	1	1	1	10/18/00
X00388	XG.2000.1160-15	541-73-1	1,3 Dichlorobenzene	ND	ug / L	1	1	1	10/18/00
X00388	XG.2000.1160-15	108-67-8	1,3,5-Trimethylbenzene	ND	ug / L	1	1	1	10/18/00
X00388	XG.2000.1160-15	764-41-0	1,4 Dichloro-2-butene	ND	ug / L	1	10	1	10/18/00
X00388	XG.2000.1160-15	106-46-7	1,4 Dichlorobenzene	ND	ug / L	1	1	1	10/18/00
X00388	XG.2000.1160-15	78-93-3	2-Butanone (MEK)	ND	ug / L	1	5	1	10/18/00
X00388	XG.2000.1160-15	110-75-8	2-Chloroethylvinylether	ND	ug / L	1	5	1	10/18/00
X00388	XG.2000.1160-15	591-78-6	2-Hexanone (MBK)	ND	ug / L	1	5	1	10/18/00
X00388	XG.2000.1160-15	108-10-1	4-Methyl-2-pentanone (MIBK)	ND	ug / L	1	5	1	10/18/00
X00388	XG.2000.1160-15	67-64-1	Acetone	ND	ug / L	1	10	1	10/18/00
X00388	XG.2000.1160-15	107-02-8	Acrolein	ND	ug / L	1	20	1	10/18/00
X00388	XG.2000.1160-15	107-13-1	Acrylonitrile	ND	ug / L	1	20	1	10/18/00
X00388	XG.2000.1160-15	71-43-2	Benzene	ND	ug / L	1	1	1	10/18/00
X00388	XG.2000.1160-15	75-27-4	Bromodichloromethane	ND	ug / L	1	1	1	10/1[illegible]
X00388	XG.2000.1160-15	75-25-2	Bromoform	ND	ug / L	1	1	1	10/18/[illegible]
X00388	XG.2000.1160-15	74-83-9	Bromomethane	ND	ug / L	1	5	1	10/18/00
X00388	XG.2000.1160-15	75-15-0	Carbon disulfide	ND	ug / L	1	5	1	10/18/00
X00388	XG.2000.1160-15	56-23-5	Carbon tetrachloride	ND	ug / L	1	1	1	10/18/00
X00388	XG.2000.1160-15	108-90-7	Chlorobenzene	ND	ug / L	1	1	1	10/18/00
X00388	XG.2000.1160-15	124-48-1	Chlorodibromomethane	ND	ug / L	1	1	1	10/18/00
X00388	XG.2000.1160-15	75-00-3	Chloroethane	ND	ug / L	1	5	1	10/18/00
X00388	XG.2000.1160-15	67-66-3	Chloroform	ND	ug / L	1	1	1	10/18/00
X00388	XG.2000.1160-15	74-87-3	Chloromethane	ND	ug / L	1	5	1	10/18/00
X00388	XG.2000.1160-15	156-59-2	cis-1,2 dichloroethene	ND	ug / L	1	1	1	10/18/00
X00388	XG.2000.1160-15	10061-01-5	cis-1,3 dichloropropene	ND	ug / L	1	1	1	10/18/00
X00388	XG.2000.1160-15	74-95-3	Dibromomethane	ND	ug / L	1	1	1	10/18/00
X00388	XG.2000.1160-15	97-63-2	Ethyl methacrylate	ND	ug / L	1	5	1	10/18/00
X00388	XG.2000.1160-15	100-41-4	Ethylbenzene	ND	ug / L	1	1	1	10/18/00
X00388	XG.2000.1160-15		Freon 113	ND	ug / L	1	5	1	10/18/00
X00388	XG.2000.1160-15	75-71-8	Freon 12	ND	ug / L	1	10	1	10/18/00
X00388	XG.2000.1160-15	74-88-4	Iodomethane	ND	ug / L	1	5	1	10/18/00
X00388	XG.2000.1160-15	1634-04-4	Methyl t-butyl ether (MTBE)	ND	ug / L	1	1	1	10/18/00
X00388	XG.2000.1160-15	75-09-2	Methylene chloride	ND	ug / L	1	10	1	10/18/00
X00388	XG.2000.1160-15	91-20-3	Naphthalene	ND	ug / L	1	5	1	10/18/00
X00388	XG.2000.1160-15	95-47-6	o-Xylene	ND	ug / L	1	1	1	10/18/00
X00388	XG.2000.1160-15	108-38-3/106-42	p/m Xylenes	ND	ug / L	1	2	1	10/18/00
X00388	XG.2000.1160-15	100-42-5	Styrene	ND	ug / L	1	1	1	10/18/00
X00388	XG.2000.1160-15	156-60-5	t-1,2 Dichloroethene	ND	ug / L	1	1	1	10/18/00
X00388	XG.2000.1160-15	10061-02-6	t-1,3 Dichloropropene	ND	ug / L	1	1	1	10/18[illegible]

Certificate of Analysis

t: **CH2MHILL**

Project: **0010161** **KAFB ST-106**

X00388	XG.2000.1160-15	127-18-4	Tetrachloroethene	ND	ug / L	1	1	1	10/18/00
X00388	XG.2000.1160-15	108-88-3	Toluene	ND	ug / L	1	1	1	10/18/00
X00388	XG.2000.1160-15	79-01-6	Trichloroethene	ND	ug / L	1	1	1	10/18/00
X00388	XG.2000.1160-15	75-69-4	Trichlorofluoromethane	ND	ug / L	1	5	1	10/18/00
X00388	XG.2000.1160-15	108-05-4	Vinyl acetate	ND	ug / L	1	5	1	10/18/00
X00388	XG.2000.1160-15	75-01-4	Vinyl chloride	ND	ug / L	1	5	1	10/18/00

**** Sample specific Detection Limit is determined by multiplying the sample Dilution Factor by the listed Reporting Detection Limit. ****

**** ND = Not detected: less than the sample specific Detection Limit. Results relate only to the items tested. ****

footnote [1] Sample had headspace at the time of analysis.

Quality Control Summary

Client: CH2MHILL

Project: 0010161 KAFB ST-106

Explanation of codes

D *Not applicable due to sample dilution*

L *Not applicable due to MDL proximity*

QC Type **LCS: Lab Control Spike** QC Matrix **SOLID**

QC Group	Run Sequence	CAS #	Analyte	Result	Units	Dilution Factor	Detection Limit	Code	Run Date
X00407-002		SW846 ME/8015A Diesel Range Organics by GC/FID							
X00407	XG.2000.1150-10		Diesel Range Organics	100	% Recovery	1	NA		10/17/00
X00408-002		SW846 5030A/8015A GRO by GC/FID							
X00408	XG.2000.1155-2		Gasoline Range Organics	95	% Recovery	1	NA		10/16/00
X00411-002		SW846 5030A/8021B Purgeable VOCs by GC/PID							
X00411	XG.2000.1164-9	71-43-2	Benzene	102	% Recovery	1	NA		10/18/00
X00411	XG.2000.1164-9	100-41-4	Ethylbenzene	105	% Recovery	1	NA		10/18/00
X00411	XG.2000.1164-9	95-47-6	o-Xylene	105	% Recovery	1	NA		10/18/00
X00411	XG.2000.1164-9	108-38-3/106-42	p/m-Xylenes	106	% Recovery	1	NA		10/18/00
X00411	XG.2000.1164-9	108-88-3	Toluene	102	% Recovery	1	NA		10/18/00

QC Type **LCSD: Lab Control Spike Duplicate Accuracy** QC Matrix **SOLID**

QC Group	Run Sequence	CAS #	Analyte	Result	Units	Dilution Factor	Detection Limit	Code	Run Date
X00407-003		SW846 ME/8015A Diesel Range Organics by GC/FID							
X00407	XG.2000.1150-11		Diesel Range Organics	103	% Recovery	1	NA		10/17/00
X00408-003		SW846 5030A/8015A GRO by GC/FID							
X00408	XG.2000.1155-3		Gasoline Range Organics	94	% Recovery	1	NA		10/16/00
X00411-003		SW846 5030A/8021B Purgeable VOCs by GC/PID							
X00411	XG.2000.1164-10	71-43-2	Benzene	100	% Recovery	1	NA		10/18/00
X00411	XG.2000.1164-10	100-41-4	Ethylbenzene	104	% Recovery	1	NA		10/18/00
X00411	XG.2000.1164-10	95-47-6	o-Xylene	104	% Recovery	1	NA		10/18/00
X00411	XG.2000.1164-10	108-38-3/106-42	p/m-Xylenes	104	% Recovery	1	NA		10/18/00
X00411	XG.2000.1164-10	108-88-3	Toluene	101	% Recovery	1	NA		10/18/00

QC Type **LCSD: Lab Control Spike Duplicate Precision** QC Matrix **SOLID**

QC Group	Run Sequence	CAS #	Analyte	Result	Units	Dilution Factor	Detection Limit	Code	Run Date
X00407-003		SW846 ME/8015A Diesel Range Organics by GC/FID							
X00407	XG.2000.1150-11		Diesel Range Organics	3	RPD	1	NA		10/17/00
X00408-003		SW846 5030A/8015A GRO by GC/FID							
X00408	XG.2000.1155-3		Gasoline Range Organics	< 1	RPD	1	NA		10/16/00
X00411-003		SW846 5030A/8021B Purgeable VOCs by GC/PID							
11	XG.2000.1164-10	71-43-2	Benzene	1	RPD	1	NA		10/18/00
,11	XG.2000.1164-10	100-41-4	Ethylbenzene	1	RPD	1	NA		10/18/00

Quality Control Summary

Client: CH2MHILL

Project: 0010161 KAFB ST-106

Explanation of codes

D *Not applicable due to sample dilut*

L *Not applicable due to MDL proxim*

X00411	XG.2000.1164-10	95-47-6	o-Xylene	< 1	RPD	1	NA	10/18/00
X00411	XG.2000.1164-10	108-38-3/106-42	p/m-Xylenes	1	RPD	1	NA	10/18/00
X00411	XG.2000.1164-10	108-88-3	Toluene	1	RPD	1	NA	10/18/00

QC Type **MB: Method Blank** QC Matrix **SOLID**

QC Group	Run Sequence	CAS #	Analyte	Result	Units	Dilution Factor	Detection Limit	Code	Run Date
X00407-001		**SW846 ME/8015A Diesel Range Organics by GC/FID**							
X00407	XG.2000.1150-9		Diesel Range Organics	ND	mg / Kg	1	25		10/16/00
X00407-014		**SW846 ME/8015A Diesel Range Organics by GC/FID**							
X00407	XG.2000.1150-26		Diesel Range Organics	ND	mg / Kg	1	25		10/17/00
X00408-001		**SW846 5030A/8015A GRO by GC/FID**							
X00408	XG.2000.1155-1		Gasoline Range Organics	ND	mg / Kg	1	0.25		10/16/00
X00408-026		**SW846 5030A/8015A GRO by GC/FID**							
X00408	XG.2000.1161-1		Gasoline Range Organics	ND	mg / Kg	1	0.25		10/18/00
X00411-001		**SW846 5030A/8021B Purgeable VOCs by GC/PID**							
X00411	XG.2000.1164-8	71-43-2	Benzene	ND	mg / Kg	1	0.005		10/18/00
X00411	XG.2000.1164-8	100-41-4	Ethylbenzene	ND	mg / Kg	1	0.005		10/18/00
X00411	XG.2000.1164-8	95-47-6	o-Xylene	ND	mg / Kg	1	0.005		10/18/
X00411	XG.2000.1164-8	108-38-3/106-42	p/m-Xylenes	ND	mg / Kg	1	0.01		10/18/00
X00411	XG.2000.1164-8	108-88-3	Toluene	ND	mg / Kg	1	0.005		10/18/00
X00411-004		**SW846 5030A/8021B Purgeable VOCs by GC/PID**							
X00411	XG.2000.1164-11	71-43-2	Benzene	ND	mg / Kg	1	0.005		10/19/00
X00411	XG.2000.1164-11	100-41-4	Ethylbenzene	ND	mg / Kg	1	0.005		10/19/00
X00411	XG.2000.1164-11	95-47-6	o-Xylene	ND	mg / Kg	1	0.005		10/19/00
X00411	XG.2000.1164-11	108-38-3/106-42	p/m-Xylenes	ND	mg / Kg	1	0.01		10/19/00
X00411	XG.2000.1164-11	108-88-3	Toluene	ND	mg / Kg	1	0.005		10/19/00
X00411-008		**SW846 5030A/8021B Purgeable VOCs by GC/PID**							
X00411	XG.2000.1177-1	108-38-3/106-42	p/m-Xylenes	ND	mg / Kg	1	0.01		10/23/00
X00411	XG.2000.1177-1	108-88-3	Toluene	ND	mg / Kg	1	0.005		10/23/00

QC Type **MS: Matrix Spike** QC Matrix **SOLID**

QC Group	Run Sequence	CAS #	Analyte	Result	Units	Dilution Factor	Detection Limit	Code	Run Date
X00407-005		**SW846 ME/8015A Diesel Range Organics by GC/FID**							
X00407	XG.2000.1150-13		Diesel Range Organics	110	% Recovery	1	NA		10/17/00
X00408-023		**SW846 5030A/8015A GRO by GC/FID**							
X00408	XG.2000.1155-15		Gasoline Range Organics	90	% Recovery	1	NA		10/17/00

Quality Control Summary

Client: CH2MHILL

Project: 0010161 KAFB ST-106

Explanation of codes

D Not applicable due to sample dilution

L Not applicable due to MDL proximity

X00411-006		SW846 5030A/8021B Purgeable VOCs by GC/PID							
X00411	XG.2000.1164-13	71-43-2	Benzene	103	% Recovery	1	NA		10/19/00
X00411	XG.2000.1164-13	100-41-4	Ethylbenzene	105	% Recovery	1	NA		10/19/00
X00411	XG.2000.1164-13	95-47-6	o-Xylene	104	% Recovery	1	NA		10/19/00
X00411	XG.2000.1164-13	108-38-3/106-42	p/m-Xylenes	105	% Recovery	1	NA		10/19/00
X00411	XG.2000.1164-13	108-88-3	Toluene	102	% Recovery	1	NA		10/19/00

QC Type **MSD: Matrix Spike Duplicate Accuracy** QC Matrix **SOLID**

QC Group	Run Sequence	CAS #	Analyte	Result	Units	Dilution Factor	Detection Limit	Code	Run Date
X00407-006		SW846 ME/8015A Diesel Range Organics by GC/FID							
X00407	XG.2000.1150-14		Diesel Range Organics	108	% Recovery	1	NA		10/17/00
X00408-024		SW846 5030A/8015A GRO by GC/FID							
X00408	XG.2000.1155-16		Gasoline Range Organics	108	% Recovery	1	NA		10/17/00
X00411-007		SW846 5030A/8021B Purgeable VOCs by GC/PID							
X00411	XG.2000.1164-14	71-43-2	Benzene	104	% Recovery	1	NA		10/19/00
X00411	XG.2000.1164-14	100-41-4	Ethylbenzene	108	% Recovery	1	NA		10/19/00
X00411	XG.2000.1164-14	95-47-6	o-Xylene	107	% Recovery	1	NA		10/19/00
X00411	XG.2000.1164-14	108-38-3/106-42	p/m-Xylenes	108	% Recovery	1	NA		10/19/00
X00411	XG.2000.1164-14	108-88-3	Toluene	104	% Recovery	1	NA		10/19/00

QC Type **MSD: Matrix Spike Duplicate Precision** QC Matrix **SOLID**

QC Group	Run Sequence	CAS #	Analyte	Result	Units	Dilution Factor	Detection Limit	Code	Run Date
X00407-006		SW846 ME/8015A Diesel Range Organics by GC/FID							
X00407	XG.2000.1150-14		Diesel Range Organics	2	RPD	1	NA		10/17/00
X00408-024		SW846 5030A/8015A GRO by GC/FID							
X00408	XG.2000.1155-16		Gasoline Range Organics	18	RPD	1	NA		10/17/00
X00411-007		SW846 5030A/8021B Purgeable VOCs by GC/PID							
X00411	XG.2000.1164-14	71-43-2	Benzene	2	RPD	1	NA		10/19/00
X00411	XG.2000.1164-14	100-41-4	Ethylbenzene	2	RPD	1	NA		10/19/00
X00411	XG.2000.1164-14	95-47-6	o-Xylene	3	RPD	1	NA		10/19/00
X00411	XG.2000.1164-14	108-38-3/106-42	p/m-Xylenes	3	RPD	1	NA		10/19/00
X00411	XG.2000.1164-14	108-88-3	Toluene	2	RPD	1	NA		10/19/00

Quality Control Summary

Client: CH2MHILL
Project: 0010161 KAFB ST-106

Explanation of codes

D *Not applicable due to sample diluti*
L *Not applicable due to MDL proxim*

QC Type **LCS: Lab Control Spike** QC Matrix **WATER**

QC Group	Run Sequence	CAS #	Analyte	Result	Units	Dilution Factor	Detection Limit	Code	Run Date
X00388-004		SW846 8260A Purgeable VOCs by GC/MS							
X00388	XG.2000.1100-4	75-34-3	1,1 Dichloroethene	110	% Recovery	1	NA		10/03/00
X00388	XG.2000.1100-4	106-46-7	1,4 Dichlorobenzene	100	% Recovery	1	NA		10/03/00
X00388	XG.2000.1100-4	71-43-2	Benzene	112	% Recovery	1	NA		10/03/00
X00388	XG.2000.1100-4	108-90-7	Chlorobenzene	109	% Recovery	1	NA		10/03/00
X00388	XG.2000.1100-4	108-88-3	Toluene	113	% Recovery	1	NA		10/03/00
X00388	XG.2000.1100-4	79-01-6	Trichloroethene	110	% Recovery	1	NA		10/03/00

QC Type **LCSD: Lab Control Spike Duplicate Accuracy** QC Matrix **WATER**

QC Group	Run Sequence	CAS #	Analyte	Result	Units	Dilution Factor	Detection Limit	Code	Run Date
X00388-005		SW846 8260A Purgeable VOCs by GC/MS							
X00388	XG.2000.1100-5	75-34-3	1,1 Dichloroethene	111	% Recovery	1	NA		10/03/00
X00388	XG.2000.1100-5	106-46-7	1,4 Dichlorobenzene	98	% Recovery	1	NA		10/03/00
X00388	XG.2000.1100-5	71-43-2	Benzene	111	% Recovery	1	NA		10/03/
X00388	XG.2000.1100-5	108-90-7	Chlorobenzene	109	% Recovery	1	NA		10/03/
X00388	XG.2000.1100-5	108-88-3	Toluene	112	% Recovery	1	NA		10/03/00
X00388	XG.2000.1100-5	79-01-6	Trichloroethene	110	% Recovery	1	NA		10/03/00

QC Type **LCSD: Lab Control Spike Duplicate Precision** QC Matrix **WATER**

QC Group	Run Sequence	CAS #	Analyte	Result	Units	Dilution Factor	Detection Limit	Code	Run Date
X00388-005		SW846 8260A Purgeable VOCs by GC/MS							
X00388	XG.2000.1100-5	75-34-3	1,1 Dichloroethene	2	RPD	1	NA		10/03/00
X00388	XG.2000.1100-5	106-46-7	1,4 Dichlorobenzene	2	RPD	1	NA		10/03/00
X00388	XG.2000.1100-5	71-43-2	Benzene	< 1	RPD	1	NA		10/03/00
X00388	XG.2000.1100-5	108-90-7	Chlorobenzene	< 1	RPD	1	NA		10/03/00
X00388	XG.2000.1100-5	108-88-3	Toluene	< 1	RPD	1	NA		10/03/00
X00388	XG.2000.1100-5	79-01-6	Trichloroethene	< 1	RPD	1	NA		10/03/00

QC Type **MB: Method Blank** QC Matrix **WATER**

QC Group	Run Sequence	CAS #	Analyte	Result	Units	Dilution Factor	Detection Limit	Code	Run Date
X00388-001		SW846 8260A Purgeable VOCs by GC/MS							
X00388	XG.2000.1100-1	75-34-3	1,1 Dichloroethane	ND	ug / L	1	1		10/03/00
X00388	XG.2000.1100-1	75-34-3	1,1 Dichloroethene	ND	ug / L	1	1		10/03/

Quality Control Summary

Explanation of codes

D *Not applicable due to sample dilution*
L *Not applicable due to MDL proximity*

Client: **CH2MHILL**
Project: **0010161 KAFB ST-106**

X00388	XG.2000.1100-1	71-55-6	1,1,1 Trichloroethane	ND	ug / L	1	1	10/03/00
X00388	XG.2000.1100-1	630-20-6	1,1,1,2 Tetrachloroethane	ND	ug / L	1	1	10/03/00
X00388	XG.2000.1100-1	79-00-5	1,1,2 Trichloroethane	ND	ug / L	1	1	10/03/00
X00388	XG.2000.1100-1	79-34-5	1,1,2,2 Tetrachloroethane	ND	ug / L	1	1	10/03/00
X00388	XG.2000.1100-1	106-93-4	1,2 Dibromoethane (EDB)	ND	ug / L	1	1	10/03/00
X00388	XG.2000.1100-1	95-50-1	1,2 Dichlorobenzene	ND	ug / L	1	1	10/03/00
X00388	XG.2000.1100-1	107-06-2	1,2 Dichloroethane	ND	ug / L	1	1	10/03/00
X00388	XG.2000.1100-1	78-87-5	1,2 Dichloropropane	ND	ug / L	1	1	10/03/00
X00388	XG.2000.1100-1	96-18-4	1,2,3 Trichloropropane	ND	ug / L	1	1	10/03/00
X00388	XG.2000.1100-1	95-63-6	1,2,4-Trimethylbenzene	ND	ug / L	1	1	10/03/00
X00388	XG.2000.1100-1	541-73-1	1,3 Dichlorobenzene	ND	ug / L	1	1	10/03/00
X00388	XG.2000.1100-1	108-67-8	1,3,5-Trimethylbenzene	ND	ug / L	1	1	10/03/00
X00388	XG.2000.1100-1	764-41-0	1,4 Dichloro-2-butene	ND	ug / L	1	10	10/03/00
X00388	XG.2000.1100-1	106-46-7	1,4 Dichlorobenzene	ND	ug / L	1	1	10/03/00
X00388	XG.2000.1100-1	78-93-3	2-Butanone (MEK)	ND	ug / L	1	5	10/03/00
X00388	XG.2000.1100-1	110-75-8	2-Chloroethylvinylether	ND	ug / L	1	5	10/03/00
X00388	XG.2000.1100-1	591-78-6	2-Hexanone (MBK)	ND	ug / L	1	5	10/03/00
X00388	XG.2000.1100-1	108-10-1	4-Methyl-2-pentanone (MIBK)	ND	ug / L	1	5	10/03/00
X00388	XG.2000.1100-1	67-64-1	Acetone	ND	ug / L	1	10	10/03/00
X00388	XG.2000.1100-1	107-02-8	Acrolein	ND	ug / L	1	20	10/03/00
X00388	XG.2000.1100-1	107-13-1	Acrylonitrile	ND	ug / L	1	20	10/03/00
X00388	XG.2000.1100-1	71-43-2	Benzene	ND	ug / L	1	1	10/03/00
X00388	XG.2000.1100-1	75-27-4	Bromodichloromethane	ND	ug / L	1	1	10/03/00
[illegible]8	XG.2000.1100-1	75-25-2	Bromoform	ND	ug / L	1	1	10/03/00
[illegible]8	XG.2000.1100-1	74-83-9	Bromomethane	ND	ug / L	1	5	10/03/00
X00388	XG.2000.1100-1	75-15-0	Carbon disulfide	ND	ug / L	1	5	10/03/00
X00388	XG.2000.1100-1	56-23-5	Carbon tetrachloride	ND	ug / L	1	1	10/03/00
X00388	XG.2000.1100-1	108-90-7	Chlorobenzene	ND	ug / L	1	1	10/03/00
X00388	XG.2000.1100-1	124-48-1	Chlorodibromomethane	ND	ug / L	1	1	10/03/00
X00388	XG.2000.1100-1	75-00-3	Chloroethane	ND	ug / L	1	5	10/03/00
X00388	XG.2000.1100-1	67-66-3	Chloroform	ND	ug / L	1	1	10/03/00
X00388	XG.2000.1100-1	74-87-3	Chloromethane	ND	ug / L	1	5	10/03/00
X00388	XG.2000.1100-1	156-59-2	cis-1,2 dichloroethene	ND	ug / L	1	1	10/03/00
X00388	XG.2000.1100-1	10061-01-5	cis-1,3 dichloropropene	ND	ug / L	1	1	10/03/00
X00388	XG.2000.1100-1	74-95-3	Dibromomethane	ND	ug / L	1	1	10/03/00
X00388	XG.2000.1100-1	97-63-2	Ethyl methacrylate	ND	ug / L	1	5	10/03/00
X00388	XG.2000.1100-1	100-41-4	Ethylbenzene	ND	ug / L	1	1	10/03/00
X00388	XG.2000.1100-1		Freon 113	ND	ug / L	1	5	10/03/00
X00388	XG.2000.1100-1	75-71-8	Freon 12	ND	ug / L	1	10	10/03/00
X00388	XG.2000.1100-1	74-88-4	Iodomethane	ND	ug / L	1	5	10/03/00
X00388	XG.2000.1100-1	1634-04-4	Methyl t-butyl ether (MTBE)	ND	ug / L	1	1	10/03/00
X00388	XG.2000.1100-1	75-09-2	Methylene chloride	ND	ug / L	1	10	10/03/00
X00388	XG.2000.1100-1	91-20-3	Naphthalene	ND	ug / L	1	5	10/03/00
X00388	XG.2000.1100-1	95-47-6	o-Xylene	ND	ug / L	1	1	10/03/00
X00388	XG.2000.1100-1	108-38-3/106-42	p/m Xylenes	ND	ug / L	1	2	10/03/00
X00388	XG.2000.1100-1	100-42-5	Styrene	ND	ug / L	1	1	10/03/00
X00388	XG.2000.1100-1	156-60-5	t-1,2 Dichloroethene	ND	ug / L	1	1	10/03/00
X00388	XG.2000.1100-1	10061-02-6	t-1,3 Dichloropropene	ND	ug / L	1	1	10/03/00
[illegible]88	XG.2000.1100-1	127-18-4	Tetrachloroethene	ND	ug / L	1	1	10/03/00
[illegible]8	XG.2000.1100-1	108-88-3	Toluene	ND	ug / L	1	1	10/03/00

Quality Control Summary

Client: CH2MHILL

Project: 0010161 KAFB ST-106

Explanation of codes

D Not applicable due to sample dilu

L Not applicable due to MDL proxim

X00388	XG.2000.1100-1	79-01-6	Trichloroethene	ND	ug / L	1	1	10/03/00
X00388	XG.2000.1100-1	75-69-4	Trichlorofluoromethane	ND	ug / L	1	5	10/03/00
X00388	XG.2000.1100-1	108-05-4	Vinyl acetate	ND	ug / L	1	5	10/03/00
X00388	XG.2000.1100-1	75-01-4	Vinyl chloride	ND	ug / L	1	5	10/03/00
X00388-006		**SW846 8260A Purgeable VOCs by GC/MS**						
X00388	XG.2000.1100-6	75-34-3	1,1 Dichloroethane	ND	ug / L	1	1	10/04/00
X00388	XG.2000.1100-6	75-34-3	1,1 Dichloroethene	ND	ug / L	1	1	10/04/00
X00388	XG.2000.1100-6	71-55-6	1,1,1 Trichloroethane	ND	ug / L	1	1	10/04/00
X00388	XG.2000.1100-6	630-20-6	1,1,1,2 Tetrachloroethane	ND	ug / L	1	1	10/04/00
X00388	XG.2000.1100-6	79-00-5	1,1,2 Trichloroethane	ND	ug / L	1	1	10/04/00
X00388	XG.2000.1100-6	79-34-5	1,1,2,2 Tetrachloroethane	ND	ug / L	1	1	10/04/00
X00388	XG.2000.1100-6	106-93-4	1,2 Dibromoethane (EDB)	ND	ug / L	1	1	10/04/00
X00388	XG.2000.1100-6	95-50-1	1,2 Dichlorobenzene	ND	ug / L	1	1	10/04/00
X00388	XG.2000.1100-6	107-06-2	1,2 Dichloroethane	ND	ug / L	1	1	10/04/00
X00388	XG.2000.1100-6	78-87-5	1,2 Dichloropropane	ND	ug / L	1	1	10/04/00
X00388	XG.2000.1100-6	96-18-4	1,2,3 Trichloropropane	ND	ug / L	1	1	10/04/00
X00388	XG.2000.1100-6	95-63-6	1,2,4-Trimethylbenzene	ND	ug / L	1	1	10/04/00
X00388	XG.2000.1100-6	541-73-1	1,3 Dichlorobenzene	ND	ug / L	1	1	10/04/00
X00388	XG.2000.1100-6	108-67-8	1,3,5-Trimethylbenzene	ND	ug / L	1	1	10/04/00
X00388	XG.2000.1100-6	764-41-0	1,4 Dichloro-2-butene	ND	ug / L	1	10	10/04/00
X00388	XG.2000.1100-6	106-46-7	1,4 Dichlorobenzene	ND	ug / L	1	1	10/04/00
X00388	XG.2000.1100-6	78-93-3	2-Butanone (MEK)	ND	ug / L	1	5	10/04/00
X00388	XG.2000.1100-6	110-75-8	2-Chloroethylvinylether	ND	ug / L	1	5	10/04/00
X00388	XG.2000.1100-6	591-78-6	2-Hexanone (MBK)	ND	ug / L	1	5	10/0
X00388	XG.2000.1100-6	108-10-1	4-Methyl-2-pentanone (MIBK)	ND	ug / L	1	5	10/04/00
X00388	XG.2000.1100-6	67-64-1	Acetone	ND	ug / L	1	10	10/04/00
X00388	XG.2000.1100-6	107-02-8	Acrolein	ND	ug / L	1	20	10/04/00
X00388	XG.2000.1100-6	107-13-1	Acrylonitrile	ND	ug / L	1	20	10/04/00
X00388	XG.2000.1100-6	71-43-2	Benzene	ND	ug / L	1	1	10/04/00
X00388	XG.2000.1100-6	75-27-4	Bromodichloromethane	ND	ug / L	1	1	10/04/00
X00388	XG.2000.1100-6	75-25-2	Bromoform	ND	ug / L	1	1	10/04/00
X00388	XG.2000.1100-6	74-83-9	Bromomethane	ND	ug / L	1	5	10/04/00
X00388	XG.2000.1100-6	75-15-0	Carbon disulfide	ND	ug / L	1	5	10/04/00
X00388	XG.2000.1100-6	56-23-5	Carbon tetrachloride	ND	ug / L	1	1	10/04/00
X00388	XG.2000.1100-6	108-90-7	Chlorobenzene	ND	ug / L	1	1	10/04/00
X00388	XG.2000.1100-6	124-48-1	Chlorodibromomethane	ND	ug / L	1	1	10/04/00
X00388	XG.2000.1100-6	75-00-3	Chloroethane	ND	ug / L	1	5	10/04/00
X00388	XG.2000.1100-6	67-66-3	Chloroform	ND	ug / L	1	1	10/04/00
X00388	XG.2000.1100-6	74-87-3	Chloromethane	ND	ug / L	1	5	10/04/00
X00388	XG.2000.1100-6	156-59-2	cis-1,2 dichloroethene	ND	ug / L	1	1	10/04/00
X00388	XG.2000.1100-6	10061-01-5	cis-1,3 dichloropropene	ND	ug / L	1	1	10/04/00
X00388	XG.2000.1100-6	74-95-3	Dibromomethane	ND	ug / L	1	1	10/04/00
X00388	XG.2000.1100-6	97-63-2	Ethyl methacrylate	ND	ug / L	1	5	10/04/00
X00388	XG.2000.1100-6	100-41-4	Ethylbenzene	ND	ug / L	1	1	10/04/00
X00388	XG.2000.1100-6		Freon 113	ND	ug / L	1	5	10/04/00
X00388	XG.2000.1100-6	75-71-8	Freon 12	ND	ug / L	1	10	10/04/00
X00388	XG.2000.1100-6	74-88-4	Iodomethane	ND	ug / L	1	5	10/04/00
X00388	XG.2000.1100-6	1634-04-4	Methyl t-butyl ether (MTBE)	ND	ug / L	1	1	10/04/00
X00388	XG.2000.1100-6	75-09-2	Methylene chloride	ND	ug / L	1	10	10/04/00
X00388	XG.2000.1100-6	91-20-3	Naphthalene	ND	ug / L	1	5	10/0

Quality Control Summary

Client: **CH2MHILL**

ct: **0010161** **KAFB ST-106**

Explanation of codes

D *Not applicable due to sample dilution*

L *Not applicable due to MDL proximity*

X00388	XG.2000.1100-6	95-47-6	o-Xylene	ND	ug / L	1	1	10/04/00
X00388	XG.2000.1100-6	108-38-3/106-42	p/m Xylenes	ND	ug / L	1	2	10/04/00
X00388	XG.2000.1100-6	100-42-5	Styrene	ND	ug / L	1	1	10/04/00
X00388	XG.2000.1100-6	156-60-5	t-1,2 Dichloroethene	ND	ug / L	1	1	10/04/00
X00388	XG.2000.1100-6	10061-02-6	t-1,3 Dichloropropene	ND	ug / L	1	1	10/04/00
X00388	XG.2000.1100-6	127-18-4	Tetrachloroethene	ND	ug / L	1	1	10/04/00
X00388	XG.2000.1100-6	108-88-3	Toluene	ND	ug / L	1	1	10/04/00
X00388	XG.2000.1100-6	79-01-6	Trichloroethene	ND	ug / L	1	1	10/04/00
X00388	XG.2000.1100-6	75-69-4	Trichlorofluoromethane	ND	ug / L	1	5	10/04/00
X00388	XG.2000.1100-6	108-05-4	Vinyl acetate	ND	ug / L	1	5	10/04/00
X00388	XG.2000.1100-6	75-01-4	Vinyl chloride	ND	ug / L	1	5	10/04/00

X00388-013 **SW846 8260A Purgeable VOCs by GC/MS**

X00388	XG.2000.1160-1	75-34-3	1,1 Dichloroethane	ND	ug / L	1	1	10/11/00
X00388	XG.2000.1160-1	75-34-3	1,1 Dichloroethene	ND	ug / L	1	1	10/11/00
X00388	XG.2000.1160-1	71-55-6	1,1,1 Trichloroethane	ND	ug / L	1	1	10/11/00
X00388	XG.2000.1160-1	630-20-6	1,1,1,2 Tetrachloroethane	ND	ug / L	1	1	10/11/00
X00388	XG.2000.1160-1	79-00-5	1,1,2 Trichloroethane	ND	ug / L	1	1	10/11/00
X00388	XG.2000.1160-1	79-34-5	1,1,2,2 Tetrachloroethane	ND	ug / L	1	1	10/11/00
X00388	XG.2000.1160-1	106-93-4	1,2 Dibromoethane (EDB)	ND	ug / L	1	1	10/11/00
X00388	XG.2000.1160-1	95-50-1	1,2 Dichlorobenzene	ND	ug / L	1	1	10/11/00
X00388	XG.2000.1160-1	107-06-2	1,2 Dichloroethane	ND	ug / L	1	1	10/11/00
X00388	XG.2000.1160-1	78-87-5	1,2 Dichloropropane	ND	ug / L	1	1	10/11/00
X00388	XG.2000.1160-1	96-18-4	1,2,3 Trichloropropane	ND	ug / L	1	1	10/11/00
X00388	XG.2000.1160-1	95-63-6	1,2,4-Trimethylbenzene	ND	ug / L	1	1	10/11/00
X00388	XG.2000.1160-1	541-73-1	1,3 Dichlorobenzene	ND	ug / L	1	1	10/11/00
X00388	XG.2000.1160-1	108-67-8	1,3,5-Trimethylbenzene	ND	ug / L	1	1	10/11/00
X00388	XG.2000.1160-1	764-41-0	1,4 Dichloro-2-butene	ND	ug / L	1	10	10/11/00
X00388	XG.2000.1160-1	106-46-7	1,4 Dichlorobenzene	ND	ug / L	1	1	10/11/00
X00388	XG.2000.1160-1	78-93-3	2-Butanone (MEK)	ND	ug / L	1	5	10/11/00
X00388	XG.2000.1160-1	110-75-8	2-Chloroethylvinylether	ND	ug / L	1	5	10/11/00
X00388	XG.2000.1160-1	591-78-6	2-Hexanone (MBK)	ND	ug / L	1	5	10/11/00
X00388	XG.2000.1160-1	108-10-1	4-Methyl-2-pentanone (MIBK)	ND	ug / L	1	5	10/11/00
X00388	XG.2000.1160-1	67-64-1	Acetone	ND	ug / L	1	10	10/11/00
X00388	XG.2000.1160-1	107-02-8	Acrolein	ND	ug / L	1	20	10/11/00
X00388	XG.2000.1160-1	107-13-1	Acrylonitrile	ND	ug / L	1	20	10/11/00
X00388	XG.2000.1160-1	71-43-2	Benzene	ND	ug / L	1	1	10/11/00
X00388	XG.2000.1160-1	75-27-4	Bromodichloromethane	ND	ug / L	1	1	10/11/00
X00388	XG.2000.1160-1	75-25-2	Bromoform	ND	ug / L	1	1	10/11/00
X00388	XG.2000.1160-1	74-83-9	Bromomethane	ND	ug / L	1	5	10/11/00
X00388	XG.2000.1160-1	75-15-0	Carbon disulfide	ND	ug / L	1	5	10/11/00
X00388	XG.2000.1160-1	56-23-5	Carbon tetrachloride	ND	ug / L	1	1	10/11/00
X00388	XG.2000.1160-1	108-90-7	Chlorobenzene	ND	ug / L	1	1	10/11/00
X00388	XG.2000.1160-1	124-48-1	Chlorodibromomethane	ND	ug / L	1	1	10/11/00
X00388	XG.2000.1160-1	75-00-3	Chloroethane	ND	ug / L	1	5	10/11/00
X00388	XG.2000.1160-1	67-66-3	Chloroform	ND	ug / L	1	1	10/11/00
X00388	XG.2000.1160-1	74-87-3	Chloromethane	ND	ug / L	1	5	10/11/00
X00388	XG.2000.1160-1	156-59-2	cis-1,2 dichloroethene	ND	ug / L	1	1	10/11/00
X00388	XG.2000.1160-1	10061-01-5	cis-1,3 dichloropropene	ND	ug / L	1	1	10/11/00
X00388	XG.2000.1160-1	74-95-3	Dibromomethane	ND	ug / L	1	1	10/11/00

Quality Control Summary

Client: **CH2MHILL**

Project: **0010161** **KAFB ST-106**

Explanation of codes

D *Not applicable due to sample dilu*

L *Not applicable due to MDL proxim*

X00388	XG.2000.1160-1	97-63-2	Ethyl methacrylate	ND	ug / L	1	5	10/11/00
X00388	XG.2000.1160-1	100-41-4	Ethylbenzene	ND	ug / L	1	1	10/11/00
X00388	XG.2000.1160-1		Freon 113	ND	ug / L	1	5	10/11/00
X00388	XG.2000.1160-1	75-71-8	Freon 12	ND	ug / L	1	10	10/11/00
X00388	XG.2000.1160-1	74-88-4	Iodomethane	ND	ug / L	1	5	10/11/00
X00388	XG.2000.1160-1	1634-04-4	Methyl t-butyl ether (MTBE)	ND	ug / L	1	1	10/11/00
X00388	XG.2000.1160-1	75-09-2	Methylene chloride	ND	ug / L	1	10	10/11/00
X00388	XG.2000.1160-1	91-20-3	Naphthalene	ND	ug / L	1	5	10/11/00
X00388	XG.2000.1160-1	95-47-6	o-Xylene	ND	ug / L	1	1	10/11/00
X00388	XG.2000.1160-1	108-38-3/106-42	p/m Xylenes	ND	ug / L	1	2	10/11/00
X00388	XG.2000.1160-1	100-42-5	Styrene	ND	ug / L	1	1	10/11/00
X00388	XG.2000.1160-1	156-60-5	t-1,2 Dichloroethene	ND	ug / L	1	1	10/11/00
X00388	XG.2000.1160-1	10061-02-6	t-1,3 Dichloropropene	ND	ug / L	1	1	10/11/00
X00388	XG.2000.1160-1	127-18-4	Tetrachloroethene	ND	ug / L	1	1	10/11/00
X00388	XG.2000.1160-1	108-88-3	Toluene	ND	ug / L	1	1	10/11/00
X00388	XG.2000.1160-1	79-01-6	Trichloroethene	ND	ug / L	1	1	10/11/00
X00388	XG.2000.1160-1	75-69-4	Trichlorofluoromethane	ND	ug / L	1	5	10/11/00
X00388	XG.2000.1160-1	108-05-4	Vinyl acetate	ND	ug / L	1	5	10/11/00
X00388	XG.2000.1160-1	75-01-4	Vinyl chloride	ND	ug / L	1	5	10/11/00
X00388-016		**SW846 8260A Purgeable VOCs by GC/MS**						
X00388	XG.2000.1160-3	75-34-3	1,1 Dichloroethane	ND	ug / L	1	1	10/12/00
X00388	XG.2000.1160-3	75-34-3	1,1 Dichloroethene	ND	ug / L	1	1	10/12/00
X00388	XG.2000.1160-3	71-55-6	1,1,1 Trichloroethane	ND	ug / L	1	1	10/1
X00388	XG.2000.1160-3	630-20-6	1,1,1,2 Tetrachloroethane	ND	ug / L	1	1	10/12
X00388	XG.2000.1160-3	79-00-5	1,1,2 Trichloroethane	ND	ug / L	1	1	10/12/00
X00388	XG.2000.1160-3	79-34-5	1,1,2,2 Tetrachloroethane	ND	ug / L	1	1	10/12/00
X00388	XG.2000.1160-3	106-93-4	1,2 Dibromoethane (EDB)	ND	ug / L	1	1	10/12/00
X00388	XG.2000.1160-3	95-50-1	1,2 Dichlorobenzene	ND	ug / L	1	1	10/12/00
X00388	XG.2000.1160-3	107-06-2	1,2 Dichloroethane	ND	ug / L	1	1	10/12/00
X00388	XG.2000.1160-3	78-87-5	1,2 Dichloropropane	ND	ug / L	1	1	10/12/00
X00388	XG.2000.1160-3	96-18-4	1,2,3 Trichloropropane	ND	ug / L	1	1	10/12/00
X00388	XG.2000.1160-3	95-63-6	1,2,4-Trimethylbenzene	ND	ug / L	1	1	10/12/00
X00388	XG.2000.1160-3	541-73-1	1,3 Dichlorobenzene	ND	ug / L	1	1	10/12/00
X00388	XG.2000.1160-3	108-67-8	1,3,5-Trimethylbenzene	ND	ug / L	1	1	10/12/00
X00388	XG.2000.1160-3	764-41-0	1,4 Dichloro-2-butene	ND	ug / L	1	10	10/12/00
X00388	XG.2000.1160-3	106-46-7	1,4 Dichlorobenzene	ND	ug / L	1	1	10/12/00
X00388	XG.2000.1160-3	78-93-3	2-Butanone (MEK)	ND	ug / L	1	5	10/12/00
X00388	XG.2000.1160-3	110-75-8	2-Chloroethylvinylether	ND	ug / L	1	5	10/12/00
X00388	XG.2000.1160-3	591-78-6	2-Hexanone (MBK)	ND	ug / L	1	5	10/12/00
X00388	XG.2000.1160-3	108-10-1	4-Methyl-2-pentanone (MIBK)	ND	ug / L	1	5	10/12/00
X00388	XG.2000.1160-3	67-64-1	Acetone	ND	ug / L	1	10	10/12/00
X00388	XG.2000.1160-3	107-02-8	Acrolein	ND	ug / L	1	20	10/12/00
X00388	XG.2000.1160-3	107-13-1	Acrylonitrile	ND	ug / L	1	20	10/12/00
X00388	XG.2000.1160-3	71-43-2	Benzene	ND	ug / L	1	1	10/12/00
X00388	XG.2000.1160-3	75-27-4	Bromodichloromethane	ND	ug / L	1	1	10/12/00
X00388	XG.2000.1160-3	75-25-2	Bromoform	ND	ug / L	1	1	10/12/00
X00388	XG.2000.1160-3	74-83-9	Bromomethane	ND	ug / L	1	5	10/12/00
X00388	XG.2000.1160-3	75-15-0	Carbon disulfide	ND	ug / L	1	5	10/12/00
X00388	XG.2000.1160-3	56-23-5	Carbon tetrachloride	ND	ug / L	1	1	10/1

Quality Control Summary

Client: CH2MHILL

Project: 0010161 KAFB ST-106

Explanation of codes

D Not applicable due to sample dilution

L Not applicable due to MDL proximity

X00388	XG.2000.1160-3	108-90-7	Chlorobenzene	ND	ug / L	1	1	10/12/00
X00388	XG.2000.1160-3	124-48-1	Chlorodibromomethane	ND	ug / L	1	1	10/12/00
X00388	XG.2000.1160-3	75-00-3	Chloroethane	ND	ug / L	1	5	10/12/00
X00388	XG.2000.1160-3	67-66-3	Chloroform	ND	ug / L	1	1	10/12/00
X00388	XG.2000.1160-3	74-87-3	Chloromethane	ND	ug / L	1	5	10/12/00
X00388	XG.2000.1160-3	156-59-2	cis-1,2 dichloroethene	ND	ug / L	1	1	10/12/00
X00388	XG.2000.1160-3	10061-01-5	cis-1,3 dichloropropene	ND	ug / L	1	1	10/12/00
X00388	XG.2000.1160-3	74-95-3	Dibromomethane	ND	ug / L	1	1	10/12/00
X00388	XG.2000.1160-3	97-63-2	Ethyl methacrylate	ND	ug / L	1	5	10/12/00
X00388	XG.2000.1160-3	100-41-4	Ethylbenzene	ND	ug / L	1	1	10/12/00
X00388	XG.2000.1160-3		Freon 113	ND	ug / L	1	5	10/12/00
X00388	XG.2000.1160-3	75-71-8	Freon 12	ND	ug / L	1	10	10/12/00
X00388	XG.2000.1160-3	74-88-4	Iodomethane	ND	ug / L	1	5	10/12/00
X00388	XG.2000.1160-3	1634-04-4	Methyl t-butyl ether (MTBE)	ND	ug / L	1	1	10/12/00
X00388	XG.2000.1160-3	75-09-2	Methylene chloride	ND	ug / L	1	10	10/12/00
X00388	XG.2000.1160-3	91-20-3	Naphthalene	ND	ug / L	1	5	10/12/00
X00388	XG.2000.1160-3	95-47-6	o-Xylene	ND	ug / L	1	1	10/12/00
X00388	XG.2000.1160-3	108-38-3/106-42	p/m Xylenes	ND	ug / L	1	2	10/12/00
X00388	XG.2000.1160-3	100-42-5	Styrene	ND	ug / L	1	1	10/12/00
X00388	XG.2000.1160-3	156-60-5	t-1,2 Dichloroethene	ND	ug / L	1	1	10/12/00
X00388	XG.2000.1160-3	10061-02-6	t-1,3 Dichloropropene	ND	ug / L	1	1	10/12/00
X00388	XG.2000.1160-3	127-18-4	Tetrachloroethene	ND	ug / L	1	1	10/12/00
X00388	XG.2000.1160-3	108-88-3	Toluene	ND	ug / L	1	1	10/12/00
[illegible]3	XG.2000.1160-3	79-01-6	Trichloroethene	ND	ug / L	1	1	10/12/00
X00388	XG.2000.1160-3	75-69-4	Trichlorofluoromethane	ND	ug / L	1	5	10/12/00
X00388	XG.2000.1160-3	108-05-4	Vinyl acetate	ND	ug / L	1	5	10/12/00
X00388	XG.2000.1160-3	75-01-4	Vinyl chloride	ND	ug / L	1	5	10/12/00
X00388-030		**SW846 8260A Purgeable VOCs by GC/MS**						
X00388	XG.2000.1160-13	75-34-3	1,1 Dichloroethane	ND	ug / L	1	1	10/13/00
X00388	XG.2000.1160-13	75-34-3	1,1 Dichloroethene	ND	ug / L	1	1	10/13/00
X00388	XG.2000.1160-13	71-55-6	1,1,1 Trichloroethane	ND	ug / L	1	1	10/13/00
X00388	XG.2000.1160-13	630-20-6	1,1,1,2 Tetrachloroethane	ND	ug / L	1	1	10/13/00
X00388	XG.2000.1160-13	79-00-5	1,1,2 Trichloroethane	ND	ug / L	1	1	10/13/00
X00388	XG.2000.1160-13	79-34-5	1,1,2,2 Tetrachloroethane	ND	ug / L	1	1	10/13/00
X00388	XG.2000.1160-13	106-93-4	1,2 Dibromoethane (EDB)	ND	ug / L	1	1	10/13/00
X00388	XG.2000.1160-13	95-50-1	1,2 Dichlorobenzene	ND	ug / L	1	1	10/13/00
X00388	XG.2000.1160-13	107-06-2	1,2 Dichloroethane	ND	ug / L	1	1	10/13/00
X00388	XG.2000.1160-13	78-87-5	1,2 Dichloropropane	ND	ug / L	1	1	10/13/00
X00388	XG.2000.1160-13	96-18-4	1,2,3 Trichloropropane	ND	ug / L	1	1	10/13/00
X00388	XG.2000.1160-13	95-63-6	1,2,4-Trimethylbenzene	ND	ug / L	1	1	10/13/00
X00388	XG.2000.1160-13	541-73-1	1,3 Dichlorobenzene	ND	ug / L	1	1	10/13/00
X00388	XG.2000.1160-13	108-67-8	1,3,5-Trimethylbenzene	ND	ug / L	1	1	10/13/00
X00388	XG.2000.1160-13	764-41-0	1,4 Dichloro-2-butene	ND	ug / L	1	10	10/13/00
X00388	XG.2000.1160-13	106-46-7	1,4 Dichlorobenzene	ND	ug / L	1	1	10/13/00
X00388	XG.2000.1160-13	78-93-3	2-Butanone (MEK)	ND	ug / L	1	5	10/13/00
X00388	XG.2000.1160-13	110-75-8	2-Chloroethylvinylether	ND	ug / L	1	5	10/13/00
X00388	XG.2000.1160-13	591-78-6	2-Hexanone (MBK)	ND	ug / L	1	5	10/13/00
X00388	XG.2000.1160-13	108-10-1	4-Methyl-2-pentanone (MIBK)	ND	ug / L	1	5	10/13/00
[illegible]8	XG.2000.1160-13	67-64-1	Acetone	ND	ug / L	1	10	10/13/00

Quality Control Summary

Client: CH2MHILL

Project: 0010161 KAFB ST-106

Explanation of codes

D Not applicable due to sample dilut

L Not applicable due to MDL proxim

X00388	XG.2000.1160-13	107-02-8	Acrolein	ND	ug / L	1	20	10/13/0
X00388	XG.2000.1160-13	107-13-1	Acrylonitrile	ND	ug / L	1	20	10/13/0
X00388	XG.2000.1160-13	71-43-2	Benzene	ND	ug / L	1	1	10/13/0
X00388	XG.2000.1160-13	75-27-4	Bromodichloromethane	ND	ug / L	1	1	10/13/0
X00388	XG.2000.1160-13	75-25-2	Bromoform	ND	ug / L	1	1	10/13/0
X00388	XG.2000.1160-13	74-83-9	Bromomethane	ND	ug / L	1	5	10/13/0
X00388	XG.2000.1160-13	75-15-0	Carbon disulfide	ND	ug / L	1	5	10/13/0
X00388	XG.2000.1160-13	56-23-5	Carbon tetrachloride	ND	ug / L	1	1	10/13/0
X00388	XG.2000.1160-13	108-90-7	Chlorobenzene	ND	ug / L	1	1	10/13/0
X00388	XG.2000.1160-13	124-48-1	Chlorodibromomethane	ND	ug / L	1	1	10/13/0
X00388	XG.2000.1160-13	75-00-3	Chloroethane	ND	ug / L	1	5	10/13/0
X00388	XG.2000.1160-13	67-66-3	Chloroform	ND	ug / L	1	1	10/13/0
X00388	XG.2000.1160-13	74-87-3	Chloromethane	ND	ug / L	1	5	10/13/0
X00388	XG.2000.1160-13	156-59-2	cis-1,2 dichloroethene	ND	ug / L	1	1	10/13/0
X00388	XG.2000.1160-13	10061-01-5	cis-1,3 dichloropropene	ND	ug / L	1	1	10/13/0
X00388	XG.2000.1160-13	74-95-3	Dibromomethane	ND	ug / L	1	1	10/13/0
X00388	XG.2000.1160-13	97-63-2	Ethyl methacrylate	ND	ug / L	1	5	10/13/0
X00388	XG.2000.1160-13	100-41-4	Ethylbenzene	ND	ug / L	1	1	10/13/0
X00388	XG.2000.1160-13		Freon 113	ND	ug / L	1	5	10/13/0
X00388	XG.2000.1160-13	75-71-8	Freon 12	ND	ug / L	1	10	10/13/0
X00388	XG.2000.1160-13	74-88-4	Iodomethane	ND	ug / L	1	5	10/13/0
X00388	XG.2000.1160-13	1634-04-4	Methyl t-butyl ether (MTBE)	ND	ug / L	1	1	10/13/0
X00388	XG.2000.1160-13	75-09-2	Methylene chloride	ND	ug / L	1	10	10/13/0
X00388	XG.2000.1160-13	91-20-3	Naphthalene	ND	ug / L	1	5	10/13
X00388	XG.2000.1160-13	95-47-6	o-Xylene	ND	ug / L	1	1	10/13
X00388	XG.2000.1160-13	108-38-3/106-42	p/m Xylenes	ND	ug / L	1	2	10/13/0
X00388	XG.2000.1160-13	100-42-5	Styrene	ND	ug / L	1	1	10/13/0
X00388	XG.2000.1160-13	156-60-5	t-1,2 Dichloroethene	ND	ug / L	1	1	10/13/0
X00388	XG.2000.1160-13	10061-02-6	t-1,3 Dichloropropene	ND	ug / L	1	1	10/13/0
X00388	XG.2000.1160-13	127-18-4	Tetrachloroethene	ND	ug / L	1	1	10/13/0
X00388	XG.2000.1160-13	108-88-3	Toluene	ND	ug / L	1	1	10/13/0
X00388	XG.2000.1160-13	79-01-6	Trichloroethene	ND	ug / L	1	1	10/13/0
X00388	XG.2000.1160-13	75-69-4	Trichlorofluoromethane	ND	ug / L	1	5	10/13/0
X00388	XG.2000.1160-13	108-05-4	Vinyl acetate	ND	ug / L	1	5	10/13/0
X00388	XG.2000.1160-13	75-01-4	Vinyl chloride	ND	ug / L	1	5	10/13/0
X00388-033		**SW846 8260A Purgeable VOCs by GC/MS**						
X00388	XG.2000.1160-14	75-34-3	1,1 Dichloroethane	ND	ug / L	1	1	10/18/0
X00388	XG.2000.1160-14	75-34-3	1,1 Dichloroethene	ND	ug / L	1	1	10/18/0
X00388	XG.2000.1160-14	71-55-6	1,1,1 Trichloroethane	ND	ug / L	1	1	10/18/0
X00388	XG.2000.1160-14	630-20-6	1,1,1,2 Tetrachloroethane	ND	ug / L	1	1	10/18/0
X00388	XG.2000.1160-14	79-00-5	1,1,2 Trichloroethane	ND	ug / L	1	1	10/18/0
X00388	XG.2000.1160-14	79-34-5	1,1,2,2 Tetrachloroethane	ND	ug / L	1	1	10/18/0
X00388	XG.2000.1160-14	106-93-4	1,2 Dibromoethane (EDB)	ND	ug / L	1	1	10/18/0
X00388	XG.2000.1160-14	95-50-1	1,2 Dichlorobenzene	ND	ug / L	1	1	10/18/0
X00388	XG.2000.1160-14	107-06-2	1,2 Dichloroethane	ND	ug / L	1	1	10/18/0
X00388	XG.2000.1160-14	78-87-5	1,2 Dichloropropane	ND	ug / L	1	1	10/18/0
X00388	XG.2000.1160-14	96-18-4	1,2,3 Trichloropropane	ND	ug / L	1	1	10/18/0
X00388	XG.2000.1160-14	95-63-6	1,2,4-Trimethylbenzene	ND	ug / L	1	1	10/18/0
X00388	XG.2000.1160-14	541-73-1	1,3 Dichlorobenzene	ND	ug / L	1	1	10/18

Quality Control Summary

Explanation of codes

D *Not applicable due to sample dilution*
L *Not applicable due to MDL proximity*

Client: **CH2MHILL**
Project: **0010161 KAFB ST-106**

X00388	XG.2000.1160-14	108-67-8	1,3,5-Trimethylbenzene	ND	ug / L	1	1	10/18/00
X00388	XG.2000.1160-14	764-41-0	1,4 Dichloro-2-butene	ND	ug / L	1	10	10/18/00
X00388	XG.2000.1160-14	106-46-7	1,4 Dichlorobenzene	ND	ug / L	1	1	10/18/00
X00388	XG.2000.1160-14	78-93-3	2-Butanone (MEK)	ND	ug / L	1	5	10/18/00
X00388	XG.2000.1160-14	110-75-8	2-Chloroethylvinylether	ND	ug / L	1	5	10/18/00
X00388	XG.2000.1160-14	591-78-6	2-Hexanone (MBK)	ND	ug / L	1	5	10/18/00
X00388	XG.2000.1160-14	108-10-1	4-Methyl-2-pentanone (MIBK)	ND	ug / L	1	5	10/18/00
X00388	XG.2000.1160-14	67-64-1	Acetone	ND	ug / L	1	10	10/18/00
X00388	XG.2000.1160-14	107-02-8	Acrolein	ND	ug / L	1	20	10/18/00
X00388	XG.2000.1160-14	107-13-1	Acrylonitrile	ND	ug / L	1	20	10/18/00
X00388	XG.2000.1160-14	71-43-2	Benzene	ND	ug / L	1	1	10/18/00
X00388	XG.2000.1160-14	75-27-4	Bromodichloromethane	ND	ug / L	1	1	10/18/00
X00388	XG.2000.1160-14	75-25-2	Bromoform	ND	ug / L	1	1	10/18/00
X00388	XG.2000.1160-14	74-83-9	Bromomethane	ND	ug / L	1	5	10/18/00
X00388	XG.2000.1160-14	75-15-0	Carbon disulfide	ND	ug / L	1	5	10/18/00
X00388	XG.2000.1160-14	56-23-5	Carbon tetrachloride	ND	ug / L	1	1	10/18/00
X00388	XG.2000.1160-14	108-90-7	Chlorobenzene	ND	ug / L	1	1	10/18/00
X00388	XG.2000.1160-14	124-48-1	Chlorodibromomethane	ND	ug / L	1	1	10/18/00
X00388	XG.2000.1160-14	75-00-3	Chloroethane	ND	ug / L	1	5	10/18/00
X00388	XG.2000.1160-14	67-66-3	Chloroform	ND	ug / L	1	1	10/18/00
X00388	XG.2000.1160-14	74-87-3	Chloromethane	ND	ug / L	1	5	10/18/00
X00388	XG.2000.1160-14	156-59-2	cis-1,2 dichloroethene	ND	ug / L	1	1	10/18/00
X00388	XG.2000.1160-14	10061-01-5	cis-1,3 dichloropropene	ND	ug / L	1	1	10/18/00
X00388	XG.2000.1160-14	74-95-3	Dibromomethane	ND	ug / L	1	1	10/18/00
X00388	XG.2000.1160-14	97-63-2	Ethyl methacrylate	ND	ug / L	1	5	10/18/00
X00388	XG.2000.1160-14	100-41-4	Ethylbenzene	ND	ug / L	1	1	10/18/00
X00388	XG.2000.1160-14		Freon 113	ND	ug / L	1	5	10/18/00
X00388	XG.2000.1160-14	75-71-8	Freon 12	ND	ug / L	1	10	10/18/00
X00388	XG.2000.1160-14	74-88-4	Iodomethane	ND	ug / L	1	5	10/18/00
X00388	XG.2000.1160-14	1634-04-4	Methyl t-butyl ether (MTBE)	ND	ug / L	1	1	10/18/00
X00388	XG.2000.1160-14	75-09-2	Methylene chloride	ND	ug / L	1	10	10/18/00
X00388	XG.2000.1160-14	91-20-3	Naphthalene	ND	ug / L	1	5	10/18/00
X00388	XG.2000.1160-14	95-47-6	o-Xylene	ND	ug / L	1	1	10/18/00
X00388	XG.2000.1160-14	108-38-3/106-42	p/m Xylenes	ND	ug / L	1	2	10/18/00
X00388	XG.2000.1160-14	100-42-5	Styrene	ND	ug / L	1	1	10/18/00
X00388	XG.2000.1160-14	156-60-5	t-1,2 Dichloroethene	ND	ug / L	1	1	10/18/00
X00388	XG.2000.1160-14	10061-02-6	t-1,3 Dichloropropene	ND	ug / L	1	1	10/18/00
X00388	XG.2000.1160-14	127-18-4	Tetrachloroethene	ND	ug / L	1	1	10/18/00
X00388	XG.2000.1160-14	108-88-3	Toluene	ND	ug / L	1	1	10/18/00
X00388	XG.2000.1160-14	79-01-6	Trichloroethene	ND	ug / L	1	1	10/18/00
X00388	XG.2000.1160-14	75-69-4	Trichlorofluoromethane	ND	ug / L	1	5	10/18/00
X00388	XG.2000.1160-14	108-05-4	Vinyl acetate	ND	ug / L	1	5	10/18/00
X00388	XG.2000.1160-14	75-01-4	Vinyl chloride	ND	ug / L	1	5	10/18/00

Quality Control Summary

Client: CH2MHILL

Project: 0010161 KAFB ST-106

Explanation of codes

D	Not applicable due to sample dilut
L	Not applicable due to MDL proximity

QC Type **MS: Matrix Spike** QC Matrix **WATER**

QC Group	Run Sequence	CAS #	Analyte	Result	Units	Dilution Factor	Detection Limit	Code	Run Date
X00388-011		**SW846 8260A Purgeable VOCs by GC/MS**							
X00388	XG.2000.1100-11	75-34-3	1,1 Dichloroethene	107	% Recovery	1	NA		10/04/00
X00388	XG.2000.1100-11	106-46-7	1,4 Dichlorobenzene	102	% Recovery	1	NA		10/04/00
X00388	XG.2000.1100-11	71-43-2	Benzene	110	% Recovery	1	NA		10/04/00
X00388	XG.2000.1100-11	108-90-7	Chlorobenzene	107	% Recovery	1	NA		10/04/00
X00388	XG.2000.1100-11	108-88-3	Toluene	110	% Recovery	1	NA		10/04/00
X00388	XG.2000.1100-11	79-01-6	Trichloroethene	112	% Recovery	1	NA		10/04/00

QC Type **MSD: Matrix Spike Duplicate Accuracy** QC Matrix **WATER**

QC Group	Run Sequence	CAS #	Analyte	Result	Units	Dilution Factor	Detection Limit	Code	Run Date
X00388-012		**SW846 8260A Purgeable VOCs by GC/MS**							
X00388	XG.2000.1100-12	75-34-3	1,1 Dichloroethene	107	% Recovery	1	NA		10/04/00
X00388	XG.2000.1100-12	106-46-7	1,4 Dichlorobenzene	101	% Recovery	1	NA		10/04/0
X00388	XG.2000.1100-12	71-43-2	Benzene	111	% Recovery	1	NA		10/04
X00388	XG.2000.1100-12	108-90-7	Chlorobenzene	108	% Recovery	1	NA		10/04/00
X00388	XG.2000.1100-12	108-88-3	Toluene	112	% Recovery	1	NA		10/04/00
X00388	XG.2000.1100-12	79-01-6	Trichloroethene	109	% Recovery	1	NA		10/04/00

QC Type **MSD: Matrix Spike Duplicate Precision** QC Matrix **WATER**

QC Group	Run Sequence	CAS #	Analyte	Result	Units	Dilution Factor	Detection Limit	Code	Run Date
X00388-012		**SW846 8260A Purgeable VOCs by GC/MS**							
X00388	XG.2000.1100-12	75-34-3	1,1 Dichloroethene	< 1	RPD	1	NA		10/04/00
X00388	XG.2000.1100-12	106-46-7	1,4 Dichlorobenzene	< 1	RPD	1	NA		10/04/00
X00388	XG.2000.1100-12	71-43-2	Benzene	< 1	RPD	1	NA		10/04/00
X00388	XG.2000.1100-12	108-90-7	Chlorobenzene	1	RPD	1	NA		10/04/00
X00388	XG.2000.1100-12	108-88-3	Toluene	< 1	RPD	1	NA		10/04/00
X00388	XG.2000.1100-12	79-01-6	Trichloroethene	2	RPD	1	NA		10/04/00

Surrogate Summary: QC

Client: CH2MHILL

ect: 0010161 KAFB ST-106

QC Type **LCS** QC Matrix **SOLID**

QC Group	Run Sequence	CAS #	Analyte	Result	Units	Dilution Factor	Detection Limit	Code	Run Date
X00407-002		DRO							
X00407	XG.2000.1150-10	NA	O-terphenyl	101	% Recovery	1	NA		10/17/00
X00408-002		GRO							
X00408	XG.2000.1155-2	NA	4-Bromofluorobenzene-FID	102	% Recovery	1	NA		10/16/00
X00408	XG.2000.1155-2	NA	4-Bromofluorobenzene-PID	ND	% Recovery	1	NA		10/16/00
X00408	XG.2000.1155-2	NA	aaa-Trifluorotoluene-FID	105	% Recovery	1	NA		10/16/00
X00408	XG.2000.1155-2	NA	aaa-Trifluorotoluene-PID	ND	% Recovery	1	NA		10/16/00
X00411-002		BTEXALL							
X00411	XG.2000.1164-9	NA	4-Bromofluorobenzene	101	% Recovery	1	NA		10/18/00
X00411	XG.2000.1164-9	NA	aaa-Trifluorotoluene	98	% Recovery	1	NA		10/18/00
X00411	XG.2000.1164-9	NA	Bromochloromethane	57	% Recovery	1	NA		10/18/00
X00411	XG.2000.1164-9	NA	Bromochloropropane	65	% Recovery	1	NA		10/18/00
X00411	XG.2000.1164-9	NA	Dichlorobutane	153	% Recovery	1	NA		10/18/00

QC Type **LCSD** QC Matrix **SOLID**

QC Group	Run Sequence	CAS #	Analyte	Result	Units	Dilution Factor	Detection Limit	Code	Run Date
X00407-003		DRO							
X00407	XG.2000.1150-11	NA	O-terphenyl	102	% Recovery	1	NA		10/17/00
X00408-003		GRO							
X00408	XG.2000.1155-3	NA	4-Bromofluorobenzene-FID	102	% Recovery	1	NA		10/16/00
X00408	XG.2000.1155-3	NA	4-Bromofluorobenzene-PID	ND	% Recovery	1	NA		10/16/00
X00408	XG.2000.1155-3	NA	aaa-Trifluorotoluene-FID	104	% Recovery	1	NA		10/16/00
X00408	XG.2000.1155-3	NA	aaa-Trifluorotoluene-PID	ND	% Recovery	1	NA		10/16/00
X00411-003		BTEXALL							
X00411	XG.2000.1164-10	NA	4-Bromofluorobenzene	102	% Recovery	1	NA		10/18/00
X00411	XG.2000.1164-10	NA	aaa-Trifluorotoluene	98	% Recovery	1	NA		10/18/00
X00411	XG.2000.1164-10	NA	Bromochloromethane	78	% Recovery	1	NA		10/18/00
X00411	XG.2000.1164-10	NA	Bromochloropropane	110	% Recovery	1	NA		10/18/00
X00411	XG.2000.1164-10	NA	Dichlorobutane	466	% Recovery	1	NA		10/18/00

QC Type **MB** QC Matrix **SOLID**

QC Group	Run Sequence	CAS #	Analyte	Result	Units	Dilution Factor	Detection Limit	Code	Run Date
X00407-001		DRO							
07	XG.2000.1150-9	NA	O-terphenyl	87	% Recovery	1	NA		10/16/00

Surrogate Summary: QC

Client: CH2MHILL

Project: 0010161 KAFB ST-106

X00407-014		DRO							
X00407	XG.2000.1150-26	NA	O-terphenyl	88	% Recovery	1	NA		10/17/00
X00408-001		GRO							
X00408	XG.2000.1155-1	NA	4-Bromofluorobenzene-FID	91	% Recovery	1	NA		10/16/00
X00408	XG.2000.1155-1	NA	4-Bromofluorobenzene-PID	ND	% Recovery	1	NA		10/16/00
X00408	XG.2000.1155-1	NA	aaa-Trifluorotoluene-FID	99	% Recovery	1	NA		10/16/00
X00408	XG.2000.1155-1	NA	aaa-Trifluorotoluene-PID	ND	% Recovery	1	NA		10/16/00
X00408-026		GRO							
X00408	XG.2000.1161-1	NA	4-Bromofluorobenzene-FID	92	% Recovery	1	NA		10/18/00
X00408	XG.2000.1161-1	NA	4-Bromofluorobenzene-PID	ND	% Recovery	1	NA		10/18/00
X00408	XG.2000.1161-1	NA	aaa-Trifluorotoluene-FID	97	% Recovery	1	NA		10/18/00
X00408	XG.2000.1161-1	NA	aaa-Trifluorotoluene-PID	ND	% Recovery	1	NA		10/18/00
X00411-001		BTEXALL							
X00411	XG.2000.1164-8	NA	4-Bromofluorobenzene	100	% Recovery	1	NA		10/18/00
X00411	XG.2000.1164-8	NA	aaa-Trifluorotoluene	100	% Recovery	1	NA		10/18/00
X00411	XG.2000.1164-8	NA	Bromochloromethane	150	% Recovery	1	NA		10/18/00
X00411	XG.2000.1164-8	NA	Bromochloropropane	147	% Recovery	1	NA		10/18/00
X00411	XG.2000.1164-8	NA	Dichlorobutane	60	% Recovery	1	NA		10/18/00
X00411-004		BTEXALL							
X00411	XG.2000.1164-11	NA	4-Bromofluorobenzene	99	% Recovery	1	NA		10/19/00
X00411	XG.2000.1164-11	NA	aaa-Trifluorotoluene	102	% Recovery	1	NA		10/19/00
X00411	XG.2000.1164-11	NA	Bromochloromethane	86	% Recovery	1	NA		10/19
X00411	XG.2000.1164-11	NA	Bromochloropropane	19	% Recovery	1	NA		10/19/00
X00411	XG.2000.1164-11	NA	Dichlorobutane	23	% Recovery	1	NA		10/19/00
X00411-008		BTEXALL							
X00411	XG.2000.1177-1	NA	4-Bromofluorobenzene	102	% Recovery	1	NA		10/23/00
X00411	XG.2000.1177-1	NA	aaa-Trifluorotoluene	100	% Recovery	1	NA		10/23/00
X00411	XG.2000.1177-1	NA	Bromochloromethane	102	% Recovery	1	NA		10/23/00
X00411	XG.2000.1177-1	NA	Bromochloropropane	44	% Recovery	1	NA		10/23/00
X00411	XG.2000.1177-1	NA	Dichlorobutane	58	% Recovery	1	NA		10/23/00

QC Type **MS** QC Matrix **SOLID**

QC Group	Run Sequence	CAS #	Analyte	Result	Units	Dilution Factor	Detection Limit	Code	Run Date
X00407-005		DRO							
X00407	XG.2000.1150-13	NA	O-terphenyl	102	% Recovery	1	NA		10/17/00
X00408-023		GRO							
X00408	XG.2000.1155-15	NA	4-Bromofluorobenzene-FID	95	% Recovery	1	NA		10/17/00
X00408	XG.2000.1155-15	NA	4-Bromofluorobenzene-PID	ND	% Recovery	1	NA		10/17/00
X00408	XG.2000.1155-15	NA	aaa-Trifluorotoluene-FID	99	% Recovery	1	NA		10/17/00
X00408	XG.2000.1155-15	NA	aaa-Trifluorotoluene-PID	ND	% Recovery	1	NA		10/17/00
X00411-006		BTEXALL							
X00411	XG.2000.1164-13	NA	4-Bromofluorobenzene	102	% Recovery	1	NA		10/19
X00411	XG.2000.1164-13	NA	aaa-Trifluorotoluene	104	% Recovery	1	NA		10/19

Surrogate Summary: QC

Client: CH2MHILL

ct: 0010161 KAFB ST-106

X00411	XG.2000.1164-13	NA	Bromochloromethane	69	% Recovery	1	NA	10/19/00
X00411	XG.2000.1164-13	NA	Bromochloropropane	22	% Recovery	1	NA	10/19/00
X00411	XG.2000.1164-13	NA	Dichlorobutane	22	% Recovery	1	NA	10/19/00

QC Type **MSD** QC Matrix **SOLID**

QC Group	Run Sequence	CAS #	Analyte	Result	Units	Dilution Factor	Detection Limit	Code	Run Date
X00407-006		DRO							
X00407	XG.2000.1150-14	NA	O-terphenyl	100	% Recovery	1	NA		10/17/00
X00408-024		GRO							
X00408	XG.2000.1155-16	NA	4-Bromofluorobenzene-FID	103	% Recovery	1	NA		10/17/00
X00408	XG.2000.1155-16	NA	4-Bromofluorobenzene-PID	ND	% Recovery	1	NA		10/17/00
X00408	XG.2000.1155-16	NA	aaa-Trifluorotoluene-FID	103	% Recovery	1	NA		10/17/00
X00408	XG.2000.1155-16	NA	aaa-Trifluorotoluene-PID	ND	% Recovery	1	NA		10/17/00
X00411-007		BTEXALL							
X00411	XG.2000.1164-14	NA	4-Bromofluorobenzene	102	% Recovery	1	NA		10/19/00
X00411	XG.2000.1164-14	NA	aaa-Trifluorotoluene	102	% Recovery	1	NA		10/19/00
X00411	XG.2000.1164-14	NA	Bromochloromethane	27	% Recovery	1	NA		10/19/00
X00411	XG.2000.1164-14	NA	Bromochloropropane	28	% Recovery	1	NA		10/19/00
X[illegible]11	XG.2000.1164-14	NA	Dichlorobutane	66	% Recovery	1	NA		10/19/00

QC Type **LCS** QC Matrix **WATER**

QC Group	Run Sequence	CAS #	Analyte	Result	Units	Dilution Factor	Detection Limit	Code	Run Date
X00388-004		8260							
X00388	XG.2000.1100-4	NA	1,2 Dichloroethane-D4 (SS)	87	% Recovery	1	NA		10/03/00
X00388	XG.2000.1100-4	NA	4-Bromofluorobenzene (SS)	99	% Recovery	1	NA		10/03/00
X00388	XG.2000.1100-4	NA	Dibromofluoromethane (SS)	100	% Recovery	1	NA		10/03/00
X00388	XG.2000.1100-4	NA	Toluene-D8 (SS)	101	% Recovery	1	NA		10/03/00

QC Type **LCSD** QC Matrix **WATER**

QC Group	Run Sequence	CAS #	Analyte	Result	Units	Dilution Factor	Detection Limit	Code	Run Date
X00388-005		8260							
X00388	XG.2000.1100-5	NA	1,2 Dichloroethane-D4 (SS)	86	% Recovery	1	NA		10/03/00
X00388	XG.2000.1100-5	NA	4-Bromofluorobenzene (SS)	99	% Recovery	1	NA		10/03/00
X00388	XG.2000.1100-5	NA	Dibromofluoromethane (SS)	100	% Recovery	1	NA		10/03/00
X00388	XG.2000.1100-5	NA	Toluene-D8 (SS)	101	% Recovery	1	NA		10/03/00

Surrogate Summary: QC

Client: **CH2MHILL**

Project: **0010161** **KAFB ST-106**

QC Type **MB** QC Matrix **WATER**

QC Group	Run Sequence	CAS #	Analyte	Result	Units	Dilution Factor	Detection Limit	Code	Run Date
X00388-001		**8260**							
X00388	XG.2000.1100-1	NA	1,2 Dichloroethane-D4 (SS)	92	% Recovery	1	NA		10/03/00
X00388	XG.2000.1100-1	NA	4-Bromofluorobenzene (SS)	99	% Recovery	1	NA		10/03/00
X00388	XG.2000.1100-1	NA	Dibromofluoromethane (SS)	100	% Recovery	1	NA		10/03/00
X00388	XG.2000.1100-1	NA	Toluene-D8 (SS)	101	% Recovery	1	NA		10/03/00
X00388-006		**8260**							
X00388	XG.2000.1100-6	NA	1,2 Dichloroethane-D4 (SS)	92	% Recovery	1	NA		10/04/00
X00388	XG.2000.1100-6	NA	4-Bromofluorobenzene (SS)	99	% Recovery	1	NA		10/04/00
X00388	XG.2000.1100-6	NA	Dibromofluoromethane (SS)	101	% Recovery	1	NA		10/04/00
X00388	XG.2000.1100-6	NA	Toluene-D8 (SS)	100	% Recovery	1	NA		10/04/00
X00388-013		**8260**							
X00388	XG.2000.1160-1	NA	1,2 Dichloroethane-D4 (SS)	90	% Recovery	1	NA		10/11/00
X00388	XG.2000.1160-1	NA	4-Bromofluorobenzene (SS)	99	% Recovery	1	NA		10/11/00
X00388	XG.2000.1160-1	NA	Dibromofluoromethane (SS)	100	% Recovery	1	NA		10/11/00
X00388	XG.2000.1160-1	NA	Toluene-D8 (SS)	99	% Recovery	1	NA		10/11/00
X00388-016		**8260**							
X00388	XG.2000.1160-3	NA	1,2 Dichloroethane-D4 (SS)	92	% Recovery	1	NA		10/12
X00388	XG.2000.1160-3	NA	4-Bromofluorobenzene (SS)	99	% Recovery	1	NA		10/12/00
X00388	XG.2000.1160-3	NA	Dibromofluoromethane (SS)	99	% Recovery	1	NA		10/12/00
X00388	XG.2000.1160-3	NA	Toluene-D8 (SS)	101	% Recovery	1	NA		10/12/00
X00388-030		**8260**							
X00388	XG.2000.1160-13	NA	1,2 Dichloroethane-D4 (SS)	91	% Recovery	1	NA		10/13/00
X00388	XG.2000.1160-13	NA	4-Bromofluorobenzene (SS)	101	% Recovery	1	NA		10/13/00
X00388	XG.2000.1160-13	NA	Dibromofluoromethane (SS)	99	% Recovery	1	NA		10/13/00
X00388	XG.2000.1160-13	NA	Toluene-D8 (SS)	100	% Recovery	1	NA		10/13/00
X00388-033		**8260**							
X00388	XG.2000.1160-14	NA	1,2 Dichloroethane-D4 (SS)	90	% Recovery	1	NA		10/18/00
X00388	XG.2000.1160-14	NA	4-Bromofluorobenzene (SS)	99	% Recovery	1	NA		10/18/00
X00388	XG.2000.1160-14	NA	Dibromofluoromethane (SS)	98	% Recovery	1	NA		10/18/00
X00388	XG.2000.1160-14	NA	Toluene-D8 (SS)	99	% Recovery	1	NA		10/18/00

QC Type **MS** QC Matrix **WATER**

QC Group	Run Sequence	CAS #	Analyte	Result	Units	Dilution Factor	Detection Limit	Code	Run Date
X00388-011		**8260**							
X00388	XG.2000.1100-11	NA	1,2 Dichloroethane-D4 (SS)	93	% Recovery	1	NA		10/04/00
X00388	XG.2000.1100-11	NA	4-Bromofluorobenzene (SS)	100	% Recovery	1	NA		10/04/00
X00388	XG.2000.1100-11	NA	Dibromofluoromethane (SS)	102	% Recovery	1	NA		10/04/
X00388	XG.2000.1100-11	NA	Toluene-D8 (SS)	102	% Recovery	1	NA		10/04/

Surrogate Summary: QC

Client: **CH2MHILL**

ct: **0010161** **KAFB ST-106**

QC Type **MSD** QC Matrix **WATER**

QC Group	Run Sequence	CAS #	Analyte	Result	Units	Dilution Factor	Detection Limit	Code	Run Date
X00388-012		**8260**							
X00388	XG.2000.1100-12	NA	1,2 Dichloroethane-D4 (SS)	93	% Recovery	1	NA		10/04/00
X00388	XG.2000.1100-12	NA	4-Bromofluorobenzene (SS)	98	% Recovery	1	NA		10/04/00
X00388	XG.2000.1100-12	NA	Dibromofluoromethane (SS)	101	% Recovery	1	NA		10/04/00
X00388	XG.2000.1100-12	NA	Toluene-D8 (SS)	100	% Recovery	1	NA		10/04/00

Surrogate Summary: Fraction

Client: **CH2MHILL**
ect: **0010161** KAFB ST-106

Client Sample ID **SB-27-345'** Sample Matrix **SOIL**

QC Group	Run Sequence	CAS #	Analyte	Result	Units	Dilution Factor	Detection Limit	Code	Run Date
0010161-01A		DRO							**X00407-004**
X00407	XG.2000.1150-12	NA	O-terphenyl	79	% Recovery	1	NA		10/17/00
0010161-01A		GRO							**X00408-015**
X00408	XG.2000.1155-10	NA	4-Bromofluorobenzene-FID	93	% Recovery	1	NA		10/17/00
X00408	XG.2000.1155-10	NA	4-Bromofluorobenzene-PID	ND	% Recovery	1	NA		10/17/00
X00408	XG.2000.1155-10	NA	aaa-Trifluorotoluene-FID	96	% Recovery	1	NA		10/17/00
X00408	XG.2000.1155-10	NA	aaa-Trifluorotoluene-PID	ND	% Recovery	1	NA		10/17/00
0010161-01B		BTEXALL							**X00411-005**
X00411	XG.2000.1164-12	NA	4-Bromofluorobenzene	98	% Recovery	1	NA		10/19/00
X00411	XG.2000.1164-12	NA	aaa-Trifluorotoluene	103	% Recovery	1	NA		10/19/00
X00411	XG.2000.1164-12	NA	Bromochloromethane	70	% Recovery	1	NA		10/19/00
X00411	XG.2000.1164-12	NA	Bromochloropropane	58	% Recovery	1	NA		10/19/00
X00411	XG.2000.1164-12	NA	Dichlorobutane	76	% Recovery	1	NA		10/19/00
0010161-01B		BTEXALL							**X00411-010**
X00411	XG.2000.1177-3	NA	4-Bromofluorobenzene	102	% Recovery	1	NA		10/23/00
X00411	XG.2000.1177-3	NA	aaa-Trifluorotoluene	101	% Recovery	1	NA		10/23/00
1	XG.2000.1177-3	NA	Bromochloromethane	79	% Recovery	1	NA		10/23/00
X00411	XG.2000.1177-3	NA	Bromochloropropane	84	% Recovery	1	NA		10/23/00
X00411	XG.2000.1177-3	NA	Dichlorobutane	41	% Recovery	1	NA		10/23/00

Client Sample ID **TRIP** Sample Matrix **H2O**

QC Group	Run Sequence	CAS #	Analyte	Result	Units	Dilution Factor	Detection Limit	Code	Run Date
0010161-02A		8260							**X00388-034**
X00388	XG.2000.1160-15	NA	1,2 Dichloroethane-D4 (SS)	92	% Recovery	1	NA		10/18/00
X00388	XG.2000.1160-15	NA	4-Bromofluorobenzene (SS)	99	% Recovery	1	NA		10/18/00
X00388	XG.2000.1160-15	NA	Dibromofluoromethane (SS)	100	% Recovery	1	NA		10/18/00
X00388	XG.2000.1160-15	NA	Toluene-D8 (SS)	99	% Recovery	1	NA		10/18/00

Chain of Custody Record

A[illegible]IGAI ANALYTICAL LABORATORIES, INC.

7300 JEFFERSON N.E.
ALBUQUERQUE, NEW MEXICO 871[illegible]
(505) 345-8964

3332 WEDGEWOOD
EL PASO, TEXAS 79925
(915) 593-6000

127 EASTGATE DRIVE, 212-C
LOS ALAMOS, NEW MEXICO 87544
(505) 662-2558

Lab job No.: 0010161 Date _____

Page 1 of 1

Client CH2M Hill

Address 6001 Indian School Rd NE #350

City / State / Zip ABQ NM 87110

Project Name / Number KAFB ST. 106

Contract / Purchase Order / Quote _____

Project Manager / Contact B LEFEVRE / A HALLORAN

Telephone No. 884 5600

Fax No. 883 7507

Samplers : (signature) [illegible]

Analysis Required

AAL Fraction Number	Field Sample Number / Location	Date	Time	Sample Type	Type / Size of Container	Preservation Temp.	Preservation Chemical	No. of Containers	GRO/DRO	8015	BTEX	VOC								Remarks
[illegible]	SB-27-345	10/15	[illegible]	soil	4 oz VOA	ice	No	2	X	X										
05A	TRIP	10/15	1200	1126	40 mL VOA	ice	HCl	1			X									

Relinquished by:	Date	Received by:	Relinquished by:	Date	Received by:
Signature [illegible]	10/16/[illegible]	Signature [illegible]	Signature _____		Signature _____
Printed [illegible]	Time 8:35	Printed A. TRAIL	Printed _____	Time	Printed _____
Company CH2M Hill		Company AAL	Company _____		Company _____
Reason TRANSFER		Reason [illegible]	Reason _____		Reason _____

Method of Shipment: _____

Shipment No. _____

Special Instructions: _____

Comments: _____

After analysis, samples are to be:

- ❑ Disposed of (additional fee)
- ❑ Stored (30 days max)
- ❑ Stored over 30 days (additional fee)
- ❑ Returned to customer

COURIER

RECEIVED NOV 1 4 2000
ASSAIGAI
ANALYTICAL
LABORATORIES, INC.
7300 Jefferson, NE • Albuquerque, New Mexico 87109 • (505) 345-8964 • FAX (505) 345-7259
3332 Wedgewood Dr., Suite N • El Paso, Texas 79925 • (915) 593-6000 • FAX (915) 593-7820
127 Eastgate Drive, 212-C • Los Alamos, New Mexico 87544 • (505) 662-2558

Explanation of codes	
B	analyte detected in Method Blank
E	result is estimated
H	analyzed out of hold time
N	tentatively identified compound
S	subcontracted
1-9	see footnote

CH2MHILL
attn: **AMY HALLORAN**
6001 INDIAN SCHOOL RD NE STE 350
ALBUQUERQUE, NM 87110-4140

Assaigai Analytical Laboratories, Inc.

Certificate of Analysis

Client: **CH2MHILL**
Project: **0010244 KAFB ST106**

William P. Biava: President of Assaigai Analytical Laboratories, Inc.

Client Sample ID: ***SB-27-505 CUTTINGS*** Sample Matrix: ***SOIL*** Sample Collected: ***10/16/00 12:20:00***

Group	Run Sequence	CAS #	Analyte	Result	Units	Dilution Factor	Detection Limit	Code	Run Date
0010244-01A		**SW846 5030A/8015A GRO by GC/FID**							
X00385	TT.2000.1237-2		Gasoline Range Organics	ND	mg/Kg	1	0.25		10/27/00
0010244-01A		**SW846 ME/8015A Diesel Range Organics by GC/FID**							
X00407	XG.2000.1238-2		Diesel Range Organics	ND	mg / Kg	1	25		11/06/00

**** Sample specific Detection Limit is determined by multiplying the sample Dilution Factor by the listed Reporting Detection Limit. ****
**** ND = Not detected: less than the sample specific Detection Limit. Results relate only to the items tested. ****

Member:
American Council of
Independent Laboratories, Inc.

REPRODUCTION OF THIS REPORT IN LESS THAN FULL REQUIRES THE WRITTEN CONSENT OF AAL.
THIS REPORT MAY NOT BE USED IN ANY MANNER BY THE CLIENT OR ANY OTHER THIRD PARTY TO CLAIM
PRODUCT ENDORSEMENT BY ANY ACCREDITATION PROGRAM

Assaigai Analytical Laboratories, Inc.

Quality Control Summary

Client: CH2MHILL

Project: 0010244 KAFB ST106

Explanation of codes	
D	*Not applicable due to sample dilution*
L	*Not applicable due to MDL proximity*

QC Type **LCS: Lab Control Spike** QC Matrix **SOLID**

QC Group	Run Sequence	CAS #	Analyte	Result	Units	Dilution Factor	Detection Limit	Code	Run Date
X00407-002		SW846 ME/8015A Diesel Range Organics by GC/FID							
X00407	XG.2000.1150-10		Diesel Range Organics	100	% Recovery	1	NA		10/17/00

QC Type **LCSD: Lab Control Spike Duplicate Accuracy** QC Matrix **SOLID**

QC Group	Run Sequence	CAS #	Analyte	Result	Units	Dilution Factor	Detection Limit	Code	Run Date
X00407-003		SW846 ME/8015A Diesel Range Organics by GC/FID							
X00407	XG.2000.1150-11		Diesel Range Organics	103	% Recovery	1	NA		10/17/00

QC Type **LCSD: Lab Control Spike Duplicate Precision** QC Matrix **SOLID**

QC Group	Run Sequence	CAS #	Analyte	Result	Units	Dilution Factor	Detection Limit	Code	Run Date
7-003		SW846 ME/8015A Diesel Range Organics by GC/FID							
X00407	XG.2000.1150-11		Diesel Range Organics	3	RPD	1	NA		10/17/00

QC Type **MB: Method Blank** QC Matrix **SOLID**

QC Group	Run Sequence	CAS #	Analyte	Result	Units	Dilution Factor	Detection Limit	Code	Run Date
00.1237-1		SW846 5030A/8015A GRO by GC/FI							
X00385	TT.2000.1237-1		Gasoline Range Organics	ND	mg/Kg	1	0.25		10/27/00
X00407-001		SW846 ME/8015A Diesel Range Organics by GC/FID							
X00407	XG.2000.1150-9		Diesel Range Organics	ND	mg / Kg	1	25		10/16/00
X00407-014		SW846 ME/8015A Diesel Range Organics by GC/FID							
X00407	XG.2000.1150-26		Diesel Range Organics	ND	mg / Kg	1	25		10/17/00
X00407-017		SW846 ME/8015A Diesel Range Organics by GC/FID							
X00407	XG.2000.1238-1		Diesel Range Organics	ND	mg / Kg	1	25		11/06/00

QC Type **MS: Matrix Spike** QC Matrix **SOLID**

QC Group	Run Sequence	CAS #	Analyte	Result	Units	Dilution Factor	Detection Limit	Code	Run Date
07-005		SW846 ME/8015A Diesel Range Organics by GC/FID							
07	XG.2000.1150-13		Diesel Range Organics	110	% Recovery	1	NA		10/17/00

Quality Control Summary

Client: CH2MHILL
Project: 0010244 KAFB ST106

Explanation of codes	
D	*Not applicable due to sample dilu*
L	*Not applicable due to MDL proxim*

QC Type **MSD: Matrix Spike Duplicate Accuracy** QC Matrix **SOLID**

QC Group	Run Sequence	CAS #	Analyte	Result	Units	Dilution Factor	Detection Limit	Code	Run Date
X00407-006		**SW846 ME/8015A**	**Diesel Range Organics by GC/FID**						
X00407	XG.2000.1150-14		Diesel Range Organics	108	% Recovery	1	NA		10/17/00

QC Type **MSD: Matrix Spike Duplicate Precision** QC Matrix **SOLID**

QC Group	Run Sequence	CAS #	Analyte	Result	Units	Dilution Factor	Detection Limit	Code	Run Date
X00407-006		**SW846 ME/8015A**	**Diesel Range Organics by GC/FID**						
X00407	XG.2000.1150-14		Diesel Range Organics	2	RPD	1	NA		10/17/00

Assaigai Analytical Laboratories, Inc.

Surrogate Summary: QC

Client: CH2MHILL

ect: 0010244 KAFB ST106

QC Type **LCS** QC Matrix **SOLID**

QC Group	Run Sequence	CAS #	Analyte	Result	Units	Dilution Factor	Detection Limit	Code	Run Date
X00407-002		DRO							
X00407	XG.2000.1150-10	NA	O-terphenyl	101	% Recovery	1	NA		10/17/00

QC Type **LCSD** QC Matrix **SOLID**

QC Group	Run Sequence	CAS #	Analyte	Result	Units	Dilution Factor	Detection Limit	Code	Run Date
X00407-003		DRO							
X00407	XG.2000.1150-11	NA	O-terphenyl	102	% Recovery	1	NA		10/17/00

QC Type **MB** QC Matrix **SOLID**

QC Group	Run Sequence	CAS #	Analyte	Result	Units	Dilution Factor	Detection Limit	Code	Run Date
07-001		DRO							
X00407	XG.2000.1150-9	NA	O-terphenyl	87	% Recovery	1	NA		10/16/00
X00407-014		DRO							
X00407	XG.2000.1150-26	NA	O-terphenyl	88	% Recovery	1	NA		10/17/00
X00407-017		DRO							
X00407	XG.2000.1238-1	NA	O-terphenyl	75	% Recovery	1	NA		11/06/00

QC Type **MS** QC Matrix **SOLID**

QC Group	Run Sequence	CAS #	Analyte	Result	Units	Dilution Factor	Detection Limit	Code	Run Date
X00407-005		DRO							
X00407	XG.2000.1150-13	NA	O-terphenyl	102	% Recovery	1	NA		10/17/00

QC Type **MSD** QC Matrix **SOLID**

QC Group	Run Sequence	CAS #	Analyte	Result	Units	Dilution Factor	Detection Limit	Code	Run Date
X00407-006		DRO							
X00407	XG.2000.1150-14	NA	O-terphenyl	100	% Recovery	1	NA		10/17/00

Assaigai Analytical Laboratories, Inc.

Surrogate Summary: Fraction

Client: **CH2MHILL**

ect: **0010244** **KAFB ST106**

Client Sample ID **SB-27-505 CUTTINGS** Sample Matrix **SOIL**

QC Group	Run Sequence	CAS #	Analyte	Result	Units	Dilution Factor	Detection Limit	Code	Run Date
0010244-01A		DRO							X00407-018
X00407	XG.2000.1238-2	NA	O-terphenyl	.71	% Recovery	1	NA		11/06/00

A. AIGAI
ANALYTICAL
LABORATORIES, INC.

Chain of Custody Record

7300 JEFFERSON N.E.
ALBUQUERQUE, NEW MEXICO 87
(505) 345-8964

3332 WEDGEWOOD
EL PASO, TEXAS 79925
(915) 593-6000

127 EASTGATE DRIVE, 212-C
LOS ALAMOS, NEW MEXICO 87544
(505) 662-2558

Lab job No.: 10244 Date 10/23

Page 1 of 1

Client: CH2M HILL

Address: 6001 Indian School Rd #350 NE

City / State / Zip: ABQ NM 87110

Project Name / Number: KAFB SITE

Contract / Purchase Order / Quote

Project Manager / Contact: B LEFEVRE / M HALLORAN

Telephone No.: 884 5600

Fax No.: 3832507

Samplers: (signature): W J LeFevre

Analysis Required: No. of Containers; VOA DRO (STP MT)

AAL Fraction Number	Field Sample Number / Location	Date	Time	Sample Type	Type / Size of Container	Preservation Temp.	Preservation Chemical	No. of Containers	VOA	DRO (STP MT)									Remarks
1	SB-27-005 Cuttings	10/16	1220	Soil	4 oz VOA	ICE	NO	1											

Relinquished by:	Date	Received by:	Relinquished by:	Date	Received by:
Signature: W J LeFevre	10/23	Signature: [illegible]	Signature:		Signature:
Printed: W. J. LeFevre	Time	Printed: Steven Cramer	Printed:	Time	Printed:
Company: CH2M HILL	12:00pm	Company: AAL	Company:		Company:
Reason: XFR TO LAB'S Courier		Reason: Analysis	Reason:		Reason:

Method of Shipment:

Shipment No.

Special Instructions:

Comments:

After analysis, samples are to be:

- ❑ Disposed of (additional fee)
- ❑ Stored (30 days max)
- ❑ Stored over 30 days (additional fee)
- ❑ Returned to customer

COURIER

RECEIVED NOV 2 2 2000

ASSAIGAI
ANALYTICAL
LABORATORIES, INC.
7300 Jefferson, NE • Albuquerque, New Mexico 87109 • (505) 345-8964 • FAX (505) 345-7259
3332 Wedgewood Dr., Suite N • El Paso, Texas 79925 • (915) 593-6000 • FAX (915) 593-7820
127 Eastgate Drive, 212-C • Los Alamos, New Mexico 87544 • (505) 662-2550

Explanation of codes	
B	analyte detected in Method Blank
E	result is estimated
H	analyzed out of hold time
N	tentatively identified compound
S	subcontracted
1-9	see footnote

CH2MHILL
attn: **AMY HALLORAN**
6001 INDIAN SCHOOL RD NE STE 350
ALBUQUERQUE, NM 87110-4140

Assaigai Analytical Laboratories, Inc.

Certificate of Analysis

Client: **CH2MHILL**
Project: **0011129** **KAFB BULK FUELS FACILITY**

William P. Biava: President of Assaigai Analytical Laboratories, Inc.

Client Sample ID ***SB-28-30*** Sample Matrix ***SOIL*** Sample Collected ***11/15/00 12:25:00***

QC Group	Run Sequence	CAS #	Analyte	Result	Units	Dilution Factor	Detection Limit	Code	Run Date
0011129-01A		**SW846 ME/8015A Diesel Range Organics by GC/FID**							
X00441	XG.2000.1276-5		Diesel Range Organics	ND	mg / Kg	1	25		11/16/00
0011129-01B		**SW846 5030A/8015A GRO by GC/FID**							
X00443	XG.2000.1275-4		Gasoline Range Organics	ND	mg / Kg	1	0.25		11/16/00

Client Sample ID ***SB-28-50*** Sample Matrix ***SOIL*** Sample Collected ***11/15/00 13:15:00***

QC Group	Run Sequence	CAS #	Analyte	Result	Units	Dilution Factor	Detection Limit	Code	Run Date
0011129-02A		**SW846 ME/8015A Diesel Range Organics by GC/FID**							
X00441	XG.2000.1276-8		Diesel Range Organics	ND	mg / Kg	1	25		11/16/00
0011129-02B		**SW846 5030A/8015A GRO by GC/FID**							
X00443	XG.2000.1275-5		Gasoline Range Organics	ND	mg / Kg	1	0.25		11/16/00

Member:
American Council of
Independent Laboratories, Inc.

REPRODUCTION OF THIS REPORT IN LESS THAN FULL REQUIRES THE WRITTEN CONSENT OF AAL
THIS REPORT MAY NOT BE USED IN ANY MANNER BY THE CLIENT OR ANY OTHER THIRD PARTY TO CLAIM
PRODUCT ENDORSEMENT BY ANY ACCREDITATION PROGRAM.

Assaigai Analytical Laboratories, Inc.

Certificate of Analysis

Client: **CH2MHILL**

Project: **0011129** **KAFB BULK FUELS FACILITY**

Client Sample ID ***SB-28-60*** Sample Matrix ***SOIL*** Sample Collected ***11/15/00 15:45:00***

QC Group	Run Sequence	CAS #	Analyte	Result	Units	Dilution Factor	Detection Limit	Code	Run Date
0011129-03A		**SW846 ME/8015A Diesel Range Organics by GC/FID**							
X00441	XG.2000.1276-9		Diesel Range Organics	ND	mg / Kg	1	25		11/16/00
0011129-03B		**SW846 5030A/8015A GRO by GC/FID**							
X00443	XG.2000.1275-6		Gasoline Range Organics	ND	mg / Kg	1	0.25		11/16/00

Client Sample ID ***SB-28-70*** Sample Matrix ***SOIL*** Sample Collected ***11/15/00 16:15:00***

QC Group	Run Sequence	CAS #	Analyte	Result	Units	Dilution Factor	Detection Limit	Code	Run Date
0011129-04A		**SW846 ME/8015A Diesel Range Organics by GC/FID**							
X00441	XG.2000.1276-10		Diesel Range Organics	ND	mg / Kg	1	25		11/16/00
0011129-04B		**SW846 5030A/8015A GRO by GC/FID**							
X00443	XG.2000.1275-7		Gasoline Range Organics	ND	mg / Kg	1	0.25		11/16

**** Sample specific Detection Limit is determined by multiplying the sample Dilution Factor by the listed Reporting Detection Limit. ****

**** ND = Not detected: less than the sample specific Detection Limit. Results relate only to the items tested. ****

CH2MHILL Applied Sciences Lab
CHAIN OF CUSTODY RECORD
AND AGREEMENT TO PERFORM SERVICES

CVO 2300 NW Walnut Boulevard
Corvallis, OR 97330-3638
(541) 752-4271 FAX (541) 752-0276

WO# 11129

COC # _____

Project # 160600	Purchase Order #
Project Name [illegible] PROJ	
Company Name CH2MHILL	
Project Manager or Contact & Phone # S Murchak 344 5600	Report Copy to:
Requested Completion Date: 24 hr turnaround	Site ID ST-106
Sample Disposal: Dispose ☐ Return ☐	

Sampling Date	Time	Type COMP	Type GRAB	Matrix WATER	Matrix SOIL	Matrix AIR	CLIENT SAMPLE ID (9 CHARACTERS)	LAB QC	TOTAL # OF CONTAINERS	8015B GRO/DRO	VOC	SVOC	BTEX						
										Preservative: none									
11/15	1325		X		X		SB-28-30		2	X									
11/15	1515		X		X		SB-28-50		2	X									
11/15	1545		X		X		SB-28-60		2	X									
11/15	1615		X		X		SB-28-70		2	X									

THIS AREA FOR LAB USE ONLY		
Lab #	Page	of
Lab PM	Custody Review	
Log In	LIMS Verification	
pH	Custody Seals Y N	
	Ice Y N	
QC Level 1 2 3 Other _____		
Cooler Temperature		
Alternate Description	Lab ID	

Relinquished By [illegible] 1630 11/15	Date/Time	Received By	Empty Bottles / Date/Time
Sampled By and Title [illegible] (Please sign and print name)	Date/Time	Relinquished By (Please sign and print name)	Date/Time
Received By [illegible] (Please sign and print name)	Date/Time	Relinquished By (Please sign and print name)	Date/Time
Received By (Please sign and print name)	Date/Time	Shipped Via UPS Fed-Ex Other _____	Shipping #

Special Instructions:

Instructions and Agreement Provisions on Reverse Side

DISTRIBUTION: Original - LAB, Yellow - LAB, Pink - Client

ASSAIGAI
ANALYTICAL
LABORATORIES, INC.
7300 Jefferson, NE • Albuquerque, New Mexico 87109 • (505) 345-8964 • FAX (505) 345-7259
3332 Wedgewood Dr., Suite N • El Paso, Texas 79925 • (915) 593-6000 • FAX (915) 593-7820
127 Eastgate Drive, 212-C • Los Alamos, New Mexico 87544 • (505) 662-2556

RECEIVED DEC - 3 2000

Explanation of codes

B	*analyte detected in Method Blank*
E	*result is estimated*
H	*analyzed out of hold time*
N	*tentatively identified compound*
S	*subcontracted*
1-9	*see footnote*

CH2MHILL
attn: AMY HALLORAN
6001 INDIAN SCHOOL RD NE STE 350
ALBUQUERQUE, NM 87110-4140

Assaigai Analytical Laboratories, Inc.

Certificate of Analysis

Client: CH2MHILL
Project: **0011136** **KAFB ST-106**

William P. Biava: President of Assaigai Analytical Laboratories, Inc.

Client Sample ID ***SB-28-80*** Sample Matrix ***SOIL*** Sample Collected ***11/15/00 16:45:00***

QC Group	Run Sequence	CAS #	Analyte	Result	Units	Dilution Factor	Detection Limit	Code	Run Date
0011136-01A		**SW846 5030A/8015A GRO by GC/FID**							
X00443	XG.2000.1279-1		Gasoline Range Organics	ND	mg / Kg	1	0.25		11/16/00
0011136-01B		**SW846 ME/8015A Diesel Range Organics by GC/FID**							
X00441	XG.2000.1280-1		Diesel Range Organics	ND	mg / Kg	1	25		11/16/00

Client Sample ID ***SB-28-100*** Sample Matrix ***SOIL*** Sample Collected ***11/16/00 09:35:00***

QC Group	Run Sequence	CAS #	Analyte	Result	Units	Dilution Factor	Detection Limit	Code	Run Date
0011136-02A		**SW846 5030A/8015A GRO by GC/FID**							
X00443	XG.2000.1279-2		Gasoline Range Organics	ND	mg / Kg	1	0.25		11/16/00
0011136-02A		**SW846 8260A Purgeable VOCs by GC/MS**							
X00423	XG.2000.1292-4	75-34-3	1,1 Dichloroethane	ND	mg / Kg	1	0.005	1	11/17/00
X00423	XG.2000.1292-4	75-34-3	1,1 Dichloroethene	ND	mg / Kg	1	0.005	1	11/17/00
X00423	XG.2000.1292-4	71-55-6	1,1,1 Trichloroethane	ND	mg / Kg	1	0.005	1	11/17/00
X00423	XG.2000.1292-4	630-20-6	1,1,1,2 Tetrachloroethane	ND	mg / Kg	1	0.005	1	11/17/00
X00423	XG.2000.1292-4	79-00-5	1,1,2 Trichloroethane	ND	mg / Kg	1	0.005	1	11/17/00
X00423	XG.2000.1292-4	79-34-5	1,1,2,2 Tetrachloroethane	ND	mg / Kg	1	0.005	1	11/17/00
X00423	XG.2000.1292-4	106-93-4	1,2 Dibromoethane (EDB)	0.026	mg / Kg	1	0.005	1	11/17/00
X00423	XG.2000.1292-4	95-50-1	1,2 Dichlorobenzene	ND	mg / Kg	1	0.005	1	11/17/00

Member
American Council of
Independent Laboratories, Inc.

REPRODUCTION OF THIS REPORT IN LESS THAN FULL REQUIRES THE WRITTEN CONSENT OF AAI
THIS REPORT MAY NOT BE USED IN ANY MANNER BY THE CLIENT OR ANY OTHER THIRD PARTY TO CLAIM
PRODUCT ENDORSEMENT BY ANY ACCREDITATION PROGRAM

Certificate of Analysis

Client: **CH2MHILL**

Project: **0011136** **KAFB ST-106**

X00423	XG.2000.1292-4	107-06-2	1,2 Dichloroethane	ND	mg / Kg	1	0.005	1	11/17/00
X00423	XG.2000.1292-4	78-87-5	1,2 Dichloropropane	ND	mg / Kg	1	0.005	1	11/17/00
X00423	XG.2000.1292-4	96-18-4	1,2,3 Trichloropropane	ND	mg / Kg	1	0.005	1	11/17/00
X00423	XG.2000.1292-4	95-63-6	1,2,4-Trimethylbenzene	ND	mg / Kg	1	0.005	1	11/17/00
X00423	XG.2000.1292-4	541-73-1	1,3 Dichlorobenzene	ND	mg / Kg	1	0.005	1	11/17/00
X00423	XG.2000.1292-4	108-67-8	1,3,5-Trimethylbenzene	ND	mg / Kg	1	0.005	1	11/17/00
X00423	XG.2000.1292-4	764-41-0	1,4 Dichloro-2-butene	ND	mg / Kg	1	0.05	1	11/17/00
X00423	XG.2000.1292-4	106-46-7	1,4 Dichlorobenzene	ND	mg / Kg	1	0.005	1	11/17/00
X00423	XG.2000.1292-4	78-93-3	2-Butanone (MEK)	0.24	mg / Kg	1	0.025	1	11/17/00
X00423	XG.2000.1292-4	110-75-8	2-Chloroethylvinylether	ND	mg / Kg	1	0.025	1	11/17/00
X00423	XG.2000.1292-4	591-78-6	2-Hexanone (MBK)	ND	mg / Kg	1	0.025	1	11/17/00
X00423	XG.2000.1292-4	108-10-1	4-Methyl-2-pentanone (MIBK)	ND	mg / Kg	1	0.025	1	11/17/00
X00423	XG.2000.1292-5	67-64-1	Acetone	1.8	mg / Kg	10	0.05	1	11/17/00
X00423	XG.2000.1292-4	107-02-8	Acrolein	ND	mg / Kg	1	0.1	1	11/17/00
X00423	XG.2000.1292-4	107-13-1	Acrylonitrile	ND	mg / Kg	1	0.1	1	11/17/00
X00423	XG.2000.1292-4	71-43-2	Benzene	0.018	mg / Kg	1	0.005	1	11/17/00
X00423	XG.2000.1292-4	75-27-4	Bromodichloromethane	ND	mg / Kg	1	0.005	1	11/17/00
X00423	XG.2000.1292-4	75-25-2	Bromoform	ND	mg / Kg	1	0.005	1	11/17/00
X00423	XG.2000.1292-4	74-83-9	Bromomethane	ND	mg / Kg	1	0.025	1	11/17/00
X00423	XG.2000.1292-4	75-15-0	Carbon disulfide	ND	mg / Kg	1	0.025	1	11/17/00
X00423	XG.2000.1292-4	56-23-5	Carbon tetrachloride	ND	mg / Kg	1	0.005	1	11/17/00
X00423	XG.2000.1292-4	108-90-7	Chlorobenzene	ND	mg / Kg	1	0.005	1	11/17/00
X00423	XG.2000.1292-4	124-48-1	Chlorodibromomethane	ND	mg / Kg	1	0.005	1	11/17/00
X00423	XG.2000.1292-4	75-00-3	Chloroethane	ND	mg / Kg	1	0.025	1	11/17/
X00423	XG.2000.1292-4	67-66-3	Chloroform	ND	mg / Kg	1	0.005	1	11/17/00
X00423	XG.2000.1292-4	74-87-3	Chloromethane	ND	mg / Kg	1	0.025	1	11/17/00
X00423	XG.2000.1292-4	156-59-2	cis-1,2 dichloroethene	ND	mg / Kg	1	0.005	1	11/17/00
X00423	XG.2000.1292-4	10061-01-5	cis-1,3 dichloropropene	ND	mg / Kg	1	0.005	1	11/17/00
X00423	XG.2000.1292-4	74-95-3	Dibromomethane	ND	mg / Kg	1	0.005	1	11/17/00
X00423	XG.2000.1292-4	97-63-2	Ethyl methacrylate	ND	mg / Kg	1	0.025	1	11/17/00
X00423	XG.2000.1292-4	100-41-4	Ethylbenzene	ND	mg / Kg	1	0.005	1	11/17/00
X00423	XG.2000.1292-4		Freon 113	ND	mg / Kg	1	0.025	1	11/17/00
X00423	XG.2000.1292-4	75-71-8	Freon 12	ND	mg / Kg	1	0.05	1	11/17/00
X00423	XG.2000.1292-4	74-88-4	Iodomethane	ND	mg / Kg	1	0.025	1	11/17/00
X00423	XG.2000.1292-4	1634-04-4	Methyl t-butyl ether (MTBE)	ND	mg / Kg	1	0.005	1	11/17/00
X00423	XG.2000.1292-4	75-09-2	Methylene chloride	ND	mg / Kg	1	0.05	1	11/17/00
X00423	XG.2000.1292-4	91-20-3	Naphthalene	ND	mg / Kg	1	0.025	1	11/17/00
X00423	XG.2000.1292-4	95-47-6	o-Xylene	ND	mg / Kg	1	0.005	1	11/17/00
X00423	XG.2000.1292-4	108-38-3/106-42	p/m Xylenes	ND	mg / Kg	1	0.01	1	11/17/00
X00423	XG.2000.1292-4	100-42-5	Styrene	ND	mg / Kg	1	0.005	1	11/17/00
X00423	XG.2000.1292-4	156-60-5	t-1,2 Dichloroethene	ND	mg / Kg	1	0.005	1	11/17/00
X00423	XG.2000.1292-4	10061-02-6	t-1,3 Dichloropropene	ND	mg / Kg	1	0.005	1	11/17/00
X00423	XG.2000.1292-4	127-18-4	Tetrachloroethene	ND	mg / Kg	1	0.005	1	11/17/00
X00423	XG.2000.1292-4	108-88-3	Toluene	0.035	mg / Kg	1	0.005	1	11/17/00
X00423	XG.2000.1292-4	79-01-6	Trichloroethene	ND	mg / Kg	1	0.005	1	11/17/00
X00423	XG.2000.1292-4	75-69-4	Trichlorofluoromethane	ND	mg / Kg	1	0.025	1	11/17/00
X00423	XG.2000.1292-4	108-05-4	Vinyl acetate	ND	mg / Kg	1	0.025	1	11/17/00
X00423	XG.2000.1292-4	75-01-4	Vinyl chloride	ND	mg / Kg	1	0.025	1	11/17/00

Certificate of Analysis

t: CH2MHILL
Project: 0011136 KAFB ST-106

0011136-02B **SW846 ME/8015A Diesel Range Organics by GC/FID**

X00441	XG.2000.1280-2		Diesel Range Organics	ND	mg / Kg	1	25		11/16/00

Client Sample ID ***SB-28-110*** Sample Matrix ***SOIL*** Sample Collected ***11/16/00 10:30:00***

QC Group	Run Sequence	CAS #	Analyte	Result	Units	Dilution Factor	Detection Limit	Code	Run Date
0011136-03A		**SW846 5030A/8015A GRO by GC/FID**							
X00443	XG.2000.1279-3		Gasoline Range Organics	ND	mg / Kg	1	0.25		11/16/00
0011136-03A		**SW846 ME/8015A Diesel Range Organics by GC/FID**							
X00441	XG.2000.1280-3		Diesel Range Organics	ND	mg / Kg	1	25		11/16/00
0011136-03B		**SW846 8260A Purgeable VOCs by GC/MS**							
X00423	XG.2000.1292-6	75-34-3	1,1 Dichloroethane	ND	mg / Kg	1	0.005		11/17/00
X00423	XG.2000.1292-6	75-34-3	1,1 Dichloroethene	ND	mg / Kg	1	0.005		11/17/00
X00423	XG.2000.1292-6	71-55-6	1,1,1 Trichloroethane	ND	mg / Kg	1	0.005		11/17/00
X00423	XG.2000.1292-6	630-20-6	1,1,1,2 Tetrachloroethane	ND	mg / Kg	1	0.005		11/17/00
X00423	XG.2000.1292-6	79-00-5	1,1,2 Trichloroethane	ND	mg / Kg	1	0.005		11/17/00
X[illegible]23	XG.2000.1292-6	79-34-5	1,1,2,2 Tetrachloroethane	ND	mg / Kg	1	0.005		11/17/00
[illegible]	XG.2000.1292-6	106-93-4	1,2 Dibromoethane (EDB)	ND	mg / Kg	1	0.005		11/17/00
X00423	XG.2000.1292-6	95-50-1	1,2 Dichlorobenzene	ND	mg / Kg	1	0.005		11/17/00
X00423	XG.2000.1292-6	107-06-2	1,2 Dichloroethane	ND	mg / Kg	1	0.005		11/17/00
X00423	XG.2000.1292-6	78-87-5	1,2 Dichloropropane	ND	mg / Kg	1	0.005		11/17/00
X00423	XG.2000.1292-6	96-18-4	1,2,3 Trichloropropane	ND	mg / Kg	1	0.005		11/17/00
X00423	XG.2000.1292-6	95-63-6	1,2,4-Trimethylbenzene	ND	mg / Kg	1	0.005		11/17/00
X00423	XG.2000.1292-6	541-73-1	1,3 Dichlorobenzene	ND	mg / Kg	1	0.005		11/17/00
X00423	XG.2000.1292-6	108-67-8	1,3,5-Trimethylbenzene	ND	mg / Kg	1	0.005		11/17/00
X00423	XG.2000.1292-6	764-41-0	1,4 Dichloro-2-butene	ND	mg / Kg	1	0.05		11/17/00
X00423	XG.2000.1292-6	106-46-7	1,4 Dichlorobenzene	ND	mg / Kg	1	0.005		11/17/00
X00423	XG.2000.1292-6	78-93-3	2-Butanone (MEK)	ND	mg / Kg	1	0.025		11/17/00
X00423	XG.2000.1292-6	110-75-8	2-Chloroethylvinylether	ND	mg / Kg	1	0.025		11/17/00
X00423	XG.2000.1292-6	591-78-6	2-Hexanone (MBK)	ND	mg / Kg	1	0.025		11/17/00
X00423	XG.2000.1292-6	108-10-1	4-Methyl-2-pentanone (MIBK)	ND	mg / Kg	1	0.025		11/17/00
X00423	XG.2000.1292-6	67-64-1	Acetone	0.17	mg / Kg	1	0.05		11/17/00
X00423	XG.2000.1292-6	107-02-8	Acrolein	ND	mg / Kg	1	0.1		11/17/00
X00423	XG.2000.1292-6	107-13-1	Acrylonitrile	ND	mg / Kg	1	0.1		11/17/00
X00423	XG.2000.1292-6	71-43-2	Benzene	ND	mg / Kg	1	0.005		11/17/00
X00423	XG.2000.1292-6	75-27-4	Bromodichloromethane	ND	mg / Kg	1	0.005		11/17/00
X00423	XG.2000.1292-6	75-25-2	Bromoform	ND	mg / Kg	1	0.005		11/17/00
X00423	XG.2000.1292-6	74-83-9	Bromomethane	ND	mg / Kg	1	0.025		11/17/00
X00423	XG.2000.1292-6	75-15-0	Carbon disulfide	ND	mg / Kg	1	0.025		11/17/00
X00423	XG.2000.1292-6	56-23-5	Carbon tetrachloride	ND	mg / Kg	1	0.005		11/17/00
X00423	XG.2000.1292-6	108-90-7	Chlorobenzene	ND	mg / Kg	1	0.005		11/17/00
X00423	XG.2000.1292-6	124-48-1	Chlorodibromomethane	ND	mg / Kg	1	0.005		11/17/00
[illegible]3	XG.2000.1292-6	75-00-3	Chloroethane	ND	mg / Kg	1	0.025		11/17/00

Certificate of Analysis

Client: CH2MHILL

Project: 0011136 KAFB ST-106

X00423	XG.2000.1292-6	67-66-3	Chloroform	ND	mg / Kg	1	0.005		11/17/00
X00423	XG.2000.1292-6	74-87-3	Chloromethane	ND	mg / Kg	1	0.025		11/17/00
X00423	XG.2000.1292-6	156-59-2	cis-1,2 dichloroethene	ND	mg / Kg	1	0.005		11/17/00
X00423	XG.2000.1292-6	10061-01-5	cis-1,3 dichloropropene	ND	mg / Kg	1	0.005		11/17/00
X00423	XG.2000.1292-6	74-95-3	Dibromomethane	ND	mg / Kg	1	0.005		11/17/00
X00423	XG.2000.1292-6	97-63-2	Ethyl methacrylate	ND	mg / Kg	1	0.025		11/17/00
X00423	XG.2000.1292-6	100-41-4	Ethylbenzene	ND	mg / Kg	1	0.005		11/17/00
X00423	XG.2000.1292-6		Freon 113	ND	mg / Kg	1	0.025		11/17/00
X00423	XG.2000.1292-6	75-71-8	Freon 12	ND	mg / Kg	1	0.05		11/17/00
X00423	XG.2000.1292-6	74-88-4	Iodomethane	ND	mg / Kg	1	0.025		11/17/00
X00423	XG.2000.1292-6	1634-04-4	Methyl t-butyl ether (MTBE)	ND	mg / Kg	1	0.005		11/17/00
X00423	XG.2000.1292-6	75-09-2	Methylene chloride	ND	mg / Kg	1	0.05		11/17/00
X00423	XG.2000.1292-6	91-20-3	Naphthalene	ND	mg / Kg	1	0.025		11/17/00
X00423	XG.2000.1292-6	95-47-6	o-Xylene	ND	mg / Kg	1	0.005		11/17/00
X00423	XG.2000.1292-6	108-38-3/106-42	p/m Xylenes	ND	mg / Kg	1	0.01		11/17/00
X00423	XG.2000.1292-6	100-42-5	Styrene	ND	mg / Kg	1	0.005		11/17/00
X00423	XG.2000.1292-6	156-60-5	t-1,2 Dichloroethene	ND	mg / Kg	1	0.005		11/17/00
X00423	XG.2000.1292-6	10061-02-6	t-1,3 Dichloropropene	ND	mg / Kg	1	0.005		11/17/00
X00423	XG.2000.1292-6	127-18-4	Tetrachloroethene	ND	mg / Kg	1	0.005		11/17/00
X00423	XG.2000.1292-6	108-88-3	Toluene	ND	mg / Kg	1	0.005		11/17/00
X00423	XG.2000.1292-6	79-01-6	Trichloroethene	ND	mg / Kg	1	0.005		11/17/00
X00423	XG.2000.1292-6	75-69-4	Trichlorofluoromethane	ND	mg / Kg	1	0.025		11/17/00
X00423	XG.2000.1292-6	108-05-4	Vinyl acetate	ND	mg / Kg	1	0.025		11/17
X00423	XG.2000.1292-6	75-01-4	Vinyl chloride	ND	mg / Kg	1	0.025		11/17/

Client Sample ID ***TRIP BLANK*** Sample Matrix ***H2O*** Sample Collected ***11/16/00 12:15:00***

QC Group	Run Sequence	CAS #	Analyte	Result	Units	Dilution Factor	Detection Limit	Code	Run Date
0011136-04A		**SW846 8260A Purgeable VOCs by GC/MS**							
X00436	XG.2000.1298-2	75-34-3	1,1 Dichloroethane	ND	ug / L	1	1		11/17/00
X00436	XG.2000.1298-2	75-34-3	1,1 Dichloroethene	ND	ug / L	1	1		11/17/00
X00436	XG.2000.1298-2	71-55-6	1,1,1 Trichloroethane	ND	ug / L	1	1		11/17/00
X00436	XG.2000.1298-2	630-20-6	1,1,1,2 Tetrachloroethane	ND	ug / L	1	1		11/17/00
X00436	XG.2000.1298-2	79-00-5	1,1,2 Trichloroethane	ND	ug / L	1	1		11/17/00
X00436	XG.2000.1298-2	79-34-5	1,1,2,2 Tetrachloroethane	ND	ug / L	1	1		11/17/00
X00436	XG.2000.1298-2	106-93-4	1,2 Dibromoethane (EDB)	ND	ug / L	1	1		11/17/00
X00436	XG.2000.1298-2	95-50-1	1,2 Dichlorobenzene	ND	ug / L	1	1		11/17/00
X00436	XG.2000.1298-2	107-06-2	1,2 Dichloroethane	ND	ug / L	1	1		11/17/00
X00436	XG.2000.1298-2	78-87-5	1,2 Dichloropropane	ND	ug / L	1	1		11/17/00
X00436	XG.2000.1298-2	96-18-4	1,2,3 Trichloropropane	ND	ug / L	1	1		11/17/00
X00436	XG.2000.1298-2	95-63-6	1,2,4-Trimethylbenzene	ND	ug / L	1	1		11/17/00
X00436	XG.2000.1298-2	541-73-1	1,3 Dichlorobenzene	ND	ug / L	1	1		11/17/00
X00436	XG.2000.1298-2	108-67-8	1,3,5-Trimethylbenzene	ND	ug / L	1	1		11/17/00
X00436	XG.2000.1298-2	764-41-0	1,4 Dichloro-2-butene	ND	ug / L	1	10		11/17/00
X00436	XG.2000.1298-2	106-46-7	1,4 Dichlorobenzene	ND	ug / L	1	1		11/17/

Certificate of Analysis

nt: CH2MHILL

Project: 0011136 KAFB ST-106

X00436	XG.2000.1298-2	78-93-3	2-Butanone (MEK)	ND	ug / L	1	5		11/17/00
X00436	XG.2000.1298-2	110-75-8	2-Chloroethylvinylether	ND	ug / L	1	5		11/17/00
X00436	XG.2000.1298-2	591-78-6	2-Hexanone (MBK)	ND	ug / L	1	5		11/17/00
X00436	XG.2000.1298-2	108-10-1	4-Methyl-2-pentanone (MIBK)	ND	ug / L	1	5		11/17/00
X00436	XG.2000.1298-2	67-64-1	Acetone	ND	ug / L	1	10		11/17/00
X00436	XG.2000.1298-2	107-02-8	Acrolein	ND	ug / L	1	20		11/17/00
X00436	XG.2000.1298-2	107-13-1	Acrylonitrile	ND	ug / L	1	20		11/17/00
X00436	XG.2000.1298-2	71-43-2	Benzene	ND	ug / L	1	1		11/17/00
X00436	XG.2000.1298-2	75-27-4	Bromodichloromethane	ND	ug / L	1	1		11/17/00
X00436	XG.2000.1298-2	75-25-2	Bromoform	ND	ug / L	1	1		11/17/00
X00436	XG.2000.1298-2	74-83-9	Bromomethane	ND	ug / L	1	5		11/17/00
X00436	XG.2000.1298-2	75-15-0	Carbon disulfide	ND	ug / L	1	5		11/17/00
X00436	XG.2000.1298-2	56-23-5	Carbon tetrachloride	ND	ug / L	1	1		11/17/00
X00436	XG.2000.1298-2	108-90-7	Chlorobenzene	ND	ug / L	1	1		11/17/00
X00436	XG.2000.1298-2	124-48-1	Chlorodibromomethane	ND	ug / L	1	1		11/17/00
X00436	XG.2000.1298-2	75-00-3	Chloroethane	ND	ug / L	1	5		11/17/00
X00436	XG.2000.1298-2	67-66-3	Chloroform	ND	ug / L	1	1		11/17/00
X00436	XG.2000.1298-2	74-87-3	Chloromethane	ND	ug / L	1	5		11/17/00
X00436	XG.2000.1298-2	156-59-2	cis-1,2 dichloroethene	ND	ug / L	1	1		11/17/00
X00436	XG.2000.1298-2	10061-01-5	cis-1,3 dichloropropene	ND	ug / L	1	1		11/17/00
X00436	XG.2000.1298-2	74-95-3	Dibromomethane	ND	ug / L	1	1		11/17/00
X00436	XG.2000.1298-2	97-63-2	Ethyl methacrylate	ND	ug / L	1	5		11/17/00
36	XG.2000.1298-2	100-41-4	Ethylbenzene	ND	ug / L	1	1		11/17/00
X00436	XG.2000.1298-2		Freon 113	ND	ug / L	1	5		11/17/00
X00436	XG.2000.1298-2	75-71-8	Freon 12	ND	ug / L	1	10		11/17/00
X00436	XG.2000.1298-2	74-88-4	Iodomethane	ND	ug / L	1	5		11/17/00
X00436	XG.2000.1298-2	1634-04-4	Methyl t-butyl ether (MTBE)	ND	ug / L	1	1		11/17/00
X00436	XG.2000.1298-2	75-09-2	Methylene chloride	ND	ug / L	1	10		11/17/00
X00436	XG.2000.1298-2	91-20-3	Naphthalene	ND	ug / L	1	5		11/17/00
X00436	XG.2000.1298-2	95-47-6	o-Xylene	ND	ug / L	1	1		11/17/00
X00436	XG.2000.1298-2	108-38-3/106-42	p/m Xylenes	ND	ug / L	1	2		11/17/00
X00436	XG.2000.1298-2	100-42-5	Styrene	ND	ug / L	1	1		11/17/00
X00436	XG.2000.1298-2	156-60-5	t-1,2 Dichloroethene	ND	ug / L	1	1		11/17/00
X00436	XG.2000.1298-2	10061-02-6	t-1,3 Dichloropropene	ND	ug / L	1	1		11/17/00
X00436	XG.2000.1298-2	127-18-4	Tetrachloroethene	ND	ug / L	1	1		11/17/00
X00436	XG.2000.1298-2	108-88-3	Toluene	ND	ug / L	1	1		11/17/00
X00436	XG.2000.1298-2	79-01-6	Trichloroethene	ND	ug / L	1	1		11/17/00
X00436	XG.2000.1298-2	75-69-4	Trichlorofluoromethane	ND	ug / L	1	5		11/17/00
X00436	XG.2000.1298-2	108-05-4	Vinyl acetate	ND	ug / L	1	5		11/17/00
X00436	XG.2000.1298-2	75-01-4	Vinyl chloride	ND	ug / L	1	5		11/17/00

**** Sample specific Detection Limit is determined by multiplying the sample Dilution Factor by the listed Reporting Detection Limit. ****

**** ND = Not detected: less than the sample specific Detection Limit. Results relate only to the items tested. ****

footnote [1] Sample was received with headspace.

Assaigai Analytical Laboratories, Inc.

Quality Control Summary

Client: CH2MHILL

Project: 0011136 160660.02.FF.SA

Explanation of codes

D *Not applicable due to sample dilution*

L *Not applicable due to MDL proximity*

QC Type **LCS: Lab Control Spike** QC Matrix **SOLID**

QC Group	Run Sequence	CAS #	Analyte	Result	Units	Dilution Factor	Detection Limit	Code	Run Date
X00423-007		**SW846 8260A Purgeable VOCs by GC/MS**							
X00423	XG.2000.1232-6	75-34-3	1,1 Dichloroethene	108	% Recovery	1	NA		10/31/00
X00423	XG.2000.1233-2	75-34-3	1,1 Dichloroethene	108	% Recovery	1	NA		10/31/00
X00423	XG.2000.1232-6	106-46-7	1,4 Dichlorobenzene	103	% Recovery	1	NA		10/31/00
X00423	XG.2000.1233-2	106-46-7	1,4 Dichlorobenzene	103	% Recovery	1	NA		10/31/00
X00423	XG.2000.1232-6	71-43-2	Benzene	113	% Recovery	1	NA		10/31/00
X00423	XG.2000.1233-2	71-43-2	Benzene	113	% Recovery	1	NA		10/31/00
X00423	XG.2000.1232-6	108-90-7	Chlorobenzene	110	% Recovery	1	NA		10/31/00
X00423	XG.2000.1233-2	108-90-7	Chlorobenzene	110	% Recovery	1	NA		10/31/00
X00423	XG.2000.1232-6	108-88-3	Toluene	111	% Recovery	1	NA		10/31/00
X00423	XG.2000.1233-2	108-88-3	Toluene	111	% Recovery	1	NA		10/31/00
X00423	XG.2000.1232-6	79-01-6	Trichloroethene	113	% Recovery	1	NA		10/31/00
X00423	XG.2000.1233-2	79-01-6	Trichloroethene	113	% Recovery	1	NA		10/31/00
X00441-002		**SW846 ME/8015A Diesel Range Organics by GC/FID**							
X00441	XG.2000.1276-2		Diesel Range Organics	85	% Recovery	1	NA		11/16/00
X00443-002		**SW846 5030A/8015A GRO by GC/FID**							
3	XG.2000.1275-2		Gasoline Range Organics	96	% Recovery	1	NA		11/16/00

QC Type **LCSD: Lab Control Spike Duplicate Accuracy** QC Matrix **SOLID**

QC Group	Run Sequence	CAS #	Analyte	Result	Units	Dilution Factor	Detection Limit	Code	Run Date
X00423-008		**SW846 8260A Purgeable VOCs by GC/MS**							
X00423	XG.2000.1232-7	75-34-3	1,1 Dichloroethene	106	% Recovery	1	NA		10/31/00
X00423	XG.2000.1233-3	75-34-3	1,1 Dichloroethene	106	% Recovery	1	NA		10/31/00
X00423	XG.2000.1232-7	106-46-7	1,4 Dichlorobenzene	101	% Recovery	1	NA		10/31/00
X00423	XG.2000.1233-3	106-46-7	1,4 Dichlorobenzene	101	% Recovery	1	NA		10/31/00
X00423	XG.2000.1232-7	71-43-2	Benzene	110	% Recovery	1	NA		10/31/00
X00423	XG.2000.1233-3	71-43-2	Benzene	110	% Recovery	1	NA		10/31/00
X00423	XG.2000.1232-7	108-90-7	Chlorobenzene	107	% Recovery	1	NA		10/31/00
X00423	XG.2000.1233-3	108-90-7	Chlorobenzene	107	% Recovery	1	NA		10/31/00
X00423	XG.2000.1232-7	108-88-3	Toluene	108	% Recovery	1	NA		10/31/00
X00423	XG.2000.1233-3	108-88-3	Toluene	108	% Recovery	1	NA		10/31/00
X00423	XG.2000.1232-7	79-01-6	Trichloroethene	109	% Recovery	1	NA		10/31/00
X00423	XG.2000.1233-3	79-01-6	Trichloroethene	109	% Recovery	1	NA		10/31/00
X00441-003		**SW846 ME/8015A Diesel Range Organics by GC/FID**							
X00441	XG.2000.1276-3		Diesel Range Organics	84	% Recovery	1	NA		11/16/00
X00443-003		**SW846 5030A/8015A GRO by GC/FID**							
X00443	XG.2000.1275-3		Gasoline Range Organics	96	% Recovery	1	NA		11/16/00

Quality Control Summary

Client: CH2MHILL

Project: 0011136 160660.02.FF.SA

Explanation of codes

D *Not applicable due to sample diluti*

L *Not applicable due to MDL proxim*

QC Type **LCSD: Lab Control Spike Duplicate Precision** QC Matrix **SOLID**

QC Group	Run Sequence	CAS #	Analyte	Result	Units	Dilution Factor	Detection Limit	Code	Run Date
X00423-008		SW846 8260A Purgeable VOCs by GC/MS							
X00423	XG.2000.1232-7	75-34-3	1,1 Dichloroethene	2	RPD	1	NA		10/31/0C
X00423	XG.2000.1233-3	75-34-3	1,1 Dichloroethene	2	RPD	1	NA		10/31/0C
X00423	XG.2000.1232-7	106-46-7	1,4 Dichlorobenzene	2	RPD	1	NA		10/31/0C
X00423	XG.2000.1233-3	106-46-7	1,4 Dichlorobenzene	2	RPD	1	NA		10/31/0C
X00423	XG.2000.1232-7	71-43-2	Benzene	3	RPD	1	NA		10/31/0C
X00423	XG.2000.1233-3	71-43-2	Benzene	3	RPD	1	NA		10/31/0C
X00423	XG.2000.1232-7	108-90-7	Chlorobenzene	2	RPD	1	NA		10/31/00
X00423	XG.2000.1233-3	108-90-7	Chlorobenzene	2	RPD	1	NA		10/31/00
X00423	XG.2000.1232-7	108-88-3	Toluene	2	RPD	1	NA		10/31/00
X00423	XG.2000.1233-3	108-88-3	Toluene	2	RPD	1	NA		10/31/00
X00423	XG.2000.1232-7	79-01-6	Trichloroethene	3	RPD	1	NA		10/31/00
X00423	XG.2000.1233-3	79-01-6	Trichloroethene	3	RPD	1	NA		10/31/00
X00441-003		SW846 ME/8015A Diesel Range Organics by GC/FID							
X00441	XG.2000.1276-3		Diesel Range Organics	< 1	RPD	1	NA		11/16/00
X00443-003		SW846 5030A/8015A GRO by GC/FID							
X00443	XG.2000.1275-3		Gasoline Range Organics	< 1	RPD	1	NA		11/16/

QC Type **MB: Method Blank** QC Matrix **SOLID**

QC Group	Run Sequence	CAS #	Analyte	Result	Units	Dilution Factor	Detection Limit	Code	Run Date
X00423-001		SW846 8260A Purgeable VOCs by GC/MS							
X00423	XG.2000.1232-1	75-34-3	1,1 Dichloroethane	ND	mg / Kg	1	0.005		10/31/00
X00423	XG.2000.1233-1	75-34-3	1,1 Dichloroethane	ND	mg / Kg	1	0.005		10/31/00
X00423	XG.2000.1232-1	75-34-3	1,1 Dichloroethene	ND	mg / Kg	1	0.005		10/31/00
X00423	XG.2000.1233-1	75-34-3	1,1 Dichloroethene	ND	mg / Kg	1	0.005		10/31/00
X00423	XG.2000.1232-1	71-55-6	1,1,1 Trichloroethane	ND	mg / Kg	1	0.005		10/31/00
X00423	XG.2000.1233-1	71-55-6	1,1,1 Trichloroethane	ND	mg / Kg	1	0.005		10/31/00
X00423	XG.2000.1232-1	630-20-6	1,1,1,2 Tetrachloroethane	ND	mg / Kg	1	0.005		10/31/00
X00423	XG.2000.1233-1	630-20-6	1,1,1,2 Tetrachloroethane	ND	mg / Kg	1	0.005		10/31/00
X00423	XG.2000.1232-1	79-00-5	1,1,2 Trichloroethane	ND	mg / Kg	1	0.005		10/31/00
X00423	XG.2000.1233-1	79-00-5	1,1,2 Trichloroethane	ND	mg / Kg	1	0.005		10/31/00
X00423	XG.2000.1232-1	79-34-5	1,1,2,2 Tetrachloroethane	ND	mg / Kg	1	0.005		10/31/00
X00423	XG.2000.1233-1	79-34-5	1,1,2,2 Tetrachloroethane	ND	mg / Kg	1	0.005		10/31/00
X00423	XG.2000.1232-1	106-93-4	1,2 Dibromoethane (EDB)	ND	mg / Kg	1	0.005		10/31/00
X00423	XG.2000.1233-1	106-93-4	1,2 Dibromoethane (EDB)	ND	mg / Kg	1	0.005		10/31/00
X00423	XG.2000.1232-1	95-50-1	1,2 Dichlorobenzene	ND	mg / Kg	1	0.005		10/31/00
X00423	XG.2000.1233-1	95-50-1	1,2 Dichlorobenzene	ND	mg / Kg	1	0.005		10/31/00
X00423	XG.2000.1232-1	107-06-2	1,2 Dichloroethane	ND	mg / Kg	1	0.005		10/31/00
X00423	XG.2000.1233-1	107-06-2	1,2 Dichloroethane	ND	mg / Kg	1	0.005		10/31/
X00423	XG.2000.1232-1	78-87-5	1,2 Dichloropropane	ND	mg / Kg	1	0.005		10/31/

Quality Control Summary

Explanation of codes

D *Not applicable due to sample dilution*
L *Not applicable due to MDL proximity*

nt: **CH2MHILL**
Project: **0011136** **160660.02.FF.SA**

X00423	XG.2000.1233-1	78-87-5	1,2 Dichloropropane	ND	mg / Kg	1	0.005	10/31/00
X00423	XG.2000.1232-1	96-18-4	1,2,3 Trichloropropane	ND	mg / Kg	1	0.005	10/31/00
X00423	XG.2000.1233-1	96-18-4	1,2,3 Trichloropropane	ND	mg / Kg	1	0.005	10/31/00
X00423	XG.2000.1232-1	95-63-6	1,2,4-Trimethylbenzene	ND	mg / Kg	1	0.005	10/31/00
X00423	XG.2000.1233-1	95-63-6	1,2,4-Trimethylbenzene	ND	mg / Kg	1	0.005	10/31/00
X00423	XG.2000.1232-1	541-73-1	1,3 Dichlorobenzene	ND	mg / Kg	1	0.005	10/31/00
X00423	XG.2000.1233-1	541-73-1	1,3 Dichlorobenzene	ND	mg / Kg	1	0.005	10/31/00
X00423	XG.2000.1232-1	108-67-8	1,3,5-Trimethylbenzene	ND	mg / Kg	1	0.005	10/31/00
X00423	XG.2000.1233-1	108-67-8	1,3,5-Trimethylbenzene	ND	mg / Kg	1	0.005	10/31/00
X00423	XG.2000.1232-1	764-41-0	1,4 Dichloro-2-butene	ND	mg / Kg	1	0.05	10/31/00
X00423	XG.2000.1233-1	764-41-0	1,4 Dichloro-2-butene	ND	mg / Kg	1	0.05	10/31/00
X00423	XG.2000.1232-1	106-46-7	1,4 Dichlorobenzene	ND	mg / Kg	1	0.005	10/31/00
X00423	XG.2000.1233-1	106-46-7	1,4 Dichlorobenzene	ND	mg / Kg	1	0.005	10/31/00
X00423	XG.2000.1232-1	78-93-3	2-Butanone (MEK)	ND	mg / Kg	1	0.025	10/31/00
X00423	XG.2000.1233-1	78-93-3	2-Butanone (MEK)	ND	mg / Kg	1	0.025	10/31/00
X00423	XG.2000.1232-1	110-75-8	2-Chloroethylvinylether	ND	mg / Kg	1	0.025	10/31/00
X00423	XG.2000.1233-1	110-75-8	2-Chloroethylvinylether	ND	mg / Kg	1	0.025	10/31/00
X00423	XG.2000.1232-1	591-78-6	2-Hexanone (MBK)	ND	mg / Kg	1	0.025	10/31/00
X00423	XG.2000.1233-1	591-78-6	2-Hexanone (MBK)	ND	mg / Kg	1	0.025	10/31/00
X00423	XG.2000.1232-1	108-10-1	4-Methyl-2-pentanone (MIBK)	ND	mg / Kg	1	0.025	10/31/00
X00423	XG.2000.1233-1	108-10-1	4-Methyl-2-pentanone (MIBK)	ND	mg / Kg	1	0.025	10/31/00
X00423	XG.2000.1232-1	67-64-1	Acetone	ND	mg / Kg	1	0.05	10/31/00
X00423	XG.2000.1233-1	67-64-1	Acetone	ND	mg / Kg	1	0.05	10/31/00
3	XG.2000.1232-1	107-02-8	Acrolein	ND	mg / Kg	1	0.1	10/31/00
X00423	XG.2000.1233-1	107-02-8	Acrolein	ND	mg / Kg	1	0.1	10/31/00
X00423	XG.2000.1232-1	107-13-1	Acrylonitrile	ND	mg / Kg	1	0.1	10/31/00
X00423	XG.2000.1233-1	107-13-1	Acrylonitrile	ND	mg / Kg	1	0.1	10/31/00
X00423	XG.2000.1232-1	71-43-2	Benzene	ND	mg / Kg	1	0.005	10/31/00
X00423	XG.2000.1233-1	71-43-2	Benzene	ND	mg / Kg	1	0.005	10/31/00
X00423	XG.2000.1232-1	75-27-4	Bromodichloromethane	ND	mg / Kg	1	0.005	10/31/00
X00423	XG.2000.1233-1	75-27-4	Bromodichloromethane	ND	mg / Kg	1	0.005	10/31/00
X00423	XG.2000.1232-1	75-25-2	Bromoform	ND	mg / Kg	1	0.005	10/31/00
X00423	XG.2000.1233-1	75-25-2	Bromoform	ND	mg / Kg	1	0.005	10/31/00
X00423	XG.2000.1232-1	74-83-9	Bromomethane	ND	mg / Kg	1	0.025	10/31/00
X00423	XG.2000.1233-1	74-83-9	Bromomethane	ND	mg / Kg	1	0.025	10/31/00
X00423	XG.2000.1232-1	75-15-0	Carbon disulfide	ND	mg / Kg	1	0.025	10/31/00
X00423	XG.2000.1233-1	75-15-0	Carbon disulfide	ND	mg / Kg	1	0.025	10/31/00
X00423	XG.2000.1232-1	56-23-5	Carbon tetrachloride	ND	mg / Kg	1	0.005	10/31/00
X00423	XG.2000.1233-1	56-23-5	Carbon tetrachloride	ND	mg / Kg	1	0.005	10/31/00
X00423	XG.2000.1232-1	108-90-7	Chlorobenzene	ND	mg / Kg	1	0.005	10/31/00
X00423	XG.2000.1233-1	108-90-7	Chlorobenzene	ND	mg / Kg	1	0.005	10/31/00
X00423	XG.2000.1232-1	124-48-1	Chlorodibromomethane	ND	mg / Kg	1	0.005	10/31/00
X00423	XG.2000.1233-1	124-48-1	Chlorodibromomethane	ND	mg / Kg	1	0.005	10/31/00
X00423	XG.2000.1232-1	75-00-3	Chloroethane	ND	mg / Kg	1	0.025	10/31/00
X00423	XG.2000.1233-1	75-00-3	Chloroethane	ND	mg / Kg	1	0.025	10/31/00
X00423	XG.2000.1232-1	67-66-3	Chloroform	ND	mg / Kg	1	0.005	10/31/00
X00423	XG.2000.1233-1	67-66-3	Chloroform	ND	mg / Kg	1	0.005	10/31/00
X00423	XG.2000.1232-1	74-87-3	Chloromethane	ND	mg / Kg	1	0.025	10/31/00
[illegible]23	XG.2000.1233-1	74-87-3	Chloromethane	ND	mg / Kg	1	0.025	10/31/00
[illegible]3	XG.2000.1232-1	156-59-2	cis-1,2 dichloroethene	ND	mg / Kg	1	0.005	10/31/00
X00423	XG.2000.1233-1	156-59-2	cis-1,2 dichloroethene	ND	mg / Kg	1	0.005	10/31/00

Quality Control Summary

Client: **CH2MHILL**

Project: **0011136** **160660.02.FF.SA**

Explanation of codes

D *Not applicable due to sample dilut*

L *Not applicable due to MDL proxin*

X00423	XG.2000.1232-1	10061-01-5	cis-1,3 dichloropropene	ND	mg / Kg	1	0.005	10/31/00
X00423	XG.2000.1233-1	10061-01-5	cis-1,3 dichloropropene	ND	mg / Kg	1	0.005	10/31/00
X00423	XG.2000.1232-1	74-95-3	Dibromomethane	ND	mg / Kg	1	0.005	10/31/00
X00423	XG.2000.1233-1	74-95-3	Dibromomethane	ND	mg / Kg	1	0.005	10/31/00
X00423	XG.2000.1232-1	97-63-2	Ethyl methacrylate	ND	mg / Kg	1	0.025	10/31/00
X00423	XG.2000.1233-1	97-63-2	Ethyl methacrylate	ND	mg / Kg	1	0.025	10/31/00
X00423	XG.2000.1232-1	100-41-4	Ethylbenzene	ND	mg / Kg	1	0.005	10/31/00
X00423	XG.2000.1233-1	100-41-4	Ethylbenzene	ND	mg / Kg	1	0.005	10/31/00
X00423	XG.2000.1232-1		Freon 113	ND	mg / Kg	1	0.025	10/31/00
X00423	XG.2000.1233-1		Freon 113	ND	mg / Kg	1	0.025	10/31/00
X00423	XG.2000.1232-1	75-71-8	Freon 12	ND	mg / Kg	1	0.05	10/31/00
X00423	XG.2000.1233-1	75-71-8	Freon 12	ND	mg / Kg	1	0.05	10/31/00
X00423	XG.2000.1232-1	74-88-4	Iodomethane	ND	mg / Kg	1	0.025	10/31/00
X00423	XG.2000.1233-1	74-88-4	Iodomethane	ND	mg / Kg	1	0.025	10/31/00
X00423	XG.2000.1232-1	1634-04-4	Methyl t-butyl ether (MTBE)	ND	mg / Kg	1	0.005	10/31/00
X00423	XG.2000.1233-1	1634-04-4	Methyl t-butyl ether (MTBE)	ND	mg / Kg	1	0.005	10/31/00
X00423	XG.2000.1232-1	75-09-2	Methylene chloride	ND	mg / Kg	1	0.05	10/31/00
X00423	XG.2000.1233-1	75-09-2	Methylene chloride	ND	mg / Kg	1	0.05	10/31/00
X00423	XG.2000.1232-1	91-20-3	Naphthalene	ND	mg / Kg	1	0.025	10/31/00
X00423	XG.2000.1233-1	91-20-3	Naphthalene	ND	mg / Kg	1	0.025	10/31/00
X00423	XG.2000.1232-1	95-47-6	o-Xylene	ND	mg / Kg	1	0.005	10/31/00
X00423	XG.2000.1233-1	95-47-6	o-Xylene	ND	mg / Kg	1	0.005	10/31/00
X00423	XG.2000.1232-1	108-38-3/106-42	p/m Xylenes	ND	mg / Kg	1	0.01	10/31/00
X00423	XG.2000.1233-1	108-38-3/106-42	p/m Xylenes	ND	mg / Kg	1	0.01	10/3
X00423	XG.2000.1232-1	100-42-5	Styrene	ND	mg / Kg	1	0.005	10/31/00
X00423	XG.2000.1233-1	100-42-5	Styrene	ND	mg / Kg	1	0.005	10/31/00
X00423	XG.2000.1232-1	156-60-5	t-1,2 Dichloroethene	ND	mg / Kg	1	0.005	10/31/00
X00423	XG.2000.1233-1	156-60-5	t-1,2 Dichloroethene	ND	mg / Kg	1	0.005	10/31/00
X00423	XG.2000.1232-1	10061-02-6	t-1,3 Dichloropropene	ND	mg / Kg	1	0.005	10/31/00
X00423	XG.2000.1233-1	10061-02-6	t-1,3 Dichloropropene	ND	mg / Kg	1	0.005	10/31/00
X00423	XG.2000.1232-1	127-18-4	Tetrachloroethene	ND	mg / Kg	1	0.005	10/31/00
X00423	XG.2000.1233-1	127-18-4	Tetrachloroethene	ND	mg / Kg	1	0.005	10/31/00
X00423	XG.2000.1232-1	108-88-3	Toluene	ND	mg / Kg	1	0.005	10/31/00
X00423	XG.2000.1233-1	108-88-3	Toluene	ND	mg / Kg	1	0.005	10/31/00
X00423	XG.2000.1232-1	79-01-6	Trichloroethene	ND	mg / Kg	1	0.005	10/31/00
X00423	XG.2000.1233-1	79-01-6	Trichloroethene	ND	mg / Kg	1	0.005	10/31/00
X00423	XG.2000.1232-1	75-69-4	Trichlorofluoromethane	ND	mg / Kg	1	0.025	10/31/00
X00423	XG.2000.1233-1	75-69-4	Trichlorofluoromethane	ND	mg / Kg	1	0.025	10/31/00
X00423	XG.2000.1232-1	108-05-4	Vinyl acetate	ND	mg / Kg	1	0.025	10/31/00
X00423	XG.2000.1233-1	108-05-4	Vinyl acetate	ND	mg / Kg	1	0.025	10/31/00
X00423	XG.2000.1232-1	75-01-4	Vinyl chloride	ND	mg / Kg	1	0.025	10/31/00
X00423	XG.2000.1233-1	75-01-4	Vinyl chloride	ND	mg / Kg	1	0.025	10/31/00
X00423-009		**SW846 8260A Purgeable VOCs by GC/MS**						
X00423	XG.2000.1232-8	75-34-3	1,1 Dichloroethane	ND	mg / Kg	1	0.005	11/02/00
X00423	XG.2000.1233-4	75-34-3	1,1 Dichloroethane	ND	mg / Kg	1	0.005	11/02/00
X00423	XG.2000.1232-8	75-34-3	1,1 Dichloroethene	ND	mg / Kg	1	0.005	11/02/00
X00423	XG.2000.1233-4	75-34-3	1,1 Dichloroethene	ND	mg / Kg	1	0.005	11/02/00
X00423	XG.2000.1232-8	71-55-6	1,1,1 Trichloroethane	ND	mg / Kg	1	0.005	11/02/
X00423	XG.2000.1233-4	71-55-6	1,1,1 Trichloroethane	ND	mg / Kg	1	0.005	11/0

Quality Control Summary

Explanation of codes

D *Not applicable due to sample dilution*
L *Not applicable due to MDL proximity*

Client: **CH2MHILL**
Project: **0011136** **160660.02.FF.SA**

X00423	XG.2000.1232-8	630-20-6	1,1,1,2 Tetrachloroethane	ND	mg / Kg	1	0.005	11/02/00
X00423	XG.2000.1233-4	630-20-6	1,1,1,2 Tetrachloroethane	ND	mg / Kg	1	0.005	11/02/00
X00423	XG.2000.1232-8	79-00-5	1,1,2 Trichloroethane	ND	mg / Kg	1	0.005	11/02/00
X00423	XG.2000.1233-4	79-00-5	1,1,2 Trichloroethane	ND	mg / Kg	1	0.005	11/02/00
X00423	XG.2000.1232-8	79-34-5	1,1,2,2 Tetrachloroethane	ND	mg / Kg	1	0.005	11/02/00
X00423	XG.2000.1233-4	79-34-5	1,1,2,2 Tetrachloroethane	ND	mg / Kg	1	0.005	11/02/00
X00423	XG.2000.1232-8	106-93-4	1,2 Dibromoethane (EDB)	ND	mg / Kg	1	0.005	11/02/00
X00423	XG.2000.1233-4	106-93-4	1,2 Dibromoethane (EDB)	ND	mg / Kg	1	0.005	11/02/00
X00423	XG.2000.1232-8	95-50-1	1,2 Dichlorobenzene	ND	mg / Kg	1	0.005	11/02/00
X00423	XG.2000.1233-4	95-50-1	1,2 Dichlorobenzene	ND	mg / Kg	1	0.005	11/02/00
X00423	XG.2000.1232-8	107-06-2	1,2 Dichloroethane	ND	mg / Kg	1	0.005	11/02/00
X00423	XG.2000.1233-4	107-06-2	1,2 Dichloroethane	ND	mg / Kg	1	0.005	11/02/00
X00423	XG.2000.1232-8	78-87-5	1,2 Dichloropropane	ND	mg / Kg	1	0.005	11/02/00
X00423	XG.2000.1233-4	78-87-5	1,2 Dichloropropane	ND	mg / Kg	1	0.005	11/02/00
X00423	XG.2000.1232-8	96-18-4	1,2,3 Trichloropropane	ND	mg / Kg	1	0.005	11/02/00
X00423	XG.2000.1233-4	96-18-4	1,2,3 Trichloropropane	ND	mg / Kg	1	0.005	11/02/00
X00423	XG.2000.1232-8	95-63-6	1,2,4-Trimethylbenzene	ND	mg / Kg	1	0.005	11/02/00
X00423	XG.2000.1233-4	95-63-6	1,2,4-Trimethylbenzene	ND	mg / Kg	1	0.005	11/02/00
X00423	XG.2000.1232-8	541-73-1	1,3 Dichlorobenzene	ND	mg / Kg	1	0.005	11/02/00
X00423	XG.2000.1233-4	541-73-1	1,3 Dichlorobenzene	ND	mg / Kg	1	0.005	11/02/00
X00423	XG.2000.1232-8	108-67-8	1,3,5-Trimethylbenzene	ND	mg / Kg	1	0.005	11/02/00
X00423	XG.2000.1233-4	108-67-8	1,3,5-Trimethylbenzene	ND	mg / Kg	1	0.005	11/02/00
X00423	XG.2000.1232-8	764-41-0	1,4 Dichloro-2-butene	ND	mg / Kg	1	0.05	11/02/00
[illegible]3	XG.2000.1233-4	764-41-0	1,4 Dichloro-2-butene	ND	mg / Kg	1	0.05	11/02/00
X[illegible]23	XG.2000.1232-8	106-46-7	1,4 Dichlorobenzene	ND	mg / Kg	1	0.005	11/02/00
X00423	XG.2000.1233-4	106-46-7	1,4 Dichlorobenzene	ND	mg / Kg	1	0.005	11/02/00
X00423	XG.2000.1232-8	78-93-3	2-Butanone (MEK)	ND	mg / Kg	1	0.025	11/02/00
X00423	XG.2000.1233-4	78-93-3	2-Butanone (MEK)	ND	mg / Kg	1	0.025	11/02/00
X00423	XG.2000.1232-8	110-75-8	2-Chloroethylvinylether	ND	mg / Kg	1	0.025	11/02/00
X00423	XG.2000.1233-4	110-75-8	2-Chloroethylvinylether	ND	mg / Kg	1	0.025	11/02/00
X00423	XG.2000.1232-8	591-78-6	2-Hexanone (MBK)	ND	mg / Kg	1	0.025	11/02/00
X00423	XG.2000.1233-4	591-78-6	2-Hexanone (MBK)	ND	mg / Kg	1	0.025	11/02/00
X00423	XG.2000.1232-8	108-10-1	4-Methyl-2-pentanone (MIBK)	ND	mg / Kg	1	0.025	11/02/00
X00423	XG.2000.1233-4	108-10-1	4-Methyl-2-pentanone (MIBK)	ND	mg / Kg	1	0.025	11/02/00
X00423	XG.2000.1232-8	67-64-1	Acetone	ND	mg / Kg	1	0.05	11/02/00
X00423	XG.2000.1233-4	67-64-1	Acetone	ND	mg / Kg	1	0.05	11/02/00
X00423	XG.2000.1232-8	107-02-8	Acrolein	ND	mg / Kg	1	0.1	11/02/00
X00423	XG.2000.1233-4	107-02-8	Acrolein	ND	mg / Kg	1	0.1	11/02/00
X00423	XG.2000.1232-8	107-13-1	Acrylonitrile	ND	mg / Kg	1	0.1	11/02/00
X00423	XG.2000.1233-4	107-13-1	Acrylonitrile	ND	mg / Kg	1	0.1	11/02/00
X00423	XG.2000.1232-8	71-43-2	Benzene	ND	mg / Kg	1	0.005	11/02/00
X00423	XG.2000.1233-4	71-43-2	Benzene	ND	mg / Kg	1	0.005	11/02/00
X00423	XG.2000.1232-8	75-27-4	Bromodichloromethane	ND	mg / Kg	1	0.005	11/02/00
X00423	XG.2000.1233-4	75-27-4	Bromodichloromethane	ND	mg / Kg	1	0.005	11/02/00
X00423	XG.2000.1232-8	75-25-2	Bromoform	ND	mg / Kg	1	0.005	11/02/00
X00423	XG.2000.1233-4	75-25-2	Bromoform	ND	mg / Kg	1	0.005	11/02/00
X00423	XG.2000.1232-8	74-83-9	Bromomethane	ND	mg / Kg	1	0.025	11/02/00
X00423	XG.2000.1233-4	74-83-9	Bromomethane	ND	mg / Kg	1	0.025	11/02/00
X[illegible]423	XG.2000.1232-8	75-15-0	Carbon disulfide	ND	mg / Kg	1	0.025	11/02/00
[illegible]3	XG.2000.1233-4	75-15-0	Carbon disulfide	ND	mg / Kg	1	0.025	11/02/00
X00423	XG.2000.1232-8	56-23-5	Carbon tetrachloride	ND	mg / Kg	1	0.005	11/02/00

Quality Control Summary

Client: **CH2MHILL**

Project: **0011136** **160660.02.FF.SA**

Explanation of codes

D *Not applicable due to sample dilut*

L *Not applicable due to MDL proxin*

X00423	XG.2000.1233-4	56-23-5	Carbon tetrachloride	ND	mg / Kg	1	0.005	11/02/00
X00423	XG.2000.1232-8	108-90-7	Chlorobenzene	ND	mg / Kg	1	0.005	11/02/00
X00423	XG.2000.1233-4	108-90-7	Chlorobenzene	ND	mg / Kg	1	0.005	11/02/00
X00423	XG.2000.1232-8	124-48-1	Chlorodibromomethane	ND	mg / Kg	1	0.005	11/02/00
X00423	XG.2000.1233-4	124-48-1	Chlorodibromomethane	ND	mg / Kg	1	0.005	11/02/00
X00423	XG.2000.1232-8	75-00-3	Chloroethane	ND	mg / Kg	1	0.025	11/02/00
X00423	XG.2000.1233-4	75-00-3	Chloroethane	ND	mg / Kg	1	0.025	11/02/00
X00423	XG.2000.1232-8	67-66-3	Chloroform	ND	mg / Kg	1	0.005	11/02/00
X00423	XG.2000.1233-4	67-66-3	Chloroform	ND	mg / Kg	1	0.005	11/02/00
X00423	XG.2000.1232-8	74-87-3	Chloromethane	ND	mg / Kg	1	0.025	11/02/00
X00423	XG.2000.1233-4	74-87-3	Chloromethane	ND	mg / Kg	1	0.025	11/02/00
X00423	XG.2000.1232-8	156-59-2	cis-1,2 dichloroethene	ND	mg / Kg	1	0.005	11/02/00
X00423	XG.2000.1233-4	156-59-2	cis-1,2 dichloroethene	ND	mg / Kg	1	0.005	11/02/00
X00423	XG.2000.1232-8	10061-01-5	cis-1,3 dichloropropene	ND	mg / Kg	1	0.005	11/02/00
X00423	XG.2000.1233-4	10061-01-5	cis-1,3 dichloropropene	ND	mg / Kg	1	0.005	11/02/00
X00423	XG.2000.1232-8	74-95-3	Dibromomethane	ND	mg / Kg	1	0.005	11/02/00
X00423	XG.2000.1233-4	74-95-3	Dibromomethane	ND	mg / Kg	1	0.005	11/02/00
X00423	XG.2000.1232-8	97-63-2	Ethyl methacrylate	ND	mg / Kg	1	0.025	11/02/00
X00423	XG.2000.1233-4	97-63-2	Ethyl methacrylate	ND	mg / Kg	1	0.025	11/02/00
X00423	XG.2000.1232-8	100-41-4	Ethylbenzene	ND	mg / Kg	1	0.005	11/02/00
X00423	XG.2000.1233-4	100-41-4	Ethylbenzene	ND	mg / Kg	1	0.005	11/02/00
X00423	XG.2000.1232-8		Freon 113	ND	mg / Kg	1	0.025	11/02/00
X00423	XG.2000.1233-4		Freon 113	ND	mg / Kg	1	0.025	11/02/00
X00423	XG.2000.1232-8	75-71-8	Freon 12	ND	mg / Kg	1	0.05	11/02/
X00423	XG.2000.1233-4	75-71-8	Freon 12	ND	mg / Kg	1	0.05	11/0
X00423	XG.2000.1232-8	74-88-4	Iodomethane	ND	mg / Kg	1	0.025	11/02/00
X00423	XG.2000.1233-4	74-88-4	Iodomethane	ND	mg / Kg	1	0.025	11/02/00
X00423	XG.2000.1232-8	1634-04-4	Methyl t-butyl ether (MTBE)	ND	mg / Kg	1	0.005	11/02/00
X00423	XG.2000.1233-4	1634-04-4	Methyl t-butyl ether (MTBE)	ND	mg / Kg	1	0.005	11/02/00
X00423	XG.2000.1232-8	75-09-2	Methylene chloride	ND	mg / Kg	1	0.05	11/02/00
X00423	XG.2000.1233-4	75-09-2	Methylene chloride	ND	mg / Kg	1	0.05	11/02/00
X00423	XG.2000.1232-8	91-20-3	Naphthalene	ND	mg / Kg	1	0.025	11/02/00
X00423	XG.2000.1233-4	91-20-3	Naphthalene	ND	mg / Kg	1	0.025	11/02/00
X00423	XG.2000.1232-8	95-47-6	o-Xylene	ND	mg / Kg	1	0.005	11/02/00
X00423	XG.2000.1233-4	95-47-6	o-Xylene	ND	mg / Kg	1	0.005	11/02/00
X00423	XG.2000.1232-8	108-38-3/106-42	p/m Xylenes	ND	mg / Kg	1	0.01	11/02/00
X00423	XG.2000.1233-4	108-38-3/106-42	p/m Xylenes	ND	mg / Kg	1	0.01	11/02/00
X00423	XG.2000.1232-8	100-42-5	Styrene	ND	mg / Kg	1	0.005	11/02/00
X00423	XG.2000.1233-4	100-42-5	Styrene	ND	mg / Kg	1	0.005	11/02/00
X00423	XG.2000.1232-8	156-60-5	t-1,2 Dichloroethene	ND	mg / Kg	1	0.005	11/02/00
X00423	XG.2000.1233-4	156-60-5	t-1,2 Dichloroethene	ND	mg / Kg	1	0.005	11/02/00
X00423	XG.2000.1232-8	10061-02-6	t-1,3 Dichloropropene	ND	mg / Kg	1	0.005	11/02/00
X00423	XG.2000.1233-4	10061-02-6	t-1,3 Dichloropropene	ND	mg / Kg	1	0.005	11/02/00
X00423	XG.2000.1232-8	127-18-4	Tetrachloroethene	ND	mg / Kg	1	0.005	11/02/00
X00423	XG.2000.1233-4	127-18-4	Tetrachloroethene	ND	mg / Kg	1	0.005	11/02/00
X00423	XG.2000.1232-8	108-88-3	Toluene	ND	mg / Kg	1	0.005	11/02/00
X00423	XG.2000.1233-4	108-88-3	Toluene	ND	mg / Kg	1	0.005	11/02/00
X00423	XG.2000.1232-8	79-01-6	Trichloroethene	ND	mg / Kg	1	0.005	11/02/00
X00423	XG.2000.1233-4	79-01-6	Trichloroethene	ND	mg / Kg	1	0.005	11/0

Quality Control Summary

Explanation of codes

D *Not applicable due to sample dilution*
L *Not applicable due to MDL proximity*

Client: CH2MHILL
Project: 0011136 160660.02.FF.SA

X00423	XG.2000.1232-8	75-69-4	Trichlorofluoromethane	ND	mg / Kg	1	0.025		11/02/00
X00423	XG.2000.1233-4	75-69-4	Trichlorofluoromethane	ND	mg / Kg	1	0.025		11/02/00
X00423	XG.2000.1232-8	108-05-4	Vinyl acetate	ND	mg / Kg	1	0.025		11/02/00
X00423	XG.2000.1233-4	108-05-4	Vinyl acetate	ND	mg / Kg	1	0.025		11/02/00
X00423	XG.2000.1232-8	75-01-4	Vinyl chloride	ND	mg / Kg	1	0.025		11/02/00
X00423	XG.2000.1233-4	75-01-4	Vinyl chloride	ND	mg / Kg	1	0.025		11/02/00
X00423-032		**SW846 8260A Purgeable VOCs by GC/MS**							
X00423	XG.2000.1292-1	75-34-3	1,1 Dichloroethane	ND	mg / Kg	1	0.005		11/15/00
X00423	XG.2000.1292-1	75-34-3	1,1 Dichloroethene	ND	mg / Kg	1	0.005		11/15/00
X00423	XG.2000.1292-1	71-55-6	1,1,1 Trichloroethane	ND	mg / Kg	1	0.005		11/15/00
X00423	XG.2000.1292-1	630-20-6	1,1,1,2 Tetrachloroethane	ND	mg / Kg	1	0.005		11/15/00
X00423	XG.2000.1292-1	79-00-5	1,1,2 Trichloroethane	ND	mg / Kg	1	0.005		11/15/00
X00423	XG.2000.1292-1	79-34-5	1,1,2,2 Tetrachloroethane	ND	mg / Kg	1	0.005		11/15/00
X00423	XG.2000.1292-1	106-93-4	1,2 Dibromoethane (EDB)	ND	mg / Kg	1	0.005		11/15/00
X00423	XG.2000.1292-1	95-50-1	1,2 Dichlorobenzene	ND	mg / Kg	1	0.005		11/15/00
X00423	XG.2000.1292-1	107-06-2	1,2 Dichloroethane	ND	mg / Kg	1	0.005		11/15/00
X00423	XG.2000.1292-1	78-87-5	1,2 Dichloropropane	ND	mg / Kg	1	0.005		11/15/00
X00423	XG.2000.1292-1	96-18-4	1,2,3 Trichloropropane	ND	mg / Kg	1	0.005		11/15/00
X00423	XG.2000.1292-1	95-63-6	1,2,4-Trimethylbenzene	ND	mg / Kg	1	0.005		11/15/00
X00423	XG.2000.1292-1	541-73-1	1,3 Dichlorobenzene	ND	mg / Kg	1	0.005		11/15/00
X00423	XG.2000.1292-1	108-67-8	1,3,5-Trimethylbenzene	ND	mg / Kg	1	0.005		11/15/00
X00423	XG.2000.1292-1	764-41-0	1,4 Dichloro-2-butene	ND	mg / Kg	1	0.05		11/15/00
[illegible]423	XG.2000.1292-1	106-46-7	1,4 Dichlorobenzene	ND	mg / Kg	1	0.005		11/15/00
[illegible]23	XG.2000.1292-1	78-93-3	2-Butanone (MEK)	ND	mg / Kg	1	0.025		11/15/00
X00423	XG.2000.1292-1	110-75-8	2-Chloroethylvinylether	ND	mg / Kg	1	0.025		11/15/00
X00423	XG.2000.1292-1	591-78-6	2-Hexanone (MBK)	ND	mg / Kg	1	0.025		11/15/00
X00423	XG.2000.1292-1	108-10-1	4-Methyl-2-pentanone (MIBK)	ND	mg / Kg	1	0.025		11/15/00
X00423	XG.2000.1292-1	67-64-1	Acetone	ND	mg / Kg	1	0.05		11/15/00
X00423	XG.2000.1292-1	107-02-8	Acrolein	ND	mg / Kg	1	0.1		11/15/00
X00423	XG.2000.1292-1	107-13-1	Acrylonitrile	ND	mg / Kg	1	0.1		11/15/00
X00423	XG.2000.1292-1	71-43-2	Benzene	ND	mg / Kg	1	0.005		11/15/00
X00423	XG.2000.1292-1	75-27-4	Bromodichloromethane	ND	mg / Kg	1	0.005		11/15/00
X00423	XG.2000.1292-1	75-25-2	Bromoform	ND	mg / Kg	1	0.005		11/15/00
X00423	XG.2000.1292-1	74-83-9	Bromomethane	ND	mg / Kg	1	0.025		11/15/00
X00423	XG.2000.1292-1	75-15-0	Carbon disulfide	ND	mg / Kg	1	0.025		11/15/00
X00423	XG.2000.1292-1	56-23-5	Carbon tetrachloride	ND	mg / Kg	1	0.005		11/15/00
X00423	XG.2000.1292-1	108-90-7	Chlorobenzene	ND	mg / Kg	1	0.005		11/15/00
X00423	XG.2000.1292-1	124-48-1	Chlorodibromomethane	ND	mg / Kg	1	0.005		11/15/00
X00423	XG.2000.1292-1	75-00-3	Chloroethane	ND	mg / Kg	1	0.025		11/15/00
X00423	XG.2000.1292-1	67-66-3	Chloroform	ND	mg / Kg	1	0.005		11/15/00
X00423	XG.2000.1292-1	74-87-3	Chloromethane	ND	mg / Kg	1	0.025		11/15/00
X00423	XG.2000.1292-1	156-59-2	cis-1,2 dichloroethene	ND	mg / Kg	1	0.005		11/15/00
X00423	XG.2000.1292-1	10061-01-5	cis-1,3 dichloropropene	ND	mg / Kg	1	0.005		11/15/00
X00423	XG.2000.1292-1	74-95-3	Dibromomethane	ND	mg / Kg	1	0.005		11/15/00
X00423	XG.2000.1292-1	97-63-2	Ethyl methacrylate	ND	mg / Kg	1	0.025		11/15/00
X00423	XG.2000.1292-1	100-41-4	Ethylbenzene	ND	mg / Kg	1	0.005		11/15/00
X00423	XG.2000.1292-1		Freon 113	ND	mg / Kg	1	0.025		11/15/00
X00423	XG.2000.1292-1	75-71-8	Freon 12	ND	mg / Kg	1	0.05		11/15/00
[illegible]23	XG.2000.1292-1	74-88-4	Iodomethane	ND	mg / Kg	1	0.025		11/15/00
[illegible]423	XG.2000.1292-1	1634-04-4	Methyl t-butyl ether (MTBE)	ND	mg / Kg	1	0.005		11/15/00

Quality Control Summary

Client: **CH2MHILL**

Project: **0011136` 160660.02.FF.SA**

Explanation of codes

D *Not applicable due to sample dilut*

L *Not applicable due to MDL proxim*

X00423	XG.2000.1292-1	75-09-2	Methylene chloride	ND	mg / Kg	1	0.05	11/15/0
X00423	XG.2000.1292-1	91-20-3	Naphthalene	ND	mg / Kg	1	0.025	11/15/0
X00423	XG.2000.1292-1	95-47-6	o-Xylene	ND	mg / Kg	1	0.005	11/15/0
X00423	XG.2000.1292-1	108-38-3/106-42	p/m Xylenes	ND	mg / Kg	1	0.01	11/15/0
X00423	XG.2000.1292-1	100-42-5	Styrene	ND	mg / Kg	1	0.005	11/15/0
X00423	XG.2000.1292-1	156-60-5	t-1,2 Dichloroethene	ND	mg / Kg	1	0.005	11/15/0
X00423	XG.2000.1292-1	10061-02-6	t-1,3 Dichloropropene	ND	mg / Kg	1	0.005	11/15/0
X00423	XG.2000.1292-1	127-18-4	Tetrachloroethene	ND	mg / Kg	1	0.005	11/15/0
X00423	XG.2000.1292-1	108-88-3	Toluene	ND	mg / Kg	1	0.005	11/15/0
X00423	XG.2000.1292-1	79-01-6	Trichloroethene	ND	mg / Kg	1	0.005	11/15/0
X00423	XG.2000.1292-1	75-69-4	Trichlorofluoromethane	ND	mg / Kg	1	0.025	11/15/0
X00423	XG.2000.1292-1	108-05-4	Vinyl acetate	ND	mg / Kg	1	0.025	11/15/0
X00423	XG.2000.1292-1	75-01-4	Vinyl chloride	ND	mg / Kg	1	0.025	11/15/0
X00423-034		**SW846 8260A Purgeable VOCs by GC/MS**						
X00423	XG.2000.1292-3	75-34-3	1,1 Dichloroethane	ND	mg / Kg	1	0.005	11/17/0
X00423	XG.2000.1293-1	75-34-3	1,1 Dichloroethane	ND	mg / Kg	1	0.005	11/17/0
X00423	XG.2000.1292-3	75-34-3	1,1 Dichloroethene	ND	mg / Kg	1	0.005	11/17/0
X00423	XG.2000.1293-1	75-34-3	1,1 Dichloroethene	ND	mg / Kg	1	0.005	11/17/0
X00423	XG.2000.1292-3	71-55-6	1,1,1 Trichloroethane	ND	mg / Kg	1	0.005	11/17/0
X00423	XG.2000.1293-1	71-55-6	1,1,1 Trichloroethane	ND	mg / Kg	1	0.005	11/17/0
X00423	XG.2000.1292-3	630-20-6	1,1,1,2 Tetrachloroethane	ND	mg / Kg	1	0.005	11/17/0
X00423	XG.2000.1293-1	630-20-6	1,1,1,2 Tetrachloroethane	ND	mg / Kg	1	0.005	11/17/0
X00423	XG.2000.1292-3	79-00-5	1,1,2 Trichloroethane	ND	mg / Kg	1	0.005	11/17/
X00423	XG.2000.1293-1	79-00-5	1,1,2 Trichloroethane	ND	mg / Kg	1	0.005	11/17
X00423	XG.2000.1292-3	79-34-5	1,1,2,2 Tetrachloroethane	ND	mg / Kg	1	0.005	11/17/0
X00423	XG.2000.1293-1	79-34-5	1,1,2,2 Tetrachloroethane	ND	mg / Kg	1	0.005	11/17/0
X00423	XG.2000.1292-3	106-93-4	1,2 Dibromoethane (EDB)	ND	mg / Kg	1	0.005	11/17/0
X00423	XG.2000.1293-1	106-93-4	1,2 Dibromoethane (EDB)	ND	mg / Kg	1	0.005	11/17/0
X00423	XG.2000.1292-3	95-50-1	1,2 Dichlorobenzene	ND	mg / Kg	1	0.005	11/17/0
X00423	XG.2000.1293-1	95-50-1	1,2 Dichlorobenzene	ND	mg / Kg	1	0.005	11/17/0
X00423	XG.2000.1292-3	107-06-2	1,2 Dichloroethane	ND	mg / Kg	1	0.005	11/17/0
X00423	XG.2000.1293-1	107-06-2	1,2 Dichloroethane	ND	mg / Kg	1	0.005	11/17/0
X00423	XG.2000.1292-3	78-87-5	1,2 Dichloropropane	ND	mg / Kg	1	0.005	11/17/0
X00423	XG.2000.1293-1	78-87-5	1,2 Dichloropropane	ND	mg / Kg	1	0.005	11/17/0
X00423	XG.2000.1292-3	96-18-4	1,2,3 Trichloropropane	ND	mg / Kg	1	0.005	11/17/0
X00423	XG.2000.1293-1	96-18-4	1,2,3 Trichloropropane	ND	mg / Kg	1	0.005	11/17/0
X00423	XG.2000.1292-3	95-63-6	1,2,4-Trimethylbenzene	ND	mg / Kg	1	0.005	11/17/0
X00423	XG.2000.1293-1	95-63-6	1,2,4-Trimethylbenzene	ND	mg / Kg	1	0.005	11/17/0
X00423	XG.2000.1292-3	541-73-1	1,3 Dichlorobenzene	ND	mg / Kg	1	0.005	11/17/0
X00423	XG.2000.1293-1	541-73-1	1,3 Dichlorobenzene	ND	mg / Kg	1	0.005	11/17/0
X00423	XG.2000.1292-3	108-67-8	1,3,5-Trimethylbenzene	ND	mg / Kg	1	0.005	11/17/00
X00423	XG.2000.1293-1	108-67-8	1,3,5-Trimethylbenzene	ND	mg / Kg	1	0.005	11/17/00
X00423	XG.2000.1292-3	764-41-0	1,4 Dichloro-2-butene	ND	mg / Kg	1	0.05	11/17/00
X00423	XG.2000.1293-1	764-41-0	1,4 Dichloro-2-butene	ND	mg / Kg	1	0.05	11/17/00
X00423	XG.2000.1292-3	106-46-7	1,4 Dichlorobenzene	ND	mg / Kg	1	0.005	11/17/00
X00423	XG.2000.1293-1	106-46-7	1,4 Dichlorobenzene	ND	mg / Kg	1	0.005	11/17/00
X00423	XG.2000.1292-3	78-93-3	2-Butanone (MEK)	ND	mg / Kg	1	0.025	11/17/00
X00423	XG.2000.1293-1	78-93-3	2-Butanone (MEK)	ND	mg / Kg	1	0.025	11/17/00
X00423	XG.2000.1292-3	110-75-8	2-Chloroethylvinylether	ND	mg / Kg	1	0.025	11/17

Quality Control Summary

Explanation of codes

D	*Not applicable due to sample dilution*
L	*Not applicable due to MDL proximity*

C[illegible]nt: **CH2MHILL**

[illegible]ect: **0011136** **160660.02.FF.SA**

X00423	XG.2000.1293-1	110-75-8	2-Chloroethylvinylether	ND	mg / Kg	1	0.025	11/17/00
X00423	XG.2000.1292-3	591-78-6	2-Hexanone (MBK)	ND	mg / Kg	1	0.025	11/17/00
X00423	XG.2000.1293-1	591-78-6	2-Hexanone (MBK)	ND	mg / Kg	1	0.025	11/17/00
X00423	XG.2000.1292-3	108-10-1	4-Methyl-2-pentanone (MIBK)	ND	mg / Kg	1	0.025	11/17/00
X00423	XG.2000.1293-1	108-10-1	4-Methyl-2-pentanone (MIBK)	ND	mg / Kg	1	0.025	11/17/00
X00423	XG.2000.1292-3	67-64-1	Acetone	ND	mg / Kg	1	0.05	11/17/00
X00423	XG.2000.1293-1	67-64-1	Acetone	ND	mg / Kg	1	0.05	11/17/00
X00423	XG.2000.1292-3	107-02-8	Acrolein	ND	mg / Kg	1	0.1	11/17/00
X00423	XG.2000.1293-1	107-02-8	Acrolein	ND	mg / Kg	1	0.1	11/17/00
X00423	XG.2000.1292-3	107-13-1	Acrylonitrile	ND	mg / Kg	1	0.1	11/17/00
X00423	XG.2000.1293-1	107-13-1	Acrylonitrile	ND	mg / Kg	1	0.1	11/17/00
X00423	XG.2000.1292-3	71-43-2	Benzene	ND	mg / Kg	1	0.005	11/17/00
X00423	XG.2000.1293-1	71-43-2	Benzene	ND	mg / Kg	1	0.005	11/17/00
X00423	XG.2000.1292-3	75-27-4	Bromodichloromethane	ND	mg / Kg	1	0.005	11/17/00
X00423	XG.2000.1293-1	75-27-4	Bromodichloromethane	ND	mg / Kg	1	0.005	11/17/00
X00423	XG.2000.1292-3	75-25-2	Bromoform	ND	mg / Kg	1	0.005	11/17/00
X00423	XG.2000.1293-1	75-25-2	Bromoform	ND	mg / Kg	1	0.005	11/17/00
X00423	XG.2000.1292-3	74-83-9	Bromomethane	ND	mg / Kg	1	0.025	11/17/00
X00423	XG.2000.1293-1	74-83-9	Bromomethane	ND	mg / Kg	1	0.025	11/17/00
X00423	XG.2000.1292-3	75-15-0	Carbon disulfide	ND	mg / Kg	1	0.025	11/17/00
X00423	XG.2000.1293-1	75-15-0	Carbon disulfide	ND	mg / Kg	1	0.025	11/17/00
X00423	XG.2000.1292-3	56-23-5	Carbon tetrachloride	ND	mg / Kg	1	0.005	11/17/00
X00423	XG.2000.1293-1	56-23-5	Carbon tetrachloride	ND	mg / Kg	1	0.005	11/17/00
[illegible]3	XG.2000.1292-3	108-90-7	Chlorobenzene	ND	mg / Kg	1	0.005	11/17/00
[illegible]23	XG.2000.1293-1	108-90-7	Chlorobenzene	ND	mg / Kg	1	0.005	11/17/00
X00423	XG.2000.1292-3	124-48-1	Chlorodibromomethane	ND	mg / Kg	1	0.005	11/17/00
X00423	XG.2000.1293-1	124-48-1	Chlorodibromomethane	ND	mg / Kg	1	0.005	11/17/00
X00423	XG.2000.1292-3	75-00-3	Chloroethane	ND	mg / Kg	1	0.025	11/17/00
X00423	XG.2000.1293-1	75-00-3	Chloroethane	ND	mg / Kg	1	0.025	11/17/00
X00423	XG.2000.1292-3	67-66-3	Chloroform	ND	mg / Kg	1	0.005	11/17/00
X00423	XG.2000.1293-1	67-66-3	Chloroform	ND	mg / Kg	1	0.005	11/17/00
X00423	XG.2000.1292-3	74-87-3	Chloromethane	ND	mg / Kg	1	0.025	11/17/00
X00423	XG.2000.1293-1	74-87-3	Chloromethane	ND	mg / Kg	1	0.025	11/17/00
X00423	XG.2000.1292-3	156-59-2	cis-1,2 dichloroethene	ND	mg / Kg	1	0.005	11/17/00
X00423	XG.2000.1293-1	156-59-2	cis-1,2 dichloroethene	ND	mg / Kg	1	0.005	11/17/00
X00423	XG.2000.1292-3	10061-01-5	cis-1,3 dichloropropene	ND	mg / Kg	1	0.005	11/17/00
X00423	XG.2000.1293-1	10061-01-5	cis-1,3 dichloropropene	ND	mg / Kg	1	0.005	11/17/00
X00423	XG.2000.1292-3	74-95-3	Dibromomethane	ND	mg / Kg	1	0.005	11/17/00
X00423	XG.2000.1293-1	74-95-3	Dibromomethane	ND	mg / Kg	1	0.005	11/17/00
X00423	XG.2000.1292-3	97-63-2	Ethyl methacrylate	ND	mg / Kg	1	0.025	11/17/00
X00423	XG.2000.1293-1	97-63-2	Ethyl methacrylate	ND	mg / Kg	1	0.025	11/17/00
X00423	XG.2000.1292-3	100-41-4	Ethylbenzene	ND	mg / Kg	1	0.005	11/17/00
X00423	XG.2000.1293-1	100-41-4	Ethylbenzene	ND	mg / Kg	1	0.005	11/17/00
X00423	XG.2000.1292-3		Freon 113	ND	mg / Kg	1	0.025	11/17/00
X00423	XG.2000.1293-1		Freon 113	ND	mg / Kg	1	0.025	11/17/00
X00423	XG.2000.1292-3	75-71-8	Freon 12	ND	mg / Kg	1	0.05	11/17/00
X00423	XG.2000.1293-1	75-71-8	Freon 12	ND	mg / Kg	1	0.05	11/17/00
X00423	XG.2000.1292-3	74-88-4	Iodomethane	ND	mg / Kg	1	0.025	11/17/00
X00423	XG.2000.1293-1	74-88-4	Iodomethane	ND	mg / Kg	1	0.025	11/17/00
[illegible]3	XG.2000.1292-3	1634-04-4	Methyl t-butyl ether (MTBE)	ND	mg / Kg	1	0.005	11/17/00
X00423	XG.2000.1293-1	1634-04-4	Methyl t-butyl ether (MTBE)	ND	mg / Kg	1	0.005	11/17/00

Quality Control Summary

Client: **CH2MHILL**

Project: **0011136** **160660.02.FF.SA**

Explanation of codes

D *Not applicable due to sample dilut*

L *Not applicable due to MDL proxim*

X00423	XG.2000.1292-3	75-09-2	Methylene chloride	ND	mg / Kg	1	0.05	11/17/0
X00423	XG.2000.1293-1	75-09-2	Methylene chloride	ND	mg / Kg	1	0.05	11/17/0
X00423	XG.2000.1292-3	91-20-3	Naphthalene	ND	mg / Kg	1	0.025	11/17/0
X00423	XG.2000.1293-1	91-20-3	Naphthalene	ND	mg / Kg	1	0.025	11/17/0
X00423	XG.2000.1292-3	95-47-6	o-Xylene	ND	mg / Kg	1	0.005	11/17/0
X00423	XG.2000.1293-1	95-47-6	o-Xylene	ND	mg / Kg	1	0.005	11/17/0
X00423	XG.2000.1292-3	108-38-3/106-42	p/m Xylenes	ND	mg / Kg	1	0.01	11/17/0
X00423	XG.2000.1293-1	108-38-3/106-42	p/m Xylenes	ND	mg / Kg	1	0.01	11/17/0
X00423	XG.2000.1292-3	100-42-5	Styrene	ND	mg / Kg	1	0.005	11/17/0
X00423	XG.2000.1293-1	100-42-5	Styrene	ND	mg / Kg	1	0.005	11/17/0
X00423	XG.2000.1292-3	156-60-5	t-1,2 Dichloroethene	ND	mg / Kg	1	0.005	11/17/0
X00423	XG.2000.1293-1	156-60-5	t-1,2 Dichloroethene	ND	mg / Kg	1	0.005	11/17/0
X00423	XG.2000.1292-3	10061-02-6	t-1,3 Dichloropropene	ND	mg / Kg	1	0.005	11/17/0
X00423	XG.2000.1293-1	10061-02-6	t-1,3 Dichloropropene	ND	mg / Kg	1	0.005	11/17/0
X00423	XG.2000.1292-3	127-18-4	Tetrachloroethene	ND	mg / Kg	1	0.005	11/17/0
X00423	XG.2000.1293-1	127-18-4	Tetrachloroethene	ND	mg / Kg	1	0.005	11/17/0
X00423	XG.2000.1292-3	108-88-3	Toluene	ND	mg / Kg	1	0.005	11/17/0
X00423	XG.2000.1293-1	108-88-3	Toluene	ND	mg / Kg	1	0.005	11/17/0
X00423	XG.2000.1292-3	79-01-6	Trichloroethene	ND	mg / Kg	1	0.005	11/17/0
X00423	XG.2000.1293-1	79-01-6	Trichloroethene	ND	mg / Kg	1	0.005	11/17/0
X00423	XG.2000.1292-3	75-69-4	Trichlorofluoromethane	ND	mg / Kg	1	0.025	11/17/0
X00423	XG.2000.1293-1	75-69-4	Trichlorofluoromethane	ND	mg / Kg	1	0.025	11/17/0
X00423	XG.2000.1292-3	108-05-4	Vinyl acetate	ND	mg / Kg	1	0.025	11/17
X00423	XG.2000.1293-1	108-05-4	Vinyl acetate	ND	mg / Kg	1	0.025	11/17
X00423	XG.2000.1292-3	75-01-4	Vinyl chloride	ND	mg / Kg	1	0.025	11/17/0
X00423	XG.2000.1293-1	75-01-4	Vinyl chloride	ND	mg / Kg	1	0.025	11/17/0
X00441-001		**SW846 ME/8015A Diesel Range Organics by GC/FID**						
X00441	XG.2000.1276-1		Diesel Range Organics	ND	mg / Kg	1	25	11/16/0
X00441-006		**SW846 ME/8015A Diesel Range Organics by GC/FID**						
X00441	XG.2000.1276-4		Diesel Range Organics	ND	mg / Kg	1	25	11/16/0
X00441-016		**SW846 ME/8015A Diesel Range Organics by GC/FID**						
X00441	XG.2000.1287-1		Diesel Range Organics	ND	mg / Kg	1	25	11/18/0
X00441-019		**SW846 ME/8015A Diesel Range Organics by GC/FID**						
X00441	XG.2000.1306-1		Diesel Range Organics	ND	mg / Kg	1	25	11/28/0
X00441-025		**SW846 ME/8015A Diesel Range Organics by GC/FID**						
X00441	XG.2000.1311-1		Diesel Range Organics	ND	mg / Kg	1	25	11/29/0
X00443-001		**SW846 5030A/8015A GRO by GC/FID**						
X00443	XG.2000.1275-1		Gasoline Range Organics	ND	mg / Kg	1	0.25	11/16/0
X00443-013		**SW846 5030A/8015A GRO by GC/FID**						
X00443	XG.2000.1286-1		Gasoline Range Organics	ND	mg / Kg	1	0.25	11/18/00
X00443-016		**SW846 5030A/8015A GRO by GC/FID**						
X00443	XG.2000.1305-1		Gasoline Range Organics	ND	mg / Kg	1	0.25	11/28/00
X00443-022		**SW846 5030A/8015A GRO by GC/FID**						
X00443	XG.2000.1310-1		Gasoline Range Organics	ND	mg / Kg	1	0.25	11/29/

Quality Control Summary

Explanation of codes

D *Not applicable due to sample dilution*
L *Not applicable due to MDL proximity*

Client: **CH2MHILL**
Project: **0011136** **160660.02.FF.SA**

QC Type **MS: Matrix Spike** QC Matrix **SOLID**

QC Group	Run Sequence	CAS #	Analyte	Result	Units	Dilution Factor	Detection Limit	Code	Run Date
X00441-008		**SW846 ME/8015A Diesel Range Organics by GC/FID**							
X00441	XG.2000.1276-6		Diesel Range Organics	84	% Recovery	1	NA		11/16/00
X00443-008		**SW846 5030A/8015A GRO by GC/FID**							
X00443	XG.2000.1275-8		Gasoline Range Organics	99	% Recovery	1	NA		11/16/00

QC Type **MSD: Matrix Spike Duplicate Accuracy** QC Matrix **SOLID**

QC Group	Run Sequence	CAS #	Analyte	Result	Units	Dilution Factor	Detection Limit	Code	Run Date
X00441-009		**SW846 ME/8015A Diesel Range Organics by GC/FID**							
X00441	XG.2000.1276-7		Diesel Range Organics	85	% Recovery	1	NA		11/16/00
X00443-009		**SW846 5030A/8015A GRO by GC/FID**							
X00443	XG.2000.1275-9		Gasoline Range Organics	96	% Recovery	1	NA		11/16/00

QC Type **MSD: Matrix Spike Duplicate Precision** QC Matrix **SOLID**

QC Group	Run Sequence	CAS #	Analyte	Result	Units	Dilution Factor	Detection Limit	Code	Run Date
X00441-009		**SW846 ME/8015A Diesel Range Organics by GC/FID**							
X00441	XG.2000.1276-7		Diesel Range Organics	1	RPD	1	NA		11/16/00
X00443-009		**SW846 5030A/8015A GRO by GC/FID**							
X00443	XG.2000.1275-9		Gasoline Range Organics	2	RPD	1	NA		11/16/00

Quality Control Summary

Client: **CH2MHILL**

Project: **0011136** **160660.02.FF.SA**

Explanation of codes

D *Not applicable due to sample dilut*

L *Not applicable due to MDL proxim*

QC Type **MB: Method Blank** QC Matrix **WASTE**

QC Group	Run Sequence	CAS #	Analyte	Result	Units	Dilution Factor	Detection Limit	Code	Run Date
X00423-016		SW846 5030A/8260A Purgeable VOCs by GC/MS							
X00423	XG.2000.1252-4	75-34-3	1,1 Dichloroethane	ND	mg / Kg	1	0.05		11/03/00
X00423	XG.2000.1252-4	75-34-3	1,1 Dichloroethene	ND	mg / Kg	1	0.05		11/03/00
X00423	XG.2000.1252-4	71-55-6	1,1,1 Trichloroethane	ND	mg / Kg	1	0.05		11/03/00
X00423	XG.2000.1252-4	630-20-6	1,1,1,2 Tetrachloroethane	ND	mg / Kg	1	0.05		11/03/00
X00423	XG.2000.1252-4	79-00-5	1,1,2 Trichloroethane	ND	mg / Kg	1	0.05		11/03/00
X00423	XG.2000.1252-4	79-34-5	1,1,2,2 Tetrachloroethane	ND	mg / Kg	1	0.05		11/03/00
X00423	XG.2000.1252-4	106-93-4	1,2 Dibromoethane (EDB)	ND	mg / Kg	1	0.05		11/03/00
X00423	XG.2000.1252-4	95-50-1	1,2 Dichlorobenzene	ND	mg / Kg	1	0.05		11/03/00
X00423	XG.2000.1252-4	107-06-2	1,2 Dichloroethane	ND	mg / Kg	1	0.05		11/03/00
X00423	XG.2000.1252-4	78-87-5	1,2 Dichloropropane	ND	mg / Kg	1	0.05		11/03/00
X00423	XG.2000.1252-4	96-18-4	1,2,3 Trichloropropane	ND	mg / Kg	1	0.05		11/03/00
X00423	XG.2000.1252-4	95-63-6	1,2,4-Trimethylbenzene	ND	mg / Kg	1	0.05		11/03/00
X00423	XG.2000.1252-4	541-73-1	1,3 Dichlorobenzene	ND	mg / Kg	1	0.05		11/03/00
X00423	XG.2000.1252-4	108-67-8	1,3,5-Trimethylbenzene	ND	mg / Kg	1	0.05		11/03/00
X00423	XG.2000.1252-4	764-41-0	1,4 Dichloro-2-butene	ND	mg / Kg	1	0.5		11/03/00
X00423	XG.2000.1252-4	106-46-7	1,4 Dichlorobenzene	ND	mg / Kg	1	0.05		11/03/00
X00423	XG.2000.1252-4	78-93-3	2-Butanone (MEK)	ND	mg / Kg	1	0.25		11/03
X00423	XG.2000.1252-4	110-75-8	2-Chloroethylvinylether	ND	mg / Kg	1	0.25		11/03
X00423	XG.2000.1252-4	591-78-6	2-Hexanone (MBK)	ND	mg / Kg	1	0.25		11/03/00
X00423	XG.2000.1252-4	108-10-1	4-Methyl-2-pentanone (MIBK)	ND	mg / Kg	1	0.25		11/03/00
X00423	XG.2000.1252-4	67-64-1	Acetone	ND	mg / Kg	1	0.5		11/03/00
X00423	XG.2000.1252-4	107-02-8	Acrolein	ND	mg / Kg	1	1		11/03/00
X00423	XG.2000.1252-4	107-13-1	Acrylonitrile	ND	mg / Kg	1	1		11/03/00
X00423	XG.2000.1252-4	71-43-2	Benzene	ND	mg / Kg	1	0.05		11/03/00
X00423	XG.2000.1252-4	75-27-4	Bromodichloromethane	ND	mg / Kg	1	0.05		11/03/00
X00423	XG.2000.1252-4	75-25-2	Bromoform	ND	mg / Kg	1	0.05		11/03/00
X00423	XG.2000.1252-4	74-83-9	Bromomethane	ND	mg / Kg	1	0.25		11/03/00
X00423	XG.2000.1252-4	75-15-0	Carbon disulfide	ND	mg / Kg	1	0.25		11/03/00
X00423	XG.2000.1252-4	56-23-5	Carbon tetrachloride	ND	mg / Kg	1	0.05		11/03/00
X00423	XG.2000.1252-4	108-90-7	Chlorobenzene	ND	mg / Kg	1	0.05		11/03/00
X00423	XG.2000.1252-4	124-48-1	Chlorodibromomethane	ND	mg / Kg	1	0.05		11/03/00
X00423	XG.2000.1252-4	75-00-3	Chloroethane	ND	mg / Kg	1	0.25		11/03/00
X00423	XG.2000.1252-4	67-66-3	Chloroform	ND	mg / Kg	1	0.05		11/03/00
X00423	XG.2000.1252-4	74-87-3	Chloromethane	ND	mg / Kg	1	0.25		11/03/00
X00423	XG.2000.1252-4	156-59-2	cis-1,2 dichloroethene	ND	mg / Kg	1	0.05		11/03/00
X00423	XG.2000.1252-4	10061-01-5	cis-1,3 dichloropropene	ND	mg / Kg	1	0.05		11/03/00
X00423	XG.2000.1252-4	74-95-3	Dibromomethane	ND	mg / Kg	1	0.05		11/03/00
X00423	XG.2000.1252-4	97-63-2	Ethyl methacrylate	ND	mg / Kg	1	0.25		11/03/00
X00423	XG.2000.1252-4	100-41-4	Ethylbenzene	ND	mg / Kg	1	0.05		11/03/00
X00423	XG.2000.1252-4		Freon 113	ND	mg / Kg	1	0.25		11/03/00
X00423	XG.2000.1252-4	75-71-8	Freon 12	ND	mg / Kg	1	0.5		11/03/00
X00423	XG.2000.1252-4	74-88-4	Iodomethane	ND	mg / Kg	1	0.25		11/03/00
X00423	XG.2000.1252-4	1634-04-4	Methyl t-butyl ether (MTBE)	ND	mg / Kg	1	0.05		11/03

Quality Control Summary

Explanation of codes

D *Not applicable due to sample dilution*
L *Not applicable due to MDL proximity*

C[illegible]t: **CH2MHILL**
[illegible]ect: **0011136** **160660.02.FF.SA**

X00423	XG.2000.1252-4	75-09-2	Methylene chloride	ND	mg / Kg	1	0.5		11/03/00
X00423	XG.2000.1252-4	91-20-3	Naphthalene	ND	mg / Kg	1	0.25		11/03/00
X00423	XG.2000.1252-4	95-47-6	o-Xylene	ND	mg / Kg	1	0.05		11/03/00
X00423	XG.2000.1252-4	108-38-3/106-42	p/m Xylenes	ND	mg / Kg	1	0.1		11/03/00
X00423	XG.2000.1252-4	100-42-5	Styrene	ND	mg / Kg	1	0.05		11/03/00
X00423	XG.2000.1252-4	156-60-5	t-1,2 Dichloroethene	ND	mg / Kg	1	0.05		11/03/00
X00423	XG.2000.1252-4	10061-02-6	t-1,3 Dichloropropene	ND	mg / Kg	1	0.05		11/03/00
X00423	XG.2000.1252-4	127-18-4	Tetrachloroethene	ND	mg / Kg	1	0.05		11/03/00
X00423	XG.2000.1252-4	108-88-3	Toluene	ND	mg / Kg	1	0.05		11/03/00
X00423	XG.2000.1252-4	79-01-6	Trichloroethene	ND	mg / Kg	1	0.05		11/03/00
X00423	XG.2000.1252-4	75-69-4	Trichlorofluoromethane	ND	mg / Kg	1	0.25		11/03/00
X00423	XG.2000.1252-4	108-05-4	Vinyl acetate	ND	mg / Kg	1	0.25		11/03/00
X00423	XG.2000.1252-4	75-01-4	Vinyl chloride	ND	mg / Kg	1	0.25		11/03/00
X00423-019		**SW846 5030A/8260A Purgeable VOCs by GC/MS**							
X00423	XG.2000.1252-7	75-34-3	1,1 Dichloroethane	ND	mg / Kg	1	0.05		11/07/00
X00423	XG.2000.1252-7	75-34-3	1,1 Dichloroethene	ND	mg / Kg	1	0.05		11/07/00
X00423	XG.2000.1252-7	71-55-6	1,1,1 Trichloroethane	ND	mg / Kg	1	0.05		11/07/00
X00423	XG.2000.1252-7	630-20-6	1,1,1,2 Tetrachloroethane	ND	mg / Kg	1	0.05		11/07/00
X00423	XG.2000.1252-7	79-00-5	1,1,2 Trichloroethane	ND	mg / Kg	1	0.05		11/07/00
X00423	XG.2000.1252-7	79-34-5	1,1,2,2 Tetrachloroethane	ND	mg / Kg	1	0.05		11/07/00
X00423	XG.2000.1252-7	106-93-4	1,2 Dibromoethane (EDB)	ND	mg / Kg	1	0.05		11/07/00
X00423	XG.2000.1252-7	95-50-1	1,2 Dichlorobenzene	ND	mg / Kg	1	0.05		11/07/00
[illegible]3	XG.2000.1252-7	107-06-2	1,2 Dichloroethane	ND	mg / Kg	1	0.05		11/07/00
X[illegible]23	XG.2000.1252-7	78-87-5	1,2 Dichloropropane	ND	mg / Kg	1	0.05		11/07/00
X00423	XG.2000.1252-7	96-18-4	1,2,3 Trichloropropane	ND	mg / Kg	1	0.05		11/07/00
X00423	XG.2000.1252-7	95-63-6	1,2,4-Trimethylbenzene	ND	mg / Kg	1	0.05		11/07/00
X00423	XG.2000.1252-7	541-73-1	1,3 Dichlorobenzene	ND	mg / Kg	1	0.05		11/07/00
X00423	XG.2000.1252-7	108-67-8	1,3,5-Trimethylbenzene	ND	mg / Kg	1	0.05		11/07/00
X00423	XG.2000.1252-7	764-41-0	1,4 Dichloro-2-butene	ND	mg / Kg	1	0.5		11/07/00
X00423	XG.2000.1252-7	106-46-7	1,4 Dichlorobenzene	ND	mg / Kg	1	0.05		11/07/00
X00423	XG.2000.1252-7	78-93-3	2-Butanone (MEK)	ND	mg / Kg	1	0.25		11/07/00
X00423	XG.2000.1252-7	110-75-8	2-Chloroethylvinylether	ND	mg / Kg	1	0.25		11/07/00
X00423	XG.2000.1252-7	591-78-6	2-Hexanone (MBK)	ND	mg / Kg	1	0.25		11/07/00
X00423	XG.2000.1252-7	108-10-1	4-Methyl-2-pentanone (MIBK)	ND	mg / Kg	1	0.25		11/07/00
X00423	XG.2000.1252-7	67-64-1	Acetone	ND	mg / Kg	1	0.5		11/07/00
X00423	XG.2000.1252-7	107-02-8	Acrolein	ND	mg / Kg	1	1		11/07/00
X00423	XG.2000.1252-7	107-13-1	Acrylonitrile	ND	mg / Kg	1	1		11/07/00
X00423	XG.2000.1252-7	71-43-2	Benzene	ND	mg / Kg	1	0.05		11/07/00
X00423	XG.2000.1252-7	75-27-4	Bromodichloromethane	ND	mg / Kg	1	0.05		11/07/00
X00423	XG.2000.1252-7	75-25-2	Bromoform	ND	mg / Kg	1	0.05		11/07/00
X00423	XG.2000.1252-7	74-83-9	Bromomethane	ND	mg / Kg	1	0.25		11/07/00
X00423	XG.2000.1252-7	75-15-0	Carbon disulfide	ND	mg / Kg	1	0.25		11/07/00
X00423	XG.2000.1252-7	56-23-5	Carbon tetrachloride	ND	mg / Kg	1	0.05		11/07/00
X00423	XG.2000.1252-7	108-90-7	Chlorobenzene	ND	mg / Kg	1	0.05		11/07/00
X00423	XG.2000.1252-7	124-48-1	Chlorodibromomethane	ND	mg / Kg	1	0.05		11/07/00
X00423	XG.2000.1252-7	75-00-3	Chloroethane	ND	mg / Kg	1	0.25		11/07/00
X00423	XG.2000.1252-7	67-66-3	Chloroform	ND	mg / Kg	1	0.05		11/07/00
X[illegible]423	XG.2000.1252-7	74-87-3	Chloromethane	ND	mg / Kg	1	0.25		11/07/00
[illegible]23	XG.2000.1252-7	156-59-2	cis-1,2 dichloroethene	ND	mg / Kg	1	0.05		11/07/00

Quality Control Summary

Client: **CH2MHILL**

Project: **0011136** **160660.02.FF.SA**

Explanation of codes

D *Not applicable due to sample dilut*

L *Not applicable due to MDL proxim*

X00423	XG.2000.1252-7	10061-01-5	cis-1,3 dichloropropene	ND	mg / Kg	1	0.05	11/07/0
X00423	XG.2000.1252-7	74-95-3	Dibromomethane	ND	mg / Kg	1	0.05	11/07/0
X00423	XG.2000.1252-7	97-63-2	Ethyl methacrylate	ND	mg / Kg	1	0.25	11/07/0
X00423	XG.2000.1252-7	100-41-4	Ethylbenzene	ND	mg / Kg	1	0.05	11/07/0
X00423	XG.2000.1252-7		Freon 113	ND	mg / Kg	1	0.25	11/07/0
X00423	XG.2000.1252-7	75-71-8	Freon 12	ND	mg / Kg	1	0.5	11/07/0
X00423	XG.2000.1252-7	74-88-4	Iodomethane	ND	mg / Kg	1	0.25	11/07/0
X00423	XG.2000.1252-7	1634-04-4	Methyl t-butyl ether (MTBE)	ND	mg / Kg	1	0.05	11/07/0
X00423	XG.2000.1252-7	75-09-2	Methylene chloride	ND	mg / Kg	1	0.5	11/07/0
X00423	XG.2000.1252-7	91-20-3	Naphthalene	ND	mg / Kg	1	0.25	11/07/0
X00423	XG.2000.1252-7	95-47-6	o-Xylene	ND	mg / Kg	1	0.05	11/07/0
X00423	XG.2000.1252-7	108-38-3/106-42	p/m Xylenes	ND	mg / Kg	1	0.1	11/07/0
X00423	XG.2000.1252-7	100-42-5	Styrene	ND	mg / Kg	1	0.05	11/07/0
X00423	XG.2000.1252-7	156-60-5	t-1,2 Dichloroethene	ND	mg / Kg	1	0.05	11/07/0
X00423	XG.2000.1252-7	10061-02-6	t-1,3 Dichloropropene	ND	mg / Kg	1	0.05	11/07/0
X00423	XG.2000.1252-7	127-18-4	Tetrachloroethene	ND	mg / Kg	1	0.05	11/07/0
X00423	XG.2000.1252-7	108-88-3	Toluene	ND	mg / Kg	1	0.05	11/07/0
X00423	XG.2000.1252-7	79-01-6	Trichloroethene	ND	mg / Kg	1	0.05	11/07/0
X00423	XG.2000.1252-7	75-69-4	Trichlorofluoromethane	ND	mg / Kg	1	0.25	11/07/0
X00423	XG.2000.1252-7	108-05-4	Vinyl acetate	ND	mg / Kg	1	0.25	11/07/0
X00423	XG.2000.1252-7	75-01-4	Vinyl chloride	ND	mg / Kg	1	0.25	11/07/0
X00423-029		**SW846 5030A/8260A Purgeable VOCs by GC/MS**						
X00423	XG.2000.1252-12	75-34-3	1,1 Dichloroethane	ND	mg / Kg	1	0.05	11/08/
X00423	XG.2000.1252-12	75-34-3	1,1 Dichloroethene	ND	mg / Kg	1	0.05	11/08
X00423	XG.2000.1252-12	71-55-6	1,1,1 Trichloroethane	ND	mg / Kg	1	0.05	11/08/0
X00423	XG.2000.1252-12	630-20-6	1,1,1,2 Tetrachloroethane	ND	mg / Kg	1	0.05	11/08/0
X00423	XG.2000.1252-12	79-00-5	1,1,2 Trichloroethane	ND	mg / Kg	1	0.05	11/08/0
X00423	XG.2000.1252-12	79-34-5	1,1,2,2 Tetrachloroethane	ND	mg / Kg	1	0.05	11/08/0
X00423	XG.2000.1252-12	106-93-4	1,2 Dibromoethane (EDB)	ND	mg / Kg	1	0.05	11/08/0
X00423	XG.2000.1252-12	95-50-1	1,2 Dichlorobenzene	ND	mg / Kg	1	0.05	11/08/0
X00423	XG.2000.1252-12	107-06-2	1,2 Dichloroethane	ND	mg / Kg	1	0.05	11/08/0
X00423	XG.2000.1252-12	78-87-5	1,2 Dichloropropane	ND	mg / Kg	1	0.05	11/08/0
X00423	XG.2000.1252-12	96-18-4	1,2,3 Trichloropropane	ND	mg / Kg	1	0.05	11/08/0
X00423	XG.2000.1252-12	95-63-6	1,2,4-Trimethylbenzene	ND	mg / Kg	1	0.05	11/08/0
X00423	XG.2000.1252-12	541-73-1	1,3 Dichlorobenzene	ND	mg / Kg	1	0.05	11/08/0
X00423	XG.2000.1252-12	108-67-8	1,3,5-Trimethylbenzene	ND	mg / Kg	1	0.05	11/08/0
X00423	XG.2000.1252-12	764-41-0	1,4 Dichloro-2-butene	ND	mg / Kg	1	0.5	11/08/0
X00423	XG.2000.1252-12	106-46-7	1,4 Dichlorobenzene	ND	mg / Kg	1	0.05	11/08/0
X00423	XG.2000.1252-12	78-93-3	2-Butanone (MEK)	ND	mg / Kg	1	0.25	11/08/0
X00423	XG.2000.1252-12	110-75-8	2-Chloroethylvinylether	ND	mg / Kg	1	0.25	11/08/0
X00423	XG.2000.1252-12	591-78-6	2-Hexanone (MBK)	ND	mg / Kg	1	0.25	11/08/0
X00423	XG.2000.1252-12	108-10-1	4-Methyl-2-pentanone (MIBK)	ND	mg / Kg	1	0.25	11/08/0
X00423	XG.2000.1252-12	67-64-1	Acetone	ND	mg / Kg	1	0.5	11/08/0
X00423	XG.2000.1252-12	107-02-8	Acrolein	ND	mg / Kg	1	1	11/08/0
X00423	XG.2000.1252-12	107-13-1	Acrylonitrile	ND	mg / Kg	1	1	11/08/0
X00423	XG.2000.1252-12	71-43-2	Benzene	ND	mg / Kg	1	0.05	11/08/0
X00423	XG.2000.1252-12	75-27-4	Bromodichloromethane	ND	mg / Kg	1	0.05	11/08/0
X00423	XG.2000.1252-12	75-25-2	Bromoform	ND	mg / Kg	1	0.05	11/08/0
X00423	XG.2000.1252-12	74-83-9	Bromomethane	ND	mg / Kg	1	0.25	11/08/

Quality Control Summary

Client: **CH2MHILL**

Project: **0011136** **160660.02.FF.SA**

Explanation of codes

D *Not applicable due to sample dilution*

L *Not applicable due to MDL proximity*

X00423	XG.2000.1252-12	75-15-0	Carbon disulfide	ND	mg / Kg	1	0.25	11/08/00
X00423	XG.2000.1252-12	56-23-5	Carbon tetrachloride	ND	mg / Kg	1	0.05	11/08/00
X00423	XG.2000.1252-12	108-90-7	Chlorobenzene	ND	mg / Kg	1	0.05	11/08/00
X00423	XG.2000.1252-12	124-48-1	Chlorodibromomethane	ND	mg / Kg	1	0.05	11/08/00
X00423	XG.2000.1252-12	75-00-3	Chloroethane	ND	mg / Kg	1	0.25	11/08/00
X00423	XG.2000.1252-12	67-66-3	Chloroform	ND	mg / Kg	1	0.05	11/08/00
X00423	XG.2000.1252-12	74-87-3	Chloromethane	ND	mg / Kg	1	0.25	11/08/00
X00423	XG.2000.1252-12	156-59-2	cis-1,2 dichloroethene	ND	mg / Kg	1	0.05	11/08/00
X00423	XG.2000.1252-12	10061-01-5	cis-1,3 dichloropropene	ND	mg / Kg	1	0.05	11/08/00
X00423	XG.2000.1252-12	74-95-3	Dibromomethane	ND	mg / Kg	1	0.05	11/08/00
X00423	XG.2000.1252-12	97-63-2	Ethyl methacrylate	ND	mg / Kg	1	0.25	11/08/00
X00423	XG.2000.1252-12	100-41-4	Ethylbenzene	ND	mg / Kg	1	0.05	11/08/00
X00423	XG.2000.1252-12		Freon 113	ND	mg / Kg	1	0.25	11/08/00
X00423	XG.2000.1252-12	75-71-8	Freon 12	ND	mg / Kg	1	0.5	11/08/00
X00423	XG.2000.1252-12	74-88-4	Iodomethane	ND	mg / Kg	1	0.25	11/08/00
X00423	XG.2000.1252-12	1634-04-4	Methyl t-butyl ether (MTBE)	ND	mg / Kg	1	0.05	11/08/00
X00423	XG.2000.1252-12	75-09-2	Methylene chloride	ND	mg / Kg	1	0.5	11/08/00
X00423	XG.2000.1252-12	91-20-3	Naphthalene	ND	mg / Kg	1	0.25	11/08/00
X00423	XG.2000.1252-12	95-47-6	o-Xylene	ND	mg / Kg	1	0.05	11/08/00
X00423	XG.2000.1252-12	108-38-3/106-42	p/m Xylenes	ND	mg / Kg	1	0.1	11/08/00
X00423	XG.2000.1252-12	100-42-5	Styrene	ND	mg / Kg	1	0.05	11/08/00
X00423	XG.2000.1252-12	156-60-5	t-1,2 Dichloroethene	ND	mg / Kg	1	0.05	11/08/00
X00423	XG.2000.1252-12	10061-02-6	t-1,3 Dichloropropene	ND	mg / Kg	1	0.05	11/08/00
3	XG.2000.1252-12	127-18-4	Tetrachloroethene	ND	mg / Kg	1	0.05	11/08/00
X00423	XG.2000.1252-12	108-88-3	Toluene	ND	mg / Kg	1	0.05	11/08/00
X00423	XG.2000.1252-12	79-01-6	Trichloroethene	ND	mg / Kg	1	0.05	11/08/00
X00423	XG.2000.1252-12	75-69-4	Trichlorofluoromethane	ND	mg / Kg	1	0.25	11/08/00
X00423	XG.2000.1252-12	108-05-4	Vinyl acetate	ND	mg / Kg	1	0.25	11/08/00
X00423	XG.2000.1252-12	75-01-4	Vinyl chloride	ND	mg / Kg	1	0.25	11/08/00

QC Type **MS: Matrix Spike** QC Matrix **WASTE**

QC Group	Run Sequence	CAS #	Analyte	Result	Units	Dilution Factor	Detection Limit	Code	Run Date
X00423-014		**SW846 5030A/8260A Purgeable VOCs by GC/MS**							
X00423	XG.2000.1232-12	75-34-3	1,1 Dichloroethene	113	% Recovery	100	NA		11/02/00
X00423	XG.2000.1252-2	75-34-3	1,1 Dichloroethene	113	% Recovery	100	NA		11/02/00
X00423	XG.2000.1232-12	106-46-7	1,4 Dichlorobenzene	104	% Recovery	100	NA		11/02/00
X00423	XG.2000.1252-2	106-46-7	1,4 Dichlorobenzene	104	% Recovery	100	NA		11/02/00
X00423	XG.2000.1232-12	71-43-2	Benzene	113	% Recovery	100	NA		11/02/00
X00423	XG.2000.1252-2	71-43-2	Benzene	113	% Recovery	100	NA		11/02/00
X00423	XG.2000.1232-12	108-90-7	Chlorobenzene	111	% Recovery	100	NA		11/02/00
X00423	XG.2000.1252-2	108-90-7	Chlorobenzene	111	% Recovery	100	NA		11/02/00
X00423	XG.2000.1232-12	108-88-3	Toluene	116	% Recovery	100	NA		11/02/00
X00423	XG.2000.1252-2	108-88-3	Toluene	116	% Recovery	100	NA		11/02/00
X00423	XG.2000.1232-12	79-01-6	Trichloroethene	112	% Recovery	100	NA		11/02/00
X00423	XG.2000.1252-2	79-01-6	Trichloroethene	112	% Recovery	100	NA		11/02/00

Quality Control Summary

Client: CH2MHILL

Project: 0011136 160660.02.FF.SA

Explanation of codes

D *Not applicable due to sample dilutio*

L *Not applicable due to MDL proxim*

QC Type **MSD: Matrix Spike Duplicate Accuracy** QC Matrix **WASTE**

QC Group	Run Sequence	CAS #	Analyte	Result	Units	Dilution Factor	Detection Limit	Code	Run Date
X00423-015		**SW846 5030A/8260A Purgeable VOCs by GC/MS**							
X00423	XG.2000.1232-13	75-34-3	1,1 Dichloroethene	110	% Recovery	100	NA		11/02/0
X00423	XG.2000.1252-3	75-34-3	1,1 Dichloroethene	110	% Recovery	100	NA		11/02/0
X00423	XG.2000.1232-13	106-46-7	1,4 Dichlorobenzene	102	% Recovery	100	NA		11/02/0
X00423	XG.2000.1252-3	106-46-7	1,4 Dichlorobenzene	102	% Recovery	100	NA		11/02/0
X00423	XG.2000.1232-13	71-43-2	Benzene	110	% Recovery	100	NA		11/02/0
X00423	XG.2000.1252-3	71-43-2	Benzene	110	% Recovery	100	NA		11/02/0
X00423	XG.2000.1232-13	108-90-7	Chlorobenzene	108	% Recovery	100	NA		11/02/0
X00423	XG.2000.1252-3	108-90-7	Chlorobenzene	108	% Recovery	100	NA		11/02/0
X00423	XG.2000.1232-13	108-88-3	Toluene	112	% Recovery	100	NA		11/02/0
X00423	XG.2000.1252-3	108-88-3	Toluene	112	% Recovery	100	NA		11/02/0
X00423	XG.2000.1232-13	79-01-6	Trichloroethene	109	% Recovery	100	NA		11/02/0
X00423	XG.2000.1252-3	79-01-6	Trichloroethene	109	% Recovery	100	NA		11/02/0

QC Type **MSD: Matrix Spike Duplicate Precision** QC Matrix **WASTE**

QC Group	Run Sequence	CAS #	Analyte	Result	Units	Dilution Factor	Detection Limit	Code	Run Date
X00423-015		**SW846 5030A/8260A Purgeable VOCs by GC/MS**							
X00423	XG.2000.1232-13	75-34-3	1,1 Dichloroethene	3	RPD	100	NA		11/02/0
X00423	XG.2000.1252-3	75-34-3	1,1 Dichloroethene	3	RPD	100	NA		11/02/0
X00423	XG.2000.1232-13	106-46-7	1,4 Dichlorobenzene	2	RPD	100	NA		11/02/0
X00423	XG.2000.1252-3	106-46-7	1,4 Dichlorobenzene	2	RPD	100	NA		11/02/0
X00423	XG.2000.1232-13	71-43-2	Benzene	2	RPD	100	NA		11/02/0
X00423	XG.2000.1252-3	71-43-2	Benzene	2	RPD	100	NA		11/02/0
X00423	XG.2000.1232-13	108-90-7	Chlorobenzene	2	RPD	100	NA		11/02/0
X00423	XG.2000.1252-3	108-90-7	Chlorobenzene	2	RPD	100	NA		11/02/0
X00423	XG.2000.1232-13	108-88-3	Toluene	3	RPD	100	NA		11/02/0
X00423	XG.2000.1252-3	108-88-3	Toluene	3	RPD	100	NA		11/02/0
X00423	XG.2000.1232-13	79-01-6	Trichloroethene	2	RPD	100	NA		11/02/0
X00423	XG.2000.1252-3	79-01-6	Trichloroethene	2	RPD	100	NA		11/02/0

Quality Control Summary

Client: **CH2MHILL**

Project: **0011136** **160660.02.FF.SA**

Explanation of codes

D	*Not applicable due to sample dilution*
L	*Not applicable due to MDL proximity*

QC Type **LCS: Lab Control Spike** QC Matrix **WATER**

QC Group	Run Sequence	CAS #	Analyte	Result	Units	Dilution Factor	Detection Limit	Code	Run Date
X00436-003		**SW846 8260A Purgeable VOCs by GC/MS**							
X00436	XG.2000.1263-3	75-34-3	1,1 Dichloroethene	111	% Recovery	1	NA		11/13/00
X00436	XG.2000.1263-3	106-46-7	1,4 Dichlorobenzene	108	% Recovery	1	NA		11/13/00
X00436	XG.2000.1263-3	71-43-2	Benzene	113	% Recovery	1	NA		11/13/00
X00436	XG.2000.1263-3	108-90-7	Chlorobenzene	111	% Recovery	1	NA		11/13/00
X00436	XG.2000.1263-3	108-88-3	Toluene	113	% Recovery	1	NA		11/13/00
X00436	XG.2000.1263-3	79-01-6	Trichloroethene	113	% Recovery	1	NA		11/13/00

QC Type **LCSD: Lab Control Spike Duplicate Accuracy** QC Matrix **WATER**

QC Group	Run Sequence	CAS #	Analyte	Result	Units	Dilution Factor	Detection Limit	Code	Run Date
X00436-004		**SW846 8260A Purgeable VOCs by GC/MS**							
X00436	XG.2000.1263-4	75-34-3	1,1 Dichloroethene	110	% Recovery	1	NA		11/13/00
X00436	XG.2000.1263-4	106-46-7	1,4 Dichlorobenzene	106	% Recovery	1	NA		11/13/00
[illegible]	XG.2000.1263-4	71-43-2	Benzene	113	% Recovery	1	NA		11/13/00
[illegible]	XG.2000.1263-4	108-90-7	Chlorobenzene	111	% Recovery	1	NA		11/13/00
X00436	XG.2000.1263-4	108-88-3	Toluene	114	% Recovery	1	NA		11/13/00
X00436	XG.2000.1263-4	79-01-6	Trichloroethene	113	% Recovery	1	NA		11/13/00

QC Type **LCSD: Lab Control Spike Duplicate Precision** QC Matrix **WATER**

QC Group	Run Sequence	CAS #	Analyte	Result	Units	Dilution Factor	Detection Limit	Code	Run Date
X00436-004		**SW846 8260A Purgeable VOCs by GC/MS**							
X00436	XG.2000.1263-4	75-34-3	1,1 Dichloroethene	1	RPD	1	NA		11/13/00
X00436	XG.2000.1263-4	106-46-7	1,4 Dichlorobenzene	1	RPD	1	NA		11/13/00
X00436	XG.2000.1263-4	71-43-2	Benzene	< 1	RPD	1	NA		11/13/00
X00436	XG.2000.1263-4	108-90-7	Chlorobenzene	< 1	RPD	1	NA		11/13/00
X00436	XG.2000.1263-4	108-88-3	Toluene	< 1	RPD	1	NA		11/13/00
X00436	XG.2000.1263-4	79-01-6	Trichloroethene	< 1	RPD	1	NA		11/13/00

QC Type **MB: Method Blank** QC Matrix **WATER**

QC Group	Run Sequence	CAS #	Analyte	Result	Units	Dilution Factor	Detection Limit	Code	Run Date
X00436-001		**SW846 8260A Purgeable VOCs by GC/MS**							
[illegible]	XG.2000.1263-1	75-34-3	1,1 Dichloroethane	ND	ug / L	1	1		11/13/00
[illegible]	XG.2000.1263-1	75-34-3	1,1 Dichloroethene	ND	ug / L	1	1		11/13/00

Quality Control Summary

Client: **CH2MHILL**

Project: **0011136** **160660.02.FF.SA**

Explanation of codes

D *Not applicable due to sample diluti*

L *Not applicable due to MDL proxim*

X00436	XG.2000.1263-1	71-55-6	1,1,1 Trichloroethane	ND	ug / L	1	1	11/13/00
X00436	XG.2000.1263-1	630-20-6	1,1,1,2 Tetrachloroethane	ND	ug / L	1	1	11/13/00
X00436	XG.2000.1263-1	79-00-5	1,1,2 Trichloroethane	ND	ug / L	1	1	11/13/00
X00436	XG.2000.1263-1	79-34-5	1,1,2,2 Tetrachloroethane	ND	ug / L	1	1	11/13/00
X00436	XG.2000.1263-1	106-93-4	1,2 Dibromoethane (EDB)	ND	ug / L	1	1	11/13/00
X00436	XG.2000.1263-1	95-50-1	1,2 Dichlorobenzene	ND	ug / L	1	1	11/13/00
X00436	XG.2000.1263-1	107-06-2	1,2 Dichloroethane	ND	ug / L	1	1	11/13/00
X00436	XG.2000.1263-1	78-87-5	1,2 Dichloropropane	ND	ug / L	1	1	11/13/00
X00436	XG.2000.1263-1	96-18-4	1,2,3 Trichloropropane	ND	ug / L	1	1	11/13/00
X00436	XG.2000.1263-1	95-63-6	1,2,4-Trimethylbenzene	ND	ug / L	1	1	11/13/00
X00436	XG.2000.1263-1	541-73-1	1,3 Dichlorobenzene	ND	ug / L	1	1	11/13/00
X00436	XG.2000.1263-1	108-67-8	1,3,5-Trimethylbenzene	ND	ug / L	1	1	11/13/00
X00436	XG.2000.1263-1	764-41-0	1,4 Dichloro-2-butene	ND	ug / L	1	10	11/13/00
X00436	XG.2000.1263-1	106-46-7	1,4 Dichlorobenzene	ND	ug / L	1	1	11/13/00
X00436	XG.2000.1263-1	78-93-3	2-Butanone (MEK)	ND	ug / L	1	5	11/13/00
X00436	XG.2000.1263-1	110-75-8	2-Chloroethylvinylether	ND	ug / L	1	5	11/13/00
X00436	XG.2000.1263-1	591-78-6	2-Hexanone (MBK)	ND	ug / L	1	5	11/13/00
X00436	XG.2000.1263-1	108-10-1	4-Methyl-2-pentanone (MIBK)	ND	ug / L	1	5	11/13/00
X00436	XG.2000.1263-1	67-64-1	Acetone	ND	ug / L	1	10	11/13/00
X00436	XG.2000.1263-1	107-02-8	Acrolein	ND	ug / L	1	20	11/13/00
X00436	XG.2000.1263-1	107-13-1	Acrylonitrile	ND	ug / L	1	20	11/13/00
X00436	XG.2000.1263-1	71-43-2	Benzene	ND	ug / L	1	1	11/13/00
X00436	XG.2000.1263-1	75-27-4	Bromodichloromethane	ND	ug / L	1	1	11/13/00
X00436	XG.2000.1263-1	75-25-2	Bromoform	ND	ug / L	1	1	11/13/
X00436	XG.2000.1263-1	74-83-9	Bromomethane	ND	ug / L	1	5	11/13/
X00436	XG.2000.1263-1	75-15-0	Carbon disulfide	ND	ug / L	1	5	11/13/00
X00436	XG.2000.1263-1	56-23-5	Carbon tetrachloride	ND	ug / L	1	1	11/13/00
X00436	XG.2000.1263-1	108-90-7	Chlorobenzene	ND	ug / L	1	1	11/13/00
X00436	XG.2000.1263-1	124-48-1	Chlorodibromomethane	ND	ug / L	1	1	11/13/00
X00436	XG.2000.1263-1	75-00-3	Chloroethane	ND	ug / L	1	5	11/13/00
X00436	XG.2000.1263-1	67-66-3	Chloroform	ND	ug / L	1	1	11/13/00
X00436	XG.2000.1263-1	74-87-3	Chloromethane	ND	ug / L	1	5	11/13/00
X00436	XG.2000.1263-1	156-59-2	cis-1,2 dichloroethene	ND	ug / L	1	1	11/13/00
X00436	XG.2000.1263-1	10061-01-5	cis-1,3 dichloropropene	ND	ug / L	1	1	11/13/00
X00436	XG.2000.1263-1	74-95-3	Dibromomethane	ND	ug / L	1	1	11/13/00
X00436	XG.2000.1263-1	97-63-2	Ethyl methacrylate	ND	ug / L	1	5	11/13/00
X00436	XG.2000.1263-1	100-41-4	Ethylbenzene	ND	ug / L	1	1	11/13/00
X00436	XG.2000.1263-1		Freon 113	ND	ug / L	1	5	11/13/00
X00436	XG.2000.1263-1	75-71-8	Freon 12	ND	ug / L	1	10	11/13/00
X00436	XG.2000.1263-1	74-88-4	Iodomethane	ND	ug / L	1	5	11/13/00
X00436	XG.2000.1263-1	1634-04-4	Methyl t-butyl ether (MTBE)	ND	ug / L	1	1	11/13/00
X00436	XG.2000.1263-1	75-09-2	Methylene chloride	ND	ug / L	1	10	11/13/00
X00436	XG.2000.1263-1	91-20-3	Naphthalene	ND	ug / L	1	5	11/13/00
X00436	XG.2000.1263-1	95-47-6	o-Xylene	ND	ug / L	1	1	11/13/00
X00436	XG.2000.1263-1	108-38-3/106-42	p/m Xylenes	ND	ug / L	1	2	11/13/00
X00436	XG.2000.1263-1	100-42-5	Styrene	ND	ug / L	1	1	11/13/00
X00436	XG.2000.1263-1	156-60-5	t-1,2 Dichloroethene	ND	ug / L	1	1	11/13/00
X00436	XG.2000.1263-1	10061-02-6	t-1,3 Dichloropropene	ND	ug / L	1	1	11/13/00
X00436	XG.2000.1263-1	127-18-4	Tetrachloroethene	ND	ug / L	1	1	11/13/0
X00436	XG.2000.1263-1	108-88-3	Toluene	ND	ug / L	1	1	11/13/

Quality Control Summary

Explanation of codes

D *Not applicable due to sample dilution*
L *Not applicable due to MDL proximity*

Client: **CH2MHILL**
Project: **0011136 160660.02.FF.SA**

X00436	XG.2000.1263-1	79-01-6	Trichloroethene	ND	ug / L	1	1	11/13/00
X00436	XG.2000.1263-1	75-69-4	Trichlorofluoromethane	ND	ug / L	1	5	11/13/00
X00436	XG.2000.1263-1	108-05-4	Vinyl acetate	ND	ug / L	1	5	11/13/00
X00436	XG.2000.1263-1	75-01-4	Vinyl chloride	ND	ug / L	1	5	11/13/00
X00436-015		**SW846 8260A Purgeable VOCs by GC/MS**						
X00436	XG.2000.1274-1	75-34-3	1,1 Dichloroethane	ND	ug / L	1	1	11/14/00
X00436	XG.2000.1274-1	75-34-3	1,1 Dichloroethene	ND	ug / L	1	1	11/14/00
X00436	XG.2000.1274-1	71-55-6	1,1,1 Trichloroethane	ND	ug / L	1	1	11/14/00
X00436	XG.2000.1274-1	630-20-6	1,1,1,2 Tetrachloroethane	ND	ug / L	1	1	11/14/00
X00436	XG.2000.1274-1	79-00-5	1,1,2 Trichloroethane	ND	ug / L	1	1	11/14/00
X00436	XG.2000.1274-1	79-34-5	1,1,2,2 Tetrachloroethane	ND	ug / L	1	1	11/14/00
X00436	XG.2000.1274-1	106-93-4	1,2 Dibromoethane (EDB)	ND	ug / L	1	1	11/14/00
X00436	XG.2000.1274-1	95-50-1	1,2 Dichlorobenzene	ND	ug / L	1	1	11/14/00
X00436	XG.2000.1274-1	107-06-2	1,2 Dichloroethane	ND	ug / L	1	1	11/14/00
X00436	XG.2000.1274-1	78-87-5	1,2 Dichloropropane	ND	ug / L	1	1	11/14/00
X00436	XG.2000.1274-1	96-18-4	1,2,3 Trichloropropane	ND	ug / L	1	1	11/14/00
X00436	XG.2000.1274-1	95-63-6	1,2,4-Trimethylbenzene	ND	ug / L	1	1	11/14/00
X00436	XG.2000.1274-1	541-73-1	1,3 Dichlorobenzene	ND	ug / L	1	1	11/14/00
X00436	XG.2000.1274-1	108-67-8	1,3,5-Trimethylbenzene	ND	ug / L	1	1	11/14/00
X00436	XG.2000.1274-1	764-41-0	1,4 Dichloro-2-butene	ND	ug / L	1	10	11/14/00
X00436	XG.2000.1274-1	106-46-7	1,4 Dichlorobenzene	ND	ug / L	1	1	11/14/00
X00436	XG.2000.1274-1	78-93-3	2-Butanone (MEK)	ND	ug / L	1	5	11/14/00
X00436	XG.2000.1274-1	110-75-8	2-Chloroethylvinylether	ND	ug / L	1	5	11/14/00
[illegible]	XG.2000.1274-1	591-78-6	2-Hexanone (MBK)	ND	ug / L	1	5	11/14/00
X00436	XG.2000.1274-1	108-10-1	4-Methyl-2-pentanone (MIBK)	ND	ug / L	1	5	11/14/00
X00436	XG.2000.1274-1	67-64-1	Acetone	ND	ug / L	1	10	11/14/00
X00436	XG.2000.1274-1	107-02-8	Acrolein	ND	ug / L	1	20	11/14/00
X00436	XG.2000.1274-1	107-13-1	Acrylonitrile	ND	ug / L	1	20	11/14/00
X00436	XG.2000.1274-1	71-43-2	Benzene	ND	ug / L	1	1	11/14/00
X00436	XG.2000.1274-1	75-27-4	Bromodichloromethane	ND	ug / L	1	1	11/14/00
X00436	XG.2000.1274-1	75-25-2	Bromoform	ND	ug / L	1	1	11/14/00
X00436	XG.2000.1274-1	74-83-9	Bromomethane	ND	ug / L	1	5	11/14/00
X00436	XG.2000.1274-1	75-15-0	Carbon disulfide	ND	ug / L	1	5	11/14/00
X00436	XG.2000.1274-1	56-23-5	Carbon tetrachloride	ND	ug / L	1	1	11/14/00
X00436	XG.2000.1274-1	108-90-7	Chlorobenzene	ND	ug / L	1	1	11/14/00
X00436	XG.2000.1274-1	124-48-1	Chlorodibromomethane	ND	ug / L	1	1	11/14/00
X00436	XG.2000.1274-1	75-00-3	Chloroethane	ND	ug / L	1	5	11/14/00
X00436	XG.2000.1274-1	67-66-3	Chloroform	ND	ug / L	1	1	11/14/00
X00436	XG.2000.1274-1	74-87-3	Chloromethane	ND	ug / L	1	5	11/14/00
X00436	XG.2000.1274-1	156-59-2	cis-1,2 dichloroethene	ND	ug / L	1	1	11/14/00
X00436	XG.2000.1274-1	10061-01-5	cis-1,3 dichloropropene	ND	ug / L	1	1	11/14/00
X00436	XG.2000.1274-1	74-95-3	Dibromomethane	ND	ug / L	1	1	11/14/00
X00436	XG.2000.1274-1	97-63-2	Ethyl methacrylate	ND	ug / L	1	5	11/14/00
X00436	XG.2000.1274-1	100-41-4	Ethylbenzene	ND	ug / L	1	1	11/14/00
X00436	XG.2000.1274-1		Freon 113	ND	ug / L	1	5	11/14/00
X00436	XG.2000.1274-1	75-71-8	Freon 12	ND	ug / L	1	10	11/14/00
X00436	XG.2000.1274-1	74-88-4	Iodomethane	ND	ug / L	1	5	11/14/00
X00436	XG.2000.1274-1	1634-04-4	Methyl t-butyl ether (MTBE)	ND	ug / L	1	1	11/14/00
[illegible]	XG.2000.1274-1	75-09-2	Methylene chloride	ND	ug / L	1	10	11/14/00
[illegible]	XG.2000.1274-1	91-20-3	Naphthalene	ND	ug / L	1	5	11/14/00

Quality Control Summary

Client: **CH2MHILL**

Project: **0011136** **160660.02.FF.SA**

Explanation of codes

D *Not applicable due to sample dilut*

L *Not applicable due to MDL proxim.*

X00436	XG.2000.1274-1	95-47-6	o-Xylene	ND	ug / L	1	1	11/14/00
X00436	XG.2000.1274-1	108-38-3/106-42	p/m Xylenes	ND	ug / L	1	2	11/14/00
X00436	XG.2000.1274-1	100-42-5	Styrene	ND	ug / L	1	1	11/14/00
X00436	XG.2000.1274-1	156-60-5	t-1,2 Dichloroethene	ND	ug / L	1	1	11/14/00
X00436	XG.2000.1274-1	10061-02-6	t-1,3 Dichloropropene	ND	ug / L	1	1	11/14/00
X00436	XG.2000.1274-1	127-18-4	Tetrachloroethene	ND	ug / L	1	1	11/14/00
X00436	XG.2000.1274-1	108-88-3	Toluene	ND	ug / L	1	1	11/14/00
X00436	XG.2000.1274-1	79-01-6	Trichloroethene	ND	ug / L	1	1	11/14/00
X00436	XG.2000.1274-1	75-69-4	Trichlorofluoromethane	ND	ug / L	1	5	11/14/00
X00436	XG.2000.1274-1	108-05-4	Vinyl acetate	ND	ug / L	1	5	11/14/00
X00436	XG.2000.1274-1	75-01-4	Vinyl chloride	ND	ug / L	1	5	11/14/00
X00436-018		**SW846 8260A Purgeable VOCs by GC/MS**						
X00436	XG.2000.1274-4	75-34-3	1,1 Dichloroethane	ND	ug / L	1	1	11/15/00
X00436	XG.2000.1274-4	75-34-3	1,1 Dichloroethene	ND	ug / L	1	1	11/15/00
X00436	XG.2000.1274-4	71-55-6	1,1,1 Trichloroethane	ND	ug / L	1	1	11/15/00
X00436	XG.2000.1274-4	630-20-6	1,1,1,2 Tetrachloroethane	ND	ug / L	1	1	11/15/00
X00436	XG.2000.1274-4	79-00-5	1,1,2 Trichloroethane	ND	ug / L	1	1	11/15/00
X00436	XG.2000.1274-4	79-34-5	1,1,2,2 Tetrachloroethane	ND	ug / L	1	1	11/15/00
X00436	XG.2000.1274-4	106-93-4	1,2 Dibromoethane (EDB)	ND	ug / L	1	1	11/15/00
X00436	XG.2000.1274-4	95-50-1	1,2 Dichlorobenzene	ND	ug / L	1	1	11/15/00
X00436	XG.2000.1274-4	107-06-2	1,2 Dichloroethane	ND	ug / L	1	1	11/15/00
X00436	XG.2000.1274-4	78-87-5	1,2 Dichloropropane	ND	ug / L	1	1	11/15/00
X00436	XG.2000.1274-4	96-18-4	1,2,3 Trichloropropane	ND	ug / L	1	1	11/15/
X00436	XG.2000.1274-4	95-63-6	1,2,4-Trimethylbenzene	ND	ug / L	1	1	11/15/
X00436	XG.2000.1274-4	541-73-1	1,3 Dichlorobenzene	ND	ug / L	1	1	11/15/00
X00436	XG.2000.1274-4	108-67-8	1,3,5-Trimethylbenzene	ND	ug / L	1	1	11/15/00
X00436	XG.2000.1274-4	764-41-0	1,4 Dichloro-2-butene	ND	ug / L	1	10	11/15/00
X00436	XG.2000.1274-4	106-46-7	1,4 Dichlorobenzene	ND	ug / L	1	1	11/15/00
X00436	XG.2000.1274-4	78-93-3	2-Butanone (MEK)	ND	ug / L	1	5	11/15/00
X00436	XG.2000.1274-4	110-75-8	2-Chloroethylvinylether	ND	ug / L	1	5	11/15/00
X00436	XG.2000.1274-4	591-78-6	2-Hexanone (MBK)	ND	ug / L	1	5	11/15/00
X00436	XG.2000.1274-4	108-10-1	4-Methyl-2-pentanone (MIBK)	ND	ug / L	1	5	11/15/00
X00436	XG.2000.1274-4	67-64-1	Acetone	ND	ug / L	1	10	11/15/00
X00436	XG.2000.1274-4	107-02-8	Acrolein	ND	ug / L	1	20	11/15/00
X00436	XG.2000.1274-4	107-13-1	Acrylonitrile	ND	ug / L	1	20	11/15/00
X00436	XG.2000.1274-4	71-43-2	Benzene	ND	ug / L	1	1	11/15/00
X00436	XG.2000.1274-4	75-27-4	Bromodichloromethane	ND	ug / L	1	1	11/15/00
X00436	XG.2000.1274-4	75-25-2	Bromoform	ND	ug / L	1	1	11/15/00
X00436	XG.2000.1274-4	74-83-9	Bromomethane	ND	ug / L	1	5	11/15/00
X00436	XG.2000.1274-4	75-15-0	Carbon disulfide	ND	ug / L	1	5	11/15/00
X00436	XG.2000.1274-4	56-23-5	Carbon tetrachloride	ND	ug / L	1	1	11/15/00
X00436	XG.2000.1274-4	108-90-7	Chlorobenzene	ND	ug / L	1	1	11/15/00
X00436	XG.2000.1274-4	124-48-1	Chlorodibromomethane	ND	ug / L	1	1	11/15/00
X00436	XG.2000.1274-4	75-00-3	Chloroethane	ND	ug / L	1	5	11/15/00
X00436	XG.2000.1274-4	67-66-3	Chloroform	ND	ug / L	1	1	11/15/00
X00436	XG.2000.1274-4	74-87-3	Chloromethane	ND	ug / L	1	5	11/15/00
X00436	XG.2000.1274-4	156-59-2	cis-1,2 dichloroethene	ND	ug / L	1	1	11/15/00
X00436	XG.2000.1274-4	10061-01-5	cis-1,3 dichloropropene	ND	ug / L	1	1	11/15/00
X00436	XG.2000.1274-4	74-95-3	Dibromomethane	ND	ug / L	1	1	11/15/

Quality Control Summary

Explanation of codes

D *Not applicable due to sample dilution*
L *Not applicable due to MDL proximity*

Client: **CH2MHILL**
Project: **0011136 160660.02.FF.SA**

X00436	XG.2000.1274-4	97-63-2	Ethyl methacrylate	ND	ug / L	1	5	11/15/00
X00436	XG.2000.1274-4	100-41-4	Ethylbenzene	ND	ug / L	1	1	11/15/00
X00436	XG.2000.1274-4		Freon 113	ND	ug / L	1	5	11/15/00
X00436	XG.2000.1274-4	75-71-8	Freon 12	ND	ug / L	1	10	11/15/00
X00436	XG.2000.1274-4	74-88-4	Iodomethane	ND	ug / L	1	5	11/15/00
X00436	XG.2000.1274-4	1634-04-4	Methyl t-butyl ether (MTBE)	ND	ug / L	1	1	11/15/00
X00436	XG.2000.1274-4	75-09-2	Methylene chloride	ND	ug / L	1	10	11/15/00
X00436	XG.2000.1274-4	91-20-3	Naphthalene	ND	ug / L	1	5	11/15/00
X00436	XG.2000.1274-4	95-47-6	o-Xylene	ND	ug / L	1	1	11/15/00
X00436	XG.2000.1274-4	108-38-3/106-42	p/m Xylenes	ND	ug / L	1	2	11/15/00
X00436	XG.2000.1274-4	100-42-5	Styrene	ND	ug / L	1	1	11/15/00
X00436	XG.2000.1274-4	156-60-5	t-1,2 Dichloroethene	ND	ug / L	1	1	11/15/00
X00436	XG.2000.1274-4	10061-02-6	t-1,3 Dichloropropene	ND	ug / L	1	1	11/15/00
X00436	XG.2000.1274-4	127-18-4	Tetrachloroethene	ND	ug / L	1	1	11/15/00
X00436	XG.2000.1274-4	108-88-3	Toluene	ND	ug / L	1	1	11/15/00
X00436	XG.2000.1274-4	79-01-6	Trichloroethene	ND	ug / L	1	1	11/15/00
X00436	XG.2000.1274-4	75-69-4	Trichlorofluoromethane	ND	ug / L	1	5	11/15/00
X00436	XG.2000.1274-4	108-05-4	Vinyl acetate	ND	ug / L	1	5	11/15/00
X00436	XG.2000.1274-4	75-01-4	Vinyl chloride	ND	ug / L	1	5	11/15/00
X00436-029		**SW846 8260A Purgeable VOCs by GC/MS**						
X00436	XG.2000.1298-1	75-34-3	1,1 Dichloroethane	ND	ug / L	1	1	11/17/00
X00436	XG.2000.1298-1	75-34-3	1,1 Dichloroethene	ND	ug / L	1	1	11/17/00
[illegible]5	XG.2000.1298-1	71-55-6	1,1,1 Trichloroethane	ND	ug / L	1	1	11/17/00
[illegible]6	XG.2000.1298-1	630-20-6	1,1,1,2 Tetrachloroethane	ND	ug / L	1	1	11/17/00
X00436	XG.2000.1298-1	79-00-5	1,1,2 Trichloroethane	ND	ug / L	1	1	11/17/00
X00436	XG.2000.1298-1	79-34-5	1,1,2,2 Tetrachloroethane	ND	ug / L	1	1	11/17/00
X00436	XG.2000.1298-1	106-93-4	1,2 Dibromoethane (EDB)	ND	ug / L	1	1	11/17/00
X00436	XG.2000.1298-1	95-50-1	1,2 Dichlorobenzene	ND	ug / L	1	1	11/17/00
X00436	XG.2000.1298-1	107-06-2	1,2 Dichloroethane	ND	ug / L	1	1	11/17/00
X00436	XG.2000.1298-1	78-87-5	1,2 Dichloropropane	ND	ug / L	1	1	11/17/00
X00436	XG.2000.1298-1	96-18-4	1,2,3 Trichloropropane	ND	ug / L	1	1	11/17/00
X00436	XG.2000.1298-1	95-63-6	1,2,4-Trimethylbenzene	ND	ug / L	1	1	11/17/00
X00436	XG.2000.1298-1	541-73-1	1,3 Dichlorobenzene	ND	ug / L	1	1	11/17/00
X00436	XG.2000.1298-1	108-67-8	1,3,5-Trimethylbenzene	ND	ug / L	1	1	11/17/00
X00436	XG.2000.1298-1	764-41-0	1,4 Dichloro-2-butene	ND	ug / L	1	10	11/17/00
X00436	XG.2000.1298-1	106-46-7	1,4 Dichlorobenzene	ND	ug / L	1	1	11/17/00
X00436	XG.2000.1298-1	78-93-3	2-Butanone (MEK)	ND	ug / L	1	5	11/17/00
X00436	XG.2000.1298-1	110-75-8	2-Chloroethylvinylether	ND	ug / L	1	5	11/17/00
X00436	XG.2000.1298-1	591-78-6	2-Hexanone (MBK)	ND	ug / L	1	5	11/17/00
X00436	XG.2000.1298-1	108-10-1	4-Methyl-2-pentanone (MIBK)	ND	ug / L	1	5	11/17/00
X00436	XG.2000.1298-1	67-64-1	Acetone	ND	ug / L	1	10	11/17/00
X00436	XG.2000.1298-1	107-02-8	Acrolein	ND	ug / L	1	20	11/17/00
X00436	XG.2000.1298-1	107-13-1	Acrylonitrile	ND	ug / L	1	20	11/17/00
X00436	XG.2000.1298-1	71-43-2	Benzene	ND	ug / L	1	1	11/17/00
X00436	XG.2000.1298-1	75-27-4	Bromodichloromethane	ND	ug / L	1	1	11/17/00
X00436	XG.2000.1298-1	75-25-2	Bromoform	ND	ug / L	1	1	11/17/00
X00436	XG.2000.1298-1	74-83-9	Bromomethane	ND	ug / L	1	5	11/17/00
X00436	XG.2000.1298-1	75-15-0	Carbon disulfide	ND	ug / L	1	5	11/17/00
[illegible]6	XG.2000.1298-1	56-23-5	Carbon tetrachloride	ND	ug / L	1	1	11/17/00

Quality Control Summary

Client: **CH2MHILL**

Project: **0011136** **160660.02.FF.SA**

Explanation of codes

D *Not applicable due to sample dilut*

L *Not applicable due to MDL proxim*

X00436	XG.2000.1298-1	108-90-7	Chlorobenzene	ND	ug / L	1	1	11/17/0
X00436	XG.2000.1298-1	124-48-1	Chlorodibromomethane	ND	ug / L	1	1	11/17/0
X00436	XG.2000.1298-1	75-00-3	Chloroethane	ND	ug / L	1	5	11/17/0
X00436	XG.2000.1298-1	67-66-3	Chloroform	ND	ug / L	1	1	11/17/0
X00436	XG.2000.1298-1	74-87-3	Chloromethane	ND	ug / L	1	5	11/17/0
X00436	XG.2000.1298-1	156-59-2	cis-1,2 dichloroethene	ND	ug / L	1	1	11/17/0
X00436	XG.2000.1298-1	10061-01-5	cis-1,3 dichloropropene	ND	ug / L	1	1	11/17/0
X00436	XG.2000.1298-1	74-95-3	Dibromomethane	ND	ug / L	1	1	11/17/0
X00436	XG.2000.1298-1	97-63-2	Ethyl methacrylate	ND	ug / L	1	5	11/17/0
X00436	XG.2000.1298-1	100-41-4	Ethylbenzene	ND	ug / L	1	1	11/17/0
X00436	XG.2000.1298-1		Freon 113	ND	ug / L	1	5	11/17/0
X00436	XG.2000.1298-1	75-71-8	Freon 12	ND	ug / L	1	10	11/17/0
X00436	XG.2000.1298-1	74-88-4	Iodomethane	ND	ug / L	1	5	11/17/0
X00436	XG.2000.1298-1	1634-04-4	Methyl t-butyl ether (MTBE)	ND	ug / L	1	1	11/17/0
X00436	XG.2000.1298-1	75-09-2	Methylene chloride	ND	ug / L	1	10	11/17/0
X00436	XG.2000.1298-1	91-20-3	Naphthalene	ND	ug / L	1	5	11/17/0
X00436	XG.2000.1298-1	95-47-6	o-Xylene	ND	ug / L	1	1	11/17/0
X00436	XG.2000.1298-1	108-38-3/106-42	p/m Xylenes	ND	ug / L	1	2	11/17/0
X00436	XG.2000.1298-1	100-42-5	Styrene	ND	ug / L	1	1	11/17/0
X00436	XG.2000.1298-1	156-60-5	t-1,2 Dichloroethene	ND	ug / L	1	1	11/17/0
X00436	XG.2000.1298-1	10061-02-6	t-1,3 Dichloropropene	ND	ug / L	1	1	11/17/0
X00436	XG.2000.1298-1	127-18-4	Tetrachloroethene	ND	ug / L	1	1	11/17/0
X00436	XG.2000.1298-1	108-88-3	Toluene	ND	ug / L	1	1	11/17/0
X00436	XG.2000.1298-1	79-01-6	Trichloroethene	ND	ug / L	1	1	11/17
X00436	XG.2000.1298-1	75-69-4	Trichlorofluoromethane	ND	ug / L	1	5	11/17/0
X00436	XG.2000.1298-1	108-05-4	Vinyl acetate	ND	ug / L	1	5	11/17/0
X00436	XG.2000.1298-1	75-01-4	Vinyl chloride	ND	ug / L	1	5	11/17/0
X00436-032		**SW846 8260A Purgeable VOCs by GC/MS**						
X00436	XG.2000.1298-3	75-34-3	1,1 Dichloroethane	ND	ug / L	1	1	11/20/0
X00436	XG.2000.1298-3	75-34-3	1,1 Dichloroethene	ND	ug / L	1	1	11/20/0
X00436	XG.2000.1298-3	71-55-6	1,1,1 Trichloroethane	ND	ug / L	1	1	11/20/0
X00436	XG.2000.1298-3	630-20-6	1,1,1,2 Tetrachloroethane	ND	ug / L	1	1	11/20/0
X00436	XG.2000.1298-3	79-00-5	1,1,2 Trichloroethane	ND	ug / L	1	1	11/20/0
X00436	XG.2000.1298-3	79-34-5	1,1,2,2 Tetrachloroethane	ND	ug / L	1	1	11/20/0
X00436	XG.2000.1298-3	106-93-4	1,2 Dibromoethane (EDB)	ND	ug / L	1	1	11/20/0
X00436	XG.2000.1298-3	95-50-1	1,2 Dichlorobenzene	ND	ug / L	1	1	11/20/0
X00436	XG.2000.1298-3	107-06-2	1,2 Dichloroethane	ND	ug / L	1	1	11/20/0
X00436	XG.2000.1298-3	78-87-5	1,2 Dichloropropane	ND	ug / L	1	1	11/20/00
X00436	XG.2000.1298-3	96-18-4	1,2,3 Trichloropropane	ND	ug / L	1	1	11/20/00
X00436	XG.2000.1298-3	95-63-6	1,2,4-Trimethylbenzene	ND	ug / L	1	1	11/20/00
X00436	XG.2000.1298-3	541-73-1	1,3 Dichlorobenzene	ND	ug / L	1	1	11/20/00
X00436	XG.2000.1298-3	108-67-8	1,3,5-Trimethylbenzene	ND	ug / L	1	1	11/20/00
X00436	XG.2000.1298-3	764-41-0	1,4 Dichloro-2-butene	ND	ug / L	1	10	11/20/00
X00436	XG.2000.1298-3	106-46-7	1,4 Dichlorobenzene	ND	ug / L	1	1	11/20/00
X00436	XG.2000.1298-3	78-93-3	2-Butanone (MEK)	ND	ug / L	1	5	11/20/00
X00436	XG.2000.1298-3	110-75-8	2-Chloroethylvinylether	ND	ug / L	1	5	11/20/00
X00436	XG.2000.1298-3	591-78-6	2-Hexanone (MBK)	ND	ug / L	1	5	11/20/00
X00436	XG.2000.1298-3	108-10-1	4-Methyl-2-pentanone (MIBK)	ND	ug / L	1	5	11/20/00
X00436	XG.2000.1298-3	67-64-1	Acetone	ND	ug / L	1	10	11/20

Quality Control Summary

Explanation of codes

D	*Not applicable due to sample dilution*
L	*Not applicable due to MDL proximity*

Client: **CH2MHILL**

Project: **0011136** **160660.02.FF.SA**

X00436	XG.2000.1298-3	107-02-8	Acrolein	ND	ug / L	1	20	11/20/00
X00436	XG.2000.1298-3	107-13-1	Acrylonitrile	ND	ug / L	1	20	11/20/00
X00436	XG.2000.1298-3	71-43-2	Benzene	ND	ug / L	1	1	11/20/00
X00436	XG.2000.1298-3	75-27-4	Bromodichloromethane	ND	ug / L	1	1	11/20/00
X00436	XG.2000.1298-3	75-25-2	Bromoform	ND	ug / L	1	1	11/20/00
X00436	XG.2000.1298-3	74-83-9	Bromomethane	ND	ug / L	1	5	11/20/00
X00436	XG.2000.1298-3	75-15-0	Carbon disulfide	ND	ug / L	1	5	11/20/00
X00436	XG.2000.1298-3	56-23-5	Carbon tetrachloride	ND	ug / L	1	1	11/20/00
X00436	XG.2000.1298-3	108-90-7	Chlorobenzene	ND	ug / L	1	1	11/20/00
X00436	XG.2000.1298-3	124-48-1	Chlorodibromomethane	ND	ug / L	1	1	11/20/00
X00436	XG.2000.1298-3	75-00-3	Chloroethane	ND	ug / L	1	5	11/20/00
X00436	XG.2000.1298-3	67-66-3	Chloroform	ND	ug / L	1	1	11/20/00
X00436	XG.2000.1298-3	74-87-3	Chloromethane	ND	ug / L	1	5	11/20/00
X00436	XG.2000.1298-3	156-59-2	cis-1,2 dichloroethene	ND	ug / L	1	1	11/20/00
X00436	XG.2000.1298-3	10061-01-5	cis-1,3 dichloropropene	ND	ug / L	1	1	11/20/00
X00436	XG.2000.1298-3	74-95-3	Dibromomethane	ND	ug / L	1	1	11/20/00
X00436	XG.2000.1298-3	97-63-2	Ethyl methacrylate	ND	ug / L	1	5	11/20/00
X00436	XG.2000.1298-3	100-41-4	Ethylbenzene	ND	ug / L	1	1	11/20/00
X00436	XG.2000.1298-3		Freon 113	ND	ug / L	1	5	11/20/00
X00436	XG.2000.1298-3	75-71-8	Freon 12	ND	ug / L	1	10	11/20/00
X00436	XG.2000.1298-3	74-88-4	Iodomethane	ND	ug / L	1	5	11/20/00
X00436	XG.2000.1298-3	1634-04-4	Methyl t-butyl ether (MTBE)	ND	ug / L	1	1	11/20/00
X00436	XG.2000.1298-3	75-09-2	Methylene chloride	ND	ug / L	1	10	11/20/00
X00436	XG.2000.1298-3	91-20-3	Naphthalene	ND	ug / L	1	5	11/20/00
X00436	XG.2000.1298-3	95-47-6	o-Xylene	ND	ug / L	1	1	11/20/00
X00436	XG.2000.1298-3	108-38-3/106-42	p/m Xylenes	ND	ug / L	1	2	11/20/00
X00436	XG.2000.1298-3	100-42-5	Styrene	ND	ug / L	1	1	11/20/00
X00436	XG.2000.1298-3	156-60-5	t-1,2 Dichloroethene	ND	ug / L	1	1	11/20/00
X00436	XG.2000.1298-3	10061-02-6	t-1,3 Dichloropropene	ND	ug / L	1	1	11/20/00
X00436	XG.2000.1298-3	127-18-4	Tetrachloroethene	ND	ug / L	1	1	11/20/00
X00436	XG.2000.1298-3	108-88-3	Toluene	ND	ug / L	1	1	11/20/00
X00436	XG.2000.1298-3	79-01-6	Trichloroethene	ND	ug / L	1	1	11/20/00
X00436	XG.2000.1298-3	75-69-4	Trichlorofluoromethane	ND	ug / L	1	5	11/20/00
X00436	XG.2000.1298-3	108-05-4	Vinyl acetate	ND	ug / L	1	5	11/20/00
X00436	XG.2000.1298-3	75-01-4	Vinyl chloride	ND	ug / L	1	5	11/20/00

QC Type **MS: Matrix Spike** QC Matrix **WATER**

QC Group	Run Sequence	CAS #	Analyte	Result	Units	Dilution Factor	Detection Limit	Code	Run Date
X00436-013		**SW846 8260A Purgeable VOCs by GC/MS**							
X00436	XG.2000.1263-5	75-34-3	1,1 Dichloroethene	112	% Recovery	1	NA		11/13/00
X00436	XG.2000.1263-5	106-46-7	1,4 Dichlorobenzene	108	% Recovery	1	NA		11/13/00
X00436	XG.2000.1263-5	71-43-2	Benzene	113	% Recovery	1	NA		11/13/00
X00436	XG.2000.1263-5	108-90-7	Chlorobenzene	112	% Recovery	1	NA		11/13/00
X00436	XG.2000.1263-5	108-88-3	Toluene	116	% Recovery	1	NA		11/13/00
X00436	XG.2000.1263-5	79-01-6	Trichloroethene	113	% Recovery	1	NA		11/13/00

Quality Control Summary

Client: **CH2MHILL**

Project: **0011136** **160660.02.FF.SA**

Explanation of codes

D *Not applicable due to sample dilutior*

L *Not applicable due to MDL proxim*

QC Type **MSD: Matrix Spike Duplicate Accuracy** QC Matrix **WATER**

QC Group	Run Sequence	CAS #	Analyte	Result	Units	Dilution Factor	Detection Limit	Code	Run Date
X00436-014		**SW846 8260A Purgeable VOCs by GC/MS**							
X00436	XG.2000.1263-6	75-34-3	1,1 Dichloroethene	106	% Recovery	1	NA		11/13/00
X00436	XG.2000.1263-6	106-46-7	1,4 Dichlorobenzene	100	% Recovery	1	NA		11/13/00
X00436	XG.2000.1263-6	71-43-2	Benzene	110	% Recovery	1	NA		11/13/00
X00436	XG.2000.1263-6	108-90-7	Chlorobenzene	107	% Recovery	1	NA		11/13/00
X00436	XG.2000.1263-6	108-88-3	Toluene	109	% Recovery	1	NA		11/13/00
X00436	XG.2000.1263-6	79-01-6	Trichloroethene	108	% Recovery	1	NA		11/13/00

QC Type **MSD: Matrix Spike Duplicate Precision** QC Matrix **WATER**

QC Group	Run Sequence	CAS #	Analyte	Result	Units	Dilution Factor	Detection Limit	Code	Run Date
X00436-014		**SW846 8260A Purgeable VOCs by GC/MS**							
X00436	XG.2000.1263-6	75-34-3	1,1 Dichloroethene	6	RPD	1	NA		11/13/00
X00436	XG.2000.1263-6	106-46-7	1,4 Dichlorobenzene	8	RPD	1	NA		11/13/00
X00436	XG.2000.1263-6	71-43-2	Benzene	3	RPD	1	NA		11/13/00
X00436	XG.2000.1263-6	108-90-7	Chlorobenzene	5	RPD	1	NA		11/13/
X00436	XG.2000.1263-6	108-88-3	Toluene	6	RPD	1	NA		11/13/00
X00436	XG.2000.1263-6	79-01-6	Trichloroethene	5	RPD	1	NA		11/13/00

Assaigai Analytical Laboratories, Inc.

Surrogate Summary: QC

Client: **CH2MHILL**

Project: **0011136** **160660.02.FF.SA**

QC Type **LCS** QC Matrix **SOLID**

QC Group	Run Sequence	CAS #	Analyte	Result	Units	Dilution Factor	Detection Limit	Code	Run Date
X00423-007		8260							
X00423	XG.2000.1232-6	NA	1,2 Dichloroethane-D4 (SS)	90	% Recovery	1	NA		10/31/00
X00423	XG.2000.1233-2	NA	1,2 Dichloroethane-D4 (SS)	90	% Recovery	1	NA		10/31/00
X00423	XG.2000.1232-6	NA	4-Bromofluorobenzene (SS)	97	% Recovery	1	NA		10/31/00
X00423	XG.2000.1233-2	NA	4-Bromofluorobenzene (SS)	97	% Recovery	1	NA		10/31/00
X00423	XG.2000.1232-6	NA	Dibromofluoromethane (SS)	101	% Recovery	1	NA		10/31/00
X00423	XG.2000.1233-2	NA	Dibromofluoromethane (SS)	101	% Recovery	1	NA		10/31/00
X00423	XG.2000.1232-6	NA	Toluene-D8 (SS)	102	% Recovery	1	NA		10/31/00
X00423	XG.2000.1233-2	NA	Toluene-D8 (SS)	102	% Recovery	1	NA		10/31/00
X00441-002		DRO							
X00441	XG.2000.1276-2	NA	O-terphenyl	81	% Recovery	1	NA		11/16/00
X00443-002		GRO							
X00443	XG.2000.1275-2	NA	4-Bromofluorobenzene-FID	102	% Recovery	1	NA		11/16/00
X00443	XG.2000.1275-2	NA	4-Bromofluorobenzene-PID	ND	% Recovery	1	NA		11/16/00
X00443	XG.2000.1275-2	NA	aaa-Trifluorotoluene-FID	104	% Recovery	1	NA		11/16/00
X00443	XG.2000.1275-2	NA	aaa-Trifluorotoluene-PID	ND	% Recovery	1	NA		11/16/00

QC Type **LCSD** QC Matrix **SOLID**

QC Group	Run Sequence	CAS #	Analyte	Result	Units	Dilution Factor	Detection Limit	Code	Run Date
X00423-008		8260							
X00423	XG.2000.1232-7	NA	1,2 Dichloroethane-D4 (SS)	92	% Recovery	1	NA		10/31/00
X00423	XG.2000.1233-3	NA	1,2 Dichloroethane-D4 (SS)	92	% Recovery	1	NA		10/31/00
X00423	XG.2000.1232-7	NA	4-Bromofluorobenzene (SS)	98	% Recovery	1	NA		10/31/00
X00423	XG.2000.1233-3	NA	4-Bromofluorobenzene (SS)	98	% Recovery	1	NA		10/31/00
X00423	XG.2000.1232-7	NA	Dibromofluoromethane (SS)	101	% Recovery	1	NA		10/31/00
X00423	XG.2000.1233-3	NA	Dibromofluoromethane (SS)	101	% Recovery	1	NA		10/31/00
X00423	XG.2000.1232-7	NA	Toluene-D8 (SS)	101	% Recovery	1	NA		10/31/00
X00423	XG.2000.1233-3	NA	Toluene-D8 (SS)	101	% Recovery	1	NA		10/31/00
X00441-003		DRO							
X00441	XG.2000.1276-3	NA	O-terphenyl	79	% Recovery	1	NA		11/16/00
X00443-003		GRO							
X00443	XG.2000.1275-3	NA	4-Bromofluorobenzene-FID	102	% Recovery	1	NA		11/16/00
X00443	XG.2000.1275-3	NA	4-Bromofluorobenzene-PID	664	% Recovery	1	NA		11/16/00
X00443	XG.2000.1275-3	NA	aaa-Trifluorotoluene-FID	104	% Recovery	1	NA		11/16/00
X00443	XG.2000.1275-3	NA	aaa-Trifluorotoluene-PID	862	% Recovery	1	NA		11/16/00

Surrogate Summary: QC

Client: **CH2MHILL**

Project: **0011136** **160660.02.FF.SA**

QC Type **MB** QC Matrix **SOLID**

QC Group	Run Sequence	CAS #	Analyte	Result	Units	Dilution Factor	Detection Limit	Code	Run Date
X00423-001		8260							
X00423	XG.2000.1232-1	NA	1,2 Dichloroethane-D4 (SS)	103	% Recovery	1	NA		10/31/00
X00423	XG.2000.1233-1	NA	1,2 Dichloroethane-D4 (SS)	103	% Recovery	1	NA		10/31/00
X00423	XG.2000.1232-1	NA	4-Bromofluorobenzene (SS)	101	% Recovery	1	NA		10/31/00
X00423	XG.2000.1233-1	NA	4-Bromofluorobenzene (SS)	101	% Recovery	1	NA		10/31/00
X00423	XG.2000.1232-1	NA	Dibromofluoromethane (SS)	102	% Recovery	1	NA		10/31/00
X00423	XG.2000.1233-1	NA	Dibromofluoromethane (SS)	102	% Recovery	1	NA		10/31/00
X00423	XG.2000.1232-1	NA	Toluene-D8 (SS)	102	% Recovery	1	NA		10/31/00
X00423	XG.2000.1233-1	NA	Toluene-D8 (SS)	102	% Recovery	1	NA		10/31/00
X00423-009		8260							
X00423	XG.2000.1232-8	NA	1,2 Dichloroethane-D4 (SS)	98	% Recovery	1	NA		11/02/00
X00423	XG.2000.1233-4	NA	1,2 Dichloroethane-D4 (SS)	98	% Recovery	1	NA		11/02/00
X00423	XG.2000.1232-8	NA	4-Bromofluorobenzene (SS)	100	% Recovery	1	NA		11/02/00
X00423	XG.2000.1233-4	NA	4-Bromofluorobenzene (SS)	100	% Recovery	1	NA		11/02/00
X00423	XG.2000.1232-8	NA	Dibromofluoromethane (SS)	101	% Recovery	1	NA		11/02/00
X00423	XG.2000.1233-4	NA	Dibromofluoromethane (SS)	101	% Recovery	1	NA		11/02/00
X00423	XG.2000.1232-8	NA	Toluene-D8 (SS)	101	% Recovery	1	NA		11/02/00
X00423	XG.2000.1233-4	NA	Toluene-D8 (SS)	101	% Recovery	1	NA		11/02/
X00423-032		8260							
X00423	XG.2000.1292-1	NA	1,2 Dichloroethane-D4 (SS)	104	% Recovery	1	NA		11/15/00
X00423	XG.2000.1292-1	NA	4-Bromofluorobenzene (SS)	101	% Recovery	1	NA		11/15/00
X00423	XG.2000.1292-1	NA	Dibromofluoromethane (SS)	103	% Recovery	1	NA		11/15/00
X00423	XG.2000.1292-1	NA	Toluene-D8 (SS)	102	% Recovery	1	NA		11/15/00
X00423-034		8260							
X00423	XG.2000.1292-3	NA	1,2 Dichloroethane-D4 (SS)	95	% Recovery	1	NA		11/17/00
X00423	XG.2000.1293-1	NA	1,2 Dichloroethane-D4 (SS)	95	% Recovery	1	NA		11/17/00
X00423	XG.2000.1292-3	NA	4-Bromofluorobenzene (SS)	99	% Recovery	1	NA		11/17/00
X00423	XG.2000.1293-1	NA	4-Bromofluorobenzene (SS)	99	% Recovery	1	NA		11/17/00
X00423	XG.2000.1292-3	NA	Dibromofluoromethane (SS)	99	% Recovery	1	NA		11/17/00
X00423	XG.2000.1293-1	NA	Dibromofluoromethane (SS)	99	% Recovery	1	NA		11/17/00
X00423	XG.2000.1292-3	NA	Toluene-D8 (SS)	100	% Recovery	1	NA		11/17/00
X00423	XG.2000.1293-1	NA	Toluene-D8 (SS)	100	% Recovery	1	NA		11/17/00
X00441-001		DRO							
X00441	XG.2000.1276-1	NA	O-terphenyl	73	% Recovery	1	NA		11/16/00
X00441-006		DRO							
X00441	XG.2000.1276-4	NA	O-terphenyl	71	% Recovery	1	NA		11/16/00
X00441-016		DRO							
X00441	XG.2000.1287-1	NA	O-terphenyl	75	% Recovery	1	NA		11/18/00
X00441-019		DRO							
X00441	XG.2000.1306-1	NA	O-terphenyl	91	% Recovery	1	NA		11/28/00

Surrogate Summary: QC

Client: **CH2MHILL**

Project: **0011136** **160660.02.FF.SA**

X00441-025		DRO							
X00441	XG.2000.1311-1	NA	O-terphenyl	92	% Recovery	1	NA		11/29/00
X00443-001		GRO							
X00443	XG.2000.1275-1	NA	4-Bromofluorobenzene-FID	90	% Recovery	1	NA		11/16/00
X00443	XG.2000.1275-1	NA	4-Bromofluorobenzene-PID	ND	% Recovery	1	NA		11/16/00
X00443	XG.2000.1275-1	NA	aaa-Trifluorotoluene-FID	101	% Recovery	1	NA		11/16/00
X00443	XG.2000.1275-1	NA	aaa-Trifluorotoluene-PID	10	% Recovery	1	NA		11/16/00
X00443-013		GRO							
X00443	XG.2000.1286-1	NA	4-Bromofluorobenzene-FID	90	% Recovery	1	NA		11/18/00
X00443	XG.2000.1286-1	NA	4-Bromofluorobenzene-PID	ND	% Recovery	1	NA		11/18/00
X00443	XG.2000.1286-1	NA	aaa-Trifluorotoluene-FID	102	% Recovery	1	NA		11/18/00
X00443	XG.2000.1286-1	NA	aaa-Trifluorotoluene-PID	ND	% Recovery	1	NA		11/18/00
X00443-016		GRO							
X00443	XG.2000.1305-1	NA	4-Bromofluorobenzene-FID	83	% Recovery	1	NA		11/28/00
X00443	XG.2000.1305-1	NA	4-Bromofluorobenzene-PID	ND	% Recovery	1	NA		11/28/00
X00443	XG.2000.1305-1	NA	aaa-Trifluorotoluene-FID	100	% Recovery	1	NA		11/28/00
X00443	XG.2000.1305-1	NA	aaa-Trifluorotoluene-PID	ND	% Recovery	1	NA		11/28/00
X00443-022		GRO							
X00443	XG.2000.1310-1	NA	4-Bromofluorobenzene-FID	82	% Recovery	1	NA		11/29/00
X00443	XG.2000.1310-1	NA	4-Bromofluorobenzene-PID	ND	% Recovery	1	NA		11/29/00
X00443	XG.2000.1310-1	NA	aaa-Trifluorotoluene-FID	100	% Recovery	1	NA		11/29/00
[illegible]3	XG.2000.1310-1	NA	aaa-Trifluorotoluene-PID	8	% Recovery	1	NA		11/29/00

QC Type **MS** QC Matrix **SOLID**

QC Group	Run Sequence	CAS #	Analyte	Result	Units	Dilution Factor	Detection Limit	Code	Run Date
X00441-008		DRO							
X00441	XG.2000.1276-6	NA	O-terphenyl	79	% Recovery	1	NA		11/16/00
X00443-008		GRO							
X00443	XG.2000.1275-8	NA	4-Bromofluorobenzene-FID	102	% Recovery	1	NA		11/16/00
X00443	XG.2000.1275-8	NA	4-Bromofluorobenzene-PID	ND	% Recovery	1	NA		11/16/00
X00443	XG.2000.1275-8	NA	aaa-Trifluorotoluene-FID	104	% Recovery	1	NA		11/16/00
X00443	XG.2000.1275-8	NA	aaa-Trifluorotoluene-PID	ND	% Recovery	1	NA		11/16/00

QC Type **MSD** QC Matrix **SOLID**

QC Group	Run Sequence	CAS #	Analyte	Result	Units	Dilution Factor	Detection Limit	Code	Run Date
X00441-009		DRO							
X00441	XG.2000.1276-7	NA	O-terphenyl	79	% Recovery	1	NA		11/16/00
[illegible]443-009		GRO							
[illegible]3	XG.2000.1275-9	NA	4-Bromofluorobenzene-FID	102	% Recovery	1	NA		11/16/00

Surrogate Summary: QC

Client: **CH2MHILL**

Project: **0011136** **160660.02.FF.SA**

X00443	XG.2000.1275-9	NA	4-Bromofluorobenzene-PID	ND	% Recovery	1	NA	11/16/0
X00443	XG.2000.1275-9	NA	aaa-Trifluorotoluene-FID	103	% Recovery	1	NA	11/16/0
X00443	XG.2000.1275-9	NA	aaa-Trifluorotoluene-PID	315	% Recovery	1	NA	11/16/0

QC Type **MB** QC Matrix **WASTE**

QC Group	Run Sequence	CAS #	Analyte	Result	Units	Dilution Factor	Detection Limit	Code	Run Date
X00423-016		8260							
X00423	XG.2000.1252-4	NA	1,2 Dichloroethane-D4 (SS)	96	% Recovery	1	NA		11/03/0
X00423	XG.2000.1252-4	NA	4-Bromofluorobenzene (SS)	97	% Recovery	1	NA		11/03/0
X00423	XG.2000.1252-4	NA	Dibromofluoromethane (SS)	102	% Recovery	1	NA		11/03/0
X00423	XG.2000.1252-4	NA	Toluene-D8 (SS)	100	% Recovery	1	NA		11/03/0
X00423-019		8260							
X00423	XG.2000.1252-7	NA	1,2 Dichloroethane-D4 (SS)	93	% Recovery	1	NA		11/07/0
X00423	XG.2000.1252-7	NA	4-Bromofluorobenzene (SS)	98	% Recovery	1	NA		11/07/0
X00423	XG.2000.1252-7	NA	Dibromofluoromethane (SS)	100	% Recovery	1	NA		11/07/0
X00423	XG.2000.1252-7	NA	Toluene-D8 (SS)	99	% Recovery	1	NA		11/07/0
X00423-029		8260							
X00423	XG.2000.1252-12	NA	1,2 Dichloroethane-D4 (SS)	87	% Recovery	1	NA		11/08/0
X00423	XG.2000.1252-12	NA	4-Bromofluorobenzene (SS)	95	% Recovery	1	NA		11/08/0
X00423	XG.2000.1252-12	NA	Dibromofluoromethane (SS)	99	% Recovery	1	NA		11/0
X00423	XG.2000.1252-12	NA	Toluene-D8 (SS)	100	% Recovery	1	NA		11/08/0

QC Type **MS** QC Matrix **WASTE**

QC Group	Run Sequence	CAS #	Analyte	Result	Units	Dilution Factor	Detection Limit	Code	Run Date
X00423-014		8260							
X00423	XG.2000.1232-12	NA	1,2 Dichloroethane-D4 (SS)	78	% Recovery	100	NA		11/02/0
X00423	XG.2000.1252-2	NA	1,2 Dichloroethane-D4 (SS)	78	% Recovery	100	NA		11/02/0
X00423	XG.2000.1232-12	NA	4-Bromofluorobenzene (SS)	94	% Recovery	100	NA		11/02/0
X00423	XG.2000.1252-2	NA	4-Bromofluorobenzene (SS)	94	% Recovery	100	NA		11/02/0
X00423	XG.2000.1232-12	NA	Dibromofluoromethane (SS)	96	% Recovery	100	NA		11/02/0
X00423	XG.2000.1252-2	NA	Dibromofluoromethane (SS)	96	% Recovery	100	NA		11/02/0
X00423	XG.2000.1232-12	NA	Toluene-D8 (SS)	99	% Recovery	100	NA		11/02/0
X00423	XG.2000.1252-2	NA	Toluene-D8 (SS)	99	% Recovery	100	NA		11/02/0

QC Type **MSD** QC Matrix **WASTE**

QC Group	Run Sequence	CAS #	Analyte	Result	Units	Dilution Factor	Detection Limit	Code	Run Date
X00423-015		8260							
X00423	XG.2000.1232-13	NA	1,2 Dichloroethane-D4 (SS)	79	% Recovery	100	NA		11/0

Surrogate Summary: QC

Client: **CH2MHILL**

Project: **0011136 160660.02.FF.SA**

X00423	XG.2000.1252-3	NA	1,2 Dichloroethane-D4 (SS)	79	% Recovery	100	NA		11/02/00
X00423	XG.2000.1232-13	NA	4-Bromofluorobenzene (SS)	94	% Recovery	100	NA		11/02/00
X00423	XG.2000.1252-3	NA	4-Bromofluorobenzene (SS)	94	% Recovery	100	NA		11/02/00
X00423	XG.2000.1232-13	NA	Dibromofluoromethane (SS)	96	% Recovery	100	NA		11/02/00
X00423	XG.2000.1252-3	NA	Dibromofluoromethane (SS)	96	% Recovery	100	NA		11/02/00
X00423	XG.2000.1232-13	NA	Toluene-D8 (SS)	99	% Recovery	100	NA		11/02/00
X00423	XG.2000.1252-3	NA	Toluene-D8 (SS)	99	% Recovery	100	NA		11/02/00

QC Type **LCS** QC Matrix **WATER**

QC Group	Run Sequence	CAS #	Analyte	Result	Units	Dilution Factor	Detection Limit	Code	Run Date
X00436-003		8260							
X00436	XG.2000.1263-3	NA	1,2 Dichloroethane-D4 (SS)	92	% Recovery	1	NA		11/13/00
X00436	XG.2000.1263-3	NA	4-Bromofluorobenzene (SS)	99	% Recovery	1	NA		11/13/00
X00436	XG.2000.1263-3	NA	Dibromofluoromethane (SS)	100	% Recovery	1	NA		11/13/00
X00436	XG.2000.1263-3	NA	Toluene-D8 (SS)	101	% Recovery	1	NA		11/13/00

QC Type **LCSD** QC Matrix **WATER**

Group	Run Sequence	CAS #	Analyte	Result	Units	Dilution Factor	Detection Limit	Code	Run Date
X00436-004		8260							
X00436	XG.2000.1263-4	NA	1,2 Dichloroethane-D4 (SS)	95	% Recovery	1	NA		11/13/00
X00436	XG.2000.1263-4	NA	4-Bromofluorobenzene (SS)	99	% Recovery	1	NA		11/13/00
X00436	XG.2000.1263-4	NA	Dibromofluoromethane (SS)	101	% Recovery	1	NA		11/13/00
X00436	XG.2000.1263-4	NA	Toluene-D8 (SS)	101	% Recovery	1	NA		11/13/00

QC Type **MB** QC Matrix **WATER**

QC Group	Run Sequence	CAS #	Analyte	Result	Units	Dilution Factor	Detection Limit	Code	Run Date
X00436-001		8260							
X00436	XG.2000.1263-1	NA	1,2 Dichloroethane-D4 (SS)	88	% Recovery	1	NA		11/13/00
X00436	XG.2000.1263-1	NA	4-Bromofluorobenzene (SS)	96	% Recovery	1	NA		11/13/00
X00436	XG.2000.1263-1	NA	Dibromofluoromethane (SS)	98	% Recovery	1	NA		11/13/00
X00436	XG.2000.1263-1	NA	Toluene-D8 (SS)	99	% Recovery	1	NA		11/13/00
X00436-015		8260							
X00436	XG.2000.1274-1	NA	1,2 Dichloroethane-D4 (SS)	92	% Recovery	1	NA		11/14/00
X00436	XG.2000.1274-1	NA	4-Bromofluorobenzene (SS)	97	% Recovery	1	NA		11/14/00
X00436	XG.2000.1274-1	NA	Dibromofluoromethane (SS)	99	% Recovery	1	NA		11/14/00
X00436	XG.2000.1274-1	NA	Toluene-D8 (SS)	100	% Recovery	1	NA		11/14/00
X00436-018		8260							
X00436	XG.2000.1274-4	NA	1,2 Dichloroethane-D4 (SS)	87	% Recovery	1	NA		11/15/00

Surrogate Summary: QC

Client: **CH2MHILL**

Project: **0011136** **160660.02.FF.SA**

X00436	XG.2000.1274-4	NA	4-Bromofluorobenzene (SS)	96	% Recovery	1	NA	11/15/0
X00436	XG.2000.1274-4	NA	Dibromofluoromethane (SS)	97	% Recovery	1	NA	11/15/0
X00436	XG.2000.1274-4	NA	Toluene-D8 (SS)	101	% Recovery	1	NA	11/15/0
X00436-029		8260						
X00436	XG.2000.1298-1	NA	1,2 Dichloroethane-D4 (SS)	88	% Recovery	1	NA	11/17/0
X00436	XG.2000.1298-1	NA	4-Bromofluorobenzene (SS)	97	% Recovery	1	NA	11/17/0
X00436	XG.2000.1298-1	NA	Dibromofluoromethane (SS)	99	% Recovery	1	NA	11/17/0
X00436	XG.2000.1298-1	NA	Toluene-D8 (SS)	101	% Recovery	1	NA	11/17/0
X00436-032		8260						
X00436	XG.2000.1298-3	NA	1,2 Dichloroethane-D4 (SS)	88	% Recovery	1	NA	11/20/0
X00436	XG.2000.1298-3	NA	4-Bromofluorobenzene (SS)	96	% Recovery	1	NA	11/20/0
X00436	XG.2000.1298-3	NA	Dibromofluoromethane (SS)	98	% Recovery	1	NA	11/20/0
X00436	XG.2000.1298-3	NA	Toluene-D8 (SS)	99	% Recovery	1	NA	11/20/0

QC Type **MS** QC Matrix **WATER**

QC Group	Run Sequence	CAS #	Analyte	Result	Units	Dilution Factor	Detection Limit	Code	Run Date
X00436-013		8260							
X00436	XG.2000.1263-5	NA	1,2 Dichloroethane-D4 (SS)	74	% Recovery	1	NA		11/13/0
X00436	XG.2000.1263-5	NA	4-Bromofluorobenzene (SS)	93	% Recovery	1	NA		11/13/0
X00436	XG.2000.1263-5	NA	Dibromofluoromethane (SS)	96	% Recovery	1	NA		11/13
X00436	XG.2000.1263-5	NA	Toluene-D8 (SS)	99	% Recovery	1	NA		11/13/0

QC Type **MSD** QC Matrix **WATER**

QC Group	Run Sequence	CAS #	Analyte	Result	Units	Dilution Factor	Detection Limit	Code	Run Date
X00436-014		8260							
X00436	XG.2000.1263-6	NA	1,2 Dichloroethane-D4 (SS)	79	% Recovery	1	NA		11/13/0
X00436	XG.2000.1263-6	NA	4-Bromofluorobenzene (SS)	95	% Recovery	1	NA		11/13/0
X00436	XG.2000.1263-6	NA	Dibromofluoromethane (SS)	96	% Recovery	1	NA		11/13/0
X00436	XG.2000.1263-6	NA	Toluene-D8 (SS)	100	% Recovery	1	NA		11/13/0

Assaigai Analytical Laboratories, Inc.

Surrogate Summary: Fraction

Client: CH2MHILL

Project: 0011136 160660.02.FF.SA

Client Sample ID **SB-28-80** Sample Matrix **SOIL**

QC Group	Run Sequence	CAS #	Analyte	Result	Units	Dilution Factor	Detection Limit	Code	Run Date
0011136-01A		GRO							**X00443-010**
X00443	XG.2000.1279-1	NA	4-Bromofluorobenzene-FID	90	% Recovery	1	NA		11/16/00
X00443	XG.2000.1279-1	NA	4-Bromofluorobenzene-PID	ND	% Recovery	1	NA		11/16/00
X00443	XG.2000.1279-1	NA	aaa-Trifluorotoluene-FID	101	% Recovery	1	NA		11/16/00
X00443	XG.2000.1279-1	NA	aaa-Trifluorotoluene-PID	ND	% Recovery	1	NA		11/16/00
0011136-01B		DRO							**X00441-013**
X00441	XG.2000.1280-1	NA	O-terphenyl	74	% Recovery	1	NA		11/16/00

Client Sample ID **SB-28-100** Sample Matrix **SOIL**

QC Group	Run Sequence	CAS #	Analyte	Result	Units	Dilution Factor	Detection Limit	Code	Run Date
0011136-02A		8260							**X00423-035**
X00423	XG.2000.1292-4	NA	1,2 Dichloroethane-D4 (SS)	94	% Recovery	1	NA		11/17/00
[illegible]23	XG.2000.1292-4	NA	4-Bromofluorobenzene (SS)	99	% Recovery	1	NA		11/17/00
[illegible]23	XG.2000.1292-4	NA	Dibromofluoromethane (SS)	100	% Recovery	1	NA		11/17/00
X00423	XG.2000.1292-4	NA	Toluene-D8 (SS)	101	% Recovery	1	NA		11/17/00
0011136-02A		8260							**X00423-036**
X00423	XG.2000.1292-5	NA	1,2 Dichloroethane-D4 (SS)	95	% Recovery	10	NA		11/17/00
X00423	XG.2000.1292-5	NA	4-Bromofluorobenzene (SS)	103	% Recovery	10	NA		11/17/00
X00423	XG.2000.1292-5	NA	Dibromofluoromethane (SS)	99	% Recovery	10	NA		11/17/00
X00423	XG.2000.1292-5	NA	Toluene-D8 (SS)	102	% Recovery	10	NA		11/17/00
0011136-02A		GRO							**X00443-011**
X00443	XG.2000.1279-2	NA	4-Bromofluorobenzene-FID	96	% Recovery	1	NA		11/16/00
X00443	XG.2000.1279-2	NA	4-Bromofluorobenzene-PID	ND	% Recovery	1	NA		11/16/00
X00443	XG.2000.1279-2	NA	aaa-Trifluorotoluene-FID	102	% Recovery	1	NA		11/16/00
X00443	XG.2000.1279-2	NA	aaa-Trifluorotoluene-PID	ND	% Recovery	1	NA		11/16/00
0011136-02B		DRO							**X00441-014**
X00441	XG.2000.1280-2	NA	O-terphenyl	74	% Recovery	1	NA		11/16/00

Client Sample ID **SB-28-110** Sample Matrix **SOIL**

QC Group	Run Sequence	CAS #	Analyte	Result	Units	Dilution Factor	Detection Limit	Code	Run Date
0011136-03A		DRO							**X00441-015**
X00441	XG.2000.1280-3	NA	O-terphenyl	74	% Recovery	1	NA		11/16/00
1136-03A		GRO							**X00443-012**
[illegible]443	XG.2000.1279-3	NA	4-Bromofluorobenzene-FID	95	% Recovery	1	NA		11/16/00

Surrogate Summary: Fraction

Client: **CH2MHILL**

Project: **0011136** **160660.02.FF.SA**

X00443	XG.2000.1279-3	NA	4-Bromofluorobenzene-PID	ND	% Recovery	1	NA		11/16/00
X00443	XG.2000.1279-3	NA	aaa-Trifluorotoluene-FID	102	% Recovery	1	NA		11/16/00
X00443	XG.2000.1279-3	NA	aaa-Trifluorotoluene-PID	6	% Recovery	1	NA		11/16/00
0011136-03B		8260							X00423-037
X00423	XG.2000.1292-6	NA	1,2 Dichloroethane-D4 (SS)	95	% Recovery	1	NA		11/17/00
X00423	XG.2000.1292-6	NA	4-Bromofluorobenzene (SS)	100	% Recovery	1	NA		11/17/00
X00423	XG.2000.1292-6	NA	Dibromofluoromethane (SS)	98	% Recovery	1	NA		11/17/00
X00423	XG.2000.1292-6	NA	Toluene-D8 (SS)	101	% Recovery	1	NA		11/17/00

Client Sample ID **TRIP BLANK** Sample Matrix **H2O**

QC Group	Run Sequence	CAS #	Analyte	Result	Units	Dilution Factor	Detection Limit	Code	Run Date
0011136-04A		8260							X00436-031
X00436	XG.2000.1298-2	NA	1,2 Dichloroethane-D4 (SS)	93	% Recovery	1	NA		11/17/00
X00436	XG.2000.1298-2	NA	4-Bromofluorobenzene (SS)	97	% Recovery	1	NA		11/17/00
X00436	XG.2000.1298-2	NA	Dibromofluoromethane (SS)	99	% Recovery	1	NA		11/17/00
X00436	XG.2000.1298-2	NA	Toluene-D8 (SS)	100	% Recovery	1	NA		11/17/00

AL .GAI
ANALYTICAL
LABORATORIES, INC.

Chain of Cust(Jy Record

7300 JEFFERSON N.E.
ALBUQUERQUE, NEW MEXICO 871
(505) 345-8964

3332 WEDGEWOOD
EL PASO, TEXAS 79925
(915) 593-6000

127 EASTGATE DRIVE, 212-C
LOS ALAMOS, NEW MEXICO 87544
(505) 662-2558

Lab job No.: 11136 Date 11/16/00

Page 1 of 1

Client: CH2M HILL

Address: 6001 INDIAN SCHOOL Rd #350

City / State / Zip: ABQ NM 87110

Project Name / Number: KAFB ST-106

Contract / Purchase Order / Quote:

Project Manager / Contact: S. MINCHAK

Telephone No.: 884 5606

Fax No.: 883 7507

Samplers : (signature):

Analysis Required

AAL Fraction Number	Field Sample Number / Location	Date	Time	Sample Type	Type / Size of Container	Preservation Temp.	Preservation Chemical	No. of Containers	GRO/DRO	VOC									Remarks
	~~SB-2~~																		
1A,B	SB-28-80	11/15	1645	Soil	2x 4oz	ICE	NO	2	X										
2A,B	SB-28-100	11/16	935	Soil	3x 4oz	ICE	NO	3	X										
3A,B	SB-28-110	11/16	1030	Soil	2x 4oz	ICE	NO	2	X	X									
4A	TRIP BLANK 1	11/16	1215	H_2O	2x 40ml	ICE	HCL	2		X									

Relinquished by:	Date	Received by:	Relinquished by:	Date	Received by:
Signature:	11/16/00	Signature:	Signature:		Signature:
Printed:	Time	Printed:	Printed:	Time	Printed:
Company: CH2M HILL	12:35	Company:	Company:		Company:
Reason:		Reason:	Reason:		Reason:

Method of Shipment:

Shipment No.

Special Instructions:

Comments:

After analysis, samples are to be:

- ☐ Disposed of (additional fee)
- ☐ Stored (30 days max)
- ☐ Stored over 30 days (additional fee)
- ☐ Returned to customer

COURIER

ASSAIGAI
ANALYTICAL
LABORATORIES, INC.
7300 Jefferson, NE • Albuquerque, New Mexico 87109 • (505) 345-8964 • FAX (505) 345-7259
3332 Wedgewood Dr., Suite N • El Paso, Texas 79925 • (915) 593-6000 • FAX (915) 593-7820
127 Eastgate Drive, 212-C • Los Alamos, New Mexico 87544 • (505) 662-255

RECEIVED NOV 2 3 2000

Explanation of codes

B	*analyte detected in Method Blank*
E	*result is estimated*
H	*analyzed out of hold time*
N	*tentatively identified compound*
S	*subcontracted*
1-9	*see footnote*

CH2MHILL
attn: **AMY HALLORAN**
6001 INDIAN SCHOOL RD NE STE 350
ALBUQUERQUE, NM 87110-4140

Assaigai Analytical Laboratories, Inc.

Certificate of Analysis

Client: **CH2MHILL**
Project: **0011159** **ST-106**

William P. Biava: President of Assaigai Analytical Laboratories, Inc.

Client Sample ID ***SB-28-130*** Sample Matrix ***SOIL*** Sample Collected ***11/17/00 09:15:00***

QC Group	Run Sequence	CAS #	Analyte	Result	Units	Dilution Factor	Detection Limit	Code	Run Date
0011159-01A		**SW846 5030A/8015A GRO by GC/FID**							
X00443	XG.2000.1286-2		Gasoline Range Organics	ND	mg / Kg	1	0.25		11/18/00
0011159-01B		**SW846 ME/8015A Diesel Range Organics by GC/FID**							
X00441	XG.2000.1287-2		Diesel Range Organics	ND	mg / Kg	1	25		11/18/00

Client Sample ID ***SB-28-170*** Sample Matrix ***SOIL*** Sample Collected ***11/17/00 14:25:00***

QC Group	Run Sequence	CAS #	Analyte	Result	Units	Dilution Factor	Detection Limit	Code	Run Date
0011159-02A		**SW846 5030A/8015A GRO by GC/FID**							
X00443	XG.2000.1286-3		Gasoline Range Organics	ND	mg / Kg	1	0.25		11/18/00
0011159-02B		**SW846 ME/8015A Diesel Range Organics by GC/FID**							
X00441	XG.2000.1287-3		Diesel Range Organics	ND	mg / Kg	1	25		11/18/00
0011159-02C		**SW846 5030A/8021B Purgeable VOCs by GC/PID**							
X00448	XG.2000.1303-13	71-43-2	Benzene	ND	mg / Kg	1	0.005		11/21/00
X00448	XG.2000.1303-13	100-41-4	Ethylbenzene	ND	mg / Kg	1	0.005		11/21/00
X00448	XG.2000.1303-13	95-47-6	o-Xylene	ND	mg / Kg	1	0.005		11/21/00
X00448	XG.2000.1303-13	108-38-3/106-42	p/m-Xylenes	ND	mg / Kg	1	0.01		11/21/00

Member
American Council of
Independent Laboratories, Inc.

REPRODUCTION OF THIS REPORT IN LESS THAN FULL REQUIRES THE WRITTEN CONSENT OF AAL
THIS REPORT MAY NOT BE USED IN ANY MANNER BY THE CLIENT OR ANY OTHER THIRD PARTY TO CLAIM
PRODUCT ENDORSEMENT BY ANY ACCREDITATION PROGRAM

Assaigai Analytical Laboratories, Inc.

Certificate of Analysis

Client: **CH2MHILL**

Project: **0011159** **ST-106**

X00448	XG.2000.1303-13	108-88-3	Toluene	ND	mg / Kg	1	0.005	11/21/00

**** Sample specific Detection Limit is determined by multiplying the sample Dilution Factor by the listed Reporting Detection Limit. ****

**** ND = Not detected: less than the sample specific Detection Limit. Results relate only to the items tested. ****

Assaigai Analytical Laboratories, Inc.

Quality Control Summary

Client: **CH2MHILL**

Project: **0011159** **ST-106**

Explanation of codes

D	*Not applicable due to sample dilution*
L	*Not applicable due to MDL proximity*

QC Type **LCS: Lab Control Spike** QC Matrix **SOLID**

QC Group	Run Sequence	CAS #	Analyte	Result	Units	Dilution Factor	Detection Limit	Code	Run Date
X00441-002		**SW846 ME/8015A Diesel Range Organics by GC/FID**							
X00441	XG.2000.1276-2		Diesel Range Organics	85	% Recovery	1	NA		11/16/00
X00443-002		**SW846 5030A/8015A GRO by GC/FID**							
X00443	XG.2000.1275-2		Gasoline Range Organics	96	% Recovery	1	NA		11/16/00
X00448-002		**SW846 5030A/8021B Purgeable VOCs by GC/PID**							
X00448	XG.2000.1303-8	71-43-2	Benzene	101	% Recovery	1	NA		11/21/00
X00448	XG.2000.1303-8	100-41-4	Ethylbenzene	101	% Recovery	1	NA		11/21/00
X00448	XG.2000.1303-8	95-47-6	o-Xylene	99	% Recovery	1	NA		11/21/00
X00448	XG.2000.1303-8	108-38-3/106-42	p/m-Xylenes	100	% Recovery	1	NA		11/21/00
X00448	XG.2000.1303-8	108-88-3	Toluene	99	% Recovery	1	NA		11/21/00

QC Type **LCSD: Lab Control Spike Duplicate Accuracy** QC Matrix **SOLID**

QC Group	Run Sequence	CAS #	Analyte	Result	Units	Dilution Factor	Detection Limit	Code	Run Date
X00441-003		**SW846 ME/8015A Diesel Range Organics by GC/FID**							
X00441	XG.2000.1276-3		Diesel Range Organics	84	% Recovery	1	NA		11/16/00
X00443-003		**SW846 5030A/8015A GRO by GC/FID**							
X00443	XG.2000.1275-3		Gasoline Range Organics	96	% Recovery	1	NA		11/16/00
X00448-003		**SW846 5030A/8021B Purgeable VOCs by GC/PID**							
X00448	XG.2000.1303-9	71-43-2	Benzene	101	% Recovery	1	NA		11/21/00
X00448	XG.2000.1303-9	100-41-4	Ethylbenzene	102	% Recovery	1	NA		11/21/00
X00448	XG.2000.1303-9	95-47-6	o-Xylene	100	% Recovery	1	NA		11/21/00
X00448	XG.2000.1303-9	108-38-3/106-42	p/m-Xylenes	101	% Recovery	1	NA		11/21/00
X00448	XG.2000.1303-9	108-88-3	Toluene	99	% Recovery	1	NA		11/21/00

QC Type **LCSD: Lab Control Spike Duplicate Precision** QC Matrix **SOLID**

QC Group	Run Sequence	CAS #	Analyte	Result	Units	Dilution Factor	Detection Limit	Code	Run Date
X00441-003		**SW846 ME/8015A Diesel Range Organics by GC/FID**							
X00441	XG.2000.1276-3		Diesel Range Organics	< 1	RPD	1	NA		11/16/00
X00443-003		**SW846 5030A/8015A GRO by GC/FID**							
X00443	XG.2000.1275-3		Gasoline Range Organics	< 1	RPD	1	NA		11/16/00
X00448-003		**SW846 5030A/8021B Purgeable VOCs by GC/PID**							
[illegible]48	XG.2000.1303-9	71-43-2	Benzene	< 1	RPD	1	NA		11/21/00
[illegible]48	XG.2000.1303-9	100-41-4	Ethylbenzene	< 1	RPD	1	NA		11/21/00

Quality Control Summary

Client: **CH2MHILL**

Project: **0011159** **ST-106**

Explanation of codes

D *Not applicable due to sample diluti*

L *Not applicable due to MDL proxim*

X00448	XG.2000.1303-9	95-47-6	o-Xylene	< 1	RPD	1	NA	11/21/00
X00448	XG.2000.1303-9	108-38-3/106-42	p/m-Xylenes	< 1	RPD	1	NA	11/21/00
X00448	XG.2000.1303-9	108-88-3	Toluene	< 1	RPD	1	NA	11/21/00

QC Type **MB: Method Blank** QC Matrix **SOLID**

QC Group	Run Sequence	CAS #	Analyte	Result	Units	Dilution Factor	Detection Limit	Code	Run Date
X00441-001		**SW846 ME/8015A Diesel Range Organics by GC/FID**							
X00441	XG.2000.1276-1		Diesel Range Organics	ND	mg / Kg	1	25		11/16/00
X00441-006		**SW846 ME/8015A Diesel Range Organics by GC/FID**							
X00441	XG.2000.1276-4		Diesel Range Organics	ND	mg / Kg	1	25		11/16/00
X00441-016		**SW846 ME/8015A Diesel Range Organics by GC/FID**							
X00441	XG.2000.1287-1		Diesel Range Organics	ND	mg / Kg	1	25		11/18/00
X00443-001		**SW846 5030A/8015A GRO by GC/FID**							
X00443	XG.2000.1275-1		Gasoline Range Organics	ND	mg / Kg	1	0.25		11/16/00
X00443-013		**SW846 5030A/8015A GRO by GC/FID**							
X00443	XG.2000.1286-1		Gasoline Range Organics	ND	mg / Kg	1	0.25		11/18/00
X00448-001		**SW846 5030A/8021B Purgeable VOCs by GC/PID**							
X00448	XG.2000.1303-7	71-43-2	Benzene	ND	mg / Kg	1	0.005		11/21/
X00448	XG.2000.1303-7	100-41-4	Ethylbenzene	ND	mg / Kg	1	0.005		11/21/00
X00448	XG.2000.1303-7	95-47-6	o-Xylene	ND	mg / Kg	1	0.005		11/21/00
X00448	XG.2000.1303-7	108-38-3/106-42	p/m-Xylenes	ND	mg / Kg	1	0.01		11/21/00
X00448	XG.2000.1303-7	108-88-3	Toluene	ND	mg / Kg	1	0.005		11/21/00

QC Type **MS: Matrix Spike** QC Matrix **SOLID**

QC Group	Run Sequence	CAS #	Analyte	Result	Units	Dilution Factor	Detection Limit	Code	Run Date
X00441-008		**SW846 ME/8015A Diesel Range Organics by GC/FID**							
X00441	XG.2000.1276-6		Diesel Range Organics	84	% Recovery	1	NA		11/16/00
X00443-008		**SW846 5030A/8015A GRO by GC/FID**							
X00443	XG.2000.1275-8		Gasoline Range Organics	99	% Recovery	1	NA		11/16/00
X00448-005		**SW846 5030A/8021B Purgeable VOCs by GC/PID**							
X00448	XG.2000.1303-11	71-43-2	Benzene	106	% Recovery	1	NA		11/21/00
X00448	XG.2000.1303-11	100-41-4	Ethylbenzene	105	% Recovery	1	NA		11/21/00
X00448	XG.2000.1303-11	95-47-6	o-Xylene	103	% Recovery	1	NA		11/21/00
X00448	XG.2000.1303-11	108-38-3/106-42	p/m-Xylenes	104	% Recovery	1	NA		11/21/00
X00448	XG.2000.1303-11	108-88-3	Toluene	103	% Recovery	1	NA		11/21/00

Quality Control Summary

Explanation of codes

D	*Not applicable due to sample dilution*
L	*Not applicable due to MDL proximity*

t: CH2MHILL

Project: 0011159 ST-106

QC Type **MSD: Matrix Spike Duplicate Accuracy** QC Matrix **SOLID**

QC Group	Run Sequence	CAS #	Analyte	Result	Units	Dilution Factor	Detection Limit	Code	Run Date
X00441-009		**SW846 ME/8015A Diesel Range Organics by GC/FID**							
X00441	XG.2000.1276-7		Diesel Range Organics	85	% Recovery	1	NA		11/16/00
X00443-009		**SW846 5030A/8015A GRO by GC/FID**							
X00443	XG.2000.1275-9		Gasoline Range Organics	96	% Recovery	1	NA		11/16/00
X00448-006		**SW846 5030A/8021B Purgeable VOCs by GC/PID**							
X00448	XG.2000.1303-12	71-43-2	Benzene	107	% Recovery	1	NA		11/21/00
X00448	XG.2000.1303-12	100-41-4	Ethylbenzene	106	% Recovery	1	NA		11/21/00
X00448	XG.2000.1303-12	95-47-6	o-Xylene	105	% Recovery	1	NA		11/21/00
X00448	XG.2000.1303-12	108-38-3/106-42	p/m-Xylenes	105	% Recovery	1	NA		11/21/00
X00448	XG.2000.1303-12	108-88-3	Toluene	104	% Recovery	1	NA		11/21/00

QC Type **MSD: Matrix Spike Duplicate Precision** QC Matrix **SOLID**

roup	Run Sequence	CAS #	Analyte	Result	Units	Dilution Factor	Detection Limit	Code	Run Date
X00441-009		**SW846 ME/8015A Diesel Range Organics by GC/FID**							
X00441	XG.2000.1276-7		Diesel Range Organics	1	RPD	1	NA		11/16/00
X00443-009		**SW846 5030A/8015A GRO by GC/FID**							
X00443	XG.2000.1275-9		Gasoline Range Organics	2	RPD	1	NA		11/16/00
X00448-006		**SW846 5030A/8021B Purgeable VOCs by GC/PID**							
X00448	XG.2000.1303-12	71-43-2	Benzene	< 1	RPD	1	NA		11/21/00
X00448	XG.2000.1303-12	100-41-4	Ethylbenzene	< 1	RPD	1	NA		11/21/00
X00448	XG.2000.1303-12	95-47-6	o-Xylene	2	RPD	1	NA		11/21/00
X00448	XG.2000.1303-12	108-38-3/106-42	p/m-Xylenes	< 1	RPD	1	NA		11/21/00
X00448	XG.2000.1303-12	108-88-3	Toluene	< 1	RPD	1	NA		11/21/00

Surrogate Summary: QC

Client: **CH2MHILL**

Project: **0011159 ST-106**

QC Type **LCS** QC Matrix **SOLID**

QC Group	Run Sequence	CAS #	Analyte	Result	Units	Dilution Factor	Detection Limit	Code	Run Date
X00441-002		DRO							
X00441	XG.2000.1276-2	NA	O-terphenyl	81	% Recovery	1	NA		11/16/00
X00443-002		GRO							
X00443	XG.2000.1275-2	NA	4-Bromofluorobenzene-FID	102	% Recovery	1	NA		11/16/00
X00443	XG.2000.1275-2	NA	4-Bromofluorobenzene-PID	ND	% Recovery	1	NA		11/16/00
X00443	XG.2000.1275-2	NA	aaa-Trifluorotoluene-FID	104	% Recovery	1	NA		11/16/00
X00443	XG.2000.1275-2	NA	aaa-Trifluorotoluene-PID	ND	% Recovery	1	NA		11/16/00
X00448-002		BTEXALL							
X00448	XG.2000.1303-8	NA	4-Bromofluorobenzene	97	% Recovery	1	NA		11/21/00
X00448	XG.2000.1303-8	NA	aaa-Trifluorotoluene	98	% Recovery	1	NA		11/21/00
X00448	XG.2000.1303-8	NA	Bromochloromethane	120	% Recovery	1	NA		11/21/00
X00448	XG.2000.1303-8	NA	Bromochloropropane	48	% Recovery	1	NA		11/21/00
X00448	XG.2000.1303-8	NA	Dichlorobutane	64	% Recovery	1	NA		11/21/00

QC Type **LCSD** QC Matrix **SOLID**

QC Group	Run Sequence	CAS #	Analyte	Result	Units	Dilution Factor	Detection Limit	Code	Run Date
X00441-003		DRO							
X00441	XG.2000.1276-3	NA	O-terphenyl	79	% Recovery	1	NA		11/16/00
X00443-003		GRO							
X00443	XG.2000.1275-3	NA	4-Bromofluorobenzene-FID	102	% Recovery	1	NA		11/16/00
X00443	XG.2000.1275-3	NA	4-Bromofluorobenzene-PID	664	% Recovery	1	NA		11/16/00
X00443	XG.2000.1275-3	NA	aaa-Trifluorotoluene-FID	104	% Recovery	1	NA		11/16/00
X00443	XG.2000.1275-3	NA	aaa-Trifluorotoluene-PID	862	% Recovery	1	NA		11/16/00
X00448-003		BTEXALL							
X00448	XG.2000.1303-9	NA	4-Bromofluorobenzene	99	% Recovery	1	NA		11/21/00
X00448	XG.2000.1303-9	NA	aaa-Trifluorotoluene	98	% Recovery	1	NA		11/21/00
X00448	XG.2000.1303-9	NA	Bromochloromethane	58	% Recovery	1	NA		11/21/00
X00448	XG.2000.1303-9	NA	Bromochloropropane	41	% Recovery	1	NA		11/21/00
X00448	XG.2000.1303-9	NA	Dichlorobutane	123	% Recovery	1	NA		11/21/00

QC Type **MB** QC Matrix **SOLID**

QC Group	Run Sequence	CAS #	Analyte	Result	Units	Dilution Factor	Detection Limit	Code	Run Date
X00441-001		DRO							
'41	XG.2000.1276-1	NA	O-terphenyl	73	% Recovery	1	NA		11/16/00

Surrogate Summary: QC

Client: **CH2MHILL**

Project: **0011159** **ST-106**

X00441-006		DRO							
X00441	XG.2000.1276-4	NA	O-terphenyl	71	% Recovery	1	NA		11/16/00
X00441-016		DRO							
X00441	XG.2000.1287-1	NA	O-terphenyl	75	% Recovery	1	NA		11/18/00
X00443-001		GRO							
X00443	XG.2000.1275-1	NA	4-Bromofluorobenzene-FID	90	% Recovery	1	NA		11/16/00
X00443	XG.2000.1275-1	NA	4-Bromofluorobenzene-PID	ND	% Recovery	1	NA		11/16/00
X00443	XG.2000.1275-1	NA	aaa-Trifluorotoluene-FID	101	% Recovery	1	NA		11/16/00
X00443	XG.2000.1275-1	NA	aaa-Trifluorotoluene-PID	10	% Recovery	1	NA		11/16/00
X00443-013		GRO							
X00443	XG.2000.1286-1	NA	4-Bromofluorobenzene-FID	90	% Recovery	1	NA		11/18/00
X00443	XG.2000.1286-1	NA	4-Bromofluorobenzene-PID	ND	% Recovery	1	NA		11/18/00
X00443	XG.2000.1286-1	NA	aaa-Trifluorotoluene-FID	102	% Recovery	1	NA		11/18/00
X00443	XG.2000.1286-1	NA	aaa-Trifluorotoluene-PID	ND	% Recovery	1	NA		11/18/00
X00448-001		BTEXALL							
X00448	XG.2000.1303-7	NA	4-Bromofluorobenzene	98	% Recovery	1	NA		11/21/00
X00448	XG.2000.1303-7	NA	aaa-Trifluorotoluene	98	% Recovery	1	NA		11/21/00
X00448	XG.2000.1303-7	NA	Bromochloromethane	14	% Recovery	1	NA		11/21/00
X00448	XG.2000.1303-7	NA	Bromochloropropane	59	% Recovery	1	NA		11/21/00
X00448	XG.2000.1303-7	NA	Dichlorobutane	12	% Recovery	1	NA		11/21/00

QC Type **MS** QC Matrix **SOLID**

QC Group	Run Sequence	CAS #	Analyte	Result	Units	Dilution Factor	Detection Limit	Code	Run Date
X00441-008		DRO							
X00441	XG.2000.1276-6	NA	O-terphenyl	79	% Recovery	1	NA		11/16/00
X00443-008		GRO							
X00443	XG.2000.1275-8	NA	4-Bromofluorobenzene-FID	102	% Recovery	1	NA		11/16/00
X00443	XG.2000.1275-8	NA	4-Bromofluorobenzene-PID	ND	% Recovery	1	NA		11/16/00
X00443	XG.2000.1275-8	NA	aaa-Trifluorotoluene-FID	104	% Recovery	1	NA		11/16/00
X00443	XG.2000.1275-8	NA	aaa-Trifluorotoluene-PID	ND	% Recovery	1	NA		11/16/00
X00448-005		BTEXALL							
X00448	XG.2000.1303-11	NA	4-Bromofluorobenzene	100	% Recovery	1	NA		11/21/00
X00448	XG.2000.1303-11	NA	aaa-Trifluorotoluene	101	% Recovery	1	NA		11/21/00
X00448	XG.2000.1303-11	NA	Bromochloromethane	31	% Recovery	1	NA		11/21/00
X00448	XG.2000.1303-11	NA	Bromochloropropane	42	% Recovery	1	NA		11/21/00
X00448	XG.2000.1303-11	NA	Dichlorobutane	48	% Recovery	1	NA		11/21/00

Surrogate Summary: QC

Client: **CH2MHILL**

ct: **0011159** **ST-106**

QC Type **MSD** QC Matrix **SOLID**

QC Group	Run Sequence	CAS #	Analyte	Result	Units	Dilution Factor	Detection Limit	Code	Run Date
X00441-009		DRO							
X00441	XG.2000.1276-7	NA	O-terphenyl	79	% Recovery	1	NA		11/16/00
X00443-009		GRO							
X00443	XG.2000.1275-9	NA	4-Bromofluorobenzene-FID	102	% Recovery	1	NA		11/16/00
X00443	XG.2000.1275-9	NA	4-Bromofluorobenzene-PID	ND	% Recovery	1	NA		11/16/00
X00443	XG.2000.1275-9	NA	aaa-Trifluorotoluene-FID	103	% Recovery	1	NA		11/16/00
X00443	XG.2000.1275-9	NA	aaa-Trifluorotoluene-PID	315	% Recovery	1	NA		11/16/00
X00448-006		BTEXALL							
X00448	XG.2000.1303-12	NA	4-Bromofluorobenzene	100	% Recovery	1	NA		11/21/00
X00448	XG.2000.1303-12	NA	aaa-Trifluorotoluene	102	% Recovery	1	NA		11/21/00
X00448	XG.2000.1303-12	NA	Bromochloromethane	159	% Recovery	1	NA		11/21/00
X00448	XG.2000.1303-12	NA	Bromochloropropane	63	% Recovery	1	NA		11/21/00
X00448	XG.2000.1303-12	NA	Dichlorobutane	235	% Recovery	1	NA		11/21/00

Assaigai Analytical Laboratories, Inc.

Surrogate Summary: Fraction

Client: **CH2MHILL**

Project: **0011159** **ST-106**

Client Sample ID **SB-28-130** Sample Matrix **SOIL**

QC Group	Run Sequence	CAS #	Analyte	Result	Units	Dilution Factor	Detection Limit	Code	Run Date
0011159-01A		GRO							X00443-014
X00443	XG.2000.1286-2	NA	4-Bromofluorobenzene-FID	94	% Recovery	1	NA		11/18/00
X00443	XG.2000.1286-2	NA	4-Bromofluorobenzene-PID	ND	% Recovery	1	NA		11/18/00
X00443	XG.2000.1286-2	NA	aaa-Trifluorotoluene-FID	103	% Recovery	1	NA		11/18/00
X00443	XG.2000.1286-2	NA	aaa-Trifluorotoluene-PID	ND	% Recovery	1	NA		11/18/00
0011159-01B		DRO							X00441-017
X00441	XG.2000.1287-2	NA	O-terphenyl	78	% Recovery	1	NA		11/18/00

Client Sample ID **SB-28-170** Sample Matrix **SOIL**

QC Group	Run Sequence	CAS #	Analyte	Result	Units	Dilution Factor	Detection Limit	Code	Run Date
0011159-02A		GRO							X00443-015
X00443	XG.2000.1286-3	NA	4-Bromofluorobenzene-FID	94	% Recovery	1	NA		11/18/00
X00443	XG.2000.1286-3	NA	4-Bromofluorobenzene-PID	ND	% Recovery	1	NA		11/18/00
X00443	XG.2000.1286-3	NA	aaa-Trifluorotoluene-FID	102	% Recovery	1	NA		11/1[illegible]
X00443	XG.2000.1286-3	NA	aaa-Trifluorotoluene-PID	ND	% Recovery	1	NA		11/18/00
0011159-02B		DRO							X00441-018
X00441	XG.2000.1287-3	NA	O-terphenyl	78	% Recovery	1	NA		11/18/00
0011159-02C		BTEXALL							X00448-007
X00448	XG.2000.1303-13	NA	4-Bromofluorobenzene	100	% Recovery	1	NA		11/21/00
X00448	XG.2000.1303-13	NA	aaa-Trifluorotoluene	101	% Recovery	1	NA		11/21/00
X00448	XG.2000.1303-13	NA	Bromochloromethane	60	% Recovery	1	NA		11/21/00
X00448	XG.2000.1303-13	NA	Bromochloropropane	55	% Recovery	1	NA		11/21/00
X00448	XG.2000.1303-13	NA	Dichlorobutane	65	% Recovery	1	NA		11/21/00

CH2MHILL Applied Sciences Lab
CHAIN OF CUSTODY RECORD
AND AGREEMENT TO PERFORM SERVICES

CVO 2300 NW Walnut Boulevard
Corvallis, OR 97330-3638
(541) 752-4271 FAX (541) 752-0276

COC # _____

Project # | Purchase Order #

Project Name: KAFB ST-106 Bulk Fuels Facility

Company Name: CH2M HILL

Project Manager or Contact & Phone #: S MICHAK

Report Copy to:

Requested Completion Date: 7-DAY

Site ID: ST-106

Sample Disposal: Dispose ☐ Return ☐

Sampling Date	Sampling Time	Type COMP	Type GRAB	Matrix WATER	Matrix SOIL	Matrix AIR	CLIENT SAMPLE ID (9 CHARACTERS)	LAB QC	TOTAL # OF CONTAINERS	Requested Analytical Method # GRO/DRO	Requested Analytical Method # BTEX								
										Preservative NO	Preservative NO								
11/17	915		X		X		02-28-130		2	X									
11/17	420		X		X		03-28-170		3	X	X								

THIS AREA FOR LAB USE ONLY

Lab #	Page	of
Lab PM	Custody Review	
Log In	LIMS Verification	
pH	Custody Seals Y N	
	Ice Y N	
QC Level 1 2 3 Other _____		
Cooler Temperature		

Alternate Description	Lab ID

Relinquished By: [illegible] CH2M HILL	Date/Time: 11/17 1525	Received By	Date/Time
Sampled By and Title: [illegible] (Please sign and print name)	Date/Time: 11/17 1525	Relinquished By (Please sign and print name)	Date/Time
Received By: [illegible] (Please sign and print name)	Date/Time: [illegible]	Relinquished By (Please sign and print name)	Date/Time
Received By (Please sign and print name)	Date/Time	Shipped Via: UPS Fed-Ex Other _____	Shipping #

Empty Bottles

Special Instructions:

Instructions and Agreement Provisions on Reverse Side

DISTRIBUTION: Original - LAB, Yellow - LAB, Pink - Client

ASSAIGAI
ANALYTICAL
LABORATORIES, INC.

7300 Jefferson, NE • Albuquerque, New Mexico 87109 • (505) 345-8964 • FAX (505) 345-7259
3332 Wedgewood Dr., Suite N • El Paso, Texas 79925 • (915) 593-6000 • FAX (915) 593-7820
127 Eastgate Drive, 212-C • Los Alamos, New Mexico 87544 • (505) 662-2558

RECEIVED MAR 5 2001

Explanation of codes

B	*analyte detected in Method Blank*
E	*result is estimated*
H	*analyzed out of hold time*
N	*tentatively identified compound*
S	*subcontracted*
1-9	*see footnote*

CH2MHILL
attn: **AMY HALLORAN**
6001 INDIAN SCHOOL RD NE STE 350
ALBUQUERQUE, NM 87110-4140

Assaigai Analytical Laboratories, Inc.

Certificate of Analysis

Client: **CH2MHILL**
Project: **0102137** **160660.02.FF.SA**

William P. Biava: President of Assaigai Analytical Laboratories, Inc.

Client Sample ID ***8430*** Sample Matrix ***SOIL*** Sample Collected ***02/12/01 14:45:00***

QC Group	Run Sequence	CAS #	Analyte	Result	Units	Dilution Factor	Detection Limit	Code	Run Date
0102137-01A		**SW846 5030A/8015A GRO by GC/FID**							
X0150	XG.2001.192-2		Gasoline Range Organics	ND	mg / Kg	1	0.25		02/13/01
0102137-01B		**SW846 ME/8015A Diesel Range Organics by GC/FID**							
X0148	XG.2001.194-2		Diesel Range Organics	48	mg / Kg	1	25		02/14/01
0102137-01C		**SW846 8260A Purgeable VOCs by GC/MS**							
X0155	XG.2001.202-18	75-34-3	1,1 Dichloroethane	ND	mg / Kg	1	0.005		02/15/01
X0155	XG.2001.202-18	75-34-3	1,1 Dichloroethene	ND	mg / Kg	1	0.005		02/15/01
X0155	XG.2001.202-18	71-55-6	1,1,1 Trichloroethane	ND	mg / Kg	1	0.005		02/15/01
X0155	XG.2001.202-18	630-20-6	1,1,1,2 Tetrachloroethane	ND	mg / Kg	1	0.005		02/15/01
X0155	XG.2001.202-18	79-00-5	1,1,2 Trichloroethane	ND	mg / Kg	1	0.005		02/15/01
X0155	XG.2001.202-18	79-34-5	1,1,2,2 Tetrachloroethane	ND	mg / Kg	1	0.005		02/15/01
X0155	XG.2001.202-18	106-93-4	1,2 Dibromoethane (EDB)	ND	mg / Kg	1	0.005		02/15/01
X0155	XG.2001.202-18	95-50-1	1,2 Dichlorobenzene	ND	mg / Kg	1	0.005		02/15/01
X0155	XG.2001.202-18	107-06-2	1,2 Dichloroethane	ND	mg / Kg	1	0.005		02/15/01
X0155	XG.2001.202-18	78-87-5	1,2 Dichloropropane	ND	mg / Kg	1	0.005		02/15/01
X0155	XG.2001.202-18	96-18-4	1,2,3 Trichloropropane	ND	mg / Kg	1	0.005		02/15/01
X0155	XG.2001.202-18	95-63-6	1,2,4-Trimethylbenzene	ND	mg / Kg	1	0.005		02/15/01
X0155	XG.2001.202-18	541-73-1	1,3 Dichlorobenzene	ND	mg / Kg	1	0.005		02/15/01
X0155	XG.2001.202-18	108-67-8	1,3,5-Trimethylbenzene	ND	mg / Kg	1	0.005		02/15/01
X0155	XG.2001.202-18	764-41-0	1,4 Dichloro-2-butene	ND	mg / Kg	1	0.05		02/15/01
5	XG.2001.202-18	106-46-7	1,4 Dichlorobenzene	ND	mg / Kg	1	0.005		02/15/01
5	XG.2001.202-18	78-93-3	2-Butanone (MEK)	ND	mg / Kg	1	0.025		02/15/01

Member
American Council of
Independent Laboratories, Inc

REPRODUCTION OF THIS REPORT IN LESS THAN FULL REQUIRES THE WRITTEN CONSENT OF AAL
THIS REPORT MAY NOT BE USED IN ANY MANNER BY THE CLIENT OR ANY OTHER THIRD PARTY TO CLAIM
PRODUCT ENDORSEMENT BY ANY ACCREDITATION PROGRAM

Certificate of Analysis

Client: **CH2MHILL**

RECEIVED MAR 5 2001

Project: **0102137** **160660.02.FF.SA**

X0155	XG.2001.202-18	110-75-8	2-Chloroethylvinylether	ND	mg / Kg	1	0.025	02/15/01
X0155	XG.2001.202-18	591-78-6	2-Hexanone (MBK)	ND	mg / Kg	1	0.025	02/15/01
X0155	XG.2001.202-18	108-10-1	4-Methyl-2-pentanone (MIBK)	ND	mg / Kg	1	0.025	02/15/01
X0155	XG.2001.202-18	67-64-1	Acetone	ND	mg / Kg	1	0.05	02/15/01
X0155	XG.2001.202-18	107-02-8	Acrolein	ND	mg / Kg	1	0.1	02/15/01
X0155	XG.2001.202-18	107-13-1	Acrylonitrile	ND	mg / Kg	1	0.1	02/15/01
X0155	XG.2001.202-18	71-43-2	Benzene	ND	mg / Kg	1	0.005	02/15/01
X0155	XG.2001.202-18	75-27-4	Bromodichloromethane	ND	mg / Kg	1	0.005	02/15/01
X0155	XG.2001.202-18	75-25-2	Bromoform	ND	mg / Kg	1	0.005	02/15/01
X0155	XG.2001.202-18	74-83-9	Bromomethane	ND	mg / Kg	1	0.025	02/15/01
X0155	XG.2001.202-18	75-15-0	Carbon disulfide	ND	mg / Kg	1	0.025	02/15/01
X0155	XG.2001.202-18	56-23-5	Carbon tetrachloride	ND	mg / Kg	1	0.005	02/15/01
X0155	XG.2001.202-18	108-90-7	Chlorobenzene	ND	mg / Kg	1	0.005	02/15/01
X0155	XG.2001.202-18	124-48-1	Chlorodibromomethane	ND	mg / Kg	1	0.005	02/15/01
X0155	XG.2001.202-18	75-00-3	Chloroethane	ND	mg / Kg	1	0.025	02/15/01
X0155	XG.2001.202-18	67-66-3	Chloroform	ND	mg / Kg	1	0.005	02/15/01
X0155	XG.2001.202-18	74-87-3	Chloromethane	ND	mg / Kg	1	0.025	02/15/01
X0155	XG.2001.202-18	156-59-2	cis-1,2 dichloroethene	ND	mg / Kg	1	0.005	02/15/01
X0155	XG.2001.202-18	10061-01-5	cis-1,3 dichloropropene	ND	mg / Kg	1	0.005	02/15/01
X0155	XG.2001.202-18	74-95-3	Dibromomethane	ND	mg / Kg	1	0.005	02/15/01
X0155	XG.2001.202-18	97-63-2	Ethyl methacrylate	ND	mg / Kg	1	0.025	02/15/01
X0155	XG.2001.202-18	100-41-4	Ethylbenzene	ND	mg / Kg	1	0.005	02/15/01
X0155	XG.2001.202-18		Freon 113	ND	mg / Kg	1	0.025	02/15/[illegible]
X0155	XG.2001.202-18	75-71-8	Freon 12	ND	mg / Kg	1	0.05	02/15/[illegible]
X0155	XG.2001.202-18	74-88-4	Iodomethane	ND	mg / Kg	1	0.025	02/15/01
X0155	XG.2001.202-18	1634-04-4	Methyl t-butyl ether (MTBE)	ND	mg / Kg	1	0.005	02/15/01
X0155	XG.2001.202-18	75-09-2	Methylene chloride	ND	mg / Kg	1	0.05	02/15/01
X0155	XG.2001.202-18	91-20-3	Naphthalene	ND	mg / Kg	1	0.025	02/15/01
X0155	XG.2001.202-18	95-47-6	o-Xylene	ND	mg / Kg	1	0.005	02/15/01
X0155	XG.2001.202-18	108-38-3/106-42	p/m Xylenes	ND	mg / Kg	1	0.01	02/15/01
X0155	XG.2001.202-18	100-42-5	Styrene	ND	mg / Kg	1	0.005	02/15/01
X0155	XG.2001.202-18	156-60-5	t-1,2 Dichloroethene	ND	mg / Kg	1	0.005	02/15/01
X0155	XG.2001.202-18	10061-02-6	t-1,3 Dichloropropene	ND	mg / Kg	1	0.005	02/15/01
X0155	XG.2001.202-18	127-18-4	Tetrachloroethene	ND	mg / Kg	1	0.005	02/15/01
X0155	XG.2001.202-18	108-88-3	Toluene	ND	mg / Kg	1	0.005	02/15/01
X0155	XG.2001.202-18	79-01-6	Trichloroethene	ND	mg / Kg	1	0.005	02/15/01
X0155	XG.2001.202-18	75-69-4	Trichlorofluoromethane	ND	mg / Kg	1	0.025	02/15/01
X0155	XG.2001.202-18	108-05-4	Vinyl acetate	ND	mg / Kg	1	0.025	02/15/01
X0155	XG.2001.202-18	75-01-4	Vinyl chloride	ND	mg / Kg	1	0.025	02/15/01

0102137-01D **SW846 3550A/8270B SVOCs by GC/MS**

X0130	XG.2001.209-6	120-82-1	1,2,4-Trichlorobenzene	ND	mg / Kg	1	0.03	02/15/01
X0130	XG.2001.209-6	95-50-1	1,2-Dichlorobenzene	ND	mg / Kg	1	0.03	02/15/01
X0130	XG.2001.209-6	541-73-1	1,3-Dichlorobenzene	ND	mg / Kg	1	0.03	02/15/01
X0130	XG.2001.209-6	106-46-7	1,4-Dichlorobenzene	ND	mg / Kg	1	0.03	02/15/01
X0130	XG.2001.209-6	90-12-0	1-Methylnaphthalene	ND	mg / Kg	1	0.03	02/15/01
X0130	XG.2001.209-6	58-90-2	2,3,4,6-Tetrachlorophenol	ND	mg / Kg	1	1.5	02/15/01
X0130	XG.2001.209-6	95-95-4	2,4,5-Trichlorophenol	ND	mg / Kg	1	0.3	02/15/[illegible]

Certificate of Analysis

.t: CH2MHILL

Project: 0102137 160660.02.FF.SA

X0130	XG.2001.209-6	88-06-2	2,4,6-Trichlorophenol	ND	mg / Kg	1	0.3		02/15/01
X0130	XG.2001.209-6	120-83-2	2,4-Dichlorophenol	ND	mg / Kg	1	0.3		02/15/01
X0130	XG.2001.209-6	105-67-9	2,4-Dimethylphenol	ND	mg / Kg	1	0.03		02/15/01
X0130	XG.2001.209-6	51-28-5	2,4-Dinitrophenol	ND	mg / Kg	1	0.67		02/15/01
X0130	XG.2001.209-6	121-14-2	2,4-Dinitrotoluene	ND	mg / Kg	1	0.3		02/15/01
X0130	XG.2001.209-6	606-20-2	2,6-Dinitrotoluene	0.59	mg / Kg	1	0.3		02/15/01
X0130	XG.2001.209-6	91-58-7	2-Chloronaphthalene	ND	mg / Kg	1	0.03		02/15/01
X0130	XG.2001.209-6	95-57-8	2-Chlorophenol	ND	mg / Kg	1	0.03		02/15/01
X0130	XG.2001.209-6	91-57-6	2-Methylnaphthalene	ND	mg / Kg	1	0.03		02/15/01
X0130	XG.2001.209-6	95-48-7	2-Methylphenol	ND	mg / Kg	1	0.03		02/15/01
X0130	XG.2001.209-6	88-74-4	2-Nitroaniline	ND	mg / Kg	1	0.3		02/15/01
X0130	XG.2001.209-6	88-75-5	2-Nitrophenol	ND	mg / Kg	1	0.3		02/15/01
X0130	XG.2001.209-6		3+4 Methylphenol	ND	mg / Kg	1	0.03		02/15/01
X0130	XG.2001.209-6	91-94-1	3,3-Dichlorobenzidine	ND	mg / Kg	1	0.3		02/15/01
X0130	XG.2001.209-6	99-09-2	3-Nitroaniline	ND	mg / Kg	1	0.3		02/15/01
X0130	XG.2001.209-6	534-52-1	4,6-Dinitro-2-methylphenol	ND	mg / Kg	1	0.3		02/15/01
X0130	XG.2001.209-6	101-55-3	4-Bromophenyl-phenylether	ND	mg / Kg	1	0.03		02/15/01
X0130	XG.2001.209-6	59-50-7	4-Chloro-3-methylphenol	ND	mg / Kg	1	0.3		02/15/01
X0130	XG.2001.209-6	106-47-8	4-Chloroaniline	ND	mg / Kg	1	0.3		02/15/01
X0130	XG.2001.209-6	7005-72-3	4-Chlorophenyl-phenylether	ND	mg / Kg	1	0.03		02/15/01
X0130	XG.2001.209-6	100-01-6	4-Nitroaniline	ND	mg / Kg	1	0.3		02/15/01
X0130	XG.2001.209-6	100-02-7	4-Nitrophenol	ND	mg / Kg	1	0.6		02/15/01
	XG.2001.209-6	83-32-9	Acenaphthene	ND	mg / Kg	1	0.03		02/15/01
[illegible]0	XG.2001.209-6	208-96-8	Acenaphthylene	ND	mg / Kg	1	0.03		02/15/01
X0130	XG.2001.209-6	62-53-3	Aniline	ND	mg / Kg	1	0.3		02/15/01
X0130	XG.2001.209-6	120-12-7	Anthracene	ND	mg / Kg	1	0.03		02/15/01
X0130	XG.2001.209-6		Azobenzene&1,2-Diphenylhydrazine	ND	mg / Kg	1	0.03		02/15/01
X0130	XG.2001.209-6	56-55-3	Benzo (a) anthracene	ND	mg / Kg	1	0.03		02/15/01
X0130	XG.2001.209-6	50-32-8	Benzo(a)pyrene	ND	mg / Kg	1	0.03		02/15/01
X0130	XG.2001.209-6		Benzo(b & k)fluoranthene	ND	mg / Kg	1	0.03		02/15/01
X0130	XG.2001.209-6	191-24-2	Benzo(g,h,i)perylene	ND	mg / Kg	1	0.3		02/15/01
X0130	XG.2001.209-6	64-85-0	Benzoic acid	ND	mg / Kg	1	3		02/15/01
X0130	XG.2001.209-6	100-51-6	Benzyl alcohol	ND	mg / Kg	1	1.5		02/15/01
X0130	XG.2001.209-6	111-44-4	bis (2-Chloroethyl) ether	ND	mg / Kg	1	0.03		02/15/01
X0130	XG.2001.209-6	111-91-1	bis(2-Chloroethoxy)methane	ND	mg / Kg	1	0.03		02/15/01
X0130	XG.2001.209-6	108-60-1	bis(2-Chloroisopropyl)ether	ND	mg / Kg	1	0.03		02/15/01
X0130	XG.2001.209-6	117-81-7	bis(2-Ethylhexyl)phthalate	1.0	mg / Kg	1	0.3		02/15/01
X0130	XG.2001.209-6	85-68-7	Butylbenzylphthalate	ND	mg / Kg	1	0.03		02/15/01
X0130	XG.2001.209-6	218-01-9	Chrysene	ND	mg / Kg	1	0.03		02/15/01
X0130	XG.2001.209-6	84-74-2	di-n-Butylphthalate	ND	mg / Kg	1	0.3		02/15/01
X0130	XG.2001.209-6	117-84-0	di-n-Octylpthalate	ND	mg / Kg	1	0.3		02/15/01
X0130	XG.2001.209-6	53-70-3	Dibenz(a,h)anthracene	ND	mg / Kg	1	0.3		02/15/01
X0130	XG.2001.209-6	132-64-9	Dibenzofuran	ND	mg / Kg	1	0.03		02/15/01
X0130	XG.2001.209-6	84-66-2	Diethylphthalate	ND	mg / Kg	1	0.03		02/15/01
X0130	XG.2001.209-6	131-11-3	Dimethylphthalate	ND	mg / Kg	1	0.03		02/15/01
X0130	XG.2001.209-6	206-44-0	Fluoranthene	ND	mg / Kg	1	0.03		02/15/01
X0130	XG.2001.209-6	86737	Fluorene	ND	mg / Kg	1	0.03		02/15/01
[illegible]0	XG.2001.209-6	118-74-1	Hexachlorobenzene	ND	mg / Kg	1	0.03		02/15/01

Certificate of Analysis

Client: **CH2MHILL**

Project: **0102137** **160660.02.FF.SA**

X0130	XG.2001.209-6	87-68-3	Hexachlorobutadiene	ND	mg / Kg	1	0.03		02/15/0
X0130	XG.2001.209-6	77-47-4	Hexachlorocyclopentadiene	ND	mg / Kg	1	1.5		02/15/0
X0130	XG.2001.209-6	67-72-1	Hexachloroethane	ND	mg / Kg	1	0.03		02/15/0
X0130	XG.2001.209-6	193-39-5	Indeno(1,2,3-cd)pyrene	ND	mg / Kg	1	0.3		02/15/0
X0130	XG.2001.209-6	78-59-1	Isophorone	ND	mg / Kg	1	0.03		02/15/0
X0130	XG.2001.209-6	621-64-7	n-Nitroso-di-n-propylamine	ND	mg / Kg	1	0.03		02/15/0
X0130	XG.2001.209-6	62-75-9	n-Nitroso-dimethyl-amine	ND	mg / Kg	1	0.3		02/15/0
X0130	XG.2001.209-6	86-30-6	n-Nitrosodiphenylamine	ND	mg / Kg	1	0.03		02/15/0
X0130	XG.2001.209-6	91-20-3	Naphthalene	ND	mg / Kg	1	0.03		02/15/0
X0130	XG.2001.209-6	98-95-3	Nitrobenzene	ND	mg / Kg	1	0.03		02/15/0
X0130	XG.2001.209-6	87-86-5	Pentachlorophenol	ND	mg / Kg	1	0.3		02/15/0
X0130	XG.2001.209-6	85-01-8	Phenanthrene	ND	mg / Kg	1	0.03		02/15/0
X0130	XG.2001.209-6	108-95-2	Phenol	ND	mg / Kg	1	0.3		02/15/0
X0130	XG.2001.209-6	129-00-0	Pyrene	ND	mg / Kg	1	0.03		02/15/0
X0130	XG.2001.209-6	110-86-1	Pyridine	ND	mg / Kg	1	0.3		02/15/0

Client Sample ID ***ST-106 SB28A 200'*** Sample Matrix ***SOIL*** Sample Collected ***02/13/01 12:05:00***

QC Group	Run Sequence	CAS #	Analyte	Result	Units	Dilution Factor	Detection Limit	Code	Run Date
0102137-02A		**SW846 5030A/8015A GRO by GC/FID**							
X0150	XG.2001.192-3		Gasoline Range Organics	ND	mg / Kg	1	0.25		02/13/
0102137-02B		**SW846 ME/8015A Diesel Range Organics by GC/FID**							
X0148	XG.2001.194-3		Diesel Range Organics	ND	mg / Kg	1	25		02/14/0

Client Sample ID ***ST-106 SB28A 220'*** Sample Matrix ***SOIL*** Sample Collected ***02/13/01 15:35:00***

QC Group	Run Sequence	CAS #	Analyte	Result	Units	Dilution Factor	Detection Limit	Code	Run Date
0102137-03A		**SW846 5030A/8015A GRO by GC/FID**							
X0150	XG.2001.192-4		Gasoline Range Organics	0.43	mg / Kg	1	0.25		02/13/0
0102137-03B		**SW846 ME/8015A Diesel Range Organics by GC/FID**							
X0148	XG.2001.194-4		Diesel Range Organics	43	mg / Kg	1	25		02/14/0

**** Sample specific Detection Limit is determined by multiplying the sample Dilution Factor by the listed Reporting Detection Limit. ****

**** ND = Not detected: less than the sample specific Detection Limit. Results relate only to the items tested. ****

Assaigai Analytical Laboratories, Inc.

Quality Control Summary

Explanation of codes

D	*Not applicable due to sample dilution*
L	*Not applicable due to MDL proximity*

Client: **CH2MHILL**

Project: **0102137** **160660.02.FF.SA**

QC Type **LCS: Lab Control Spike** QC Matrix **SOLID**

QC Group	Run Sequence	CAS #	Analyte	Result	Units	Dilution Factor	Detection Limit	Code	Run Date
X0148-002		**SW846 ME/8015A Diesel Range Organics by GC/FID**							
X0148	XG.2001.169-2		Diesel Range Organics	90	% Recovery	1	NA		02/07/01
X0155-017		**SW846 8260A Purgeable VOCs by GC/MS**							
X0155	XG.2001.202-11	75-34-3	1,1 Dichloroethene	115	% Recovery	1	NA		02/14/01
X0155	XG.2001.202-11	106-46-7	1,4 Dichlorobenzene	105	% Recovery	1	NA		02/14/01
X0155	XG.2001.202-11	71-43-2	Benzene	116	% Recovery	1	NA		02/14/01
X0155	XG.2001.202-11	108-90-7	Chlorobenzene	110	% Recovery	1	NA		02/14/01
X0155	XG.2001.202-11	108-88-3	Toluene	115	% Recovery	1	NA		02/14/01
X0155	XG.2001.202-11	79-01-6	Trichloroethene	111	% Recovery	1	NA		02/14/01

QC Type **LCSD: Lab Control Spike Duplicate Accuracy** QC Matrix **SOLID**

QC Group	Run Sequence	CAS #	Analyte	Result	Units	Dilution Factor	Detection Limit	Code	Run Date
[illegible]9-003		**SW846 ME/8015A Diesel Range Organics by GC/FID**							
[illegible]	XG.2001.169-3		Diesel Range Organics	91	% Recovery	1	NA		02/07/01
X0150-003		**SW846 5030A/8015A GRO by GC/FID**							
X0150	XG.2001.174-3		Gasoline Range Organics	92	% Recovery	1	NA		02/07/01
X0155-018		**SW846 8260A Purgeable VOCs by GC/MS**							
X0155	XG.2001.202-12	75-34-3	1,1 Dichloroethene	110	% Recovery	1	NA		02/14/01
X0155	XG.2001.202-12	106-46-7	1,4 Dichlorobenzene	104	% Recovery	1	NA		02/14/01
X0155	XG.2001.202-12	71-43-2	Benzene	113	% Recovery	1	NA		02/14/01
X0155	XG.2001.202-12	108-90-7	Chlorobenzene	107	% Recovery	1	NA		02/14/01
X0155	XG.2001.202-12	108-88-3	Toluene	113	% Recovery	1	NA		02/14/01
X0155	XG.2001.202-12	79-01-6	Trichloroethene	108	% Recovery	1	NA		02/14/01

QC Type **LCSD: Lab Control Spike Duplicate Precision** QC Matrix **SOLID**

QC Group	Run Sequence	CAS #	Analyte	Result	Units	Dilution Factor	Detection Limit	Code	Run Date
X0148-003		**SW846 ME/8015A Diesel Range Organics by GC/FID**							
X0148	XG.2001.169-3		Diesel Range Organics	1	RPD	1	NA		02/07/01
X0150-003		**SW846 5030A/8015A GRO by GC/FID**							
X0150	XG.2001.174-3		Gasoline Range Organics	7	RPD	1	NA		02/07/01
X0155-018		**SW846 8260A Purgeable VOCs by GC/MS**							
X0155	XG.2001.202-12	75-34-3	1,1 Dichloroethene	4	RPD	1	NA		02/14/01
[illegible]	XG.2001.202-12	106-46-7	1,4 Dichlorobenzene	< 1	RPD	1	NA		02/14/01
[illegible]	XG.2001.202-12	71-43-2	Benzene	2	RPD	1	NA		02/14/01

Quality Control Summary

Client: **CH2MHILL**

Project: **0102137** **160660.02.FF.SA**

Explanation of codes

D	*Not applicable due to sample diluti*
L	*Not applicable due to MDL proxim*

X0155	XG.2001.202-12	108-90-7	Chlorobenzene	3	RPD	1	NA		02/14/01
X0155	XG.2001.202-12	108-88-3	Toluene	2	RPD	1	NA		02/14/01
X0155	XG.2001.202-12	79-01-6	Trichloroethene	2	RPD	1	NA		02/14/01

QC Type **MB: Method Blank** QC Matrix **SOLID**

QC Group	Run Sequence	CAS #	Analyte	Result	Units	Dilution Factor	Detection Limit	Code	Run Date
X0130-012		**SW846 3550A/8270B SVOCs by GC/MS**							
X0130	XG.2001.209-1	120-82-1	1,2,4-Trichlorobenzene	ND	mg / Kg	1	0.03		02/15/01
X0130	XG.2001.209-1	95-50-1	1,2-Dichlorobenzene	ND	mg / Kg	1	0.03		02/15/01
X0130	XG.2001.209-1	541-73-1	1,3-Dichlorobenzene	ND	mg / Kg	1	0.03		02/15/01
X0130	XG.2001.209-1	106-46-7	1,4-Dichlorobenzene	ND	mg / Kg	1	0.03		02/15/01
X0130	XG.2001.209-1	90-12-0	1-Methylnaphthalene	ND	mg / Kg	1	0.03		02/15/01
X0130	XG.2001.209-1	58-90-2	2,3,4,6-Tetrachlorophenol	ND	mg / Kg	1	1.5		02/15/01
X0130	XG.2001.209-1	95-95-4	2,4,5-Trichlorophenol	ND	mg / Kg	1	0.3		02/15/01
X0130	XG.2001.209-1	88-06-2	2,4,6-Trichlorophenol	ND	mg / Kg	1	0.3		02/15/01
X0130	XG.2001.209-1	120-83-2	2,4-Dichlorophenol	ND	mg / Kg	1	0.3		02/15/01
X0130	XG.2001.209-1	105-67-9	2,4-Dimethylphenol	ND	mg / Kg	1	0.03		02/15/01
X0130	XG.2001.209-1	51-28-5	2,4-Dinitrophenol	ND	mg / Kg	1	0.67		02/15/01
X0130	XG.2001.209-1	121-14-2	2,4-Dinitrotoluene	ND	mg / Kg	1	0.3		02/15/01
X0130	XG.2001.209-1	606-20-2	2,6-Dinitrotoluene	ND	mg / Kg	1	0.3		02/15/0
X0130	XG.2001.209-1	91-58-7	2-Chloronaphthalene	ND	mg / Kg	1	0.03		02/1
X0130	XG.2001.209-1	95-57-8	2-Chlorophenol	ND	mg / Kg	1	0.03		02/15/0
X0130	XG.2001.209-1	91-57-6	2-Methylnaphthalene	ND	mg / Kg	1	0.03		02/15/01
X0130	XG.2001.209-1	95-48-7	2-Methylphenol	ND	mg / Kg	1	0.03		02/15/01
X0130	XG.2001.209-1	88-74-4	2-Nitroaniline	ND	mg / Kg	1	0.3		02/15/0
X0130	XG.2001.209-1	88-75-5	2-Nitrophenol	ND	mg / Kg	1	0.3		02/15/0
X0130	XG.2001.209-1		3+4 Methylphenol	ND	mg / Kg	1	0.03		02/15/0
X0130	XG.2001.209-1	91-94-1	3,3-Dichlorobenzidine	ND	mg / Kg	1	0.3		02/15/0
X0130	XG.2001.209-1	99-09-2	3-Nitroaniline	ND	mg / Kg	1	0.3		02/15/0
X0130	XG.2001.209-1	534-52-1	4,6-Dinitro-2-methylphenol	ND	mg / Kg	1	0.3		02/15/0
X0130	XG.2001.209-1	101-55-3	4-Bromophenyl-phenylether	ND	mg / Kg	1	0.03		02/15/0
X0130	XG.2001.209-1	59-50-7	4-Chloro-3-methylphenol	ND	mg / Kg	1	0.3		02/15/0
X0130	XG.2001.209-1	106-47-8	4-Chloroaniline	ND	mg / Kg	1	0.3		02/15/0
X0130	XG.2001.209-1	7005-72-3	4-Chlorophenyl-phenylether	ND	mg / Kg	1	0.03		02/15/0
X0130	XG.2001.209-1	100-01-6	4-Nitroaniline	ND	mg / Kg	1	0.3		02/15/0
X0130	XG.2001.209-1	100-02-7	4-Nitrophenol	ND	mg / Kg	1	0.6		02/15/0
X0130	XG.2001.209-1	83-32-9	Acenaphthene	ND	mg / Kg	1	0.03		02/15/0
X0130	XG.2001.209-1	208-96-8	Acenaphthylene	ND	mg / Kg	1	0.03		02/15/0
X0130	XG.2001.209-1	62-53-3	Aniline	ND	mg / Kg	1	0.3		02/15/01
X0130	XG.2001.209-1	120-12-7	Anthracene	ND	mg / Kg	1	0.03		02/15/01
X0130	XG.2001.209-1		Azobenzene&1,2-Diphenylhydrazine	ND	mg / Kg	1	0.03		02/15/01
X0130	XG.2001.209-1	56-55-3	Benzo (a) anthracene	ND	mg / Kg	1	0.03		02/15/01
X0130	XG.2001.209-1	50-32-8	Benzo(a)pyrene	ND	mg / Kg	1	0.03		02/15/01
X0130	XG.2001.209-1		Benzo(b & k)fluoranthene	ND	mg / Kg	1	0.03		02/15/01
X0130	XG.2001.209-1	191-24-2	Benzo(g,h,i)perylene	ND	mg / Kg	1	0.3		02/15/0
X0130	XG.2001.209-1	64-85-0	Benzoic acid	ND	mg / Kg	1	3		02/1

Quality Control Summary

Explanation of codes

D *Not applicable due to sample dilution*
L *Not applicable due to MDL proximity*

Client: **CH2MHILL**
Project: **0102137** **160660.02.FF.SA**

X0130	XG.2001.209-1	100-51-6	Benzyl alcohol	ND	mg / Kg	1	1.5		02/15/01
X0130	XG.2001.209-1	111-44-4	bis (2-Chloroethyl) ether	ND	mg / Kg	1	0.03		02/15/01
X0130	XG.2001.209-1	111-91-1	bis(2-Chloroethoxy)methane	ND	mg / Kg	1	0.03		02/15/01
X0130	XG.2001.209-1	108-60-1	bis(2-Chloroisopropyl)ether	ND	mg / Kg	1	0.03		02/15/01
X0130	XG.2001.209-1	117-81-7	bis(2-Ethylhexyl)phthalate	ND	mg / Kg	1	0.3		02/15/01
X0130	XG.2001.209-1	85-68-7	Butylbenzylphthalate	ND	mg / Kg	1	0.03		02/15/01
X0130	XG.2001.209-1	218-01-9	Chrysene	ND	mg / Kg	1	0.03		02/15/01
X0130	XG.2001.209-1	84-74-2	di-n-Butylphthalate	ND	mg / Kg	1	0.3		02/15/01
X0130	XG.2001.209-1	117-84-0	di-n-Octylpthalate	ND	mg / Kg	1	0.3		02/15/01
X0130	XG.2001.209-1	53-70-3	Dibenz(a,h)anthracene	ND	mg / Kg	1	0.3		02/15/01
X0130	XG.2001.209-1	132-64-9	Dibenzofuran	ND	mg / Kg	1	0.03		02/15/01
X0130	XG.2001.209-1	84-66-2	Diethylphthalate	ND	mg / Kg	1	0.03		02/15/01
X0130	XG.2001.209-1	131-11-3	Dimethylphthalate	ND	mg / Kg	1	0.03		02/15/01
X0130	XG.2001.209-1	206-44-0	Fluoranthene	ND	mg / Kg	1	0.03		02/15/01
X0130	XG.2001.209-1	86737	Fluorene	ND	mg / Kg	1	0.03		02/15/01
X0130	XG.2001.209-1	118-74-1	Hexachlorobenzene	ND	mg / Kg	1	0.03		02/15/01
X0130	XG.2001.209-1	87-68-3	Hexachlorobutadiene	ND	mg / Kg	1	0.03		02/15/01
X0130	XG.2001.209-1	77-47-4	Hexachlorocyclopentadiene	ND	mg / Kg	1	1.5		02/15/01
X0130	XG.2001.209-1	67-72-1	Hexachloroethane	ND	mg / Kg	1	0.03		02/15/01
X0130	XG.2001.209-1	193-39-5	Indeno(1,2,3-cd)pyrene	ND	mg / Kg	1	0.3		02/15/01
X0130	XG.2001.209-1	78-59-1	Isophorone	ND	mg / Kg	1	0.03		02/15/01
X0130	XG.2001.209-1	621-64-7	n-Nitroso-di-n-propylamine	ND	mg / Kg	1	0.03		02/15/01
X0130	XG.2001.209-1	62-75-9	n-Nitroso-dimethyl-amine	ND	mg / Kg	1	0.3		02/15/01
	XG.2001.209-1	86-30-6	n-Nitrosodiphenylamine	ND	mg / Kg	1	0.03		02/15/01
[illegible]	XG.2001.209-1	91-20-3	Naphthalene	ND	mg / Kg	1	0.03		02/15/01
X0130	XG.2001.209-1	98-95-3	Nitrobenzene	ND	mg / Kg	1	0.03		02/15/01
X0130	XG.2001.209-1	87-86-5	Pentachlorophenol	ND	mg / Kg	1	0.3		02/15/01
X0130	XG.2001.209-1	85-01-8	Phenanthrene	ND	mg / Kg	1	0.03		02/15/01
X0130	XG.2001.209-1	108-95-2	Phenol	ND	mg / Kg	1	0.3		02/15/01
X0130	XG.2001.209-1	129-00-0	Pyrene	ND	mg / Kg	1	0.03		02/15/01
X0130	XG.2001.209-1	110-86-1	Pyridine	ND	mg / Kg	1	0.3		02/15/01
X0148-001		**SW846 ME/8015A Diesel Range Organics by GC/FID**							
X0148	XG.2001.169-1		Diesel Range Organics	ND	mg / Kg	1	25		02/07/01
X0148-008		**SW846 ME/8015A Diesel Range Organics by GC/FID**							
X0148	XG.2001.175-1		Diesel Range Organics	ND	mg / Kg	1	25		02/08/01
X0148-011		**SW846 ME/8015A Diesel Range Organics by GC/FID**							
X0148	XG.2001.182-1		Diesel Range Organics	ND	mg / Kg	1	25		02/09/01
X0148-013		**SW846 ME/8015A Diesel Range Organics by GC/FID**							
X0148	XG.2001.194-1		Diesel Range Organics	ND	mg / Kg	1	25		02/14/01
X0148-017		**SW846 ME/8015A Diesel Range Organics by GC/FID**							
X0148	XG.2001.213-1		Diesel Range Organics	ND	mg / Kg	1	25		02/21/01
X0148-025		**SW846 ME/8015A Diesel Range Organics by GC/FID**							
X0148	XG.2001.239-1		Diesel Range Organics	ND	mg / Kg	1	25		02/27/01
X0148-026		**SW846 ME/8015A Diesel Range Organics by GC/FID**							
X0148	XG.2001.247-1		Diesel Range Organics	ND	mg / Kg	1	25		02/28/01
[illegible]0-001		**SW846 5030A/8015A GRO by GC/FID**							
X0150	XG.2001.174-1		Gasoline Range Organics	ND	mg / Kg	1	0.25		02/07/01

Quality Control Summary

Client: **CH2MHILL**

Project: **0102137** **160660.02.FF.SA**

Explanation of codes

D *Not applicable due to sample dilutio*

L *Not applicable due to MDL proxim*

X0150-008		**SW846 5030A/8015A GRO by GC/FID**							
X0150	XG.2001.183-1		Gasoline Range Organics	ND	mg / Kg	1	0.25		02/09/0
X0150-010		**SW846 5030A/8015A GRO by GC/FID**							
X0150	XG.2001.192-1		Gasoline Range Organics	ND	mg / Kg	1	0.25		02/13/0
X0150-014		**SW846 5030A/8015A GRO by GC/FID**							
X0150	XG.2001.214-1		Gasoline Range Organics	ND	mg / Kg	1	0.25		02/21/0
X0150-024		**SW846 5030A/8015A GRO by GC/FID**							
X0150	XG.2001.238-1		Gasoline Range Organics	ND	mg / Kg	1	0.25		02/27/0
X0150-027		**SW846 5030A/8015A GRO by GC/FID**							
X0150	XG.2001.246-1		Gasoline Range Organics	ND	mg / Kg	1	0.25		02/28/0
X0155-001		**SW846 8260A Purgeable VOCs by GC/MS**							
X0155	XG.2001.202-1	75-34-3	1,1 Dichloroethane	ND	mg / Kg	1	0.005		02/13/0
X0155	XG.2001.202-1	75-34-3	1,1 Dichloroethene	ND	mg / Kg	1	0.005		02/13/0
X0155	XG.2001.202-1	71-55-6	1,1,1 Trichloroethane	ND	mg / Kg	1	0.005		02/13/0
X0155	XG.2001.202-1	630-20-6	1,1,1,2 Tetrachloroethane	ND	mg / Kg	1	0.005		02/13/0
X0155	XG.2001.202-1	79-00-5	1,1,2 Trichloroethane	ND	mg / Kg	1	0.005		02/13/0
X0155	XG.2001.202-1	79-34-5	1,1,2,2 Tetrachloroethane	ND	mg / Kg	1	0.005		02/13/0
X0155	XG.2001.202-1	106-93-4	1,2 Dibromoethane (EDB)	ND	mg / Kg	1	0.005		02/13/0
X0155	XG.2001.202-1	95-50-1	1,2 Dichlorobenzene	ND	mg / Kg	1	0.005		02/13/0
X0155	XG.2001.202-1	107-06-2	1,2 Dichloroethane	ND	mg / Kg	1	0.005		02/13/0
X0155	XG.2001.202-1	78-87-5	1,2 Dichloropropane	ND	mg / Kg	1	0.005		02/13/0
X0155	XG.2001.202-1	96-18-4	1,2,3 Trichloropropane	ND	mg / Kg	1	0.005		02/13
X0155	XG.2001.202-1	95-63-6	1,2,4-Trimethylbenzene	ND	mg / Kg	1	0.005		02/13/0
X0155	XG.2001.202-1	541-73-1	1,3 Dichlorobenzene	ND	mg / Kg	1	0.005		02/13/0
X0155	XG.2001.202-1	108-67-8	1,3,5-Trimethylbenzene	ND	mg / Kg	1	0.005		02/13/0
X0155	XG.2001.202-1	764-41-0	1,4 Dichloro-2-butene	ND	mg / Kg	1	0.05		02/13/0
X0155	XG.2001.202-1	106-46-7	1,4 Dichlorobenzene	ND	mg / Kg	1	0.005		02/13/0
X0155	XG.2001.202-1	78-93-3	2-Butanone (MEK)	ND	mg / Kg	1	0.025		02/13/0
X0155	XG.2001.202-1	110-75-8	2-Chloroethylvinylether	ND	mg / Kg	1	0.025		02/13/0
X0155	XG.2001.202-1	591-78-6	2-Hexanone (MBK)	ND	mg / Kg	1	0.025		02/13/0
X0155	XG.2001.202-1	108-10-1	4-Methyl-2-pentanone (MIBK)	ND	mg / Kg	1	0.025		02/13/0
X0155	XG.2001.202-1	67-64-1	Acetone	ND	mg / Kg	1	0.05		02/13/0
X0155	XG.2001.202-1	107-02-8	Acrolein	ND	mg / Kg	1	0.1		02/13/0
X0155	XG.2001.202-1	107-13-1	Acrylonitrile	ND	mg / Kg	1	0.1		02/13/0
X0155	XG.2001.202-1	71-43-2	Benzene	ND	mg / Kg	1	0.005		02/13/0
X0155	XG.2001.202-1	75-27-4	Bromodichloromethane	ND	mg / Kg	1	0.005		02/13/0
X0155	XG.2001.202-1	75-25-2	Bromoform	ND	mg / Kg	1	0.005		02/13/0
X0155	XG.2001.202-1	74-83-9	Bromomethane	ND	mg / Kg	1	0.025		02/13/0
X0155	XG.2001.202-1	75-15-0	Carbon disulfide	ND	mg / Kg	1	0.025		02/13/0
X0155	XG.2001.202-1	56-23-5	Carbon tetrachloride	ND	mg / Kg	1	0.005		02/13/0
X0155	XG.2001.202-1	108-90-7	Chlorobenzene	ND	mg / Kg	1	0.005		02/13/0
X0155	XG.2001.202-1	124-48-1	Chlorodibromomethane	ND	mg / Kg	1	0.005		02/13/0
X0155	XG.2001.202-1	75-00-3	Chloroethane	ND	mg / Kg	1	0.025		02/13/0
X0155	XG.2001.202-1	67-66-3	Chloroform	ND	mg / Kg	1	0.005		02/13/0
X0155	XG.2001.202-1	74-87-3	Chloromethane	ND	mg / Kg	1	0.025		02/13/0
X0155	XG.2001.202-1	156-59-2	cis-1,2 dichloroethene	ND	mg / Kg	1	0.005		02/13/0
X0155	XG.2001.202-1	10061-01-5	cis-1,3 dichloropropene	ND	mg / Kg	1	0.005		02/13/
X0155	XG.2001.202-1	74-95-3	Dibromomethane	ND	mg / Kg	1	0.005		02/13

Quality Control Summary

Explanation of codes

D	*Not applicable due to sample dilution*
L	*Not applicable due to MDL proximity*

Client: **CH2MHILL**

Project: **0102137** **160660.02.FF.SA**

X0155	XG.2001.202-1	97-63-2	Ethyl methacrylate	ND	mg / Kg	1	0.025		02/13/01
X0155	XG.2001.202-1	100-41-4	Ethylbenzene	ND	mg / Kg	1	0.005		02/13/01
X0155	XG.2001.202-1		Freon 113	ND	mg / Kg	1	0.025		02/13/01
X0155	XG.2001.202-1	75-71-8	Freon 12	ND	mg / Kg	1	0.05		02/13/01
X0155	XG.2001.202-1	74-88-4	Iodomethane	ND	mg / Kg	1	0.025		02/13/01
X0155	XG.2001.202-1	1634-04-4	Methyl t-butyl ether (MTBE)	ND	mg / Kg	1	0.005		02/13/01
X0155	XG.2001.202-1	75-09-2	Methylene chloride	ND	mg / Kg	1	0.05		02/13/01
X0155	XG.2001.202-1	91-20-3	Naphthalene	ND	mg / Kg	1	0.025		02/13/01
X0155	XG.2001.202-1	95-47-6	o-Xylene	ND	mg / Kg	1	0.005		02/13/01
X0155	XG.2001.202-1	108-38-3/106-42	p/m Xylenes	ND	mg / Kg	1	0.01		02/13/01
X0155	XG.2001.202-1	100-42-5	Styrene	ND	mg / Kg	1	0.005		02/13/01
X0155	XG.2001.202-1	156-60-5	t-1,2 Dichloroethene	ND	mg / Kg	1	0.005		02/13/01
X0155	XG.2001.202-1	10061-02-6	t-1,3 Dichloropropene	ND	mg / Kg	1	0.005		02/13/01
X0155	XG.2001.202-1	127-18-4	Tetrachloroethene	ND	mg / Kg	1	0.005		02/13/01
X0155	XG.2001.202-1	108-88-3	Toluene	ND	mg / Kg	1	0.005		02/13/01
X0155	XG.2001.202-1	79-01-6	Trichloroethene	ND	mg / Kg	1	0.005		02/13/01
X0155	XG.2001.202-1	75-69-4	Trichlorofluoromethane	ND	mg / Kg	1	0.025		02/13/01
X0155	XG.2001.202-1	108-05-4	Vinyl acetate	ND	mg / Kg	1	0.025		02/13/01
X0155	XG.2001.202-1	75-01-4	Vinyl chloride	ND	mg / Kg	1	0.025		02/13/01
X0155-009		**SW846 8260A Purgeable VOCs by GC/MS**							
X0155	XG.2001.202-6	75-34-3	1,1 Dichloroethane	ND	mg / Kg	1	0.005		02/14/01
X0155	XG.2001.202-6	75-34-3	1,1 Dichloroethene	ND	mg / Kg	1	0.005		02/14/01
	XG.2001.202-6	71-55-6	1,1,1 Trichloroethane	ND	mg / Kg	1	0.005		02/14/01
X0155	XG.2001.202-6	630-20-6	1,1,1,2 Tetrachloroethane	ND	mg / Kg	1	0.005		02/14/01
X0155	XG.2001.202-6	79-00-5	1,1,2 Trichloroethane	ND	mg / Kg	1	0.005		02/14/01
X0155	XG.2001.202-6	79-34-5	1,1,2,2 Tetrachloroethane	ND	mg / Kg	1	0.005		02/14/01
X0155	XG.2001.202-6	106-93-4	1,2 Dibromoethane (EDB)	ND	mg / Kg	1	0.005		02/14/01
X0155	XG.2001.202-6	95-50-1	1,2 Dichlorobenzene	ND	mg / Kg	1	0.005		02/14/01
X0155	XG.2001.202-6	107-06-2	1,2 Dichloroethane	ND	mg / Kg	1	0.005		02/14/01
X0155	XG.2001.202-6	78-87-5	1,2 Dichloropropane	ND	mg / Kg	1	0.005		02/14/01
X0155	XG.2001.202-6	96-18-4	1,2,3 Trichloropropane	ND	mg / Kg	1	0.005		02/14/01
X0155	XG.2001.202-6	95-63-6	1,2,4-Trimethylbenzene	ND	mg / Kg	1	0.005		02/14/01
X0155	XG.2001.202-6	541-73-1	1,3 Dichlorobenzene	ND	mg / Kg	1	0.005		02/14/01
X0155	XG.2001.202-6	108-67-8	1,3,5-Trimethylbenzene	ND	mg / Kg	1	0.005		02/14/01
X0155	XG.2001.202-6	764-41-0	1,4 Dichloro-2-butene	ND	mg / Kg	1	0.05		02/14/01
X0155	XG.2001.202-6	106-46-7	1,4 Dichlorobenzene	ND	mg / Kg	1	0.005		02/14/01
X0155	XG.2001.202-6	78-93-3	2-Butanone (MEK)	ND	mg / Kg	1	0.025		02/14/01
X0155	XG.2001.202-6	110-75-8	2-Chloroethylvinylether	ND	mg / Kg	1	0.025		02/14/01
X0155	XG.2001.202-6	591-78-6	2-Hexanone (MBK)	ND	mg / Kg	1	0.025		02/14/01
X0155	XG.2001.202-6	108-10-1	4-Methyl-2-pentanone (MIBK)	ND	mg / Kg	1	0.025		02/14/01
X0155	XG.2001.202-6	67-64-1	Acetone	ND	mg / Kg	1	0.05		02/14/01
X0155	XG.2001.202-6	107-02-8	Acrolein	ND	mg / Kg	1	0.1		02/14/01
X0155	XG.2001.202-6	107-13-1	Acrylonitrile	ND	mg / Kg	1	0.1		02/14/01
X0155	XG.2001.202-6	71-43-2	Benzene	ND	mg / Kg	1	0.005		02/14/01
X0155	XG.2001.202-6	75-27-4	Bromodichloromethane	ND	mg / Kg	1	0.005		02/14/01
X0155	XG.2001.202-6	75-25-2	Bromoform	ND	mg / Kg	1	0.005		02/14/01
X0155	XG.2001.202-6	74-83-9	Bromomethane	ND	mg / Kg	1	0.025		02/14/01
[illegible]	XG.2001.202-6	75-15-0	Carbon disulfide	ND	mg / Kg	1	0.025		02/14/01
[illegible]	XG.2001.202-6	56-23-5	Carbon tetrachloride	ND	mg / Kg	1	0.005		02/14/01

Quality Control Summary

Client: **CH2MHILL**

Project: **0102137** **160660.02.FF.SA**

RECEIVED

Explanation of codes

D *Not applicable due to sample dilutio*

L *Not applicable due to MDL proximi*

X0155	XG.2001.202-6	108-90-7	Chlorobenzene	ND	mg / Kg	1	0.005	02/14/01
X0155	XG.2001.202-6	124-48-1	Chlorodibromomethane	ND	mg / Kg	1	0.005	02/14/01
X0155	XG.2001.202-6	75-00-3	Chloroethane	ND	mg / Kg	1	0.025	02/14/01
X0155	XG.2001.202-6	67-66-3	Chloroform	ND	mg / Kg	1	0.005	02/14/01
X0155	XG.2001.202-6	74-87-3	Chloromethane	ND	mg / Kg	1	0.025	02/14/01
X0155	XG.2001.202-6	156-59-2	cis-1,2 dichloroethene	ND	mg / Kg	1	0.005	02/14/01
X0155	XG.2001.202-6	10061-01-5	cis-1,3 dichloropropene	ND	mg / Kg	1	0.005	02/14/01
X0155	XG.2001.202-6	74-95-3	Dibromomethane	ND	mg / Kg	1	0.005	02/14/01
X0155	XG.2001.202-6	97-63-2	Ethyl methacrylate	ND	mg / Kg	1	0.025	02/14/01
X0155	XG.2001.202-6	100-41-4	Ethylbenzene	ND	mg / Kg	1	0.005	02/14/01
X0155	XG.2001.202-6		Freon 113	ND	mg / Kg	1	0.025	02/14/01
X0155	XG.2001.202-6	75-71-8	Freon 12	ND	mg / Kg	1	0.05	02/14/01
X0155	XG.2001.202-6	74-88-4	Iodomethane	ND	mg / Kg	1	0.025	02/14/01
X0155	XG.2001.202-6	1634-04-4	Methyl t-butyl ether (MTBE)	ND	mg / Kg	1	0.005	02/14/01
X0155	XG.2001.202-6	75-09-2	Methylene chloride	ND	mg / Kg	1	0.05	02/14/01
X0155	XG.2001.202-6	91-20-3	Naphthalene	ND	mg / Kg	1	0.025	02/14/01
X0155	XG.2001.202-6	95-47-6	o-Xylene	ND	mg / Kg	1	0.005	02/14/01
X0155	XG.2001.202-6	108-38-3/106-42	p/m Xylenes	ND	mg / Kg	1	0.01	02/14/01
X0155	XG.2001.202-6	100-42-5	Styrene	ND	mg / Kg	1	0.005	02/14/01
X0155	XG.2001.202-6	156-60-5	t-1,2 Dichloroethene	ND	mg / Kg	1	0.005	02/14/01
X0155	XG.2001.202-6	10061-02-6	t-1,3 Dichloropropene	ND	mg / Kg	1	0.005	02/14/01
X0155	XG.2001.202-6	127-18-4	Tetrachloroethene	ND	mg / Kg	1	0.005	02/14/01
X0155	XG.2001.202-6	108-88-3	Toluene	ND	mg / Kg	1	0.005	02/14/01
X0155	XG.2001.202-6	79-01-6	Trichloroethene	ND	mg / Kg	1	0.005	02/14
X0155	XG.2001.202-6	75-69-4	Trichlorofluoromethane	ND	mg / Kg	1	0.025	02/14/0
X0155	XG.2001.202-6	108-05-4	Vinyl acetate	ND	mg / Kg	1	0.025	02/14/01
X0155	XG.2001.202-6	75-01-4	Vinyl chloride	ND	mg / Kg	1	0.025	02/14/01
X0155-019		**SW846 8260A Purgeable VOCs by GC/MS**						
X0155	XG.2001.202-13	75-34-3	1,1 Dichloroethane	ND	mg / Kg	1	0.005	02/15/01
X0155	XG.2001.202-13	75-34-3	1,1 Dichloroethene	ND	mg / Kg	1	0.005	02/15/01
X0155	XG.2001.202-13	71-55-6	1,1,1 Trichloroethane	ND	mg / Kg	1	0.005	02/15/01
X0155	XG.2001.202-13	630-20-6	1,1,1,2 Tetrachloroethane	ND	mg / Kg	1	0.005	02/15/01
X0155	XG.2001.202-13	79-00-5	1,1,2 Trichloroethane	ND	mg / Kg	1	0.005	02/15/01
X0155	XG.2001.202-13	79-34-5	1,1,2,2 Tetrachloroethane	ND	mg / Kg	1	0.005	02/15/01
X0155	XG.2001.202-13	106-93-4	1,2 Dibromoethane (EDB)	ND	mg / Kg	1	0.005	02/15/01
X0155	XG.2001.202-13	95-50-1	1,2 Dichlorobenzene	ND	mg / Kg	1	0.005	02/15/01
X0155	XG.2001.202-13	107-06-2	1,2 Dichloroethane	ND	mg / Kg	1	0.005	02/15/01
X0155	XG.2001.202-13	78-87-5	1,2 Dichloropropane	ND	mg / Kg	1	0.005	02/15/01
X0155	XG.2001.202-13	96-18-4	1,2,3 Trichloropropane	ND	mg / Kg	1	0.005	02/15/01
X0155	XG.2001.202-13	95-63-6	1,2,4-Trimethylbenzene	ND	mg / Kg	1	0.005	02/15/01
X0155	XG.2001.202-13	541-73-1	1,3 Dichlorobenzene	ND	mg / Kg	1	0.005	02/15/01
X0155	XG.2001.202-13	108-67-8	1,3,5-Trimethylbenzene	ND	mg / Kg	1	0.005	02/15/01
X0155	XG.2001.202-13	764-41-0	1,4 Dichloro-2-butene	ND	mg / Kg	1	0.05	02/15/01
X0155	XG.2001.202-13	106-46-7	1,4 Dichlorobenzene	ND	mg / Kg	1	0.005	02/15/01
X0155	XG.2001.202-13	78-93-3	2-Butanone (MEK)	ND	mg / Kg	1	0.025	02/15/01
X0155	XG.2001.202-13	110-75-8	2-Chloroethylvinylether	ND	mg / Kg	1	0.025	02/15/01
X0155	XG.2001.202-13	591-78-6	2-Hexanone (MBK)	ND	mg / Kg	1	0.025	02/15/01
X0155	XG.2001.202-13	108-10-1	4-Methyl-2-pentanone (MIBK)	ND	mg / Kg	1	0.025	02/15/01
X0155	XG.2001.202-13	67-64-1	Acetone	ND	mg / Kg	1	0.05	02/15

Quality Control Summary

Explanation of codes

D	*Not applicable due to sample dilution*
L	*Not applicable due to MDL proximity*

Client: **CH2MHILL**

Project: **0102137** **160660.02.FF.SA**

X0155	XG.2001.202-13	107-02-8	Acrolein	ND	mg / Kg	1	0.1		02/15/01
X0155	XG.2001.202-13	107-13-1	Acrylonitrile	ND	mg / Kg	1	0.1		02/15/01
X0155	XG.2001.202-13	71-43-2	Benzene	ND	mg / Kg	1	0.005		02/15/01
X0155	XG.2001.202-13	75-27-4	Bromodichloromethane	ND	mg / Kg	1	0.005		02/15/01
X0155	XG.2001.202-13	75-25-2	Bromoform	ND	mg / Kg	1	0.005		02/15/01
X0155	XG.2001.202-13	74-83-9	Bromomethane	ND	mg / Kg	1	0.025		02/15/01
X0155	XG.2001.202-13	75-15-0	Carbon disulfide	ND	mg / Kg	1	0.025		02/15/01
X0155	XG.2001.202-13	56-23-5	Carbon tetrachloride	ND	mg / Kg	1	0.005		02/15/01
X0155	XG.2001.202-13	108-90-7	Chlorobenzene	ND	mg / Kg	1	0.005		02/15/01
X0155	XG.2001.202-13	124-48-1	Chlorodibromomethane	ND	mg / Kg	1	0.005		02/15/01
X0155	XG.2001.202-13	75-00-3	Chloroethane	ND	mg / Kg	1	0.025		02/15/01
X0155	XG.2001.202-13	67-66-3	Chloroform	ND	mg / Kg	1	0.005		02/15/01
X0155	XG.2001.202-13	74-87-3	Chloromethane	ND	mg / Kg	1	0.025		02/15/01
X0155	XG.2001.202-13	156-59-2	cis-1,2 dichloroethene	ND	mg / Kg	1	0.005		02/15/01
X0155	XG.2001.202-13	10061-01-5	cis-1,3 dichloropropene	ND	mg / Kg	1	0.005		02/15/01
X0155	XG.2001.202-13	74-95-3	Dibromomethane	ND	mg / Kg	1	0.005		02/15/01
X0155	XG.2001.202-13	97-63-2	Ethyl methacrylate	ND	mg / Kg	1	0.025		02/15/01
X0155	XG.2001.202-13	100-41-4	Ethylbenzene	ND	mg / Kg	1	0.005		02/15/01
X0155	XG.2001.202-13		Freon 113	ND	mg / Kg	1	0.025		02/15/01
X0155	XG.2001.202-13	75-71-8	Freon 12	ND	mg / Kg	1	0.05		02/15/01
X0155	XG.2001.202-13	74-88-4	Iodomethane	ND	mg / Kg	1	0.025		02/15/01
X0155	XG.2001.202-13	1634-04-4	Methyl t-butyl ether (MTBE)	ND	mg / Kg	1	0.005		02/15/01
X0155	XG.2001.202-13	75-09-2	Methylene chloride	ND	mg / Kg	1	0.05		02/15/01
	XG.2001.202-13	91-20-3	Naphthalene	ND	mg / Kg	1	0.025		02/15/01
X0155	XG.2001.202-13	95-47-6	o-Xylene	ND	mg / Kg	1	0.005		02/15/01
X0155	XG.2001.202-13	108-38-3/106-42	p/m Xylenes	ND	mg / Kg	1	0.01		02/15/01
X0155	XG.2001.202-13	100-42-5	Styrene	ND	mg / Kg	1	0.005		02/15/01
X0155	XG.2001.202-13	156-60-5	t-1,2 Dichloroethene	ND	mg / Kg	1	0.005		02/15/01
X0155	XG.2001.202-13	10061-02-6	t-1,3 Dichloropropene	ND	mg / Kg	1	0.005		02/15/01
X0155	XG.2001.202-13	127-18-4	Tetrachloroethene	ND	mg / Kg	1	0.005		02/15/01
X0155	XG.2001.202-13	108-88-3	Toluene	ND	mg / Kg	1	0.005		02/15/01
X0155	XG.2001.202-13	79-01-6	Trichloroethene	ND	mg / Kg	1	0.005		02/15/01
X0155	XG.2001.202-13	75-69-4	Trichlorofluoromethane	ND	mg / Kg	1	0.025		02/15/01
X0155	XG.2001.202-13	108-05-4	Vinyl acetate	ND	mg / Kg	1	0.025		02/15/01
X0155	XG.2001.202-13	75-01-4	Vinyl chloride	ND	mg / Kg	1	0.025		02/15/01

X0155-027 **SW846 8260A Purgeable VOCs by GC/MS**

X0155	XG.2001.216-1	75-34-3	1,1 Dichloroethane	ND	mg / Kg	1	0.005		02/19/01
X0155	XG.2001.216-1	75-34-3	1,1 Dichloroethene	ND	mg / Kg	1	0.005		02/19/01
X0155	XG.2001.216-1	71-55-6	1,1,1 Trichloroethane	ND	mg / Kg	1	0.005		02/19/01
X0155	XG.2001.216-1	630-20-6	1,1,1,2 Tetrachloroethane	ND	mg / Kg	1	0.005		02/19/01
X0155	XG.2001.216-1	79-00-5	1,1,2 Trichloroethane	ND	mg / Kg	1	0.005		02/19/01
X0155	XG.2001.216-1	79-34-5	1,1,2,2 Tetrachloroethane	ND	mg / Kg	1	0.005		02/19/01
X0155	XG.2001.216-1	106-93-4	1,2 Dibromoethane (EDB)	ND	mg / Kg	1	0.005		02/19/01
X0155	XG.2001.216-1	95-50-1	1,2 Dichlorobenzene	ND	mg / Kg	1	0.005		02/19/01
X0155	XG.2001.216-1	107-06-2	1,2 Dichloroethane	ND	mg / Kg	1	0.005		02/19/01
X0155	XG.2001.216-1	78-87-5	1,2 Dichloropropane	ND	mg / Kg	1	0.005		02/19/01
X0155	XG.2001.216-1	96-18-4	1,2,3 Trichloropropane	ND	mg / Kg	1	0.005		02/19/01
X0155	XG.2001.216-1	95-63-6	1,2,4-Trimethylbenzene	ND	mg / Kg	1	0.005		02/19/01
X0155	XG.2001.216-1	541-73-1	1,3 Dichlorobenzene	ND	mg / Kg	1	0.005		02/19/01

Quality Control Summary

Client: **CH2MHILL**

Project: **0102137** **160660.02.FF.SA**

Explanation of codes

D *Not applicable due to sample diluti*

L *Not applicable due to MDL proxima*

X0155	XG.2001.216-1	108-67-8	1,3,5-Trimethylbenzene	ND	mg / Kg	1	0.005		02/19/0
X0155	XG.2001.216-1	764-41-0	1,4 Dichloro-2-butene	ND	mg / Kg	1	0.05		02/19/0
X0155	XG.2001.216-1	106-46-7	1,4 Dichlorobenzene	ND	mg / Kg	1	0.005		02/19/0
X0155	XG.2001.216-1	78-93-3	2-Butanone (MEK)	ND	mg / Kg	1	0.025		02/19/0
X0155	XG.2001.216-1	110-75-8	2-Chloroethylvinylether	ND	mg / Kg	1	0.025		02/19/0
X0155	XG.2001.216-1	591-78-6	2-Hexanone (MBK)	ND	mg / Kg	1	0.025		02/19/0
X0155	XG.2001.216-1	108-10-1	4-Methyl-2-pentanone (MIBK)	ND	mg / Kg	1	0.025		02/19/0
X0155	XG.2001.216-1	67-64-1	Acetone	ND	mg / Kg	1	0.05		02/19/0
X0155	XG.2001.216-1	107-02-8	Acrolein	ND	mg / Kg	1	0.1		02/19/0
X0155	XG.2001.216-1	107-13-1	Acrylonitrile	ND	mg / Kg	1	0.1		02/19/0
X0155	XG.2001.216-1	71-43-2	Benzene	ND	mg / Kg	1	0.005		02/19/0
X0155	XG.2001.216-1	75-27-4	Bromodichloromethane	ND	mg / Kg	1	0.005		02/19/0
X0155	XG.2001.216-1	75-25-2	Bromoform	ND	mg / Kg	1	0.005		02/19/0
X0155	XG.2001.216-1	74-83-9	Bromomethane	ND	mg / Kg	1	0.025		02/19/0
X0155	XG.2001.216-1	75-15-0	Carbon disulfide	ND	mg / Kg	1	0.025		02/19/0
X0155	XG.2001.216-1	56-23-5	Carbon tetrachloride	ND	mg / Kg	1	0.005		02/19/0
X0155	XG.2001.216-1	108-90-7	Chlorobenzene	ND	mg / Kg	1	0.005		02/19/0
X0155	XG.2001.216-1	124-48-1	Chlorodibromomethane	ND	mg / Kg	1	0.005		02/19/0
X0155	XG.2001.216-1	75-00-3	Chloroethane	ND	mg / Kg	1	0.025		02/19/0
X0155	XG.2001.216-1	67-66-3	Chloroform	ND	mg / Kg	1	0.005		02/19/0
X0155	XG.2001.216-1	74-87-3	Chloromethane	ND	mg / Kg	1	0.025		02/19/0
X0155	XG.2001.216-1	156-59-2	cis-1,2 dichloroethene	ND	mg / Kg	1	0.005		02/19/0
X0155	XG.2001.216-1	10061-01-5	cis-1,3 dichloropropene	ND	mg / Kg	1	0.005		02/19/0
X0155	XG.2001.216-1	74-95-3	Dibromomethane	ND	mg / Kg	1	0.005		02/19
X0155	XG.2001.216-1	97-63-2	Ethyl methacrylate	ND	mg / Kg	1	0.025		02/19
X0155	XG.2001.216-1	100-41-4	Ethylbenzene	ND	mg / Kg	1	0.005		02/19/0
X0155	XG.2001.216-1		Freon 113	ND	mg / Kg	1	0.025		02/19/0
X0155	XG.2001.216-1	75-71-8	Freon 12	ND	mg / Kg	1	0.05		02/19/0
X0155	XG.2001.216-1	74-88-4	Iodomethane	ND	mg / Kg	1	0.025		02/19/0
X0155	XG.2001.216-1	1634-04-4	Methyl t-butyl ether (MTBE)	ND	mg / Kg	1	0.005		02/19/0
X0155	XG.2001.216-1	75-09-2	Methylene chloride	ND	mg / Kg	1	0.05		02/19/0
X0155	XG.2001.216-1	91-20-3	Naphthalene	ND	mg / Kg	1	0.025		02/19/0
X0155	XG.2001.216-1	95-47-6	o-Xylene	ND	mg / Kg	1	0.005		02/19/0
X0155	XG.2001.216-1	108-38-3/106-42	p/m Xylenes	ND	mg / Kg	1	0.01		02/19/0
X0155	XG.2001.216-1	100-42-5	Styrene	ND	mg / Kg	1	0.005		02/19/0
X0155	XG.2001.216-1	156-60-5	t-1,2 Dichloroethene	ND	mg / Kg	1	0.005		02/19/0
X0155	XG.2001.216-1	10061-02-6	t-1,3 Dichloropropene	ND	mg / Kg	1	0.005		02/19/0
X0155	XG.2001.216-1	127-18-4	Tetrachloroethene	ND	mg / Kg	1	0.005		02/19/0
X0155	XG.2001.216-1	108-88-3	Toluene	0.009	mg / Kg	1	0.005		02/19/0
X0155	XG.2001.216-1	79-01-6	Trichloroethene	ND	mg / Kg	1	0.005		02/19/0
X0155	XG.2001.216-1	75-69-4	Trichlorofluoromethane	ND	mg / Kg	1	0.025		02/19/0
X0155	XG.2001.216-1	108-05-4	Vinyl acetate	ND	mg / Kg	1	0.025		02/19/0
X0155	XG.2001.216-1	75-01-4	Vinyl chloride	ND	mg / Kg	1	0.025		02/19/0
X0155-035		**SW846 8260A Purgeable VOCs by GC/MS**							
X0155	XG.2001.216-9	75-34-3	1,1 Dichloroethane	ND	mg / Kg	1	0.005		02/20/0
X0155	XG.2001.216-9	75-34-3	1,1 Dichloroethene	ND	mg / Kg	1	0.005		02/20/0
X0155	XG.2001.216-9	71-55-6	1,1,1 Trichloroethane	ND	mg / Kg	1	0.005		02/20/0
X0155	XG.2001.216-9	630-20-6	1,1,1,2 Tetrachloroethane	ND	mg / Kg	1	0.005		02/20/0
X0155	XG.2001.216-9	79-00-5	1,1,2 Trichloroethane	ND	mg / Kg	1	0.005		02/2(

Quality Control Summary

Explanation of codes

D	*Not applicable due to sample dilution*
L	*Not applicable due to MDL proximity*

Client: **CH2MHILL**

Project: **0102137** **160660.02.FF.SA**

X0155	XG.2001.216-9	79-34-5	1,1,2,2 Tetrachloroethane	ND	mg / Kg	1	0.005		02/20/01
X0155	XG.2001.216-9	106-93-4	1,2 Dibromoethane (EDB)	ND	mg / Kg	1	0.005		02/20/01
X0155	XG.2001.216-9	95-50-1	1,2 Dichlorobenzene	ND	mg / Kg	1	0.005		02/20/01
X0155	XG.2001.216-9	107-06-2	1,2 Dichloroethane	ND	mg / Kg	1	0.005		02/20/01
X0155	XG.2001.216-9	78-87-5	1,2 Dichloropropane	ND	mg / Kg	1	0.005		02/20/01
X0155	XG.2001.216-9	96-18-4	1,2,3 Trichloropropane	ND	mg / Kg	1	0.005		02/20/01
X0155	XG.2001.216-9	95-63-6	1,2,4-Trimethylbenzene	ND	mg / Kg	1	0.005		02/20/01
X0155	XG.2001.216-9	541-73-1	1,3 Dichlorobenzene	ND	mg / Kg	1	0.005		02/20/01
X0155	XG.2001.216-9	108-67-8	1,3,5-Trimethylbenzene	ND	mg / Kg	1	0.005		02/20/01
X0155	XG.2001.216-9	764-41-0	1,4 Dichloro-2-butene	ND	mg / Kg	1	0.05		02/20/01
X0155	XG.2001.216-9	106-46-7	1,4 Dichlorobenzene	ND	mg / Kg	1	0.005		02/20/01
X0155	XG.2001.216-9	78-93-3	2-Butanone (MEK)	ND	mg / Kg	1	0.025		02/20/01
X0155	XG.2001.216-9	110-75-8	2-Chloroethylvinylether	ND	mg / Kg	1	0.025		02/20/01
X0155	XG.2001.216-9	591-78-6	2-Hexanone (MBK)	ND	mg / Kg	1	0.025		02/20/01
X0155	XG.2001.216-9	108-10-1	4-Methyl-2-pentanone (MIBK)	ND	mg / Kg	1	0.025		02/20/01
X0155	XG.2001.216-9	67-64-1	Acetone	ND	mg / Kg	1	0.05		02/20/01
X0155	XG.2001.216-9	107-02-8	Acrolein	ND	mg / Kg	1	0.1		02/20/01
X0155	XG.2001.216-9	107-13-1	Acrylonitrile	ND	mg / Kg	1	0.1		02/20/01
X0155	XG.2001.216-9	71-43-2	Benzene	ND	mg / Kg	1	0.005		02/20/01
X0155	XG.2001.216-9	75-27-4	Bromodichloromethane	ND	mg / Kg	1	0.005		02/20/01
X0155	XG.2001.216-9	75-25-2	Bromoform	ND	mg / Kg	1	0.005		02/20/01
X0155	XG.2001.216-9	74-83-9	Bromomethane	ND	mg / Kg	1	0.025		02/20/01
X0155	XG.2001.216-9	75-15-0	Carbon disulfide	ND	mg / Kg	1	0.025		02/20/01
	XG.2001.216-9	56-23-5	Carbon tetrachloride	ND	mg / Kg	1	0.005		02/20/01
[illegible]	XG.2001.216-9	108-90-7	Chlorobenzene	ND	mg / Kg	1	0.005		02/20/01
X0155	XG.2001.216-9	124-48-1	Chlorodibromomethane	ND	mg / Kg	1	0.005		02/20/01
X0155	XG.2001.216-9	75-00-3	Chloroethane	ND	mg / Kg	1	0.025		02/20/01
X0155	XG.2001.216-9	67-66-3	Chloroform	ND	mg / Kg	1	0.005		02/20/01
X0155	XG.2001.216-9	74-87-3	Chloromethane	ND	mg / Kg	1	0.025		02/20/01
X0155	XG.2001.216-9	156-59-2	cis-1,2 dichloroethene	ND	mg / Kg	1	0.005		02/20/01
X0155	XG.2001.216-9	10061-01-5	cis-1,3 dichloropropene	ND	mg / Kg	1	0.005		02/20/01
X0155	XG.2001.216-9	74-95-3	Dibromomethane	ND	mg / Kg	1	0.005		02/20/01
X0155	XG.2001.216-9	97-63-2	Ethyl methacrylate	ND	mg / Kg	1	0.025		02/20/01
X0155	XG.2001.216-9	100-41-4	Ethylbenzene	ND	mg / Kg	1	0.005		02/20/01
X0155	XG.2001.216-9		Freon 113	ND	mg / Kg	1	0.025		02/20/01
X0155	XG.2001.216-9	75-71-8	Freon 12	ND	mg / Kg	1	0.05		02/20/01
X0155	XG.2001.216-9	74-88-4	Iodomethane	ND	mg / Kg	1	0.025		02/20/01
X0155	XG.2001.216-9	1634-04-4	Methyl t-butyl ether (MTBE)	ND	mg / Kg	1	0.005		02/20/01
X0155	XG.2001.216-9	75-09-2	Methylene chloride	ND	mg / Kg	1	0.05		02/20/01
X0155	XG.2001.216-9	91-20-3	Naphthalene	ND	mg / Kg	1	0.025		02/20/01
X0155	XG.2001.216-9	95-47-6	o-Xylene	ND	mg / Kg	1	0.005		02/20/01
X0155	XG.2001.216-9	108-38-3/106-42	p/m Xylenes	ND	mg / Kg	1	0.01		02/20/01
X0155	XG.2001.216-9	100-42-5	Styrene	ND	mg / Kg	1	0.005		02/20/01
X0155	XG.2001.216-9	156-60-5	t-1,2 Dichloroethene	ND	mg / Kg	1	0.005		02/20/01
X0155	XG.2001.216-9	10061-02-6	t-1,3 Dichloropropene	ND	mg / Kg	1	0.005		02/20/01
X0155	XG.2001.216-9	127-18-4	Tetrachloroethene	ND	mg / Kg	1	0.005		02/20/01
X0155	XG.2001.216-9	108-88-3	Toluene	ND	mg / Kg	1	0.005		02/20/01
X0155	XG.2001.216-9	79-01-6	Trichloroethene	ND	mg / Kg	1	0.005		02/20/01
[illegible]	XG.2001.216-9	75-69-4	Trichlorofluoromethane	ND	mg / Kg	1	0.025		02/20/01
[illegible]	XG.2001.216-9	108-05-4	Vinyl acetate	ND	mg / Kg	1	0.025		02/20/01

Quality Control Summary

Client: **CH2MHILL**

Project: **0102137** **160660.02.FF.SA**

Explanation of codes

D *Not applicable due to sample dilut*

L *Not applicable due to MDL proxim*

X0155	XG.2001.216-9	75-01-4	Vinyl chloride	ND	mg / Kg	1	0.025		02/20/01
X0155-041		**SW846 8260A Purgeable VOCs by GC/MS**							
X0155	XG.2001.216-14	75-34-3	1,1 Dichloroethane	ND	mg / Kg	1	0.005		02/21/01
X0155	XG.2001.216-14	75-34-3	1,1 Dichloroethene	ND	mg / Kg	1	0.005		02/21/01
X0155	XG.2001.216-14	71-55-6	1,1,1 Trichloroethane	ND	mg / Kg	1	0.005		02/21/01
X0155	XG.2001.216-14	630-20-6	1,1,1,2 Tetrachloroethane	ND	mg / Kg	1	0.005		02/21/01
X0155	XG.2001.216-14	79-00-5	1,1,2 Trichloroethane	ND	mg / Kg	1	0.005		02/21/01
X0155	XG.2001.216-14	79-34-5	1,1,2,2 Tetrachloroethane	ND	mg / Kg	1	0.005		02/21/01
X0155	XG.2001.216-14	106-93-4	1,2 Dibromoethane (EDB)	ND	mg / Kg	1	0.005		02/21/01
X0155	XG.2001.216-14	95-50-1	1,2 Dichlorobenzene	ND	mg / Kg	1	0.005		02/21/01
X0155	XG.2001.216-14	107-06-2	1,2 Dichloroethane	ND	mg / Kg	1	0.005		02/21/01
X0155	XG.2001.216-14	78-87-5	1,2 Dichloropropane	ND	mg / Kg	1	0.005		02/21/01
X0155	XG.2001.216-14	96-18-4	1,2,3 Trichloropropane	ND	mg / Kg	1	0.005		02/21/01
X0155	XG.2001.216-14	95-63-6	1,2,4-Trimethylbenzene	ND	mg / Kg	1	0.005		02/21/01
X0155	XG.2001.216-14	541-73-1	1,3 Dichlorobenzene	ND	mg / Kg	1	0.005		02/21/01
X0155	XG.2001.216-14	108-67-8	1,3,5-Trimethylbenzene	ND	mg / Kg	1	0.005		02/21/01
X0155	XG.2001.216-14	764-41-0	1,4 Dichloro-2-butene	ND	mg / Kg	1	0.05		02/21/01
X0155	XG.2001.216-14	106-46-7	1,4 Dichlorobenzene	ND	mg / Kg	1	0.005		02/21/01
X0155	XG.2001.216-14	78-93-3	2-Butanone (MEK)	ND	mg / Kg	1	0.025		02/21/01
X0155	XG.2001.216-14	110-75-8	2-Chloroethylvinylether	ND	mg / Kg	1	0.025		02/21/01
X0155	XG.2001.216-14	591-78-6	2-Hexanone (MBK)	ND	mg / Kg	1	0.025		02/21/01
X0155	XG.2001.216-14	108-10-1	4-Methyl-2-pentanone (MIBK)	ND	mg / Kg	1	0.025		02/21/01
X0155	XG.2001.216-14	67-64-1	Acetone	ND	mg / Kg	1	0.05		02/21/01
X0155	XG.2001.216-14	107-02-8	Acrolein	ND	mg / Kg	1	0.1		02/21
X0155	XG.2001.216-14	107-13-1	Acrylonitrile	ND	mg / Kg	1	0.1		02/21/0
X0155	XG.2001.216-14	71-43-2	Benzene	ND	mg / Kg	1	0.005		02/21/01
X0155	XG.2001.216-14	75-27-4	Bromodichloromethane	ND	mg / Kg	1	0.005		02/21/01
X0155	XG.2001.216-14	75-25-2	Bromoform	ND	mg / Kg	1	0.005		02/21/01
X0155	XG.2001.216-14	74-83-9	Bromomethane	ND	mg / Kg	1	0.025		02/21/01
X0155	XG.2001.216-14	75-15-0	Carbon disulfide	ND	mg / Kg	1	0.025		02/21/01
X0155	XG.2001.216-14	56-23-5	Carbon tetrachloride	ND	mg / Kg	1	0.005		02/21/01
X0155	XG.2001.216-14	108-90-7	Chlorobenzene	ND	mg / Kg	1	0.005		02/21/01
X0155	XG.2001.216-14	124-48-1	Chlorodibromomethane	ND	mg / Kg	1	0.005		02/21/01
X0155	XG.2001.216-14	75-00-3	Chloroethane	ND	mg / Kg	1	0.025		02/21/01
X0155	XG.2001.216-14	67-66-3	Chloroform	ND	mg / Kg	1	0.005		02/21/01
X0155	XG.2001.216-14	74-87-3	Chloromethane	ND	mg / Kg	1	0.025		02/21/01
X0155	XG.2001.216-14	156-59-2	cis-1,2 dichloroethene	ND	mg / Kg	1	0.005		02/21/01
X0155	XG.2001.216-14	10061-01-5	cis-1,3 dichloropropene	ND	mg / Kg	1	0.005		02/21/01
X0155	XG.2001.216-14	74-95-3	Dibromomethane	ND	mg / Kg	1	0.005		02/21/01
X0155	XG.2001.216-14	97-63-2	Ethyl methacrylate	ND	mg / Kg	1	0.025		02/21/01
X0155	XG.2001.216-14	100-41-4	Ethylbenzene	ND	mg / Kg	1	0.005		02/21/01
X0155	XG.2001.216-14		Freon 113	ND	mg / Kg	1	0.025		02/21/01
X0155	XG.2001.216-14	75-71-8	Freon 12	ND	mg / Kg	1	0.05		02/21/01
X0155	XG.2001.216-14	74-88-4	Iodomethane	ND	mg / Kg	1	0.025		02/21/01
X0155	XG.2001.216-14	1634-04-4	Methyl t-butyl ether (MTBE)	ND	mg / Kg	1	0.005		02/21/01
X0155	XG.2001.216-14	75-09-2	Methylene chloride	ND	mg / Kg	1	0.05		02/21/01
X0155	XG.2001.216-14	91-20-3	Naphthalene	ND	mg / Kg	1	0.025		02/21/01
X0155	XG.2001.216-14	95-47-6	o-Xylene	ND	mg / Kg	1	0.005		02/21/01
X0155	XG.2001.216-14	108-38-3/106-42	p/m Xylenes	ND	mg / Kg	1	0.01		02/21/

Explanation of codes

D	*Not applicable due to sample dilution*
L	*Not applicable due to MDL proximity*

Client: **CH2MHILL**

Project: **0102137** **160660.02.FF.SA**

X0155	XG.2001.216-14	100-42-5	Styrene	ND	mg / Kg	1	0.005		02/21/01
X0155	XG.2001.216-14	156-60-5	t-1,2 Dichloroethene	ND	mg / Kg	1	0.005		02/21/01
X0155	XG.2001.216-14	10061-02-6	t-1,3 Dichloropropene	ND	mg / Kg	1	0.005		02/21/01
X0155	XG.2001.216-14	127-18-4	Tetrachloroethene	ND	mg / Kg	1	0.005		02/21/01
X0155	XG.2001.216-14	108-88-3	Toluene	ND	mg / Kg	1	0.005		02/21/01
X0155	XG.2001.216-14	79-01-6	Trichloroethene	ND	mg / Kg	1	0.005		02/21/01
X0155	XG.2001.216-14	75-69-4	Trichlorofluoromethane	ND	mg / Kg	1	0.025		02/21/01
X0155	XG.2001.216-14	108-05-4	Vinyl acetate	ND	mg / Kg	1	0.025		02/21/01
X0155	XG.2001.216-14	75-01-4	Vinyl chloride	ND	mg / Kg	1	0.025		02/21/01

QC Type **MD: Matrix Duplicate** QC Matrix **SOLID**

QC Group	Run Sequence	CAS #	Analyte	Result	Units	Dilution Factor	Detection Limit	Code	Run Date
X0130-024		**SW846 3550A/8270B SVOCs by GC/MS**							
X0130	XG.2001.209-9	120-82-1	1,2,4-Trichlorobenzene	5	RPD	7	NA		02/15/01
X0130	XG.2001.209-9	101-55-3	4-Bromophenyl-phenylether	7	RPD	7	NA		02/15/01
X0130	XG.2001.209-9	7005-72-3	4-Chlorophenyl-phenylether	6	RPD	7	NA		02/15/01
X0130	XG.2001.209-9	83-32-9	Acenaphthene	5	RPD	7	NA		02/15/01
X0130	XG.2001.209-9	208-96-8	Acenaphthylene	6	RPD	7	NA		02/15/01
X0130	XG.2001.209-9	120-12-7	Anthracene	7	RPD	7	NA		02/15/01
[illegible]	XG.2001.209-9	117-81-7	bis(2-Ethylhexyl)phthalate	6	RPD	7	NA		02/15/01
[illegible]	XG.2001.209-9	84-74-2	di-n-Butylphthalate	7	RPD	7	NA		02/15/01
X0130	XG.2001.209-9	132-64-9	Dibenzofuran	4	RPD	7	NA		02/15/01
X0130	XG.2001.209-9	84-66-2	Diethylphthalate	7	RPD	7	NA		02/15/01
X0130	XG.2001.209-9	206-44-0	Fluoranthene	7	RPD	7	NA		02/15/01
X0130	XG.2001.209-9	118-74-1	Hexachlorobenzene	6	RPD	7	NA		02/15/01
X0130	XG.2001.209-9	67-72-1	Hexachloroethane	4	RPD	7	NA		02/15/01
X0130	XG.2001.209-9	91-20-3	Naphthalene	3	RPD	7	NA		02/15/01
X0130	XG.2001.209-9	98-95-3	Nitrobenzene	3	RPD	7	NA		02/15/01
X0130	XG.2001.209-9	85-01-8	Phenanthrene	7	RPD	7	NA		02/15/01
X0130	XG.2001.209-9	108-95-2	Phenol	4	RPD	7	NA		02/15/01

QC Type **MS: Matrix Spike** QC Matrix **SOLID**

QC Group	Run Sequence	CAS #	Analyte	Result	Units	Dilution Factor	Detection Limit	Code	Run Date
X0148-005		**SW846 ME/8015A Diesel Range Organics by GC/FID**							
X0148	XG.2001.169-5		Diesel Range Organics	99	% Recovery	1	NA		02/07/01
X0150-006		**SW846 5030A/8015A GRO by GC/FID**							
X0150	XG.2001.174-6		Gasoline Range Organics	94	% Recovery	1	NA		02/07/01
X0155-025		**SW846 8260A Purgeable VOCs by GC/MS**							
X0155	XG.2001.202-19	75-34-3	1,1 Dichloroethene	106	% Recovery	1	NA		02/15/01
X0155	XG.2001.202-19	106-46-7	1,4 Dichlorobenzene	100	% Recovery	1	NA		02/15/01
[illegible]	XG.2001.202-19	71-43-2	Benzene	106	% Recovery	1	NA		02/15/01
[illegible]	XG.2001.202-19	108-90-7	Chlorobenzene	103	% Recovery	1	NA		02/15/01

Quality Control Summary

RECEIVED MAR 0 5 2001

Client: CH2MHILL

Project: 0102137 160660.02.FF.SA

Explanation of codes	
D	Not applicable due to sample dilution
L	Not applicable due to MDL proximi.

X0155	XG.2001.202-19	108-88-3	Toluene	110	% Recovery	1	NA		02/15/01
X0155	XG.2001.202-19	79-01-6	Trichloroethene	101	% Recovery	1	NA		02/15/01

QC Type **MSD: Matrix Spike Duplicate Accuracy** QC Matrix **SOLID**

QC Group	Run Sequence	CAS #	Analyte	Result	Units	Dilution Factor	Detection Limit	Code	Run Date
X0148-006		**SW846 ME/8015A Diesel Range Organics by GC/FID**							
X0148	XG.2001.169-6		Diesel Range Organics	96	% Recovery	1	NA		02/07/01
X0150-007		**SW846 5030A/8015A GRO by GC/FID**							
X0150	XG.2001.174-7		Gasoline Range Organics	92	% Recovery	1	NA		02/07/01
X0155-026		**SW846 8260A Purgeable VOCs by GC/MS**							
X0155	XG.2001.202-20	75-34-3	1,1 Dichloroethene	108	% Recovery	1	NA		02/15/01
X0155	XG.2001.202-20	106-46-7	1,4 Dichlorobenzene	102	% Recovery	1	NA		02/15/01
X0155	XG.2001.202-20	71-43-2	Benzene	109	% Recovery	1	NA		02/15/01
X0155	XG.2001.202-20	108-90-7	Chlorobenzene	106	% Recovery	1	NA		02/15/01
X0155	XG.2001.202-20	108-88-3	Toluene	112	% Recovery	1	NA		02/15/01
X0155	XG.2001.202-20	79-01-6	Trichloroethene	104	% Recovery	1	NA		02/15/01

QC Type **MSD: Matrix Spike Duplicate Precision** QC Matrix **SOLID**

QC Group	Run Sequence	CAS #	Analyte	Result	Units	Dilution Factor	Detection Limit	Code	Run Date
X0148-006		**SW846 ME/8015A Diesel Range Organics by GC/FID**							
X0148	XG.2001.169-6		Diesel Range Organics	3	RPD	1	NA		02/07/01
X0150-007		**SW846 5030A/8015A GRO by GC/FID**							
X0150	XG.2001.174-7		Gasoline Range Organics	3	RPD	1	NA		02/07/01
X0155-026		**SW846 8260A Purgeable VOCs by GC/MS**							
X0155	XG.2001.202-20	75-34-3	1,1 Dichloroethene	2	RPD	1	NA		02/15/01
X0155	XG.2001.202-20	106-46-7	1,4 Dichlorobenzene	2	RPD	1	NA		02/15/01
X0155	XG.2001.202-20	71-43-2	Benzene	3	RPD	1	NA		02/15/01
X0155	XG.2001.202-20	108-90-7	Chlorobenzene	2	RPD	1	NA		02/15/01
X0155	XG.2001.202-20	108-88-3	Toluene	2	RPD	1	NA		02/15/01
X0155	XG.2001.202-20	79-01-6	Trichloroethene	3	RPD	1	NA		02/15/01

Surrogate Summary: QC

Client: **CH2MHILL**

Project: **0102137** **160660.02.FF.SA**

QC Type **LCS** QC Matrix **SOLID**

QC Group	Run Sequence	CAS #	Analyte	Result	Units	Dilution Factor	Detection Limit	Code	Run Date
X0148-002		**DRO**							
X0148	XG.2001.169-2	NA	O-terphenyl	102	% Recovery	1	NA		02/07/01
X0155-017		**8260**							
X0155	XG.2001.202-11	NA	1,2 Dichloroethane-D4 (SS)	110	% Recovery	1	NA		02/14/01
X0155	XG.2001.202-11	NA	4-Bromofluorobenzene (SS)	104	% Recovery	1	NA		02/14/01
X0155	XG.2001.202-11	NA	Dibromofluoromethane (SS)	105	% Recovery	1	NA		02/14/01
X0155	XG.2001.202-11	NA	Toluene-D8 (SS)	103	% Recovery	1	NA		02/14/01

QC Type **LCSD** QC Matrix **SOLID**

QC Group	Run Sequence	CAS #	Analyte	Result	Units	Dilution Factor	Detection Limit	Code	Run Date
X0148-003		**DRO**							
X0148	XG.2001.169-3	NA	O-terphenyl	104	% Recovery	1	NA		02/07/01
[illegible]-003		**GRO**							
X0150	XG.2001.174-3	NA	4-Bromofluorobenzene-FID	100	% Recovery	1	NA		02/07/01
X0150	XG.2001.174-3	NA	4-Bromofluorobenzene-PID	ND	% Recovery	1	NA		02/07/01
X0150	XG.2001.174-3	NA	aaa-Trifluorotoluene-FID	107	% Recovery	1	NA		02/07/01
X0150	XG.2001.174-3	NA	aaa-Trifluorotoluene-PID	ND	% Recovery	1	NA		02/07/01
X0155-018		**8260**							
X0155	XG.2001.202-12	NA	1,2 Dichloroethane-D4 (SS)	109	% Recovery	1	NA		02/14/01
X0155	XG.2001.202-12	NA	4-Bromofluorobenzene (SS)	104	% Recovery	1	NA		02/14/01
X0155	XG.2001.202-12	NA	Dibromofluoromethane (SS)	105	% Recovery	1	NA		02/14/01
X0155	XG.2001.202-12	NA	Toluene-D8 (SS)	103	% Recovery	1	NA		02/14/01

QC Type **MB** QC Matrix **SOLID**

QC Group	Run Sequence	CAS #	Analyte	Result	Units	Dilution Factor	Detection Limit	Code	Run Date
X0130-012		**8270**							
X0130	XG.2001.209-1	NA	*2,4,6-TRIBROMOPHENOL	88	% Recovery	1	NA		02/15/01
X0130	XG.2001.209-1	NA	*2-FLUOROBIPHENYL	81	% Recovery	1	NA		02/15/01
X0130	XG.2001.209-1	NA	*2-FLUOROPHENOL	73	% Recovery	1	NA		02/15/01
X0130	XG.2001.209-1	NA	*NITROBENZENE-D5	80	% Recovery	1	NA		02/15/01
X0130	XG.2001.209-1	NA	*PHENOL-D6	80	% Recovery	1	NA		02/15/01
X0130	XG.2001.209-1	NA	*TERPHENYL-D14	83	% Recovery	1	NA		02/15/01
[illegible]8-001		**DRO**							
[illegible]	XG.2001.169-1	NA	O-terphenyl	92	% Recovery	1	NA		02/07/01

Surrogate Summary: QC

Client: **CH2MHILL**

Project: **0102137** **160660.02.FF.SA**

X0148-008		DRO							
X0148	XG.2001.175-1	NA	O-terphenyl	92	% Recovery	1	NA		02/08/0
X0148-011		DRO							
X0148	XG.2001.182-1	NA	O-terphenyl	90	% Recovery	1	NA		02/09/0
X0148-013		DRO							
X0148	XG.2001.194-1	NA	O-terphenyl	87	% Recovery	1	NA		02/14/0
X0148-017		DRO							
X0148	XG.2001.213-1	NA	O-terphenyl	88	% Recovery	1	NA		02/21/0
X0148-025		DRO							
X0148	XG.2001.239-1	NA	O-terphenyl	88	% Recovery	1	NA		02/27/0
X0148-026		DRO							
X0148	XG.2001.247-1	NA	O-terphenyl	81	% Recovery	1	NA		02/28/0
X0150-001		GRO							
X0150	XG.2001.174-1	NA	4-Bromofluorobenzene-FID	87	% Recovery	1	NA		02/07/0
X0150	XG.2001.174-1	NA	4-Bromofluorobenzene-PID	ND	% Recovery	1	NA		02/07/0
X0150	XG.2001.174-1	NA	aaa-Trifluorotoluene-FID	102	% Recovery	1	NA		02/07/0
X0150	XG.2001.174-1	NA	aaa-Trifluorotoluene-PID	ND	% Recovery	1	NA		02/07/0
X0150-008		GRO							
X0150	XG.2001.183-1	NA	4-Bromofluorobenzene-FID	87	% Recovery	1	NA		02/09/0
X0150	XG.2001.183-1	NA	4-Bromofluorobenzene-PID	ND	% Recovery	1	NA		02/09/0
X0150	XG.2001.183-1	NA	aaa-Trifluorotoluene-FID	105	% Recovery	1	NA		02/09
X0150	XG.2001.183-1	NA	aaa-Trifluorotoluene-PID	ND	% Recovery	1	NA		02/09/0
X0150-010		GRO							
X0150	XG.2001.192-1	NA	4-Bromofluorobenzene-FID	90	% Recovery	1	NA		02/13/0
X0150	XG.2001.192-1	NA	4-Bromofluorobenzene-PID	ND	% Recovery	1	NA		02/13/0
X0150	XG.2001.192-1	NA	aaa-Trifluorotoluene-FID	105	% Recovery	1	NA		02/13/0
X0150	XG.2001.192-1	NA	aaa-Trifluorotoluene-PID	ND	% Recovery	1	NA		02/13/0
X0150-014		GRO							
X0150	XG.2001.214-1	NA	4-Bromofluorobenzene-FID	88	% Recovery	1	NA		02/21/0
X0150	XG.2001.214-1	NA	4-Bromofluorobenzene-PID	28	% Recovery	1	NA		02/21/0
X0150	XG.2001.214-1	NA	aaa-Trifluorotoluene-FID	102	% Recovery	1	NA		02/21/0
X0150	XG.2001.214-1	NA	aaa-Trifluorotoluene-PID	17	% Recovery	1	NA		02/21/0
X0150-024		GRO							
X0150	XG.2001.238-1	NA	4-Bromofluorobenzene-FID	90	% Recovery	1	NA		02/27/0
X0150	XG.2001.238-1	NA	4-Bromofluorobenzene-PID	437	% Recovery	1	NA		02/27/0
X0150	XG.2001.238-1	NA	aaa-Trifluorotoluene-FID	104	% Recovery	1	NA		02/27/0
X0150	XG.2001.238-1	NA	aaa-Trifluorotoluene-PID	116	% Recovery	1	NA		02/27/0
X0150-027		GRO							
X0150	XG.2001.246-1	NA	4-Bromofluorobenzene-FID	88	% Recovery	1	NA		02/28/0
X0150	XG.2001.246-1	NA	4-Bromofluorobenzene-PID	ND	% Recovery	1	NA		02/28/0
X0150	XG.2001.246-1	NA	aaa-Trifluorotoluene-FID	101	% Recovery	1	NA		02/28/0
X0150	XG.2001.246-1	NA	aaa-Trifluorotoluene-PID	77	% Recovery	1	NA		02/28/0
X0155-001		8260							
X0155	XG.2001.202-1	NA	1,2 Dichloroethane-D4 (SS)	97	% Recovery	1	NA		02/13

Surrogate Summary: QC

Client: CH2MHILL

Project: 0102137 160660.02.FF.SA

X0155	XG.2001.202-1	NA	4-Bromofluorobenzene (SS)	101	% Recovery	1	NA		02/13/01
X0155	XG.2001.202-1	NA	Dibromofluoromethane (SS)	100	% Recovery	1	NA		02/13/01
X0155	XG.2001.202-1	NA	Toluene-D8 (SS)	100	% Recovery	1	NA		02/13/01
X0155-009		8260							
X0155	XG.2001.202-6	NA	1,2 Dichloroethane-D4 (SS)	106	% Recovery	1	NA		02/14/01
X0155	XG.2001.202-6	NA	4-Bromofluorobenzene (SS)	104	% Recovery	1	NA		02/14/01
X0155	XG.2001.202-6	NA	Dibromofluoromethane (SS)	104	% Recovery	1	NA		02/14/01
X0155	XG.2001.202-6	NA	Toluene-D8 (SS)	103	% Recovery	1	NA		02/14/01
X0155-019		8260							
X0155	XG.2001.202-13	NA	1,2 Dichloroethane-D4 (SS)	102	% Recovery	1	NA		02/15/01
X0155	XG.2001.202-13	NA	4-Bromofluorobenzene (SS)	106	% Recovery	1	NA		02/15/01
X0155	XG.2001.202-13	NA	Dibromofluoromethane (SS)	103	% Recovery	1	NA		02/15/01
X0155	XG.2001.202-13	NA	Toluene-D8 (SS)	101	% Recovery	1	NA		02/15/01
X0155-027		8260							
X0155	XG.2001.216-1	NA	1,2 Dichloroethane-D4 (SS)	110	% Recovery	1	NA		02/19/01
X0155	XG.2001.216-1	NA	4-Bromofluorobenzene (SS)	108	% Recovery	1	NA		02/19/01
X0155	XG.2001.216-1	NA	Dibromofluoromethane (SS)	103	% Recovery	1	NA		02/19/01
X0155	XG.2001.216-1	NA	Toluene-D8 (SS)	101	% Recovery	1	NA		02/19/01
X0155-035		8260							
X0155	XG.2001.216-9	NA	1,2 Dichloroethane-D4 (SS)	90	% Recovery	1	NA		02/20/01
X0155	XG.2001.216-9	NA	4-Bromofluorobenzene (SS)	100	% Recovery	1	NA		02/20/01
[illegible]	XG.2001.216-9	NA	Dibromofluoromethane (SS)	99	% Recovery	1	NA		02/20/01
[illegible]	XG.2001.216-9	NA	Toluene-D8 (SS)	99	% Recovery	1	NA		02/20/01
X0155-041		8260							
X0155	XG.2001.216-14	NA	1,2 Dichloroethane-D4 (SS)	113	% Recovery	1	NA		02/21/01
X0155	XG.2001.216-14	NA	4-Bromofluorobenzene (SS)	105	% Recovery	1	NA		02/21/01
X0155	XG.2001.216-14	NA	Dibromofluoromethane (SS)	103	% Recovery	1	NA		02/21/01
X0155	XG.2001.216-14	NA	Toluene-D8 (SS)	102	% Recovery	1	NA		02/21/01

QC Type **MD** QC Matrix **SOLID**

QC Group	Run Sequence	CAS #	Analyte	Result	Units	Dilution Factor	Detection Limit	Code	Run Date
X0130-024		8270							
X0130	XG.2001.209-9	NA	*2,4,6-TRIBROMOPHENOL	81	% Recovery	7	NA		02/15/01
X0130	XG.2001.209-9	NA	*2-FLUOROBIPHENYL	90	% Recovery	7	NA		02/15/01
X0130	XG.2001.209-9	NA	*2-FLUOROPHENOL	70	% Recovery	7	NA		02/15/01
X0130	XG.2001.209-9	NA	*NITROBENZENE-D5	82	% Recovery	7	NA		02/15/01
X0130	XG.2001.209-9	NA	*PHENOL-D6	84	% Recovery	7	NA		02/15/01
X0130	XG.2001.209-9	NA	*TERPHENYL-D14	84	% Recovery	7	NA		02/15/01

Surrogate Summary: QC

Client: **CH2MHILL**

Project: **0102137** **160660.02.FF.SA**

QC Type **MS** QC Matrix **SOLID**

QC Group	Run Sequence	CAS #	Analyte	Result	Units	Dilution Factor	Detection Limit	Code	Run Date
X0148-005		DRO							
X0148	XG.2001.169-5	NA	O-terphenyl	107	% Recovery	1	NA		02/07/01
X0150-006		GRO							
X0150	XG.2001.174-6	NA	4-Bromofluorobenzene-FID	114	% Recovery	1	NA		02/07/01
X0150	XG.2001.174-6	NA	4-Bromofluorobenzene-PID	ND	% Recovery	1	NA		02/07/01
X0150	XG.2001.174-6	NA	aaa-Trifluorotoluene-FID	124	% Recovery	1	NA		02/07/01
X0150	XG.2001.174-6	NA	aaa-Trifluorotoluene-PID	ND	% Recovery	1	NA		02/07/01
X0155-025		8260							
X0155	XG.2001.202-19	NA	1,2 Dichloroethane-D4 (SS)	110	% Recovery	1	NA		02/15/01
X0155	XG.2001.202-19	NA	4-Bromofluorobenzene (SS)	104	% Recovery	1	NA		02/15/01
X0155	XG.2001.202-19	NA	Dibromofluoromethane (SS)	102	% Recovery	1	NA		02/15/01
X0155	XG.2001.202-19	NA	Toluene-D8 (SS)	102	% Recovery	1	NA		02/15/01

QC Type **MSD** QC Matrix **SOLID**

QC Group	Run Sequence	CAS #	Analyte	Result	Units	Dilution Factor	Detection Limit	Code	Run Date
X0148-006		DRO							
X0148	XG.2001.169-6	NA	O-terphenyl	108	% Recovery	1	NA		02/07/01
X0150-007		GRO							
X0150	XG.2001.174-7	NA	4-Bromofluorobenzene-FID	113	% Recovery	1	NA		02/07/01
X0150	XG.2001.174-7	NA	4-Bromofluorobenzene-PID	ND	% Recovery	1	NA		02/07/01
X0150	XG.2001.174-7	NA	aaa-Trifluorotoluene-FID	125	% Recovery	1	NA		02/07/01
X0150	XG.2001.174-7	NA	aaa-Trifluorotoluene-PID	ND	% Recovery	1	NA		02/07/01
X0155-026		8260							
X0155	XG.2001.202-20	NA	1,2 Dichloroethane-D4 (SS)	111	% Recovery	1	NA		02/15/01
X0155	XG.2001.202-20	NA	4-Bromofluorobenzene (SS)	103	% Recovery	1	NA		02/15/01
X0155	XG.2001.202-20	NA	Dibromofluoromethane (SS)	102	% Recovery	1	NA		02/15/01
X0155	XG.2001.202-20	NA	Toluene-D8 (SS)	102	% Recovery	1	NA		02/15/01

Assaigai Analytical Laboratories, Inc.

Surrogate Summary: Fraction

Client: CH2MHILL

ct: 0102137 160660.02.FF.SA

Client Sample ID **8430** Sample Matrix **SOIL**

QC Group	Run Sequence	CAS #	Analyte	Result	Units	Dilution Factor	Detection Limit	Code	Run Date
0102137-01A		GRO							**X0150-011**
X0150	XG.2001.192-2	NA	4-Bromofluorobenzene-FID	95	% Recovery	1	NA		02/13/01
X0150	XG.2001.192-2	NA	4-Bromofluorobenzene-PID	ND	% Recovery	1	NA		02/13/01
X0150	XG.2001.192-2	NA	aaa-Trifluorotoluene-FID	109	% Recovery	1	NA		02/13/01
X0150	XG.2001.192-2	NA	aaa-Trifluorotoluene-PID	ND	% Recovery	1	NA		02/13/01
0102137-01B		DRO							**X0148-014**
X0148	XG.2001.194-2	NA	O-terphenyl	87	% Recovery	1	NA		02/14/01
0102137-01C		8260							**X0155-024**
X0155	XG.2001.202-18	NA	1,2 Dichloroethane-D4 (SS)	109	% Recovery	1	NA		02/15/01
X0155	XG.2001.202-18	NA	4-Bromofluorobenzene (SS)	105	% Recovery	1	NA		02/15/01
X0155	XG.2001.202-18	NA	Dibromofluoromethane (SS)	102	% Recovery	1	NA		02/15/01
X0155	XG.2001.202-18	NA	Toluene-D8 (SS)	103	% Recovery	1	NA		02/15/01
0102137-01D		8270							**X0130-013**
X0130	XG.2001.209-6	NA	*2,4,6-TRIBROMOPHENOL	93	% Recovery	1	NA		02/15/01
X0130	XG.2001.209-6	NA	*2-FLUOROBIPHENYL	87	% Recovery	1	NA		02/15/01
[illegible]	XG.2001.209-6	NA	*2-FLUOROPHENOL	70	% Recovery	1	NA		02/15/01
[illegible]	XG.2001.209-6	NA	*NITROBENZENE-D5	80	% Recovery	1	NA		02/15/01
X0130	XG.2001.209-6	NA	*PHENOL-D6	81	% Recovery	1	NA		02/15/01
X0130	XG.2001.209-6	NA	*TERPHENYL-D14	84	% Recovery	1	NA		02/15/01

Client Sample ID **ST-106 SB28A 200'** Sample Matrix **SOIL**

QC Group	Run Sequence	CAS #	Analyte	Result	Units	Dilution Factor	Detection Limit	Code	Run Date
0102137-02A		GRO							**X0150-012**
X0150	XG.2001.192-3	NA	4-Bromofluorobenzene-FID	91	% Recovery	1	NA		02/13/01
X0150	XG.2001.192-3	NA	4-Bromofluorobenzene-PID	ND	% Recovery	1	NA		02/13/01
X0150	XG.2001.192-3	NA	aaa-Trifluorotoluene-FID	105	% Recovery	1	NA		02/13/01
X0150	XG.2001.192-3	NA	aaa-Trifluorotoluene-PID	ND	% Recovery	1	NA		02/13/01
0102137-02B		DRO							**X0148-015**
X0148	XG.2001.194-3	NA	O-terphenyl	89	% Recovery	1	NA		02/14/01

Client Sample ID **ST-106 SB28A 220'** Sample Matrix **SOIL**

QC Group	Run Sequence	CAS #	Analyte	Result	Units	Dilution Factor	Detection Limit	Code	Run Date
0[illegible]137-03A		GRO							X0150-013
[illegible]	XG.2001.192-4	NA	4-Bromofluorobenzene-FID	99	% Recovery	1	NA		02/13/01

Surrogate Summary: Fraction

Client: **CH2MHILL**

Project: **0102137** **160660.02.FF.SA**

X0150	XG.2001.192-4	NA	4-Bromofluorobenzene-PID	ND	% Recovery	1	NA		02/13/01
X0150	XG.2001.192-4	NA	aaa-Trifluorotoluene-FID	117	% Recovery	1	NA		02/13/01
X0150	XG.2001.192-4	NA	aaa-Trifluorotoluene-PID	ND	% Recovery	1	NA		02/13/01
0102137-03B		**DRO**							**X0148-0'6**
X0148	XG.2001.194-4	NA	O-terphenyl	93	% Recovery	1	NA		02/14/01

ASSAIGAI ANALYTICAL LABORATORIES, INC.

Chain of Custody Record

Lab job no. 0102137 Date 2-13-01

Page 1 of 1

7300 JEFFERSON, N.E.
ALBUQUERQUE, NEW MEXICO 87
(505) 345-8964

3332 WEDGEWOOD
EL PASO, TEXAS 79925
(915) 593-6000

127 EASTGATE DRIVE, 212-C
LOS ALAMOS, NEW MEXICO 87544
(505) 662-2558

Client: CH2M HILL INC

Project Manager / Contact: HALLORAN / LEFOVRE

Address: 6501 WOODSCHECK RD NE #350

Telephone No.: 294-5600

City / State / Zip: ALB NM 87110

Fax No.: 293-7507

Project Name / Number: [illegible] / TD-10 / [illegible]

Samplers: (Signature) [illegible]

Contract / Purchase Order / Quote

AAL Fraction Number	Field Sample Number / Location	Date	Time	Sample Type	Type / Size of Container	Preservation Temp.	Preservation Chemical	No. of Containers	LCD (Fe/Mn)	DZO (Fe/Mn)	VOC (8260)	SVOC (8270)						Remarks
[illegible]	430	2-12	1445	Soil	4oz	ice	—	4	X	X	X	X						7-day TAT
[illegible]	STHW SB2BA 200'	2-13	1208	Soil	4oz	ice	—	2	X	X								24 hr TAT
[illegible]	[illegible] SB2BA 210	2-13	1528	Soil	4oz	ice	—	2	X	X								24 hr TAT
																		7-day VOC/SVOC [illegible]

Relinquished by:	Date	Received by:	Relinquished by:	Date	Received by:
Signature [illegible]	2-13-01	Signature [illegible]	Signature		Signature
Printed [illegible]	Time	Printed [illegible]	Printed	Time	Printed
Company CH2M HILL	16:35	Company AAL	Company		Company
Reason [illegible]		Reason [illegible]	Reason		Reason

Method of Shipment:

Shipment No.

Special Instructions:

Comments:

After analysis, samples are to be:

- ☐ Disposed of (additional fee)
- ☐ Stored (30 days max)
- ☐ Stored over 30 days (additional fee)
- ☐ Returned to customer

COURIER

ASSAIGAI ANALYTICAL LABORATORIES, INC.
7300 Jefferson, NE • Albuquerque, New Mexico 87109 • (505) 345-8964 • FAX (505) 345-7259
3332 Wedgewood Dr., Suite N • El Paso, Texas 79925 • (915) 593-6000 • FAX (915) 593-7820
127 Eastgate Drive, 212-C • Los Alamos, New Mexico 87544 • (505) 662-2558

RECEIVED MAR 0 7 2001

Explanation of codes

B	analyte detected in Method Blank
E	result is estimated
H	analyzed out of hold time
N	tentatively identified compound
S	subcontracted
1-9	see footnote

CH2MHILL
attn: **AMY HALLORAN**
6001 INDIAN SCHOOL RD NE STE 350
ALBUQUERQUE, NM 87110-4140

Assaigai Analytical Laboratories, Inc.

Certificate of Analysis

Client: **CH2MHILL**
Project: **0102196** **160660.02.FF.SA**

William P. Biava: President of Assaigai Analytical Laboratories, Inc.

Client Sample ID ***ST106 SB 28A 250'*** Sample Matrix ***SOIL*** Sample Collected ***02/19/01 12:15:00***

QC Group	Run Sequence	CAS #	Analyte	Result	Units	Dilution Factor	Detection Limit	Code	Run Date
0102196-01A		**SW846 5030A/8015A GRO by GC/FID**							
X0150	XG.2001.214-5		Gasoline Range Organics	ND	mg / Kg	10	0.25		02/21/01
0102196-01B		**SW846 ME/8015A Diesel Range Organics by GC/FID**							
X0148	XG.2001.213-2		Diesel Range Organics	ND	mg / Kg	1	25		02/21/01

Client Sample ID ***ST106 SB 28A 270'*** Sample Matrix ***SOIL*** Sample Collected ***02/19/01 13:30:00***

QC Group	Run Sequence	CAS #	Analyte	Result	Units	Dilution Factor	Detection Limit	Code	Run Date
0102196-02A		**SW846 5030A/8015A GRO by GC/FID**							
X0150	XG.2001.214-6		Gasoline Range Organics	4400	mg / Kg	2000	0.25		02/21/01
0102196-02B		**SW846 ME/8015A Diesel Range Organics by GC/FID**							
X0148	XG.2001.213-6		Diesel Range Organics	1700	mg / Kg	10	25		02/21/01
0102196-02C		**SW846 8260A Purgeable VOCs by GC/MS**							
X0163	XG.2001.240-14	75-34-3	1,1 Dichloroethane	ND	mg / Kg	10	0.005		02/22/01
X0163	XG.2001.240-14	75-34-3	1,1 Dichloroethene	ND	mg / Kg	10	0.005		02/22/01
X0163	XG.2001.240-14	71-55-6	1,1,1 Trichloroethane	ND	mg / Kg	10	0.005		02/22/01
[illegible]	XG.2001.240-14	630-20-6	1,1,1,2 Tetrachloroethane	ND	mg / Kg	10	0.005		02/22/01
	XG.2001.240-14	79-00-5	1,1,2 Trichloroethane	ND	mg / Kg	10	0.005		02/22/01

Member
American Council of
Independent Laboratories, Inc

REPRODUCTION OF THIS REPORT IN LESS THAN FULL REQUIRES THE WRITTEN CONSENT OF AAL.
THIS REPORT MAY NOT BE USED IN ANY MANNER BY THE CLIENT OR ANY OTHER THIRD PARTY TO CLAIM
PRODUCT ENDORSEMENT BY ANY ACCREDITATION PROGRAM

Certificate of Analysis

Client: **CH2MHILL**

Project: **0102196** **160660.02.FF.SA**

X0163	XG.2001.240-14	79-34-5	1,1,2,2 Tetrachloroethane	ND	mg / Kg	10	0.005	02/22/01
X0163	XG.2001.240-14	106-93-4	1,2 Dibromoethane (EDB)	0.12	mg / Kg	10	0.005	02/22/01
X0163	XG.2001.240-14	95-50-1	1,2 Dichlorobenzene	ND	mg / Kg	10	0.005	02/22/01
X0163	XG.2001.240-14	107-06-2	1,2 Dichloroethane	ND	mg / Kg	10	0.005	02/22/01
X0163	XG.2001.240-14	78-87-5	1,2 Dichloropropane	ND	mg / Kg	10	0.005	02/22/01
X0163	XG.2001.240-14	96-18-4	1,2,3 Trichloropropane	ND	mg / Kg	10	0.005	02/22/01
X0163	XG.2001.240-14	95-63-6	1,2,4-Trimethylbenzene	0.27	mg / Kg	10	0.005	02/22/01
X0163	XG.2001.240-14	541-73-1	1,3 Dichlorobenzene	ND	mg / Kg	10	0.005	02/22/01
X0163	XG.2001.240-14	108-67-8	1,3,5-Trimethylbenzene	0.098	mg / Kg	10	0.005	02/22/01
X0163	XG.2001.240-14	764-41-0	1,4 Dichloro-2-butene	ND	mg / Kg	10	0.05	02/22/01
X0163	XG.2001.240-14	106-46-7	1,4 Dichlorobenzene	ND	mg / Kg	10	0.005	02/22/0
X0163	XG.2001.240-14	78-93-3	2-Butanone (MEK)	0.85	mg / Kg	10	0.025	02/22/0
X0163	XG.2001.240-14	110-75-8	2-Chloroethylvinylether	ND	mg / Kg	10	0.025	02/22/0
X0163	XG.2001.240-14	591-78-6	2-Hexanone (MBK)	ND	mg / Kg	10	0.025	02/22/0
X0163	XG.2001.240-14	108-10-1	4-Methyl-2-pentanone (MIBK)	ND	mg / Kg	10	0.025	02/22/0
X0163	XG.2001.240-14	67-64-1	Acetone	4.2	mg / Kg	10	0.05	02/22/0
X0163	XG.2001.240-14	107-02-8	Acrolein	ND	mg / Kg	10	0.1	02/22/0
X0163	XG.2001.240-14	107-13-1	Acrylonitrile	ND	mg / Kg	10	0.1	02/22/0
X0163	XG.2001.240-14	71-43-2	Benzene	0.64	mg / Kg	10	0.005	02/22/0
X0163	XG.2001.240-14	75-27-4	Bromodichloromethane	ND	mg / Kg	10	0.005	02/22/0
X0163	XG.2001.240-14	75-25-2	Bromoform	ND	mg / Kg	10	0.005	02/22/0
X0163	XG.2001.240-14	74-83-9	Bromomethane	ND	mg / Kg	10	0.025	02/22/0
X0163	XG.2001.240-14	75-15-0	Carbon disulfide	ND	mg / Kg	10	0.025	02/22
X0163	XG.2001.240-14	56-23-5	Carbon tetrachloride	ND	mg / Kg	10	0.005	02/22
X0163	XG.2001.240-14	108-90-7	Chlorobenzene	ND	mg / Kg	10	0.005	02/22/0
X0163	XG.2001.240-14	124-48-1	Chlorodibromomethane	ND	mg / Kg	10	0.005	02/22/0
X0163	XG.2001.240-14	75-00-3	Chloroethane	ND	mg / Kg	10	0.025	02/22/0
X0163	XG.2001.240-14	67-66-3	Chloroform	ND	mg / Kg	10	0.005	02/22/0
X0163	XG.2001.240-14	74-87-3	Chloromethane	ND	mg / Kg	10	0.025	02/22/0
X0163	XG.2001.240-14	156-59-2	cis-1,2 dichloroethene	ND	mg / Kg	10	0.005	02/22/0
X0163	XG.2001.240-14	10061-01-5	cis-1,3 dichloropropene	ND	mg / Kg	10	0.005	02/22/0
X0163	XG.2001.240-14	74-95-3	Dibromomethane	ND	mg / Kg	10	0.005	02/22/01
X0163	XG.2001.240-14	97-63-2	Ethyl methacrylate	ND	mg / Kg	10	0.025	02/22/01
X0163	XG.2001.240-14	100-41-4	Ethylbenzene	0.48	mg / Kg	10	0.005	02/22/01
X0163	XG.2001.240-14		Freon 113	ND	mg / Kg	10	0.025	02/22/01
X0163	XG.2001.240-14	75-71-8	Freon 12	ND	mg / Kg	10	0.05	02/22/01
X0163	XG.2001.240-14	74-88-4	Iodomethane	ND	mg / Kg	10	0.025	02/22/01
X0163	XG.2001.240-14	1634-04-4	Methyl t-butyl ether (MTBE)	ND	mg / Kg	10	0.005	02/22/01
X0163	XG.2001.240-14	75-09-2	Methylene chloride	ND	mg / Kg	10	0.05	02/22/01
X0163	XG.2001.240-14	91-20-3	Naphthalene	ND	mg / Kg	10	0.025	02/22/01
X0163	XG.2001.240-14	95-47-6	o-Xylene	0.28	mg / Kg	10	0.005	02/22/01
X0163	XG.2001.240-14	108-38-3/106-42	p/m Xylenes	0.74	mg / Kg	10	0.01	02/22/01
X0163	XG.2001.240-14	100-42-5	Styrene	ND	mg / Kg	10	0.005	02/22/01
X0163	XG.2001.240-14	156-60-5	t-1,2 Dichloroethene	ND	mg / Kg	10	0.005	02/22/01
X0163	XG.2001.240-14	10061-02-6	t-1,3 Dichloropropene	ND	mg / Kg	10	0.005	02/22/01
X0163	XG.2001.240-14	127-18-4	Tetrachloroethene	ND	mg / Kg	10	0.005	02/22/01
X0163	XG.2001.240-14	108-88-3	Toluene	2.2	mg / Kg	10	0.005	02/22/01
X0163	XG.2001.240-14	79-01-6	Trichloroethene	ND	mg / Kg	10	0.005	02/22

Certificate of Analysis

t: **CH2MHILL**

Project: **0102196** **160660.02.FF.SA**

X0163	XG.2001.240-14	75-69-4	Trichlorofluoromethane	ND	mg / Kg	10	0.025		02/22/01
X0163	XG.2001.240-14	108-05-4	Vinyl acetate	ND	mg / Kg	10	0.025		02/22/01
X0163	XG.2001.240-14	75-01-4	Vinyl chloride	ND	mg / Kg	10	0.025		02/22/01

0102196-02D **SW846 3550A/8270B SVOCs by GC/MS**

X0167	XG.2001.223-7	120-82-1	1,2,4-Trichlorobenzene	ND	mg / Kg	1	0.03		02/22/01
X0167	XG.2001.223-7	95-50-1	1,2-Dichlorobenzene	ND	mg / Kg	1	0.03		02/22/01
X0167	XG.2001.223-7	541-73-1	1,3-Dichlorobenzene	ND	mg / Kg	1	0.03		02/22/01
X0167	XG.2001.223-7	106-46-7	1,4-Dichlorobenzene	ND	mg / Kg	1	0.03		02/22/01
X0167	XG.2001.223-7	90-12-0	1-Methylnaphthalene	0.16	mg / Kg	1	0.03		02/22/01
X0167	XG.2001.223-7	58-90-2	2,3,4,6-Tetrachlorophenol	ND	mg / Kg	1	1.5		02/22/01
X0167	XG.2001.223-7	95-95-4	2,4,5-Trichlorophenol	ND	mg / Kg	1	0.3		02/22/01
X0167	XG.2001.223-7	88-06-2	2,4,6-Trichlorophenol	ND	mg / Kg	1	0.3		02/22/01
X0167	XG.2001.223-7	120-83-2	2,4-Dichlorophenol	ND	mg / Kg	1	0.3		02/22/01
X0167	XG.2001.223-7	105-67-9	2,4-Dimethylphenol	ND	mg / Kg	1	0.03		02/22/01
X0167	XG.2001.223-7	51-28-5	2,4-Dinitrophenol	ND	mg / Kg	1	0.67		02/22/01
X0167	XG.2001.223-7	121-14-2	2,4-Dinitrotoluene	ND	mg / Kg	1	0.3		02/22/01
X0167	XG.2001.223-7	606-20-2	2,6-Dinitrotoluene	ND	mg / Kg	1	0.3		02/22/01
X0167	XG.2001.223-7	91-58-7	2-Chloronaphthalene	ND	mg / Kg	1	0.03		02/22/01
X0167	XG.2001.223-7	95-57-8	2-Chlorophenol	ND	mg / Kg	1	0.03		02/22/01
X0167	XG.2001.223-7	91-57-6	2-Methylnaphthalene	0.18	mg / Kg	1	0.03		02/22/01
X0167	XG.2001.223-7	95-48-7	2-Methylphenol	ND	mg / Kg	1	0.03		02/22/01
	XG.2001.223-7	88-74-4	2-Nitroaniline	ND	mg / Kg	1	0.3		02/22/01
7	XG.2001.223-7	88-75-5	2-Nitrophenol	ND	mg / Kg	1	0.3		02/22/01
X0167	XG.2001.223-7		3+4 Methylphenol	ND	mg / Kg	1	0.03		02/22/01
X0167	XG.2001.223-7	91-94-1	3,3-Dichlorobenzidine	ND	mg / Kg	1	0.3		02/22/01
X0167	XG.2001.223-7	99-09-2	3-Nitroaniline	ND	mg / Kg	1	0.3		02/22/01
X0167	XG.2001.223-7	534-52-1	4,6-Dinitro-2-methylphenol	ND	mg / Kg	1	0.3		02/22/01
X0167	XG.2001.223-7	101-55-3	4-Bromophenyl-phenylether	ND	mg / Kg	1	0.03		02/22/01
X0167	XG.2001.223-7	59-50-7	4-Chloro-3-methylphenol	ND	mg / Kg	1	0.3		02/22/01
X0167	XG.2001.223-7	106-47-8	4-Chloroaniline	ND	mg / Kg	1	0.3		02/22/01
X0167	XG.2001.223-7	7005-72-3	4-Chlorophenyl-phenylether	ND	mg / Kg	1	0.03		02/22/01
X0167	XG.2001.223-7	100-01-6	4-Nitroaniline	ND	mg / Kg	1	0.3		02/22/01
X0167	XG.2001.223-7	100-02-7	4-Nitrophenol	ND	mg / Kg	1	0.6		02/22/01
X0167	XG.2001.223-7	83-32-9	Acenaphthene	ND	mg / Kg	1	0.03		02/22/01
X0167	XG.2001.223-7	208-96-8	Acenaphthylene	ND	mg / Kg	1	0.03		02/22/01
X0167	XG.2001.223-7	62-53-3	Aniline	ND	mg / Kg	1	0.3		02/22/01
X0167	XG.2001.223-7	120-12-7	Anthracene	ND	mg / Kg	1	0.03		02/22/01
X0167	XG.2001.223-7		Azobenzene&1,2-Diphenylhydrazine	ND	mg / Kg	1	0.03		02/22/01
X0167	XG.2001.223-7	56-55-3	Benzo (a) anthracene	ND	mg / Kg	1	0.03		02/22/01
X0167	XG.2001.223-7	50-32-8	Benzo(a)pyrene	ND	mg / Kg	1	0.03		02/22/01
X0167	XG.2001.223-7		Benzo(b & k)fluoranthene	ND	mg / Kg	1	0.03		02/22/01
X0167	XG.2001.223-7	191-24-2	Benzo(g,h,i)perylene	ND	mg / Kg	1	0.3		02/22/01
X0167	XG.2001.223-7	64-85-0	Benzoic acid	ND	mg / Kg	1	3		02/22/01
X0167	XG.2001.223-7	100-51-6	Benzyl alcohol	ND	mg / Kg	1	1.5		02/22/01
X0167	XG.2001.223-7	111-44-4	bis (2-Chloroethyl) ether	ND	mg / Kg	1	0.03		02/22/01
X0167	XG.2001.223-7	111-91-1	bis(2-Chloroethoxy)methane	ND	mg / Kg	1	0.03		02/22/01
7	XG.2001.223-7	108-60-1	bis(2-Chloroisopropyl)ether	ND	mg / Kg	1	0.03		02/22/01

Certificate of Analysis

Client: **CH2MHILL**

Project: **0102196** **160660.02.FF.SA**

X0167	XG.2001.223-7	117-81-7	bis(2-Ethylhexyl)phthalate	ND	mg / Kg	1	0.3		02/22/01
X0167	XG.2001.223-7	85-68-7	Butylbenzylphthalate	ND	mg / Kg	1	0.03		02/22/01
X0167	XG.2001.223-7	218-01-9	Chrysene	ND	mg / Kg	1	0.03		02/22/01
X0167	XG.2001.223-7	84-74-2	di-n-Butylphthalate	ND	mg / Kg	1	0.3		02/22/01
X0167	XG.2001.223-7	117-84-0	di-n-Octylpthalate	ND	mg / Kg	1	0.3		02/22/01
X0167	XG.2001.223-7	53-70-3	Dibenz(a,h)anthracene	ND	mg / Kg	1	0.3		02/22/01
X0167	XG.2001.223-7	132-64-9	Dibenzofuran	ND	mg / Kg	1	0.03		02/22/01
X0167	XG.2001.223-7	84-66-2	Diethylphthalate	ND	mg / Kg	1	0.03		02/22/01
X0167	XG.2001.223-7	131-11-3	Dimethylphthalate	ND	mg / Kg	1	0.03		02/22/01
X0167	XG.2001.223-7	206-44-0	Fluoranthene	ND	mg / Kg	1	0.03		02/22/01
X0167	XG.2001.223-7	86737	Fluorene	ND	mg / Kg	1	0.03		02/22/01
X0167	XG.2001.223-7	118-74-1	Hexachlorobenzene	ND	mg / Kg	1	0.03		02/22/01
X0167	XG.2001.223-7	87-68-3	Hexachlorobutadiene	ND	mg / Kg	1	0.03		02/22/01
X0167	XG.2001.223-7	77-47-4	Hexachlorocyclopentadiene	ND	mg / Kg	1	1.5		02/22/01
X0167	XG.2001.223-7	67-72-1	Hexachloroethane	ND	mg / Kg	1	0.03		02/22/01
X0167	XG.2001.223-7	193-39-5	Indeno(1,2,3-cd)pyrene	ND	mg / Kg	1	0.3		02/22/01
X0167	XG.2001.223-7	78-59-1	Isophorone	ND	mg / Kg	1	0.03		02/22/01
X0167	XG.2001.223-7	621-64-7	n-Nitroso-di-n-propylamine	ND	mg / Kg	1	0.03		02/22/01
X0167	XG.2001.223-7	62-75-9	n-Nitroso-dimethyl-amine	ND	mg / Kg	1	0.3		02/22/01
X0167	XG.2001.223-7	86-30-6	n-Nitrosodiphenylamine	ND	mg / Kg	1	0.03		02/22/01
X0167	XG.2001.223-7	91-20-3	Naphthalene	0.044	mg / Kg	1	0.03		02/22/01
X0167	XG.2001.223-7	98-95-3	Nitrobenzene	ND	mg / Kg	1	0.03		02/22/01
X0167	XG.2001.223-7	87-86-5	Pentachlorophenol	ND	mg / Kg	1	0.3		02/22
X0167	XG.2001.223-7	85-01-8	Phenanthrene	ND	mg / Kg	1	0.03		02/22
X0167	XG.2001.223-7	108-95-2	Phenol	ND	mg / Kg	1	0.3		02/22/01
X0167	XG.2001.223-7	129-00-0	Pyrene	ND	mg / Kg	1	0.03		02/22/01
X0167	XG.2001.223-7	110-86-1	Pyridine	ND	mg / Kg	1	0.3		02/22/01

Client Sample ID ***ST106 SB 28A 320'*** Sample Matrix ***SOIL*** Sample Collected ***02/20/01 09:05:00***

QC Group	Run Sequence	CAS #	Analyte	Result	Units	Dilution Factor	Detection Limit	Code	Run Date
0102196-03A		**SW846 5030A/8015A GRO by GC/FID**							
X0150	XG.2001.214-3		Gasoline Range Organics	ND	mg / Kg	1	0.25		02/21/01
0102196-03B		**SW846 ME/8015A Diesel Range Organics by GC/FID**							
X0148	XG.2001.213-3		Diesel Range Organics	59	mg / Kg	1	25		02/21/01
0102196-03C		**SW846 8260A Purgeable VOCs by GC/MS**							
X0163	XG.2001.240-4	75-34-3	1,1 Dichloroethane	ND	mg / Kg	1	0.005		02/21/01
X0163	XG.2001.240-4	75-34-3	1,1 Dichloroethene	ND	mg / Kg	1	0.005		02/21/01
X0163	XG.2001.240-4	71-55-6	1,1,1 Trichloroethane	ND	mg / Kg	1	0.005		02/21/01
X0163	XG.2001.240-4	630-20-6	1,1,1,2 Tetrachloroethane	ND	mg / Kg	1	0.005		02/21/01
X0163	XG.2001.240-4	79-00-5	1,1,2 Trichloroethane	ND	mg / Kg	1	0.005		02/21/01
X0163	XG.2001.240-4	79-34-5	1,1,2,2 Tetrachloroethane	ND	mg / Kg	1	0.005		02/21/01
X0163	XG.2001.240-4	106-93-4	1,2 Dibromoethane (EDB)	ND	mg / Kg	1	0.005		02/21/01
X0163	XG.2001.240-4	95-50-1	1,2 Dichlorobenzene	ND	mg / Kg	1	0.005		02/2

Certificate of Analysis

.t: **CH2MHILL**

Project: **0102196** **160660.02.FF.SA**

X0163	XG.2001.240-4	107-06-2	1,2 Dichloroethane	ND	mg / Kg	1	0.005		02/21/01
X0163	XG.2001.240-4	78-87-5	1,2 Dichloropropane	ND	mg / Kg	1	0.005		02/21/01
X0163	XG.2001.240-4	96-18-4	1,2,3 Trichloropropane	ND	mg / Kg	1	0.005		02/21/01
X0163	XG.2001.240-7	95-63-6	1,2,4-Trimethylbenzene	ND	mg / Kg	1	0.005		02/21/01
X0163	XG.2001.240-4	541-73-1	1,3 Dichlorobenzene	ND	mg / Kg	1	0.005		02/21/01
X0163	XG.2001.240-4	108-67-8	1,3,5-Trimethylbenzene	ND	mg / Kg	1	0.005		02/21/01
X0163	XG.2001.240-4	764-41-0	1,4 Dichloro-2-butene	ND	mg / Kg	1	0.05		02/21/01
X0163	XG.2001.240-4	106-46-7	1,4 Dichlorobenzene	ND	mg / Kg	1	0.005		02/21/01
X0163	XG.2001.240-4	78-93-3	2-Butanone (MEK)	ND	mg / Kg	1	0.025		02/21/01
X0163	XG.2001.240-4	110-75-8	2-Chloroethylvinylether	ND	mg / Kg	1	0.025		02/21/01
X0163	XG.2001.240-4	591-78-6	2-Hexanone (MBK)	ND	mg / Kg	1	0.025		02/21/01
X0163	XG.2001.240-4	108-10-1	4-Methyl-2-pentanone (MIBK)	ND	mg / Kg	1	0.025		02/21/01
X0163	XG.2001.240-4	67-64-1	Acetone	ND	mg / Kg	1	0.05		02/21/01
X0163	XG.2001.240-4	107-02-8	Acrolein	ND	mg / Kg	1	0.1		02/21/01
X0163	XG.2001.240-4	107-13-1	Acrylonitrile	ND	mg / Kg	1	0.1		02/21/01
X0163	XG.2001.240-4	71-43-2	Benzene	ND	mg / Kg	1	0.005		02/21/01
X0163	XG.2001.240-4	75-27-4	Bromodichloromethane	ND	mg / Kg	1	0.005		02/21/01
X0163	XG.2001.240-4	75-25-2	Bromoform	ND	mg / Kg	1	0.005		02/21/01
X0163	XG.2001.240-4	74-83-9	Bromomethane	ND	mg / Kg	1	0.025		02/21/01
X0163	XG.2001.240-4	75-15-0	Carbon disulfide	ND	mg / Kg	1	0.025		02/21/01
X0163	XG.2001.240-4	56-23-5	Carbon tetrachloride	ND	mg / Kg	1	0.005		02/21/01
X0163	XG.2001.240-4	108-90-7	Chlorobenzene	ND	mg / Kg	1	0.005		02/21/01
	XG.2001.240-4	124-48-1	Chlorodibromomethane	ND	mg / Kg	1	0.005		02/21/01
X0163	XG.2001.240-4	75-00-3	Chloroethane	ND	mg / Kg	1	0.025		02/21/01
X0163	XG.2001.240-4	67-66-3	Chloroform	ND	mg / Kg	1	0.005		02/21/01
X0163	XG.2001.240-4	74-87-3	Chloromethane	ND	mg / Kg	1	0.025		02/21/01
X0163	XG.2001.240-4	156-59-2	cis-1,2 dichloroethene	ND	mg / Kg	1	0.005		02/21/01
X0163	XG.2001.240-4	10061-01-5	cis-1,3 dichloropropene	ND	mg / Kg	1	0.005		02/21/01
X0163	XG.2001.240-4	74-95-3	Dibromomethane	ND	mg / Kg	1	0.005		02/21/01
X0163	XG.2001.240-4	97-63-2	Ethyl methacrylate	ND	mg / Kg	1	0.025		02/21/01
X0163	XG.2001.240-4	100-41-4	Ethylbenzene	ND	mg / Kg	1	0.005		02/21/01
X0163	XG.2001.240-4		Freon 113	ND	mg / Kg	1	0.025		02/21/01
X0163	XG.2001.240-4	75-71-8	Freon 12	ND	mg / Kg	1	0.05		02/21/01
X0163	XG.2001.240-4	74-88-4	Iodomethane	ND	mg / Kg	1	0.025		02/21/01
X0163	XG.2001.240-4	1634-04-4	Methyl t-butyl ether (MTBE)	ND	mg / Kg	1	0.005		02/21/01
X0163	XG.2001.240-4	75-09-2	Methylene chloride	ND	mg / Kg	1	0.05		02/21/01
X0163	XG.2001.240-4	91-20-3	Naphthalene	ND	mg / Kg	1	0.025		02/21/01
X0163	XG.2001.240-4	95-47-6	o-Xylene	ND	mg / Kg	1	0.005		02/21/01
X0163	XG.2001.240-4	108-38-3/106-42	p/m Xylenes	ND	mg / Kg	1	0.01		02/21/01
X0163	XG.2001.240-4	100-42-5	Styrene	ND	mg / Kg	1	0.005		02/21/01
X0163	XG.2001.240-4	156-60-5	t-1,2 Dichloroethene	ND	mg / Kg	1	0.005		02/21/01
X0163	XG.2001.240-4	10061-02-6	t-1,3 Dichloropropene	ND	mg / Kg	1	0.005		02/21/01
X0163	XG.2001.240-4	127-18-4	Tetrachloroethene	ND	mg / Kg	1	0.005		02/21/01
X0163	XG.2001.240-4	108-88-3	Toluene	ND	mg / Kg	1	0.005		02/21/01
X0163	XG.2001.240-4	79-01-6	Trichloroethene	ND	mg / Kg	1	0.005		02/21/01
X0163	XG.2001.240-4	75-69-4	Trichlorofluoromethane	ND	mg / Kg	1	0.025		02/21/01
X0163	XG.2001.240-4	108-05-4	Vinyl acetate	ND	mg / Kg	1	0.025		02/21/01
	XG.2001.240-4	75-01-4	Vinyl chloride	ND	mg / Kg	1	0.025		02/21/01

Certificate of Analysis

Client: **CH2MHILL**

Project: **0102196** **160660.02.FF.SA**

0102196-03D **SW846 3550A/8270B SVOCs by GC/MS**

X0167	XG.2001.223-4	120-82-1	1,2,4-Trichlorobenzene	ND	mg / Kg	1	0.03	12	02/22/01
X0167	XG.2001.223-4	95-50-1	1,2-Dichlorobenzene	ND	mg / Kg	1	0.03	12	02/22/01
X0167	XG.2001.223-4	541-73-1	1,3-Dichlorobenzene	ND	mg / Kg	1	0.03	12	02/22/01
X0167	XG.2001.223-4	106-46-7	1,4-Dichlorobenzene	ND	mg / Kg	1	0.03	12	02/22/01
X0167	XG.2001.223-4	90-12-0	1-Methylnaphthalene	ND	mg / Kg	1	0.03	12	02/22/01
X0167	XG.2001.223-4	58-90-2	2,3,4,6-Tetrachlorophenol	ND	mg / Kg	1	1.5	12	02/22/01
X0167	XG.2001.223-4	95-95-4	2,4,5-Trichlorophenol	ND	mg / Kg	1	0.3	12	02/22/01
X0167	XG.2001.223-4	88-06-2	2,4,6-Trichlorophenol	ND	mg / Kg	1	0.3	12	02/22/01
X0167	XG.2001.223-4	120-83-2	2,4-Dichlorophenol	ND	mg / Kg	1	0.3	12	02/22/01
X0167	XG.2001.223-4	105-67-9	2,4-Dimethylphenol	ND	mg / Kg	1	0.03	12	02/22/01
X0167	XG.2001.223-4	51-28-5	2,4-Dinitrophenol	ND	mg / Kg	1	0.67	12	02/22/01
X0167	XG.2001.223-4	121-14-2	2,4-Dinitrotoluene	ND	mg / Kg	1	0.3	12	02/22/01
X0167	XG.2001.223-4	606-20-2	2,6-Dinitrotoluene	ND	mg / Kg	1	0.3	12	02/22/01
X0167	XG.2001.223-4	91-58-7	2-Chloronaphthalene	ND	mg / Kg	1	0.03	12	02/22/01
X0167	XG.2001.223-4	95-57-8	2-Chlorophenol	ND	mg / Kg	1	0.03	12	02/22/01
X0167	XG.2001.223-4	91-57-6	2-Methylnaphthalene	ND	mg / Kg	1	0.03	12	02/22/01
X0167	XG.2001.223-4	95-48-7	2-Methylphenol	ND	mg / Kg	1	0.03	12	02/22/01
X0167	XG.2001.223-4	88-74-4	2-Nitroaniline	ND	mg / Kg	1	0.3	12	02/22/01
X0167	XG.2001.223-4	88-75-5	2-Nitrophenol	ND	mg / Kg	1	0.3	12	02/22/01
X0167	XG.2001.223-4		3+4 Methylphenol	ND	mg / Kg	1	0.03	12	02/22/01
X0167	XG.2001.223-4	91-94-1	3,3-Dichlorobenzidine	ND	mg / Kg	1	0.3	12	02/22/0
X0167	XG.2001.223-4	99-09-2	3-Nitroaniline	ND	mg / Kg	1	0.3	12	02/2
X0167	XG.2001.223-4	534-52-1	4,6-Dinitro-2-methylphenol	ND	mg / Kg	1	0.3	12	02/22/0
X0167	XG.2001.223-4	101-55-3	4-Bromophenyl-phenylether	ND	mg / Kg	1	0.03	12	02/22/0
X0167	XG.2001.223-4	59-50-7	4-Chloro-3-methylphenol	ND	mg / Kg	1	0.3	12	02/22/0
X0167	XG.2001.223-4	106-47-8	4-Chloroaniline	ND	mg / Kg	1	0.3	12	02/22/0
X0167	XG.2001.223-4	7005-72-3	4-Chlorophenyl-phenylether	ND	mg / Kg	1	0.03	12	02/22/0
X0167	XG.2001.223-4	100-01-6	4-Nitroaniline	ND	mg / Kg	1	0.3	12	02/22/0
X0167	XG.2001.223-4	100-02-7	4-Nitrophenol	ND	mg / Kg	1	0.6	12	02/22/0
X0167	XG.2001.223-4	83-32-9	Acenaphthene	ND	mg / Kg	1	0.03	12	02/22/0
X0167	XG.2001.223-4	208-96-8	Acenaphthylene	ND	mg / Kg	1	0.03	12	02/22/0
X0167	XG.2001.223-4	62-53-3	Aniline	ND	mg / Kg	1	0.3	12	02/22/0
X0167	XG.2001.223-4	120-12-7	Anthracene	ND	mg / Kg	1	0.03	12	02/22/0
X0167	XG.2001.223-4		Azobenzene&1,2-Diphenylhydrazine	ND	mg / Kg	1	0.03	12	02/22/0
X0167	XG.2001.223-4	56-55-3	Benzo (a) anthracene	ND	mg / Kg	1	0.03	12	02/22/0
X0167	XG.2001.223-4	50-32-8	Benzo(a)pyrene	ND	mg / Kg	1	0.03	12	02/22/0
X0167	XG.2001.223-4		Benzo(b & k)fluoranthene	ND	mg / Kg	1	0.03	12	02/22/0
X0167	XG.2001.223-4	191-24-2	Benzo(g,h,i)perylene	ND	mg / Kg	1	0.3	12	02/22/0
X0167	XG.2001.223-4	64-85-0	Benzoic acid	ND	mg / Kg	1	3	12	02/22/0
X0167	XG.2001.223-4	100-51-6	Benzyl alcohol	ND	mg / Kg	1	1.5	12	02/22/0
X0167	XG.2001.223-4	111-44-4	bis (2-Chloroethyl) ether	ND	mg / Kg	1	0.03	12	02/22/0
X0167	XG.2001.223-4	111-91-1	bis(2-Chloroethoxy)methane	ND	mg / Kg	1	0.03	12	02/22/0
X0167	XG.2001.223-4	108-60-1	bis(2-Chloroisopropyl)ether	ND	mg / Kg	1	0.03	12	02/22/0
X0167	XG.2001.223-4	117-81-7	bis(2-Ethylhexyl)phthalate	ND	mg / Kg	1	0.3	12	02/22/0
X0167	XG.2001.223-4	85-68-7	Butylbenzylphthalate	ND	mg / Kg	1	0.03	12	02/22/0
X0167	XG.2001.223-4	218-01-9	Chrysene	ND	mg / Kg	1	0.03	12	02/22/0

Certificate of Analysis

Client: CH2MHILL
Project: 0102196 160660.02.FF.SA

X0167	XG.2001.223-4	84-74-2	di-n-Butylphthalate	ND	mg / Kg	1	0.3	12	02/22/01
X0167	XG.2001.223-4	117-84-0	di-n-Octylpthalate	ND	mg / Kg	1	0.3	12	02/22/01
X0167	XG.2001.223-4	53-70-3	Dibenz(a,h)anthracene	ND	mg / Kg	1	0.3	12	02/22/01
X0167	XG.2001.223-4	132-64-9	Dibenzofuran	ND	mg / Kg	1	0.03	12	02/22/01
X0167	XG.2001.223-4	84-66-2	Diethylphthalate	ND	mg / Kg	1	0.03	12	02/22/01
X0167	XG.2001.223-4	131-11-3	Dimethylphthalate	ND	mg / Kg	1	0.03	12	02/22/01
X0167	XG.2001.223-4	206-44-0	Fluoranthene	ND	mg / Kg	1	0.03	12	02/22/01
X0167	XG.2001.223-4	86737	Fluorene	ND	mg / Kg	1	0.03	12	02/22/01
X0167	XG.2001.223-4	118-74-1	Hexachlorobenzene	ND	mg / Kg	1	0.03	12	02/22/01
X0167	XG.2001.223-4	87-68-3	Hexachlorobutadiene	ND	mg / Kg	1	0.03	12	02/22/01
X0167	XG.2001.223-4	77-47-4	Hexachlorocyclopentadiene	ND	mg / Kg	1	1.5	12	02/22/01
X0167	XG.2001.223-4	67-72-1	Hexachloroethane	ND	mg / Kg	1	0.03	12	02/22/01
X0167	XG.2001.223-4	193-39-5	Indeno(1,2,3-cd)pyrene	ND	mg / Kg	1	0.3	12	02/22/01
X0167	XG.2001.223-4	78-59-1	Isophorone	ND	mg / Kg	1	0.03	12	02/22/01
X0167	XG.2001.223-4	621-64-7	n-Nitroso-di-n-propylamine	ND	mg / Kg	1	0.03	12	02/22/01
X0167	XG.2001.223-4	62-75-9	n-Nitroso-dimethyl-amine	ND	mg / Kg	1	0.3	12	02/22/01
X0167	XG.2001.223-4	86-30-6	n-Nitrosodiphenylamine	ND	mg / Kg	1	0.03	12	02/22/01
X0167	XG.2001.223-4	91-20-3	Naphthalene	ND	mg / Kg	1	0.03	12	02/22/01
X0167	XG.2001.223-4	98-95-3	Nitrobenzene	ND	mg / Kg	1	0.03	12	02/22/01
X0167	XG.2001.223-4	87-86-5	Pentachlorophenol	ND	mg / Kg	1	0.3	12	02/22/01
X0167	XG.2001.223-4	85-01-8	Phenanthrene	ND	mg / Kg	1	0.03	12	02/22/01
X0167	XG.2001.223-4	108-95-2	Phenol	ND	mg / Kg	1	0.3	12	02/22/01
	XG.2001.223-4	129-00-0	Pyrene	ND	mg / Kg	1	0.03	12	02/22/01
[illegible]	XG.2001.223-4	110-86-1	Pyridine	ND	mg / Kg	1	0.3	12	02/22/01

Client Sample ID: **ST106 SB 28A 330'** Sample Matrix: **SOIL** Sample Collected: **02/20/01 10:30:00**

QC Group	Run Sequence	CAS #	Analyte	Result	Units	Dilution Factor	Detection Limit	Code	Run Date
0102196-04A		**SW846 5030A/8015A GRO by GC/FID**							
X0150	XG.2001.214-4		Gasoline Range Organics	ND	mg / Kg	1	0.25		02/21/01
0102196-04B		**SW846 ME/8015A Diesel Range Organics by GC/FID**							
X0148	XG.2001.213-4		Diesel Range Organics	ND	mg / Kg	1	25		02/21/01
0102196-04C		**SW846 5030A/8021B Purgeable VOCs by GC/PID**							
X0158	XG.2001.255-2	71-43-2	Benzene	ND	mg / Kg	1	0.005		03/01/01
X0158	XG.2001.255-2	100-41-4	Ethylbenzene	ND	mg / Kg	1	0.005		03/01/01
X0158	XG.2001.255-2	95-47-6	o-Xylene	ND	mg / Kg	1	0.005		03/01/01
X0158	XG.2001.255-2	108-38-3/106-42	p/m-Xylenes	ND	mg / Kg	1	0.01		03/01/01
X0158	XG.2001.255-2	108-88-3	Toluene	0.008	mg / Kg	1	0.005		03/01/01

Certificate of Analysis

Client: **CH2MHILL**

Project: **0102196** **160660.02.FF.SA**

**** Sample specific Detection Limit is determined by multiplying the sample Dilution Factor by the listed Reporting Detection Limit. ****

**** ND = Not detected: less than the sample specific Detection Limit. Results relate only to the items tested. ****

footnote

1 This sample was utilized for matrix spike and spike duplicate analysis. Please note that all of the MS/MSD RPDs were out of criteria, suggesting matrix interference problems during the extraction and/or analysis.

2 This sample was utilized for matrix spike and matrix spike analysis. One of the surrogate recoveries for the matrix spike was out of criteria, suggesting matrix interference problems.

Assaigai Analytical Laboratories, Inc.

Quality Control Summary

Explanation of codes	
D	*Not applicable due to sample dilution*
L	*Not applicable due to MDL proximity*

Client: **CH2MHILL**

Project: **0102196** **160660.02.FF.SA**

QC Type: **LCS: Lab Control Spike** QC Matrix: **SOLID**

QC Group	Run Sequence	CAS #	Analyte	Result	Units	Dilution Factor	Detection Limit	Code	Run Date
X0148-002		**SW846 ME/8015A Diesel Range Organics by GC/FID**							
X0148	XG.2001.169-2		Diesel Range Organics	90	% Recovery	1	NA		02/07/01
X0158-002		**SW846 5030A/8021B Purgeable VOCs by GC/PID**							
X0158	XG.2001.210-2	71-43-2	Benzene	97	% Recovery	1	NA		02/15/01
X0158	XG.2001.210-2	100-41-4	Ethylbenzene	97	% Recovery	1	NA		02/15/01
X0158	XG.2001.210-2	95-47-6	o-Xylene	96	% Recovery	1	NA		02/15/01
X0158	XG.2001.210-2	108-38-3/106-42	p/m-Xylenes	98	% Recovery	1	NA		02/15/01
X0158	XG.2001.210-2	108-88-3	Toluene	96	% Recovery	1	NA		02/15/01
X0163-002		**SW846 8260A Purgeable VOCs by GC/MS**							
X0163	XG.2001.240-2	75-34-3	1,1 Dichloroethene	112	% Recovery	1	NA		02/21/01
X0163	XG.2001.240-2	106-46-7	1,4 Dichlorobenzene	103	% Recovery	1	NA		02/21/01
X0163	XG.2001.240-2	71-43-2	Benzene	112	% Recovery	1	NA		02/21/01
X0163	XG.2001.240-2	108-90-7	Chlorobenzene	108	% Recovery	1	NA		02/21/01
X0163	XG.2001.240-2	108-88-3	Toluene	114	% Recovery	1	NA		02/21/01
X0163	XG.2001.240-2	79-01-6	Trichloroethene	106	% Recovery	1	NA		02/21/01
[illegible]7-002		**SW846 3550A/8270B SVOCs by GC/MS**							
X0167	XG.2001.223-2	120-82-1	1,2,4-Trichlorobenzene	65	% Recovery	1	NA		02/22/01
X0167	XG.2001.223-2	106-46-7	1,4-Dichlorobenzene	67	% Recovery	1	NA		02/22/01
X0167	XG.2001.223-2	121-14-2	2,4-Dinitrotoluene	75	% Recovery	1	NA		02/22/01
X0167	XG.2001.223-2	95-57-8	2-Chlorophenol	72	% Recovery	1	NA		02/22/01
X0167	XG.2001.223-2	59-50-7	4-Chloro-3-methylphenol	78	% Recovery	1	NA		02/22/01
X0167	XG.2001.223-2	100-02-7	4-Nitrophenol	92	% Recovery	1	NA		02/22/01
X0167	XG.2001.223-2	83-32-9	Acenaphthene	82	% Recovery	1	NA		02/22/01
X0167	XG.2001.223-2	117-84-0	di-n-Octylpthalate	90	% Recovery	1	NA		02/22/01
X0167	XG.2001.223-2	621-64-7	n-Nitroso-di-n-propylamine	80	% Recovery	1	NA		02/22/01
X0167	XG.2001.223-2	87-86-5	Pentachlorophenol	92	% Recovery	1	NA		02/22/01
X0167	XG.2001.223-2	108-95-2	Phenol	68	% Recovery	1	NA		02/22/01
X0167	XG.2001.223-2	129-00-0	Pyrene	83	% Recovery	1	NA		02/22/01

QC Type: **LCSD: Lab Control Spike Duplicate Accuracy** QC Matrix: **SOLID**

QC Group	Run Sequence	CAS #	Analyte	Result	Units	Dilution Factor	Detection Limit	Code	Run Date
X0148-003		**SW846 ME/8015A Diesel Range Organics by GC/FID**							
X0148	XG.2001.169-3		Diesel Range Organics	91	% Recovery	1	NA		02/07/01
X0150-003		**SW846 5030A/8015A GRO by GC/FID**							
X0150	XG.2001.174-3		Gasoline Range Organics	92	% Recovery	1	NA		02/07/01
[illegible]158-003		**SW846 5030A/8021B Purgeable VOCs by GC/PID**							
[illegible]8	XG.2001.210-3	71-43-2	Benzene	100	% Recovery	1	NA		02/15/01

Quality Control Summary

Client: **CH2MHILL**

Project: **0102196** **160660.02.FF.SA**

Explanation of codes

D	*Not applicable due to sample dilutio*
L	*Not applicable due to MDL proxim*

X0158	XG.2001.210-3	100-41-4	Ethylbenzene	99	% Recovery	1	NA		02/15/0
X0158	XG.2001.210-3	95-47-6	o-Xylene	98	% Recovery	1	NA		02/15/0
X0158	XG.2001.210-3	108-38-3/106-42	p/m-Xylenes	100	% Recovery	1	NA		02/15/0
X0158	XG.2001.210-3	108-88-3	Toluene	98	% Recovery	1	NA		02/15/0
X0163-003		**SW846 8260A Purgeable VOCs by GC/MS**							
X0163	XG.2001.240-3	75-34-3	1,1 Dichloroethene	106	% Recovery	1	NA		02/21/0
X0163	XG.2001.240-3	106-46-7	1,4 Dichlorobenzene	102	% Recovery	1	NA		02/21/0
X0163	XG.2001.240-3	71-43-2	Benzene	108	% Recovery	1	NA		02/21/0
X0163	XG.2001.240-3	108-90-7	Chlorobenzene	104	% Recovery	1	NA		02/21/0
X0163	XG.2001.240-3	108-88-3	Toluene	111	% Recovery	1	NA		02/21/0
X0163	XG.2001.240-3	79-01-6	Trichloroethene	102	% Recovery	1	NA		02/21/0
X0167-003		**SW846 3550A/8270B SVOCs by GC/MS**							
X0167	XG.2001.223-3	120-82-1	1,2,4-Trichlorobenzene	66	% Recovery	1	NA		02/22/0
X0167	XG.2001.223-3	106-46-7	1,4-Dichlorobenzene	67	% Recovery	1	NA		02/22/0
X0167	XG.2001.223-3	121-14-2	2,4-Dinitrotoluene	76	% Recovery	1	NA		02/22/0
X0167	XG.2001.223-3	95-57-8	2-Chlorophenol	72	% Recovery	1	NA		02/22/0
X0167	XG.2001.223-3	59-50-7	4-Chloro-3-methylphenol	80	% Recovery	1	NA		02/22/0
X0167	XG.2001.223-3	100-02-7	4-Nitrophenol	94	% Recovery	1	NA		02/22/0
X0167	XG.2001.223-3	83-32-9	Acenaphthene	85	% Recovery	1	NA		02/22/0
X0167	XG.2001.223-3	117-84-0	di-n-Octylpthalate	90	% Recovery	1	NA		02/22/0
X0167	XG.2001.223-3	621-64-7	n-Nitroso-di-n-propylamine	81	% Recovery	1	NA		02/22/0
X0167	XG.2001.223-3	87-86-5	Pentachlorophenol	92	% Recovery	1	NA		02/22/01
X0167	XG.2001.223-3	108-95-2	Phenol	69	% Recovery	1	NA		02/22
X0167	XG.2001.223-3	129-00-0	Pyrene	84	% Recovery	1	NA		02/22

QC Type **LCSD: Lab Control Spike Duplicate Precision** QC Matrix **SOLID**

QC Group	Run Sequence	CAS #	Analyte	Result	Units	Dilution Factor	Detection Limit	Code	Run Date
X0148-003		**SW846 ME/8015A Diesel Range Organics by GC/FID**							
X0148	XG.2001.169-3		Diesel Range Organics	1	RPD	1	NA		02/07/0
X0150-003		**SW846 5030A/8015A GRO by GC/FID**							
X0150	XG.2001.174-3		Gasoline Range Organics	7	RPD	1	NA		02/07/0
X0158-003		**SW846 5030A/8021B Purgeable VOCs by GC/PID**							
X0158	XG.2001.210-3	71-43-2	Benzene	3	RPD	1	NA		02/15/0
X0158	XG.2001.210-3	100-41-4	Ethylbenzene	2	RPD	1	NA		02/15/0
X0158	XG.2001.210-3	95-47-6	o-Xylene	3	RPD	1	NA		02/15/0
X0158	XG.2001.210-3	108-38-3/106-42	p/m-Xylenes	2	RPD	1	NA		02/15/0
X0158	XG.2001.210-3	108-88-3	Toluene	3	RPD	1	NA		02/15/0
X0163-003		**SW846 8260A Purgeable VOCs by GC/MS**							
X0163	XG.2001.240-3	75-34-3	1,1 Dichloroethene	5	RPD	1	NA		02/21/0
X0163	XG.2001.240-3	106-46-7	1,4 Dichlorobenzene	1	RPD	1	NA		02/21/0
X0163	XG.2001.240-3	71-43-2	Benzene	3	RPD	1	NA		02/21/0
X0163	XG.2001.240-3	108-90-7	Chlorobenzene	3	RPD	1	NA		02/21/0
X0163	XG.2001.240-3	108-88-3	Toluene	3	RPD	1	NA		02/2

Explanation of codes

D	*Not applicable due to sample dilution*
L	*Not applicable due to MDL proximity*

Client: **CH2MHILL**

Project: **0102196** **160660.02.FF.SA**

X0163	XG.2001.240-3	79-01-6	Trichloroethene	4	RPD	1	NA		02/21/01
X0167-003		**SW846 3550A/8270B SVOCs by GC/MS**							
X0167	XG.2001.223-3	120-82-1	1,2,4-Trichlorobenzene	< 1	RPD	1	NA		02/22/01
X0167	XG.2001.223-3	106-46-7	1,4-Dichlorobenzene	< 1	RPD	1	NA		02/22/01
X0167	XG.2001.223-3	121-14-2	2,4-Dinitrotoluene	1	RPD	1	NA		02/22/01
X0167	XG.2001.223-3	95-57-8	2-Chlorophenol	< 1	RPD	1	NA		02/22/01
X0167	XG.2001.223-3	59-50-7	4-Chloro-3-methylphenol	2	RPD	1	NA		02/22/01
X0167	XG.2001.223-3	100-02-7	4-Nitrophenol	1	RPD	1	NA		02/22/01
X0167	XG.2001.223-3	83-32-9	Acenaphthene	3	RPD	1	NA		02/22/01
X0167	XG.2001.223-3	117-84-0	di-n-Octylpthalate	< 1	RPD	1	NA		02/22/01
X0167	XG.2001.223-3	621-64-7	n-Nitroso-di-n-propylamine	< 1	RPD	1	NA		02/22/01
X0167	XG.2001.223-3	87-86-5	Pentachlorophenol	< 1	RPD	1	NA		02/22/01
X0167	XG.2001.223-3	108-95-2	Phenol	< 1	RPD	1	NA		02/22/01
X0167	XG.2001.223-3	129-00-0	Pyrene	< 1	RPD	1	NA		02/22/01

QC Type **MB: Method Blank** QC Matrix **SOLID**

QC Group	Run Sequence	CAS #	Analyte	Result	Units	Dilution Factor	Detection Limit	Code	Run Date
X0148-001		**SW846 ME/8015A Diesel Range Organics by GC/FID**							
X0148	XG.2001.169-1		Diesel Range Organics	ND	mg / Kg	1	25		02/07/01
[illegible]8-008		**SW846 ME/8015A Diesel Range Organics by GC/FID**							
X0148	XG.2001.175-1		Diesel Range Organics	ND	mg / Kg	1	25		02/08/01
X0148-011		**SW846 ME/8015A Diesel Range Organics by GC/FID**							
X0148	XG.2001.182-1		Diesel Range Organics	ND	mg / Kg	1	25		02/09/01
X0148-013		**SW846 ME/8015A Diesel Range Organics by GC/FID**							
X0148	XG.2001.194-1		Diesel Range Organics	ND	mg / Kg	1	25		02/14/01
X0148-017		**SW846 ME/8015A Diesel Range Organics by GC/FID**							
X0148	XG.2001.213-1		Diesel Range Organics	ND	mg / Kg	1	25		02/21/01
X0148-025		**SW846 ME/8015A Diesel Range Organics by GC/FID**							
X0148	XG.2001.239-1		Diesel Range Organics	ND	mg / Kg	1	25		02/27/01
X0148-026		**SW846 ME/8015A Diesel Range Organics by GC/FID**							
X0148	XG.2001.247-1		Diesel Range Organics	ND	mg / Kg	1	25		02/28/01
X0150-001		**SW846 5030A/8015A GRO by GC/FID**							
X0150	XG.2001.174-1		Gasoline Range Organics	ND	mg / Kg	1	0.25		02/07/01
X0150-008		**SW846 5030A/8015A GRO by GC/FID**							
X0150	XG.2001.183-1		Gasoline Range Organics	ND	mg / Kg	1	0.25		02/09/01
X0150-010		**SW846 5030A/8015A GRO by GC/FID**							
X0150	XG.2001.192-1		Gasoline Range Organics	ND	mg / Kg	1	0.25		02/13/01
X0150-014		**SW846 5030A/8015A GRO by GC/FID**							
X0150	XG.2001.214-1		Gasoline Range Organics	ND	mg / Kg	1	0.25		02/21/01
[illegible]50-024		**SW846 5030A/8015A GRO by GC/FID**							
[illegible]0	XG.2001.238-1		Gasoline Range Organics	ND	mg / Kg	1	0.25		02/27/01

Quality Control Summary

Client: **CH2MHILL**

Project: **0102196** **160660.02.FF.SA**

Explanation of codes

D *Not applicable due to sample dilutio*

L *Not applicable due to MDL proxim*

X0150-027		**SW846 5030A/8015A GRO by GC/FID**						
X0150	XG.2001.246-1		Gasoline Range Organics	ND	mg / Kg	1	0.25	02/28/01
X0158-001		**SW846 5030A/8021B Purgeable VOCs by GC/PID**						
X0158	XG.2001.210-1	71-43-2	Benzene	ND	mg / Kg	1	0.005	02/15/01
X0158	XG.2001.210-1	100-41-4	Ethylbenzene	ND	mg / Kg	1	0.005	02/15/01
X0158	XG.2001.210-1	95-47-6	o-Xylene	ND	mg / Kg	1	0.005	02/15/01
X0158	XG.2001.210-1	108-38-3/106-42	p/m-Xylenes	ND	mg / Kg	1	0.01	02/15/01
X0158	XG.2001.210-1	108-88-3	Toluene	ND	mg / Kg	1	0.005	02/15/01
X0158-004		**SW846 5030A/8021B Purgeable VOCs by GC/PID**						
X0158	XG.2001.210-4	71-43-2	Benzene	ND	mg / Kg	1	0.005	02/20/01
X0158	XG.2001.210-4	100-41-4	Ethylbenzene	ND	mg / Kg	1	0.005	02/20/01
X0158	XG.2001.210-4	95-47-6	o-Xylene	ND	mg / Kg	1	0.005	02/20/01
X0158	XG.2001.210-4	108-38-3/106-42	p/m-Xylenes	ND	mg / Kg	1	0.01	02/20/01
X0158	XG.2001.210-4	108-88-3	Toluene	ND	mg / Kg	1	0.005	02/20/01
X0158-017		**SW846 5030A/8021B Purgeable VOCs by GC/PID**						
X0158	XG.2001.220-1	71-43-2	Benzene	ND	mg / Kg	1	0.005	02/21/01
X0158	XG.2001.220-1	100-41-4	Ethylbenzene	ND	mg / Kg	1	0.005	02/21/01
X0158	XG.2001.220-1	95-47-6	o-Xylene	ND	mg / Kg	1	0.005	02/21/01
X0158	XG.2001.220-1	108-38-3/106-42	p/m-Xylenes	ND	mg / Kg	1	0.01	02/21/01
X0158	XG.2001.220-1	108-88-3	Toluene	ND	mg / Kg	1	0.005	02/21/01
X0158-027		**SW846 5030A/8021B Purgeable VOCs by GC/PID**						
X0158	XG.2001.220-8	71-43-2	Benzene	ND	mg / Kg	1	0.005	02/22/01
X0158	XG.2001.220-8	100-41-4	Ethylbenzene	ND	mg / Kg	1	0.005	02/22/01
X0158	XG.2001.220-8	95-47-6	o-Xylene	ND	mg / Kg	1	0.005	02/22/01
X0158	XG.2001.220-8	108-38-3/106-42	p/m-Xylenes	ND	mg / Kg	1	0.01	02/22/01
X0158	XG.2001.220-8	108-88-3	Toluene	ND	mg / Kg	1	0.005	02/22/01
X0158-033		**SW846 5030A/8021B Purgeable VOCs by GC/PID**						
X0158	XG.2001.255-1	71-43-2	Benzene	ND	mg / Kg	1	0.005	03/01/01
X0158	XG.2001.255-1	100-41-4	Ethylbenzene	ND	mg / Kg	1	0.005	03/01/01
X0158	XG.2001.255-1	95-47-6	o-Xylene	ND	mg / Kg	1	0.005	03/01/01
X0158	XG.2001.255-1	108-38-3/106-42	p/m-Xylenes	ND	mg / Kg	1	0.01	03/01/01
X0158	XG.2001.255-1	108-88-3	Toluene	ND	mg / Kg	1	0.005	03/01/01
X0163-001		**SW846 8260A Purgeable VOCs by GC/MS**						
X0163	XG.2001.240-1	75-34-3	1,1 Dichloroethane	ND	mg / Kg	1	0.005	02/21/01
X0163	XG.2001.240-1	75-34-3	1,1 Dichloroethene	ND	mg / Kg	1	0.005	02/21/01
X0163	XG.2001.240-1	71-55-6	1,1,1 Trichloroethane	ND	mg / Kg	1	0.005	02/21/01
X0163	XG.2001.240-1	630-20-6	1,1,1,2 Tetrachloroethane	ND	mg / Kg	1	0.005	02/21/01
X0163	XG.2001.240-1	79-00-5	1,1,2 Trichloroethane	ND	mg / Kg	1	0.005	02/21/01
X0163	XG.2001.240-1	79-34-5	1,1,2,2 Tetrachloroethane	ND	mg / Kg	1	0.005	02/21/01
X0163	XG.2001.240-1	106-93-4	1,2 Dibromoethane (EDB)	ND	mg / Kg	1	0.005	02/21/01
X0163	XG.2001.240-1	95-50-1	1,2 Dichlorobenzene	ND	mg / Kg	1	0.005	02/21/01
X0163	XG.2001.240-1	107-06-2	1,2 Dichloroethane	ND	mg / Kg	1	0.005	02/21/01
X0163	XG.2001.240-1	78-87-5	1,2 Dichloropropane	ND	mg / Kg	1	0.005	02/21/01
X0163	XG.2001.240-1	96-18-4	1,2,3 Trichloropropane	ND	mg / Kg	1	0.005	02/21

Quality Control Summary

Explanation of codes

D	*Not applicable due to sample dilution*
L	*Not applicable due to MDL proximity*

C nt: **CH2MHILL**

Project: **0102196** **160660.02.FF.SA**

X0163	XG.2001.240-1	95-63-6	1,2,4-Trimethylbenzene	ND	mg / Kg	1	0.005	02/21/01
X0163	XG.2001.240-1	541-73-1	1,3 Dichlorobenzene	ND	mg / Kg	1	0.005	02/21/01
X0163	XG.2001.240-1	108-67-8	1,3,5-Trimethylbenzene	ND	mg / Kg	1	0.005	02/21/01
X0163	XG.2001.240-1	764-41-0	1,4 Dichloro-2-butene	ND	mg / Kg	1	0.05	02/21/01
X0163	XG.2001.240-1	106-46-7	1,4 Dichlorobenzene	ND	mg / Kg	1	0.005	02/21/01
X0163	XG.2001.240-1	78-93-3	2-Butanone (MEK)	ND	mg / Kg	1	0.025	02/21/01
X0163	XG.2001.240-1	110-75-8	2-Chloroethylvinylether	ND	mg / Kg	1	0.025	02/21/01
X0163	XG.2001.240-1	591-78-6	2-Hexanone (MBK)	ND	mg / Kg	1	0.025	02/21/01
X0163	XG.2001.240-1	108-10-1	4-Methyl-2-pentanone (MIBK)	ND	mg / Kg	1	0.025	02/21/01
X0163	XG.2001.240-1	67-64-1	Acetone	ND	mg / Kg	1	0.05	02/21/01
X0163	XG.2001.240-1	107-02-8	Acrolein	ND	mg / Kg	1	0.1	02/21/01
X0163	XG.2001.240-1	107-13-1	Acrylonitrile	ND	mg / Kg	1	0.1	02/21/01
X0163	XG.2001.240-1	71-43-2	Benzene	ND	mg / Kg	1	0.005	02/21/01
X0163	XG.2001.240-1	75-27-4	Bromodichloromethane	ND	mg / Kg	1	0.005	02/21/01
X0163	XG.2001.240-1	75-25-2	Bromoform	ND	mg / Kg	1	0.005	02/21/01
X0163	XG.2001.240-1	74-83-9	Bromomethane	ND	mg / Kg	1	0.025	02/21/01
X0163	XG.2001.240-1	75-15-0	Carbon disulfide	ND	mg / Kg	1	0.025	02/21/01
X0163	XG.2001.240-1	56-23-5	Carbon tetrachloride	ND	mg / Kg	1	0.005	02/21/01
X0163	XG.2001.240-1	108-90-7	Chlorobenzene	ND	mg / Kg	1	0.005	02/21/01
X0163	XG.2001.240-1	124-48-1	Chlorodibromomethane	ND	mg / Kg	1	0.005	02/21/01
X0163	XG.2001.240-1	75-00-3	Chloroethane	ND	mg / Kg	1	0.025	02/21/01
X0163	XG.2001.240-1	67-66-3	Chloroform	ND	mg / Kg	1	0.005	02/21/01
X0163	XG.2001.240-1	74-87-3	Chloromethane	ND	mg / Kg	1	0.025	02/21/01
	XG.2001.240-1	156-59-2	cis-1,2 dichloroethene	ND	mg / Kg	1	0.005	02/21/01
[illegible]	XG.2001.240-1	10061-01-5	cis-1,3 dichloropropene	ND	mg / Kg	1	0.005	02/21/01
X0163	XG.2001.240-1	74-95-3	Dibromomethane	ND	mg / Kg	1	0.005	02/21/01
X0163	XG.2001.240-1	97-63-2	Ethyl methacrylate	ND	mg / Kg	1	0.025	02/21/01
X0163	XG.2001.240-1	100-41-4	Ethylbenzene	ND	mg / Kg	1	0.005	02/21/01
X0163	XG.2001.240-1		Freon 113	ND	mg / Kg	1	0.025	02/21/01
X0163	XG.2001.240-1	75-71-8	Freon 12	ND	mg / Kg	1	0.05	02/21/01
X0163	XG.2001.240-1	74-88-4	Iodomethane	ND	mg / Kg	1	0.025	02/21/01
X0163	XG.2001.240-1	1634-04-4	Methyl t-butyl ether (MTBE)	ND	mg / Kg	1	0.005	02/21/01
X0163	XG.2001.240-1	75-09-2	Methylene chloride	ND	mg / Kg	1	0.05	02/21/01
X0163	XG.2001.240-1	91-20-3	Naphthalene	ND	mg / Kg	1	0.025	02/21/01
X0163	XG.2001.240-1	95-47-6	o-Xylene	ND	mg / Kg	1	0.005	02/21/01
X0163	XG.2001.240-1	108-38-3/106-42	p/m Xylenes	ND	mg / Kg	1	0.01	02/21/01
X0163	XG.2001.240-1	100-42-5	Styrene	ND	mg / Kg	1	0.005	02/21/01
X0163	XG.2001.240-1	156-60-5	t-1,2 Dichloroethene	ND	mg / Kg	1	0.005	02/21/01
X0163	XG.2001.240-1	10061-02-6	t-1,3 Dichloropropene	ND	mg / Kg	1	0.005	02/21/01
X0163	XG.2001.240-1	127-18-4	Tetrachloroethene	ND	mg / Kg	1	0.005	02/21/01
X0163	XG.2001.240-1	108-88-3	Toluene	ND	mg / Kg	1	0.005	02/21/01
X0163	XG.2001.240-1	79-01-6	Trichloroethene	ND	mg / Kg	1	0.005	02/21/01
X0163	XG.2001.240-1	75-69-4	Trichlorofluoromethane	ND	mg / Kg	1	0.025	02/21/01
X0163	XG.2001.240-1	108-05-4	Vinyl acetate	ND	mg / Kg	1	0.025	02/21/01
X0163	XG.2001.240-1	75-01-4	Vinyl chloride	ND	mg / Kg	1	0.025	02/21/01
X0163-008		**SW846 8260A Purgeable VOCs by GC/MS**						
X0163	XG.2001.240-8	75-34-3	1,1 Dichloroethane	ND	mg / Kg	1	0.005	02/22/01
X0163	XG.2001.240-8	75-34-3	1,1 Dichloroethene	ND	mg / Kg	1	0.005	02/22/01
[illegible]3	XG.2001.240-8	71-55-6	1,1,1 Trichloroethane	ND	mg / Kg	1	0.005	02/22/01

Quality Control Summary

Client: **CH2MHILL**

Project: **0102196** **160660.02.FF.SA**

Explanation of codes

D *Not applicable due to sample dilutio*

L *Not applicable due to MDL proxim*

X0163	XG.2001.240-8	630-20-6	1,1,1,2 Tetrachloroethane	ND	mg / Kg	1	0.005	02/22/0
X0163	XG.2001.240-8	79-00-5	1,1,2 Trichloroethane	ND	mg / Kg	1	0.005	02/22/0
X0163	XG.2001.240-8	79-34-5	1,1,2,2 Tetrachloroethane	ND	mg / Kg	1	0.005	02/22/0
X0163	XG.2001.240-8	106-93-4	1,2 Dibromoethane (EDB)	ND	mg / Kg	1	0.005	02/22/0
X0163	XG.2001.240-8	95-50-1	1,2 Dichlorobenzene	ND	mg / Kg	1	0.005	02/22/0
X0163	XG.2001.240-8	107-06-2	1,2 Dichloroethane	ND	mg / Kg	1	0.005	02/22/0
X0163	XG.2001.240-8	78-87-5	1,2 Dichloropropane	ND	mg / Kg	1	0.005	02/22/0
X0163	XG.2001.240-8	96-18-4	1,2,3 Trichloropropane	ND	mg / Kg	1	0.005	02/22/0
X0163	XG.2001.240-8	95-63-6	1,2,4-Trimethylbenzene	ND	mg / Kg	1	0.005	02/22/0
X0163	XG.2001.240-8	541-73-1	1,3 Dichlorobenzene	ND	mg / Kg	1	0.005	02/22/0
X0163	XG.2001.240-8	108-67-8	1,3,5-Trimethylbenzene	ND	mg / Kg	1	0.005	02/22/0
X0163	XG.2001.240-8	764-41-0	1,4 Dichloro-2-butene	ND	mg / Kg	1	0.05	02/22/0
X0163	XG.2001.240-8	106-46-7	1,4 Dichlorobenzene	ND	mg / Kg	1	0.005	02/22/0
X0163	XG.2001.240-8	78-93-3	2-Butanone (MEK)	ND	mg / Kg	1	0.025	02/22/0
X0163	XG.2001.240-8	110-75-8	2-Chloroethylvinylether	ND	mg / Kg	1	0.025	02/22/0
X0163	XG.2001.240-8	591-78-6	2-Hexanone (MBK)	ND	mg / Kg	1	0.025	02/22/0
X0163	XG.2001.240-8	108-10-1	4-Methyl-2-pentanone (MIBK)	ND	mg / Kg	1	0.025	02/22/0
X0163	XG.2001.240-8	67-64-1	Acetone	ND	mg / Kg	1	0.05	02/22/0
X0163	XG.2001.240-8	107-02-8	Acrolein	ND	mg / Kg	1	0.1	02/22/0
X0163	XG.2001.240-8	107-13-1	Acrylonitrile	ND	mg / Kg	1	0.1	02/22/0
X0163	XG.2001.240-8	71-43-2	Benzene	ND	mg / Kg	1	0.005	02/22/0
X0163	XG.2001.240-8	75-27-4	Bromodichloromethane	ND	mg / Kg	1	0.005	02/22/0
X0163	XG.2001.240-8	75-25-2	Bromoform	ND	mg / Kg	1	0.005	02/22/0
X0163	XG.2001.240-8	74-83-9	Bromomethane	ND	mg / Kg	1	0.025	02/22/
X0163	XG.2001.240-8	75-15-0	Carbon disulfide	ND	mg / Kg	1	0.025	02/2
X0163	XG.2001.240-8	56-23-5	Carbon tetrachloride	ND	mg / Kg	1	0.005	02/22/01
X0163	XG.2001.240-8	108-90-7	Chlorobenzene	ND	mg / Kg	1	0.005	02/22/01
X0163	XG.2001.240-8	124-48-1	Chlorodibromomethane	ND	mg / Kg	1	0.005	02/22/01
X0163	XG.2001.240-8	75-00-3	Chloroethane	ND	mg / Kg	1	0.025	02/22/01
X0163	XG.2001.240-8	67-66-3	Chloroform	ND	mg / Kg	1	0.005	02/22/01
X0163	XG.2001.240-8	74-87-3	Chloromethane	ND	mg / Kg	1	0.025	02/22/01
X0163	XG.2001.240-8	156-59-2	cis-1,2 dichloroethene	ND	mg / Kg	1	0.005	02/22/01
X0163	XG.2001.240-8	10061-01-5	cis-1,3 dichloropropene	ND	mg / Kg	1	0.005	02/22/01
X0163	XG.2001.240-8	74-95-3	Dibromomethane	ND	mg / Kg	1	0.005	02/22/01
X0163	XG.2001.240-8	97-63-2	Ethyl methacrylate	ND	mg / Kg	1	0.025	02/22/01
X0163	XG.2001.240-8	100-41-4	Ethylbenzene	ND	mg / Kg	1	0.005	02/22/01
X0163	XG.2001.240-8		Freon 113	ND	mg / Kg	1	0.025	02/22/01
X0163	XG.2001.240-8	75-71-8	Freon 12	ND	mg / Kg	1	0.05	02/22/01
X0163	XG.2001.240-8	74-88-4	Iodomethane	ND	mg / Kg	1	0.025	02/22/01
X0163	XG.2001.240-8	1634-04-4	Methyl t-butyl ether (MTBE)	ND	mg / Kg	1	0.005	02/22/01
X0163	XG.2001.240-8	75-09-2	Methylene chloride	ND	mg / Kg	1	0.05	02/22/01
X0163	XG.2001.240-8	91-20-3	Naphthalene	ND	mg / Kg	1	0.025	02/22/01
X0163	XG.2001.240-8	95-47-6	o-Xylene	ND	mg / Kg	1	0.005	02/22/01
X0163	XG.2001.240-8	108-38-3/106-42	p/m Xylenes	ND	mg / Kg	1	0.01	02/22/01
X0163	XG.2001.240-8	100-42-5	Styrene	ND	mg / Kg	1	0.005	02/22/01
X0163	XG.2001.240-8	156-60-5	t-1,2 Dichloroethene	ND	mg / Kg	1	0.005	02/22/01
X0163	XG.2001.240-8	10061-02-6	t-1,3 Dichloropropene	ND	mg / Kg	1	0.005	02/22/01
X0163	XG.2001.240-8	127-18-4	Tetrachloroethene	ND	mg / Kg	1	0.005	02/22/01
X0163	XG.2001.240-8	108-88-3	Toluene	ND	mg / Kg	1	0.005	02/22/
X0163	XG.2001.240-8	79-01-6	Trichloroethene	ND	mg / Kg	1	0.005	02/2

Quality Control Summary

Explanation of codes

D *Not applicable due to sample dilution*
L *Not applicable due to MDL proximity*

Client: **CH2MHILL**
Project: **0102196** **160660.02.FF.SA**

X0163	XG.2001.240-8	75-69-4	Trichlorofluoromethane	ND	mg / Kg	1	0.025	02/22/01
X0163	XG.2001.240-8	108-05-4	Vinyl acetate	ND	mg / Kg	1	0.025	02/22/01
X0163	XG.2001.240-8	75-01-4	Vinyl chloride	ND	mg / Kg	1	0.025	02/22/01
X0163-017		**SW846 8260A Purgeable VOCs by GC/MS**						
X0163	XG.2001.240-16	75-34-3	1,1 Dichloroethane	ND	mg / Kg	1	0.005	02/23/01
X0163	XG.2001.240-16	75-34-3	1,1 Dichloroethene	ND	mg / Kg	1	0.005	02/23/01
X0163	XG.2001.240-16	71-55-6	1,1,1 Trichloroethane	ND	mg / Kg	1	0.005	02/23/01
X0163	XG.2001.240-16	630-20-6	1,1,1,2 Tetrachloroethane	ND	mg / Kg	1	0.005	02/23/01
X0163	XG.2001.240-16	79-00-5	1,1,2 Trichloroethane	ND	mg / Kg	1	0.005	02/23/01
X0163	XG.2001.240-16	79-34-5	1,1,2,2 Tetrachloroethane	ND	mg / Kg	1	0.005	02/23/01
X0163	XG.2001.240-16	106-93-4	1,2 Dibromoethane (EDB)	ND	mg / Kg	1	0.005	02/23/01
X0163	XG.2001.240-16	95-50-1	1,2 Dichlorobenzene	ND	mg / Kg	1	0.005	02/23/01
X0163	XG.2001.240-16	107-06-2	1,2 Dichloroethane	ND	mg / Kg	1	0.005	02/23/01
X0163	XG.2001.240-16	78-87-5	1,2 Dichloropropane	ND	mg / Kg	1	0.005	02/23/01
X0163	XG.2001.240-16	96-18-4	1,2,3 Trichloropropane	ND	mg / Kg	1	0.005	02/23/01
X0163	XG.2001.240-16	95-63-6	1,2,4-Trimethylbenzene	ND	mg / Kg	1	0.005	02/23/01
X0163	XG.2001.240-16	541-73-1	1,3 Dichlorobenzene	ND	mg / Kg	1	0.005	02/23/01
X0163	XG.2001.240-16	108-67-8	1,3,5-Trimethylbenzene	ND	mg / Kg	1	0.005	02/23/01
X0163	XG.2001.240-16	764-41-0	1,4 Dichloro-2-butene	ND	mg / Kg	1	0.05	02/23/01
X0163	XG.2001.240-16	106-46-7	1,4 Dichlorobenzene	ND	mg / Kg	1	0.005	02/23/01
X0163	XG.2001.240-16	78-93-3	2-Butanone (MEK)	ND	mg / Kg	1	0.025	02/23/01
X0163	XG.2001.240-16	110-75-8	2-Chloroethylvinylether	ND	mg / Kg	1	0.025	02/23/01
[illegible]	XG.2001.240-16	591-78-6	2-Hexanone (MBK)	ND	mg / Kg	1	0.025	02/23/01
[illegible]	XG.2001.240-16	108-10-1	4-Methyl-2-pentanone (MIBK)	ND	mg / Kg	1	0.025	02/23/01
X0163	XG.2001.240-16	67-64-1	Acetone	ND	mg / Kg	1	0.05	02/23/01
X0163	XG.2001.240-16	107-02-8	Acrolein	ND	mg / Kg	1	0.1	02/23/01
X0163	XG.2001.240-16	107-13-1	Acrylonitrile	ND	mg / Kg	1	0.1	02/23/01
X0163	XG.2001.240-16	71-43-2	Benzene	ND	mg / Kg	1	0.005	02/23/01
X0163	XG.2001.240-16	75-27-4	Bromodichloromethane	ND	mg / Kg	1	0.005	02/23/01
X0163	XG.2001.240-16	75-25-2	Bromoform	ND	mg / Kg	1	0.005	02/23/01
X0163	XG.2001.240-16	74-83-9	Bromomethane	ND	mg / Kg	1	0.025	02/23/01
X0163	XG.2001.240-16	75-15-0	Carbon disulfide	ND	mg / Kg	1	0.025	02/23/01
X0163	XG.2001.240-16	56-23-5	Carbon tetrachloride	ND	mg / Kg	1	0.005	02/23/01
X0163	XG.2001.240-16	108-90-7	Chlorobenzene	ND	mg / Kg	1	0.005	02/23/01
X0163	XG.2001.240-16	124-48-1	Chlorodibromomethane	ND	mg / Kg	1	0.005	02/23/01
X0163	XG.2001.240-16	75-00-3	Chloroethane	ND	mg / Kg	1	0.025	02/23/01
X0163	XG.2001.240-16	67-66-3	Chloroform	ND	mg / Kg	1	0.005	02/23/01
X0163	XG.2001.240-16	74-87-3	Chloromethane	ND	mg / Kg	1	0.025	02/23/01
X0163	XG.2001.240-16	156-59-2	cis-1,2 dichloroethene	ND	mg / Kg	1	0.005	02/23/01
X0163	XG.2001.240-16	10061-01-5	cis-1,3 dichloropropene	ND	mg / Kg	1	0.005	02/23/01
X0163	XG.2001.240-16	74-95-3	Dibromomethane	ND	mg / Kg	1	0.005	02/23/01
X0163	XG.2001.240-16	97-63-2	Ethyl methacrylate	ND	mg / Kg	1	0.025	02/23/01
X0163	XG.2001.240-16	100-41-4	Ethylbenzene	ND	mg / Kg	1	0.005	02/23/01
X0163	XG.2001.240-16		Freon 113	ND	mg / Kg	1	0.025	02/23/01
X0163	XG.2001.240-16	75-71-8	Freon 12	ND	mg / Kg	1	0.05	02/23/01
X0163	XG.2001.240-16	74-88-4	Iodomethane	ND	mg / Kg	1	0.025	02/23/01
X0163	XG.2001.240-16	1634-04-4	Methyl t-butyl ether (MTBE)	ND	mg / Kg	1	0.005	02/23/01
X0163	XG.2001.240-16	75-09-2	Methylene chloride	ND	mg / Kg	1	0.05	02/23/01
[illegible]	XG.2001.240-16	91-20-3	Naphthalene	ND	mg / Kg	1	0.025	02/23/01
[illegible]	XG.2001.240-16	95-47-6	o-Xylene	ND	mg / Kg	1	0.005	02/23/01

Quality Control Summary

Client: **CH2MHILL**

Project: **0102196** **160660.02.FF.SA**

Explanation of codes

D	*Not applicable due to sample dilut*
L	*Not applicable due to MDL proxim*

X0163	XG.2001.240-16	108-38-3/106-42	p/m Xylenes	ND	mg / Kg	1	0.01	02/23/0
X0163	XG.2001.240-16	100-42-5	Styrene	ND	mg / Kg	1	0.005	02/23/0
X0163	XG.2001.240-16	156-60-5	t-1,2 Dichloroethene	ND	mg / Kg	1	0.005	02/23/0
X0163	XG.2001.240-16	10061-02-6	t-1,3 Dichloropropene	ND	mg / Kg	1	0.005	02/23/0
X0163	XG.2001.240-16	127-18-4	Tetrachloroethene	ND	mg / Kg	1	0.005	02/23/0
X0163	XG.2001.240-16	108-88-3	Toluene	ND	mg / Kg	1	0.005	02/23/0
X0163	XG.2001.240-16	79-01-6	Trichloroethene	ND	mg / Kg	1	0.005	02/23/0
X0163	XG.2001.240-16	75-69-4	Trichlorofluoromethane	ND	mg / Kg	1	0.025	02/23/0
X0163	XG.2001.240-16	108-05-4	Vinyl acetate	ND	mg / Kg	1	0.025	02/23/0
X0163	XG.2001.240-16	75-01-4	Vinyl chloride	ND	mg / Kg	1	0.025	02/23/0
X0163-034		**SW846 8260A Purgeable VOCs by GC/MS**						
X0163	XG.2001.240-26	75-34-3	1,1 Dichloroethane	ND	mg / Kg	1	0.005	02/26/0
X0163	XG.2001.240-26	75-34-3	1,1 Dichloroethene	ND	mg / Kg	1	0.005	02/26/0
X0163	XG.2001.240-26	71-55-6	1,1,1 Trichloroethane	ND	mg / Kg	1	0.005	02/26/0
X0163	XG.2001.240-26	630-20-6	1,1,1,2 Tetrachloroethane	ND	mg / Kg	1	0.005	02/26/0
X0163	XG.2001.240-26	79-00-5	1,1,2 Trichloroethane	ND	mg / Kg	1	0.005	02/26/0
X0163	XG.2001.240-26	79-34-5	1,1,2,2 Tetrachloroethane	ND	mg / Kg	1	0.005	02/26/0
X0163	XG.2001.240-26	106-93-4	1,2 Dibromoethane (EDB)	ND	mg / Kg	1	0.005	02/26/0
X0163	XG.2001.240-26	95-50-1	1,2 Dichlorobenzene	ND	mg / Kg	1	0.005	02/26/0
X0163	XG.2001.240-26	107-06-2	1,2 Dichloroethane	ND	mg / Kg	1	0.005	02/26/0
X0163	XG.2001.240-26	78-87-5	1,2 Dichloropropane	ND	mg / Kg	1	0.005	02/26/0
X0163	XG.2001.240-26	96-18-4	1,2,3 Trichloropropane	ND	mg / Kg	1	0.005	02/26/0
X0163	XG.2001.240-26	95-63-6	1,2,4-Trimethylbenzene	ND	mg / Kg	1	0.005	02/26
X0163	XG.2001.240-26	541-73-1	1,3 Dichlorobenzene	ND	mg / Kg	1	0.005	02/26
X0163	XG.2001.240-26	108-67-8	1,3,5-Trimethylbenzene	ND	mg / Kg	1	0.005	02/26/0
X0163	XG.2001.240-26	764-41-0	1,4 Dichloro-2-butene	ND	mg / Kg	1	0.05	02/26/0
X0163	XG.2001.240-26	106-46-7	1,4 Dichlorobenzene	ND	mg / Kg	1	0.005	02/26/0
X0163	XG.2001.240-26	78-93-3	2-Butanone (MEK)	ND	mg / Kg	1	0.025	02/26/0
X0163	XG.2001.240-26	110-75-8	2-Chloroethylvinylether	ND	mg / Kg	1	0.025	02/26/0
X0163	XG.2001.240-26	591-78-6	2-Hexanone (MBK)	ND	mg / Kg	1	0.025	02/26/0
X0163	XG.2001.240-26	108-10-1	4-Methyl-2-pentanone (MIBK)	ND	mg / Kg	1	0.025	02/26/0
X0163	XG.2001.240-26	67-64-1	Acetone	ND	mg / Kg	1	0.05	02/26/0
X0163	XG.2001.240-26	107-02-8	Acrolein	ND	mg / Kg	1	0.1	02/26/0
X0163	XG.2001.240-26	107-13-1	Acrylonitrile	ND	mg / Kg	1	0.1	02/26/0
X0163	XG.2001.240-26	71-43-2	Benzene	ND	mg / Kg	1	0.005	02/26/0
X0163	XG.2001.240-26	75-27-4	Bromodichloromethane	ND	mg / Kg	1	0.005	02/26/0
X0163	XG.2001.240-26	75-25-2	Bromoform	ND	mg / Kg	1	0.005	02/26/0
X0163	XG.2001.240-26	74-83-9	Bromomethane	ND	mg / Kg	1	0.025	02/26/0
X0163	XG.2001.240-26	75-15-0	Carbon disulfide	ND	mg / Kg	1	0.025	02/26/0
X0163	XG.2001.240-26	56-23-5	Carbon tetrachloride	ND	mg / Kg	1	0.005	02/26/0
X0163	XG.2001.240-26	108-90-7	Chlorobenzene	ND	mg / Kg	1	0.005	02/26/0
X0163	XG.2001.240-26	124-48-1	Chlorodibromomethane	ND	mg / Kg	1	0.005	02/26/0
X0163	XG.2001.240-26	75-00-3	Chloroethane	ND	mg / Kg	1	0.025	02/26/0
X0163	XG.2001.240-26	67-66-3	Chloroform	ND	mg / Kg	1	0.005	02/26/0
X0163	XG.2001.240-26	74-87-3	Chloromethane	ND	mg / Kg	1	0.025	02/26/0
X0163	XG.2001.240-26	156-59-2	cis-1,2 dichloroethene	ND	mg / Kg	1	0.005	02/26/0
X0163	XG.2001.240-26	10061-01-5	cis-1,3 dichloropropene	ND	mg / Kg	1	0.005	02/26/0
X0163	XG.2001.240-26	74-95-3	Dibromomethane	ND	mg / Kg	1	0.005	02/26/0
X0163	XG.2001.240-26	97-63-2	Ethyl methacrylate	ND	mg / Kg	1	0.025	02/26

Quality Control Summary

Explanation of codes

D *Not applicable due to sample dilution*
L *Not applicable due to MDL proximity*

Client: **CH2MHILL**
Project: **0102196** **160660.02.FF.SA**

X0163	XG.2001.240-26	100-41-4	Ethylbenzene	ND	mg / Kg	1	0.005		02/26/01
X0163	XG.2001.240-26		Freon 113	ND	mg / Kg	1	0.025		02/26/01
X0163	XG.2001.240-26	75-71-8	Freon 12	ND	mg / Kg	1	0.05		02/26/01
X0163	XG.2001.240-26	74-88-4	Iodomethane	ND	mg / Kg	1	0.025		02/26/01
X0163	XG.2001.240-26	1634-04-4	Methyl t-butyl ether (MTBE)	ND	mg / Kg	1	0.005		02/26/01
X0163	XG.2001.240-26	75-09-2	Methylene chloride	ND	mg / Kg	1	0.05		02/26/01
X0163	XG.2001.240-26	91-20-3	Naphthalene	ND	mg / Kg	1	0.025		02/26/01
X0163	XG.2001.240-26	95-47-6	o-Xylene	ND	mg / Kg	1	0.005		02/26/01
X0163	XG.2001.240-26	108-38-3/106-42	p/m Xylenes	ND	mg / Kg	1	0.01		02/26/01
X0163	XG.2001.240-26	100-42-5	Styrene	ND	mg / Kg	1	0.005		02/26/01
X0163	XG.2001.240-26	156-60-5	t-1,2 Dichloroethene	ND	mg / Kg	1	0.005		02/26/01
X0163	XG.2001.240-26	10061-02-6	t-1,3 Dichloropropene	ND	mg / Kg	1	0.005		02/26/01
X0163	XG.2001.240-26	127-18-4	Tetrachloroethene	ND	mg / Kg	1	0.005		02/26/01
X0163	XG.2001.240-26	108-88-3	Toluene	ND	mg / Kg	1	0.005		02/26/01
X0163	XG.2001.240-26	79-01-6	Trichloroethene	ND	mg / Kg	1	0.005		02/26/01
X0163	XG.2001.240-26	75-69-4	Trichlorofluoromethane	ND	mg / Kg	1	0.025		02/26/01
X0163	XG.2001.240-26	108-05-4	Vinyl acetate	ND	mg / Kg	1	0.025		02/26/01
X0163	XG.2001.240-26	75-01-4	Vinyl chloride	ND	mg / Kg	1	0.025		02/26/01
X0163-035		**SW846 8260A Purgeable VOCs by GC/MS**							
X0163	XG.2001.242-1	75-34-3	1,1 Dichloroethane	ND	mg / Kg	1	0.005		02/27/01
X0163	XG.2001.242-1	75-34-3	1,1 Dichloroethene	ND	mg / Kg	1	0.005		02/27/01
X0163	XG.2001.242-1	71-55-6	1,1,1 Trichloroethane	ND	mg / Kg	1	0.005		02/27/01
	XG.2001.242-1	630-20-6	1,1,1,2 Tetrachloroethane	ND	mg / Kg	1	0.005		02/27/01
	XG.2001.242-1	79-00-5	1,1,2 Trichloroethane	ND	mg / Kg	1	0.005		02/27/01
X0163	XG.2001.242-1	79-34-5	1,1,2,2 Tetrachloroethane	ND	mg / Kg	1	0.005		02/27/01
X0163	XG.2001.242-1	106-93-4	1,2 Dibromoethane (EDB)	ND	mg / Kg	1	0.005		02/27/01
X0163	XG.2001.242-1	95-50-1	1,2 Dichlorobenzene	ND	mg / Kg	1	0.005		02/27/01
X0163	XG.2001.242-1	107-06-2	1,2 Dichloroethane	ND	mg / Kg	1	0.005		02/27/01
X0163	XG.2001.242-1	78-87-5	1,2 Dichloropropane	ND	mg / Kg	1	0.005		02/27/01
X0163	XG.2001.242-1	96-18-4	1,2,3 Trichloropropane	ND	mg / Kg	1	0.005		02/27/01
X0163	XG.2001.242-1	95-63-6	1,2,4-Trimethylbenzene	ND	mg / Kg	1	0.005		02/27/01
X0163	XG.2001.242-1	541-73-1	1,3 Dichlorobenzene	ND	mg / Kg	1	0.005		02/27/01
X0163	XG.2001.242-1	108-67-8	1,3,5-Trimethylbenzene	ND	mg / Kg	1	0.005		02/27/01
X0163	XG.2001.242-1	764-41-0	1,4 Dichloro-2-butene	ND	mg / Kg	1	0.05		02/27/01
X0163	XG.2001.242-1	106-46-7	1,4 Dichlorobenzene	ND	mg / Kg	1	0.005		02/27/01
X0163	XG.2001.242-1	78-93-3	2-Butanone (MEK)	ND	mg / Kg	1	0.025		02/27/01
X0163	XG.2001.242-1	110-75-8	2-Chloroethylvinylether	ND	mg / Kg	1	0.025		02/27/01
X0163	XG.2001.242-1	591-78-6	2-Hexanone (MBK)	ND	mg / Kg	1	0.025		02/27/01
X0163	XG.2001.242-1	108-10-1	4-Methyl-2-pentanone (MIBK)	ND	mg / Kg	1	0.025		02/27/01
X0163	XG.2001.242-1	67-64-1	Acetone	ND	mg / Kg	1	0.05		02/27/01
X0163	XG.2001.242-1	107-02-8	Acrolein	ND	mg / Kg	1	0.1		02/27/01
X0163	XG.2001.242-1	107-13-1	Acrylonitrile	ND	mg / Kg	1	0.1		02/27/01
X0163	XG.2001.242-1	71-43-2	Benzene	ND	mg / Kg	1	0.005		02/27/01
X0163	XG.2001.242-1	75-27-4	Bromodichloromethane	ND	mg / Kg	1	0.005		02/27/01
X0163	XG.2001.242-1	75-25-2	Bromoform	ND	mg / Kg	1	0.005		02/27/01
X0163	XG.2001.242-1	74-83-9	Bromomethane	ND	mg / Kg	1	0.025		02/27/01
X0163	XG.2001.242-1	75-15-0	Carbon disulfide	ND	mg / Kg	1	0.025		02/27/01
X0163	XG.2001.242-1	56-23-5	Carbon tetrachloride	ND	mg / Kg	1	0.005		02/27/01
	XG.2001.242-1	108-90-7	Chlorobenzene	ND	mg / Kg	1	0.005		02/27/01

Quality Control Summary

Client: **CH2MHILL**

Project: **0102196** **160660.02.FF.SA**

Explanation of codes

D *Not applicable due to sample dilut*

L *Not applicable due to MDL proxin*

X0163	XG.2001.242-1	124-48-1	Chlorodibromomethane	ND	mg / Kg	1	0.005	02/27/C 1
X0163	XG.2001.242-1	75-00-3	Chloroethane	ND	mg / Kg	1	0.025	02/27/C 1
X0163	XG.2001.242-1	67-66-3	Chloroform	ND	mg / Kg	1	0.005	02/27/C 1
X0163	XG.2001.242-1	74-87-3	Chloromethane	ND	mg / Kg	1	0.025	02/27/C 1
X0163	XG.2001.242-1	156-59-2	cis-1,2 dichloroethene	ND	mg / Kg	1	0.005	02/27/C 1
X0163	XG.2001.242-1	10061-01-5	cis-1,3 dichloropropene	ND	mg / Kg	1	0.005	02/27/C 1
X0163	XG.2001.242-1	74-95-3	Dibromomethane	ND	mg / Kg	1	0.005	02/27/C 1
X0163	XG.2001.242-1	97-63-2	Ethyl methacrylate	ND	mg / Kg	1	0.025	02/27/C 1
X0163	XG.2001.242-1	100-41-4	Ethylbenzene	ND	mg / Kg	1	0.005	02/27/C 1
X0163	XG.2001.242-1		Freon 113	ND	mg / Kg	1	0.025	02/27/C 1
X0163	XG.2001.242-1	75-71-8	Freon 12	ND	mg / Kg	1	0.05	02/27/C 1
X0163	XG.2001.242-1	74-88-4	Iodomethane	ND	mg / Kg	1	0.025	02/27/C 1
X0163	XG.2001.242-1	1634-04-4	Methyl t-butyl ether (MTBE)	ND	mg / Kg	1	0.005	02/27/C 1
X0163	XG.2001.242-1	75-09-2	Methylene chloride	ND	mg / Kg	1	0.05	02/27/C 1
X0163	XG.2001.242-1	91-20-3	Naphthalene	ND	mg / Kg	1	0.025	02/27/C 1
X0163	XG.2001.242-1	95-47-6	o-Xylene	ND	mg / Kg	1	0.005	02/27/C 1
X0163	XG.2001.242-1	108-38-3/106-42	p/m Xylenes	ND	mg / Kg	1	0.01	02/27/C 1
X0163	XG.2001.242-1	100-42-5	Styrene	ND	mg / Kg	1	0.005	02/27/C 1
X0163	XG.2001.242-1	156-60-5	t-1,2 Dichloroethene	ND	mg / Kg	1	0.005	02/27/C 1
X0163	XG.2001.242-1	10061-02-6	t-1,3 Dichloropropene	ND	mg / Kg	1	0.005	02/27/C 1
X0163	XG.2001.242-1	127-18-4	Tetrachloroethene	ND	mg / Kg	1	0.005	02/27/C 1
X0163	XG.2001.242-1	108-88-3	Toluene	ND	mg / Kg	1	0.005	02/27/C 1
X0163	XG.2001.242-1	79-01-6	Trichloroethene	ND	mg / Kg	1	0.005	02/27/C 1
X0163	XG.2001.242-1	75-69-4	Trichlorofluoromethane	ND	mg / Kg	1	0.025	02/2
X0163	XG.2001.242-1	108-05-4	Vinyl acetate	ND	mg / Kg	1	0.025	02/27
X0163	XG.2001.242-1	75-01-4	Vinyl chloride	ND	mg / Kg	1	0.025	02/27/C 1
X0167-001		**SW846 3550A/8270B SVOCs by GC/MS**						
X0167	XG.2001.223-1	120-82-1	1,2,4-Trichlorobenzene	ND	mg / Kg	1	0.03	02/22/C 1
X0167	XG.2001.223-1	95-50-1	1,2-Dichlorobenzene	ND	mg / Kg	1	0.03	02/22/C 1
X0167	XG.2001.223-1	541-73-1	1,3-Dichlorobenzene	ND	mg / Kg	1	0.03	02/22/C 1
X0167	XG.2001.223-1	106-46-7	1,4-Dichlorobenzene	ND	mg / Kg	1	0.03	02/22/C 1
X0167	XG.2001.223-1	90-12-0	1-Methylnaphthalene	ND	mg / Kg	1	0.03	02/22/C 1
X0167	XG.2001.223-1	58-90-2	2,3,4,6-Tetrachlorophenol	ND	mg / Kg	1	1.5	02/22/C 1
X0167	XG.2001.223-1	95-95-4	2,4,5-Trichlorophenol	ND	mg / Kg	1	0.3	02/22/C 1
X0167	XG.2001.223-1	88-06-2	2,4,6-Trichlorophenol	ND	mg / Kg	1	0.3	02/22/C 1
X0167	XG.2001.223-1	120-83-2	2,4-Dichlorophenol	ND	mg / Kg	1	0.3	02/22/C 1
X0167	XG.2001.223-1	105-67-9	2,4-Dimethylphenol	ND	mg / Kg	1	0.03	02/22/C 1
X0167	XG.2001.223-1	51-28-5	2,4-Dinitrophenol	ND	mg / Kg	1	0.67	02/22/C 1
X0167	XG.2001.223-1	121-14-2	2,4-Dinitrotoluene	ND	mg / Kg	1	0.3	02/22/C 1
X0167	XG.2001.223-1	606-20-2	2,6-Dinitrotoluene	ND	mg / Kg	1	0.3	02/22/C 1
X0167	XG.2001.223-1	91-58-7	2-Chloronaphthalene	ND	mg / Kg	1	0.03	02/22/C 1
X0167	XG.2001.223-1	95-57-8	2-Chlorophenol	ND	mg / Kg	1	0.03	02/22/C 1
X0167	XG.2001.223-1	91-57-6	2-Methylnaphthalene	ND	mg / Kg	1	0.03	02/22/C 1
X0167	XG.2001.223-1	95-48-7	2-Methylphenol	ND	mg / Kg	1	0.03	02/22/C 1
X0167	XG.2001.223-1	88-74-4	2-Nitroaniline	ND	mg / Kg	1	0.3	02/22/C 1
X0167	XG.2001.223-1	88-75-5	2-Nitrophenol	ND	mg / Kg	1	0.3	02/22/C 1
X0167	XG.2001.223-1		3+4 Methylphenol	ND	mg / Kg	1	0.03	02/22/C 1
X0167	XG.2001.223-1	91-94-1	3,3-Dichlorobenzidine	ND	mg / Kg	1	0.3	02/22/C 1
X0167	XG.2001.223-1	99-09-2	3-Nitroaniline	ND	mg / Kg	1	0.3	02/2

Quality Control Summary

Explanation of codes

D *Not applicable due to sample dilution*
L *Not applicable due to MDL proximity*

Client: **CH2MHILL**
Project: **0102196** **160660.02.FF.SA**

X0167	XG.2001.223-1	534-52-1	4,6-Dinitro-2-methylphenol	ND	mg / Kg	1	0.3		02/22/01
X0167	XG.2001.223-1	101-55-3	4-Bromophenyl-phenylether	ND	mg / Kg	1	0.03		02/22/01
X0167	XG.2001.223-1	59-50-7	4-Chloro-3-methylphenol	ND	mg / Kg	1	0.3		02/22/01
X0167	XG.2001.223-1	106-47-8	4-Chloroaniline	ND	mg / Kg	1	0.3		02/22/01
X0167	XG.2001.223-1	7005-72-3	4-Chlorophenyl-phenylether	ND	mg / Kg	1	0.03		02/22/01
X0167	XG.2001.223-1	100-01-6	4-Nitroaniline	ND	mg / Kg	1	0.3		02/22/01
X0167	XG.2001.223-1	100-02-7	4-Nitrophenol	ND	mg / Kg	1	0.6		02/22/01
X0167	XG.2001.223-1	83-32-9	Acenaphthene	ND	mg / Kg	1	0.03		02/22/01
X0167	XG.2001.223-1	208-96-8	Acenaphthylene	ND	mg / Kg	1	0.03		02/22/01
X0167	XG.2001.223-1	62-53-3	Aniline	ND	mg / Kg	1	0.3		02/22/01
X0167	XG.2001.223-1	120-12-7	Anthracene	ND	mg / Kg	1	0.03		02/22/01
X0167	XG.2001.223-1		Azobenzene&1,2-Diphenylhydrazine	ND	mg / Kg	1	0.03		02/22/01
X0167	XG.2001.223-1	56-55-3	Benzo (a) anthracene	ND	mg / Kg	1	0.03		02/22/01
X0167	XG.2001.223-1	50-32-8	Benzo(a)pyrene	ND	mg / Kg	1	0.03		02/22/01
X0167	XG.2001.223-1		Benzo(b & k)fluoranthene	ND	mg / Kg	1	0.03		02/22/01
X0167	XG.2001.223-1	191-24-2	Benzo(g,h,i)perylene	ND	mg / Kg	1	0.3		02/22/01
X0167	XG.2001.223-1	64-85-0	Benzoic acid	ND	mg / Kg	1	3		02/22/01
X0167	XG.2001.223-1	100-51-6	Benzyl alcohol	ND	mg / Kg	1	1.5		02/22/01
X0167	XG.2001.223-1	111-44-4	bis (2-Chloroethyl) ether	ND	mg / Kg	1	0.03		02/22/01
X0167	XG.2001.223-1	111-91-1	bis(2-Chloroethoxy)methane	ND	mg / Kg	1	0.03		02/22/01
X0167	XG.2001.223-1	108-60-1	bis(2-Chloroisopropyl)ether	ND	mg / Kg	1	0.03		02/22/01
X0167	XG.2001.223-1	117-81-7	bis(2-Ethylhexyl)phthalate	ND	mg / Kg	1	0.3		02/22/01
[illegible]	XG.2001.223-1	85-68-7	Butylbenzylphthalate	ND	mg / Kg	1	0.03		02/22/01
[illegible]	XG.2001.223-1	218-01-9	Chrysene	ND	mg / Kg	1	0.03		02/22/01
X0167	XG.2001.223-1	84-74-2	di-n-Butylphthalate	ND	mg / Kg	1	0.3		02/22/01
X0167	XG.2001.223-1	117-84-0	di-n-Octylpthalate	ND	mg / Kg	1	0.3		02/22/01
X0167	XG.2001.223-1	53-70-3	Dibenz(a,h)anthracene	ND	mg / Kg	1	0.3		02/22/01
X0167	XG.2001.223-1	132-64-9	Dibenzofuran	ND	mg / Kg	1	0.03		02/22/01
X0167	XG.2001.223-1	84-66-2	Diethylphthalate	ND	mg / Kg	1	0.03		02/22/01
X0167	XG.2001.223-1	131-11-3	Dimethylphthalate	ND	mg / Kg	1	0.03		02/22/01
X0167	XG.2001.223-1	206-44-0	Fluoranthene	ND	mg / Kg	1	0.03		02/22/01
X0167	XG.2001.223-1	86737	Fluorene	ND	mg / Kg	1	0.03		02/22/01
X0167	XG.2001.223-1	118-74-1	Hexachlorobenzene	ND	mg / Kg	1	0.03		02/22/01
X0167	XG.2001.223-1	87-68-3	Hexachlorobutadiene	ND	mg / Kg	1	0.03		02/22/01
X0167	XG.2001.223-1	77-47-4	Hexachlorocyclopentadiene	ND	mg / Kg	1	1.5		02/22/01
X0167	XG.2001.223-1	67-72-1	Hexachloroethane	ND	mg / Kg	1	0.03		02/22/01
X0167	XG.2001.223-1	193-39-5	Indeno(1,2,3-cd)pyrene	ND	mg / Kg	1	0.3		02/22/01
X0167	XG.2001.223-1	78-59-1	Isophorone	ND	mg / Kg	1	0.03		02/22/01
X0167	XG.2001.223-1	621-64-7	n-Nitroso-di-n-propylamine	ND	mg / Kg	1	0.03		02/22/01
X0167	XG.2001.223-1	62-75-9	n-Nitroso-dimethyl-amine	ND	mg / Kg	1	0.3		02/22/01
X0167	XG.2001.223-1	86-30-6	n-Nitrosodiphenylamine	ND	mg / Kg	1	0.03		02/22/01
X0167	XG.2001.223-1	91-20-3	Naphthalene	ND	mg / Kg	1	0.03		02/22/01
X0167	XG.2001.223-1	98-95-3	Nitrobenzene	ND	mg / Kg	1	0.03		02/22/01
X0167	XG.2001.223-1	87-86-5	Pentachlorophenol	ND	mg / Kg	1	0.3		02/22/01
X0167	XG.2001.223-1	85-01-8	Phenanthrene	ND	mg / Kg	1	0.03		02/22/01
X0167	XG.2001.223-1	108-95-2	Phenol	ND	mg / Kg	1	0.3		02/22/01
X0167	XG.2001.223-1	129-00-0	Pyrene	ND	mg / Kg	1	0.03		02/22/01
X0167	XG.2001.223-1	110-86-1	Pyridine	ND	mg / Kg	1	0.3		02/22/01

Quality Control Summary

Client: **CH2MHILL**

Project: **0102196** **160660.02.FF.SA**

Explanation of codes

D *Not applicable due to sample dilutio*

L *Not applicable due to MDL proxim*

X0167-009 **SW846 3550A/8270B SVOCs by GC/MS**

X0167	XG.2001.235-1	120-82-1	1,2,4-Trichlorobenzene	ND	mg / Kg	1	0.03	02/23/01
X0167	XG.2001.235-1	95-50-1	1,2-Dichlorobenzene	ND	mg / Kg	1	0.03	02/23/01
X0167	XG.2001.235-1	541-73-1	1,3-Dichlorobenzene	ND	mg / Kg	1	0.03	02/23/01
X0167	XG.2001.235-1	106-46-7	1,4-Dichlorobenzene	ND	mg / Kg	1	0.03	02/23/01
X0167	XG.2001.235-1	90-12-0	1-Methylnaphthalene	ND	mg / Kg	1	0.03	02/23/01
X0167	XG.2001.235-1	58-90-2	2,3,4,6-Tetrachlorophenol	ND	mg / Kg	1	1.5	02/23/01
X0167	XG.2001.235-1	95-95-4	2,4,5-Trichlorophenol	ND	mg / Kg	1	0.3	02/23/01
X0167	XG.2001.235-1	88-06-2	2,4,6-Trichlorophenol	ND	mg / Kg	1	0.3	02/23/01
X0167	XG.2001.235-1	120-83-2	2,4-Dichlorophenol	ND	mg / Kg	1	0.3	02/23/01
X0167	XG.2001.235-1	105-67-9	2,4-Dimethylphenol	ND	mg / Kg	1	0.03	02/23/01
X0167	XG.2001.235-1	51-28-5	2,4-Dinitrophenol	ND	mg / Kg	1	0.67	02/23/01
X0167	XG.2001.235-1	121-14-2	2,4-Dinitrotoluene	ND	mg / Kg	1	0.3	02/23/01
X0167	XG.2001.235-1	606-20-2	2,6-Dinitrotoluene	ND	mg / Kg	1	0.3	02/23/01
X0167	XG.2001.235-1	91-58-7	2-Chloronaphthalene	ND	mg / Kg	1	0.03	02/23/01
X0167	XG.2001.235-1	95-57-8	2-Chlorophenol	ND	mg / Kg	1	0.03	02/23/01
X0167	XG.2001.235-1	91-57-6	2-Methylnaphthalene	ND	mg / Kg	1	0.03	02/23/01
X0167	XG.2001.235-1	95-48-7	2-Methylphenol	ND	mg / Kg	1	0.03	02/23/01
X0167	XG.2001.235-1	88-74-4	2-Nitroaniline	ND	mg / Kg	1	0.3	02/23/01
X0167	XG.2001.235-1	88-75-5	2-Nitrophenol	ND	mg / Kg	1	0.3	02/23/01
X0167	XG.2001.235-1		3+4 Methylphenol	ND	mg / Kg	1	0.03	02/23/01
X0167	XG.2001.235-1	91-94-1	3,3-Dichlorobenzidine	ND	mg / Kg	1	0.3	02/23/01
X0167	XG.2001.235-1	99-09-2	3-Nitroaniline	ND	mg / Kg	1	0.3	02/23/01
X0167	XG.2001.235-1	534-52-1	4,6-Dinitro-2-methylphenol	ND	mg / Kg	1	0.3	02/23
X0167	XG.2001.235-1	101-55-3	4-Bromophenyl-phenylether	ND	mg / Kg	1	0.03	02/23/0
X0167	XG.2001.235-1	59-50-7	4-Chloro-3-methylphenol	ND	mg / Kg	1	0.3	02/23/01
X0167	XG.2001.235-1	106-47-8	4-Chloroaniline	ND	mg / Kg	1	0.3	02/23/01
X0167	XG.2001.235-1	7005-72-3	4-Chlorophenyl-phenylether	ND	mg / Kg	1	0.03	02/23/01
X0167	XG.2001.235-1	100-01-6	4-Nitroaniline	ND	mg / Kg	1	0.3	02/23/01
X0167	XG.2001.235-1	100-02-7	4-Nitrophenol	ND	mg / Kg	1	0.6	02/23/01
X0167	XG.2001.235-1	83-32-9	Acenaphthene	ND	mg / Kg	1	0.03	02/23/01
X0167	XG.2001.235-1	208-96-8	Acenaphthylene	ND	mg / Kg	1	0.03	02/23/01
X0167	XG.2001.235-1	62-53-3	Aniline	ND	mg / Kg	1	0.3	02/23/01
X0167	XG.2001.235-1	120-12-7	Anthracene	ND	mg / Kg	1	0.03	02/23/01
X0167	XG.2001.235-1		Azobenzene&1,2-Diphenylhydrazine	ND	mg / Kg	1	0.03	02/23/01
X0167	XG.2001.235-1	56-55-3	Benzo (a) anthracene	ND	mg / Kg	1	0.03	02/23/01
X0167	XG.2001.235-1	50-32-8	Benzo(a)pyrene	ND	mg / Kg	1	0.03	02/23/01
X0167	XG.2001.235-1		Benzo(b & k)fluoranthene	ND	mg / Kg	1	0.03	02/23/01
X0167	XG.2001.235-1	191-24-2	Benzo(g,h,i)perylene	ND	mg / Kg	1	0.3	02/23/01
X0167	XG.2001.235-1	64-85-0	Benzoic acid	ND	mg / Kg	1	3	02/23/01
X0167	XG.2001.235-1	100-51-6	Benzyl alcohol	ND	mg / Kg	1	1.5	02/23/01
X0167	XG.2001.235-1	111-44-4	bis (2-Chloroethyl) ether	ND	mg / Kg	1	0.03	02/23/01
X0167	XG.2001.235-1	111-91-1	bis(2-Chloroethoxy)methane	ND	mg / Kg	1	0.03	02/23/01
X0167	XG.2001.235-1	108-60-1	bis(2-Chloroisopropyl)ether	ND	mg / Kg	1	0.03	02/23/01
X0167	XG.2001.235-1	117-81-7	bis(2-Ethylhexyl)phthalate	ND	mg / Kg	1	0.3	02/23/01
X0167	XG.2001.235-1	85-68-7	Butylbenzylphthalate	ND	mg / Kg	1	0.03	02/23/01
X0167	XG.2001.235-1	218-01-9	Chrysene	ND	mg / Kg	1	0.03	02/23/01
X0167	XG.2001.235-1	84-74-2	di-n-Butylphthalate	ND	mg / Kg	1	0.3	02/23/01
X0167	XG.2001.235-1	117-84-0	di-n-Octylpthalate	ND	mg / Kg	1	0.3	02/23

Quality Control Summary

Explanation of codes

D	*Not applicable due to sample dilution*
L	*Not applicable due to MDL proximity*

Client: **CH2MHILL**

Project: **0102196** **160660.02.FF.SA**

X0167	XG.2001.235-1	53-70-3	Dibenz(a,h)anthracene	ND	mg / Kg	1	0.3		02/23/01
X0167	XG.2001.235-1	132-64-9	Dibenzofuran	ND	mg / Kg	1	0.03		02/23/01
X0167	XG.2001.235-1	84-66-2	Diethylphthalate	ND	mg / Kg	1	0.03		02/23/01
X0167	XG.2001.235-1	131-11-3	Dimethylphthalate	ND	mg / Kg	1	0.03		02/23/01
X0167	XG.2001.235-1	206-44-0	Fluoranthene	ND	mg / Kg	1	0.03		02/23/01
X0167	XG.2001.235-1	86737	Fluorene	ND	mg / Kg	1	0.03		02/23/01
X0167	XG.2001.235-1	118-74-1	Hexachlorobenzene	ND	mg / Kg	1	0.03		02/23/01
X0167	XG.2001.235-1	87-68-3	Hexachlorobutadiene	ND	mg / Kg	1	0.03		02/23/01
X0167	XG.2001.235-1	77-47-4	Hexachlorocyclopentadiene	ND	mg / Kg	1	1.5		02/23/01
X0167	XG.2001.235-1	67-72-1	Hexachloroethane	ND	mg / Kg	1	0.03		02/23/01
X0167	XG.2001.235-1	193-39-5	Indeno(1,2,3-cd)pyrene	ND	mg / Kg	1	0.3		02/23/01
X0167	XG.2001.235-1	78-59-1	Isophorone	ND	mg / Kg	1	0.03		02/23/01
X0167	XG.2001.235-1	621-64-7	n-Nitroso-di-n-propylamine	ND	mg / Kg	1	0.03		02/23/01
X0167	XG.2001.235-1	62-75-9	n-Nitroso-dimethyl-amine	ND	mg / Kg	1	0.3		02/23/01
X0167	XG.2001.235-1	86-30-6	n-Nitrosodiphenylamine	ND	mg / Kg	1	0.03		02/23/01
X0167	XG.2001.235-1	91-20-3	Naphthalene	ND	mg / Kg	1	0.03		02/23/01
X0167	XG.2001.235-1	98-95-3	Nitrobenzene	ND	mg / Kg	1	0.03		02/23/01
X0167	XG.2001.235-1	87-86-5	Pentachlorophenol	ND	mg / Kg	1	0.3		02/23/01
X0167	XG.2001.235-1	85-01-8	Phenanthrene	ND	mg / Kg	1	0.03		02/23/01
X0167	XG.2001.235-1	108-95-2	Phenol	ND	mg / Kg	1	0.3		02/23/01
X0167	XG.2001.235-1	129-00-0	Pyrene	ND	mg / Kg	1	0.03		02/23/01
X0167	XG.2001.235-1	110-86-1	Pyridine	ND	mg / Kg	1	0.3		02/23/01

Type **MS: Matrix Spike** QC Matrix **SOLID**

QC Group	Run Sequence	CAS #	Analyte	Result	Units	Dilution Factor	Detection Limit	Code	Run Date
X0148-005		**SW846 ME/8015A Diesel Range Organics by GC/FID**							
X0148	XG.2001.169-5		Diesel Range Organics	99	% Recovery	1	NA		02/07/01
X0150-006		**SW846 5030A/8015A GRO by GC/FID**							
X0150	XG.2001.174-6		Gasoline Range Organics	94	% Recovery	1	NA		02/07/01
X0158-006		**SW846 5030A/8021B Purgeable VOCs by GC/PID**							
X0158	XG.2001.210-6	71-43-2	Benzene	108	% Recovery	1	NA		02/20/01
X0158	XG.2001.210-6	100-41-4	Ethylbenzene	104	% Recovery	1	NA		02/20/01
X0158	XG.2001.210-6	95-47-6	o-Xylene	108	% Recovery	1	NA		02/20/01
X0158	XG.2001.210-6	108-38-3/106-42	p/m-Xylenes	107	% Recovery	1	NA		02/20/01
X0158	XG.2001.210-6	108-88-3	Toluene	106	% Recovery	1	NA		02/20/01
X0163-005		**SW846 8260A Purgeable VOCs by GC/MS**							
X0163	XG.2001.240-5	75-34-3	1,1 Dichloroethene	110	% Recovery	1	NA		02/21/01
X0163	XG.2001.240-5	106-46-7	1,4 Dichlorobenzene	106	% Recovery	1	NA		02/21/01
X0163	XG.2001.240-5	71-43-2	Benzene	112	% Recovery	1	NA		02/21/01
X0163	XG.2001.240-5	108-90-7	Chlorobenzene	108	% Recovery	1	NA		02/21/01
X0163	XG.2001.240-5	108-88-3	Toluene	115	% Recovery	1	NA		02/21/01
X0163	XG.2001.240-5	79-01-6	Trichloroethene	105	% Recovery	1	NA		02/21/01
'67-005		**SW846 3550A/8270B SVOCs by GC/MS**							
67	XG.2001.223-5	120-82-1	1,2,4-Trichlorobenzene	85	% Recovery	1	NA		02/22/01

Quality Control Summary

Client: **CH2MHILL**

Project: **0102196** **160660.02.FF.SA**

Explanation of codes

D	*Not applicable due to sample dilut*
L	*Not applicable due to MDL proxi*

X0167	XG.2001.223-5	106-46-7	1,4-Dichlorobenzene	85	% Recovery	1	NA		02/22/01
X0167	XG.2001.223-5	121-14-2	2,4-Dinitrotoluene	89	% Recovery	1	NA		02/22/01
X0167	XG.2001.223-5	95-57-8	2-Chlorophenol	92	% Recovery	1	NA		02/22/01
X0167	XG.2001.223-5	59-50-7	4-Chloro-3-methylphenol	98	% Recovery	1	NA		02/22/01
X0167	XG.2001.223-5	100-02-7	4-Nitrophenol	110	% Recovery	1	NA		02/22/01
X0167	XG.2001.223-5	83-32-9	Acenaphthene	105	% Recovery	1	NA		02/22/01
X0167	XG.2001.223-5	117-84-0	di-n-Octylpthalate	115	% Recovery	1	NA		02/22/01
X0167	XG.2001.223-5	621-64-7	n-Nitroso-di-n-propylamine	98	% Recovery	1	NA		02/22/01
X0167	XG.2001.223-5	87-86-5	Pentachlorophenol	115	% Recovery	1	NA		02/22/01
X0167	XG.2001.223-5	108-95-2	Phenol	86	% Recovery	1	NA		02/22/01
X0167	XG.2001.223-5	129-00-0	Pyrene	103	% Recovery	1	NA		02/22/01

QC Type **MSD: Matrix Spike Duplicate Accuracy** QC Matrix **SOLID**

QC Group	Run Sequence	CAS #	Analyte	Result	Units	Dilution Factor	Detection Limit	Code	Run Date
X0148-006		**SW846 ME/8015A Diesel Range Organics by GC/FID**							
X0148	XG.2001.169-6		Diesel Range Organics	96	% Recovery	1	NA		02/07/01
X0150-007		**SW846 5030A/8015A GRO by GC/FID**							
X0150	XG.2001.174-7		Gasoline Range Organics	92	% Recovery	1	NA		02/07/01
X0158-007		**SW846 5030A/8021B Purgeable VOCs by GC/PID**							
X0158	XG.2001.210-7	71-43-2	Benzene	104	% Recovery	1	NA		02/2
X0158	XG.2001.210-7	100-41-4	Ethylbenzene	102	% Recovery	1	NA		02/20/01
X0158	XG.2001.210-7	95-47-6	o-Xylene	105	% Recovery	1	NA		02/20/01
X0158	XG.2001.210-7	108-38-3/106-42	p/m-Xylenes	105	% Recovery	1	NA		02/20/01
X0158	XG.2001.210-7	108-88-3	Toluene	103	% Recovery	1	NA		02/20/01
X0163-006		**SW846 8260A Purgeable VOCs by GC/MS**							
X0163	XG.2001.240-6	75-34-3	1,1 Dichloroethene	105	% Recovery	1	NA		02/21/01
X0163	XG.2001.240-6	106-46-7	1,4 Dichlorobenzene	103	% Recovery	1	NA		02/21/01
X0163	XG.2001.240-6	71-43-2	Benzene	108	% Recovery	1	NA		02/21/01
X0163	XG.2001.240-6	108-90-7	Chlorobenzene	106	% Recovery	1	NA		02/21/01
X0163	XG.2001.240-6	108-88-3	Toluene	112	% Recovery	1	NA		02/21/01
X0163	XG.2001.240-6	79-01-6	Trichloroethene	101	% Recovery	1	NA		02/21/01
X0167-006		**SW846 3550A/8270B SVOCs by GC/MS**							
X0167	XG.2001.223-6	120-82-1	1,2,4-Trichlorobenzene	70	% Recovery	1	NA		02/22/01
X0167	XG.2001.223-6	106-46-7	1,4-Dichlorobenzene	70	% Recovery	1	NA		02/22/01
X0167	XG.2001.223-6	121-14-2	2,4-Dinitrotoluene	75	% Recovery	1	NA		02/22/01
X0167	XG.2001.223-6	95-57-8	2-Chlorophenol	75	% Recovery	1	NA		02/22/01
X0167	XG.2001.223-6	59-50-7	4-Chloro-3-methylphenol	83	% Recovery	1	NA		02/22/01
X0167	XG.2001.223-6	100-02-7	4-Nitrophenol	94	% Recovery	1	NA		02/22/01
X0167	XG.2001.223-6	83-32-9	Acenaphthene	86	% Recovery	1	NA		02/22/01
X0167	XG.2001.223-6	117-84-0	di-n-Octylpthalate	93	% Recovery	1	NA		02/22/01
X0167	XG.2001.223-6	621-64-7	n-Nitroso-di-n-propylamine	82	% Recovery	1	NA		02/22/01
X0167	XG.2001.223-6	87-86-5	Pentachlorophenol	96	% Recovery	1	NA		02/22/01
X0167	XG.2001.223-6	108-95-2	Phenol	72	% Recovery	1	NA		02/22/01
X0167	XG.2001.223-6	129-00-0	Pyrene	85	% Recovery	1	NA		02/2

Quality Control Summary

Client: CH2MHILL

Project: 0102196 160660.02.FF.SA

Explanation of codes

D *Not applicable due to sample dilution*

L *Not applicable due to MDL proximity*

QC Type **MSD: Matrix Spike Duplicate Precision** QC Matrix **SOLID**

QC Group	Run Sequence	CAS #	Analyte	Result	Units	Dilution Factor	Detection Limit	Code	Run Date
X0148-006		**SW846 ME/8015A Diesel Range Organics by GC/FID**							
X0148	XG.2001.169-6		Diesel Range Organics	3	RPD	1	NA		02/07/01
X0150-007		**SW846 5030A/8015A GRO by GC/FID**							
X0150	XG.2001.174-7		Gasoline Range Organics	3	RPD	1	NA		02/07/01
X0158-007		**SW846 5030A/8021B Purgeable VOCs by GC/PID**							
X0158	XG.2001.210-7	71-43-2	Benzene	3	RPD	1	NA		02/20/01
X0158	XG.2001.210-7	100-41-4	Ethylbenzene	2	RPD	1	NA		02/20/01
X0158	XG.2001.210-7	95-47-6	o-Xylene	3	RPD	1	NA		02/20/01
X0158	XG.2001.210-7	108-38-3/106-42	p/m-Xylenes	2	RPD	1	NA		02/20/01
X0158	XG.2001.210-7	108-88-3	Toluene	3	RPD	1	NA		02/20/01
X0163-006		**SW846 8260A Purgeable VOCs by GC/MS**							
X0163	XG.2001.240-6	75-34-3	1,1 Dichloroethene	5	RPD	1	NA		02/21/01
X0163	XG.2001.240-6	106-46-7	1,4 Dichlorobenzene	3	RPD	1	NA		02/21/01
X0163	XG.2001.240-6	71-43-2	Benzene	4	RPD	1	NA		02/21/01
X0163	XG.2001.240-6	108-90-7	Chlorobenzene	2	RPD	1	NA		02/21/01
X0163	XG.2001.240-6	108-88-3	Toluene	3	RPD	1	NA		02/21/01
X0163	XG.2001.240-6	79-01-6	Trichloroethene	4	RPD	1	NA		02/21/01
X0167-006		**SW846 3550A/8270B SVOCs by GC/MS**							
X0167	XG.2001.223-6	120-82-1	1,2,4-Trichlorobenzene	20	RPD	1	NA		02/22/01
X0167	XG.2001.223-6	106-46-7	1,4-Dichlorobenzene	20	RPD	1	NA		02/22/01
X0167	XG.2001.223-6	121-14-2	2,4-Dinitrotoluene	18	RPD	1	NA		02/22/01
X0167	XG.2001.223-6	95-57-8	2-Chlorophenol	20	RPD	1	NA		02/22/01
X0167	XG.2001.223-6	59-50-7	4-Chloro-3-methylphenol	17	RPD	1	NA		02/22/01
X0167	XG.2001.223-6	100-02-7	4-Nitrophenol	16	RPD	1	NA		02/22/01
X0167	XG.2001.223-6	83-32-9	Acenaphthene	19	RPD	1	NA		02/22/01
X0167	XG.2001.223-6	117-84-0	di-n-Octylpthalate	21	RPD	1	NA		02/22/01
X0167	XG.2001.223-6	621-64-7	n-Nitroso-di-n-propylamine	18	RPD	1	NA		02/22/01
X0167	XG.2001.223-6	87-86-5	Pentachlorophenol	18	RPD	1	NA		02/22/01
X0167	XG.2001.223-6	108-95-2	Phenol	18	RPD	1	NA		02/22/01
X0167	XG.2001.223-6	129-00-0	Pyrene	19	RPD	1	NA		02/22/01

Surrogate Summary: QC

Client: **CH2MHILL**

ct: **0102196** **160660.02.FF.SA**

QC Type **LCS** QC Matrix **SOLID**

QC Group	Run Sequence	CAS #	Analyte	Result	Units	Dilution Factor	Detection Limit	Code	Run Date
X0148-002		DRO							
X0148	XG.2001.169-2	NA	O-terphenyl	102	% Recovery	1	NA		02/07/01
X0158-002		BTEXALL							
X0158	XG.2001.210-2	NA	4-Bromofluorobenzene	98	% Recovery	1	NA		02/15/01
X0158	XG.2001.210-2	NA	aaa-Trifluorotoluene	100	% Recovery	1	NA		02/15/01
X0163-002		8260							
X0163	XG.2001.240-2	NA	1,2 Dichloroethane-D4 (SS)	114	% Recovery	1	NA		02/21/01
X0163	XG.2001.240-2	NA	4-Bromofluorobenzene (SS)	109	% Recovery	1	NA		02/21/01
X0163	XG.2001.240-2	NA	Dibromofluoromethane (SS)	104	% Recovery	1	NA		02/21/01
X0163	XG.2001.240-2	NA	Toluene-D8 (SS)	103	% Recovery	1	NA		02/21/01
X0167-002		8270							
X0167	XG.2001.223-2	NA	*2,4,6-TRIBROMOPHENOL	96	% Recovery	1	NA		02/22/01
X0167	XG.2001.223-2	NA	*2-FLUOROBIPHENYL	84	% Recovery	1	NA		02/22/01
X0167	XG.2001.223-2	NA	*2-FLUOROPHENOL	67	% Recovery	1	NA		02/22/01
X0167	XG.2001.223-2	NA	*NITROBENZENE-D5	78	% Recovery	1	NA		02/22/01
X0167	XG.2001.223-2	NA	*PHENOL-D6	77	% Recovery	1	NA		02/22/01
	XG.2001.223-2	NA	*TERPHENYL-D14	87	% Recovery	1	NA		02/22/01

QC Type **LCSD** QC Matrix **SOLID**

QC Group	Run Sequence	CAS #	Analyte	Result	Units	Dilution Factor	Detection Limit	Code	Run Date
X0148-003		DRO							
X0148	XG.2001.169-3	NA	O-terphenyl	104	% Recovery	1	NA		02/07/01
X0150-003		GRO							
X0150	XG.2001.174-3	NA	4-Bromofluorobenzene-FID	100	% Recovery	1	NA		02/07/01
X0150	XG.2001.174-3	NA	4-Bromofluorobenzene-PID	ND	% Recovery	1	NA		02/07/01
X0150	XG.2001.174-3	NA	aaa-Trifluorotoluene-FID	107	% Recovery	1	NA		02/07/01
X0150	XG.2001.174-3	NA	aaa-Trifluorotoluene-PID	ND	% Recovery	1	NA		02/07/01
X0158-003		BTEXALL							
X0158	XG.2001.210-3	NA	4-Bromofluorobenzene	100	% Recovery	1	NA		02/15/01
X0158	XG.2001.210-3	NA	aaa-Trifluorotoluene	99	% Recovery	1	NA		02/15/01
X0163-003		8260							
X0163	XG.2001.240-3	NA	1,2 Dichloroethane-D4 (SS)	112	% Recovery	1	NA		02/21/01
X0163	XG.2001.240-3	NA	4-Bromofluorobenzene (SS)	107	% Recovery	1	NA		02/21/01
X0163	XG.2001.240-3	NA	Dibromofluoromethane (SS)	103	% Recovery	1	NA		02/21/01
X0163	XG.2001.240-3	NA	Toluene-D8 (SS)	103	% Recovery	1	NA		02/21/01
67-003		8270							
7	XG.2001.223-3	NA	*2,4,6-TRIBROMOPHENOL	96	% Recovery	1	NA		02/22/01

Surrogate Summary: QC

Client: **CH2MHILL**

Project: **0102196** **160660.02.FF.SA**

X0167	XG.2001.223-3	NA	*2-FLUOROBIPHENYL	86	% Recovery	1	NA		02/22/0
X0167	XG.2001.223-3	NA	*2-FLUOROPHENOL	68	% Recovery	1	NA		02/22/0
X0167	XG.2001.223-3	NA	*NITROBENZENE-D5	77	% Recovery	1	NA		02/22/0
X0167	XG.2001.223-3	NA	*PHENOL-D6	78	% Recovery	1	NA		02/22/0
X0167	XG.2001.223-3	NA	*TERPHENYL-D14	86	% Recovery	1	NA		02/22/0

QC Type **MB** QC Matrix **SOLID**

QC Group	Run Sequence	CAS #	Analyte	Result	Units	Dilution Factor	Detection Limit	Code	Run Date
X0148-001		DRO							
X0148	XG.2001.169-1	NA	O-terphenyl	92	% Recovery	1	NA		02/07/01
X0148-008		DRO							
X0148	XG.2001.175-1	NA	O-terphenyl	92	% Recovery	1	NA		02/08/01
X0148-011		DRO							
X0148	XG.2001.182-1	NA	O-terphenyl	90	% Recovery	1	NA		02/09/01
X0148-013		DRO							
X0148	XG.2001.194-1	NA	O-terphenyl	87	% Recovery	1	NA		02/14/01
X0148-017		DRO							
X0148	XG.2001.213-1	NA	O-terphenyl	88	% Recovery	1	NA		02/21/01
X0148-025		DRO							
X0148	XG.2001.239-1	NA	O-terphenyl	88	% Recovery	1	NA		02/27/01
X0148-026		DRO							
X0148	XG.2001.247-1	NA	O-terphenyl	81	% Recovery	1	NA		02/28/01
X0150-001		GRO							
X0150	XG.2001.174-1	NA	4-Bromofluorobenzene-FID	87	% Recovery	1	NA		02/07/01
X0150	XG.2001.174-1	NA	4-Bromofluorobenzene-PID	ND	% Recovery	1	NA		02/07/01
X0150	XG.2001.174-1	NA	aaa-Trifluorotoluene-FID	102	% Recovery	1	NA		02/07/01
X0150	XG.2001.174-1	NA	aaa-Trifluorotoluene-PID	ND	% Recovery	1	NA		02/07/01
X0150-008		GRO							
X0150	XG.2001.183-1	NA	4-Bromofluorobenzene-FID	87	% Recovery	1	NA		02/09/01
X0150	XG.2001.183-1	NA	4-Bromofluorobenzene-PID	ND	% Recovery	1	NA		02/09/01
X0150	XG.2001.183-1	NA	aaa-Trifluorotoluene-FID	105	% Recovery	1	NA		02/09/01
X0150	XG.2001.183-1	NA	aaa-Trifluorotoluene-PID	ND	% Recovery	1	NA		02/09/01
X0150-010		GRO							
X0150	XG.2001.192-1	NA	4-Bromofluorobenzene-FID	90	% Recovery	1	NA		02/13/01
X0150	XG.2001.192-1	NA	4-Bromofluorobenzene-PID	ND	% Recovery	1	NA		02/13/01
X0150	XG.2001.192-1	NA	aaa-Trifluorotoluene-FID	105	% Recovery	1	NA		02/13/01
X0150	XG.2001.192-1	NA	aaa-Trifluorotoluene-PID	ND	% Recovery	1	NA		02/13/01
X0150-014		GRO							
X0150	XG.2001.214-1	NA	4-Bromofluorobenzene-FID	88	% Recovery	1	NA		02/21/01
X0150	XG.2001.214-1	NA	4-Bromofluorobenzene-PID	28	% Recovery	1	NA		02/21/01
X0150	XG.2001.214-1	NA	aaa-Trifluorotoluene-FID	102	% Recovery	1	NA		02/21/01
X0150	XG.2001.214-1	NA	aaa-Trifluorotoluene-PID	17	% Recovery	1	NA		02/2

Surrogate Summary: QC

Client: **CH2MHILL**

Project: **0102196** **160660.02.FF.SA**

X0150-024		**GRO**							
X0150	XG.2001.238-1	NA	4-Bromofluorobenzene-FID	90	% Recovery	1	NA		02/27/01
X0150	XG.2001.238-1	NA	4-Bromofluorobenzene-PID	437	% Recovery	1	NA		02/27/01
X0150	XG.2001.238-1	NA	aaa-Trifluorotoluene-FID	104	% Recovery	1	NA		02/27/01
X0150	XG.2001.238-1	NA	aaa-Trifluorotoluene-PID	116	% Recovery	1	NA		02/27/01
X0150-027		**GRO**							
X0150	XG.2001.246-1	NA	4-Bromofluorobenzene-FID	88	% Recovery	1	NA		02/28/01
X0150	XG.2001.246-1	NA	4-Bromofluorobenzene-PID	ND	% Recovery	1	NA		02/28/01
X0150	XG.2001.246-1	NA	aaa-Trifluorotoluene-FID	101	% Recovery	1	NA		02/28/01
X0150	XG.2001.246-1	NA	aaa-Trifluorotoluene-PID	77	% Recovery	1	NA		02/28/01
X0158-001		**BTEXALL**							
X0158	XG.2001.210-1	NA	4-Bromofluorobenzene	98	% Recovery	1	NA		02/15/01
X0158	XG.2001.210-1	NA	aaa-Trifluorotoluene	100	% Recovery	1	NA		02/15/01
X0158-004		**BTEXALL**							
X0158	XG.2001.210-4	NA	4-Bromofluorobenzene	100	% Recovery	1	NA		02/20/01
X0158	XG.2001.210-4	NA	aaa-Trifluorotoluene	100	% Recovery	1	NA		02/20/01
X0158-017		**BTEXALL**							
X0158	XG.2001.220-1	NA	4-Bromofluorobenzene	98	% Recovery	1	NA		02/21/01
X0158	XG.2001.220-1	NA	aaa-Trifluorotoluene	100	% Recovery	1	NA		02/21/01
X0158-027		**BTEXALL**							
X0158	XG.2001.220-8	NA	4-Bromofluorobenzene	98	% Recovery	1	NA		02/22/01
	XG.2001.220-8	NA	aaa-Trifluorotoluene	100	% Recovery	1	NA		02/22/01
X0158-033		**BTEXALL**							
X0158	XG.2001.255-1	NA	4-Bromofluorobenzene	97	% Recovery	1	NA		03/01/01
X0158	XG.2001.255-1	NA	aaa-Trifluorotoluene	99	% Recovery	1	NA		03/01/01
X0163-001		**8260**							
X0163	XG.2001.240-1	NA	1,2 Dichloroethane-D4 (SS)	113	% Recovery	1	NA		02/21/01
X0163	XG.2001.240-1	NA	4-Bromofluorobenzene (SS)	105	% Recovery	1	NA		02/21/01
X0163	XG.2001.240-1	NA	Dibromofluoromethane (SS)	103	% Recovery	1	NA		02/21/01
X0163	XG.2001.240-1	NA	Toluene-D8 (SS)	102	% Recovery	1	NA		02/21/01
X0163-008		**8260**							
X0163	XG.2001.240-8	NA	1,2 Dichloroethane-D4 (SS)	98	% Recovery	1	NA		02/22/01
X0163	XG.2001.240-8	NA	4-Bromofluorobenzene (SS)	102	% Recovery	1	NA		02/22/01
X0163	XG.2001.240-8	NA	Dibromofluoromethane (SS)	102	% Recovery	1	NA		02/22/01
X0163	XG.2001.240-8	NA	Toluene-D8 (SS)	100	% Recovery	1	NA		02/22/01
X0163-017		**8260**							
X0163	XG.2001.240-16	NA	1,2 Dichloroethane-D4 (SS)	85	% Recovery	1	NA		02/23/01
X0163	XG.2001.240-16	NA	4-Bromofluorobenzene (SS)	101	% Recovery	1	NA		02/23/01
X0163	XG.2001.240-16	NA	Dibromofluoromethane (SS)	96	% Recovery	1	NA		02/23/01
X0163	XG.2001.240-16	NA	Toluene-D8 (SS)	99	% Recovery	1	NA		02/23/01
X0163-034		**8260**							
X0163	XG.2001.240-26	NA	1,2 Dichloroethane-D4 (SS)	91	% Recovery	1	NA		02/26/01
X0163	XG.2001.240-26	NA	4-Bromofluorobenzene (SS)	98	% Recovery	1	NA		02/26/01
X0163	XG.2001.240-26	NA	Dibromofluoromethane (SS)	100	% Recovery	1	NA		02/26/01
3	XG.2001.240-26	NA	Toluene-D8 (SS)	102	% Recovery	1	NA		02/26/01

Surrogate Summary: QC

Client: **CH2MHILL**

Project: **0102196** **160660.02.FF.SA**

X0163-035		8260							
X0163	XG.2001.242-1	NA	1,2 Dichloroethane-D4 (SS)	92	% Recovery	1	NA		02/27/0
X0163	XG.2001.242-1	NA	4-Bromofluorobenzene (SS)	98	% Recovery	1	NA		02/27/0
X0163	XG.2001.242-1	NA	Dibromofluoromethane (SS)	101	% Recovery	1	NA		02/27/0
X0163	XG.2001.242-1	NA	Toluene-D8 (SS)	100	% Recovery	1	NA		02/27/0
X0167-001		8270							
X0167	XG.2001.223-1	NA	*2,4,6-TRIBROMOPHENOL	66	% Recovery	1	NA		02/22/0
X0167	XG.2001.223-1	NA	*2-FLUOROBIPHENYL	60	% Recovery	1	NA		02/22/0
X0167	XG.2001.223-1	NA	*2-FLUOROPHENOL	50	% Recovery	1	NA		02/22/0
X0167	XG.2001.223-1	NA	*NITROBENZENE-D5	58	% Recovery	1	NA		02/22/0
X0167	XG.2001.223-1	NA	*PHENOL-D6	58	% Recovery	1	NA		02/22/0
X0167	XG.2001.223-1	NA	*TERPHENYL-D14	62	% Recovery	1	NA		02/22/0
X0167-009		8270							
X0167	XG.2001.235-1	NA	*2,4,6-TRIBROMOPHENOL	93	% Recovery	1	NA		02/23/01
X0167	XG.2001.235-1	NA	*2-FLUOROBIPHENYL	81	% Recovery	1	NA		02/23/01
X0167	XG.2001.235-1	NA	*2-FLUOROPHENOL	69	% Recovery	1	NA		02/23/01
X0167	XG.2001.235-1	NA	*NITROBENZENE-D5	76	% Recovery	1	NA		02/23/01
X0167	XG.2001.235-1	NA	*PHENOL-D6	80	% Recovery	1	NA		02/23/01
X0167	XG.2001.235-1	NA	*TERPHENYL-D14	89	% Recovery	1	NA		02/23/01

QC Type **MS** QC Matrix **SOLID**

QC Group	Run Sequence	CAS #	Analyte	Result	Units	Dilution Factor	Detection Limit	Code	Run Date
X0148-005		DRO							
X0148	XG.2001.169-5	NA	O-terphenyl	107	% Recovery	1	NA		02/07/01
X0150-006		GRO							
X0150	XG.2001.174-6	NA	4-Bromofluorobenzene-FID	114	% Recovery	1	NA		02/07/01
X0150	XG.2001.174-6	NA	4-Bromofluorobenzene-PID	ND	% Recovery	1	NA		02/07/01
X0150	XG.2001.174-6	NA	aaa-Trifluorotoluene-FID	124	% Recovery	1	NA		02/07/01
X0150	XG.2001.174-6	NA	aaa-Trifluorotoluene-PID	ND	% Recovery	1	NA		02/07/01
X0158-006		BTEXALL							
X0158	XG.2001.210-6	NA	4-Bromofluorobenzene	104	% Recovery	1	NA		02/20/01
X0158	XG.2001.210-6	NA	aaa-Trifluorotoluene	104	% Recovery	1	NA		02/20/01
X0163-005		8260							
X0163	XG.2001.240-5	NA	1,2 Dichloroethane-D4 (SS)	113	% Recovery	1	NA		02/21/01
X0163	XG.2001.240-5	NA	4-Bromofluorobenzene (SS)	108	% Recovery	1	NA		02/21/01
X0163	XG.2001.240-5	NA	Dibromofluoromethane (SS)	103	% Recovery	1	NA		02/21/01
X0163	XG.2001.240-5	NA	Toluene-D8 (SS)	102	% Recovery	1	NA		02/21/01
X0167-005		8270							
X0167	XG.2001.223-5	NA	*2,4,6-TRIBROMOPHENOL	124	% Recovery	1	NA		02/22/0
X0167	XG.2001.223-5	NA	*2-FLUOROBIPHENYL	111	% Recovery	1	NA		02/22/0
X0167	XG.2001.223-5	NA	*2-FLUOROPHENOL	84	% Recovery	1	NA		02/22/0
X0167	XG.2001.223-5	NA	*NITROBENZENE-D5	98	% Recovery	1	NA		02/22/0
X0167	XG.2001.223-5	NA	*PHENOL-D6	96	% Recovery	1	NA		02/2

Surrogate Summary: QC

Client: CH2MHILL

ject: 0102196 160660.02.FF.SA

X0167	XG.2001.223-5	NA	*TERPHENYL-D14	107	% Recovery	1	NA		02/22/01

QC Type **MSD** QC Matrix **SOLID**

QC Group	Run Sequence	CAS #	Analyte	Result	Units	Dilution Factor	Detection Limit	Code	Run Date
X0148-006		**DRO**							
X0148	XG.2001.169-6	NA	O-terphenyl	108	% Recovery	1	NA		02/07/01
X0150-007		**GRO**							
X0150	XG.2001.174-7	NA	4-Bromofluorobenzene-FID	113	% Recovery	1	NA		02/07/01
X0150	XG.2001.174-7	NA	4-Bromofluorobenzene-PID	ND	% Recovery	1	NA		02/07/01
X0150	XG.2001.174-7	NA	aaa-Trifluorotoluene-FID	125	% Recovery	1	NA		02/07/01
X0150	XG.2001.174-7	NA	aaa-Trifluorotoluene-PID	ND	% Recovery	1	NA		02/07/01
X0158-007		**BTEXALL**							
X0158	XG.2001.210-7	NA	4-Bromofluorobenzene	103	% Recovery	1	NA		02/20/01
X0158	XG.2001.210-7	NA	aaa-Trifluorotoluene	104	% Recovery	1	NA		02/20/01
X0163-006		**8260**							
X0163	XG.2001.240-6	NA	1,2 Dichloroethane-D4 (SS)	114	% Recovery	1	NA		02/21/01
X0163	XG.2001.240-6	NA	4-Bromofluorobenzene (SS)	107	% Recovery	1	NA		02/21/01
X0163	XG.2001.240-6	NA	Dibromofluoromethane (SS)	103	% Recovery	1	NA		02/21/01
63	XG.2001.240-6	NA	Toluene-D8 (SS)	103	% Recovery	1	NA		02/21/01
X0167-006		**8270**							
X0167	XG.2001.223-6	NA	*2,4,6-TRIBROMOPHENOL	100	% Recovery	1	NA		02/22/01
X0167	XG.2001.223-6	NA	*2-FLUOROBIPHENYL	88	% Recovery	1	NA		02/22/01
X0167	XG.2001.223-6	NA	*2-FLUOROPHENOL	68	% Recovery	1	NA		02/22/01
X0167	XG.2001.223-6	NA	*NITROBENZENE-D5	80	% Recovery	1	NA		02/22/01
X0167	XG.2001.223-6	NA	*PHENOL-D6	79	% Recovery	1	NA		02/22/01
X0167	XG.2001.223-6	NA	*TERPHENYL-D14	87	% Recovery	1	NA		02/22/01

Assaigai Analytical Laboratories, Inc.

Surrogate Summary: Fraction

Client: **CH2MHILL**

Project: **0102196** **160660.02.FF.SA**

Client Sample ID **ST106 SB 28A 250'** Sample Matrix **SOIL**

QC Group	Run Sequence	CAS #	Analyte	Result	Units	Dilution Factor	Detection Limit	Code	Run Date
0102196-01A		GRO							**X0150-018**
X0150	XG.2001.214-5	NA	4-Bromofluorobenzene-FID	92	% Recovery	10	NA		02/21/01
X0150	XG.2001.214-5	NA	4-Bromofluorobenzene-PID	ND	% Recovery	10	NA		02/21/01
X0150	XG.2001.214-5	NA	aaa-Trifluorotoluene-FID	103	% Recovery	10	NA		02/21/01
X0150	XG.2001.214-5	NA	aaa-Trifluorotoluene-PID	ND	% Recovery	10	NA		02/21/01
0102196-01B		DRO							**X0148-018**
X0148	XG.2001.213-2	NA	O-terphenyl	87	% Recovery	1	NA		02/21/01

Client Sample ID **ST106 SB 28A 270'** Sample Matrix **SOIL**

QC Group	Run Sequence	CAS #	Analyte	Result	Units	Dilution Factor	Detection Limit	Code	Run Date
0102196-02A		GRO							**X0150-021**
X0150	XG.2001.214-6	NA	4-Bromofluorobenzene-FID	131	% Recovery	2000	NA		02/21/01
[illegible]	XG.2001.214-6	NA	4-Bromofluorobenzene-PID	1030	% Recovery	2000	NA		02/21/01
[illegible]	XG.2001.214-6	NA	aaa-Trifluorotoluene-FID	99	% Recovery	2000	NA		02/21/01
X0150	XG.2001.214-6	NA	aaa-Trifluorotoluene-PID	791	% Recovery	2000	NA		02/21/01
0102196-02B		DRO							**X0148-019**
X0148	XG.2001.213-6	NA	O-terphenyl	104	% Recovery	10	NA		02/21/01
0102196-02C		8260							**X0163-015**
X0163	XG.2001.240-14	NA	1,2 Dichloroethane-D4 (SS)	93	% Recovery	10	NA		02/22/01
X0163	XG.2001.240-14	NA	4-Bromofluorobenzene (SS)	103	% Recovery	10	NA		02/22/01
X0163	XG.2001.240-14	NA	Dibromofluoromethane (SS)	98	% Recovery	10	NA		02/22/01
X0163	XG.2001.240-14	NA	Toluene-D8 (SS)	102	% Recovery	10	NA		02/22/01
0102196-02D		8270							**X0167-007**
X0167	XG.2001.223-7	NA	*2,4,6-TRIBROMOPHENOL	97	% Recovery	1	NA		02/22/01
X0167	XG.2001.223-7	NA	*2-FLUOROBIPHENYL	89	% Recovery	1	NA		02/22/01
X0167	XG.2001.223-7	NA	*2-FLUOROPHENOL	75	% Recovery	1	NA		02/22/01
X0167	XG.2001.223-7	NA	*NITROBENZENE-D5	86	% Recovery	1	NA		02/22/01
X0167	XG.2001.223-7	NA	*PHENOL-D6	86	% Recovery	1	NA		02/22/01
X0167	XG.2001.223-7	NA	*TERPHENYL-D14	90	% Recovery	1	NA		02/22/01

Client Sample ID **ST106 SB 28A 320'** Sample Matrix **SOIL**

QC Group	Run Sequence	CAS #	Analyte	Result	Units	Dilution Factor	Detection Limit	Code	Run Date
[illegible]2196-03A		GRO							**X0150-016**
[illegible]0	XG.2001.214-3	NA	4-Bromofluorobenzene-FID	89	% Recovery	1	NA		02/21/01

Surrogate Summary: Fraction

Client: **CH2MHILL**

Project: **0102196** **160660.02.FF.SA**

X0150	XG.2001.214-3	NA	4-Bromofluorobenzene-PID	180	% Recovery	1	NA		02/21/01
X0150	XG.2001.214-3	NA	aaa-Trifluorotoluene-FID	103	% Recovery	1	NA		02/21/01
X0150	XG.2001.214-3	NA	aaa-Trifluorotoluene-PID	19	% Recovery	1	NA		02/21/01
0102196-03B		**DRO**							**X0148-020**
X0148	XG.2001.213-3	NA	O-terphenyl	93	% Recovery	1	NA		02/21/01
0102196-03C		**8260**							**X0163-004**
X0163	XG.2001.240-4	NA	1,2 Dichloroethane-D4 (SS)	113	% Recovery	1	NA		02/21/01
X0163	XG.2001.240-4	NA	4-Bromofluorobenzene (SS)	106	% Recovery	1	NA		02/21/01
X0163	XG.2001.240-4	NA	Dibromofluoromethane (SS)	104	% Recovery	1	NA		02/21/01
X0163	XG.2001.240-4	NA	Toluene-D8 (SS)	103	% Recovery	1	NA		02/21/01
0102196-03C		**8260**							**X0163-007**
X0163	XG.2001.240-7	NA	1,2 Dichloroethane-D4 (SS)	115	% Recovery	1	NA		02/21/01
X0163	XG.2001.240-7	NA	4-Bromofluorobenzene (SS)	105	% Recovery	1	NA		02/21/01
X0163	XG.2001.240-7	NA	Dibromofluoromethane (SS)	105	% Recovery	1	NA		02/21/01
X0163	XG.2001.240-7	NA	Toluene-D8 (SS)	104	% Recovery	1	NA		02/21/01
0102196-03D		**8270**							**X0167-004**
X0167	XG.2001.223-4	NA	*2,4,6-TRIBROMOPHENOL	100	% Recovery	1	NA		02/22/01
X0167	XG.2001.223-4	NA	*2-FLUOROBIPHENYL	90	% Recovery	1	NA		02/22/01
X0167	XG.2001.223-4	NA	*2-FLUOROPHENOL	68	% Recovery	1	NA		02/22/01
X0167	XG.2001.223-4	NA	*NITROBENZENE-D5	79	% Recovery	1	NA		02/22/01
X0167	XG.2001.223-4	NA	*PHENOL-D6	78	% Recovery	1	NA		02/22/01
X0167	XG.2001.223-4	NA	*TERPHENYL-D14	88	% Recovery	1	NA		02/22/01

Client Sample ID **ST106 SB 28A 330'** Sample Matrix **SOIL**

QC Group	Run Sequence	CAS #	Analyte	Result	Units	Dilution Factor	Detection Limit	Code	Run Date
0102196-04A		**GRO**							**X0150-017**
X0150	XG.2001.214-4	NA	4-Bromofluorobenzene-FID	92	% Recovery	1	NA		02/21/01
X0150	XG.2001.214-4	NA	4-Bromofluorobenzene-PID	ND	% Recovery	1	NA		02/21/01
X0150	XG.2001.214-4	NA	aaa-Trifluorotoluene-FID	107	% Recovery	1	NA		02/21/01
X0150	XG.2001.214-4	NA	aaa-Trifluorotoluene-PID	ND	% Recovery	1	NA		02/21/01
0102196-04B		**DRO**							**X0148-021**
X0148	XG.2001.213-4	NA	O-terphenyl	88	% Recovery	1	NA		02/21/01
0102196-04C		**BTEXALL**							**X0158-034**
X0158	XG.2001.255-2	NA	4-Bromofluorobenzene	96	% Recovery	1	NA		03/01/01
X0158	XG.2001.255-2	NA	aaa-Trifluorotoluene	100	% Recovery	1	NA		03/01/01

ASSAIGAI CH2M8
ANALYTICAL 3/6/01
LABORATORIES, INC. G-7F2163R

Chain of Custody Record

7300 JEFFERSON N.E.
ALBUQUERQUE, NEW MEXICO 87109
(505) 345-8964

3332 WEDGEWOOD
EL PASO, TEXAS 79925
(915) 593-6000

127 EASTGATE DRIVE, 212-C
LOS ALAMOS, NEW MEXICO 87544
(505) 662-2558

Lab job No. 0102196 Date 2-20-01

Page 1 of 1

Client CH2M HILL / ABQ
Address 6001 INDIAN SCHOOL Rd
City / State / Zip ALBQ NM 87110
Project Name / Number KAFB / TO10
Contract / Purchase Order / Quote

Project Manager / Contact HALLORAN / LEFEVRE
Telephone No. 884-5600
Fax No. 883-7507
Samplers : (signature) [signature]

Analysis Required

AAL Fraction Number	Field Sample Number / Location	Date	Time	Sample Type	Type / Size of Container	Preservation Temp.	Preservation Chemical	No. of Containers	GRO	DRO	BTEX	VOC	SVOC						Remarks
1A,B	ST106 SB28A 250'	2-19	1215	SOIL	4oz	ICE	—	2	X	X									
2A,B,C,D	ST106 SB28A 270'	2-19	1330	SOIL	4oz	ICE	—	4	X	X		X	X						
3A,B,C,D	ST106 SB28A 320'	2-20	0905	SOIL	4oz	ICE	—	4	X	X		X	X						
4A,B,C,D	ST106 SB28A 330'	2-20	1030	SOIL	4oz	ICE	—	3	X	X	X								

WM LEFEVRE

Relinquished by:	Date	Received by:	Relinquished by:	Date	Received by:
Signature [signature]	2-20-01	Signature [signature]	Signature		Signature
Printed WM J LEFEVRE	Time 11:01	Printed [signature]	Printed	Time	Printed
Company CH2M HILL		Company [signature]	Company		Company
Reason XFR TO LAB courier		Reason courier	Reason		Reason

Method of Shipment:
Shipment No.
Special Instructions:

Comments: 24 HR on DRO/ERO

After analysis, samples are to be:
- ❑ Disposed of (additional fee)
- ❑ Stored (30 days max)
- ❑ Stored over 30 days (additional fee)
- ❑ Returned to customer

RECEIVED MAR 07 2001

COURIER

ASSAIGAI
ANALYTICAL
LABORATORIES, INC.
7300 Jefferson, NE • Albuquerque, New Mexico 87109 • (505) 345-8964 • FAX (505) 345-7259
3332 Wedgewood Dr., Suite N • El Paso, Texas 79925 • (915) 593-6000 • FAX (915) 593-7820
127 Eastgate Drive, 212-C • Los Alamos, New Mexico 87544 • (505) 662-2558

RECEIVED FEB 26 2001

Explanation of codes

B	*analyte detected in Method Blank*
E	*result is estimated*
H	*analyzed out of hold time*
N	*tentatively identified compound*
S	*subcontracted*
1-9	*see footnote*

CH2MHILL
attn: **AMY HALLORAN**
6001 INDIAN SCHOOL RD NE STE 350
ALBUQUERQUE, NM 87110-4140

Assaigai Analytical Laboratories, Inc.

Certificate of Analysis

Client: **CH2MHILL**
Project: **0102198** **160660.02.FF.SA**

William P. Biava: President of Assaigai Analytical Laboratories, Inc.

Client Sample ID ***ST106 SB 28A 340'*** Sample Matrix ***SOIL*** Sample Collected ***02/20/01 12:35:00***

QC Group	Run Sequence	CAS #	Analyte	Result	Units	Dilution Factor	Detection Limit	Code	Run Date
0102198-01A		**SW846 5030A/8015A GRO by GC/FID**							
X0150	XG.2001.214-2		Gasoline Range Organics	ND	mg / Kg	1	0.25		02/21/0
0102198-01B		**SW846 ME/8015A Diesel Range Organics by GC/FID**							
X0148	XG.2001.213-5		Diesel Range Organics	ND	mg / Kg	1	25		02/21/0

**** Sample specific Detection Limit is determined by multiplying the sample Dilution Factor by the listed Reporting Detection Limit. ****
**** ND = Not detected: less than the sample specific Detection Limit. Results relate only to the items tested. ****

Member:
American Council of
Independent Laboratories, Inc.

REPRODUCTION OF THIS REPORT IN LESS THAN FULL REQUIRES THE WRITTEN CONSENT OF AAL.
THIS REPORT MAY NOT BE USED IN ANY MANNER BY THE CLIENT OR ANY OTHER THIRD PARTY TO CLAIM
PRODUCT ENDORSEMENT BY ANY ACCREDITATION PROGRAM.

RECEIVED FEB 2 0 2001

Assaigai Analytical Laboratories, Inc.

Quality Control Summary

Client: CH2MHILL

ct: 0102198 160660.02.FF.SA

Explanation of codes

D	*Not applicable due to sample dilution*
L	*Not applicable due to MDL proximity*

QC Type **LCS: Lab Control Spike** QC Matrix **SOLID**

QC Group	Run Sequence	CAS #	Analyte	Result	Units	Dilution Factor	Detection Limit	Code	Run Date
X0148-002		**SW846 ME/8015A Diesel Range Organics by GC/FID**							
X0148	XG.2001.169-2		Diesel Range Organics	90	% Recovery	1	NA		02/07/01

QC Type **LCSD: Lab Control Spike Duplicate Accuracy** QC Matrix **SOLID**

QC Group	Run Sequence	CAS #	Analyte	Result	Units	Dilution Factor	Detection Limit	Code	Run Date
X0148-003		**SW846 ME/8015A Diesel Range Organics by GC/FID**							
X0148	XG.2001.169-3		Diesel Range Organics	91	% Recovery	1	NA		02/07/01
X0150-003		**SW846 5030A/8015A GRO by GC/FID**							
X0150	XG.2001.174-3		Gasoline Range Organics	92	% Recovery	1	NA		02/07/01

QC Type **LCSD: Lab Control Spike Duplicate Precision** QC Matrix **SOLID**

Group	Run Sequence	CAS #	Analyte	Result	Units	Dilution Factor	Detection Limit	Code	Run Date
X0148-003		**SW846 ME/8015A Diesel Range Organics by GC/FID**							
X0148	XG.2001.169-3		Diesel Range Organics	1	RPD	1	NA		02/07/01
X0150-003		**SW846 5030A/8015A GRO by GC/FID**							
X0150	XG.2001.174-3		Gasoline Range Organics	7	RPD	1	NA		02/07/01

QC Type **MB: Method Blank** QC Matrix **SOLID**

QC Group	Run Sequence	CAS #	Analyte	Result	Units	Dilution Factor	Detection Limit	Code	Run Date
X0148-001		**SW846 ME/8015A Diesel Range Organics by GC/FID**							
X0148	XG.2001.169-1		Diesel Range Organics	ND	mg / Kg	1	25		02/07/01
X0148-008		**SW846 ME/8015A Diesel Range Organics by GC/FID**							
X0148	XG.2001.175-1		Diesel Range Organics	ND	mg / Kg	1	25		02/08/01
X0148-011		**SW846 ME/8015A Diesel Range Organics by GC/FID**							
X0148	XG.2001.182-1		Diesel Range Organics	ND	mg / Kg	1	25		02/09/01
X0148-013		**SW846 ME/8015A Diesel Range Organics by GC/FID**							
X0148	XG.2001.194-1		Diesel Range Organics	ND	mg / Kg	1	25		02/14/01
X0148-017		**SW846 ME/8015A Diesel Range Organics by GC/FID**							
X0148	XG.2001.213-1		Diesel Range Organics	ND	mg / Kg	1	25		02/21/01

Quality Control Summary

Client: **CH2MHILL**

Project: **0102198** **160660.02.FF.SA**

Explanation of codes

D	*Not applicable due to sample diluti*
L	*Not applicable due to MDL proxim*

X0150-001		**SW846 5030A/8015A GRO by GC/FID**							
X0150	XG.2001.174-1		Gasoline Range Organics	ND	mg / Kg	1	0.25		02/07/01
X0150-008		**SW846 5030A/8015A GRO by GC/FID**							
X0150	XG.2001.183-1		Gasoline Range Organics	ND	mg / Kg	1	0.25		02/09/01
X0150-010		**SW846 5030A/8015A GRO by GC/FID**							
X0150	XG.2001.192-1		Gasoline Range Organics	ND	mg / Kg	1	0.25		02/13/01
X0150-014		**SW846 5030A/8015A GRO by GC/FID**							
X0150	XG.2001.214-1		Gasoline Range Organics	ND	mg / Kg	1	0.25		02/21/01

QC Type **MS: Matrix Spike** QC Matrix **SOLID**

QC Group	Run Sequence	CAS #	Analyte	Result	Units	Dilution Factor	Detection Limit	Code	Run Date
X0148-005		**SW846 ME/8015A Diesel Range Organics by GC/FID**							
X0148	XG.2001.169-5		Diesel Range Organics	99	% Recovery	1	NA		02/07/01
X0150-006		**SW846 5030A/8015A GRO by GC/FID**							
X0150	XG.2001.174-6		Gasoline Range Organics	94	% Recovery	1	NA		02/07/01

QC Type **MSD: Matrix Spike Duplicate Accuracy** QC Matrix **SOLID**

QC Group	Run Sequence	CAS #	Analyte	Result	Units	Dilution Factor	Detection Limit	Code	Run Date
X0148-006		**SW846 ME/8015A Diesel Range Organics by GC/FID**							
X0148	XG.2001.169-6		Diesel Range Organics	96	% Recovery	1	NA		02/07/01
X0150-007		**SW846 5030A/8015A GRO by GC/FID**							
X0150	XG.2001.174-7		Gasoline Range Organics	92	% Recovery	1	NA		02/07/01

QC Type **MSD: Matrix Spike Duplicate Precision** QC Matrix **SOLID**

QC Group	Run Sequence	CAS #	Analyte	Result	Units	Dilution Factor	Detection Limit	Code	Run Date
X0148-006		**SW846 ME/8015A Diesel Range Organics by GC/FID**							
X0148	XG.2001.169-6		Diesel Range Organics	3	RPD	1	NA		02/07/01
X0150-007		**SW846 5030A/8015A GRO by GC/FID**							
X0150	XG.2001.174-7		Gasoline Range Organics	3	RPD	1	NA		02/07/01

Surrogate Summary: QC

Client: **CH2MHILL**

Project: **0102198** **160660.02.FF.SA**

QC Type **LCS** QC Matrix **SOLID**

QC Group	Run Sequence	CAS #	Analyte	Result	Units	Dilution Factor	Detection Limit	Code	Run Date
X0148-002		DRO							
X0148	XG.2001.169-2	NA	O-terphenyl	102	% Recovery	1	NA		02/07/01

QC Type **LCSD** QC Matrix **SOLID**

QC Group	Run Sequence	CAS #	Analyte	Result	Units	Dilution Factor	Detection Limit	Code	Run Date
X0148-003		DRO							
X0148	XG.2001.169-3	NA	O-terphenyl	104	% Recovery	1	NA		02/07/01
X0150-003		GRO							
X0150	XG.2001.174-3	NA	4-Bromofluorobenzene-FID	100	% Recovery	1	NA		02/07/01
X0150	XG.2001.174-3	NA	4-Bromofluorobenzene-PID	ND	% Recovery	1	NA		02/07/01
X0150	XG.2001.174-3	NA	aaa-Trifluorotoluene-FID	107	% Recovery	1	NA		02/07/01
X0150	XG.2001.174-3	NA	aaa-Trifluorotoluene-PID	ND	% Recovery	1	NA		02/07/01

QC Type **MB** QC Matrix **SOLID**

QC Group	Run Sequence	CAS #	Analyte	Result	Units	Dilution Factor	Detection Limit	Code	Run Date
X0148-001		DRO							
X0148	XG.2001.169-1	NA	O-terphenyl	92	% Recovery	1	NA		02/07/01
X0148-008		DRO							
X0148	XG.2001.175-1	NA	O-terphenyl	92	% Recovery	1	NA		02/08/01
X0148-011		DRO							
X0148	XG.2001.182-1	NA	O-terphenyl	90	% Recovery	1	NA		02/09/01
X0148-013		DRO							
X0148	XG.2001.194-1	NA	O-terphenyl	87	% Recovery	1	NA		02/14/01
X0148-017		DRO							
X0148	XG.2001.213-1	NA	O-terphenyl	88	% Recovery	1	NA		02/21/01
X0150-001		GRO							
X0150	XG.2001.174-1	NA	4-Bromofluorobenzene-FID	87	% Recovery	1	NA		02/07/01
X0150	XG.2001.174-1	NA	4-Bromofluorobenzene-PID	ND	% Recovery	1	NA		02/07/01
X0150	XG.2001.174-1	NA	aaa-Trifluorotoluene-FID	102	% Recovery	1	NA		02/07/01
X0150	XG.2001.174-1	NA	aaa-Trifluorotoluene-PID	ND	% Recovery	1	NA		02/07/01
X0150-008		GRO							
[illegible]	XG.2001.183-1	NA	4-Bromofluorobenzene-FID	87	% Recovery	1	NA		02/09/01
[illegible]	XG.2001.183-1	NA	4-Bromofluorobenzene-PID	ND	% Recovery	1	NA		02/09/01

Surrogate Summary: QC

Client: **CH2MHILL**

Project: **0102198** **160660.02.FF.SA**

X0150	XG.2001.183-1	NA	aaa-Trifluorotoluene-FID	105	% Recovery	1	NA		02/09/01
X0150	XG.2001.183-1	NA	aaa-Trifluorotoluene-PID	ND	% Recovery	1	NA		02/09/01
X0150-010		GRO							
X0150	XG.2001.192-1	NA	4-Bromofluorobenzene-FID	90	% Recovery	1	NA		02/13/01
X0150	XG.2001.192-1	NA	4-Bromofluorobenzene-PID	ND	% Recovery	1	NA		02/13/01
X0150	XG.2001.192-1	NA	aaa-Trifluorotoluene-FID	105	% Recovery	1	NA		02/13/01
X0150	XG.2001.192-1	NA	aaa-Trifluorotoluene-PID	ND	% Recovery	1	NA		02/13/01
X0150-014		GRO							
X0150	XG.2001.214-1	NA	4-Bromofluorobenzene-FID	88	% Recovery	1	NA		02/21/01
X0150	XG.2001.214-1	NA	4-Bromofluorobenzene-PID	28	% Recovery	1	NA		02/21/01
X0150	XG.2001.214-1	NA	aaa-Trifluorotoluene-FID	102	% Recovery	1	NA		02/21/01
X0150	XG.2001.214-1	NA	aaa-Trifluorotoluene-PID	17	% Recovery	1	NA		02/21/01

QC Type **MS** QC Matrix **SOLID**

QC Group	Run Sequence	CAS #	Analyte	Result	Units	Dilution Factor	Detection Limit	Code	Run Date
X0148-005		DRO							
X0148	XG.2001.169-5	NA	O-terphenyl	107	% Recovery	1	NA		02/07/01
X0150-006		GRO							
X0150	XG.2001.174-6	NA	4-Bromofluorobenzene-FID	114	% Recovery	1	NA		02/0
X0150	XG.2001.174-6	NA	4-Bromofluorobenzene-PID	ND	% Recovery	1	NA		02/07/
X0150	XG.2001.174-6	NA	aaa-Trifluorotoluene-FID	124	% Recovery	1	NA		02/07/01
X0150	XG.2001.174-6	NA	aaa-Trifluorotoluene-PID	ND	% Recovery	1	NA		02/07/01

QC Type **MSD** QC Matrix **SOLID**

QC Group	Run Sequence	CAS #	Analyte	Result	Units	Dilution Factor	Detection Limit	Code	Run Date
X0148-006		DRO							
X0148	XG.2001.169-6	NA	O-terphenyl	108	% Recovery	1	NA		02/07/01
X0150-007		GRO							
X0150	XG.2001.174-7	NA	4-Bromofluorobenzene-FID	113	% Recovery	1	NA		02/07/01
X0150	XG.2001.174-7	NA	4-Bromofluorobenzene-PID	ND	% Recovery	1	NA		02/07/01
X0150	XG.2001.174-7	NA	aaa-Trifluorotoluene-FID	125	% Recovery	1	NA		02/07/01
X0150	XG.2001.174-7	NA	aaa-Trifluorotoluene-PID	ND	% Recovery	1	NA		02/07/01

Assaigai Analytical Laboratories, Inc.

Surrogate Summary: Fraction

Client: **CH2MHILL**

ect: **0102198** **160660.02.FF.SA**

Client Sample ID **ST106 SB 28A 340'** Sample Matrix **SOIL**

QC Group	Run Sequence	CAS #	Analyte	Result	Units	Dilution Factor	Detection Limit	Code	Run Date
0102198-01A		**GRO**							**X0150-015**
X0150	XG.2001.214-2	NA	4-Bromofluorobenzene-FID	89	% Recovery	1	NA		02/21/01
X0150	XG.2001.214-2	NA	4-Bromofluorobenzene-PID	179	% Recovery	1	NA		02/21/01
X0150	XG.2001.214-2	NA	aaa-Trifluorotoluene-FID	102	% Recovery	1	NA		02/21/01
X0150	XG.2001.214-2	NA	aaa-Trifluorotoluene-PID	336	% Recovery	1	NA		02/21/01
0102198-01B		**DRO**							**X0148-022**
X0148	XG.2001.213-5	NA	O-terphenyl	90	% Recovery	1	NA		02/21/01

ASSAIGAI ANALYTICAL LABORATORIES, INC.

CH2M 8 2/21/01 FRI 3R G-7

Chain of Custody Record

7300 JEFFERSON N.E.
ALBUQUERQUE, NEW MEXICO 87109
(505) 345-8964

3332 WEDGEWOOD
EL PASO, TEXAS 79925
(915) 593-6000

127 EASTGATE DRIVE, 212-C
LOS ALAMOS, NEW MEXICO 87544
(505) 662-2558

RECEIVED FEB 26 2001

Lab job No.: 010298 Date: 2-20-01

Page 1 of 1

Client: CH2M HILL/ABQ

Address: 6001 INDIAN SCHOOL RD

City / State / Zip: ABQ NM 87110

Project Name / Number: TO 10 KAIB

Contract / Purchase Order / Quote:

Project Manager / Contact: HALLERAN / LEFEVRE

Telephone No.: 884 5600

Fax No.: 883 7507

Samplers: (signature): [signature]

Analysis Required

AAL Fraction Number	Field Sample Number / Location	Date	Time	Sample Type	Type / Size of Container	Preservation Temp.	Preservation Chemical	No. of Containers	GRO	DRO									Remarks
11,12	ST 106 SB23A 340'	2-20	1235	Soil	4oz	1C	—	2	X	X									

Relinquished by:
Signature: [signature]
Printed: LARRY J LEFEVRE
Company: CH2M HILL
Reason: PROJECT LAB

Date: 2-20
Time: 13:00

Received by:
Signature: [signature]
Printed: [illegible]
Company: [illegible]
Reason: [illegible]

Relinquished by:
Signature:
Printed:
Company:
Reason:

Date:
Time:

Received by:
Signature:
Printed:
Company:
Reason:

Method of Shipment:
Shipment No.:
Special Instructions:

Comments: 24 HR TAT

After analysis, samples are to be:
- ☐ Disposed of (additional fee)
- ☐ Stored (30 days max)
- ☐ Stored over 30 days (additional fee)
- ☐ Returned to customer

CC R

ASSAIGAI
ANALYTICAL
LABORATORIES, INC.
7300 Jefferson, NE • Albuquerque, New Mexico 87109 • (505) 345-8964 • FAX (505) 345-7259
3332 Wedgewood Dr., Suite N • El Paso, Texas 79925 • (915) 593-6000 • FAX (915) 593-7820
127 Eastgate Drive, 212-C • Los Alamos, New Mexico 87544 • (505) 662-255

Explanation of codes

B	*analyte detected in Method Blank*
E	*result is estimated*
H	*analyzed out of hold time*
N	*tentatively identified compound*
S	*subcontracted*
1-9	*see footnote*

CH2MHILL
attn: **AMY HALLORAN**
6001 INDIAN SCHOOL RD NE STE 350
ALBUQUERQUE, NM 87110-4140

Assaigai Analytical Laboratories, Inc.

Certificate of Analysis

Client: **CH2MHILL**
Project: **0011230** **KAFB 160600**

William P. Biava: President of Assaigai Analytical Laboratories, Inc.

Client Sample ID ***SB-29-90'*** Sample Matrix ***SOIL*** Sample Collected ***11/28/00 08:00:00***

QC Group	Run Sequence	CAS #	Analyte	Result	Units	Dilution Factor	Detection Limit	Code	Run Date
0011230-01A		**SW846 5030A/8015A GRO by GC/FID**							
X00443	XG.2000.1305-2		Gasoline Range Organics	ND	mg / Kg	1	0.25		11/28/00
0011230-01B		**SW846 ME/8015A Diesel Range Organics by GC/FID**							
X00441	XG.2000.1306-2		Diesel Range Organics	ND	mg / Kg	1	25		11/28/00

Client Sample ID ***SB-29-100'*** Sample Matrix ***SOIL*** Sample Collected ***11/28/00 08:50:00***

QC Group	Run Sequence	CAS #	Analyte	Result	Units	Dilution Factor	Detection Limit	Code	Run Date
0011230-02A		**SW846 5030A/8015A GRO by GC/FID**							
X00443	XG.2000.1305-3		Gasoline Range Organics	ND	mg / Kg	1	0.25		11/28/00
0011230-02B		**SW846 ME/8015A Diesel Range Organics by GC/FID**							
X00441	XG.2000.1306-3		Diesel Range Organics	ND	mg / Kg	1	25		11/28/00

Member
American Council of
Independent Laboratories, Inc.

REPRODUCTION OF THIS REPORT IN LESS THAN FULL REQUIRES THE WRITTEN CONSENT OF AAL
THIS REPORT MAY NOT BE USED IN ANY MANNER BY THE CLIENT OR ANY OTHER THIRD PARTY TO CLAIM
PRODUCT ENDORSEMENT BY ANY ACCREDITATION PROGRAM

Assaigai Analytical Laboratories, Inc.

Certificate of Analysis

Client: **CH2MHILL**

Project: **0011230** **KAFB 160600**

Client Sample ID: ***SB-29-110'*** Sample Matrix: ***SOIL*** Sample Collected: *11/28/00 09:20:00*

QC Group	Run Sequence	CAS #	Analyte	Result	Units	Dilution Factor	Detection Limit	Code	Run Date
0011230-03A		**SW846 5030A/8015A GRO by GC/FID**							
X00443	XG.2000.1305-4		Gasoline Range Organics	ND	mg / Kg	1	0.25		11/29/00
0011230-03B		**SW846 ME/8015A Diesel Range Organics by GC/FID**							
X00441	XG.2000.1306-4		Diesel Range Organics	ND	mg / Kg	1	25		11/29/00
0011230-03C		**SW846 8260A Purgeable VOCs by GC/MS**							
X00454	XG.2000.1313-9	75-34-3	1,1 Dichloroethane	ND	mg / Kg	1	0.005		11/29/00
X00454	XG.2000.1313-9	75-34-3	1,1 Dichloroethene	ND	mg / Kg	1	0.005		11/29/00
X00454	XG.2000.1313-9	71-55-6	1,1,1 Trichloroethane	ND	mg / Kg	1	0.005		11/29/00
X00454	XG.2000.1313-9	630-20-6	1,1,1,2 Tetrachloroethane	ND	mg / Kg	1	0.005		11/29/00
X00454	XG.2000.1313-9	79-00-5	1,1,2 Trichloroethane	ND	mg / Kg	1	0.005		11/29/00
X00454	XG.2000.1313-9	79-34-5	1,1,2,2 Tetrachloroethane	ND	mg / Kg	1	0.005		11/29/00
X00454	XG.2000.1313-9	106-93-4	1,2 Dibromoethane (EDB)	ND	mg / Kg	1	0.005		11/29/00
X00454	XG.2000.1313-9	95-50-1	1,2 Dichlorobenzene	ND	mg / Kg	1	0.005		11/29/00
X00454	XG.2000.1313-9	107-06-2	1,2 Dichloroethane	ND	mg / Kg	1	0.005		11/29/00
X00454	XG.2000.1313-9	78-87-5	1,2 Dichloropropane	ND	mg / Kg	1	0.005		11/2[illegible]
X00454	XG.2000.1313-9	96-18-4	1,2,3 Trichloropropane	ND	mg / Kg	1	0.005		11/29[illegible]
X00454	XG.2000.1313-9	95-63-6	1,2,4-Trimethylbenzene	ND	mg / Kg	1	0.005		11/29/00
X00454	XG.2000.1313-9	541-73-1	1,3 Dichlorobenzene	ND	mg / Kg	1	0.005		11/29/00
X00454	XG.2000.1313-9	108-67-8	1,3,5-Trimethylbenzene	ND	mg / Kg	1	0.005		11/29/00
X00454	XG.2000.1313-9	764-41-0	1,4 Dichloro-2-butene	ND	mg / Kg	1	0.05		11/29/00
X00454	XG.2000.1313-9	106-46-7	1,4 Dichlorobenzene	ND	mg / Kg	1	0.005		11/29/00
X00454	XG.2000.1313-9	78-93-3	2-Butanone (MEK)	0.030	mg / Kg	1	0.025		11/29/00
X00454	XG.2000.1313-9	110-75-8	2-Chloroethylvinylether	ND	mg / Kg	1	0.025		11/29/00
X00454	XG.2000.1313-9	591-78-6	2-Hexanone (MBK)	ND	mg / Kg	1	0.025		11/29/00
X00454	XG.2000.1313-9	108-10-1	4-Methyl-2-pentanone (MIBK)	ND	mg / Kg	1	0.025		11/29/00
X00454	XG.2000.1313-9	67-64-1	Acetone	0.34	mg / Kg	1	0.05		11/29/00
X00454	XG.2000.1313-9	107-02-8	Acrolein	ND	mg / Kg	1	0.1		11/29/00
X00454	XG.2000.1313-9	107-13-1	Acrylonitrile	ND	mg / Kg	1	0.1		11/29/00
X00454	XG.2000.1313-9	71-43-2	Benzene	ND	mg / Kg	1	0.005		11/29/00
X00454	XG.2000.1313-9	75-27-4	Bromodichloromethane	ND	mg / Kg	1	0.005		11/29/00
X00454	XG.2000.1313-9	75-25-2	Bromoform	ND	mg / Kg	1	0.005		11/29/00
X00454	XG.2000.1313-9	74-83-9	Bromomethane	ND	mg / Kg	1	0.025		11/29/00
X00454	XG.2000.1313-9	75-15-0	Carbon disulfide	ND	mg / Kg	1	0.025		11/29/00
X00454	XG.2000.1313-9	56-23-5	Carbon tetrachloride	ND	mg / Kg	1	0.005		11/29/00
X00454	XG.2000.1313-9	108-90-7	Chlorobenzene	ND	mg / Kg	1	0.005		11/29/00
X00454	XG.2000.1313-9	124-48-1	Chlorodibromomethane	ND	mg / Kg	1	0.005		11/29/00
X00454	XG.2000.1313-9	75-00-3	Chloroethane	ND	mg / Kg	1	0.025		11/29/00
X00454	XG.2000.1313-9	67-66-3	Chloroform	ND	mg / Kg	1	0.005		11/29/00
X00454	XG.2000.1313-9	74-87-3	Chloromethane	ND	mg / Kg	1	0.025		11/29/00
X00454	XG.2000.1313-9	156-59-2	cis-1,2 dichloroethene	ND	mg / Kg	1	0.005		11/29/[illegible]
X00454	XG.2000.1313-9	10061-01-5	cis-1,3 dichloropropene	ND	mg / Kg	1	0.005		11/[illegible]

Certificate of Analysis

t: **CH2MHILL**
Project: **0011230** **KAFB 160600**

X00454	XG.2000.1313-9	74-95-3	Dibromomethane	ND	mg / Kg	1	0.005	11/29/00
X00454	XG.2000.1313-9	97-63-2	Ethyl methacrylate	ND	mg / Kg	1	0.025	11/29/00
X00454	XG.2000.1313-9	100-41-4	Ethylbenzene	ND	mg / Kg	1	0.005	11/29/00
X00454	XG.2000.1313-9		Freon 113	ND	mg / Kg	1	0.025	11/29/00
X00454	XG.2000.1313-9	75-71-8	Freon 12	ND	mg / Kg	1	0.05	11/29/00
X00454	XG.2000.1313-9	74-88-4	Iodomethane	ND	mg / Kg	1	0.025	11/29/00
X00454	XG.2000.1313-9	1634-04-4	Methyl t-butyl ether (MTBE)	ND	mg / Kg	1	0.005	11/29/00
X00454	XG.2000.1313-9	75-09-2	Methylene chloride	ND	mg / Kg	1	0.05	11/29/00
X00454	XG.2000.1313-9	91-20-3	Naphthalene	ND	mg / Kg	1	0.025	11/29/00
X00454	XG.2000.1313-9	95-47-6	o-Xylene	ND	mg / Kg	1	0.005	11/29/00
X00454	XG.2000.1313-9	108-38-3/106-42	p/m Xylenes	ND	mg / Kg	1	0.01	11/29/00
X00454	XG.2000.1313-9	100-42-5	Styrene	ND	mg / Kg	1	0.005	11/29/00
X00454	XG.2000.1313-9	156-60-5	t-1,2 Dichloroethene	ND	mg / Kg	1	0.005	11/29/00
X00454	XG.2000.1313-9	10061-02-6	t-1,3 Dichloropropene	ND	mg / Kg	1	0.005	11/29/00
X00454	XG.2000.1313-9	127-18-4	Tetrachloroethene	ND	mg / Kg	1	0.005	11/29/00
X00454	XG.2000.1313-9	108-88-3	Toluene	ND	mg / Kg	1	0.005	11/29/00
X00454	XG.2000.1313-9	79-01-6	Trichloroethene	ND	mg / Kg	1	0.005	11/29/00
X00454	XG.2000.1313-9	75-69-4	Trichlorofluoromethane	ND	mg / Kg	1	0.025	11/29/00
X00454	XG.2000.1313-9	108-05-4	Vinyl acetate	ND	mg / Kg	1	0.025	11/29/00
X00454	XG.2000.1313-9	75-01-4	Vinyl chloride	ND	mg / Kg	1	0.025	11/29/00

0011230-03D **SW846 3550A/8270B SVOCs by GC/MS**

0	XG.2000.1331-2	120-82-1	1,2,4-Trichlorobenzene	ND	mg / Kg	1	0.03	12/01/00
X00450	XG.2000.1331-2	95-50-1	1,2-Dichlorobenzene	ND	mg / Kg	1	0.03	12/01/00
X00450	XG.2000.1331-2	541-73-1	1,3-Dichlorobenzene	ND	mg / Kg	1	0.03	12/01/00
X00450	XG.2000.1331-2	106-46-7	1,4-Dichlorobenzene	ND	mg / Kg	1	0.03	12/01/00
X00450	XG.2000.1331-2	90-12-0	1-Methylnaphthalene	ND	mg / Kg	1	0.03	12/01/00
X00450	XG.2000.1331-2	58-90-2	2,3,4,6-Tetrachlorophenol	ND	mg / Kg	1	1.5	12/01/00
X00450	XG.2000.1331-2	95-95-4	2,4,5-Trichlorophenol	ND	mg / Kg	1	0.3	12/01/00
X00450	XG.2000.1331-2	88-06-2	2,4,6-Trichlorophenol	ND	mg / Kg	1	0.3	12/01/00
X00450	XG.2000.1331-2	120-83-2	2,4-Dichlorophenol	ND	mg / Kg	1	0.3	12/01/00
X00450	XG.2000.1331-2	105-67-9	2,4-Dimethylphenol	ND	mg / Kg	1	0.03	12/01/00
X00450	XG.2000.1331-2	51-28-5	2,4-Dinitrophenol	ND	mg / Kg	1	0.67	12/01/00
X00450	XG.2000.1331-2	121-14-2	2,4-Dinitrotoluene	ND	mg / Kg	1	0.3	12/01/00
X00450	XG.2000.1331-2	606-20-2	2,6-Dinitrotoluene	ND	mg / Kg	1	0.3	12/01/00
X00450	XG.2000.1331-2	91-58-7	2-Chloronaphthalene	ND	mg / Kg	1	0.03	12/01/00
X00450	XG.2000.1331-2	95-57-8	2-Chlorophenol	ND	mg / Kg	1	0.03	12/01/00
X00450	XG.2000.1331-2	91-57-6	2-Methylnaphthalene	ND	mg / Kg	1	0.03	12/01/00
X00450	XG.2000.1331-2	95-48-7	2-Methylphenol	ND	mg / Kg	1	0.03	12/01/00
X00450	XG.2000.1331-2	88-74-4	2-Nitroaniline	ND	mg / Kg	1	0.3	12/01/00
X00450	XG.2000.1331-2	88-75-5	2-Nitrophenol	ND	mg / Kg	1	0.3	12/01/00
X00450	XG.2000.1331-2		3+4 Methylphenol	ND	mg / Kg	1	0.03	12/01/00
X00450	XG.2000.1338-2	91-94-1	3,3-Dichlorobenzidine	ND	mg / Kg	1	0.3	12/01/00
X00450	XG.2000.1331-2	99-09-2	3-Nitroaniline	ND	mg / Kg	1	0.3	12/01/00
X00450	XG.2000.1331-2	534-52-1	4,6-Dinitro-2-methylphenol	ND	mg / Kg	1	0.3	12/01/00
X00450	XG.2000.1331-2	101-55-3	4-Bromophenyl-phenylether	ND	mg / Kg	1	0.03	12/01/00
X00450	XG.2000.1331-2	59-50-7	4-Chloro-3-methylphenol	ND	mg / Kg	1	0.3	12/01/00
·50	XG.2000.1331-2	106-47-8	4-Chloroaniline	ND	mg / Kg	1	0.3	12/01/00

Certificate of Analysis

Client: **CH2MHILL**

Project: **0011230** **KAFB 160600**

X00450	XG.2000.1331-2	7005-72-3	4-Chlorophenyl-phenylether	ND	mg / Kg	1	0.03	12/01/00
X00450	XG.2000.1331-2	100-01-6	4-Nitroaniline	ND	mg / Kg	1	0.3	12/01/00
X00450	XG.2000.1331-2	100-02-7	4-Nitrophenol	ND	mg / Kg	1	0.6	12/01/00
X00450	XG.2000.1331-2	83-32-9	Acenaphthene	ND	mg / Kg	1	0.03	12/01/00
X00450	XG.2000.1331-2	208-96-8	Acenaphthylene	ND	mg / Kg	1	0.03	12/01/00
X00450	XG.2000.1331-2	62-53-3	Aniline	ND	mg / Kg	1	0.3	12/01/00
X00450	XG.2000.1331-2	120-12-7	Anthracene	ND	mg / Kg	1	0.03	12/01/00
X00450	XG.2000.1331-2		Azobenzene&1,2-Diphenylhydrazine	ND	mg / Kg	1	0.03	12/01/00
X00450	XG.2000.1331-2	56-55-3	Benzo (a) anthracene	ND	mg / Kg	1	0.03	12/01/00
X00450	XG.2000.1331-2	50-32-8	Benzo(a)pyrene	ND	mg / Kg	1	0.03	12/01/00
X00450	XG.2000.1331-2		Benzo(b & k)fluoranthene	ND	mg / Kg	1	0.03	12/01/00
X00450	XG.2000.1331-2	191-24-2	Benzo(g,h,i)perylene	ND	mg / Kg	1	0.3	12/01/00
X00450	XG.2000.1331-2	64-85-0	Benzoic acid	ND	mg / Kg	1	3	12/01/00
X00450	XG.2000.1331-2	100-51-6	Benzyl alcohol	ND	mg / Kg	1	1.5	12/01/00
X00450	XG.2000.1331-2	111-44-4	bis (2-Chloroethyl) ether	ND	mg / Kg	1	0.03	12/01/00
X00450	XG.2000.1331-2	111-91-1	bis(2-Chloroethoxy)methane	ND	mg / Kg	1	0.03	12/01/00
X00450	XG.2000.1331-2	108-60-1	bis(2-Chloroisopropyl)ether	ND	mg / Kg	1	0.03	12/01/00
X00450	XG.2000.1331-2	117-81-7	bis(2-Ethylhexyl)phthalate	ND	mg / Kg	1	0.3	12/01/00
X00450	XG.2000.1331-2	85-68-7	Butylbenzylphthalate	ND	mg / Kg	1	0.03	12/01/00
X00450	XG.2000.1331-2	218-01-9	Chrysene	ND	mg / Kg	1	0.03	12/01/00
X00450	XG.2000.1331-2	84-74-2	di-n-Butylphthalate	ND	mg / Kg	1	0.3	12/01/00
X00450	XG.2000.1331-2	117-84-0	di-n-Octylpthalate	ND	mg / Kg	1	0.3	12/01/[illegible]
X00450	XG.2000.1331-2	53-70-3	Dibenz(a,h)anthracene	ND	mg / Kg	1	0.3	12/01
X00450	XG.2000.1331-2	132-64-9	Dibenzofuran	ND	mg / Kg	1	0.03	12/01/00
X00450	XG.2000.1331-2	84-66-2	Diethylphthalate	ND	mg / Kg	1	0.03	12/01/00
X00450	XG.2000.1331-2	131-11-3	Dimethylphthalate	ND	mg / Kg	1	0.03	12/01/00
X00450	XG.2000.1331-2	206-44-0	Fluoranthene	ND	mg / Kg	1	0.03	12/01/00
X00450	XG.2000.1331-2	86737	Fluorene	ND	mg / Kg	1	0.03	12/01/00
X00450	XG.2000.1331-2	118-74-1	Hexachlorobenzene	ND	mg / Kg	1	0.03	12/01/00
X00450	XG.2000.1331-2	87-68-3	Hexachlorobutadiene	ND	mg / Kg	1	0.03	12/01/00
X00450	XG.2000.1331-2	77-47-4	Hexachlorocyclopentadiene	ND	mg / Kg	1	1.5	12/01/00
X00450	XG.2000.1331-2	67-72-1	Hexachloroethane	ND	mg / Kg	1	0.03	12/01/00
X00450	XG.2000.1331-2	193-39-5	Indeno(1,2,3-cd)pyrene	ND	mg / Kg	1	0.3	12/01/00
X00450	XG.2000.1331-2	78-59-1	Isophorone	ND	mg / Kg	1	0.03	12/01/00
X00450	XG.2000.1331-2	621-64-7	n-Nitroso-di-n-propylamine	ND	mg / Kg	1	0.03	12/01/00
X00450	XG.2000.1331-2	62-75-9	n-Nitroso-dimethyl-amine	ND	mg / Kg	1	0.3	12/01/00
X00450	XG.2000.1331-2	86-30-6	n-Nitrosodiphenylamine	ND	mg / Kg	1	0.03	12/01/00
X00450	XG.2000.1331-2	91-20-3	Naphthalene	ND	mg / Kg	1	0.03	12/01/00
X00450	XG.2000.1331-2	98-95-3	Nitrobenzene	ND	mg / Kg	1	0.03	12/01/00
X00450	XG.2000.1331-2	87-86-5	Pentachlorophenol	ND	mg / Kg	1	0.3	12/01/00
X00450	XG.2000.1331-2	85-01-8	Phenanthrene	ND	mg / Kg	1	0.03	12/01/00
X00450	XG.2000.1331-2	108-95-2	Phenol	ND	mg / Kg	1	0.3	12/01/00
X00450	XG.2000.1331-2	129-00-0	Pyrene	ND	mg / Kg	1	0.03	12/01/00
X00450	XG.2000.1331-2	110-86-1	Pyridine	ND	mg / Kg	1	0.3	12/01/00

Assaigai Analytical Laboratories, Inc.

Certificate of Analysis

t: CH2MHILL
Project: 0011230 KAFB 160600

Client Sample ID *SB-29-120'* Sample Matrix *SOIL* Sample Collected *11/28/00 10:05:00*

QC Group	Run Sequence	CAS #	Analyte	Result	Units	Dilution Factor	Detection Limit	Code	Run Date
0011230-04A		SW846 5030A/8015A GRO by GC/FID							
X00443	XG.2000.1305-5		Gasoline Range Organics	ND	mg / Kg	1	0.25		11/29/00
0011230-04B		SW846 ME/8015A Diesel Range Organics by GC/FID							
X00441	XG.2000.1306-5		Diesel Range Organics	ND	mg / Kg	1	25		11/29/00

Client Sample ID *SB-29-130'* Sample Matrix *SOIL* Sample Collected *11/28/00 11:55:00*

QC Group	Run Sequence	CAS #	Analyte	Result	Units	Dilution Factor	Detection Limit	Code	Run Date
0011230-05A		SW846 5030A/8015A GRO by GC/FID							
X00443	XG.2000.1305-6		Gasoline Range Organics	ND	mg / Kg	1	0.25		11/29/00
0011230-05B		SW846 ME/8015A Diesel Range Organics by GC/FID							
I	XG.2000.1306-6		Diesel Range Organics	ND	mg / Kg	1	25		11/29/00

**** Sample specific Detection Limit is determined by multiplying the sample Dilution Factor by the listed Reporting Detection Limit. ****

**** ND = Not detected: less than the sample specific Detection Limit. Results relate only to the items tested. ****

Assaigai Analytical Laboratories, Inc.

Quality Control Summary

Explanation of codes

D *Not applicable due to sample dilution*
L *Not applicable due to MDL proximity*

Client: CH2MHILL
Project: 0011230 KAFB 160600

QC Type **LCS: Lab Control Spike** QC Matrix **SOLID**

QC Group	Run Sequence	CAS #	Analyte	Result	Units	Dilution Factor	Detection Limit	Code	Run Date
X00441-002		**SW846 ME/8015A Diesel Range Organics by GC/FID**							
X00441	XG.2000.1276-2		Diesel Range Organics	85	% Recovery	1	NA		11/16/00
X00443-002		**SW846 5030A/8015A GRO by GC/FID**							
X00443	XG.2000.1275-2		Gasoline Range Organics	96	% Recovery	1	NA		11/16/00
X00450-002		**8270**							
X00450	XG.2000.1307-4		1,4-DICHLOROBENZENE CCC	71	% Recovery	1	NA		11/28/00
X00450-002		**SW846 3550A/8270B SVOCs by GC/MS**							
X00450	XG.2000.1307-4	120-82-1	1,2,4-Trichlorobenzene	69	% Recovery	1	NA		11/28/00
X00450	XG.2000.1307-4	121-14-2	2,4-Dinitrotoluene	78	% Recovery	1	NA		11/28/00
X00450	XG.2000.1307-4	95-57-8	2-Chlorophenol	73	% Recovery	1	NA		11/28/00
X00450	XG.2000.1307-4	59-50-7	4-Chloro-3-methylphenol	78	% Recovery	1	NA		11/28/00
X00450	XG.2000.1307-4	100-02-7	4-Nitrophenol	83	% Recovery	1	NA		11/28/00
X00450	XG.2000.1307-4	83-32-9	Acenaphthene	77	% Recovery	1	NA		11/28/00
X00450	XG.2000.1307-4	117-84-0	di-n-Octylpthalate	78	% Recovery	1	NA		11/28/00
X00450	XG.2000.1307-4	621-64-7	n-Nitroso-di-n-propylamine	87	% Recovery	1	NA		11/28/00
[illegible]50	XG.2000.1307-4	87-86-5	Pentachlorophenol	85	% Recovery	1	NA		11/28/00
[illegible]0	XG.2000.1307-4	108-95-2	Phenol	68	% Recovery	1	NA		11/28/00
X00450	XG.2000.1307-4	129-00-0	Pyrene	77	% Recovery	1	NA		11/28/00
X00454-003		**SW846 8260A Purgeable VOCs by GC/MS**							
X00454	XG.2000.1313-3	75-34-3	1,1 Dichloroethene	113	% Recovery	1	NA		11/29/00
X00454	XG.2000.1313-3	106-46-7	1,4 Dichlorobenzene	100	% Recovery	1	NA		11/29/00
X00454	XG.2000.1313-3	71-43-2	Benzene	112	% Recovery	1	NA		11/29/00
X00454	XG.2000.1313-3	108-90-7	Chlorobenzene	107	% Recovery	1	NA		11/29/00
X00454	XG.2000.1313-3	108-88-3	Toluene	112	% Recovery	1	NA		11/29/00
X00454	XG.2000.1313-3	79-01-6	Trichloroethene	110	% Recovery	1	NA		11/29/00

QC Type **LCSD: Lab Control Spike Duplicate Accuracy** QC Matrix **SOLID**

QC Group	Run Sequence	CAS #	Analyte	Result	Units	Dilution Factor	Detection Limit	Code	Run Date
X00441-003		**SW846 ME/8015A Diesel Range Organics by GC/FID**							
X00441	XG.2000.1276-3		Diesel Range Organics	84	% Recovery	1	NA		11/16/00
X00443-003		**SW846 5030A/8015A GRO by GC/FID**							
X00443	XG.2000.1275-3		Gasoline Range Organics	96	% Recovery	1	NA		11/16/00
X00450-003		**8270**							
X00450	XG.2000.1307-5		1,4-DICHLOROBENZENE CCC	75	% Recovery	1	NA		11/28/00
X00450-003		**SW846 3550A/8270B SVOCs by GC/MS**							
[illegible]50	XG.2000.1307-5	120-82-1	1,2,4-Trichlorobenzene	70	% Recovery	1	NA		11/28/00
[illegible]50	XG.2000.1307-5	121-14-2	2,4-Dinitrotoluene	78	% Recovery	1	NA		11/28/00

Quality Control Summary

Client: **CH2MHILL**
Project: **0011230** **KAFB 160600**

RECEIVED DEC 1 0 2000

Explanation of codes
D *Not applicable due to sample dilu*
L *Not applicable due to MDL proxi*

X00450	XG.2000.1307-5	95-57-8	2-Chlorophenol	76	% Recovery	1	NA		11/28/00
X00450	XG.2000.1307-5	59-50-7	4-Chloro-3-methylphenol	78	% Recovery	1	NA		11/28/00
X00450	XG.2000.1307-5	100-02-7	4-Nitrophenol	83	% Recovery	1	NA		11/28/00
X00450	XG.2000.1307-5	83-32-9	Acenaphthene	78	% Recovery	1	NA		11/28/00
X00450	XG.2000.1307-5	117-84-0	di-n-Octylpthalate	76	% Recovery	1	NA		11/28/00
X00450	XG.2000.1307-5	621-64-7	n-Nitroso-di-n-propylamine	87	% Recovery	1	NA		11/28/00
X00450	XG.2000.1307-5	87-86-5	Pentachlorophenol	86	% Recovery	1	NA		11/28/00
X00450	XG.2000.1307-5	108-95-2	Phenol	71	% Recovery	1	NA		11/28/00
X00450	XG.2000.1307-5	129-00-0	Pyrene	78	% Recovery	1	NA		11/28/00
X00454-004		SW846 8260A Purgeable VOCs by GC/MS							
X00454	XG.2000.1313-4	75-34-3	1,1 Dichloroethene	107	% Recovery	1	NA		11/29/00
X00454	XG.2000.1313-4	106-46-7	1,4 Dichlorobenzene	98	% Recovery	1	NA		11/29/00
X00454	XG.2000.1313-4	71-43-2	Benzene	108	% Recovery	1	NA		11/29/00
X00454	XG.2000.1313-4	108-90-7	Chlorobenzene	106	% Recovery	1	NA		11/29/00
X00454	XG.2000.1313-4	108-88-3	Toluene	109	% Recovery	1	NA		11/29/00
X00454	XG.2000.1313-4	79-01-6	Trichloroethene	108	% Recovery	1	NA		11/29/00

QC Type **LCSD: Lab Control Spike Duplicate Precision** QC Matrix **SOLID**

QC Group	Run Sequence	CAS #	Analyte	Result	Units	Dilution Factor	Detection Limit	Code	Run Date
X00441-003		SW846 ME/8015A Diesel Range Organics by GC/FID							
X00441	XG.2000.1276-3		Diesel Range Organics	< 1	RPD	1	NA		11/1
X00443-003		SW846 5030A/8015A GRO by GC/FID							
X00443	XG.2000.1275-3		Gasoline Range Organics	< 1	RPD	1	NA		11/16/00
X00450-003		8270							
X00450	XG.2000.1307-5		1,4-DICHLOROBENZENE CCC	5	RPD	1	NA		11/28/00
X00450-003		SW846 3550A/8270B SVOCs by GC/MS							
X00450	XG.2000.1307-5	120-82-1	1,2,4-Trichlorobenzene	3	RPD	1	NA		11/28/00
X00450	XG.2000.1307-5	121-14-2	2,4-Dinitrotoluene	< 1	RPD	1	NA		11/28/00
X00450	XG.2000.1307-5	95-57-8	2-Chlorophenol	5	RPD	1	NA		11/28/00
X00450	XG.2000.1307-5	59-50-7	4-Chloro-3-methylphenol	< 1	RPD	1	NA		11/28/00
X00450	XG.2000.1307-5	100-02-7	4-Nitrophenol	< 1	RPD	1	NA		11/28/00
X00450	XG.2000.1307-5	83-32-9	Acenaphthene	< 1	RPD	1	NA		11/28/00
X00450	XG.2000.1307-5	117-84-0	di-n-Octylpthalate	2	RPD	1	NA		11/28/00
X00450	XG.2000.1307-5	621-64-7	n-Nitroso-di-n-propylamine	< 1	RPD	1	NA		11/28/00
X00450	XG.2000.1307-5	87-86-5	Pentachlorophenol	1	RPD	1	NA		11/28/00
X00450	XG.2000.1307-5	108-95-2	Phenol	4	RPD	1	NA		11/28/00
X00450	XG.2000.1307-5	129-00-0	Pyrene	< 1	RPD	1	NA		11/28/00
X00454-004		SW846 8260A Purgeable VOCs by GC/MS							
X00454	XG.2000.1313-4	75-34-3	1,1 Dichloroethene	5	RPD	1	NA		11/29/00
X00454	XG.2000.1313-4	106-46-7	1,4 Dichlorobenzene	1	RPD	1	NA		11/29/00
X00454	XG.2000.1313-4	71-43-2	Benzene	3	RPD	1	NA		11/29/00
X00454	XG.2000.1313-4	108-90-7	Chlorobenzene	1	RPD	1	NA		11/29/00
X00454	XG.2000.1313-4	108-88-3	Toluene	2	RPD	1	NA		11/29/00
X00454	XG.2000.1313-4	79-01-6	Trichloroethene	2	RPD	1	NA		11/29

Quality Control Summary

Client: CH2MHILL

ct: 0011230 KAFB 160600

Explanation of codes

D *Not applicable due to sample dilution*

L *Not applicable due to MDL proximity*

QC Type **MB: Method Blank** QC Matrix **SOLID**

QC Group	Run Sequence	CAS #	Analyte	Result	Units	Dilution Factor	Detection Limit	Code	Run Date
X00441-001		**SW846 ME/8015A Diesel Range Organics by GC/FID**							
X00441	XG.2000.1276-1		Diesel Range Organics	ND	mg / Kg	1	25		11/16/00
X00441-006		**SW846 ME/8015A Diesel Range Organics by GC/FID**							
X00441	XG.2000.1276-4		Diesel Range Organics	ND	mg / Kg	1	25		11/16/00
X00441-016		**SW846 ME/8015A Diesel Range Organics by GC/FID**							
X00441	XG.2000.1287-1		Diesel Range Organics	ND	mg / Kg	1	25		11/18/00
X00441-019		**SW846 ME/8015A Diesel Range Organics by GC/FID**							
X00441	XG.2000.1306-1		Diesel Range Organics	ND	mg / Kg	1	25		11/28/00
X00441-025		**SW846 ME/8015A Diesel Range Organics by GC/FID**							
X00441	XG.2000.1311-1		Diesel Range Organics	ND	mg / Kg	1	25		11/29/00
X00443-001		**SW846 5030A/8015A GRO by GC/FID**							
X00443	XG.2000.1275-1		Gasoline Range Organics	ND	mg / Kg	1	0.25		11/16/00
X00443-013		**SW846 5030A/8015A GRO by GC/FID**							
X00443	XG.2000.1286-1		Gasoline Range Organics	ND	mg / Kg	1	0.25		11/18/00
3-016		**SW846 5030A/8015A GRO by GC/FID**							
3	XG.2000.1305-1		Gasoline Range Organics	ND	mg / Kg	1	0.25		11/28/00
X00443-022		**SW846 5030A/8015A GRO by GC/FID**							
X00443	XG.2000.1310-1		Gasoline Range Organics	ND	mg / Kg	1	0.25		11/29/00
X00450-001		**8270**							
X00450	XG.2000.1307-3		1,4-DICHLOROBENZENE CCC	ND	mg / Kg	1	0.03		11/28/00
X00450-001		**SW846 3550A/8270B SVOCs by GC/MS**							
X00450	XG.2000.1307-3	120-82-1	1,2,4-Trichlorobenzene	ND	mg / Kg	1	0.03		11/28/00
X00450	XG.2000.1307-3	95-50-1	1,2-Dichlorobenzene	ND	mg / Kg	1	0.03		11/28/00
X00450	XG.2000.1307-3	541-73-1	1,3-Dichlorobenzene	ND	mg / Kg	1	0.03		11/28/00
X00450	XG.2000.1307-3	90-12-0	1-Methylnaphthalene	ND	mg / Kg	1	0.03		11/28/00
X00450	XG.2000.1307-3	58-90-2	2,3,4,6-Tetrachlorophenol	ND	mg / Kg	1	1.5		11/28/00
X00450	XG.2000.1307-3	95-95-4	2,4,5-Trichlorophenol	ND	mg / Kg	1	0.3		11/28/00
X00450	XG.2000.1307-3	88-06-2	2,4,6-Trichlorophenol	ND	mg / Kg	1	0.3		11/28/00
X00450	XG.2000.1307-3	120-83-2	2,4-Dichlorophenol	ND	mg / Kg	1	0.3		11/28/00
X00450	XG.2000.1307-3	105-67-9	2,4-Dimethylphenol	ND	mg / Kg	1	0.03		11/28/00
X00450	XG.2000.1307-3	51-28-5	2,4-Dinitrophenol	ND	mg / Kg	1	0.67		11/28/00
X00450	XG.2000.1307-3	121-14-2	2,4-Dinitrotoluene	ND	mg / Kg	1	0.3		11/28/00
X00450	XG.2000.1307-3	606-20-2	2,6-Dinitrotoluene	ND	mg / Kg	1	0.3		11/28/00
X00450	XG.2000.1307-3	91-58-7	2-Chloronaphthalene	ND	mg / Kg	1	0.03		11/28/00
X00450	XG.2000.1307-3	95-57-8	2-Chlorophenol	ND	mg / Kg	1	0.03		11/28/00
X00450	XG.2000.1307-3	91-57-6	2-Methylnaphthalene	ND	mg / Kg	1	0.03		11/28/00
X00450	XG.2000.1307-3	95-48-7	2-Methylphenol	ND	mg / Kg	1	0.03		11/28/00
X00450	XG.2000.1307-3	88-74-4	2-Nitroaniline	ND	mg / Kg	1	0.3		11/28/00
)	XG.2000.1307-3	88-75-5	2-Nitrophenol	ND	mg / Kg	1	0.3		11/28/00

Quality Control Summary

Client: **CH2MHILL**

Project: **0011230** **KAFB 160600**

Explanation of codes

D *Not applicable due to sample diluti*

L *Not applicable due to MDL proxin*

X00450	XG.2000.1307-3		3+4 Methylphenol	ND	mg / Kg	1	0.03	11/28/00
X00450	XG.2000.1318-3	91-94-1	3,3-Dichlorobenzidine	ND	mg / Kg	1	0.3	11/28/00
X00450	XG.2000.1307-3	99-09-2	3-Nitroaniline	ND	mg / Kg	1	0.3	11/28/00
X00450	XG.2000.1307-3	534-52-1	4,6-Dinitro-2-methylphenol	ND	mg / Kg	1	0.3	11/28/00
X00450	XG.2000.1307-3	101-55-3	4-Bromophenyl-phenylether	ND	mg / Kg	1	0.03	11/28/00
X00450	XG.2000.1307-3	59-50-7	4-Chloro-3-methylphenol	ND	mg / Kg	1	0.3	11/28/00
X00450	XG.2000.1307-3	106-47-8	4-Chloroaniline	ND	mg / Kg	1	0.3	11/28/00
X00450	XG.2000.1307-3	7005-72-3	4-Chlorophenyl-phenylether	ND	mg / Kg	1	0.03	11/28/00
X00450	XG.2000.1307-3	100-01-6	4-Nitroaniline	ND	mg / Kg	1	0.3	11/28/00
X00450	XG.2000.1307-3	100-02-7	4-Nitrophenol	ND	mg / Kg	1	0.6	11/28/00
X00450	XG.2000.1307-3	83-32-9	Acenaphthene	ND	mg / Kg	1	0.03	11/28/00
X00450	XG.2000.1307-3	208-96-8	Acenaphthylene	ND	mg / Kg	1	0.03	11/28/00
X00450	XG.2000.1307-3	62-53-3	Aniline	ND	mg / Kg	1	0.3	11/28/00
X00450	XG.2000.1307-3	120-12-7	Anthracene	ND	mg / Kg	1	0.03	11/28/00
X00450	XG.2000.1307-3		Azobenzene&1,2-Diphenylhydrazine	ND	mg / Kg	1	0.03	11/28/00
X00450	XG.2000.1307-3	56-55-3	Benzo (a) anthracene	ND	mg / Kg	1	0.03	11/28/00
X00450	XG.2000.1307-3	50-32-8	Benzo(a)pyrene	ND	mg / Kg	1	0.03	11/28/00
X00450	XG.2000.1307-3		Benzo(b & k)fluoranthene	ND	mg / Kg	1	0.03	11/28/00
X00450	XG.2000.1307-3	191-24-2	Benzo(g,h,i)perylene	ND	mg / Kg	1	0.3	11/28/00
X00450	XG.2000.1307-3	64-85-0	Benzoic acid	ND	mg / Kg	1	3	11/28/00
X00450	XG.2000.1307-3	100-51-6	Benzyl alcohol	ND	mg / Kg	1	1.5	11/28/00
X00450	XG.2000.1307-3	111-44-4	bis (2-Chloroethyl) ether	ND	mg / Kg	1	0.03	11/28/00
X00450	XG.2000.1307-3	111-91-1	bis(2-Chloroethoxy)methane	ND	mg / Kg	1	0.03	11/28/00
X00450	XG.2000.1307-3	108-60-1	bis(2-Chloroisopropyl)ether	ND	mg / Kg	1	0.03	11/28
X00450	XG.2000.1307-3	117-81-7	bis(2-Ethylhexyl)phthalate	ND	mg / Kg	1	0.3	11/28/00
X00450	XG.2000.1307-3	85-68-7	Butylbenzylphthalate	ND	mg / Kg	1	0.03	11/28/00
X00450	XG.2000.1307-3	218-01-9	Chrysene	ND	mg / Kg	1	0.03	11/28/00
X00450	XG.2000.1307-3	84-74-2	di-n-Butylphthalate	ND	mg / Kg	1	0.3	11/28/00
X00450	XG.2000.1307-3	117-84-0	di-n-Octylpthalate	ND	mg / Kg	1	0.3	11/28/00
X00450	XG.2000.1307-3	53-70-3	Dibenz(a,h)anthracene	ND	mg / Kg	1	0.3	11/28/00
X00450	XG.2000.1307-3	132-64-9	Dibenzofuran	ND	mg / Kg	1	0.03	11/28/00
X00450	XG.2000.1307-3	84-66-2	Diethylphthalate	ND	mg / Kg	1	0.03	11/28/00
X00450	XG.2000.1307-3	131-11-3	Dimethylphthalate	ND	mg / Kg	1	0.03	11/28/00
X00450	XG.2000.1307-3	206-44-0	Fluoranthene	ND	mg / Kg	1	0.03	11/28/00
X00450	XG.2000.1307-3	86737	Fluorene	ND	mg / Kg	1	0.03	11/28/00
X00450	XG.2000.1307-3	118-74-1	Hexachlorobenzene	ND	mg / Kg	1	0.03	11/28/00
X00450	XG.2000.1307-3	87-68-3	Hexachlorobutadiene	ND	mg / Kg	1	0.03	11/28/00
X00450	XG.2000.1307-3	77-47-4	Hexachlorocyclopentadiene	ND	mg / Kg	1	1.5	11/28/00
X00450	XG.2000.1307-3	67-72-1	Hexachloroethane	ND	mg / Kg	1	0.03	11/28/00
X00450	XG.2000.1307-3	193-39-5	Indeno(1,2,3-cd)pyrene	ND	mg / Kg	1	0.3	11/28/00
X00450	XG.2000.1307-3	78-59-1	Isophorone	ND	mg / Kg	1	0.03	11/28/00
X00450	XG.2000.1307-3	621-64-7	n-Nitroso-di-n-propylamine	ND	mg / Kg	1	0.03	11/28/00
X00450	XG.2000.1307-3	62-75-9	n-Nitroso-dimethyl-amine	ND	mg / Kg	1	0.3	11/28/00
X00450	XG.2000.1307-3	86-30-6	n-Nitrosodiphenylamine	ND	mg / Kg	1	0.03	11/28/00
X00450	XG.2000.1307-3	91-20-3	Naphthalene	ND	mg / Kg	1	0.03	11/28/00
X00450	XG.2000.1307-3	98-95-3	Nitrobenzene	ND	mg / Kg	1	0.03	11/28/00
X00450	XG.2000.1307-3	87-86-5	Pentachlorophenol	ND	mg / Kg	1	0.3	11/28/00
X00450	XG.2000.1307-3	85-01-8	Phenanthrene	ND	mg / Kg	1	0.03	11/28/00
X00450	XG.2000.1307-3	108-95-2	Phenol	ND	mg / Kg	1	0.3	11/28/00
X00450	XG.2000.1307-3	129-00-0	Pyrene	ND	mg / Kg	1	0.03	11/28

Quality Control Summary

Explanation of codes

D *Not applicable due to sample dilution*
L *Not applicable due to MDL proximity*

Client: **CH2MHILL**
Project: **0011230 KAFB 160600**

X00450	XG.2000.1307-3	110-86-1	Pyridine	ND	mg / Kg	1	0.3	11/28/00
X00450-007		**SW846 3550A/8270B SVOCs by GC/MS**						
X00450	XG.2000.1331-1	120-82-1	1,2,4-Trichlorobenzene	ND	mg / Kg	1	0.03	12/01/00
X00450	XG.2000.1331-1	95-50-1	1,2-Dichlorobenzene	ND	mg / Kg	1	0.03	12/01/00
X00450	XG.2000.1331-1	541-73-1	1,3-Dichlorobenzene	ND	mg / Kg	1	0.03	12/01/00
X00450	XG.2000.1331-1	106-46-7	1,4-Dichlorobenzene	ND	mg / Kg	1	0.03	12/01/00
X00450	XG.2000.1331-1	90-12-0	1-Methylnaphthalene	ND	mg / Kg	1	0.03	12/01/00
X00450	XG.2000.1331-1	58-90-2	2,3,4,6-Tetrachlorophenol	ND	mg / Kg	1	1.5	12/01/00
X00450	XG.2000.1331-1	95-95-4	2,4,5-Trichlorophenol	ND	mg / Kg	1	0.3	12/01/00
X00450	XG.2000.1331-1	88-06-2	2,4,6-Trichlorophenol	ND	mg / Kg	1	0.3	12/01/00
X00450	XG.2000.1331-1	120-83-2	2,4-Dichlorophenol	ND	mg / Kg	1	0.3	12/01/00
X00450	XG.2000.1331-1	105-67-9	2,4-Dimethylphenol	ND	mg / Kg	1	0.03	12/01/00
X00450	XG.2000.1331-1	51-28-5	2,4-Dinitrophenol	ND	mg / Kg	1	0.67	12/01/00
X00450	XG.2000.1331-1	121-14-2	2,4-Dinitrotoluene	ND	mg / Kg	1	0.3	12/01/00
X00450	XG.2000.1331-1	606-20-2	2,6-Dinitrotoluene	ND	mg / Kg	1	0.3	12/01/00
X00450	XG.2000.1331-1	91-58-7	2-Chloronaphthalene	ND	mg / Kg	1	0.03	12/01/00
X00450	XG.2000.1331-1	95-57-8	2-Chlorophenol	ND	mg / Kg	1	0.03	12/01/00
X00450	XG.2000.1331-1	91-57-6	2-Methylnaphthalene	ND	mg / Kg	1	0.03	12/01/00
X00450	XG.2000.1331-1	95-48-7	2-Methylphenol	ND	mg / Kg	1	0.03	12/01/00
X00450	XG.2000.1331-1	88-74-4	2-Nitroaniline	ND	mg / Kg	1	0.3	12/01/00
X00450	XG.2000.1331-1	88-75-5	2-Nitrophenol	ND	mg / Kg	1	0.3	12/01/00
X00450	XG.2000.1331-1		3+4 Methylphenol	ND	mg / Kg	1	0.03	12/01/00
X00450	XG.2000.1338-1	91-94-1	3,3-Dichlorobenzidine	ND	mg / Kg	1	0.3	12/01/00
[illegible]	XG.2000.1331-1	99-09-2	3-Nitroaniline	ND	mg / Kg	1	0.3	12/01/00
X00450	XG.2000.1331-1	534-52-1	4,6-Dinitro-2-methylphenol	ND	mg / Kg	1	0.3	12/01/00
X00450	XG.2000.1331-1	101-55-3	4-Bromophenyl-phenylether	ND	mg / Kg	1	0.03	12/01/00
X00450	XG.2000.1331-1	59-50-7	4-Chloro-3-methylphenol	ND	mg / Kg	1	0.3	12/01/00
X00450	XG.2000.1331-1	106-47-8	4-Chloroaniline	ND	mg / Kg	1	0.3	12/01/00
X00450	XG.2000.1331-1	7005-72-3	4-Chlorophenyl-phenylether	ND	mg / Kg	1	0.03	12/01/00
X00450	XG.2000.1331-1	100-01-6	4-Nitroaniline	ND	mg / Kg	1	0.3	12/01/00
X00450	XG.2000.1331-1	100-02-7	4-Nitrophenol	ND	mg / Kg	1	0.6	12/01/00
X00450	XG.2000.1331-1	83-32-9	Acenaphthene	ND	mg / Kg	1	0.03	12/01/00
X00450	XG.2000.1331-1	208-96-8	Acenaphthylene	ND	mg / Kg	1	0.03	12/01/00
X00450	XG.2000.1331-1	62-53-3	Aniline	ND	mg / Kg	1	0.3	12/01/00
X00450	XG.2000.1331-1	120-12-7	Anthracene	ND	mg / Kg	1	0.03	12/01/00
X00450	XG.2000.1331-1		Azobenzene&1,2-Diphenylhydrazine	ND	mg / Kg	1	0.03	12/01/00
X00450	XG.2000.1331-1	56-55-3	Benzo (a) anthracene	ND	mg / Kg	1	0.03	12/01/00
X00450	XG.2000.1331-1	50-32-8	Benzo(a)pyrene	ND	mg / Kg	1	0.03	12/01/00
X00450	XG.2000.1331-1		Benzo(b & k)fluoranthene	ND	mg / Kg	1	0.03	12/01/00
X00450	XG.2000.1331-1	191-24-2	Benzo(g,h,i)perylene	ND	mg / Kg	1	0.3	12/01/00
X00450	XG.2000.1331-1	64-85-0	Benzoic acid	ND	mg / Kg	1	3	12/01/00
X00450	XG.2000.1331-1	100-51-6	Benzyl alcohol	ND	mg / Kg	1	1.5	12/01/00
X00450	XG.2000.1331-1	111-44-4	bis (2-Chloroethyl) ether	ND	mg / Kg	1	0.03	12/01/00
X00450	XG.2000.1331-1	111-91-1	bis(2-Chloroethoxy)methane	ND	mg / Kg	1	0.03	12/01/00
X00450	XG.2000.1331-1	108-60-1	bis(2-Chloroisopropyl)ether	ND	mg / Kg	1	0.03	12/01/00
X00450	XG.2000.1331-1	117-81-7	bis(2-Ethylhexyl)phthalate	ND	mg / Kg	1	0.3	12/01/00
X00450	XG.2000.1331-1	85-68-7	Butylbenzylphthalate	ND	mg / Kg	1	0.03	12/01/00
X00450	XG.2000.1331-1	218-01-9	Chrysene	ND	mg / Kg	1	0.03	12/01/00
[illegible]	XG.2000.1331-1	84-74-2	di-n-Butylphthalate	ND	mg / Kg	1	0.3	12/01/00

Quality Control Summary

Client: **CH2MHILL**

Project: **0011230** **KAFB 160600**

Explanation of codes

D *Not applicable due to sample dilut*

L *Not applicable due to MDL proxim*

X00450	XG.2000.1331-1	117-84-0	di-n-Octylpthalate	ND	mg / Kg	1	0.3	12/01/00
X00450	XG.2000.1331-1	53-70-3	Dibenz(a,h)anthracene	ND	mg / Kg	1	0.3	12/01/00
X00450	XG.2000.1331-1	132-64-9	Dibenzofuran	ND	mg / Kg	1	0.03	12/01/00
X00450	XG.2000.1331-1	84-66-2	Diethylphthalate	ND	mg / Kg	1	0.03	12/01/00
X00450	XG.2000.1331-1	131-11-3	Dimethylphthalate	ND	mg / Kg	1	0.03	12/01/00
X00450	XG.2000.1331-1	206-44-0	Fluoranthene	ND	mg / Kg	1	0.03	12/01/00
X00450	XG.2000.1331-1	86737	Fluorene	ND	mg / Kg	1	0.03	12/01/00
X00450	XG.2000.1331-1	118-74-1	Hexachlorobenzene	ND	mg / Kg	1	0.03	12/01/00
X00450	XG.2000.1331-1	87-68-3	Hexachlorobutadiene	ND	mg / Kg	1	0.03	12/01/00
X00450	XG.2000.1331-1	77-47-4	Hexachlorocyclopentadiene	ND	mg / Kg	1	1.5	12/01/00
X00450	XG.2000.1331-1	67-72-1	Hexachloroethane	ND	mg / Kg	1	0.03	12/01/00
X00450	XG.2000.1331-1	193-39-5	Indeno(1,2,3-cd)pyrene	ND	mg / Kg	1	0.3	12/01/00
X00450	XG.2000.1331-1	78-59-1	Isophorone	ND	mg / Kg	1	0.03	12/01/00
X00450	XG.2000.1331-1	621-64-7	n-Nitroso-di-n-propylamine	ND	mg / Kg	1	0.03	12/01/00
X00450	XG.2000.1331-1	62-75-9	n-Nitroso-dimethyl-amine	ND	mg / Kg	1	0.3	12/01/00
X00450	XG.2000.1331-1	86-30-6	n-Nitrosodiphenylamine	ND	mg / Kg	1	0.03	12/01/00
X00450	XG.2000.1331-1	91-20-3	Naphthalene	ND	mg / Kg	1	0.03	12/01/00
X00450	XG.2000.1331-1	98-95-3	Nitrobenzene	ND	mg / Kg	1	0.03	12/01/00
X00450	XG.2000.1331-1	87-86-5	Pentachlorophenol	ND	mg / Kg	1	0.3	12/01/00
X00450	XG.2000.1331-1	85-01-8	Phenanthrene	ND	mg / Kg	1	0.03	12/01/00
X00450	XG.2000.1331-1	108-95-2	Phenol	ND	mg / Kg	1	0.3	12/01/00
X00450	XG.2000.1331-1	129-00-0	Pyrene	ND	mg / Kg	1	0.03	12/01/00
X00450	XG.2000.1331-1	110-86-1	Pyridine	ND	mg / Kg	1	0.3	12/01/00
X00454-001		**SW846 8260A Purgeable VOCs by GC/MS**						
X00454	XG.2000.1313-1	75-34-3	1,1 Dichloroethane	ND	mg / Kg	1	0.005	11/29/00
X00454	XG.2000.1313-1	75-34-3	1,1 Dichloroethene	ND	mg / Kg	1	0.005	11/29/00
X00454	XG.2000.1313-1	71-55-6	1,1,1 Trichloroethane	ND	mg / Kg	1	0.005	11/29/00
X00454	XG.2000.1313-1	630-20-6	1,1,1,2 Tetrachloroethane	ND	mg / Kg	1	0.005	11/29/00
X00454	XG.2000.1313-1	79-00-5	1,1,2 Trichloroethane	ND	mg / Kg	1	0.005	11/29/00
X00454	XG.2000.1313-1	79-34-5	1,1,2,2 Tetrachloroethane	ND	mg / Kg	1	0.005	11/29/00
X00454	XG.2000.1313-1	106-93-4	1,2 Dibromoethane (EDB)	ND	mg / Kg	1	0.005	11/29/00
X00454	XG.2000.1313-1	95-50-1	1,2 Dichlorobenzene	ND	mg / Kg	1	0.005	11/29/00
X00454	XG.2000.1313-1	107-06-2	1,2 Dichloroethane	ND	mg / Kg	1	0.005	11/29/00
X00454	XG.2000.1313-1	78-87-5	1,2 Dichloropropane	ND	mg / Kg	1	0.005	11/29/00
X00454	XG.2000.1313-1	96-18-4	1,2,3 Trichloropropane	ND	mg / Kg	1	0.005	11/29/00
X00454	XG.2000.1313-1	95-63-6	1,2,4-Trimethylbenzene	ND	mg / Kg	1	0.005	11/29/00
X00454	XG.2000.1313-1	541-73-1	1,3 Dichlorobenzene	ND	mg / Kg	1	0.005	11/29/00
X00454	XG.2000.1313-1	108-67-8	1,3,5-Trimethylbenzene	ND	mg / Kg	1	0.005	11/29/00
X00454	XG.2000.1313-1	764-41-0	1,4 Dichloro-2-butene	ND	mg / Kg	1	0.05	11/29/00
X00454	XG.2000.1313-1	106-46-7	1,4 Dichlorobenzene	ND	mg / Kg	1	0.005	11/29/00
X00454	XG.2000.1313-1	78-93-3	2-Butanone (MEK)	ND	mg / Kg	1	0.025	11/29/00
X00454	XG.2000.1313-1	110-75-8	2-Chloroethylvinylether	ND	mg / Kg	1	0.025	11/29/00
X00454	XG.2000.1313-1	591-78-6	2-Hexanone (MBK)	ND	mg / Kg	1	0.025	11/29/00
X00454	XG.2000.1313-1	108-10-1	4-Methyl-2-pentanone (MIBK)	ND	mg / Kg	1	0.025	11/29/00
X00454	XG.2000.1313-1	67-64-1	Acetone	ND	mg / Kg	1	0.05	11/29/00
X00454	XG.2000.1313-1	107-02-8	Acrolein	ND	mg / Kg	1	0.1	11/29/00
X00454	XG.2000.1313-1	107-13-1	Acrylonitrile	ND	mg / Kg	1	0.1	11/29/00
X00454	XG.2000.1313-1	71-43-2	Benzene	ND	mg / Kg	1	0.005	11/29/00
X00454	XG.2000.1313-1	75-27-4	Bromodichloromethane	ND	mg / Kg	1	0.005	11/29/00
X00454	XG.2000.1313-1	75-25-2	Bromoform	ND	mg / Kg	1	0.005	11/2[illegible]

Quality Control Summary

Explanation of codes

D *Not applicable due to sample dilution*
L *Not applicable due to MDL proximity*

Client: CH2MHILL
Project: 0011230 KAFB 160600

X00454	XG.2000.1313-1	74-83-9	Bromomethane	ND	mg / Kg	1	0.025	11/29/00
X00454	XG.2000.1313-1	75-15-0	Carbon disulfide	ND	mg / Kg	1	0.025	11/29/00
X00454	XG.2000.1313-1	56-23-5	Carbon tetrachloride	ND	mg / Kg	1	0.005	11/29/00
X00454	XG.2000.1313-1	108-90-7	Chlorobenzene	ND	mg / Kg	1	0.005	11/29/00
X00454	XG.2000.1313-1	124-48-1	Chlorodibromomethane	ND	mg / Kg	1	0.005	11/29/00
X00454	XG.2000.1313-1	75-00-3	Chloroethane	ND	mg / Kg	1	0.025	11/29/00
X00454	XG.2000.1313-1	67-66-3	Chloroform	ND	mg / Kg	1	0.005	11/29/00
X00454	XG.2000.1313-1	74-87-3	Chloromethane	ND	mg / Kg	1	0.025	11/29/00
X00454	XG.2000.1313-1	156-59-2	cis-1,2 dichloroethene	ND	mg / Kg	1	0.005	11/29/00
X00454	XG.2000.1313-1	10061-01-5	cis-1,3 dichloropropene	ND	mg / Kg	1	0.005	11/29/00
X00454	XG.2000.1313-1	74-95-3	Dibromomethane	ND	mg / Kg	1	0.005	11/29/00
X00454	XG.2000.1313-1	97-63-2	Ethyl methacrylate	ND	mg / Kg	1	0.025	11/29/00
X00454	XG.2000.1313-1	100-41-4	Ethylbenzene	ND	mg / Kg	1	0.005	11/29/00
X00454	XG.2000.1313-1		Freon 113	ND	mg / Kg	1	0.025	11/29/00
X00454	XG.2000.1313-1	75-71-8	Freon 12	ND	mg / Kg	1	0.05	11/29/00
X00454	XG.2000.1313-1	74-88-4	Iodomethane	ND	mg / Kg	1	0.025	11/29/00
X00454	XG.2000.1313-1	1634-04-4	Methyl t-butyl ether (MTBE)	ND	mg / Kg	1	0.005	11/29/00
X00454	XG.2000.1313-1	75-09-2	Methylene chloride	ND	mg / Kg	1	0.05	11/29/00
X00454	XG.2000.1313-1	91-20-3	Naphthalene	ND	mg / Kg	1	0.025	11/29/00
X00454	XG.2000.1313-1	95-47-6	o-Xylene	ND	mg / Kg	1	0.005	11/29/00
X00454	XG.2000.1313-1	108-38-3/106-42	p/m Xylenes	ND	mg / Kg	1	0.01	11/29/00
X00454	XG.2000.1313-1	100-42-5	Styrene	ND	mg / Kg	1	0.005	11/29/00
X00454	XG.2000.1313-1	156-60-5	t-1,2 Dichloroethene	ND	mg / Kg	1	0.005	11/29/00
[illegible]	XG.2000.1313-1	10061-02-6	t-1,3 Dichloropropene	ND	mg / Kg	1	0.005	11/29/00
X00454	XG.2000.1313-1	127-18-4	Tetrachloroethene	ND	mg / Kg	1	0.005	11/29/00
X00454	XG.2000.1313-1	108-88-3	Toluene	ND	mg / Kg	1	0.005	11/29/00
X00454	XG.2000.1313-1	79-01-6	Trichloroethene	ND	mg / Kg	1	0.005	11/29/00
X00454	XG.2000.1313-1	75-69-4	Trichlorofluoromethane	ND	mg / Kg	1	0.025	11/29/00
X00454	XG.2000.1313-1	108-05-4	Vinyl acetate	ND	mg / Kg	1	0.025	11/29/00
X00454	XG.2000.1313-1	75-01-4	Vinyl chloride	ND	mg / Kg	1	0.025	11/29/00
X00454-010		**SW846 8260A Purgeable VOCs by GC/MS**						
X00454	XG.2000.1313-10	75-34-3	1,1 Dichloroethane	ND	mg / Kg	1	0.005	11/30/00
X00454	XG.2000.1313-10	75-34-3	1,1 Dichloroethene	ND	mg / Kg	1	0.005	11/30/00
X00454	XG.2000.1313-10	71-55-6	1,1,1 Trichloroethane	ND	mg / Kg	1	0.005	11/30/00
X00454	XG.2000.1313-10	630-20-6	1,1,1,2 Tetrachloroethane	ND	mg / Kg	1	0.005	11/30/00
X00454	XG.2000.1313-10	79-00-5	1,1,2 Trichloroethane	ND	mg / Kg	1	0.005	11/30/00
X00454	XG.2000.1313-10	79-34-5	1,1,2,2 Tetrachloroethane	ND	mg / Kg	1	0.005	11/30/00
X00454	XG.2000.1313-10	106-93-4	1,2 Dibromoethane (EDB)	ND	mg / Kg	1	0.005	11/30/00
X00454	XG.2000.1313-10	95-50-1	1,2 Dichlorobenzene	ND	mg / Kg	1	0.005	11/30/00
X00454	XG.2000.1313-10	107-06-2	1,2 Dichloroethane	ND	mg / Kg	1	0.005	11/30/00
X00454	XG.2000.1313-10	78-87-5	1,2 Dichloropropane	ND	mg / Kg	1	0.005	11/30/00
X00454	XG.2000.1313-10	96-18-4	1,2,3 Trichloropropane	ND	mg / Kg	1	0.005	11/30/00
X00454	XG.2000.1313-10	95-63-6	1,2,4-Trimethylbenzene	ND	mg / Kg	1	0.005	11/30/00
X00454	XG.2000.1313-10	541-73-1	1,3 Dichlorobenzene	ND	mg / Kg	1	0.005	11/30/00
X00454	XG.2000.1313-10	108-67-8	1,3,5-Trimethylbenzene	ND	mg / Kg	1	0.005	11/30/00
X00454	XG.2000.1313-10	764-41-0	1,4 Dichloro-2-butene	ND	mg / Kg	1	0.05	11/30/00
X00454	XG.2000.1313-10	106-46-7	1,4 Dichlorobenzene	ND	mg / Kg	1	0.005	11/30/00
X00454	XG.2000.1313-10	78-93-3	2-Butanone (MEK)	ND	mg / Kg	1	0.025	11/30/00
[illegible]	XG.2000.1313-10	110-75-8	2-Chloroethylvinylether	ND	mg / Kg	1	0.025	11/30/00

Quality Control Summary

Client: **CH2MHILL**

Project: **0011230** **KAFB 160600**

Explanation of codes

D *Not applicable due to sample diluti*

L *Not applicable due to MDL proxin*

X00454	XG.2000.1313-10	591-78-6	2-Hexanone (MBK)	ND	mg / Kg	1	0.025	11/30/00
X00454	XG.2000.1313-10	108-10-1	4-Methyl-2-pentanone (MIBK)	ND	mg / Kg	1	0.025	11/30/00
X00454	XG.2000.1313-10	67-64-1	Acetone	ND	mg / Kg	1	0.05	11/30/00
X00454	XG.2000.1313-10	107-02-8	Acrolein	ND	mg / Kg	1	0.1	11/30/00
X00454	XG.2000.1313-10	107-13-1	Acrylonitrile	ND	mg / Kg	1	0.1	11/30/00
X00454	XG.2000.1313-10	71-43-2	Benzene	ND	mg / Kg	1	0.005	11/30/00
X00454	XG.2000.1313-10	75-27-4	Bromodichloromethane	ND	mg / Kg	1	0.005	11/30/00
X00454	XG.2000.1313-10	75-25-2	Bromoform	ND	mg / Kg	1	0.005	11/30/00
X00454	XG.2000.1313-10	74-83-9	Bromomethane	ND	mg / Kg	1	0.025	11/30/00
X00454	XG.2000.1313-10	75-15-0	Carbon disulfide	ND	mg / Kg	1	0.025	11/30/00
X00454	XG.2000.1313-10	56-23-5	Carbon tetrachloride	ND	mg / Kg	1	0.005	11/30/00
X00454	XG.2000.1313-10	108-90-7	Chlorobenzene	ND	mg / Kg	1	0.005	11/30/00
X00454	XG.2000.1313-10	124-48-1	Chlorodibromomethane	ND	mg / Kg	1	0.005	11/30/00
X00454	XG.2000.1313-10	75-00-3	Chloroethane	ND	mg / Kg	1	0.025	11/30/00
X00454	XG.2000.1313-10	67-66-3	Chloroform	ND	mg / Kg	1	0.005	11/30/00
X00454	XG.2000.1313-10	74-87-3	Chloromethane	ND	mg / Kg	1	0.025	11/30/00
X00454	XG.2000.1313-10	156-59-2	cis-1,2 dichloroethene	ND	mg / Kg	1	0.005	11/30/00
X00454	XG.2000.1313-10	10061-01-5	cis-1,3 dichloropropene	ND	mg / Kg	1	0.005	11/30/00
X00454	XG.2000.1313-10	74-95-3	Dibromomethane	ND	mg / Kg	1	0.005	11/30/00
X00454	XG.2000.1313-10	97-63-2	Ethyl methacrylate	ND	mg / Kg	1	0.025	11/30/00
X00454	XG.2000.1313-10	100-41-4	Ethylbenzene	ND	mg / Kg	1	0.005	11/30/00
X00454	XG.2000.1313-10		Freon 113	ND	mg / Kg	1	0.025	11/30/00
X00454	XG.2000.1313-10	75-71-8	Freon 12	ND	mg / Kg	1	0.05	11/30/00
X00454	XG.2000.1313-10	74-88-4	Iodomethane	ND	mg / Kg	1	0.025	11/30/00
X00454	XG.2000.1313-10	1634-04-4	Methyl t-butyl ether (MTBE)	ND	mg / Kg	1	0.005	11/30
X00454	XG.2000.1313-10	75-09-2	Methylene chloride	ND	mg / Kg	1	0.05	11/30/00
X00454	XG.2000.1313-10	91-20-3	Naphthalene	ND	mg / Kg	1	0.025	11/30/00
X00454	XG.2000.1313-10	95-47-6	o-Xylene	ND	mg / Kg	1	0.005	11/30/00
X00454	XG.2000.1313-10	108-38-3/106-42	p/m Xylenes	ND	mg / Kg	1	0.01	11/30/00
X00454	XG.2000.1313-10	100-42-5	Styrene	ND	mg / Kg	1	0.005	11/30/00
X00454	XG.2000.1313-10	156-60-5	t-1,2 Dichloroethene	ND	mg / Kg	1	0.005	11/30/00
X00454	XG.2000.1313-10	10061-02-6	t-1,3 Dichloropropene	ND	mg / Kg	1	0.005	11/30/00
X00454	XG.2000.1313-10	127-18-4	Tetrachloroethene	ND	mg / Kg	1	0.005	11/30/00
X00454	XG.2000.1313-10	108-88-3	Toluene	ND	mg / Kg	1	0.005	11/30/00
X00454	XG.2000.1313-10	79-01-6	Trichloroethene	ND	mg / Kg	1	0.005	11/30/00
X00454	XG.2000.1313-10	75-69-4	Trichlorofluoromethane	ND	mg / Kg	1	0.025	11/30/00
X00454	XG.2000.1313-10	108-05-4	Vinyl acetate	ND	mg / Kg	1	0.025	11/30/00
X00454	XG.2000.1313-10	75-01-4	Vinyl chloride	ND	mg / Kg	1	0.025	11/30/00
X00454-018		**SW846 8260A Purgeable VOCs by GC/MS**						
X00454	XG.2000.1325-8	75-34-3	1,1 Dichloroethane	ND	mg / Kg	1	0.005	12/01/00
X00454	XG.2000.1326-1	75-34-3	1,1 Dichloroethane	ND	mg / Kg	1	0.005	12/01/00
X00454	XG.2000.1325-8	75-34-3	1,1 Dichloroethene	ND	mg / Kg	1	0.005	12/01/00
X00454	XG.2000.1326-1	75-34-3	1,1 Dichloroethene	ND	mg / Kg	1	0.005	12/01/00
X00454	XG.2000.1325-8	71-55-6	1,1,1 Trichloroethane	ND	mg / Kg	1	0.005	12/01/00
X00454	XG.2000.1326-1	71-55-6	1,1,1 Trichloroethane	ND	mg / Kg	1	0.005	12/01/00
X00454	XG.2000.1325-8	630-20-6	1,1,1,2 Tetrachloroethane	ND	mg / Kg	1	0.005	12/01/00
X00454	XG.2000.1326-1	630-20-6	1,1,1,2 Tetrachloroethane	ND	mg / Kg	1	0.005	12/01/00
X00454	XG.2000.1325-8	79-00-5	1,1,2 Trichloroethane	ND	mg / Kg	1	0.005	12/01/00
X00454	XG.2000.1326-1	79-00-5	1,1,2 Trichloroethane	ND	mg / Kg	1	0.005	12/01

Quality Control Summary

Explanation of codes

D *Not applicable due to sample dilution*
L *Not applicable due to MDL proximity*

Client: **CH2MHILL**
Project: **0011230 KAFB 160600**

X00454	XG.2000.1325-8	79-34-5	1,1,2,2 Tetrachloroethane	ND	mg / Kg	1	0.005	12/01/00
X00454	XG.2000.1326-1	79-34-5	1,1,2,2 Tetrachloroethane	ND	mg / Kg	1	0.005	12/01/00
X00454	XG.2000.1325-8	106-93-4	1,2 Dibromoethane (EDB)	ND	mg / Kg	1	0.005	12/01/00
X00454	XG.2000.1326-1	106-93-4	1,2 Dibromoethane (EDB)	ND	mg / Kg	1	0.005	12/01/00
X00454	XG.2000.1325-8	95-50-1	1,2 Dichlorobenzene	ND	mg / Kg	1	0.005	12/01/00
X00454	XG.2000.1326-1	95-50-1	1,2 Dichlorobenzene	ND	mg / Kg	1	0.005	12/01/00
X00454	XG.2000.1325-8	107-06-2	1,2 Dichloroethane	ND	mg / Kg	1	0.005	12/01/00
X00454	XG.2000.1326-1	107-06-2	1,2 Dichloroethane	ND	mg / Kg	1	0.005	12/01/00
X00454	XG.2000.1325-8	78-87-5	1,2 Dichloropropane	ND	mg / Kg	1	0.005	12/01/00
X00454	XG.2000.1326-1	78-87-5	1,2 Dichloropropane	ND	mg / Kg	1	0.005	12/01/00
X00454	XG.2000.1325-8	96-18-4	1,2,3 Trichloropropane	ND	mg / Kg	1	0.005	12/01/00
X00454	XG.2000.1326-1	96-18-4	1,2,3 Trichloropropane	ND	mg / Kg	1	0.005	12/01/00
X00454	XG.2000.1325-8	95-63-6	1,2,4-Trimethylbenzene	ND	mg / Kg	1	0.005	12/01/00
X00454	XG.2000.1326-1	95-63-6	1,2,4-Trimethylbenzene	ND	mg / Kg	1	0.005	12/01/00
X00454	XG.2000.1325-8	541-73-1	1,3 Dichlorobenzene	ND	mg / Kg	1	0.005	12/01/00
X00454	XG.2000.1326-1	541-73-1	1,3 Dichlorobenzene	ND	mg / Kg	1	0.005	12/01/00
X00454	XG.2000.1325-8	108-67-8	1,3,5-Trimethylbenzene	ND	mg / Kg	1	0.005	12/01/00
X00454	XG.2000.1326-1	108-67-8	1,3,5-Trimethylbenzene	ND	mg / Kg	1	0.005	12/01/00
X00454	XG.2000.1325-8	764-41-0	1,4 Dichloro-2-butene	ND	mg / Kg	1	0.05	12/01/00
X00454	XG.2000.1326-1	764-41-0	1,4 Dichloro-2-butene	ND	mg / Kg	1	0.05	12/01/00
X00454	XG.2000.1325-8	106-46-7	1,4 Dichlorobenzene	ND	mg / Kg	1	0.005	12/01/00
X00454	XG.2000.1326-1	106-46-7	1,4 Dichlorobenzene	ND	mg / Kg	1	0.005	12/01/00
X00454	XG.2000.1325-8	78-93-3	2-Butanone (MEK)	ND	mg / Kg	1	0.025	12/01/00
4	XG.2000.1326-1	78-93-3	2-Butanone (MEK)	ND	mg / Kg	1	0.025	12/01/00
04	XG.2000.1325-8	110-75-8	2-Chloroethylvinylether	ND	mg / Kg	1	0.025	12/01/00
X00454	XG.2000.1326-1	110-75-8	2-Chloroethylvinylether	ND	mg / Kg	1	0.025	12/01/00
X00454	XG.2000.1325-8	591-78-6	2-Hexanone (MBK)	ND	mg / Kg	1	0.025	12/01/00
X00454	XG.2000.1326-1	591-78-6	2-Hexanone (MBK)	ND	mg / Kg	1	0.025	12/01/00
X00454	XG.2000.1325-8	108-10-1	4-Methyl-2-pentanone (MIBK)	ND	mg / Kg	1	0.025	12/01/00
X00454	XG.2000.1326-1	108-10-1	4-Methyl-2-pentanone (MIBK)	ND	mg / Kg	1	0.025	12/01/00
X00454	XG.2000.1325-8	67-64-1	Acetone	ND	mg / Kg	1	0.05	12/01/00
X00454	XG.2000.1326-1	67-64-1	Acetone	ND	mg / Kg	1	0.05	12/01/00
X00454	XG.2000.1325-8	107-02-8	Acrolein	ND	mg / Kg	1	0.1	12/01/00
X00454	XG.2000.1326-1	107-02-8	Acrolein	ND	mg / Kg	1	0.1	12/01/00
X00454	XG.2000.1325-8	107-13-1	Acrylonitrile	ND	mg / Kg	1	0.1	12/01/00
X00454	XG.2000.1326-1	107-13-1	Acrylonitrile	ND	mg / Kg	1	0.1	12/01/00
X00454	XG.2000.1325-8	71-43-2	Benzene	ND	mg / Kg	1	0.005	12/01/00
X00454	XG.2000.1326-1	71-43-2	Benzene	ND	mg / Kg	1	0.005	12/01/00
X00454	XG.2000.1325-8	75-27-4	Bromodichloromethane	ND	mg / Kg	1	0.005	12/01/00
X00454	XG.2000.1326-1	75-27-4	Bromodichloromethane	ND	mg / Kg	1	0.005	12/01/00
X00454	XG.2000.1325-8	75-25-2	Bromoform	ND	mg / Kg	1	0.005	12/01/00
X00454	XG.2000.1326-1	75-25-2	Bromoform	ND	mg / Kg	1	0.005	12/01/00
X00454	XG.2000.1325-8	74-83-9	Bromomethane	ND	mg / Kg	1	0.025	12/01/00
X00454	XG.2000.1326-1	74-83-9	Bromomethane	ND	mg / Kg	1	0.025	12/01/00
X00454	XG.2000.1325-8	75-15-0	Carbon disulfide	ND	mg / Kg	1	0.025	12/01/00
X00454	XG.2000.1326-1	75-15-0	Carbon disulfide	ND	mg / Kg	1	0.025	12/01/00
X00454	XG.2000.1325-8	56-23-5	Carbon tetrachloride	ND	mg / Kg	1	0.005	12/01/00
X00454	XG.2000.1326-1	56-23-5	Carbon tetrachloride	ND	mg / Kg	1	0.005	12/01/00
X00454	XG.2000.1325-8	108-90-7	Chlorobenzene	ND	mg / Kg	1	0.005	12/01/00
4	XG.2000.1326-1	108-90-7	Chlorobenzene	ND	mg / Kg	1	0.005	12/01/00
X00454	XG.2000.1325-8	124-48-1	Chlorodibromomethane	ND	mg / Kg	1	0.005	12/01/00

Quality Control Summary

Client: **CH2MHILL**

Project: **0011230** **KAFB 160600**

Explanation of codes

D *Not applicable due to sample dilutio*

L *Not applicable due to MDL proxim*

X00454	XG.2000.1326-1	124-48-1	Chlorodibromomethane	ND	mg / Kg	1	0.005	12/01/00
X00454	XG.2000.1325-8	75-00-3	Chloroethane	ND	mg / Kg	1	0.025	12/01/00
X00454	XG.2000.1326-1	75-00-3	Chloroethane	ND	mg / Kg	1	0.025	12/01/00
X00454	XG.2000.1325-8	67-66-3	Chloroform	ND	mg / Kg	1	0.005	12/01/00
X00454	XG.2000.1326-1	67-66-3	Chloroform	ND	mg / Kg	1	0.005	12/01/00
X00454	XG.2000.1325-8	74-87-3	Chloromethane	ND	mg / Kg	1	0.025	12/01/00
X00454	XG.2000.1326-1	74-87-3	Chloromethane	ND	mg / Kg	1	0.025	12/01/00
X00454	XG.2000.1325-8	156-59-2	cis-1,2 dichloroethene	ND	mg / Kg	1	0.005	12/01/00
X00454	XG.2000.1326-1	156-59-2	cis-1,2 dichloroethene	ND	mg / Kg	1	0.005	12/01/00
X00454	XG.2000.1325-8	10061-01-5	cis-1,3 dichloropropene	ND	mg / Kg	1	0.005	12/01/00
X00454	XG.2000.1326-1	10061-01-5	cis-1,3 dichloropropene	ND	mg / Kg	1	0.005	12/01/00
X00454	XG.2000.1325-8	74-95-3	Dibromomethane	ND	mg / Kg	1	0.005	12/01/00
X00454	XG.2000.1326-1	74-95-3	Dibromomethane	ND	mg / Kg	1	0.005	12/01/00
X00454	XG.2000.1325-8	97-63-2	Ethyl methacrylate	ND	mg / Kg	1	0.025	12/01/00
X00454	XG.2000.1326-1	97-63-2	Ethyl methacrylate	ND	mg / Kg	1	0.025	12/01/00
X00454	XG.2000.1325-8	100-41-4	Ethylbenzene	ND	mg / Kg	1	0.005	12/01/00
X00454	XG.2000.1326-1	100-41-4	Ethylbenzene	ND	mg / Kg	1	0.005	12/01/00
X00454	XG.2000.1325-8		Freon 113	ND	mg / Kg	1	0.025	12/01/00
X00454	XG.2000.1326-1		Freon 113	ND	mg / Kg	1	0.025	12/01/00
X00454	XG.2000.1325-8	75-71-8	Freon 12	ND	mg / Kg	1	0.05	12/01/00
X00454	XG.2000.1326-1	75-71-8	Freon 12	ND	mg / Kg	1	0.05	12/01/00
X00454	XG.2000.1325-8	74-88-4	Iodomethane	ND	mg / Kg	1	0.025	12/01/00
X00454	XG.2000.1326-1	74-88-4	Iodomethane	ND	mg / Kg	1	0.025	12/01/00
X00454	XG.2000.1325-8	1634-04-4	Methyl t-butyl ether (MTBE)	ND	mg / Kg	1	0.005	12/01/0
X00454	XG.2000.1326-1	1634-04-4	Methyl t-butyl ether (MTBE)	ND	mg / Kg	1	0.005	12/01
X00454	XG.2000.1325-8	75-09-2	Methylene chloride	ND	mg / Kg	1	0.05	12/01/00
X00454	XG.2000.1326-1	75-09-2	Methylene chloride	ND	mg / Kg	1	0.05	12/01/00
X00454	XG.2000.1325-8	91-20-3	Naphthalene	ND	mg / Kg	1	0.025	12/01/00
X00454	XG.2000.1326-1	91-20-3	Naphthalene	ND	mg / Kg	1	0.025	12/01/00
X00454	XG.2000.1325-8	95-47-6	o-Xylene	ND	mg / Kg	1	0.005	12/01/00
X00454	XG.2000.1326-1	95-47-6	o-Xylene	ND	mg / Kg	1	0.005	12/01/00
X00454	XG.2000.1325-8	108-38-3/106-42	p/m Xylenes	ND	mg / Kg	1	0.01	12/01/00
X00454	XG.2000.1326-1	108-38-3/106-42	p/m Xylenes	ND	mg / Kg	1	0.01	12/01/00
X00454	XG.2000.1325-8	100-42-5	Styrene	ND	mg / Kg	1	0.005	12/01/00
X00454	XG.2000.1326-1	100-42-5	Styrene	ND	mg / Kg	1	0.005	12/01/00
X00454	XG.2000.1325-8	156-60-5	t-1,2 Dichloroethene	ND	mg / Kg	1	0.005	12/01/00
X00454	XG.2000.1326-1	156-60-5	t-1,2 Dichloroethene	ND	mg / Kg	1	0.005	12/01/00
X00454	XG.2000.1325-8	10061-02-6	t-1,3 Dichloropropene	ND	mg / Kg	1	0.005	12/01/00
X00454	XG.2000.1326-1	10061-02-6	t-1,3 Dichloropropene	ND	mg / Kg	1	0.005	12/01/00
X00454	XG.2000.1325-8	127-18-4	Tetrachloroethene	ND	mg / Kg	1	0.005	12/01/00
X00454	XG.2000.1326-1	127-18-4	Tetrachloroethene	ND	mg / Kg	1	0.005	12/01/00
X00454	XG.2000.1325-8	108-88-3	Toluene	ND	mg / Kg	1	0.005	12/01/00
X00454	XG.2000.1326-1	108-88-3	Toluene	ND	mg / Kg	1	0.005	12/01/00
X00454	XG.2000.1325-8	79-01-6	Trichloroethene	ND	mg / Kg	1	0.005	12/01/00
X00454	XG.2000.1326-1	79-01-6	Trichloroethene	ND	mg / Kg	1	0.005	12/01/00
X00454	XG.2000.1325-8	75-69-4	Trichlorofluoromethane	ND	mg / Kg	1	0.025	12/01/00
X00454	XG.2000.1326-1	75-69-4	Trichlorofluoromethane	ND	mg / Kg	1	0.025	12/01/00
X00454	XG.2000.1325-8	108-05-4	Vinyl acetate	ND	mg / Kg	1	0.025	12/01/00
X00454	XG.2000.1326-1	108-05-4	Vinyl acetate	ND	mg / Kg	1	0.025	12/01/

Quality Control Summary

Explanation of codes

D *Not applicable due to sample dilution*
L *Not applicable due to MDL proximity*

Client: **CH2MHILL**
Project: **0011230** **KAFB 160600**

X00454	XG.2000.1325-8	75-01-4	Vinyl chloride	ND	mg / Kg	1	0.025		12/01/00
X00454	XG.2000.1326-1	75-01-4	Vinyl chloride	ND	mg / Kg	1	0.025		12/01/00

QC Type **MS: Matrix Spike** QC Matrix **SOLID**

QC Group	Run Sequence	CAS #	Analyte	Result	Units	Dilution Factor	Detection Limit	Code	Run Date
X00441-008		**SW846 ME/8015A Diesel Range Organics by GC/FID**							
X00441	XG.2000.1276-6		Diesel Range Organics	84	% Recovery	1	NA		11/16/00
X00443-008		**SW846 5030A/8015A GRO by GC/FID**							
X00443	XG.2000.1275-8		Gasoline Range Organics	99	% Recovery	1	NA		11/16/00
X00450-005		**8270**							
X00450	XG.2000.1307-7		1,4-DICHLOROBENZENE CCC	75	% Recovery	1	NA		11/28/00
X00450-005		**SW846 3550A/8270B SVOCs by GC/MS**							
X00450	XG.2000.1307-7	120-82-1	1,2,4-Trichlorobenzene	73	% Recovery	1	NA		11/28/00
X00450	XG.2000.1307-7	121-14-2	2,4-Dinitrotoluene	78	% Recovery	1	NA		11/28/00
X00450	XG.2000.1307-7	95-57-8	2-Chlorophenol	76	% Recovery	1	NA		11/28/00
X00450	XG.2000.1307-7	59-50-7	4-Chloro-3-methylphenol	79	% Recovery	1	NA		11/28/00
X00450	XG.2000.1307-7	100-02-7	4-Nitrophenol	83	% Recovery	1	NA		11/28/00
X00450	XG.2000.1307-7	83-32-9	Acenaphthene	78	% Recovery	1	NA		11/28/00
[illegible]	XG.2000.1307-7	117-84-0	di-n-Octylpthalate	78	% Recovery	1	NA		11/28/00
[illegible]00	XG.2000.1307-7	621-64-7	n-Nitroso-di-n-propylamine	87	% Recovery	1	NA		11/28/00
X00450	XG.2000.1307-7	87-86-5	Pentachlorophenol	85	% Recovery	1	NA		11/28/00
X00450	XG.2000.1307-7	108-95-2	Phenol	70	% Recovery	1	NA		11/28/00
X00450	XG.2000.1307-7	129-00-0	Pyrene	79	% Recovery	1	NA		11/28/00
X00454-013		**SW846 8260A Purgeable VOCs by GC/MS**							
X00454	XG.2000.1313-13	75-34-3	1,1 Dichloroethene	106	% Recovery	1	NA		11/30/00
X00454	XG.2000.1313-13	106-46-7	1,4 Dichlorobenzene	101	% Recovery	1	NA		11/30/00
X00454	XG.2000.1313-13	71-43-2	Benzene	112	% Recovery	1	NA		11/30/00
X00454	XG.2000.1313-13	108-90-7	Chlorobenzene	108	% Recovery	1	NA		11/30/00
X00454	XG.2000.1313-13	108-88-3	Toluene	114	% Recovery	1	NA		11/30/00
X00454	XG.2000.1313-13	79-01-6	Trichloroethene	108	% Recovery	1	NA		11/30/00

QC Type **MSD: Matrix Spike Duplicate Accuracy** QC Matrix **SOLID**

QC Group	Run Sequence	CAS #	Analyte	Result	Units	Dilution Factor	Detection Limit	Code	Run Date
X00441-009		**SW846 ME/8015A Diesel Range Organics by GC/FID**							
X00441	XG.2000.1276-7		Diesel Range Organics	85	% Recovery	1	NA		11/16/00
X00443-009		**SW846 5030A/8015A GRO by GC/FID**							
X00443	XG.2000.1275-9		Gasoline Range Organics	96	% Recovery	1	NA		11/16/00
X00450-006		**8270**							
[illegible]0	XG.2000.1307-8		1,4-DICHLOROBENZENE CCC	76	% Recovery	1	NA		11/28/00

Quality Control Summary

Client: **CH2MHILL**

Project: **0011230** **KAFB 160600**

Explanation of codes

D *Not applicable due to sample dilutic*

L *Not applicable due to MDL proxin*

X00450-006		**SW846 3550A/8270B SVOCs by GC/MS**						
X00450	XG.2000.1307-8	120-82-1	1,2,4-Trichlorobenzene	72	% Recovery	1	NA	11/28/00
X00450	XG.2000.1307-8	121-14-2	2,4-Dinitrotoluene	79	% Recovery	1	NA	11/28/00
X00450	XG.2000.1307-8	95-57-8	2-Chlorophenol	77	% Recovery	1	NA	11/28/00
X00450	XG.2000.1307-8	59-50-7	4-Chloro-3-methylphenol	79	% Recovery	1	NA	11/28/00
X00450	XG.2000.1307-8	100-02-7	4-Nitrophenol	83	% Recovery	1	NA	11/28/00
X00450	XG.2000.1307-8	83-32-9	Acenaphthene	78	% Recovery	1	NA	11/28/00
X00450	XG.2000.1307-8	117-84-0	di-n-Octylpthalate	78	% Recovery	1	NA	11/28/00
X00450	XG.2000.1307-8	621-64-7	n-Nitroso-di-n-propylamine	89	% Recovery	1	NA	11/28/00
X00450	XG.2000.1307-8	87-86-5	Pentachlorophenol	85	% Recovery	1	NA	11/28/00
X00450	XG.2000.1307-8	108-95-2	Phenol	71	% Recovery	1	NA	11/28/00
X00450	XG.2000.1307-8	129-00-0	Pyrene	78	% Recovery	1	NA	11/28/00
X00454-014		**SW846 8260A Purgeable VOCs by GC/MS**						
X00454	XG.2000.1313-14	75-34-3	1,1 Dichloroethene	106	% Recovery	1	NA	11/30/00
X00454	XG.2000.1313-14	106-46-7	1,4 Dichlorobenzene	99	% Recovery	1	NA	11/30/00
X00454	XG.2000.1313-14	71-43-2	Benzene	110	% Recovery	1	NA	11/30/00
X00454	XG.2000.1313-14	108-90-7	Chlorobenzene	105	% Recovery	1	NA	11/30/00
X00454	XG.2000.1313-14	108-88-3	Toluene	112	% Recovery	1	NA	11/30/00
X00454	XG.2000.1313-14	79-01-6	Trichloroethene	106	% Recovery	1	NA	11/30/00

QC Type **MSD: Matrix Spike Duplicate Precision** QC Matrix **SOLID**

QC Group	Run Sequence	CAS #	Analyte	Result	Units	Dilution Factor	Detection Limit	Code	Run Date
X00441-009		**SW846 ME/8015A Diesel Range Organics by GC/FID**							
X00441	XG.2000.1276-7		Diesel Range Organics	1	RPD	1	NA		11/16/00
X00443-009		**SW846 5030A/8015A GRO by GC/FID**							
X00443	XG.2000.1275-9		Gasoline Range Organics	2	RPD	1	NA		11/16/00
X00450-006		**8270**							
X00450	XG.2000.1307-8		1,4-DICHLOROBENZENE CCC	< 1	RPD	1	NA		11/28/00
X00450-006		**SW846 3550A/8270B SVOCs by GC/MS**							
X00450	XG.2000.1307-8	120-82-1	1,2,4-Trichlorobenzene	1	RPD	1	NA		11/28/00
X00450	XG.2000.1307-8	121-14-2	2,4-Dinitrotoluene	< 1	RPD	1	NA		11/28/00
X00450	XG.2000.1307-8	95-57-8	2-Chlorophenol	1	RPD	1	NA		11/28/00
X00450	XG.2000.1307-8	59-50-7	4-Chloro-3-methylphenol	< 1	RPD	1	NA		11/28/00
X00450	XG.2000.1307-8	100-02-7	4-Nitrophenol	< 1	RPD	1	NA		11/28/00
X00450	XG.2000.1307-8	83-32-9	Acenaphthene	< 1	RPD	1	NA		11/28/00
X00450	XG.2000.1307-8	117-84-0	di-n-Octylpthalate	< 1	RPD	1	NA		11/28/00
X00450	XG.2000.1307-8	621-64-7	n-Nitroso-di-n-propylamine	2	RPD	1	NA		11/28/00
X00450	XG.2000.1307-8	87-86-5	Pentachlorophenol	< 1	RPD	1	NA		11/28/00
X00450	XG.2000.1307-8	108-95-2	Phenol	1	RPD	1	NA		11/28/00
X00450	XG.2000.1307-8	129-00-0	Pyrene	< 1	RPD	1	NA		11/28/00
X00454-014		**SW846 8260A Purgeable VOCs by GC/MS**							
X00454	XG.2000.1313-14	75-34-3	1,1 Dichloroethene	< 1	RPD	1	NA		11/30/00
X00454	XG.2000.1313-14	106-46-7	1,4 Dichlorobenzene	2	RPD	1	NA		11/30/00
X00454	XG.2000.1313-14	71-43-2	Benzene	2	RPD	1	NA		11/3

Quality Control Summary

Client: **CH2MHILL**

:ct: **0011230** **KAFB 160600**

Explanation of codes

D *Not applicable due to sample dilution*

L *Not applicable due to MDL proximity*

X00454	XG.2000.1313-14	108-90-7	Chlorobenzene	3	RPD	1	NA	11/30 00
X00454	XG.2000.1313-14	108-88-3	Toluene	2	RPD	1	NA	11/30 00
X00454	XG.2000.1313-14	79-01-6	Trichloroethene	2	RPD	1	NA	11/30 00

Surrogate Summary: QC

Client: CH2MHILL
Project: 0011230 KAFB 160600

QC Type: **LCS** QC Matrix: **SOLID**

QC Group	Run Sequence	CAS #	Analyte	Result	Units	Dilution Factor	Detection Limit	Code	Run Date
X00441-002		DRO							
X00441	XG.2000.1276-2	NA	O-terphenyl	81	% Recovery	1	NA		11/16/00
X00443-002		GRO							
X00443	XG.2000.1275-2	NA	4-Bromofluorobenzene-FID	102	% Recovery	1	NA		11/16/00
X00443	XG.2000.1275-2	NA	4-Bromofluorobenzene-PID	ND	% Recovery	1	NA		11/16/00
X00443	XG.2000.1275-2	NA	aaa-Trifluorotoluene-FID	104	% Recovery	1	NA		11/16/00
X00443	XG.2000.1275-2	NA	aaa-Trifluorotoluene-PID	ND	% Recovery	1	NA		11/16/00
X00450-002		8270							
X00450	XG.2000.1307-4	NA	*2,4,6-TRIBROMOPHENOL	90	% Recovery	1	NA		11/28/00
X00450	XG.2000.1307-4	NA	*2-FLUOROBIPHENYL	83	% Recovery	1	NA		11/28/00
X00450	XG.2000.1307-4	NA	*2-FLUOROPHENOL	72	% Recovery	1	NA		11/28/00
X00450	XG.2000.1307-4	NA	*NITROBENZENE-D5	80	% Recovery	1	NA		11/28/00
X00450	XG.2000.1307-4	NA	*PHENOL-D6	78	% Recovery	1	NA		11/28/00
X00450	XG.2000.1307-4	NA	*TERPHENYL-D14	83	% Recovery	1	NA		11/28/00
X00454-003		8260							
4	XG.2000.1313-3	NA	1,2 Dichloroethane-D4 (SS)	80	% Recovery	1	NA		11/29/00
X00454	XG.2000.1313-3	NA	4-Bromofluorobenzene (SS)	94	% Recovery	1	NA		11/29/00
X00454	XG.2000.1313-3	NA	Dibromofluoromethane (SS)	98	% Recovery	1	NA		11/29/00
X00454	XG.2000.1313-3	NA	Toluene-D8 (SS)	100	% Recovery	1	NA		11/29/00

QC Type: **LCSD** QC Matrix: **SOLID**

QC Group	Run Sequence	CAS #	Analyte	Result	Units	Dilution Factor	Detection Limit	Code	Run Date
X00441-003		DRO							
X00441	XG.2000.1276-3	NA	O-terphenyl	79	% Recovery	1	NA		11/16/00
X00443-003		GRO							
X00443	XG.2000.1275-3	NA	4-Bromofluorobenzene-FID	102	% Recovery	1	NA		11/16/00
X00443	XG.2000.1275-3	NA	4-Bromofluorobenzene-PID	664	% Recovery	1	NA		11/16/00
X00443	XG.2000.1275-3	NA	aaa-Trifluorotoluene-FID	104	% Recovery	1	NA		11/16/00
X00443	XG.2000.1275-3	NA	aaa-Trifluorotoluene-PID	862	% Recovery	1	NA		11/16/00
X00450-003		8270							
X00450	XG.2000.1307-5	NA	*2,4,6-TRIBROMOPHENOL	90	% Recovery	1	NA		11/28/00
X00450	XG.2000.1307-5	NA	*2-FLUOROBIPHENYL	84	% Recovery	1	NA		11/28/00
X00450	XG.2000.1307-5	NA	*2-FLUOROPHENOL	75	% Recovery	1	NA		11/28/00
X00450	XG.2000.1307-5	NA	*NITROBENZENE-D5	79	% Recovery	1	NA		11/28/00
X00450	XG.2000.1307-5	NA	*PHENOL-D6	80	% Recovery	1	NA		11/28/00
X00450	XG.2000.1307-5	NA	*TERPHENYL-D14	83	% Recovery	1	NA		11/28/00

Surrogate Summary: QC

RECEIVED DEC

Client: CH2MHILL
Project: 0011230 KAFB 160600

X00454-004		8260							
X00454	XG.2000.1313-4	NA	1,2 Dichloroethane-D4 (SS)	85	% Recovery	1	NA		11/29/00
X00454	XG.2000.1313-4	NA	4-Bromofluorobenzene (SS)	97	% Recovery	1	NA		11/29/00
X00454	XG.2000.1313-4	NA	Dibromofluoromethane (SS)	98	% Recovery	1	NA		11/29/00
X00454	XG.2000.1313-4	NA	Toluene-D8 (SS)	100	% Recovery	1	NA		11/29/00

QC Type **MB** QC Matrix **SOLID**

QC Group	Run Sequence	CAS #	Analyte	Result	Units	Dilution Factor	Detection Limit	Code	Run Date
X00441-001		DRO							
X00441	XG.2000.1276-1	NA	O-terphenyl	73	% Recovery	1	NA		11/16/00
X00441-006		DRO							
X00441	XG.2000.1276-4	NA	O-terphenyl	71	% Recovery	1	NA		11/16/00
X00441-016		DRO							
X00441	XG.2000.1287-1	NA	O-terphenyl	75	% Recovery	1	NA		11/18/00
X00441-019		DRO							
X00441	XG.2000.1306-1	NA	O-terphenyl	91	% Recovery	1	NA		11/28/00
X00441-025		DRO							
X00441	XG.2000.1311-1	NA	O-terphenyl	92	% Recovery	1	NA		11/29
X00443-001		GRO							
X00443	XG.2000.1275-1	NA	4-Bromofluorobenzene-FID	90	% Recovery	1	NA		11/16/00
X00443	XG.2000.1275-1	NA	4-Bromofluorobenzene-PID	ND	% Recovery	1	NA		11/16/00
X00443	XG.2000.1275-1	NA	aaa-Trifluorotoluene-FID	101	% Recovery	1	NA		11/16/00
X00443	XG.2000.1275-1	NA	aaa-Trifluorotoluene-PID	10	% Recovery	1	NA		11/16/00
X00443-013		GRO							
X00443	XG.2000.1286-1	NA	4-Bromofluorobenzene-FID	90	% Recovery	1	NA		11/18/00
X00443	XG.2000.1286-1	NA	4-Bromofluorobenzene-PID	ND	% Recovery	1	NA		11/18/00
X00443	XG.2000.1286-1	NA	aaa-Trifluorotoluene-FID	102	% Recovery	1	NA		11/18/00
X00443	XG.2000.1286-1	NA	aaa-Trifluorotoluene-PID	ND	% Recovery	1	NA		11/18/00
X00443-016		GRO							
X00443	XG.2000.1305-1	NA	4-Bromofluorobenzene-FID	83	% Recovery	1	NA		11/28/00
X00443	XG.2000.1305-1	NA	4-Bromofluorobenzene-PID	ND	% Recovery	1	NA		11/28/00
X00443	XG.2000.1305-1	NA	aaa-Trifluorotoluene-FID	100	% Recovery	1	NA		11/28/00
X00443	XG.2000.1305-1	NA	aaa-Trifluorotoluene-PID	ND	% Recovery	1	NA		11/28/00
X00443-022		GRO							
X00443	XG.2000.1310-1	NA	4-Bromofluorobenzene-FID	82	% Recovery	1	NA		11/29/00
X00443	XG.2000.1310-1	NA	4-Bromofluorobenzene-PID	ND	% Recovery	1	NA		11/29/00
X00443	XG.2000.1310-1	NA	aaa-Trifluorotoluene-FID	100	% Recovery	1	NA		11/29/00
X00443	XG.2000.1310-1	NA	aaa-Trifluorotoluene-PID	8	% Recovery	1	NA		11/29/00
X00450-001		8270							
X00450	XG.2000.1307-3	NA	*2,4,6-TRIBROMOPHENOL	79	% Recovery	1	NA		11/28/00
X00450	XG.2000.1318-3	NA	*2,4,6-TRIBROMOPHENOL	79	% Recovery	1	NA		11/28
X00450	XG.2000.1307-3	NA	*2-FLUOROBIPHENYL	72	% Recovery	1	NA		11/28/00

Surrogate Summary: QC

Client: **CH2MHILL**

Project: **0011230** **KAFB 160600**

X00450	XG.2000.1318-3	NA	*2-FLUOROBIPHENYL	72	% Recovery	1	NA	11/28/00
X00450	XG.2000.1307-3	NA	*2-FLUOROPHENOL	63	% Recovery	1	NA	11/28/00
X00450	XG.2000.1318-3	NA	*2-FLUOROPHENOL	63	% Recovery	1	NA	11/28/00
X00450	XG.2000.1307-3	NA	*NITROBENZENE-D5	69	% Recovery	1	NA	11/28/00
X00450	XG.2000.1318-3	NA	*NITROBENZENE-D5	69	% Recovery	1	NA	11/28/00
X00450	XG.2000.1307-3	NA	*PHENOL-D6	69	% Recovery	1	NA	11/28/00
X00450	XG.2000.1318-3	NA	*PHENOL-D6	69	% Recovery	1	NA	11/28/00
X00450	XG.2000.1307-3	NA	*TERPHENYL-D14	74	% Recovery	1	NA	11/28/00
X00450	XG.2000.1318-3	NA	*TERPHENYL-D14	74	% Recovery	1	NA	11/28/00
X00450-007		**8270**						
X00450	XG.2000.1331-1	NA	*2,4,6-TRIBROMOPHENOL	56	% Recovery	1	NA	12/01/00
X00450	XG.2000.1338-1	NA	*2,4,6-TRIBROMOPHENOL	56	% Recovery	1	NA	12/01/00
X00450	XG.2000.1331-1	NA	*2-FLUOROBIPHENYL	54	% Recovery	1	NA	12/01/00
X00450	XG.2000.1338-1	NA	*2-FLUOROBIPHENYL	54	% Recovery	1	NA	12/01/00
X00450	XG.2000.1331-1	NA	*2-FLUOROPHENOL	54	% Recovery	1	NA	12/01/00
X00450	XG.2000.1338-1	NA	*2-FLUOROPHENOL	54	% Recovery	1	NA	12/01/00
X00450	XG.2000.1331-1	NA	*NITROBENZENE-D5	56	% Recovery	1	NA	12/01/00
X00450	XG.2000.1338-1	NA	*NITROBENZENE-D5	56	% Recovery	1	NA	12/01/00
X00450	XG.2000.1331-1	NA	*PHENOL-D6	59	% Recovery	1	NA	12/01/00
X00450	XG.2000.1338-1	NA	*PHENOL-D6	59	% Recovery	1	NA	12/01/00
X00450	XG.2000.1331-1	NA	*TERPHENYL-D14	65	% Recovery	1	NA	12/01/00
X00450	XG.2000.1338-1	NA	*TERPHENYL-D14	65	% Recovery	1	NA	12/01/00
54-001		**8260**						
X00454	XG.2000.1313-1	NA	1,2 Dichloroethane-D4 (SS)	86	% Recovery	1	NA	11/29/00
X00454	XG.2000.1313-1	NA	4-Bromofluorobenzene (SS)	98	% Recovery	1	NA	11/29/00
X00454	XG.2000.1313-1	NA	Dibromofluoromethane (SS)	98	% Recovery	1	NA	11/29/00
X00454	XG.2000.1313-1	NA	Toluene-D8 (SS)	102	% Recovery	1	NA	11/29/00
X00454-010		**8260**						
X00454	XG.2000.1313-10	NA	1,2 Dichloroethane-D4 (SS)	95	% Recovery	1	NA	11/30/00
X00454	XG.2000.1313-10	NA	4-Bromofluorobenzene (SS)	102	% Recovery	1	NA	11/30/00
X00454	XG.2000.1313-10	NA	Dibromofluoromethane (SS)	99	% Recovery	1	NA	11/30/00
X00454	XG.2000.1313-10	NA	Toluene-D8 (SS)	101	% Recovery	1	NA	11/30/00
X00454-018		**8260**						
X00454	XG.2000.1325-8	NA	1,2 Dichloroethane-D4 (SS)	85	% Recovery	1	NA	12/01/00
X00454	XG.2000.1326-1	NA	1,2 Dichloroethane-D4 (SS)	85	% Recovery	1	NA	12/01/00
X00454	XG.2000.1325-8	NA	4-Bromofluorobenzene (SS)	95	% Recovery	1	NA	12/01/00
X00454	XG.2000.1326-1	NA	4-Bromofluorobenzene (SS)	95	% Recovery	1	NA	12/01/00
X00454	XG.2000.1325-8	NA	Dibromofluoromethane (SS)	99	% Recovery	1	NA	12/01/00
X00454	XG.2000.1326-1	NA	Dibromofluoromethane (SS)	99	% Recovery	1	NA	12/01/00
X00454	XG.2000.1325-8	NA	Toluene-D8 (SS)	102	% Recovery	1	NA	12/01/00
X00454	XG.2000.1326-1	NA	Toluene-D8 (SS)	102	% Recovery	1	NA	12/01/00

Surrogate Summary: QC

Client: **CH2MHILL**

Project: **0011230** **KAFB 160600**

QC Type **MS** QC Matrix **SOLID**

QC Group	Run Sequence	CAS #	Analyte	Result	Units	Dilution Factor	Detection Limit	Code	Run Date
X00441-008		DRO							
X00441	XG.2000.1276-6	NA	O-terphenyl	79	% Recovery	1	NA		11/16/00
X00443-008		GRO							
X00443	XG.2000.1275-8	NA	4-Bromofluorobenzene-FID	102	% Recovery	1	NA		11/16/00
X00443	XG.2000.1275-8	NA	4-Bromofluorobenzene-PID	ND	% Recovery	1	NA		11/16/00
X00443	XG.2000.1275-8	NA	aaa-Trifluorotoluene-FID	104	% Recovery	1	NA		11/16/00
X00443	XG.2000.1275-8	NA	aaa-Trifluorotoluene-PID	ND	% Recovery	1	NA		11/16/00
X00450-005		8270							
X00450	XG.2000.1307-7	NA	*2,4,6-TRIBROMOPHENOL	90	% Recovery	1	NA		11/28/00
X00450	XG.2000.1307-7	NA	*2-FLUOROBIPHENYL	86	% Recovery	1	NA		11/28/00
X00450	XG.2000.1307-7	NA	*2-FLUOROPHENOL	76	% Recovery	1	NA		11/28/00
X00450	XG.2000.1307-7	NA	*NITROBENZENE-D5	82	% Recovery	1	NA		11/28/00
X00450	XG.2000.1307-7	NA	*PHENOL-D6	81	% Recovery	1	NA		11/28/00
X00450	XG.2000.1307-7	NA	*TERPHENYL-D14	84	% Recovery	1	NA		11/28/00
X00454-013		8260							
X00454	XG.2000.1313-13	NA	1,2 Dichloroethane-D4 (SS)	97	% Recovery	1	NA		11/30
X00454	XG.2000.1313-13	NA	4-Bromofluorobenzene (SS)	99	% Recovery	1	NA		11/30
X00454	XG.2000.1313-13	NA	Dibromofluoromethane (SS)	100	% Recovery	1	NA		11/30/00
X00454	XG.2000.1313-13	NA	Toluene-D8 (SS)	100	% Recovery	1	NA		11/30/00

QC Type **MSD** QC Matrix **SOLID**

QC Group	Run Sequence	CAS #	Analyte	Result	Units	Dilution Factor	Detection Limit	Code	Run Date
X00441-009		DRO							
X00441	XG.2000.1276-7	NA	O-terphenyl	79	% Recovery	1	NA		11/16/00
X00443-009		GRO							
X00443	XG.2000.1275-9	NA	4-Bromofluorobenzene-FID	102	% Recovery	1	NA		11/16/00
X00443	XG.2000.1275-9	NA	4-Bromofluorobenzene-PID	ND	% Recovery	1	NA		11/16/00
X00443	XG.2000.1275-9	NA	aaa-Trifluorotoluene-FID	103	% Recovery	1	NA		11/16/00
X00443	XG.2000.1275-9	NA	aaa-Trifluorotoluene-PID	315	% Recovery	1	NA		11/16/00
X00450-006		8270							
X00450	XG.2000.1307-8	NA	*2,4,6-TRIBROMOPHENOL	89	% Recovery	1	NA		11/28/00
X00450	XG.2000.1307-8	NA	*2-FLUOROBIPHENYL	84	% Recovery	1	NA		11/28/00
X00450	XG.2000.1307-8	NA	*2-FLUOROPHENOL	76	% Recovery	1	NA		11/28/00
X00450	XG.2000.1307-8	NA	*NITROBENZENE-D5	81	% Recovery	1	NA		11/28/00
X00450	XG.2000.1307-8	NA	*PHENOL-D6	80	% Recovery	1	NA		11/28/00
X00450	XG.2000.1307-8	NA	*TERPHENYL-D14	82	% Recovery	1	NA		11/28/00

Surrogate Summary: QC

Client: CH2MHILL

Project: 0011230 KAFB 160600

X00454-014		**8260**						
X00454	XG.2000.1313-14	NA	1,2 Dichloroethane-D4 (SS)	99	% Recovery	1	NA	11/30/00
X00454	XG.2000.1313-14	NA	4-Bromofluorobenzene (SS)	98	% Recovery	1	NA	11/30/00
X00454	XG.2000.1313-14	NA	Dibromofluoromethane (SS)	100	% Recovery	1	NA	11/30/00
X00454	XG.2000.1313-14	NA	Toluene-D8 (SS)	101	% Recovery	1	NA	11/30/00

Surrogate Summary: Fraction

t: CH2MHILL
Project: 0011230 KAFB 160600

Client Sample ID **SB-29-90'** Sample Matrix **SOIL**

QC Group	Run Sequence	CAS #	Analyte	Result	Units	Dilution Factor	Detection Limit	Code	Run Date
0011230-01A		GRO							**X00443-017**
X00443	XG.2000.1305-2	NA	4-Bromofluorobenzene-FID	87	% Recovery	1	NA		11/28/00
X00443	XG.2000.1305-2	NA	4-Bromofluorobenzene-PID	ND	% Recovery	1	NA		11/28/00
X00443	XG.2000.1305-2	NA	aaa-Trifluorotoluene-FID	103	% Recovery	1	NA		11/28/00
X00443	XG.2000.1305-2	NA	aaa-Trifluorotoluene-PID	ND	% Recovery	1	NA		11/28/00
0011230-01B		DRO							**X00441-020**
X00441	XG.2000.1306-2	NA	O-terphenyl	90	% Recovery	1	NA		11/28/00

Client Sample ID **SB-29-100'** Sample Matrix **SOIL**

QC Group	Run Sequence	CAS #	Analyte	Result	Units	Dilution Factor	Detection Limit	Code	Run Date
0011230-02A		GRO							**X00443-018**
X00443	XG.2000.1305-3	NA	4-Bromofluorobenzene-FID	88	% Recovery	1	NA		11/28/00
X00443	XG.2000.1305-3	NA	4-Bromofluorobenzene-PID	ND	% Recovery	1	NA		11/28/00
X00443	XG.2000.1305-3	NA	aaa-Trifluorotoluene-FID	101	% Recovery	1	NA		11/28/00
X00443	XG.2000.1305-3	NA	aaa-Trifluorotoluene-PID	ND	% Recovery	1	NA		11/28/00
0011230-02B		DRO							**X00441-021**
X00441	XG.2000.1306-3	NA	O-terphenyl	89	% Recovery	1	NA		11/28/00

Client Sample ID **SB-29-110'** Sample Matrix **SOIL**

QC Group	Run Sequence	CAS #	Analyte	Result	Units	Dilution Factor	Detection Limit	Code	Run Date
0011230-03A		GRO							**X00443-019**
X00443	XG.2000.1305-4	NA	4-Bromofluorobenzene-FID	86	% Recovery	1	NA		11/29/00
X00443	XG.2000.1305-4	NA	4-Bromofluorobenzene-PID	ND	% Recovery	1	NA		11/29/00
X00443	XG.2000.1305-4	NA	aaa-Trifluorotoluene-FID	102	% Recovery	1	NA		11/29/00
X00443	XG.2000.1305-4	NA	aaa-Trifluorotoluene-PID	ND	% Recovery	1	NA		11/29/00
0011230-03B		DRO							**X00441-022**
X00441	XG.2000.1306-4	NA	O-terphenyl	87	% Recovery	1	NA		11/29/00
0011230-03C		8260							**X00454-009**
X00454	XG.2000.1313-9	NA	1,2 Dichloroethane-D4 (SS)	96	% Recovery	1	NA		11/29/00
X00454	XG.2000.1313-9	NA	4-Bromofluorobenzene (SS)	100	% Recovery	1	NA		11/29/00
X00454	XG.2000.1313-9	NA	Dibromofluoromethane (SS)	93	% Recovery	1	NA		11/29/00
X00454	XG.2000.1313-9	NA	Toluene-D8 (SS)	100	% Recovery	1	NA		11/29/00
1230-03D		8270							**X00450-008**
X00450	XG.2000.1331-2	NA	*2,4,6-TRIBROMOPHENOL	77	% Recovery	1	NA		12/01/00

Surrogate Summary: Fraction

Client: **CH2MHILL**

Project: **0011230** **KAFB 160600**

X00450	XG.2000.1338-2	NA	*2,4,6-TRIBROMOPHENOL	77	% Recovery	1	NA	12/01/00
X00450	XG.2000.1331-2	NA	*2-FLUOROBIPHENYL	71	% Recovery	1	NA	12/01/00
X00450	XG.2000.1338-2	NA	*2-FLUOROBIPHENYL	71	% Recovery	1	NA	12/01/00
X00450	XG.2000.1331-2	NA	*2-FLUOROPHENOL	66	% Recovery	1	NA	12/01/00
X00450	XG.2000.1338-2	NA	*2-FLUOROPHENOL	66	% Recovery	1	NA	12/01/00
X00450	XG.2000.1331-2	NA	*NITROBENZENE-D5	69	% Recovery	1	NA	12/01/00
X00450	XG.2000.1338-2	NA	*NITROBENZENE-D5	69	% Recovery	1	NA	12/01/00
X00450	XG.2000.1331-2	NA	*PHENOL-D6	71	% Recovery	1	NA	12/01/00
X00450	XG.2000.1338-2	NA	*PHENOL-D6	71	% Recovery	1	NA	12/01/00
X00450	XG.2000.1331-2	NA	*TERPHENYL-D14	77	% Recovery	1	NA	12/01/00
X00450	XG.2000.1338-2	NA	*TERPHENYL-D14	77	% Recovery	1	NA	12/01/00

Client Sample ID **SB-29-120'** Sample Matrix **SOIL**

QC Group	Run Sequence	CAS #	Analyte	Result	Units	Dilution Factor	Detection Limit	Code	Run Date
0011230-04A		GRO							**X00443-020**
X00443	XG.2000.1305-5	NA	4-Bromofluorobenzene-FID	89	% Recovery	1	NA		11/29/00
X00443	XG.2000.1305-5	NA	4-Bromofluorobenzene-PID	ND	% Recovery	1	NA		11/29/00
X00443	XG.2000.1305-5	NA	aaa-Trifluorotoluene-FID	104	% Recovery	1	NA		11/29/00
X00443	XG.2000.1305-5	NA	aaa-Trifluorotoluene-PID	ND	% Recovery	1	NA		11/29/00
0011230-04B		DRO							**X00441**
X00441	XG.2000.1306-5	NA	O-terphenyl	87	% Recovery	1	NA		11/29/00

Client Sample ID **SB-29-130'** Sample Matrix **SOIL**

QC Group	Run Sequence	CAS #	Analyte	Result	Units	Dilution Factor	Detection Limit	Code	Run Date
0011230-05A		GRO							**X00443-021**
X00443	XG.2000.1305-6	NA	4-Bromofluorobenzene-FID	86	% Recovery	1	NA		11/29/00
X00443	XG.2000.1305-6	NA	4-Bromofluorobenzene-PID	ND	% Recovery	1	NA		11/29/00
X00443	XG.2000.1305-6	NA	aaa-Trifluorotoluene-FID	102	% Recovery	1	NA		11/29/00
X00443	XG.2000.1305-6	NA	aaa-Trifluorotoluene-PID	ND	% Recovery	1	NA		11/29/00
0011230-05B		DRO							**X00441-024**
X00441	XG.2000.1306-6	NA	O-terphenyl	86	% Recovery	1	NA		11/29/00

A[illegible]GAI
ANALYTICAL
LABORATORIES, INC.

Chain of Custody Record

7300 JEFFERSON N.E.
ALBUQUERQUE, NEW MEXICO 8710[illegible]
(505) 345-8964

3332 WEDGEWOOD
EL PASO, TEXAS 79925
(915) 593-6000

127 EASTGATE DRIVE, 212-C
LOS ALAMOS, NEW MEXICO 87544
(505) 662-2558

Lab job No.: 11230 Date 11/28/00

Page 1 of 1

Client: CH2M HILL

Address: 6001 [illegible] #350

City / State / Zip: ABQ NM

Project Name / Number: KAFB 160660

Contract / Purchase Order / Quote:

Project Manager / Contact: HALLORAN/LeFevre

Telephone No.: 884 5600

Fax No.: 883 7507

Samplers: (signature) [illegible]

Analysis Required

AAL Fraction Number	Field Sample Number / Location	Date	Time	Sample Type	Type / Size of Container	Preservation Temp.	Preservation Chemical	No. of Containers	GRO	DRO	VOC	SVOC	BTEX						Remarks
	SB-29-90'	11/28	0900	Soil	4oz	ice	NO	2	X	X									
	SB-29-100'	11/28	0950	Soil	4oz	ice	NO	2	X	X									
	SB-29-110'	11/28	0920	Soil	4oz	ice	NO	4	X	X	X	X							
	SB-29-120'	11/28	1005	Soil	4oz	ice	NO	2	X	X									
	SB-29-130'	11/28	1155	Soil	4oz	ice	NO	2	X	X									

RECEIVED DEC 2 2000

Relinquished by:	Date	Received by:	Relinquished by:	Date	Received by:
Signature [illegible]	11/28	Signature [illegible]	Signature		Signature
Printed [illegible] LeFevre	Time [illegible]	Printed [illegible]	Printed	Time	Printed
Company CH2M HILL		Company AAL	Company		Company
Reason [illegible]		Reason [illegible]	Reason		Reason

Method of Shipment:

Shipment No.

Special Instructions:

Comments: [illegible] DRO [illegible] Bill [illegible] 11/28/00 [illegible]

After analysis, samples are to be:

- ☐ Disposed of (additional fee)
- ☐ Stored (30 days max)
- ☐ Stored over 30 days (additional fee)
- ☐ Returned to customer

COURIER

ASSAIGAI
ANALYTICAL
LABORATORIES, INC.

7300 Jefferson, NE • Albuquerque, New Mexico 87109 • (505) 345-8964 • FAX (505) 345-7259
3332 Wedgewood Dr., Suite N • El Paso, Texas 79925 • (915) 593-6000 • FAX (915) 593-7820
127 Eastgate Drive, 212-C • Los Alamos, New Mexico 87544 • (505) 662-255

RECEIVED DEC 1 2 2000

Explanation of codes

B	analyte detected in Method Blank
E	result is estimated
H	analyzed out of hold time
N	tentatively identified compound
S	subcontracted
1-9	see footnote

CH2MHILL
attn: AMY HALLORAN
6001 INDIAN SCHOOL RD NE STE 350
ALBUQUERQUE, NM 87110-4140

Assaigai Analytical Laboratories, Inc.

Certificate of Analysis

Client: CH2MHILL
Project: 0011249 KAFB 160660 (TO 10)

William P. Biava: President of Assaigai Analytical Laboratories, Inc.

Client Sample ID: ***SB-29 160'*** Sample Matrix: ***SOIL*** Sample Collected: ***11/28/00 15:30:00***

QC Group	Run Sequence	CAS #	Analyte	Result	Units	Dilution Factor	Detection Limit	Code	Run Date
0011249-01A		**SW846 5030A/8015A GRO by GC/FID**							
X00443	XG.2000.1310-2		Gasoline Range Organics	ND	mg / Kg	1	0.25		11/29/00
0011249-01B		**SW846 ME/8015A Diesel Range Organics by GC/FID**							
X00441	XG.2000.1311-2		Diesel Range Organics	ND	mg / Kg	1	25		11/29/00
0011249-01C		**SW846 5030A/8021B Purgeable VOCs by GC/PID**							
X00448	XG.2000.1312-2	71-43-2	Benzene	ND	mg / Kg	1	0.005		11/30/00
X00448	XG.2000.1312-2	100-41-4	Ethylbenzene	ND	mg / Kg	1	0.005		11/30/00
X00448	XG.2000.1312-2	95-47-6	o-Xylene	ND	mg / Kg	1	0.005		11/30/00
X00448	XG.2000.1312-2	108-38-3/106-42	p/m-Xylenes	ND	mg / Kg	1	0.01		11/30/00
X00448	XG.2000.1312-2	108-88-3	Toluene	ND	mg / Kg	1	0.005		11/30/00

Client Sample ID: ***SB-29 170'*** Sample Matrix: ***SOIL*** Sample Collected: ***11/28/00 16:20:00***

QC Group	Run Sequence	CAS #	Analyte	Result	Units	Dilution Factor	Detection Limit	Code	Run Date
0011249-02A		**SW846 5030A/8015A GRO by GC/FID**							
X00443	XG.2000.1310-3		Gasoline Range Organics	ND	mg / Kg	1	0.25		11/29/00

REPRODUCTION OF THIS REPORT IN LESS THAN FULL REQUIRES THE WRITTEN CONSENT OF AAL
THIS REPORT MAY NOT BE USED IN ANY MANNER BY THE CLIENT OR ANY OTHER PERSON OR ENTITY
WITHOUT CLEAR AND SPECIFIC ANY ACCREDITATION PROGRAM

Certificate of Analysis

Client: **CH2MHILL**

Project: **0011249** **KAFB 160660 (TO 10)**

0011249-02B **SW846 ME/8015A Diesel Range Organics by GC/FID**

X00441	XG.2000.1311-3		Diesel Range Organics	ND	mg / Kg	1	25	11/29/0(

0011249-02C **SW846 8260A Purgeable VOCs by GC/MS**

X00454	XG.2000.1313-12	75-34-3	1,1 Dichloroethane	ND	mg / Kg	1	0.005	11/30/0(
X00454	XG.2000.1313-12	75-34-3	1,1 Dichloroethene	ND	mg / Kg	1	0.005	11/30/0(
X00454	XG.2000.1313-12	71-55-6	1,1,1 Trichloroethane	ND	mg / Kg	1	0.005	11/30/0(
X00454	XG.2000.1313-12	630-20-6	1,1,1,2 Tetrachloroethane	ND	mg / Kg	1	0.005	11/30/0(
X00454	XG.2000.1313-12	79-00-5	1,1,2 Trichloroethane	ND	mg / Kg	1	0.005	11/30/0(
X00454	XG.2000.1313-12	79-34-5	1,1,2,2 Tetrachloroethane	ND	mg / Kg	1	0.005	11/30/0(
X00454	XG.2000.1313-12	106-93-4	1,2 Dibromoethane (EDB)	ND	mg / Kg	1	0.005	11/30/0(
X00454	XG.2000.1313-12	95-50-1	1,2 Dichlorobenzene	ND	mg / Kg	1	0.005	11/30/0(
X00454	XG.2000.1313-12	107-06-2	1,2 Dichloroethane	ND	mg / Kg	1	0.005	11/30/0(
X00454	XG.2000.1313-12	78-87-5	1,2 Dichloropropane	ND	mg / Kg	1	0.005	11/30/0(
X00454	XG.2000.1313-12	96-18-4	1,2,3 Trichloropropane	ND	mg / Kg	1	0.005	11/30/0(
X00454	XG.2000.1313-12	95-63-6	1,2,4-Trimethylbenzene	ND	mg / Kg	1	0.005	11/30/0(
X00454	XG.2000.1313-12	541-73-1	1,3 Dichlorobenzene	ND	mg / Kg	1	0.005	11/30/0(
X00454	XG.2000.1313-12	108-67-8	1,3,5-Trimethylbenzene	ND	mg / Kg	1	0.005	11/30/0(
X00454	XG.2000.1313-12	764-41-0	1,4 Dichloro-2-butene	ND	mg / Kg	1	0.05	11/30/0(
X00454	XG.2000.1313-12	106-46-7	1,4 Dichlorobenzene	ND	mg / Kg	1	0.005	11/30/0(
X00454	XG.2000.1313-12	78-93-3	2-Butanone (MEK)	ND	mg / Kg	1	0.025	11/30/0(
X00454	XG.2000.1313-12	110-75-8	2-Chloroethylvinylether	ND	mg / Kg	1	0.025	11/30/0(
X00454	XG.2000.1313-12	591-78-6	2-Hexanone (MBK)	ND	mg / Kg	1	0.025	11/30
X00454	XG.2000.1313-12	108-10-1	4-Methyl-2-pentanone (MIBK)	ND	mg / Kg	1	0.025	11/30/0(
X00454	XG.2000.1313-12	67-64-1	Acetone	0.068	mg / Kg	1	0.05	11/30/0(
X00454	XG.2000.1313-12	107-02-8	Acrolein	ND	mg / Kg	1	0.1	11/30/0(
X00454	XG.2000.1313-12	107-13-1	Acrylonitrile	ND	mg / Kg	1	0.1	11/30/0(
X00454	XG.2000.1313-12	71-43-2	Benzene	ND	mg / Kg	1	0.005	11/30/00
X00454	XG.2000.1313-12	75-27-4	Bromodichloromethane	ND	mg / Kg	1	0.005	11/30/00
X00454	XG.2000.1313-12	75-25-2	Bromoform	ND	mg / Kg	1	0.005	11/30/00
X00454	XG.2000.1313-12	74-83-9	Bromomethane	ND	mg / Kg	1	0.025	11/30/00
X00454	XG.2000.1313-12	75-15-0	Carbon disulfide	ND	mg / Kg	1	0.025	11/30/00
X00454	XG.2000.1313-12	56-23-5	Carbon tetrachloride	ND	mg / Kg	1	0.005	11/30/00
X00454	XG.2000.1313-12	108-90-7	Chlorobenzene	ND	mg / Kg	1	0.005	11/30/00
X00454	XG.2000.1313-12	124-48-1	Chlorodibromomethane	ND	mg / Kg	1	0.005	11/30/00
X00454	XG.2000.1313-12	75-00-3	Chloroethane	ND	mg / Kg	1	0.025	11/30/00
X00454	XG.2000.1313-12	67-66-3	Chloroform	ND	mg / Kg	1	0.005	11/30/00
X00454	XG.2000.1313-12	74-87-3	Chloromethane	ND	mg / Kg	1	0.025	11/30/00
X00454	XG.2000.1313-12	156-59-2	cis-1,2 dichloroethene	ND	mg / Kg	1	0.005	11/30/00
X00454	XG.2000.1313-12	10061-01-5	cis-1,3 dichloropropene	ND	mg / Kg	1	0.005	11/30/00
X00454	XG.2000.1313-12	74-95-3	Dibromomethane	ND	mg / Kg	1	0.005	11/30/00
X00454	XG.2000.1313-12	97-63-2	Ethyl methacrylate	ND	mg / Kg	1	0.025	11/30/00
X00454	XG.2000.1313-12	100-41-4	Ethylbenzene	ND	mg / Kg	1	0.005	11/30/00
X00454	XG.2000.1313-12		Freon 113	ND	mg / Kg	1	0.025	11/30/00
X00454	XG.2000.1313-12	75-71-8	Freon 12	ND	mg / Kg	1	0.05	11/30/00
X00454	XG.2000.1313-12	74-88-4	Iodomethane	ND	mg / Kg	1	0.025	11/30/00
X00454	XG.2000.1313-12	1634-04-4	Methyl t-butyl ether (MTBE)	ND	mg / Kg	1	0.005	11/30/00
X00454	XG.2000.1313-12	75-09-2	Methylene chloride	ND	mg / Kg	1	0.05	11/30/0

Certificate of Analysis

.t: **CH2MHILL**

Project: **0011249** **KAFB 160660 (TO 10)**

X00454	XG.2000.1313-12	91-20-3	Naphthalene	ND	mg / Kg	1	0.025		11/30/00
X00454	XG.2000.1313-12	95-47-6	o-Xylene	ND	mg / Kg	1	0.005		11/30/00
X00454	XG.2000.1313-12	108-38-3/106-42	p/m Xylenes	ND	mg / Kg	1	0.01		11/30/00
X00454	XG.2000.1313-12	100-42-5	Styrene	ND	mg / Kg	1	0.005		11/30/00
X00454	XG.2000.1313-12	156-60-5	t-1,2 Dichloroethene	ND	mg / Kg	1	0.005		11/30/00
X00454	XG.2000.1313-12	10061-02-6	t-1,3 Dichloropropene	ND	mg / Kg	1	0.005		11/30/00
X00454	XG.2000.1313-12	127-18-4	Tetrachloroethene	ND	mg / Kg	1	0.005		11/30/00
X00454	XG.2000.1313-12	108-88-3	Toluene	ND	mg / Kg	1	0.005		11/30/00
X00454	XG.2000.1313-12	79-01-6	Trichloroethene	ND	mg / Kg	1	0.005		11/30/00
X00454	XG.2000.1313-12	75-69-4	Trichlorofluoromethane	ND	mg / Kg	1	0.025		11/30/00
X00454	XG.2000.1313-12	108-05-4	Vinyl acetate	ND	mg / Kg	1	0.025		11/30/00
X00454	XG.2000.1313-12	75-01-4	Vinyl chloride	ND	mg / Kg	1	0.025		11/30/00

Client Sample ID ***SB-29 210'*** Sample Matrix ***SOIL*** Sample Collected ***11/29/00 10:35:00***

QC Group	Run Sequence	CAS #	Analyte	Result	Units	Dilution Factor	Detection Limit	Code	Run Date
0011249-03A		**SW846 5030A/8015A GRO by GC/FID**							
X00443	XG.2000.1310-4		Gasoline Range Organics	ND	mg / Kg	1	0.25		11/29/00
.249-03B		**SW846 ME/8015A Diesel Range Organics by GC/FID**							
X00441	XG.2000.1311-4		Diesel Range Organics	ND	mg / Kg	1	25		11/29/00

Client Sample ID ***SB-29 220'*** Sample Matrix ***SOIL*** Sample Collected ***11/29/00 11:15:00***

QC Group	Run Sequence	CAS #	Analyte	Result	Units	Dilution Factor	Detection Limit	Code	Run Date
0011249-04A		**SW846 5030A/8015A GRO by GC/FID**							
X00443	XG.2000.1310-5		Gasoline Range Organics	ND	mg / Kg	1	0.25		11/29/00
0011249-04B		**SW846 ME/8015A Diesel Range Organics by GC/FID**							
X00441	XG.2000.1311-5		Diesel Range Organics	ND	mg / Kg	1	25		11/29/00
0011249-04C		**SW846 5030A/8021B Purgeable VOCs by GC/PID**							
X00448	XG.2000.1312-3	71-43-2	Benzene	ND	mg / Kg	1	0.005		11/30/00
X00448	XG.2000.1312-3	100-41-4	Ethylbenzene	ND	mg / Kg	1	0.005		11/30/00
X00448	XG.2000.1312-3	95-47-6	o-Xylene	ND	mg / Kg	1	0.005		11/30/00
X00448	XG.2000.1312-3	108-38-3/106-42	p/m-Xylenes	ND	mg / Kg	1	0.01		11/30/00
X00448	XG.2000.1312-3	108-88-3	Toluene	ND	mg / Kg	1	0.005		11/30/00

Assaigai Analytical Laboratories, Inc.

Certificate of Analysis

Client: **CH2MHILL**

Project: **0011249** **KAFB 160660 (TO 10)**

Client Sample ID *SB-29 230'* Sample Matrix *SOIL* Sample Collected *11/29/00 12:30:00*

QC Group	Run Sequence	CAS #	Analyte	Result	Units	Dilution Factor	Detection Limit	Code	Run Date
0011249-05A		**SW846 5030A/8015A GRO by GC/FID**							
X00443	XG.2000.1310-6		Gasoline Range Organics	0.29	mg / Kg	1	0.25		11/30/00
0011249-05B		**SW846 ME/8015A Diesel Range Organics by GC/FID**							
X00441	XG.2000.1311-6		Diesel Range Organics	ND	mg / Kg	1	25		11/29/00

**** Sample specific Detection Limit is determined by multiplying the sample Dilution Factor by the listed Reporting Detection Limit. ****

**** ND = Not detected: less than the sample specific Detection Limit. Results relate only to the items tested. ****

Assaigai Analytical Laboratories, Inc.

Quality Control Summary

Client: CH2MHILL

Project: 0011249 KAFB 160660 (TO 10)

RECEIVED DEC

Explanation of codes

D *Not applicable due to sample dilution*

L *Not applicable due to MDL proximity*

QC Type **LCS: Lab Control Spike** QC Matrix **SOLID**

QC Group	Run Sequence	CAS #	Analyte	Result	Units	Dilution Factor	Detection Limit	Code	Run Date
X00441-002		**SW846 ME/8015A Diesel Range Organics by GC/FID**							
X00441	XG.2000.1276-2		Diesel Range Organics	85	% Recovery	1	NA		11/16/00
X00443-002		**SW846 5030A/8015A GRO by GC/FID**							
X00443	XG.2000.1275-2		Gasoline Range Organics	96	% Recovery	1	NA		11/16/00
X00448-002		**SW846 5030A/8021B Purgeable VOCs by GC/PID**							
X00448	XG.2000.1303-8	71-43-2	Benzene	101	% Recovery	1	NA		11/21/00
X00448	XG.2000.1303-8	100-41-4	Ethylbenzene	101	% Recovery	1	NA		11/21/00
X00448	XG.2000.1303-8	95-47-6	o-Xylene	99	% Recovery	1	NA		11/21/00
X00448	XG.2000.1303-8	108-38-3/106-42	p/m-Xylenes	100	% Recovery	1	NA		11/21/00
X00448	XG.2000.1303-8	108-88-3	Toluene	99	% Recovery	1	NA		11/21/00
X00454-003		**SW846 8260A Purgeable VOCs by GC/MS**							
X00454	XG.2000.1313-3	75-34-3	1,1 Dichloroethene	113	% Recovery	1	NA		11/29/00
X00454	XG.2000.1313-3	106-46-7	1,4 Dichlorobenzene	100	% Recovery	1	NA		11/29/00
X00454	XG.2000.1313-3	71-43-2	Benzene	112	% Recovery	1	NA		11/29/00
X00454	XG.2000.1313-3	108-90-7	Chlorobenzene	107	% Recovery	1	NA		11/29/00
X00454	XG.2000.1313-3	108-88-3	Toluene	112	% Recovery	1	NA		11/29/00
X00454	XG.2000.1313-3	79-01-6	Trichloroethene	110	% Recovery	1	NA		11/29/00

QC Type **LCSD: Lab Control Spike Duplicate Accuracy** QC Matrix **SOLID**

QC Group	Run Sequence	CAS #	Analyte	Result	Units	Dilution Factor	Detection Limit	Code	Run Date
X00441-003		**SW846 ME/8015A Diesel Range Organics by GC/FID**							
X00441	XG.2000.1276-3		Diesel Range Organics	84	% Recovery	1	NA		11/16/00
X00443-003		**SW846 5030A/8015A GRO by GC/FID**							
X00443	XG.2000.1275-3		Gasoline Range Organics	96	% Recovery	1	NA		11/16/00
X00448-003		**SW846 5030A/8021B Purgeable VOCs by GC/PID**							
X00448	XG.2000.1303-9	71-43-2	Benzene	101	% Recovery	1	NA		11/21/00
X00448	XG.2000.1303-9	100-41-4	Ethylbenzene	102	% Recovery	1	NA		11/21/00
X00448	XG.2000.1303-9	95-47-6	o-Xylene	100	% Recovery	1	NA		11/21/00
X00448	XG.2000.1303-9	108-38-3/106-42	p/m-Xylenes	101	% Recovery	1	NA		11/21/00
X00448	XG.2000.1303-9	108-88-3	Toluene	99	% Recovery	1	NA		11/21/00
X00454-004		**SW846 8260A Purgeable VOCs by GC/MS**							
X00454	XG.2000.1313-4	75-34-3	1,1 Dichloroethene	107	% Recovery	1	NA		11/29/00
X00454	XG.2000.1313-4	106-46-7	1,4 Dichlorobenzene	98	% Recovery	1	NA		11/29/00
X00454	XG.2000.1313-4	71-43-2	Benzene	108	% Recovery	1	NA		11/29/00
X00454	XG.2000.1313-4	108-90-7	Chlorobenzene	106	% Recovery	1	NA		11/29/00
X00454	XG.2000.1313-4	108-88-3	Toluene	109	% Recovery	1	NA		11/29/00

X00454	XG.2000.1313-4	79-01-6	Trichloroethene	108	% Recovery	1	NA	11/29/C0

QC Type **LCSD: Lab Control Spike Duplicate Precision** QC Matrix **SOLID**

QC Group	Run Sequence	CAS #	Analyte	Result	Units	Dilution Factor	Detection Limit	Code	Run Date
X00441-003		**SW846 ME/8015A Diesel Range Organics by GC/FID**							
X00441	XG.2000.1276-3		Diesel Range Organics	< 1	RPD	1	NA		11/16/C0
X00443-003		**SW846 5030A/8015A GRO by GC/FID**							
X00443	XG.2000.1275-3		Gasoline Range Organics	< 1	RPD	1	NA		11/16/C0
X00448-003		**SW846 5030A/8021B Purgeable VOCs by GC/PID**							
X00448	XG.2000.1303-9	71-43-2	Benzene	< 1	RPD	1	NA		11/21/C0
X00448	XG.2000.1303-9	100-41-4	Ethylbenzene	< 1	RPD	1	NA		11/21/C0
X00448	XG.2000.1303-9	95-47-6	o-Xylene	< 1	RPD	1	NA		11/21/C0
X00448	XG.2000.1303-9	108-38-3/106-42	p/m-Xylenes	< 1	RPD	1	NA		11/21/C0
X00448	XG.2000.1303-9	108-88-3	Toluene	< 1	RPD	1	NA		11/21/C0
X00454-004		**SW846 8260A Purgeable VOCs by GC/MS**							
X00454	XG.2000.1313-4	75-34-3	1,1 Dichloroethene	5	RPD	1	NA		11/29/C0
X00454	XG.2000.1313-4	106-46-7	1,4 Dichlorobenzene	1	RPD	1	NA		11/29/C0
X00454	XG.2000.1313-4	71-43-2	Benzene	3	RPD	1	NA		11/29/[illegible]
X00454	XG.2000.1313-4	108-90-7	Chlorobenzene	1	RPD	1	NA		11/2[illegible]
X00454	XG.2000.1313-4	108-88-3	Toluene	2	RPD	1	NA		11/29/C0
X00454	XG.2000.1313-4	79-01-6	Trichloroethene	2	RPD	1	NA		11/29/C0

QC Type **MB: Method Blank** QC Matrix **SOLID**

QC Group	Run Sequence	CAS #	Analyte	Result	Units	Dilution Factor	Detection Limit	Code	Run Date
X00441-001		**SW846 ME/8015A Diesel Range Organics by GC/FID**							
X00441	XG.2000.1276-1		Diesel Range Organics	ND	mg / Kg	1	25		11/16/C0
X00441-006		**SW846 ME/8015A Diesel Range Organics by GC/FID**							
X00441	XG.2000.1276-4		Diesel Range Organics	ND	mg / Kg	1	25		11/16/C0
X00441-016		**SW846 ME/8015A Diesel Range Organics by GC/FID**							
X00441	XG.2000.1287-1		Diesel Range Organics	ND	mg / Kg	1	25		11/18/C0
X00441-019		**SW846 ME/8015A Diesel Range Organics by GC/FID**							
X00441	XG.2000.1306-1		Diesel Range Organics	ND	mg / Kg	1	25		11/28/C0
X00441-025		**SW846 ME/8015A Diesel Range Organics by GC/FID**							
X00441	XG.2000.1311-1		Diesel Range Organics	ND	mg / Kg	1	25		11/29/C0
X00443-001		**SW846 5030A/8015A GRO by GC/FID**							
X00443	XG.2000.1275-1		Gasoline Range Organics	ND	mg / Kg	1	0.25		11/16/C0
X00443-013		**SW846 5030A/8015A GRO by GC/FID**							
X00443	XG.2000.1286-1		Gasoline Range Organics	ND	mg / Kg	1	0.25		11/1[illegible]

Quality Control Summary

Explanation of codes

D *Not applicable due to sample dilution*
L *Not applicable due to MDL proximity*

Client: **CH2MHILL**
Project: **0011249** **KAFB 160660 (TO 10)**

X00443-016		**SW846 5030A/8015A GRO by GC/FID**						
X00443	XG.2000.1305-1		Gasoline Range Organics	ND	mg / Kg	1	0.25	11/28/00
X00443-022		**SW846 5030A/8015A GRO by GC/FID**						
X00443	XG.2000.1310-1		Gasoline Range Organics	ND	mg / Kg	1	0.25	11/29/00
X00448-001		**SW846 5030A/8021B Purgeable VOCs by GC/PID**						
X00448	XG.2000.1303-7	71-43-2	Benzene	ND	mg / Kg	1	0.005	11/21/00
X00448	XG.2000.1303-7	100-41-4	Ethylbenzene	ND	mg / Kg	1	0.005	11/21/00
X00448	XG.2000.1303-7	95-47-6	o-Xylene	ND	mg / Kg	1	0.005	11/21/00
X00448	XG.2000.1303-7	108-38-3/106-42	p/m-Xylenes	ND	mg / Kg	1	0.01	11/21/00
X00448	XG.2000.1303-7	108-88-3	Toluene	ND	mg / Kg	1	0.005	11/21/00
X00448-008		**SW846 5030A/8021B Purgeable VOCs by GC/PID**						
X00448	XG.2000.1308-4	71-43-2	Benzene	ND	mg / Kg	1	0.005	11/28/00
X00448	XG.2000.1308-4	100-41-4	Ethylbenzene	ND	mg / Kg	1	0.005	11/28/00
X00448	XG.2000.1308-4	95-47-6	o-Xylene	ND	mg / Kg	1	0.005	11/28/00
X00448	XG.2000.1308-4	108-38-3/106-42	p/m-Xylenes	ND	mg / Kg	1	0.01	11/28/00
X00448	XG.2000.1308-4	108-88-3	Toluene	ND	mg / Kg	1	0.005	11/28/00
X00448-010		**SW846 5030A/8021B Purgeable VOCs by GC/PID**						
X00448	XG.2000.1312-1	71-43-2	Benzene	ND	mg / Kg	1	0.005	11/30/00
X00448	XG.2000.1312-1	100-41-4	Ethylbenzene	ND	mg / Kg	1	0.005	11/30/00
[illegible]8	XG.2000.1312-1	95-47-6	o-Xylene	ND	mg / Kg	1	0.005	11/30/00
[illegible]48	XG.2000.1312-1	108-38-3/106-42	p/m-Xylenes	ND	mg / Kg	1	0.01	11/30/00
X00448	XG.2000.1312-1	108-88-3	Toluene	ND	mg / Kg	1	0.005	11/30/00
X00448-013		**SW846 5030A/8021B Purgeable VOCs by GC/PID**						
X00448	XG.2000.1320-1	71-43-2	Benzene	ND	mg / Kg	1	0.005	12/01/00
X00448	XG.2000.1320-1	100-41-4	Ethylbenzene	ND	mg / Kg	1	0.005	12/01/00
X00448	XG.2000.1320-1	95-47-6	o-Xylene	ND	mg / Kg	1	0.005	12/01/00
X00448	XG.2000.1320-1	108-38-3/106-42	p/m-Xylenes	ND	mg / Kg	1	0.01	12/01/00
X00448	XG.2000.1320-1	108-88-3	Toluene	ND	mg / Kg	1	0.005	12/01/00
X00448-016		**SW846 5030A/8021B Purgeable VOCs by GC/PID**						
X00448	XG.2000.1337-3	71-43-2	Benzene	ND	mg / Kg	1	0.005	12/07/00
X00448	XG.2000.1337-3	100-41-4	Ethylbenzene	ND	mg / Kg	1	0.005	12/07/00
X00448	XG.2000.1337-3	95-47-6	o-Xylene	ND	mg / Kg	1	0.005	12/07/00
X00448	XG.2000.1337-3	108-38-3/106-42	p/m-Xylenes	ND	mg / Kg	1	0.01	12/07/00
X00448	XG.2000.1337-3	108-88-3	Toluene	ND	mg / Kg	1	0.005	12/07/00
X00454-001		**SW846 8260A Purgeable VOCs by GC/MS**						
X00454	XG.2000.1313-1	75-34-3	1,1 Dichloroethane	ND	mg / Kg	1	0.005	11/29/00
X00454	XG.2000.1313-1	75-34-3	1,1 Dichloroethene	ND	mg / Kg	1	0.005	11/29/00
X00454	XG.2000.1313-1	71-55-6	1,1,1 Trichloroethane	ND	mg / Kg	1	0.005	11/29/00
X00454	XG.2000.1313-1	630-20-6	1,1,1,2 Tetrachloroethane	ND	mg / Kg	1	0.005	11/29/00
X00454	XG.2000.1313-1	79-00-5	1,1,2 Trichloroethane	ND	mg / Kg	1	0.005	11/29/00
X00454	XG.2000.1313-1	79-34-5	1,1,2,2 Tetrachloroethane	ND	mg / Kg	1	0.005	11/29/00
X00454	XG.2000.1313-1	106-93-4	1,2 Dibromoethane (EDB)	ND	mg / Kg	1	0.005	11/29/00
[illegible]54	XG.2000.1313-1	95-50-1	1,2 Dichlorobenzene	ND	mg / Kg	1	0.005	11/29/00
X00454	XG.2000.1313-1	107-06-2	1,2 Dichloroethane	ND	mg / Kg	1	0.005	11/29/00

Quality Control Summary

Client: **CH2MHILL**

Project: **0011249** **KAFB 160660 (TO 10)**

Explanation of codes

D *Not applicable due to sample dilut*

L *Not applicable due to MDL proxim*

X00454	XG.2000.1313-1	78-87-5	1,2 Dichloropropane	ND	mg / Kg	1	0.005	11/29/00
X00454	XG.2000.1313-1	96-18-4	1,2,3 Trichloropropane	ND	mg / Kg	1	0.005	11/29/00
X00454	XG.2000.1313-1	95-63-6	1,2,4-Trimethylbenzene	ND	mg / Kg	1	0.005	11/29/00
X00454	XG.2000.1313-1	541-73-1	1,3 Dichlorobenzene	ND	mg / Kg	1	0.005	11/29/00
X00454	XG.2000.1313-1	108-67-8	1,3,5-Trimethylbenzene	ND	mg / Kg	1	0.005	11/29/00
X00454	XG.2000.1313-1	764-41-0	1,4 Dichloro-2-butene	ND	mg / Kg	1	0.05	11/29/00
X00454	XG.2000.1313-1	106-46-7	1,4 Dichlorobenzene	ND	mg / Kg	1	0.005	11/29/00
X00454	XG.2000.1313-1	78-93-3	2-Butanone (MEK)	ND	mg / Kg	1	0.025	11/29/00
X00454	XG.2000.1313-1	110-75-8	2-Chloroethylvinylether	ND	mg / Kg	1	0.025	11/29/00
X00454	XG.2000.1313-1	591-78-6	2-Hexanone (MBK)	ND	mg / Kg	1	0.025	11/29/00
X00454	XG.2000.1313-1	108-10-1	4-Methyl-2-pentanone (MIBK)	ND	mg / Kg	1	0.025	11/29/00
X00454	XG.2000.1313-1	67-64-1	Acetone	ND	mg / Kg	1	0.05	11/29/00
X00454	XG.2000.1313-1	107-02-8	Acrolein	ND	mg / Kg	1	0.1	11/29/00
X00454	XG.2000.1313-1	107-13-1	Acrylonitrile	ND	mg / Kg	1	0.1	11/29/00
X00454	XG.2000.1313-1	71-43-2	Benzene	ND	mg / Kg	1	0.005	11/29/00
X00454	XG.2000.1313-1	75-27-4	Bromodichloromethane	ND	mg / Kg	1	0.005	11/29/00
X00454	XG.2000.1313-1	75-25-2	Bromoform	ND	mg / Kg	1	0.005	11/29/00
X00454	XG.2000.1313-1	74-83-9	Bromomethane	ND	mg / Kg	1	0.025	11/29/00
X00454	XG.2000.1313-1	75-15-0	Carbon disulfide	ND	mg / Kg	1	0.025	11/29/00
X00454	XG.2000.1313-1	56-23-5	Carbon tetrachloride	ND	mg / Kg	1	0.005	11/29/00
X00454	XG.2000.1313-1	108-90-7	Chlorobenzene	ND	mg / Kg	1	0.005	11/29/00
X00454	XG.2000.1313-1	124-48-1	Chlorodibromomethane	ND	mg / Kg	1	0.005	11/29/00
X00454	XG.2000.1313-1	75-00-3	Chloroethane	ND	mg / Kg	1	0.025	11/29/00
X00454	XG.2000.1313-1	67-66-3	Chloroform	ND	mg / Kg	1	0.005	11/29
X00454	XG.2000.1313-1	74-87-3	Chloromethane	ND	mg / Kg	1	0.025	11/29
X00454	XG.2000.1313-1	156-59-2	cis-1,2 dichloroethene	ND	mg / Kg	1	0.005	11/29/00
X00454	XG.2000.1313-1	10061-01-5	cis-1,3 dichloropropene	ND	mg / Kg	1	0.005	11/29/00
X00454	XG.2000.1313-1	74-95-3	Dibromomethane	ND	mg / Kg	1	0.005	11/29/00
X00454	XG.2000.1313-1	97-63-2	Ethyl methacrylate	ND	mg / Kg	1	0.025	11/29/00
X00454	XG.2000.1313-1	100-41-4	Ethylbenzene	ND	mg / Kg	1	0.005	11/29/00
X00454	XG.2000.1313-1		Freon 113	ND	mg / Kg	1	0.025	11/29/00
X00454	XG.2000.1313-1	75-71-8	Freon 12	ND	mg / Kg	1	0.05	11/29/00
X00454	XG.2000.1313-1	74-88-4	Iodomethane	ND	mg / Kg	1	0.025	11/29/00
X00454	XG.2000.1313-1	1634-04-4	Methyl t-butyl ether (MTBE)	ND	mg / Kg	1	0.005	11/29/00
X00454	XG.2000.1313-1	75-09-2	Methylene chloride	ND	mg / Kg	1	0.05	11/29/00
X00454	XG.2000.1313-1	91-20-3	Naphthalene	ND	mg / Kg	1	0.025	11/29/00
X00454	XG.2000.1313-1	95-47-6	o-Xylene	ND	mg / Kg	1	0.005	11/29/00
X00454	XG.2000.1313-1	108-38-3/106-42	p/m Xylenes	ND	mg / Kg	1	0.01	11/29/00
X00454	XG.2000.1313-1	100-42-5	Styrene	ND	mg / Kg	1	0.005	11/29/00
X00454	XG.2000.1313-1	156-60-5	t-1,2 Dichloroethene	ND	mg / Kg	1	0.005	11/29/00
X00454	XG.2000.1313-1	10061-02-6	t-1,3 Dichloropropene	ND	mg / Kg	1	0.005	11/29/00
X00454	XG.2000.1313-1	127-18-4	Tetrachloroethene	ND	mg / Kg	1	0.005	11/29/00
X00454	XG.2000.1313-1	108-88-3	Toluene	ND	mg / Kg	1	0.005	11/29/00
X00454	XG.2000.1313-1	79-01-6	Trichloroethene	ND	mg / Kg	1	0.005	11/29/00
X00454	XG.2000.1313-1	75-69-4	Trichlorofluoromethane	ND	mg / Kg	1	0.025	11/29/00
X00454	XG.2000.1313-1	108-05-4	Vinyl acetate	ND	mg / Kg	1	0.025	11/29/00
X00454	XG.2000.1313-1	75-01-4	Vinyl chloride	ND	mg / Kg	1	0.025	11/29/00
X00454-010		**SW846 8260A Purgeable VOCs by GC/MS**						
X00454	XG.2000.1313-10	75-34-3	1,1 Dichloroethane	ND	mg / Kg	1	0.005	11/3

Quality Control Summary

Explanation of codes

D *Not applicable due to sample dilution*
L *Not applicable due to MDL proximity*

nt: CH2MHILL

ject: 0011249 KAFB 160660 (TO 10)

X00454	XG.2000.1313-10	75-34-3	1,1 Dichloroethene	ND	mg / Kg	1	0.005	11/30/00
X00454	XG.2000.1313-10	71-55-6	1,1,1 Trichloroethane	ND	mg / Kg	1	0.005	11/30/00
X00454	XG.2000.1313-10	630-20-6	1,1,1,2 Tetrachloroethane	ND	mg / Kg	1	0.005	11/30/00
X00454	XG.2000.1313-10	79-00-5	1,1,2 Trichloroethane	ND	mg / Kg	1	0.005	11/30/00
X00454	XG.2000.1313-10	79-34-5	1,1,2,2 Tetrachloroethane	ND	mg / Kg	1	0.005	11/30/00
X00454	XG.2000.1313-10	106-93-4	1,2 Dibromoethane (EDB)	ND	mg / Kg	1	0.005	11/30/00
X00454	XG.2000.1313-10	95-50-1	1,2 Dichlorobenzene	ND	mg / Kg	1	0.005	11/30/00
X00454	XG.2000.1313-10	107-06-2	1,2 Dichloroethane	ND	mg / Kg	1	0.005	11/30/00
X00454	XG.2000.1313-10	78-87-5	1,2 Dichloropropane	ND	mg / Kg	1	0.005	11/30/00
X00454	XG.2000.1313-10	96-18-4	1,2,3 Trichloropropane	ND	mg / Kg	1	0.005	11/30/00
X00454	XG.2000.1313-10	95-63-6	1,2,4-Trimethylbenzene	ND	mg / Kg	1	0.005	11/30/00
X00454	XG.2000.1313-10	541-73-1	1,3 Dichlorobenzene	ND	mg / Kg	1	0.005	11/30/00
X00454	XG.2000.1313-10	108-67-8	1,3,5-Trimethylbenzene	ND	mg / Kg	1	0.005	11/30/00
X00454	XG.2000.1313-10	764-41-0	1,4 Dichloro-2-butene	ND	mg / Kg	1	0.05	11/30/00
X00454	XG.2000.1313-10	106-46-7	1,4 Dichlorobenzene	ND	mg / Kg	1	0.005	11/30/00
X00454	XG.2000.1313-10	78-93-3	2-Butanone (MEK)	ND	mg / Kg	1	0.025	11/30/00
X00454	XG.2000.1313-10	110-75-8	2-Chloroethylvinylether	ND	mg / Kg	1	0.025	11/30/00
X00454	XG.2000.1313-10	591-78-6	2-Hexanone (MBK)	ND	mg / Kg	1	0.025	11/30/00
X00454	XG.2000.1313-10	108-10-1	4-Methyl-2-pentanone (MIBK)	ND	mg / Kg	1	0.025	11/30/00
X00454	XG.2000.1313-10	67-64-1	Acetone	ND	mg / Kg	1	0.05	11/30/00
X00454	XG.2000.1313-10	107-02-8	Acrolein	ND	mg / Kg	1	0.1	11/30/00
X00454	XG.2000.1313-10	107-13-1	Acrylonitrile	ND	mg / Kg	1	0.1	11/30/00
X00454	XG.2000.1313-10	71-43-2	Benzene	ND	mg / Kg	1	0.005	11/30/00
4	XG.2000.1313-10	75-27-4	Bromodichloromethane	ND	mg / Kg	1	0.005	11/30/00
X00454	XG.2000.1313-10	75-25-2	Bromoform	ND	mg / Kg	1	0.005	11/30/00
X00454	XG.2000.1313-10	74-83-9	Bromomethane	ND	mg / Kg	1	0.025	11/30/00
X00454	XG.2000.1313-10	75-15-0	Carbon disulfide	ND	mg / Kg	1	0.025	11/30/00
X00454	XG.2000.1313-10	56-23-5	Carbon tetrachloride	ND	mg / Kg	1	0.005	11/30/00
X00454	XG.2000.1313-10	108-90-7	Chlorobenzene	ND	mg / Kg	1	0.005	11/30/00
X00454	XG.2000.1313-10	124-48-1	Chlorodibromomethane	ND	mg / Kg	1	0.005	11/30/00
X00454	XG.2000.1313-10	75-00-3	Chloroethane	ND	mg / Kg	1	0.025	11/30/00
X00454	XG.2000.1313-10	67-66-3	Chloroform	ND	mg / Kg	1	0.005	11/30/00
X00454	XG.2000.1313-10	74-87-3	Chloromethane	ND	mg / Kg	1	0.025	11/30/00
X00454	XG.2000.1313-10	156-59-2	cis-1,2 dichloroethene	ND	mg / Kg	1	0.005	11/30/00
X00454	XG.2000.1313-10	10061-01-5	cis-1,3 dichloropropene	ND	mg / Kg	1	0.005	11/30/00
X00454	XG.2000.1313-10	74-95-3	Dibromomethane	ND	mg / Kg	1	0.005	11/30/00
X00454	XG.2000.1313-10	97-63-2	Ethyl methacrylate	ND	mg / Kg	1	0.025	11/30/00
X00454	XG.2000.1313-10	100-41-4	Ethylbenzene	ND	mg / Kg	1	0.005	11/30/00
X00454	XG.2000.1313-10		Freon 113	ND	mg / Kg	1	0.025	11/30/00
X00454	XG.2000.1313-10	75-71-8	Freon 12	ND	mg / Kg	1	0.05	11/30/00
X00454	XG.2000.1313-10	74-88-4	Iodomethane	ND	mg / Kg	1	0.025	11/30/00
X00454	XG.2000.1313-10	1634-04-4	Methyl t-butyl ether (MTBE)	ND	mg / Kg	1	0.005	11/30/00
X00454	XG.2000.1313-10	75-09-2	Methylene chloride	ND	mg / Kg	1	0.05	11/30/00
X00454	XG.2000.1313-10	91-20-3	Naphthalene	ND	mg / Kg	1	0.025	11/30/00
X00454	XG.2000.1313-10	95-47-6	o-Xylene	ND	mg / Kg	1	0.005	11/30/00
X00454	XG.2000.1313-10	108-38-3/106-42	p/m Xylenes	ND	mg / Kg	1	0.01	11/30/00
X00454	XG.2000.1313-10	100-42-5	Styrene	ND	mg / Kg	1	0.005	11/30/00
X00454	XG.2000.1313-10	156-60-5	t-1,2 Dichloroethene	ND	mg / Kg	1	0.005	11/30/00
54	XG.2000.1313-10	10061-02-6	t-1,3 Dichloropropene	ND	mg / Kg	1	0.005	11/30/00
0454	XG.2000.1313-10	127-18-4	Tetrachloroethene	ND	mg / Kg	1	0.005	11/30/00

Quality Control Summary

Client: **CH2MHILL**

Project: **0011249** **KAFB 160660 (TO 10)**

Explanation of codes

D *Not applicable due to sample diluti*

L *Not applicable due to MDL proximi*

X00454	XG.2000.1313-10	108-88-3	Toluene	ND	mg / Kg	1	0.005	11/30/00
X00454	XG.2000.1313-10	79-01-6	Trichloroethene	ND	mg / Kg	1	0.005	11/30/00
X00454	XG.2000.1313-10	75-69-4	Trichlorofluoromethane	ND	mg / Kg	1	0.025	11/30/00
X00454	XG.2000.1313-10	108-05-4	Vinyl acetate	ND	mg / Kg	1	0.025	11/30/00
X00454	XG.2000.1313-10	75-01-4	Vinyl chloride	ND	mg / Kg	1	0.025	11/30/00
X00454-018		**SW846 8260A Purgeable VOCs by GC/MS**						
X00454	XG.2000.1325-8	75-34-3	1,1 Dichloroethane	ND	mg / Kg	1	0.005	12/01/00
X00454	XG.2000.1326-1	75-34-3	1,1 Dichloroethane	ND	mg / Kg	1	0.005	12/01/00
X00454	XG.2000.1325-8	75-34-3	1,1 Dichloroethene	ND	mg / Kg	1	0.005	12/01/00
X00454	XG.2000.1326-1	75-34-3	1,1 Dichloroethene	ND	mg / Kg	1	0.005	12/01/00
X00454	XG.2000.1325-8	71-55-6	1,1,1 Trichloroethane	ND	mg / Kg	1	0.005	12/01/00
X00454	XG.2000.1326-1	71-55-6	1,1,1 Trichloroethane	ND	mg / Kg	1	0.005	12/01/00
X00454	XG.2000.1325-8	630-20-6	1,1,1,2 Tetrachloroethane	ND	mg / Kg	1	0.005	12/01/00
X00454	XG.2000.1326-1	630-20-6	1,1,1,2 Tetrachloroethane	ND	mg / Kg	1	0.005	12/01/00
X00454	XG.2000.1325-8	79-00-5	1,1,2 Trichloroethane	ND	mg / Kg	1	0.005	12/01/00
X00454	XG.2000.1326-1	79-00-5	1,1,2 Trichloroethane	ND	mg / Kg	1	0.005	12/01/00
X00454	XG.2000.1325-8	79-34-5	1,1,2,2 Tetrachloroethane	ND	mg / Kg	1	0.005	12/01/00
X00454	XG.2000.1326-1	79-34-5	1,1,2,2 Tetrachloroethane	ND	mg / Kg	1	0.005	12/01/00
X00454	XG.2000.1325-8	106-93-4	1,2 Dibromoethane (EDB)	ND	mg / Kg	1	0.005	12/01/00
X00454	XG.2000.1326-1	106-93-4	1,2 Dibromoethane (EDB)	ND	mg / Kg	1	0.005	12/01/00
X00454	XG.2000.1325-8	95-50-1	1,2 Dichlorobenzene	ND	mg / Kg	1	0.005	12/01/00
X00454	XG.2000.1326-1	95-50-1	1,2 Dichlorobenzene	ND	mg / Kg	1	0.005	12/01/00
X00454	XG.2000.1325-8	107-06-2	1,2 Dichloroethane	ND	mg / Kg	1	0.005	12/01/0
X00454	XG.2000.1326-1	107-06-2	1,2 Dichloroethane	ND	mg / Kg	1	0.005	12/01
X00454	XG.2000.1325-8	78-87-5	1,2 Dichloropropane	ND	mg / Kg	1	0.005	12/01/0
X00454	XG.2000.1326-1	78-87-5	1,2 Dichloropropane	ND	mg / Kg	1	0.005	12/01/00
X00454	XG.2000.1325-8	96-18-4	1,2,3 Trichloropropane	ND	mg / Kg	1	0.005	12/01/00
X00454	XG.2000.1326-1	96-18-4	1,2,3 Trichloropropane	ND	mg / Kg	1	0.005	12/01/00
X00454	XG.2000.1325-8	95-63-6	1,2,4-Trimethylbenzene	ND	mg / Kg	1	0.005	12/01/00
X00454	XG.2000.1326-1	95-63-6	1,2,4-Trimethylbenzene	ND	mg / Kg	1	0.005	12/01/00
X00454	XG.2000.1325-8	541-73-1	1,3 Dichlorobenzene	ND	mg / Kg	1	0.005	12/01/00
X00454	XG.2000.1326-1	541-73-1	1,3 Dichlorobenzene	ND	mg / Kg	1	0.005	12/01/00
X00454	XG.2000.1325-8	108-67-8	1,3,5-Trimethylbenzene	ND	mg / Kg	1	0.005	12/01/00
X00454	XG.2000.1326-1	108-67-8	1,3,5-Trimethylbenzene	ND	mg / Kg	1	0.005	12/01/00
X00454	XG.2000.1325-8	764-41-0	1,4 Dichloro-2-butene	ND	mg / Kg	1	0.05	12/01/00
X00454	XG.2000.1326-1	764-41-0	1,4 Dichloro-2-butene	ND	mg / Kg	1	0.05	12/01/00
X00454	XG.2000.1325-8	106-46-7	1,4 Dichlorobenzene	ND	mg / Kg	1	0.005	12/01/00
X00454	XG.2000.1326-1	106-46-7	1,4 Dichlorobenzene	ND	mg / Kg	1	0.005	12/01/00
X00454	XG.2000.1325-8	78-93-3	2-Butanone (MEK)	ND	mg / Kg	1	0.025	12/01/00
X00454	XG.2000.1326-1	78-93-3	2-Butanone (MEK)	ND	mg / Kg	1	0.025	12/01/00
X00454	XG.2000.1325-8	110-75-8	2-Chloroethylvinylether	ND	mg / Kg	1	0.025	12/01/00
X00454	XG.2000.1326-1	110-75-8	2-Chloroethylvinylether	ND	mg / Kg	1	0.025	12/01/00
X00454	XG.2000.1325-8	591-78-6	2-Hexanone (MBK)	ND	mg / Kg	1	0.025	12/01/00
X00454	XG.2000.1326-1	591-78-6	2-Hexanone (MBK)	ND	mg / Kg	1	0.025	12/01/00
X00454	XG.2000.1325-8	108-10-1	4-Methyl-2-pentanone (MIBK)	ND	mg / Kg	1	0.025	12/01/00
X00454	XG.2000.1326-1	108-10-1	4-Methyl-2-pentanone (MIBK)	ND	mg / Kg	1	0.025	12/01/00
X00454	XG.2000.1325-8	67-64-1	Acetone	ND	mg / Kg	1	0.05	12/01/00
X00454	XG.2000.1326-1	67-64-1	Acetone	ND	mg / Kg	1	0.05	12/01/00
X00454	XG.2000.1325-8	107-02-8	Acrolein	ND	mg / Kg	1	0.1	12/01/
X00454	XG.2000.1326-1	107-02-8	Acrolein	ND	mg / Kg	1	0.1	12/01

Quality Control Summary

Explanation of codes

D *Not applicable due to sample dilution*
L *Not applicable due to MDL proximity*

t: **CH2MHILL**
Project: **0011249** **KAFB 160660 (TO 10)**

X00454	XG.2000.1325-8	107-13-1	Acrylonitrile	ND	mg / Kg	1	0.1	12/01/00
X00454	XG.2000.1326-1	107-13-1	Acrylonitrile	ND	mg / Kg	1	0.1	12/01/00
X00454	XG.2000.1325-8	71-43-2	Benzene	ND	mg / Kg	1	0.005	12/01/00
X00454	XG.2000.1326-1	71-43-2	Benzene	ND	mg / Kg	1	0.005	12/01/00
X00454	XG.2000.1325-8	75-27-4	Bromodichloromethane	ND	mg / Kg	1	0.005	12/01/00
X00454	XG.2000.1326-1	75-27-4	Bromodichloromethane	ND	mg / Kg	1	0.005	12/01/00
X00454	XG.2000.1325-8	75-25-2	Bromoform	ND	mg / Kg	1	0.005	12/01/00
X00454	XG.2000.1326-1	75-25-2	Bromoform	ND	mg / Kg	1	0.005	12/01/00
X00454	XG.2000.1325-8	74-83-9	Bromomethane	ND	mg / Kg	1	0.025	12/01/00
X00454	XG.2000.1326-1	74-83-9	Bromomethane	ND	mg / Kg	1	0.025	12/01/00
X00454	XG.2000.1325-8	75-15-0	Carbon disulfide	ND	mg / Kg	1	0.025	12/01/00
X00454	XG.2000.1326-1	75-15-0	Carbon disulfide	ND	mg / Kg	1	0.025	12/01/00
X00454	XG.2000.1325-8	56-23-5	Carbon tetrachloride	ND	mg / Kg	1	0.005	12/01/00
X00454	XG.2000.1326-1	56-23-5	Carbon tetrachloride	ND	mg / Kg	1	0.005	12/01/00
X00454	XG.2000.1325-8	108-90-7	Chlorobenzene	ND	mg / Kg	1	0.005	12/01/00
X00454	XG.2000.1326-1	108-90-7	Chlorobenzene	ND	mg / Kg	1	0.005	12/01/00
X00454	XG.2000.1325-8	124-48-1	Chlorodibromomethane	ND	mg / Kg	1	0.005	12/01/00
X00454	XG.2000.1326-1	124-48-1	Chlorodibromomethane	ND	mg / Kg	1	0.005	12/01/00
X00454	XG.2000.1325-8	75-00-3	Chloroethane	ND	mg / Kg	1	0.025	12/01/00
X00454	XG.2000.1326-1	75-00-3	Chloroethane	ND	mg / Kg	1	0.025	12/01/00
X00454	XG.2000.1325-8	67-66-3	Chloroform	ND	mg / Kg	1	0.005	12/01/00
X00454	XG.2000.1326-1	67-66-3	Chloroform	ND	mg / Kg	1	0.005	12/01/00
X00454	XG.2000.1325-8	74-87-3	Chloromethane	ND	mg / Kg	1	0.025	12/01/00
	XG.2000.1326-1	74-87-3	Chloromethane	ND	mg / Kg	1	0.025	12/01/00
X00454	XG.2000.1325-8	156-59-2	cis-1,2 dichloroethene	ND	mg / Kg	1	0.005	12/01/00
X00454	XG.2000.1326-1	156-59-2	cis-1,2 dichloroethene	ND	mg / Kg	1	0.005	12/01/00
X00454	XG.2000.1325-8	10061-01-5	cis-1,3 dichloropropene	ND	mg / Kg	1	0.005	12/01/00
X00454	XG.2000.1326-1	10061-01-5	cis-1,3 dichloropropene	ND	mg / Kg	1	0.005	12/01/00
X00454	XG.2000.1325-8	74-95-3	Dibromomethane	ND	mg / Kg	1	0.005	12/01/00
X00454	XG.2000.1326-1	74-95-3	Dibromomethane	ND	mg / Kg	1	0.005	12/01/00
X00454	XG.2000.1325-8	97-63-2	Ethyl methacrylate	ND	mg / Kg	1	0.025	12/01/00
X00454	XG.2000.1326-1	97-63-2	Ethyl methacrylate	ND	mg / Kg	1	0.025	12/01/00
X00454	XG.2000.1325-8	100-41-4	Ethylbenzene	ND	mg / Kg	1	0.005	12/01/00
X00454	XG.2000.1326-1	100-41-4	Ethylbenzene	ND	mg / Kg	1	0.005	12/01/00
X00454	XG.2000.1325-8		Freon 113	ND	mg / Kg	1	0.025	12/01/00
X00454	XG.2000.1326-1		Freon 113	ND	mg / Kg	1	0.025	12/01/00
X00454	XG.2000.1325-8	75-71-8	Freon 12	ND	mg / Kg	1	0.05	12/01/00
X00454	XG.2000.1326-1	75-71-8	Freon 12	ND	mg / Kg	1	0.05	12/01/00
X00454	XG.2000.1325-8	74-88-4	Iodomethane	ND	mg / Kg	1	0.025	12/01/00
X00454	XG.2000.1326-1	74-88-4	Iodomethane	ND	mg / Kg	1	0.025	12/01/00
X00454	XG.2000.1325-8	1634-04-4	Methyl t-butyl ether (MTBE)	ND	mg / Kg	1	0.005	12/01/00
X00454	XG.2000.1326-1	1634-04-4	Methyl t-butyl ether (MTBE)	ND	mg / Kg	1	0.005	12/01/00
X00454	XG.2000.1325-8	75-09-2	Methylene chloride	ND	mg / Kg	1	0.05	12/01/00
X00454	XG.2000.1326-1	75-09-2	Methylene chloride	ND	mg / Kg	1	0.05	12/01/00
X00454	XG.2000.1325-8	91-20-3	Naphthalene	ND	mg / Kg	1	0.025	12/01/00
X00454	XG.2000.1326-1	91-20-3	Naphthalene	ND	mg / Kg	1	0.025	12/01/00
X00454	XG.2000.1325-8	95-47-6	o-Xylene	ND	mg / Kg	1	0.005	12/01/00
X00454	XG.2000.1326-1	95-47-6	o-Xylene	ND	mg / Kg	1	0.005	12/01/00
X00454	XG.2000.1325-8	108-38-3/106-42	p/m Xylenes	ND	mg / Kg	1	0.01	12/01/00

Quality Control Summary

Client: **CH2MHILL**

Project: **0011249** **KAFB 160660 (TO 10)**

Explanation of codes

D *Not applicable due to sample dilu*

L *Not applicable due to MDL proxim*

X00454	XG.2000.1326-1	108-38-3/106-42	p/m Xylenes	ND	mg / Kg	1	0.01	12/01/0
X00454	XG.2000.1325-8	100-42-5	Styrene	ND	mg / Kg	1	0.005	12/01/0
X00454	XG.2000.1326-1	100-42-5	Styrene	ND	mg / Kg	1	0.005	12/01/0
X00454	XG.2000.1325-8	156-60-5	t-1,2 Dichloroethene	ND	mg / Kg	1	0.005	12/01/0
X00454	XG.2000.1326-1	156-60-5	t-1,2 Dichloroethene	ND	mg / Kg	1	0.005	12/01/0
X00454	XG.2000.1325-8	10061-02-6	t-1,3 Dichloropropene	ND	mg / Kg	1	0.005	12/01/0
X00454	XG.2000.1326-1	10061-02-6	t-1,3 Dichloropropene	ND	mg / Kg	1	0.005	12/01/0
X00454	XG.2000.1325-8	127-18-4	Tetrachloroethene	ND	mg / Kg	1	0.005	12/01/0
X00454	XG.2000.1326-1	127-18-4	Tetrachloroethene	ND	mg / Kg	1	0.005	12/01/0
X00454	XG.2000.1325-8	108-88-3	Toluene	ND	mg / Kg	1	0.005	12/01/0
X00454	XG.2000.1326-1	108-88-3	Toluene	ND	mg / Kg	1	0.005	12/01/0
X00454	XG.2000.1325-8	79-01-6	Trichloroethene	ND	mg / Kg	1	0.005	12/01/0
X00454	XG.2000.1326-1	79-01-6	Trichloroethene	ND	mg / Kg	1	0.005	12/01/0
X00454	XG.2000.1325-8	75-69-4	Trichlorofluoromethane	ND	mg / Kg	1	0.025	12/01/0
X00454	XG.2000.1326-1	75-69-4	Trichlorofluoromethane	ND	mg / Kg	1	0.025	12/01/0
X00454	XG.2000.1325-8	108-05-4	Vinyl acetate	ND	mg / Kg	1	0.025	12/01/0
X00454	XG.2000.1326-1	108-05-4	Vinyl acetate	ND	mg / Kg	1	0.025	12/01/0
X00454	XG.2000.1325-8	75-01-4	Vinyl chloride	ND	mg / Kg	1	0.025	12/01/0
X00454	XG.2000.1326-1	75-01-4	Vinyl chloride	ND	mg / Kg	1	0.025	12/01/0

QC Type **MS: Matrix Spike** QC Matrix **SOLID**

QC Group	Run Sequence	CAS #	Analyte	Result	Units	Dilution Factor	Detection Limit	Code	Run Date
X00441-008		**SW846 ME/8015A Diesel Range Organics by GC/FID**							
X00441	XG.2000.1276-6		Diesel Range Organics	84	% Recovery	1	NA		11/16/0
X00443-008		**SW846 5030A/8015A GRO by GC/FID**							
X00443	XG.2000.1275-8		Gasoline Range Organics	99	% Recovery	1	NA		11/16/0
X00448-005		**SW846 5030A/8021B Purgeable VOCs by GC/PID**							
X00448	XG.2000.1303-11	71-43-2	Benzene	106	% Recovery	1	NA		11/21/0
X00448	XG.2000.1303-11	100-41-4	Ethylbenzene	105	% Recovery	1	NA		11/21/0
X00448	XG.2000.1303-11	95-47-6	o-Xylene	103	% Recovery	1	NA		11/21/0
X00448	XG.2000.1303-11	108-38-3/106-42	p/m-Xylenes	104	% Recovery	1	NA		11/21/0
X00448	XG.2000.1303-11	108-88-3	Toluene	103	% Recovery	1	NA		11/21/0
X00454-013		**SW846 8260A Purgeable VOCs by GC/MS**							
X00454	XG.2000.1313-13	75-34-3	1,1 Dichloroethene	106	% Recovery	1	NA		11/30/0
X00454	XG.2000.1313-13	106-46-7	1,4 Dichlorobenzene	101	% Recovery	1	NA		11/30/0
X00454	XG.2000.1313-13	71-43-2	Benzene	112	% Recovery	1	NA		11/30/0
X00454	XG.2000.1313-13	108-90-7	Chlorobenzene	108	% Recovery	1	NA		11/30/0
X00454	XG.2000.1313-13	108-88-3	Toluene	114	% Recovery	1	NA		11/30/0
X00454	XG.2000.1313-13	79-01-6	Trichloroethene	108	% Recovery	1	NA		11/30/0

Quality Control Summary

Explanation of codes

D *Not applicable due to sample dilution*
L *Not applicable due to MDL proximity*

nt: **CH2MHILL**
ject: **0011249** **KAFB 160660 (TO 10)**

QC Type **MSD: Matrix Spike Duplicate Accuracy** QC Matrix **SOLID**

QC Group	Run Sequence	CAS #	Analyte	Result	Units	Dilution Factor	Detection Limit	Code	Run Date
X00441-009		**SW846 ME/8015A Diesel Range Organics by GC/FID**							
X00441	XG.2000.1276-7		Diesel Range Organics	85	% Recovery	1	NA		11/16/00
X00443-009		**SW846 5030A/8015A GRO by GC/FID**							
X00443	XG.2000.1275-9		Gasoline Range Organics	96	% Recovery	1	NA		11/16/00
X00448-006		**SW846 5030A/8021B Purgeable VOCs by GC/PID**							
X00448	XG.2000.1303-12	71-43-2	Benzene	107	% Recovery	1	NA		11/21/00
X00448	XG.2000.1303-12	100-41-4	Ethylbenzene	106	% Recovery	1	NA		11/21/00
X00448	XG.2000.1303-12	95-47-6	o-Xylene	105	% Recovery	1	NA		11/21/00
X00448	XG.2000.1303-12	108-38-3/106-42	p/m-Xylenes	105	% Recovery	1	NA		11/21/00
X00448	XG.2000.1303-12	108-88-3	Toluene	104	% Recovery	1	NA		11/21/00
X00454-014		**SW846 8260A Purgeable VOCs by GC/MS**							
X00454	XG.2000.1313-14	75-34-3	1,1 Dichloroethene	106	% Recovery	1	NA		11/30/00
X00454	XG.2000.1313-14	106-46-7	1,4 Dichlorobenzene	99	% Recovery	1	NA		11/30/00
X00454	XG.2000.1313-14	71-43-2	Benzene	110	% Recovery	1	NA		11/30/00
[illegible]454	XG.2000.1313-14	108-90-7	Chlorobenzene	105	% Recovery	1	NA		11/30/00
[illegible]54	XG.2000.1313-14	108-88-3	Toluene	112	% Recovery	1	NA		11/30/00
X00454	XG.2000.1313-14	79-01-6	Trichloroethene	106	% Recovery	1	NA		11/30/00

QC Type **MSD: Matrix Spike Duplicate Precision** QC Matrix **SOLID**

QC Group	Run Sequence	CAS #	Analyte	Result	Units	Dilution Factor	Detection Limit	Code	Run Date
X00441-009		**SW846 ME/8015A Diesel Range Organics by GC/FID**							
X00441	XG.2000.1276-7		Diesel Range Organics	1	RPD	1	NA		11/16/00
X00443-009		**SW846 5030A/8015A GRO by GC/FID**							
X00443	XG.2000.1275-9		Gasoline Range Organics	2	RPD	1	NA		11/16/00
X00448-006		**SW846 5030A/8021B Purgeable VOCs by GC/PID**							
X00448	XG.2000.1303-12	71-43-2	Benzene	< 1	RPD	1	NA		11/21/00
X00448	XG.2000.1303-12	100-41-4	Ethylbenzene	< 1	RPD	1	NA		11/21/00
X00448	XG.2000.1303-12	95-47-6	o-Xylene	2	RPD	1	NA		11/21/00
X00448	XG.2000.1303-12	108-38-3/106-42	p/m-Xylenes	< 1	RPD	1	NA		11/21/00
X00448	XG.2000.1303-12	108-88-3	Toluene	< 1	RPD	1	NA		11/21/00
X00454-014		**SW846 8260A Purgeable VOCs by GC/MS**							
X00454	XG.2000.1313-14	75-34-3	1,1 Dichloroethene	< 1	RPD	1	NA		11/30/00
X00454	XG.2000.1313-14	106-46-7	1,4 Dichlorobenzene	2	RPD	1	NA		11/30/00
X00454	XG.2000.1313-14	71-43-2	Benzene	2	RPD	1	NA		11/30/00
[illegible]454	XG.2000.1313-14	108-90-7	Chlorobenzene	3	RPD	1	NA		11/30/00
[illegible]54	XG.2000.1313-14	108-88-3	Toluene	2	RPD	1	NA		11/30/00

Quality Control Summary

Client: **CH2MHILL**

Project: **0011249** **KAFB 160660 (TO 10)**

Explanation of codes

D *Not applicable due to sample dilut*

L *Not applicable due to MDL proxim*

X00454	XG.2000.1313-14	79-01-6	Trichloroethene	2	RPD	1	NA	11/30/00

Surrogate Summary: QC

nt: CH2MHILL
ject: 0011249 KAFB 160660 (TO 10)

QC Type **LCS** QC Matrix **SOLID**

QC Group	Run Sequence	CAS #	Analyte	Result	Units	Dilution Factor	Detection Limit	Code	Run Date
X00441-002		DRO							
X00441	XG.2000.1276-2	NA	O-terphenyl	81	% Recovery	1	NA		11/16/00
X00443-002		GRO							
X00443	XG.2000.1275-2	NA	4-Bromofluorobenzene-FID	102	% Recovery	1	NA		11/16/00
X00443	XG.2000.1275-2	NA	4-Bromofluorobenzene-PID	ND	% Recovery	1	NA		11/16/00
X00443	XG.2000.1275-2	NA	aaa-Trifluorotoluene-FID	104	% Recovery	1	NA		11/16/00
X00443	XG.2000.1275-2	NA	aaa-Trifluorotoluene-PID	ND	% Recovery	1	NA		11/16/00
X00448-002		BTEXALL							
X00448	XG.2000.1303-8	NA	4-Bromofluorobenzene	97	% Recovery	1	NA		11/21/00
X00448	XG.2000.1303-8	NA	aaa-Trifluorotoluene	98	% Recovery	1	NA		11/21/00
X00448	XG.2000.1303-8	NA	Bromochloromethane	120	% Recovery	1	NA		11/21/00
X00448	XG.2000.1303-8	NA	Bromochloropropane	48	% Recovery	1	NA		11/21/00
X00448	XG.2000.1303-8	NA	Dichlorobutane	64	% Recovery	1	NA		11/21/00
X00454-003		8260							
X00454	XG.2000.1313-3	NA	1,2 Dichloroethane-D4 (SS)	80	% Recovery	1	NA		11/29/00
54	XG.2000.1313-3	NA	4-Bromofluorobenzene (SS)	94	% Recovery	1	NA		11/29/00
454	XG.2000.1313-3	NA	Dibromofluoromethane (SS)	98	% Recovery	1	NA		11/29/00
X00454	XG.2000.1313-3	NA	Toluene-D8 (SS)	100	% Recovery	1	NA		11/29/00

QC Type **LCSD** QC Matrix **SOLID**

QC Group	Run Sequence	CAS #	Analyte	Result	Units	Dilution Factor	Detection Limit	Code	Run Date
X00441-003		DRO							
X00441	XG.2000.1276-3	NA	O-terphenyl	79	% Recovery	1	NA		11/16/00
X00443-003		GRO							
X00443	XG.2000.1275-3	NA	4-Bromofluorobenzene-FID	102	% Recovery	1	NA		11/16/00
X00443	XG.2000.1275-3	NA	4-Bromofluorobenzene-PID	664	% Recovery	1	NA		11/16/00
X00443	XG.2000.1275-3	NA	aaa-Trifluorotoluene-FID	104	% Recovery	1	NA		11/16/00
X00443	XG.2000.1275-3	NA	aaa-Trifluorotoluene-PID	862	% Recovery	1	NA		11/16/00
X00448-003		BTEXALL							
X00448	XG.2000.1303-9	NA	4-Bromofluorobenzene	99	% Recovery	1	NA		11/21/00
X00448	XG.2000.1303-9	NA	aaa-Trifluorotoluene	98	% Recovery	1	NA		11/21/00
X00448	XG.2000.1303-9	NA	Bromochloromethane	58	% Recovery	1	NA		11/21/00
X00448	XG.2000.1303-9	NA	Bromochloropropane	41	% Recovery	1	NA		11/21/00
X00448	XG.2000.1303-9	NA	Dichlorobutane	123	% Recovery	1	NA		11/21/00
X00454-004		8260							
454	XG.2000.1313-4	NA	1,2 Dichloroethane-D4 (SS)	85	% Recovery	1	NA		11/29/00
454	XG.2000.1313-4	NA	4-Bromofluorobenzene (SS)	97	% Recovery	1	NA		11/29/00

Surrogate Summary: QC

Client: **CH2MHILL**

Project: **0011249** **KAFB 160660 (TO 10)**

X00454	XG.2000.1313-4	NA	Dibromofluoromethane (SS)	98	% Recovery	1	NA	11/29/00
X00454	XG.2000.1313-4	NA	Toluene-D8 (SS)	100	% Recovery	1	NA	11/29/00

QC Type **MB** QC Matrix **SOLID**

QC Group	Run Sequence	CAS #	Analyte	Result	Units	Dilution Factor	Detection Limit	Code	Run Date
X00441-001		DRO							
X00441	XG.2000.1276-1	NA	O-terphenyl	73	% Recovery	1	NA		11/16/00
X00441-006		DRO							
X00441	XG.2000.1276-4	NA	O-terphenyl	71	% Recovery	1	NA		11/16/00
X00441-016		DRO							
X00441	XG.2000.1287-1	NA	O-terphenyl	75	% Recovery	1	NA		11/18/00
X00441-019		DRO							
X00441	XG.2000.1306-1	NA	O-terphenyl	91	% Recovery	1	NA		11/28/00
X00441-025		DRO							
X00441	XG.2000.1311-1	NA	O-terphenyl	92	% Recovery	1	NA		11/29/00
X00443-001		GRO							
X00443	XG.2000.1275-1	NA	4-Bromofluorobenzene-FID	90	% Recovery	1	NA		11/16/00
X00443	XG.2000.1275-1	NA	4-Bromofluorobenzene-PID	ND	% Recovery	1	NA		11/16
X00443	XG.2000.1275-1	NA	aaa-Trifluorotoluene-FID	101	% Recovery	1	NA		11/16/00
X00443	XG.2000.1275-1	NA	aaa-Trifluorotoluene-PID	10	% Recovery	1	NA		11/16/00
X00443-013		GRO							
X00443	XG.2000.1286-1	NA	4-Bromofluorobenzene-FID	90	% Recovery	1	NA		11/18/00
X00443	XG.2000.1286-1	NA	4-Bromofluorobenzene-PID	ND	% Recovery	1	NA		11/18/00
X00443	XG.2000.1286-1	NA	aaa-Trifluorotoluene-FID	102	% Recovery	1	NA		11/18/00
X00443	XG.2000.1286-1	NA	aaa-Trifluorotoluene-PID	ND	% Recovery	1	NA		11/18/00
X00443-016		GRO							
X00443	XG.2000.1305-1	NA	4-Bromofluorobenzene-FID	83	% Recovery	1	NA		11/28/00
X00443	XG.2000.1305-1	NA	4-Bromofluorobenzene-PID	ND	% Recovery	1	NA		11/28/00
X00443	XG.2000.1305-1	NA	aaa-Trifluorotoluene-FID	100	% Recovery	1	NA		11/28/00
X00443	XG.2000.1305-1	NA	aaa-Trifluorotoluene-PID	ND	% Recovery	1	NA		11/28/00
X00443-022		GRO							
X00443	XG.2000.1310-1	NA	4-Bromofluorobenzene-FID	82	% Recovery	1	NA		11/29/00
X00443	XG.2000.1310-1	NA	4-Bromofluorobenzene-PID	ND	% Recovery	1	NA		11/29/00
X00443	XG.2000.1310-1	NA	aaa-Trifluorotoluene-FID	100	% Recovery	1	NA		11/29/00
X00443	XG.2000.1310-1	NA	aaa-Trifluorotoluene-PID	8	% Recovery	1	NA		11/29/00
X00448-001		BTEXALL							
X00448	XG.2000.1303-7	NA	4-Bromofluorobenzene	98	% Recovery	1	NA		11/21/00
X00448	XG.2000.1303-7	NA	aaa-Trifluorotoluene	98	% Recovery	1	NA		11/21/00
X00448	XG.2000.1303-7	NA	Bromochloromethane	14	% Recovery	1	NA		11/21/00
X00448	XG.2000.1303-7	NA	Bromochloropropane	59	% Recovery	1	NA		11/21/00
X00448	XG.2000.1303-7	NA	Dichlorobutane	12	% Recovery	1	NA		11/21/00

Surrogate Summary: QC

nt: CH2MHILL

ject: 0011249 KAFB 160660 (TO 10)

X00448-008		BTEXALL						
X00448	XG.2000.1308-4	NA	4-Bromofluorobenzene	96	% Recovery	1	NA	11/28/00
X00448	XG.2000.1308-4	NA	aaa-Trifluorotoluene	100	% Recovery	1	NA	11/28/00
X00448	XG.2000.1308-4	NA	Bromochloromethane	177	% Recovery	1	NA	11/28/00
X00448	XG.2000.1308-4	NA	Bromochloropropane	142	% Recovery	1	NA	11/28/00
X00448	XG.2000.1308-4	NA	Dichlorobutane	117	% Recovery	1	NA	11/28/00
X00448-010		BTEXALL						
X00448	XG.2000.1312-1	NA	4-Bromofluorobenzene	96	% Recovery	1	NA	11/30/00
X00448	XG.2000.1312-1	NA	aaa-Trifluorotoluene	99	% Recovery	1	NA	11/30/00
X00448	XG.2000.1312-1	NA	Bromochloromethane	204	% Recovery	1	NA	11/30/00
X00448	XG.2000.1312-1	NA	Bromochloropropane	47	% Recovery	1	NA	11/30/00
X00448	XG.2000.1312-1	NA	Dichlorobutane	54	% Recovery	1	NA	11/30/00
X00448-013		BTEXALL						
X00448	XG.2000.1320-1	NA	4-Bromofluorobenzene	96	% Recovery	1	NA	12/01/00
X00448	XG.2000.1320-1	NA	aaa-Trifluorotoluene	95	% Recovery	1	NA	12/01/00
X00448	XG.2000.1320-1	NA	Bromochloromethane	37	% Recovery	1	NA	12/01/00
X00448	XG.2000.1320-1	NA	Bromochloropropane	78	% Recovery	1	NA	12/01/00
X00448	XG.2000.1320-1	NA	Dichlorobutane	35	% Recovery	1	NA	12/01/00
X00448-016		BTEXALL						
X00448	XG.2000.1337-3	NA	4-Bromofluorobenzene	97	% Recovery	1	NA	12/07/00
X00448	XG.2000.1337-3	NA	aaa-Trifluorotoluene	100	% Recovery	1	NA	12/07/00
[illegible]8	XG.2000.1337-3	NA	Bromochloromethane	44	% Recovery	1	NA	12/07/00
[illegible]448	XG.2000.1337-3	NA	Bromochloropropane	131	% Recovery	1	NA	12/07/00
X00448	XG.2000.1337-3	NA	Dichlorobutane	140	% Recovery	1	NA	12/07/00
X00454-001		8260						
X00454	XG.2000.1313-1	NA	1,2 Dichloroethane-D4 (SS)	86	% Recovery	1	NA	11/29/00
X00454	XG.2000.1313-1	NA	4-Bromofluorobenzene (SS)	98	% Recovery	1	NA	11/29/00
X00454	XG.2000.1313-1	NA	Dibromofluoromethane (SS)	98	% Recovery	1	NA	11/29/00
X00454	XG.2000.1313-1	NA	Toluene-D8 (SS)	102	% Recovery	1	NA	11/29/00
X00454-010		8260						
X00454	XG.2000.1313-10	NA	1,2 Dichloroethane-D4 (SS)	95	% Recovery	1	NA	11/30/00
X00454	XG.2000.1313-10	NA	4-Bromofluorobenzene (SS)	102	% Recovery	1	NA	11/30/00
X00454	XG.2000.1313-10	NA	Dibromofluoromethane (SS)	99	% Recovery	1	NA	11/30/00
X00454	XG.2000.1313-10	NA	Toluene-D8 (SS)	101	% Recovery	1	NA	11/30/00
X00454-018		8260						
X00454	XG.2000.1325-8	NA	1,2 Dichloroethane-D4 (SS)	85	% Recovery	1	NA	12/01/00
X00454	XG.2000.1326-1	NA	1,2 Dichloroethane-D4 (SS)	85	% Recovery	1	NA	12/01/00
X00454	XG.2000.1325-8	NA	4-Bromofluorobenzene (SS)	95	% Recovery	1	NA	12/01/00
X00454	XG.2000.1326-1	NA	4-Bromofluorobenzene (SS)	95	% Recovery	1	NA	12/01/00
X00454	XG.2000.1325-8	NA	Dibromofluoromethane (SS)	99	% Recovery	1	NA	12/01/00
X00454	XG.2000.1326-1	NA	Dibromofluoromethane (SS)	99	% Recovery	1	NA	12/01/00
X00454	XG.2000.1325-8	NA	Toluene-D8 (SS)	102	% Recovery	1	NA	12/01/00
X00454	XG.2000.1326-1	NA	Toluene-D8 (SS)	102	% Recovery	1	NA	12/01/00

Surrogate Summary: QC

Client: CH2MHILL

Project: 0011249 KAFB 160660 (TO 10)

QC Type **MS** QC Matrix **SOLID**

QC Group	Run Sequence	CAS #	Analyte	Result	Units	Dilution Factor	Detection Limit	Code	Run Date
X00441-008		DRO							
X00441	XG.2000.1276-6	NA	O-terphenyl	79	% Recovery	1	NA		11/16/00
X00443-008		GRO							
X00443	XG.2000.1275-8	NA	4-Bromofluorobenzene-FID	102	% Recovery	1	NA		11/16/00
X00443	XG.2000.1275-8	NA	4-Bromofluorobenzene-PID	ND	% Recovery	1	NA		11/16/00
X00443	XG.2000.1275-8	NA	aaa-Trifluorotoluene-FID	104	% Recovery	1	NA		11/16/00
X00443	XG.2000.1275-8	NA	aaa-Trifluorotoluene-PID	ND	% Recovery	1	NA		11/16/00
X00448-005		BTEXALL							
X00448	XG.2000.1303-11	NA	4-Bromofluorobenzene	100	% Recovery	1	NA		11/21/00
X00448	XG.2000.1303-11	NA	aaa-Trifluorotoluene	101	% Recovery	1	NA		11/21/00
X00448	XG.2000.1303-11	NA	Bromochloromethane	31	% Recovery	1	NA		11/21/00
X00448	XG.2000.1303-11	NA	Bromochloropropane	42	% Recovery	1	NA		11/21/00
X00448	XG.2000.1303-11	NA	Dichlorobutane	48	% Recovery	1	NA		11/21/00
X00454-013		8260							
X00454	XG.2000.1313-13	NA	1,2 Dichloroethane-D4 (SS)	97	% Recovery	1	NA		11/30/00
X00454	XG.2000.1313-13	NA	4-Bromofluorobenzene (SS)	99	% Recovery	1	NA		11/30/
X00454	XG.2000.1313-13	NA	Dibromofluoromethane (SS)	100	% Recovery	1	NA		11/3
X00454	XG.2000.1313-13	NA	Toluene-D8 (SS)	100	% Recovery	1	NA		11/30/00

QC Type **MSD** QC Matrix **SOLID**

QC Group	Run Sequence	CAS #	Analyte	Result	Units	Dilution Factor	Detection Limit	Code	Run Date
X00441-009		DRO							
X00441	XG.2000.1276-7	NA	O-terphenyl	79	% Recovery	1	NA		11/16/00
X00443-009		GRO							
X00443	XG.2000.1275-9	NA	4-Bromofluorobenzene-FID	102	% Recovery	1	NA		11/16/00
X00443	XG.2000.1275-9	NA	4-Bromofluorobenzene-PID	ND	% Recovery	1	NA		11/16/00
X00443	XG.2000.1275-9	NA	aaa-Trifluorotoluene-FID	103	% Recovery	1	NA		11/16/00
X00443	XG.2000.1275-9	NA	aaa-Trifluorotoluene-PID	315	% Recovery	1	NA		11/16/00
X00448-006		BTEXALL							
X00448	XG.2000.1303-12	NA	4-Bromofluorobenzene	100	% Recovery	1	NA		11/21/00
X00448	XG.2000.1303-12	NA	aaa-Trifluorotoluene	102	% Recovery	1	NA		11/21/00
X00448	XG.2000.1303-12	NA	Bromochloromethane	159	% Recovery	1	NA		11/21/00
X00448	XG.2000.1303-12	NA	Bromochloropropane	63	% Recovery	1	NA		11/21/00
X00448	XG.2000.1303-12	NA	Dichlorobutane	235	% Recovery	1	NA		11/21/00
X00454-014		8260							
X00454	XG.2000.1313-14	NA	1,2 Dichloroethane-D4 (SS)	99	% Recovery	1	NA		11/30/00
X00454	XG.2000.1313-14	NA	4-Bromofluorobenzene (SS)	98	% Recovery	1	NA		11/3

Surrogate Summary: QC

Client: **CH2MHILL**

Project: **0011249** **KAFB 160660 (TO 10)**

X00454	XG.2000.1313-14	NA	Dibromofluoromethane (SS)	100	% Recovery	1	NA	11/30/00
X00454	XG.2000.1313-14	NA	Toluene-D8 (SS)	101	% Recovery	1	NA	11/30/00

Assaigai Analytical Laboratories, Inc.

Surrogate Summary: Fraction

t: CH2MHILL

Project: 0011249 KAFB 160660 (TO 10)

Client Sample ID **SB-29 160'** Sample Matrix **SOIL**

QC Group	Run Sequence	CAS #	Analyte	Result	Units	Dilution Factor	Detection Limit	Code	Run Date
0011249-01A		GRO							**X00443-023**
X00443	XG.2000.1310-2	NA	4-Bromofluorobenzene-FID	85	% Recovery	1	NA		11/29/00
X00443	XG.2000.1310-2	NA	4-Bromofluorobenzene-PID	ND	% Recovery	1	NA		11/29/00
X00443	XG.2000.1310-2	NA	aaa-Trifluorotoluene-FID	103	% Recovery	1	NA		11/29/00
X00443	XG.2000.1310-2	NA	aaa-Trifluorotoluene-PID	ND	% Recovery	1	NA		11/29/00
0011249-01B		DRO							**X00441-026**
X00441	XG.2000.1311-2	NA	O-terphenyl	95	% Recovery	1	NA		11/29/00
0011249-01C		BTEXALL							**X00448-011**
X00448	XG.2000.1312-2	NA	4-Bromofluorobenzene	96	% Recovery	1	NA		11/30/00
X00448	XG.2000.1312-2	NA	aaa-Trifluorotoluene	102	% Recovery	1	NA		11/30/00
X00448	XG.2000.1312-2	NA	Bromochloromethane	12	% Recovery	1	NA		11/30/00
X00448	XG.2000.1312-2	NA	Bromochloropropane	5	% Recovery	1	NA		11/30/00
X00448	XG.2000.1312-2	NA	Dichlorobutane	7	% Recovery	1	NA		11/30/00

Client Sample ID **SB-29 170'** Sample Matrix **SOIL**

QC Group	Run Sequence	CAS #	Analyte	Result	Units	Dilution Factor	Detection Limit	Code	Run Date
0011249-02A		GRO							**X00443-024**
X00443	XG.2000.1310-3	NA	4-Bromofluorobenzene-FID	85	% Recovery	1	NA		11/29/00
X00443	XG.2000.1310-3	NA	4-Bromofluorobenzene-PID	ND	% Recovery	1	NA		11/29/00
X00443	XG.2000.1310-3	NA	aaa-Trifluorotoluene-FID	102	% Recovery	1	NA		11/29/00
X00443	XG.2000.1310-3	NA	aaa-Trifluorotoluene-PID	ND	% Recovery	1	NA		11/29/00
0011249-02B		DRO							**X00441-027**
X00441	XG.2000.1311-3	NA	O-terphenyl	93	% Recovery	1	NA		11/29/00
0011249-02C		8260							**X00454-012**
X00454	XG.2000.1313-12	NA	1,2 Dichloroethane-D4 (SS)	95	% Recovery	1	NA		11/30/00
X00454	XG.2000.1313-12	NA	4-Bromofluorobenzene (SS)	100	% Recovery	1	NA		11/30/00
X00454	XG.2000.1313-12	NA	Dibromofluoromethane (SS)	99	% Recovery	1	NA		11/30/00
X00454	XG.2000.1313-12	NA	Toluene-D8 (SS)	101	% Recovery	1	NA		11/30/00

Client Sample ID **SB-29 210'** Sample Matrix **SOIL**

QC Group	Run Sequence	CAS #	Analyte	Result	Units	Dilution Factor	Detection Limit	Code	Run Date
0011249-03A		GRO							X00443-025
X00443	XG.2000.1310-4	NA	4-Bromofluorobenzene-FID	85	% Recovery	1	NA		11/29/00
X00443	XG.2000.1310-4	NA	4-Bromofluorobenzene-PID	ND	% Recovery	1	NA		11/29/00

Surrogate Summary: Fraction

Client: **CH2MHILL**

Project: **0011249** **KAFB 160660 (TO 10)**

X00443	XG.2000.1310-4	NA	aaa-Trifluorotoluene-FID	103	% Recovery	1	NA		11/29/00
X00443	XG.2000.1310-4	NA	aaa-Trifluorotoluene-PID	ND	% Recovery	1	NA		11/29/00
0011249-03B		DRO							**X00441-028**
X00441	XG.2000.1311-4	NA	O-terphenyl	94	% Recovery	1	NA		11/29/00

Client Sample ID **SB-29 220'** Sample Matrix **SOIL**

QC Group	Run Sequence	CAS #	Analyte	Result	Units	Dilution Factor	Detection Limit	Code	Run Date
0011249-04A		GRO							**X00443-026**
X00443	XG.2000.1310-5	NA	4-Bromofluorobenzene-FID	85	% Recovery	1	NA		11/29/00
X00443	XG.2000.1310-5	NA	4-Bromofluorobenzene-PID	ND	% Recovery	1	NA		11/29/00
X00443	XG.2000.1310-5	NA	aaa-Trifluorotoluene-FID	103	% Recovery	1	NA		11/29/00
X00443	XG.2000.1310-5	NA	aaa-Trifluorotoluene-PID	ND	% Recovery	1	NA		11/29/00
0011249-04B		DRO							**X00441-029**
X00441	XG.2000.1311-5	NA	O-terphenyl	90	% Recovery	1	NA		11/29/00
0011249-04C		BTEXALL							**X00448-012**
X00448	XG.2000.1312-3	NA	4-Bromofluorobenzene	99	% Recovery	1	NA		11/30/00
X00448	XG.2000.1312-3	NA	aaa-Trifluorotoluene	101	% Recovery	1	NA		11/30/00
X00448	XG.2000.1312-3	NA	Bromochloromethane	128	% Recovery	1	NA		11/30/00
X00448	XG.2000.1312-3	NA	Bromochloropropane	119	% Recovery	1	NA		11/3
X00448	XG.2000.1312-3	NA	Dichlorobutane	45	% Recovery	1	NA		11/30/00

Client Sample ID **SB-29 230'** Sample Matrix **SOIL**

QC Group	Run Sequence	CAS #	Analyte	Result	Units	Dilution Factor	Detection Limit	Code	Run Date
0011249-05A		GRO							**X00443-027**
X00443	XG.2000.1310-6	NA	4-Bromofluorobenzene-FID	86	% Recovery	1	NA		11/30/00
X00443	XG.2000.1310-6	NA	4-Bromofluorobenzene-PID	ND	% Recovery	1	NA		11/30/00
X00443	XG.2000.1310-6	NA	aaa-Trifluorotoluene-FID	111	% Recovery	1	NA		11/30/00
X00443	XG.2000.1310-6	NA	aaa-Trifluorotoluene-PID	ND	% Recovery	1	NA		11/30/00
0011249-05B		DRO							**X00441-030**
X00441	XG.2000.1311-6	NA	O-terphenyl	93	% Recovery	1	NA		11/29/00

SSAIGAI
ANALYTICAL
LABORATORIES, INC.

Chain of Custody Record

Lab job no.: 11299 Date 11/29

Page 1 of 1

ALBUQUERQUE, NEW MEXICO 87109
(505) 345-8964

3332 WEDGEWOOD
EL PASO, TEXAS 79925
(915) 593-6000

127 EASTGATE DRIVE, 212-C
LOS ALAMOS, NEW MEXICO 87544
(505) 662-2558

Client: CH2M HILL

Address: 6501 LINDBERGH RD

City / State / Zip: ABQ NM 87110

Project Name / Number: [illegible]

Contract / Purchase Order / Quote:

Project Manager / Contact: [illegible]

Telephone No.: 884.9600

Fax No.: 883 7507

Samplers: (Signature) [illegible]

AAL Fraction Number	Field Sample Number / Location	Date	Time	Sample Type	Type / Size of Container	Preservation Temp.	Preservation Chemical	No. of Containers	GRO	DRO	BTEX	VOC								Remarks
	SB-29 160'	11/29	1530	Soil	4oz VOA	ICE	NO	3	X	X	X									
	SB-29 170'	11/29	1620	Soil	4oz VOA	ICE	NO	3	X	X		X								
	SB-29 210'	11/29	1035	Soil	4oz VOA	ICE	NO	2	X	X										
	SB-29 220'	11/29	1115	Soil	4oz VOA	ICE	NO	3	X	X	X									
	SB-29 230'	11/29	1230	Soil	4oz VOA	ICE	NO	2	X	X										

Relinquished by:	Date	Received by:	Relinquished by:	Date	Received by:
Signature [illegible]	[illegible]	Signature [illegible]	Signature		Signature
Printed [illegible]	Time [illegible]	Printed [illegible]	Printed	Time	Printed
Company [illegible]		Company [illegible]	Company		Company
Reason [illegible]		Reason [illegible]	Reason		Reason

Method of Shipment:

Shipment No.

Special Instructions:

Comments:

After analysis, samples are to be:

- ☐ Disposed of (additional fee)
- ☐ Stored (30 days max)
- ☐ Stored over 30 days (additional fee)
- ☐ Returned to customer

COURIER

RECEIVED DEC 1 2 2000

ASSAIGAI
ANALYTICAL
LABORATORIES, INC.
7300 Jefferson, NE • Albuquerque, New Mexico 87109 • (505) 345-8964 • FAX (505) 345-7259
3332 Wedgewood Dr., Suite N • El Paso, Texas 79925 • (915) 593-6000 • FAX (915) 593-7820
127 Eastgate Drive, 212-C • Los Alamos, New Mexico 87544 • (505) 662-2556

Explanation of codes

B	*analyte detected in Method Blank*
E	*result is estimated*
H	*analyzed out of hold time*
N	*tentatively identified compound*
S	*subcontracted*
1-9	*see footnote*

CH2MHILL
attn: **AMY HALLORAN**
6001 INDIAN SCHOOL RD NE STE 350
ALBUQUERQUE, NM 87110-4140

Assaigai Analytical Laboratories, Inc.

Certificate of Analysis

Client: **CH2MHILL**
Project: **0011269** **160660 (TO.10) KAFB**

William P. Biava: President of Assaigai Analytical Laboratories, Inc.

Client Sample ID ***SB29-240'*** Sample Matrix ***SOIL*** Sample Collected ***11/29/00 14:00:00***

QC Group	Run Sequence	CAS #	Analyte	Result	Units	Dilution Factor	Detection Limit	Code	Run Date
0011269-01A		**SW846 5030A/8015A GRO by GC/FID**							
X00457	XG.2000.1317-4		Gasoline Range Organics	ND	mg / Kg	1	0.25		12/01/00
0011269-01B		**SW846 ME/8015A Diesel Range Organics by GC/FID**							
X00459	XG.2000.1315-6		Diesel Range Organics	ND	mg / Kg	1	25		12/01/00
0011269-01C		**SW846 5030A/8021B Purgeable VOCs by GC/PID**							
X00448	XG.2000.1320-5	71-43-2	Benzene	ND	mg / Kg	1	0.005		12/01/00
X00448	XG.2000.1320-5	100-41-4	Ethylbenzene	ND	mg / Kg	1	0.005		12/01/00
X00448	XG.2000.1320-5	95-47-6	o-Xylene	ND	mg / Kg	1	0.005		12/01/00
X00448	XG.2000.1320-5	108-38-3/106-42	p/m-Xylenes	ND	mg / Kg	1	0.01		12/01/00
X00448	XG.2000.1320-5	108-88-3	Toluene	ND	mg / Kg	1	0.005		12/01/00

Client Sample ID ***EQUIP RINSE*** Sample Matrix ***H2O*** Sample Collected ***11/29/00 15:00:00***

QC Group	Run Sequence	CAS #	Analyte	Result	Units	Dilution Factor	Detection Limit	Code	Run Date
0011269-02A		**SW846 3510B/8270B SVOCs by GC/MS**							
X00460	XG.2000.1328-4	120-82-1	1,2,4-Trichlorobenzene	ND	ug / L	1	1		12/04/00
X00460	XG.2000.1328-4	95-50-1	1,2-Dichlorobenzene	ND	ug / L	1	1		12/04/00
60	XG.2000.1328-4	541-73-1	1,3-Dichlorobenzene	ND	ug / L	1	1		12/04/00

Member
REPRODUCTION OF THIS REPORT IN LESS THAN FULL REQUIRES THE WRITTEN CONSENT OF AAL
THIS REPORT MAY NOT BE USED IN ANY MANNER BY THE CLIENT OR ANY OTHER PARTY WITHOUT AAL'S
PRIOR CONSENT AS MEASURED BY ANY AAL REPORTING

Certificate of Analysis

Client: **CH2MHILL**

Project: **0011269** **160660 (TO.10) KAFB**

X00460	XG.2000.1328-4	106-46-7	1,4-Dichlorobenzene	ND	ug / L	1	1	12/04/00
X00460	XG.2000.1328-4	90-12-0	1-Methylnaphthalene	ND	ug / L	1	1	12/04/00
X00460	XG.2000.1328-4	58-90-2	2,3,4,6-Tetrachlorophenol	ND	ug / L	1	5	12/04/00
X00460	XG.2000.1328-4	95-95-4	2,4,5-Trichlorophenol	ND	ug / L	1	5	12/04/00
X00460	XG.2000.1328-4	88-06-2	2,4,6-Trichlorophenol	ND	ug / L	1	5	12/04/00
X00460	XG.2000.1328-4	120-83-2	2,4-Dichlorophenol	ND	ug / L	1	5	12/04/00
X00460	XG.2000.1328-4	105-67-9	2,4-Dimethylphenol	ND	ug / L	1	1	12/04/00
X00460	XG.2000.1328-4	51-28-5	2,4-Dinitrophenol	ND	ug / L	1	10	12/04/00
X00460	XG.2000.1328-4	121-14-2	2,4-Dinitrotoluene	ND	ug / L	1	5	12/04/00
X00460	XG.2000.1328-4	606-20-2	2,6-Dinitrotoluene	ND	ug / L	1	5	12/04/00
X00460	XG.2000.1328-4	91-58-7	2-Chloronaphthalene	ND	ug / L	1	1	12/04/00
X00460	XG.2000.1328-4	95-57-8	2-Chlorophenol	ND	ug / L	1	1	12/04/00
X00460	XG.2000.1328-4	91-57-6	2-Methylnaphthalene	ND	ug / L	1	1	12/04/00
X00460	XG.2000.1328-4	95-48-7	2-Methylphenol	ND	ug / L	1	1	12/04/00
X00460	XG.2000.1328-4	88-74-4	2-Nitroaniline	ND	ug / L	1	5	12/04/00
X00460	XG.2000.1328-4	88-75-5	2-Nitrophenol	ND	ug / L	1	5	12/04/00
X00460	XG.2000.1328-4		3+4 Methylphenol	ND	ug / L	1	1	12/04/00
X00460	XG.2000.1328-4	91-94-1	3,3-Dichlorobenzidine	ND	ug / L	1	10	12/04/00
X00460	XG.2000.1328-4	99-09-2	3-Nitroaniline	ND	ug / L	1	5	12/04/00
X00460	XG.2000.1328-4	534-52-1	4,6-Dinitro-2-methylphenol	ND	ug / L	1	10	12/04/00
X00460	XG.2000.1328-4	101-55-3	4-Bromophenyl-phenylether	ND	ug / L	1	1	12/04/00
X00460	XG.2000.1328-4	59-50-7	4-Chloro-3-methylphenol	ND	ug / L	1	5	12/04/00
X00460	XG.2000.1328-4	106-47-8	4-Chloroaniline	ND	ug / L	1	5	12/04
X00460	XG.2000.1328-4	7005-72-3	4-Chlorophenyl-phenylether	ND	ug / L	1	1	12/0
X00460	XG.2000.1328-4	100-01-6	4-Nitroaniline	ND	ug / L	1	5	12/04/00
X00460	XG.2000.1328-4	100-02-7	4-Nitrophenol	ND	ug / L	1	10	12/04/00
X00460	XG.2000.1328-4	83-32-9	Acenaphthene	ND	ug / L	1	1	12/04/00
X00460	XG.2000.1328-4	208-96-8	Acenaphthylene	ND	ug / L	1	1	12/04/00
X00460	XG.2000.1328-4	62-53-3	Aniline	ND	ug / L	1	10	12/04/00
X00460	XG.2000.1328-4	120-12-7	Anthracene	ND	ug / L	1	1	12/04/00
X00460	XG.2000.1328-4		Azobenzene&1,2-Diphenylhydrazine	ND	ug / L	1	1	12/04/00
X00460	XG.2000.1328-4	56-55-3	Benzo (a) anthracene	ND	ug / L	1	1	12/04/00
X00460	XG.2000.1328-4	50-32-8	Benzo(a)pyrene	ND	ug / L	1	1	12/04/00
X00460	XG.2000.1328-4		Benzo(b & k)fluoranthene	ND	ug / L	1	1	12/04/00
X00460	XG.2000.1328-4	191-24-2	Benzo(g,h,i)perylene	ND	ug / L	1	1	12/04/00
X00460	XG.2000.1328-4	64-85-0	Benzoic acid	ND	ug / L	1	25	12/04/00
X00460	XG.2000.1328-4	100-51-6	Benzyl alcohol	ND	ug / L	1	5	12/04/00
X00460	XG.2000.1328-4	111-44-4	bis (2-Chloroethyl) ether	ND	ug / L	1	1	12/04/00
X00460	XG.2000.1328-4	111-91-1	bis(2-Chloroethoxy)methane	ND	ug / L	1	1	12/04/00
X00460	XG.2000.1328-4	108-60-1	bis(2-Chloroisopropyl)ether	ND	ug / L	1	1	12/04/00
X00460	XG.2000.1328-4	117-81-7	bis(2-Ethylhexyl)phthalate	ND	ug / L	1	5	12/04/00
X00460	XG.2000.1328-4	85-68-7	Butylbenzylphthalate	ND	ug / L	1	1	12/04/00
X00460	XG.2000.1328-4	218-01-9	Chrysene	ND	ug / L	1	1	12/04/00
X00460	XG.2000.1328-4	84-74-2	di-n-Butylphthalate	ND	ug / L	1	1	12/04/00
X00460	XG.2000.1328-4	117-84-0	di-n-Octylpthalate	ND	ug / L	1	1	12/04/00
X00460	XG.2000.1328-4	53-70-3	Dibenz(a,h)anthracene	ND	ug / L	1	1	12/04/00
X00460	XG.2000.1328-4	132-64-9	Dibenzofuran	ND	ug / L	1	1	12/04/00
X00460	XG.2000.1328-4	84-66-2	Diethylphthalate	ND	ug / L	1	1	12/04

Certificate of Analysis

t: **CH2MHILL**

Project: **0011269** **160660 (TO.10) KAFB**

X00460	XG.2000.1328-4	131-11-3	Dimethylphthalate	ND	ug / L	1	1	12/04/00
X00460	XG.2000.1328-4	206-44-0	Fluoranthene	ND	ug / L	1	1	12/04/00
X00460	XG.2000.1328-4	86737	Fluorene	ND	ug / L	1	1	12/04/00
X00460	XG.2000.1328-4	118-74-1	Hexachlorobenzene	ND	ug / L	1	10	12/04/00
X00460	XG.2000.1328-4	87-68-3	Hexachlorobutadiene	ND	ug / L	1	10	12/04/00
X00460	XG.2000.1328-4	77-47-4	Hexachlorocyclopentadiene	ND	ug / L	1	10	12/04/00
X00460	XG.2000.1328-4	67-72-1	Hexachloroethane	ND	ug / L	1	5	12/04/00
X00460	XG.2000.1328-4	193-39-5	Indeno(1,2,3-cd)pyrene	ND	ug / L	1	1	12/04/00
X00460	XG.2000.1328-4	78-59-1	Isophorone	ND	ug / L	1	1	12/04/00
X00460	XG.2000.1328-4	621-64-7	n-Nitroso-di-n-propylamine	ND	ug / L	1	1	12/04/00
X00460	XG.2000.1328-4	62-75-9	n-Nitroso-dimethyl-amine	ND	ug / L	1	10	12/04/00
X00460	XG.2000.1328-4	86-30-6	n-Nitrosodiphenylamine	ND	ug / L	1	1	12/04/00
X00460	XG.2000.1328-4	91-20-3	Naphthalene	ND	ug / L	1	1	12/04/00
X00460	XG.2000.1328-4	98-95-3	Nitrobenzene	ND	ug / L	1	1	12/04/00
X00460	XG.2000.1328-4	87-86-5	Pentachlorophenol	ND	ug / L	1	10	12/04/00
X00460	XG.2000.1328-4	85-01-8	Phenanthrene	ND	ug / L	1	1	12/04/00
X00460	XG.2000.1328-4	108-95-2	Phenol	ND	ug / L	1	10	12/04/00
X00460	XG.2000.1328-4	129-00-0	Pyrene	ND	ug / L	1	1	12/04/00
X00460	XG.2000.1328-4	110-86-1	Pyridine	ND	ug / L	1	10	12/04/00

0011269-02B **SW846 5030A/8015A GRO by GC/FID**

X00445	XG.2000.1317-10		Gasoline Range Organics	ND	mg / L	1	0.05	12/01/00

269-02B **SW846 8260A Purgeable VOCs by GC/MS**

X00447	XG.2000.1324-1	75-34-3	1,1 Dichloroethane	ND	ug / L	1	1	12/01/00
X00447	XG.2000.1324-1	75-34-3	1,1 Dichloroethene	ND	ug / L	1	1	12/01/00
X00447	XG.2000.1324-1	71-55-6	1,1,1 Trichloroethane	ND	ug / L	1	1	12/01/00
X00447	XG.2000.1324-1	630-20-6	1,1,1,2 Tetrachloroethane	ND	ug / L	1	1	12/01/00
X00447	XG.2000.1324-1	79-00-5	1,1,2 Trichloroethane	ND	ug / L	1	1	12/01/00
X00447	XG.2000.1324-1	79-34-5	1,1,2,2 Tetrachloroethane	ND	ug / L	1	1	12/01/00
X00447	XG.2000.1324-1	106-93-4	1,2 Dibromoethane (EDB)	ND	ug / L	1	1	12/01/00
X00447	XG.2000.1324-1	95-50-1	1,2 Dichlorobenzene	ND	ug / L	1	1	12/01/00
X00447	XG.2000.1324-1	107-06-2	1,2 Dichloroethane	ND	ug / L	1	1	12/01/00
X00447	XG.2000.1324-1	78-87-5	1,2 Dichloropropane	ND	ug / L	1	1	12/01/00
X00447	XG.2000.1324-1	96-18-4	1,2,3 Trichloropropane	ND	ug / L	1	1	12/01/00
X00447	XG.2000.1324-1	95-63-6	1,2,4-Trimethylbenzene	ND	ug / L	1	1	12/01/00
X00447	XG.2000.1324-1	541-73-1	1,3 Dichlorobenzene	ND	ug / L	1	1	12/01/00
X00447	XG.2000.1324-1	108-67-8	1,3,5-Trimethylbenzene	ND	ug / L	1	1	12/01/00
X00447	XG.2000.1324-1	764-41-0	1,4 Dichloro-2-butene	ND	ug / L	1	10	12/01/00
X00447	XG.2000.1324-1	106-46-7	1,4 Dichlorobenzene	ND	ug / L	1	1	12/01/00
X00447	XG.2000.1324-1	78-93-3	2-Butanone (MEK)	ND	ug / L	1	5	12/01/00
X00447	XG.2000.1324-1	110-75-8	2-Chloroethylvinylether	ND	ug / L	1	5	12/01/00
X00447	XG.2000.1324-1	591-78-6	2-Hexanone (MBK)	ND	ug / L	1	5	12/01/00
X00447	XG.2000.1324-1	108-10-1	4-Methyl-2-pentanone (MIBK)	ND	ug / L	1	5	12/01/00
X00447	XG.2000.1324-1	67-64-1	Acetone	ND	ug / L	1	10	12/01/00
X00447	XG.2000.1324-1	107-02-8	Acrolein	ND	ug / L	1	20	12/01/00
X00447	XG.2000.1324-1	107-13-1	Acrylonitrile	ND	ug / L	1	20	12/01/00
X00447	XG.2000.1324-1	71-43-2	Benzene	ND	ug / L	1	1	12/01/00
17	XG.2000.1324-1	75-27-4	Bromodichloromethane	ND	ug / L	1	1	12/01/00

Certificate of Analysis

Client: **CH2MHILL**

Project: **0011269** **160660 (TO.10) KAFB**

X00447	XG.2000.1324-1	75-25-2	Bromoform	ND	ug / L	1	1	12/01/00
X00447	XG.2000.1324-1	74-83-9	Bromomethane	ND	ug / L	1	5	12/01/00
X00447	XG.2000.1324-1	75-15-0	Carbon disulfide	ND	ug / L	1	5	12/01/00
X00447	XG.2000.1324-1	56-23-5	Carbon tetrachloride	ND	ug / L	1	1	12/01/00
X00447	XG.2000.1324-1	108-90-7	Chlorobenzene	ND	ug / L	1	1	12/01/00
X00447	XG.2000.1324-1	124-48-1	Chlorodibromomethane	ND	ug / L	1	1	12/01/00
X00447	XG.2000.1324-1	75-00-3	Chloroethane	ND	ug / L	1	5	12/01/00
X00447	XG.2000.1324-1	67-66-3	Chloroform	ND	ug / L	1	1	12/01/00
X00447	XG.2000.1324-1	74-87-3	Chloromethane	ND	ug / L	1	5	12/01/00
X00447	XG.2000.1324-1	156-59-2	cis-1,2 dichloroethene	ND	ug / L	1	1	12/01/00
X00447	XG.2000.1324-1	10061-01-5	cis-1,3 dichloropropene	ND	ug / L	1	1	12/01/00
X00447	XG.2000.1324-1	74-95-3	Dibromomethane	ND	ug / L	1	1	12/01/00
X00447	XG.2000.1324-1	97-63-2	Ethyl methacrylate	ND	ug / L	1	5	12/01/00
X00447	XG.2000.1324-1	100-41-4	Ethylbenzene	ND	ug / L	1	1	12/01/00
X00447	XG.2000.1324-1		Freon 113	ND	ug / L	1	5	12/01/00
X00447	XG.2000.1324-1	75-71-8	Freon 12	ND	ug / L	1	10	12/01/00
X00447	XG.2000.1324-1	74-88-4	Iodomethane	ND	ug / L	1	5	12/01/00
X00447	XG.2000.1324-1	1634-04-4	Methyl t-butyl ether (MTBE)	ND	ug / L	1	1	12/01/00
X00447	XG.2000.1324-1	75-09-2	Methylene chloride	ND	ug / L	1	10	12/01/00
X00447	XG.2000.1324-1	91-20-3	Naphthalene	ND	ug / L	1	5	12/01/00
X00447	XG.2000.1324-1	95-47-6	o-Xylene	ND	ug / L	1	1	12/01/00
X00447	XG.2000.1324-1	108-38-3/106-42	p/m Xylenes	ND	ug / L	1	2	12/01/00
X00447	XG.2000.1324-1	100-42-5	Styrene	ND	ug / L	1	1	12/0[illegible]
X00447	XG.2000.1324-1	156-60-5	t-1,2 Dichloroethene	ND	ug / L	1	1	12/01/[illegible]
X00447	XG.2000.1324-1	10061-02-6	t-1,3 Dichloropropene	ND	ug / L	1	1	12/01/00
X00447	XG.2000.1324-1	127-18-4	Tetrachloroethene	ND	ug / L	1	1	12/01/00
X00447	XG.2000.1324-1	108-88-3	Toluene	ND	ug / L	1	1	12/01/00
X00447	XG.2000.1324-1	79-01-6	Trichloroethene	ND	ug / L	1	1	12/01/00
X00447	XG.2000.1324-1	75-69-4	Trichlorofluoromethane	ND	ug / L	1	5	12/01/00
X00447	XG.2000.1324-1	108-05-4	Vinyl acetate	ND	ug / L	1	5	12/01/00
X00447	XG.2000.1324-1	75-01-4	Vinyl chloride	ND	ug / L	1	5	12/01/00

0011269-02C **SW846 ME/8015A Diesel Range Organics by GC/FID**

X00444	XG.2000.1315-2		Diesel Range Organics	ND	mg / L	1	25	12/01/00

Client Sample ID ***TRIP BLANK*** Sample Matrix ***H2O*** Sample Collected *11/29/00 15:00:00*

QC Group	Run Sequence	CAS #	Analyte	Result	Units	Dilution Factor	Detection Limit	Code	Run Date
0011269-03A		**SW846 8260A Purgeable VOCs by GC/MS**							
X00447	XG.2000.1330-10	75-34-3	1,1 Dichloroethane	ND	ug / L	1	1		12/05/00
X00447	XG.2000.1330-10	75-34-3	1,1 Dichloroethene	ND	ug / L	1	1		12/05/00
X00447	XG.2000.1330-10	71-55-6	1,1,1 Trichloroethane	ND	ug / L	1	1		12/05/00
X00447	XG.2000.1330-10	630-20-6	1,1,1,2 Tetrachloroethane	ND	ug / L	1	1		12/05/00
X00447	XG.2000.1330-10	79-00-5	1,1,2 Trichloroethane	ND	ug / L	1	1		12/05/00
X00447	XG.2000.1330-10	79-34-5	1,1,2,2 Tetrachloroethane	ND	ug / L	1	1		12/05/[illegible]

Certificate of Analysis

Client: **CH2MHILL**

Project: **0011269** **160660 (TO.10) KAFB**

X00447	XG.2000.1330-10	106-93-4	1,2 Dibromoethane (EDB)	ND	ug / L	1	1	12/05/00
X00447	XG.2000.1330-10	95-50-1	1,2 Dichlorobenzene	ND	ug / L	1	1	12/05/00
X00447	XG.2000.1330-10	107-06-2	1,2 Dichloroethane	ND	ug / L	1	1	12/05/00
X00447	XG.2000.1330-10	78-87-5	1,2 Dichloropropane	ND	ug / L	1	1	12/05/00
X00447	XG.2000.1330-10	96-18-4	1,2,3 Trichloropropane	ND	ug / L	1	1	12/05/00
X00447	XG.2000.1330-10	95-63-6	1,2,4-Trimethylbenzene	ND	ug / L	1	1	12/05/00
X00447	XG.2000.1330-10	541-73-1	1,3 Dichlorobenzene	ND	ug / L	1	1	12/05/00
X00447	XG.2000.1330-10	108-67-8	1,3,5-Trimethylbenzene	ND	ug / L	1	1	12/05/00
X00447	XG.2000.1330-10	764-41-0	1,4 Dichloro-2-butene	ND	ug / L	1	10	12/05/00
X00447	XG.2000.1330-10	106-46-7	1,4 Dichlorobenzene	ND	ug / L	1	1	12/05/00
X00447	XG.2000.1330-10	78-93-3	2-Butanone (MEK)	ND	ug / L	1	5	12/05/00
X00447	XG.2000.1330-10	110-75-8	2-Chloroethylvinylether	ND	ug / L	1	5	12/05/00
X00447	XG.2000.1330-10	591-78-6	2-Hexanone (MBK)	ND	ug / L	1	5	12/05/00
X00447	XG.2000.1330-10	108-10-1	4-Methyl-2-pentanone (MIBK)	ND	ug / L	1	5	12/05/00
X00447	XG.2000.1330-10	67-64-1	Acetone	ND	ug / L	1	10	12/05/00
X00447	XG.2000.1330-10	107-02-8	Acrolein	ND	ug / L	1	20	12/05/00
X00447	XG.2000.1330-10	107-13-1	Acrylonitrile	ND	ug / L	1	20	12/05/00
X00447	XG.2000.1330-10	71-43-2	Benzene	ND	ug / L	1	1	12/05/00
X00447	XG.2000.1330-10	75-27-4	Bromodichloromethane	ND	ug / L	1	1	12/05/00
X00447	XG.2000.1330-10	75-25-2	Bromoform	ND	ug / L	1	1	12/05/00
X00447	XG.2000.1330-10	74-83-9	Bromomethane	ND	ug / L	1	5	12/05/00
X00447	XG.2000.1330-10	75-15-0	Carbon disulfide	ND	ug / L	1	5	12/05/00
47	XG.2000.1330-10	56-23-5	Carbon tetrachloride	ND	ug / L	1	1	12/05/00
X00447	XG.2000.1330-10	108-90-7	Chlorobenzene	ND	ug / L	1	1	12/05/00
X00447	XG.2000.1330-10	124-48-1	Chlorodibromomethane	ND	ug / L	1	1	12/05/00
X00447	XG.2000.1330-10	75-00-3	Chloroethane	ND	ug / L	1	5	12/05/00
X00447	XG.2000.1330-10	67-66-3	Chloroform	ND	ug / L	1	1	12/05/00
X00447	XG.2000.1330-10	74-87-3	Chloromethane	ND	ug / L	1	5	12/05/00
X00447	XG.2000.1330-10	156-59-2	cis-1,2 dichloroethene	ND	ug / L	1	1	12/05/00
X00447	XG.2000.1330-10	10061-01-5	cis-1,3 dichloropropene	ND	ug / L	1	1	12/05/00
X00447	XG.2000.1330-10	74-95-3	Dibromomethane	ND	ug / L	1	1	12/05/00
X00447	XG.2000.1330-10	97-63-2	Ethyl methacrylate	ND	ug / L	1	5	12/05/00
X00447	XG.2000.1330-10	100-41-4	Ethylbenzene	ND	ug / L	1	1	12/05/00
X00447	XG.2000.1330-10		Freon 113	ND	ug / L	1	5	12/05/00
X00447	XG.2000.1330-10	75-71-8	Freon 12	ND	ug / L	1	10	12/05/00
X00447	XG.2000.1330-10	74-88-4	Iodomethane	ND	ug / L	1	5	12/05/00
X00447	XG.2000.1330-10	1634-04-4	Methyl t-butyl ether (MTBE)	ND	ug / L	1	1	12/05/00
X00447	XG.2000.1330-10	75-09-2	Methylene chloride	ND	ug / L	1	10	12/05/00
X00447	XG.2000.1330-10	91-20-3	Naphthalene	ND	ug / L	1	5	12/05/00
X00447	XG.2000.1330-10	95-47-6	o-Xylene	ND	ug / L	1	1	12/05/00
X00447	XG.2000.1330-10	108-38-3/106-42	p/m Xylenes	ND	ug / L	1	2	12/05/00
X00447	XG.2000.1330-10	100-42-5	Styrene	ND	ug / L	1	1	12/05/00
X00447	XG.2000.1330-10	156-60-5	t-1,2 Dichloroethene	ND	ug / L	1	1	12/05/00
X00447	XG.2000.1330-10	10061-02-6	t-1,3 Dichloropropene	ND	ug / L	1	1	12/05/00
X00447	XG.2000.1330-10	127-18-4	Tetrachloroethene	ND	ug / L	1	1	12/05/00
X00447	XG.2000.1330-10	108-88-3	Toluene	ND	ug / L	1	1	12/05/00
X00447	XG.2000.1330-10	79-01-6	Trichloroethene	ND	ug / L	1	1	12/05/00
447	XG.2000.1330-10	75-69-4	Trichlorofluoromethane	ND	ug / L	1	5	12/05/00

X00447	XG.2000.1330-10	108-05-4	Vinyl acetate	ND	ug / L	1	5	12/05/00
X00447	XG.2000.1330-10	75-01-4	Vinyl chloride	ND	ug / L	1	5	12/05/00

Client Sample ID ***5630*** Sample Matrix ***SOIL*** Sample Collected *11/10/00 15:00:00*

QC Group	Run Sequence	CAS #	Analyte	Result	Units	Dilution Factor	Detection Limit	Code	Run Date
0011269-04A		**SW846 5030A/8015A GRO by GC/FID**							
X00457	XG.2000.1317-7		Gasoline Range Organics	ND	mg / Kg	1	0.25		12/01/00
0011269-04B		**SW846 ME/8015A Diesel Range Organics by GC/FID**							
X00459	XG.2000.1315-9		Diesel Range Organics	ND	mg / Kg	1	25		12/01/00
0011269-04C		**SW846 8260A Purgeable VOCs by GC/MS**							
X00469	XG.2000.1359-6	75-34-3	1,1 Dichloroethane	ND	mg / Kg	1	0.005	2	12/11/00
X00469	XG.2000.1359-6	75-34-3	1,1 Dichloroethene	ND	mg / Kg	1	0.005	2	12/11/00
X00469	XG.2000.1359-6	71-55-6	1,1,1 Trichloroethane	ND	mg / Kg	1	0.005	2	12/11/00
X00469	XG.2000.1359-6	630-20-6	1,1,1,2 Tetrachloroethane	ND	mg / Kg	1	0.005	2	12/11/00
X00469	XG.2000.1359-6	79-00-5	1,1,2 Trichloroethane	ND	mg / Kg	1	0.005	2	12/11/00
X00469	XG.2000.1359-6	79-34-5	1,1,2,2 Tetrachloroethane	ND	mg / Kg	1	0.005	2	12/11/00
X00469	XG.2000.1359-6	106-93-4	1,2 Dibromoethane (EDB)	ND	mg / Kg	1	0.005	2	12/[illegible]
X00469	XG.2000.1359-6	95-50-1	1,2 Dichlorobenzene	ND	mg / Kg	1	0.005	2	12/[illegible]
X00469	XG.2000.1359-6	107-06-2	1,2 Dichloroethane	ND	mg / Kg	1	0.005	2	12/11/00
X00469	XG.2000.1359-6	78-87-5	1,2 Dichloropropane	ND	mg / Kg	1	0.005	2	12/11/00
X00469	XG.2000.1359-6	96-18-4	1,2,3 Trichloropropane	ND	mg / Kg	1	0.005	2	12/11/00
X00469	XG.2000.1359-6	95-63-6	1,2,4-Trimethylbenzene	ND	mg / Kg	1	0.005	2	12/11/00
X00469	XG.2000.1359-6	541-73-1	1,3 Dichlorobenzene	ND	mg / Kg	1	0.005	2	12/11/00
X00469	XG.2000.1359-6	108-67-8	1,3,5-Trimethylbenzene	ND	mg / Kg	1	0.005	2	12/11/00
X00469	XG.2000.1359-6	764-41-0	1,4 Dichloro-2-butene	ND	mg / Kg	1	0.05	2	12/11/00
X00469	XG.2000.1359-6	106-46-7	1,4 Dichlorobenzene	ND	mg / Kg	1	0.005	2	12/11/00
X00469	XG.2000.1359-6	78-93-3	2-Butanone (MEK)	ND	mg / Kg	1	0.025	2	12/11/00
X00469	XG.2000.1359-6	110-75-8	2-Chloroethylvinylether	ND	mg / Kg	1	0.025	2	12/11/00
X00469	XG.2000.1359-6	591-78-6	2-Hexanone (MBK)	ND	mg / Kg	1	0.025	2	12/11/00
X00469	XG.2000.1359-6	108-10-1	4-Methyl-2-pentanone (MIBK)	ND	mg / Kg	1	0.025	2	12/11/00
X00469	XG.2000.1359-6	67-64-1	Acetone	0.11	mg / Kg	1	0.05	2	12/11/00
X00469	XG.2000.1359-6	107-02-8	Acrolein	ND	mg / Kg	1	0.1	2	12/11/00
X00469	XG.2000.1359-6	107-13-1	Acrylonitrile	ND	mg / Kg	1	0.1	2	12/11/00
X00469	XG.2000.1359-6	71-43-2	Benzene	ND	mg / Kg	1	0.005	2	12/11/00
X00469	XG.2000.1359-6	75-27-4	Bromodichloromethane	ND	mg / Kg	1	0.005	2	12/11/00
X00469	XG.2000.1359-6	75-25-2	Bromoform	ND	mg / Kg	1	0.005	2	12/11/00
X00469	XG.2000.1359-6	74-83-9	Bromomethane	ND	mg / Kg	1	0.025	2	12/11/00
X00469	XG.2000.1359-6	75-15-0	Carbon disulfide	ND	mg / Kg	1	0.025	2	12/11/00
X00469	XG.2000.1359-6	56-23-5	Carbon tetrachloride	ND	mg / Kg	1	0.005	2	12/11/00
X00469	XG.2000.1359-6	108-90-7	Chlorobenzene	ND	mg / Kg	1	0.005	2	12/11/00
X00469	XG.2000.1359-6	124-48-1	Chlorodibromomethane	ND	mg / Kg	1	0.005	2	12/11/00
X00469	XG.2000.1359-6	75-00-3	Chloroethane	ND	mg / Kg	1	0.025	2	12/11/00
X00469	XG.2000.1359-6	67-66-3	Chloroform	ND	mg / Kg	1	0.005	2	12/[illegible]

Certificate of Analysis

t: **CH2MHILL**

Project: **0011269** **160660 (TO.10) KAFB**

X00469	XG.2000.1359-6	74-87-3	Chloromethane	ND	mg / Kg	1	0.025	2	12/11/00
X00469	XG.2000.1359-6	156-59-2	cis-1,2 dichloroethene	ND	mg / Kg	1	0.005	2	12/11/00
X00469	XG.2000.1359-6	10061-01-5	cis-1,3 dichloropropene	ND	mg / Kg	1	0.005	2	12/11/00
X00469	XG.2000.1359-6	74-95-3	Dibromomethane	ND	mg / Kg	1	0.005	2	12/11/00
X00469	XG.2000.1359-6	97-63-2	Ethyl methacrylate	ND	mg / Kg	1	0.025	2	12/11/00
X00469	XG.2000.1359-6	100-41-4	Ethylbenzene	ND	mg / Kg	1	0.005	2	12/11/00
X00469	XG.2000.1359-6		Freon 113	ND	mg / Kg	1	0.025	2	12/11/00
X00469	XG.2000.1359-6	75-71-8	Freon 12	ND	mg / Kg	1	0.05	2	12/11/00
X00469	XG.2000.1359-6	74-88-4	Iodomethane	ND	mg / Kg	1	0.025	2	12/11/00
X00469	XG.2000.1359-6	1634-04-4	Methyl t-butyl ether (MTBE)	ND	mg / Kg	1	0.005	2	12/11/00
X00469	XG.2000.1359-6	75-09-2	Methylene chloride	ND	mg / Kg	1	0.05	2	12/11/00
X00469	XG.2000.1359-6	91-20-3	Naphthalene	ND	mg / Kg	1	0.025	2	12/11/00
X00469	XG.2000.1359-6	95-47-6	o-Xylene	ND	mg / Kg	1	0.005	2	12/11/00
X00469	XG.2000.1359-6	108-38-3/106-42	p/m Xylenes	ND	mg / Kg	1	0.01	2	12/11/00
X00469	XG.2000.1359-6	100-42-5	Styrene	ND	mg / Kg	1	0.005	2	12/11/00
X00469	XG.2000.1359-6	156-60-5	t-1,2 Dichloroethene	ND	mg / Kg	1	0.005	2	12/11/00
X00469	XG.2000.1359-6	10061-02-6	t-1,3 Dichloropropene	ND	mg / Kg	1	0.005	2	12/11/00
X00469	XG.2000.1359-6	127-18-4	Tetrachloroethene	ND	mg / Kg	1	0.005	2	12/11/00
X00469	XG.2000.1359-6	108-88-3	Toluene	ND	mg / Kg	1	0.005	2	12/11/00
X00469	XG.2000.1359-6	79-01-6	Trichloroethene	ND	mg / Kg	1	0.005	2	12/11/00
X00469	XG.2000.1359-6	75-69-4	Trichlorofluoromethane	ND	mg / Kg	1	0.025	2	12/11/00
X00469	XG.2000.1359-6	108-05-4	Vinyl acetate	ND	mg / Kg	1	0.025	2	12/11/00
3	XG.2000.1359-6	75-01-4	Vinyl chloride	ND	mg / Kg	1	0.025	2	12/11/00

Client Sample ID ***6430*** Sample Matrix ***SOIL*** Sample Collected ***11/30/00 15:00:00***

QC Group	Run Sequence	CAS #	Analyte	Result	Units	Dilution Factor	Detection Limit	Code	Run Date
0011269-05A		**SW846 5030A/8015A GRO by GC/FID**							
X00457	XG.2000.1319-1		Gasoline Range Organics	ND	mg / Kg	1	0.25		12/01/00
0011269-05B		**SW846 ME/8015A Diesel Range Organics by GC/FID**							
X00459	XG.2000.1315-10		Diesel Range Organics	ND	mg / Kg	1	25		12/01/00
0011269-05C		**SW846 8260A Purgeable VOCs by GC/MS**							
X00454	XG.2000.1326-2	75-34-3	1,1 Dichloroethane	ND	mg / Kg	1	0.005	1	12/01/00
X00454	XG.2000.1326-2	75-34-3	1,1 Dichloroethene	ND	mg / Kg	1	0.005	1	12/01/00
X00454	XG.2000.1326-2	71-55-6	1,1,1 Trichloroethane	ND	mg / Kg	1	0.005	1	12/01/00
X00454	XG.2000.1326-2	630-20-6	1,1,1,2 Tetrachloroethane	ND	mg / Kg	1	0.005	1	12/01/00
X00454	XG.2000.1326-2	79-00-5	1,1,2 Trichloroethane	ND	mg / Kg	1	0.005	1	12/01/00
X00454	XG.2000.1326-2	79-34-5	1,1,2,2 Tetrachloroethane	ND	mg / Kg	1	0.005	1	12/01/00
X00454	XG.2000.1326-2	106-93-4	1,2 Dibromoethane (EDB)	ND	mg / Kg	1	0.005	1	12/01/00
X00454	XG.2000.1326-2	95-50-1	1,2 Dichlorobenzene	ND	mg / Kg	1	0.005	1	12/01/00
X00454	XG.2000.1326-2	107-06-2	1,2 Dichloroethane	ND	mg / Kg	1	0.005	1	12/01/00
X00454	XG.2000.1326-2	78-87-5	1,2 Dichloropropane	ND	mg / Kg	1	0.005	1	12/01/00
4	XG.2000.1326-2	96-18-4	1,2,3 Trichloropropane	ND	mg / Kg	1	0.005	1	12/01/00

Certificate of Analysis

Client: **CH2MHILL**

Project: **0011269** **160660 (TO.10) KAFB**

X00454	XG.2000.1326-2	95-63-6	1,2,4-Trimethylbenzene	ND	mg / Kg	1	0.005	1	12/01/00
X00454	XG.2000.1326-2	541-73-1	1,3 Dichlorobenzene	ND	mg / Kg	1	0.005	1	12/01/00
X00454	XG.2000.1326-2	108-67-8	1,3,5-Trimethylbenzene	ND	mg / Kg	1	0.005	1	12/01/00
X00454	XG.2000.1326-2	764-41-0	1,4 Dichloro-2-butene	ND	mg / Kg	1	0.05	1	12/01/00
X00454	XG.2000.1326-2	106-46-7	1,4 Dichlorobenzene	ND	mg / Kg	1	0.005	1	12/01/00
X00454	XG.2000.1326-2	78-93-3	2-Butanone (MEK)	ND	mg / Kg	1	0.025	1	12/01/00
X00454	XG.2000.1326-2	110-75-8	2-Chloroethylvinylether	ND	mg / Kg	1	0.025	1	12/01/00
X00454	XG.2000.1326-2	591-78-6	2-Hexanone (MBK)	ND	mg / Kg	1	0.025	1	12/01/00
X00454	XG.2000.1326-2	108-10-1	4-Methyl-2-pentanone (MIBK)	ND	mg / Kg	1	0.025	1	12/01/00
X00454	XG.2000.1326-2	67-64-1	Acetone	ND	mg / Kg	1	0.05	1	12/01/00
X00454	XG.2000.1326-2	107-02-8	Acrolein	ND	mg / Kg	1	0.1	1	12/01/00
X00454	XG.2000.1326-2	107-13-1	Acrylonitrile	ND	mg / Kg	1	0.1	1	12/01/00
X00454	XG.2000.1326-2	71-43-2	Benzene	ND	mg / Kg	1	0.005	1	12/01/00
X00454	XG.2000.1326-2	75-27-4	Bromodichloromethane	ND	mg / Kg	1	0.005	1	12/01/00
X00454	XG.2000.1326-2	75-25-2	Bromoform	ND	mg / Kg	1	0.005	1	12/01/00
X00454	XG.2000.1326-2	74-83-9	Bromomethane	ND	mg / Kg	1	0.025	1	12/01/00
X00454	XG.2000.1326-2	75-15-0	Carbon disulfide	ND	mg / Kg	1	0.025	1	12/01/00
X00454	XG.2000.1326-2	56-23-5	Carbon tetrachloride	ND	mg / Kg	1	0.005	1	12/01/00
X00454	XG.2000.1326-2	108-90-7	Chlorobenzene	ND	mg / Kg	1	0.005	1	12/01/00
X00454	XG.2000.1326-2	124-48-1	Chlorodibromomethane	ND	mg / Kg	1	0.005	1	12/01/00
X00454	XG.2000.1326-2	75-00-3	Chloroethane	ND	mg / Kg	1	0.025	1	12/01/00
X00454	XG.2000.1326-2	67-66-3	Chloroform	ND	mg / Kg	1	0.005	1	12/01/00
X00454	XG.2000.1326-2	74-87-3	Chloromethane	ND	mg / Kg	1	0.025	1	12/01/
X00454	XG.2000.1326-2	156-59-2	cis-1,2 dichloroethene	ND	mg / Kg	1	0.005	1	12/0
X00454	XG.2000.1326-2	10061-01-5	cis-1,3 dichloropropene	ND	mg / Kg	1	0.005	1	12/01/00
X00454	XG.2000.1326-2	74-95-3	Dibromomethane	ND	mg / Kg	1	0.005	1	12/01/00
X00454	XG.2000.1326-2	97-63-2	Ethyl methacrylate	ND	mg / Kg	1	0.025	1	12/01/00
X00454	XG.2000.1326-2	100-41-4	Ethylbenzene	ND	mg / Kg	1	0.005	1	12/01/00
X00454	XG.2000.1326-2		Freon 113	ND	mg / Kg	1	0.025	1	12/01/00
X00454	XG.2000.1326-2	75-71-8	Freon 12	ND	mg / Kg	1	0.05	1	12/01/00
X00454	XG.2000.1326-2	74-88-4	Iodomethane	ND	mg / Kg	1	0.025	1	12/01/00
X00454	XG.2000.1326-2	1634-04-4	Methyl t-butyl ether (MTBE)	ND	mg / Kg	1	0.005	1	12/01/00
X00454	XG.2000.1326-2	75-09-2	Methylene chloride	ND	mg / Kg	1	0.05	1	12/01/00
X00454	XG.2000.1326-2	91-20-3	Naphthalene	ND	mg / Kg	1	0.025	1	12/01/00
X00454	XG.2000.1326-2	95-47-6	o-Xylene	ND	mg / Kg	1	0.005	1	12/01/00
X00454	XG.2000.1326-2	108-38-3/106-42	p/m Xylenes	ND	mg / Kg	1	0.01	1	12/01/00
X00454	XG.2000.1326-2	100-42-5	Styrene	ND	mg / Kg	1	0.005	1	12/01/00
X00454	XG.2000.1326-2	156-60-5	t-1,2 Dichloroethene	ND	mg / Kg	1	0.005	1	12/01/00
X00454	XG.2000.1326-2	10061-02-6	t-1,3 Dichloropropene	ND	mg / Kg	1	0.005	1	12/01/00
X00454	XG.2000.1326-2	127-18-4	Tetrachloroethene	ND	mg / Kg	1	0.005	1	12/01/00
X00454	XG.2000.1326-2	108-88-3	Toluene	ND	mg / Kg	1	0.005	1	12/01/00
X00454	XG.2000.1326-2	79-01-6	Trichloroethene	ND	mg / Kg	1	0.005	1	12/01/00
X00454	XG.2000.1326-2	75-69-4	Trichlorofluoromethane	ND	mg / Kg	1	0.025	1	12/01/00
X00454	XG.2000.1326-2	108-05-4	Vinyl acetate	ND	mg / Kg	1	0.025	1	12/01/00
X00454	XG.2000.1326-2	75-01-4	Vinyl chloride	ND	mg / Kg	1	0.025	1	12/01/00

Certificate of Analysis

ıt: **CH2MHILL**

Project: **0011269** **160660 (TO.10) KAFB**

**** Sample specific Detection Limit is determined by multiplying the sample Dilution Factor by the listed Reporting Detection Limit. ****

**** ND = Not detected: less than the sample specific Detection Limit. Results relate only to the items tested. ****

footnote

1 Surrogate recovery for Dibromofluoromethane is out of criteria, low, due to matrix interference.

2 Sample was analyzed with headspace.

Quality Control Summary

Explanation of codes	
D	*Not applicable due to sample dilution*
L	*Not applicable due to MDL proximity*

Client: CH2MHILL
Project: 0011269 160660 (TO.10) KAFB

QC Type: **LCS: Lab Control Spike** QC Matrix: **SOLID**

QC Group	Run Sequence	CAS #	Analyte	Result	Units	Dilution Factor	Detection Limit	Code	Run Date
X00448-002		**SW846 5030A/8021B Purgeable VOCs by GC/PID**							
X00448	XG.2000.1303-8	71-43-2	Benzene	101	% Recovery	1	NA		11/21/00
X00448	XG.2000.1303-8	100-41-4	Ethylbenzene	101	% Recovery	1	NA		11/21/00
X00448	XG.2000.1303-8	95-47-6	o-Xylene	99	% Recovery	1	NA		11/21/00
X00448	XG.2000.1303-8	108-38-3/106-42	p/m-Xylenes	100	% Recovery	1	NA		11/21/00
X00448	XG.2000.1303-8	108-88-3	Toluene	99	% Recovery	1	NA		11/21/00
X00454-003		**SW846 8260A Purgeable VOCs by GC/MS**							
X00454	XG.2000.1313-3	75-34-3	1,1 Dichloroethene	113	% Recovery	1	NA		11/29/00
X00454	XG.2000.1313-3	106-46-7	1,4 Dichlorobenzene	100	% Recovery	1	NA		11/29/00
X00454	XG.2000.1313-3	71-43-2	Benzene	112	% Recovery	1	NA		11/29/00
X00454	XG.2000.1313-3	108-90-7	Chlorobenzene	107	% Recovery	1	NA		11/29/00
X00454	XG.2000.1313-3	108-88-3	Toluene	112	% Recovery	1	NA		11/29/00
X00454	XG.2000.1313-3	79-01-6	Trichloroethene	110	% Recovery	1	NA		11/29/00
X00457-002		**SW846 5030A/8015A GRO by GC/FID**							
X00457	XG.2000.1317-2		Gasoline Range Organics	88	% Recovery	1	NA		12/01/00
[illegible]59-002		**SW846 ME/8015A Diesel Range Organics by GC/FID**							
X00459	XG.2000.1315-4		Diesel Range Organics	98	% Recovery	1	NA		12/01/00
X00469-003		**SW846 8260A Purgeable VOCs by GC/MS**							
X00469	XG.2000.1359-3	75-34-3	1,1 Dichloroethene	107	% Recovery	1	NA		12/07/00
X00469	XG.2000.1359-3	106-46-7	1,4 Dichlorobenzene	100	% Recovery	1	NA		12/07/00
X00469	XG.2000.1359-3	71-43-2	Benzene	111	% Recovery	1	NA		12/07/00
X00469	XG.2000.1359-3	108-90-7	Chlorobenzene	109	% Recovery	1	NA		12/07/00
X00469	XG.2000.1359-3	108-88-3	Toluene	114	% Recovery	1	NA		12/07/00
X00469	XG.2000.1359-3	79-01-6	Trichloroethene	109	% Recovery	1	NA		12/07/00

QC Type: **LCSD: Lab Control Spike Duplicate Accuracy** QC Matrix: **SOLID**

QC Group	Run Sequence	CAS #	Analyte	Result	Units	Dilution Factor	Detection Limit	Code	Run Date
X00448-003		**SW846 5030A/8021B Purgeable VOCs by GC/PID**							
X00448	XG.2000.1303-9	71-43-2	Benzene	101	% Recovery	1	NA		11/21/00
X00448	XG.2000.1303-9	100-41-4	Ethylbenzene	102	% Recovery	1	NA		11/21/00
X00448	XG.2000.1303-9	95-47-6	o-Xylene	100	% Recovery	1	NA		11/21/00
X00448	XG.2000.1303-9	108-38-3/106-42	p/m-Xylenes	101	% Recovery	1	NA		11/21/00
X00448	XG.2000.1303-9	108-88-3	Toluene	99	% Recovery	1	NA		11/21/00
X00454-004		**SW846 8260A Purgeable VOCs by GC/MS**							
X00454	XG.2000.1313-4	75-34-3	1,1 Dichloroethene	107	% Recovery	1	NA		11/29/00
[illegible]54	XG.2000.1313-4	106-46-7	1,4 Dichlorobenzene	98	% Recovery	1	NA		11/29/00
[illegible]0454	XG.2000.1313-4	71-43-2	Benzene	108	% Recovery	1	NA		11/29/00

Quality Control Summary

Explanation of codes	
D	*Not applicable due to sample diluti*
L	*Not applicable due to MDL proxim*

Client: CH2MHILL

Project: 0011269 160660 (TO.10) KAFB

X00454	XG.2000.1313-4	108-90-7	Chlorobenzene	106	% Recovery	1	NA		11/29/00
X00454	XG.2000.1313-4	108-88-3	Toluene	109	% Recovery	1	NA		11/29/00
X00454	XG.2000.1313-4	79-01-6	Trichloroethene	108	% Recovery	1	NA		11/29/00
X00457-003		**SW846 5030A/8015A GRO by GC/FID**							
X00457	XG.2000.1317-3		Gasoline Range Organics	92	% Recovery	1	NA		12/01/00
X00459-003		**SW846 ME/8015A Diesel Range Organics by GC/FID**							
X00459	XG.2000.1315-5		Diesel Range Organics	102	% Recovery	1	NA		12/01/00
X00469-004		**SW846 8260A Purgeable VOCs by GC/MS**							
X00469	XG.2000.1359-4	75-34-3	1,1 Dichloroethene	107	% Recovery	1	NA		12/07/00
X00469	XG.2000.1359-4	106-46-7	1,4 Dichlorobenzene	100	% Recovery	1	NA		12/07/00
X00469	XG.2000.1359-4	71-43-2	Benzene	109	% Recovery	1	NA		12/07/00
X00469	XG.2000.1359-4	108-90-7	Chlorobenzene	107	% Recovery	1	NA		12/07/00
X00469	XG.2000.1359-4	108-88-3	Toluene	113	% Recovery	1	NA		12/07/00
X00469	XG.2000.1359-4	79-01-6	Trichloroethene	106	% Recovery	1	NA		12/07/00

QC Type **LCSD: Lab Control Spike Duplicate Precision** QC Matrix **SOLID**

QC Group	Run Sequence	CAS #	Analyte	Result	Units	Dilution Factor	Detection Limit	Code	Run Date
X00448-003		**SW846 5030A/8021B Purgeable VOCs by GC/PID**							
X00448	XG.2000.1303-9	71-43-2	Benzene	< 1	RPD	1	NA		11/21
X00448	XG.2000.1303-9	100-41-4	Ethylbenzene	< 1	RPD	1	NA		11/21
X00448	XG.2000.1303-9	95-47-6	o-Xylene	< 1	RPD	1	NA		11/21/00
X00448	XG.2000.1303-9	108-38-3/106-42	p/m-Xylenes	< 1	RPD	1	NA		11/21/00
X00448	XG.2000.1303-9	108-88-3	Toluene	< 1	RPD	1	NA		11/21/00
X00454-004		**SW846 8260A Purgeable VOCs by GC/MS**							
X00454	XG.2000.1313-4	75-34-3	1,1 Dichloroethene	5	RPD	1	NA		11/29/00
X00454	XG.2000.1313-4	106-46-7	1,4 Dichlorobenzene	1	RPD	1	NA		11/29/00
X00454	XG.2000.1313-4	71-43-2	Benzene	3	RPD	1	NA		11/29/00
X00454	XG.2000.1313-4	108-90-7	Chlorobenzene	1	RPD	1	NA		11/29/00
X00454	XG.2000.1313-4	108-88-3	Toluene	2	RPD	1	NA		11/29/00
X00454	XG.2000.1313-4	79-01-6	Trichloroethene	2	RPD	1	NA		11/29/00
X00457-003		**SW846 5030A/8015A GRO by GC/FID**							
X00457	XG.2000.1317-3		Gasoline Range Organics	4	RPD	1	NA		12/01/00
X00459-003		**SW846 ME/8015A Diesel Range Organics by GC/FID**							
X00459	XG.2000.1315-5		Diesel Range Organics	4	RPD	1	NA		12/01/00
X00469-004		**SW846 8260A Purgeable VOCs by GC/MS**							
X00469	XG.2000.1359-4	75-34-3	1,1 Dichloroethene	< 1	RPD	1	NA		12/07/00
X00469	XG.2000.1359-4	106-46-7	1,4 Dichlorobenzene	< 1	RPD	1	NA		12/07/00
X00469	XG.2000.1359-4	71-43-2	Benzene	1	RPD	1	NA		12/07/00
X00469	XG.2000.1359-4	108-90-7	Chlorobenzene	1	RPD	1	NA		12/07/00
X00469	XG.2000.1359-4	108-88-3	Toluene	1	RPD	1	NA		12/07/00
X00469	XG.2000.1359-4	79-01-6	Trichloroethene	2	RPD	1	NA		12/07/00

Quality Control Summary

Explanation of codes	
D	*Not applicable due to sample dilution*
L	*Not applicable due to MDL proximity*

Client: CH2MHILL

Project: 0011269 160660 (TO.10) KAFB

QC Type: **MB: Method Blank** QC Matrix: **SOLID**

QC Group	Run Sequence	CAS #	Analyte	Result	Units	Dilution Factor	Detection Limit	Code	Run Date
X00448-001		**SW846 5030A/8021B Purgeable VOCs by GC/PID**							
X00448	XG.2000.1303-7	71-43-2	Benzene	ND	mg / Kg	1	0.005		11/21/00
X00448	XG.2000.1303-7	100-41-4	Ethylbenzene	ND	mg / Kg	1	0.005		11/21/00
X00448	XG.2000.1303-7	95-47-6	o-Xylene	ND	mg / Kg	1	0.005		11/21/00
X00448	XG.2000.1303-7	108-38-3/106-42	p/m-Xylenes	ND	mg / Kg	1	0.01		11/21/00
X00448	XG.2000.1303-7	108-88-3	Toluene	ND	mg / Kg	1	0.005		11/21/00
X00448-008		**SW846 5030A/8021B Purgeable VOCs by GC/PID**							
X00448	XG.2000.1308-4	71-43-2	Benzene	ND	mg / Kg	1	0.005		11/28/00
X00448	XG.2000.1308-4	100-41-4	Ethylbenzene	ND	mg / Kg	1	0.005		11/28/00
X00448	XG.2000.1308-4	95-47-6	o-Xylene	ND	mg / Kg	1	0.005		11/28/00
X00448	XG.2000.1308-4	108-38-3/106-42	p/m-Xylenes	ND	mg / Kg	1	0.01		11/28/00
X00448	XG.2000.1308-4	108-88-3	Toluene	ND	mg / Kg	1	0.005		11/28/00
X00448-010		**SW846 5030A/8021B Purgeable VOCs by GC/PID**							
X00448	XG.2000.1312-1	71-43-2	Benzene	ND	mg / Kg	1	0.005		11/30/00
X00448	XG.2000.1312-1	100-41-4	Ethylbenzene	ND	mg / Kg	1	0.005		11/30/00
8	XG.2000.1312-1	95-47-6	o-Xylene	ND	mg / Kg	1	0.005		11/30/00
X00448	XG.2000.1312-1	108-38-3/106-42	p/m-Xylenes	ND	mg / Kg	1	0.01		11/30/00
X00448	XG.2000.1312-1	108-88-3	Toluene	ND	mg / Kg	1	0.005		11/30/00
X00448-013		**SW846 5030A/8021B Purgeable VOCs by GC/PID**							
X00448	XG.2000.1320-1	71-43-2	Benzene	ND	mg / Kg	1	0.005		12/01/00
X00448	XG.2000.1320-1	100-41-4	Ethylbenzene	ND	mg / Kg	1	0.005		12/01/00
X00448	XG.2000.1320-1	95-47-6	o-Xylene	ND	mg / Kg	1	0.005		12/01/00
X00448	XG.2000.1320-1	108-38-3/106-42	p/m-Xylenes	ND	mg / Kg	1	0.01		12/01/00
X00448	XG.2000.1320-1	108-88-3	Toluene	ND	mg / Kg	1	0.005		12/01/00
X00448-016		**SW846 5030A/8021B Purgeable VOCs by GC/PID**							
X00448	XG.2000.1337-3	71-43-2	Benzene	ND	mg / Kg	1	0.005		12/07/00
X00448	XG.2000.1337-3	100-41-4	Ethylbenzene	ND	mg / Kg	1	0.005		12/07/00
X00448	XG.2000.1337-3	95-47-6	o-Xylene	ND	mg / Kg	1	0.005		12/07/00
X00448	XG.2000.1337-3	108-38-3/106-42	p/m-Xylenes	ND	mg / Kg	1	0.01		12/07/00
X00448	XG.2000.1337-3	108-88-3	Toluene	ND	mg / Kg	1	0.005		12/07/00
X00448-023		**SW846 5030A/8021B Purgeable VOCs by GC/PID**							
X00448	XG.2000.1378-1	71-43-2	Benzene	ND	mg / Kg	1	0.005		12/18/00
X00448	XG.2000.1378-1	100-41-4	Ethylbenzene	ND	mg / Kg	1	0.005		12/18/00
X00448	XG.2000.1378-1	95-47-6	o-Xylene	ND	mg / Kg	1	0.005		12/18/00
X00448	XG.2000.1378-1	108-38-3/106-42	p/m-Xylenes	ND	mg / Kg	1	0.01		12/18/00
X00448	XG.2000.1378-1	108-88-3	Toluene	ND	mg / Kg	1	0.005		12/18/00
'54-001		**SW846 8260A Purgeable VOCs by GC/MS**							
54	XG.2000.1313-1	75-34-3	1,1 Dichloroethane	ND	mg / Kg	1	0.005		11/29/00

Quality Control Summary

Explanation of codes	
D	*Not applicable due to sample dilut*
L	*Not applicable due to MDL proxim*

Client: CH2MHILL

Project: 0011269 160660 (TO.10) KAFB

X00454	XG.2000.1313-1	75-34-3	1,1 Dichloroethene	ND	mg / Kg	1	0.005		11/29/00
X00454	XG.2000.1313-1	71-55-6	1,1,1 Trichloroethane	ND	mg / Kg	1	0.005		11/29/00
X00454	XG.2000.1313-1	630-20-6	1,1,1,2 Tetrachloroethane	ND	mg / Kg	1	0.005		11/29/00
X00454	XG.2000.1313-1	79-00-5	1,1,2 Trichloroethane	ND	mg / Kg	1	0.005		11/29/00
X00454	XG.2000.1313-1	79-34-5	1,1,2,2 Tetrachloroethane	ND	mg / Kg	1	0.005		11/29/00
X00454	XG.2000.1313-1	106-93-4	1,2 Dibromoethane (EDB)	ND	mg / Kg	1	0.005		11/29/00
X00454	XG.2000.1313-1	95-50-1	1,2 Dichlorobenzene	ND	mg / Kg	1	0.005		11/29/00
X00454	XG.2000.1313-1	107-06-2	1,2 Dichloroethane	ND	mg / Kg	1	0.005		11/29/00
X00454	XG.2000.1313-1	78-87-5	1,2 Dichloropropane	ND	mg / Kg	1	0.005		11/29/00
X00454	XG.2000.1313-1	96-18-4	1,2,3 Trichloropropane	ND	mg / Kg	1	0.005		11/29/00
X00454	XG.2000.1313-1	95-63-6	1,2,4-Trimethylbenzene	ND	mg / Kg	1	0.005		11/29/00
X00454	XG.2000.1313-1	541-73-1	1,3 Dichlorobenzene	ND	mg / Kg	1	0.005		11/29/00
X00454	XG.2000.1313-1	108-67-8	1,3,5-Trimethylbenzene	ND	mg / Kg	1	0.005		11/29/00
X00454	XG.2000.1313-1	764-41-0	1,4 Dichloro-2-butene	ND	mg / Kg	1	0.05		11/29/00
X00454	XG.2000.1313-1	106-46-7	1,4 Dichlorobenzene	ND	mg / Kg	1	0.005		11/29/00
X00454	XG.2000.1313-1	78-93-3	2-Butanone (MEK)	ND	mg / Kg	1	0.025		11/29/00
X00454	XG.2000.1313-1	110-75-8	2-Chloroethylvinylether	ND	mg / Kg	1	0.025		11/29/00
X00454	XG.2000.1313-1	591-78-6	2-Hexanone (MBK)	ND	mg / Kg	1	0.025		11/29/00
X00454	XG.2000.1313-1	108-10-1	4-Methyl-2-pentanone (MIBK)	ND	mg / Kg	1	0.025		11/29/00
X00454	XG.2000.1313-1	67-64-1	Acetone	ND	mg / Kg	1	0.05		11/29/00
X00454	XG.2000.1313-1	107-02-8	Acrolein	ND	mg / Kg	1	0.1		11/29/00
X00454	XG.2000.1313-1	107-13-1	Acrylonitrile	ND	mg / Kg	1	0.1		11/29/00
X00454	XG.2000.1313-1	71-43-2	Benzene	ND	mg / Kg	1	0.005		11/29/00
X00454	XG.2000.1313-1	75-27-4	Bromodichloromethane	ND	mg / Kg	1	0.005		11/29
X00454	XG.2000.1313-1	75-25-2	Bromoform	ND	mg / Kg	1	0.005		11/29
X00454	XG.2000.1313-1	74-83-9	Bromomethane	ND	mg / Kg	1	0.025		11/29/00
X00454	XG.2000.1313-1	75-15-0	Carbon disulfide	ND	mg / Kg	1	0.025		11/29/00
X00454	XG.2000.1313-1	56-23-5	Carbon tetrachloride	ND	mg / Kg	1	0.005		11/29/00
X00454	XG.2000.1313-1	108-90-7	Chlorobenzene	ND	mg / Kg	1	0.005		11/29/00
X00454	XG.2000.1313-1	124-48-1	Chlorodibromomethane	ND	mg / Kg	1	0.005		11/29/00
X00454	XG.2000.1313-1	75-00-3	Chloroethane	ND	mg / Kg	1	0.025		11/29/00
X00454	XG.2000.1313-1	67-66-3	Chloroform	ND	mg / Kg	1	0.005		11/29/00
X00454	XG.2000.1313-1	74-87-3	Chloromethane	ND	mg / Kg	1	0.025		11/29/00
X00454	XG.2000.1313-1	156-59-2	cis-1,2 dichloroethene	ND	mg / Kg	1	0.005		11/29/00
X00454	XG.2000.1313-1	10061-01-5	cis-1,3 dichloropropene	ND	mg / Kg	1	0.005		11/29/00
X00454	XG.2000.1313-1	74-95-3	Dibromomethane	ND	mg / Kg	1	0.005		11/29/00
X00454	XG.2000.1313-1	97-63-2	Ethyl methacrylate	ND	mg / Kg	1	0.025		11/29/00
X00454	XG.2000.1313-1	100-41-4	Ethylbenzene	ND	mg / Kg	1	0.005		11/29/00
X00454	XG.2000.1313-1		Freon 113	ND	mg / Kg	1	0.025		11/29/00
X00454	XG.2000.1313-1	75-71-8	Freon 12	ND	mg / Kg	1	0.05		11/29/00
X00454	XG.2000.1313-1	74-88-4	Iodomethane	ND	mg / Kg	1	0.025		11/29/00
X00454	XG.2000.1313-1	1634-04-4	Methyl t-butyl ether (MTBE)	ND	mg / Kg	1	0.005		11/29/00
X00454	XG.2000.1313-1	75-09-2	Methylene chloride	ND	mg / Kg	1	0.05		11/29/00
X00454	XG.2000.1313-1	91-20-3	Naphthalene	ND	mg / Kg	1	0.025		11/29/00
X00454	XG.2000.1313-1	95-47-6	o-Xylene	ND	mg / Kg	1	0.005		11/29/00
X00454	XG.2000.1313-1	108-38-3/106-42	p/m Xylenes	ND	mg / Kg	1	0.01		11/29/00
X00454	XG.2000.1313-1	100-42-5	Styrene	ND	mg / Kg	1	0.005		11/29/00
X00454	XG.2000.1313-1	156-60-5	t-1,2 Dichloroethene	ND	mg / Kg	1	0.005		11/29/00
X00454	XG.2000.1313-1	10061-02-6	t-1,3 Dichloropropene	ND	mg / Kg	1	0.005		11/29
X00454	XG.2000.1313-1	127-18-4	Tetrachloroethene	ND	mg / Kg	1	0.005		11/29

Quality Control Summary

Explanation of codes	
D	*Not applicable due to sample dilution*
L	*Not applicable due to MDL proximity*

nt: CH2MHILL

ject: 0011269 160660 (TO.10) KAFB

X00454	XG.2000.1313-1	108-88-3	Toluene	ND	mg / Kg	1	0.005		11/29/00
X00454	XG.2000.1313-1	79-01-6	Trichloroethene	ND	mg / Kg	1	0.005		11/29/00
X00454	XG.2000.1313-1	75-69-4	Trichlorofluoromethane	ND	mg / Kg	1	0.025		11/29/00
X00454	XG.2000.1313-1	108-05-4	Vinyl acetate	ND	mg / Kg	1	0.025		11/29/00
X00454	XG.2000.1313-1	75-01-4	Vinyl chloride	ND	mg / Kg	1	0.025		11/29/00

X00454-010 **SW846 8260A Purgeable VOCs by GC/MS**

X00454	XG.2000.1313-10	75-34-3	1,1 Dichloroethane	ND	mg / Kg	1	0.005		11/30/00
X00454	XG.2000.1313-10	75-34-3	1,1 Dichloroethene	ND	mg / Kg	1	0.005		11/30/00
X00454	XG.2000.1313-10	71-55-6	1,1,1 Trichloroethane	ND	mg / Kg	1	0.005		11/30/00
X00454	XG.2000.1313-10	630-20-6	1,1,1,2 Tetrachloroethane	ND	mg / Kg	1	0.005		11/30/00
X00454	XG.2000.1313-10	79-00-5	1,1,2 Trichloroethane	ND	mg / Kg	1	0.005		11/30/00
X00454	XG.2000.1313-10	79-34-5	1,1,2,2 Tetrachloroethane	ND	mg / Kg	1	0.005		11/30/00
X00454	XG.2000.1313-10	106-93-4	1,2 Dibromoethane (EDB)	ND	mg / Kg	1	0.005		11/30/00
X00454	XG.2000.1313-10	95-50-1	1,2 Dichlorobenzene	ND	mg / Kg	1	0.005		11/30/00
X00454	XG.2000.1313-10	107-06-2	1,2 Dichloroethane	ND	mg / Kg	1	0.005		11/30/00
X00454	XG.2000.1313-10	78-87-5	1,2 Dichloropropane	ND	mg / Kg	1	0.005		11/30/00
X00454	XG.2000.1313-10	96-18-4	1,2,3 Trichloropropane	ND	mg / Kg	1	0.005		11/30/00
X00454	XG.2000.1313-10	95-63-6	1,2,4-Trimethylbenzene	ND	mg / Kg	1	0.005		11/30/00
X00454	XG.2000.1313-10	541-73-1	1,3 Dichlorobenzene	ND	mg / Kg	1	0.005		11/30/00
X00454	XG.2000.1313-10	108-67-8	1,3,5-Trimethylbenzene	ND	mg / Kg	1	0.005		11/30/00
X00454	XG.2000.1313-10	764-41-0	1,4 Dichloro-2-butene	ND	mg / Kg	1	0.05		11/30/00
X00454	XG.2000.1313-10	106-46-7	1,4 Dichlorobenzene	ND	mg / Kg	1	0.005		11/30/00
54	XG.2000.1313-10	78-93-3	2-Butanone (MEK)	ND	mg / Kg	1	0.025		11/30/00
54	XG.2000.1313-10	110-75-8	2-Chloroethylvinylether	ND	mg / Kg	1	0.025		11/30/00
X00454	XG.2000.1313-10	591-78-6	2-Hexanone (MBK)	ND	mg / Kg	1	0.025		11/30/00
X00454	XG.2000.1313-10	108-10-1	4-Methyl-2-pentanone (MIBK)	ND	mg / Kg	1	0.025		11/30/00
X00454	XG.2000.1313-10	67-64-1	Acetone	ND	mg / Kg	1	0.05		11/30/00
X00454	XG.2000.1313-10	107-02-8	Acrolein	ND	mg / Kg	1	0.1		11/30/00
X00454	XG.2000.1313-10	107-13-1	Acrylonitrile	ND	mg / Kg	1	0.1		11/30/00
X00454	XG.2000.1313-10	71-43-2	Benzene	ND	mg / Kg	1	0.005		11/30/00
X00454	XG.2000.1313-10	75-27-4	Bromodichloromethane	ND	mg / Kg	1	0.005		11/30/00
X00454	XG.2000.1313-10	75-25-2	Bromoform	ND	mg / Kg	1	0.005		11/30/00
X00454	XG.2000.1313-10	74-83-9	Bromomethane	ND	mg / Kg	1	0.025		11/30/00
X00454	XG.2000.1313-10	75-15-0	Carbon disulfide	ND	mg / Kg	1	0.025		11/30/00
X00454	XG.2000.1313-10	56-23-5	Carbon tetrachloride	ND	mg / Kg	1	0.005		11/30/00
X00454	XG.2000.1313-10	108-90-7	Chlorobenzene	ND	mg / Kg	1	0.005		11/30/00
X00454	XG.2000.1313-10	124-48-1	Chlorodibromomethane	ND	mg / Kg	1	0.005		11/30/00
X00454	XG.2000.1313-10	75-00-3	Chloroethane	ND	mg / Kg	1	0.025		11/30/00
X00454	XG.2000.1313-10	67-66-3	Chloroform	ND	mg / Kg	1	0.005		11/30/00
X00454	XG.2000.1313-10	74-87-3	Chloromethane	ND	mg / Kg	1	0.025		11/30/00
X00454	XG.2000.1313-10	156-59-2	cis-1,2 dichloroethene	ND	mg / Kg	1	0.005		11/30/00
X00454	XG.2000.1313-10	10061-01-5	cis-1,3 dichloropropene	ND	mg / Kg	1	0.005		11/30/00
X00454	XG.2000.1313-10	74-95-3	Dibromomethane	ND	mg / Kg	1	0.005		11/30/00
X00454	XG.2000.1313-10	97-63-2	Ethyl methacrylate	ND	mg / Kg	1	0.025		11/30/00
X00454	XG.2000.1313-10	100-41-4	Ethylbenzene	ND	mg / Kg	1	0.005		11/30/00
X00454	XG.2000.1313-10		Freon 113	ND	mg / Kg	1	0.025		11/30/00
X00454	XG.2000.1313-10	75-71-8	Freon 12	ND	mg / Kg	1	0.05		11/30/00
X00454	XG.2000.1313-10	74-88-4	Iodomethane	ND	mg / Kg	1	0.025		11/30/00
54	XG.2000.1313-10	1634-04-4	Methyl t-butyl ether (MTBE)	ND	mg / Kg	1	0.005		11/30/00
454	XG.2000.1313-10	75-09-2	Methylene chloride	ND	mg / Kg	1	0.05		11/30/00

Quality Control Summary

Client: CH2MHILL

Project: 0011269 160660 (TO.10) KAFB

Explanation of codes	
D	*Not applicable due to sample dilut*
L	*Not applicable due to MDL proximi*

X00454	XG.2000.1313-10	91-20-3	Naphthalene	ND	mg / Kg	1	0.025		11/30/00
X00454	XG.2000.1313-10	95-47-6	o-Xylene	ND	mg / Kg	1	0.005		11/30/00
X00454	XG.2000.1313-10	108-38-3/106-42	p/m Xylenes	ND	mg / Kg	1	0.01		11/30/00
X00454	XG.2000.1313-10	100-42-5	Styrene	ND	mg / Kg	1	0.005		11/30/00
X00454	XG.2000.1313-10	156-60-5	t-1,2 Dichloroethene	ND	mg / Kg	1	0.005		11/30/00
X00454	XG.2000.1313-10	10061-02-6	t-1,3 Dichloropropene	ND	mg / Kg	1	0.005		11/30/00
X00454	XG.2000.1313-10	127-18-4	Tetrachloroethene	ND	mg / Kg	1	0.005		11/30/00
X00454	XG.2000.1313-10	108-88-3	Toluene	ND	mg / Kg	1	0.005		11/30/00
X00454	XG.2000.1313-10	79-01-6	Trichloroethene	ND	mg / Kg	1	0.005		11/30/00
X00454	XG.2000.1313-10	75-69-4	Trichlorofluoromethane	ND	mg / Kg	1	0.025		11/30/00
X00454	XG.2000.1313-10	108-05-4	Vinyl acetate	ND	mg / Kg	1	0.025		11/30/00
X00454	XG.2000.1313-10	75-01-4	Vinyl chloride	ND	mg / Kg	1	0.025		11/30/00
X00454-018		**SW846 8260A Purgeable VOCs by GC/MS**							
X00454	XG.2000.1325-8	75-34-3	1,1 Dichloroethane	ND	mg / Kg	1	0.005		12/01/00
X00454	XG.2000.1326-1	75-34-3	1,1 Dichloroethane	ND	mg / Kg	1	0.005		12/01/00
X00454	XG.2000.1325-8	75-34-3	1,1 Dichloroethene	ND	mg / Kg	1	0.005		12/01/00
X00454	XG.2000.1326-1	75-34-3	1,1 Dichloroethene	ND	mg / Kg	1	0.005		12/01/00
X00454	XG.2000.1325-8	71-55-6	1,1,1 Trichloroethane	ND	mg / Kg	1	0.005		12/01/00
X00454	XG.2000.1326-1	71-55-6	1,1,1 Trichloroethane	ND	mg / Kg	1	0.005		12/01/00
X00454	XG.2000.1325-8	630-20-6	1,1,1,2 Tetrachloroethane	ND	mg / Kg	1	0.005		12/01/00
X00454	XG.2000.1326-1	630-20-6	1,1,1,2 Tetrachloroethane	ND	mg / Kg	1	0.005		12/01/00
X00454	XG.2000.1325-8	79-00-5	1,1,2 Trichloroethane	ND	mg / Kg	1	0.005		12/01/00
X00454	XG.2000.1326-1	79-00-5	1,1,2 Trichloroethane	ND	mg / Kg	1	0.005		12/01
X00454	XG.2000.1325-8	79-34-5	1,1,2,2 Tetrachloroethane	ND	mg / Kg	1	0.005		12/01
X00454	XG.2000.1326-1	79-34-5	1,1,2,2 Tetrachloroethane	ND	mg / Kg	1	0.005		12/01/00
X00454	XG.2000.1325-8	106-93-4	1,2 Dibromoethane (EDB)	ND	mg / Kg	1	0.005		12/01/00
X00454	XG.2000.1326-1	106-93-4	1,2 Dibromoethane (EDB)	ND	mg / Kg	1	0.005		12/01/00
X00454	XG.2000.1325-8	95-50-1	1,2 Dichlorobenzene	ND	mg / Kg	1	0.005		12/01/00
X00454	XG.2000.1326-1	95-50-1	1,2 Dichlorobenzene	ND	mg / Kg	1	0.005		12/01/00
X00454	XG.2000.1325-8	107-06-2	1,2 Dichloroethane	ND	mg / Kg	1	0.005		12/01/00
X00454	XG.2000.1326-1	107-06-2	1,2 Dichloroethane	ND	mg / Kg	1	0.005		12/01/00
X00454	XG.2000.1325-8	78-87-5	1,2 Dichloropropane	ND	mg / Kg	1	0.005		12/01/00
X00454	XG.2000.1326-1	78-87-5	1,2 Dichloropropane	ND	mg / Kg	1	0.005		12/01/00
X00454	XG.2000.1325-8	96-18-4	1,2,3 Trichloropropane	ND	mg / Kg	1	0.005		12/01/00
X00454	XG.2000.1326-1	96-18-4	1,2,3 Trichloropropane	ND	mg / Kg	1	0.005		12/01/00
X00454	XG.2000.1325-8	95-63-6	1,2,4-Trimethylbenzene	ND	mg / Kg	1	0.005		12/01/00
X00454	XG.2000.1326-1	95-63-6	1,2,4-Trimethylbenzene	ND	mg / Kg	1	0.005		12/01/00
X00454	XG.2000.1325-8	541-73-1	1,3 Dichlorobenzene	ND	mg / Kg	1	0.005		12/01/00
X00454	XG.2000.1326-1	541-73-1	1,3 Dichlorobenzene	ND	mg / Kg	1	0.005		12/01/00
X00454	XG.2000.1325-8	108-67-8	1,3,5-Trimethylbenzene	ND	mg / Kg	1	0.005		12/01/00
X00454	XG.2000.1326-1	108-67-8	1,3,5-Trimethylbenzene	ND	mg / Kg	1	0.005		12/01/00
X00454	XG.2000.1325-8	764-41-0	1,4 Dichloro-2-butene	ND	mg / Kg	1	0.05		12/01/00
X00454	XG.2000.1326-1	764-41-0	1,4 Dichloro-2-butene	ND	mg / Kg	1	0.05		12/01/00
X00454	XG.2000.1325-8	106-46-7	1,4 Dichlorobenzene	ND	mg / Kg	1	0.005		12/01/00
X00454	XG.2000.1326-1	106-46-7	1,4 Dichlorobenzene	ND	mg / Kg	1	0.005		12/01/00
X00454	XG.2000.1325-8	78-93-3	2-Butanone (MEK)	ND	mg / Kg	1	0.025		12/01/00
X00454	XG.2000.1326-1	78-93-3	2-Butanone (MEK)	ND	mg / Kg	1	0.025		12/01/00
X00454	XG.2000.1325-8	110-75-8	2-Chloroethylvinylether	ND	mg / Kg	1	0.025		12/01/00
X00454	XG.2000.1326-1	110-75-8	2-Chloroethylvinylether	ND	mg / Kg	1	0.025		12/01

Quality Control Summary

Explanation of codes	
D	*Not applicable due to sample dilution*
L	*Not applicable due to MDL proximity*

Client: CH2MHILL

Project: 0011269 160660 (TO.10) KAFB

X00454	XG.2000.1325-8	591-78-6	2-Hexanone (MBK)	ND	mg / Kg	1	0.025		12/01/00
X00454	XG.2000.1326-1	591-78-6	2-Hexanone (MBK)	ND	mg / Kg	1	0.025		12/01/00
X00454	XG.2000.1325-8	108-10-1	4-Methyl-2-pentanone (MIBK)	ND	mg / Kg	1	0.025		12/01/00
X00454	XG.2000.1326-1	108-10-1	4-Methyl-2-pentanone (MIBK)	ND	mg / Kg	1	0.025		12/01/00
X00454	XG.2000.1325-8	67-64-1	Acetone	ND	mg / Kg	1	0.05		12/01/00
X00454	XG.2000.1326-1	67-64-1	Acetone	ND	mg / Kg	1	0.05		12/01/00
X00454	XG.2000.1325-8	107-02-8	Acrolein	ND	mg / Kg	1	0.1		12/01/00
X00454	XG.2000.1326-1	107-02-8	Acrolein	ND	mg / Kg	1	0.1		12/01/00
X00454	XG.2000.1325-8	107-13-1	Acrylonitrile	ND	mg / Kg	1	0.1		12/01/00
X00454	XG.2000.1326-1	107-13-1	Acrylonitrile	ND	mg / Kg	1	0.1		12/01/00
X00454	XG.2000.1325-8	71-43-2	Benzene	ND	mg / Kg	1	0.005		12/01/00
X00454	XG.2000.1326-1	71-43-2	Benzene	ND	mg / Kg	1	0.005		12/01/00
X00454	XG.2000.1325-8	75-27-4	Bromodichloromethane	ND	mg / Kg	1	0.005		12/01/00
X00454	XG.2000.1326-1	75-27-4	Bromodichloromethane	ND	mg / Kg	1	0.005		12/01/00
X00454	XG.2000.1325-8	75-25-2	Bromoform	ND	mg / Kg	1	0.005		12/01/00
X00454	XG.2000.1326-1	75-25-2	Bromoform	ND	mg / Kg	1	0.005		12/01/00
X00454	XG.2000.1325-8	74-83-9	Bromomethane	ND	mg / Kg	1	0.025		12/01/00
X00454	XG.2000.1326-1	74-83-9	Bromomethane	ND	mg / Kg	1	0.025		12/01/00
X00454	XG.2000.1325-8	75-15-0	Carbon disulfide	ND	mg / Kg	1	0.025		12/01/00
X00454	XG.2000.1326-1	75-15-0	Carbon disulfide	ND	mg / Kg	1	0.025		12/01/00
X00454	XG.2000.1325-8	56-23-5	Carbon tetrachloride	ND	mg / Kg	1	0.005		12/01/00
X00454	XG.2000.1326-1	56-23-5	Carbon tetrachloride	ND	mg / Kg	1	0.005		12/01/00
X00454	XG.2000.1325-8	108-90-7	Chlorobenzene	ND	mg / Kg	1	0.005		12/01/00
4	XG.2000.1326-1	108-90-7	Chlorobenzene	ND	mg / Kg	1	0.005		12/01/00
X00454	XG.2000.1325-8	124-48-1	Chlorodibromomethane	ND	mg / Kg	1	0.005		12/01/00
X00454	XG.2000.1326-1	124-48-1	Chlorodibromomethane	ND	mg / Kg	1	0.005		12/01/00
X00454	XG.2000.1325-8	75-00-3	Chloroethane	ND	mg / Kg	1	0.025		12/01/00
X00454	XG.2000.1326-1	75-00-3	Chloroethane	ND	mg / Kg	1	0.025		12/01/00
X00454	XG.2000.1325-8	67-66-3	Chloroform	ND	mg / Kg	1	0.005		12/01/00
X00454	XG.2000.1326-1	67-66-3	Chloroform	ND	mg / Kg	1	0.005		12/01/00
X00454	XG.2000.1325-8	74-87-3	Chloromethane	ND	mg / Kg	1	0.025		12/01/00
X00454	XG.2000.1326-1	74-87-3	Chloromethane	ND	mg / Kg	1	0.025		12/01/00
X00454	XG.2000.1325-8	156-59-2	cis-1,2 dichloroethene	ND	mg / Kg	1	0.005		12/01/00
X00454	XG.2000.1326-1	156-59-2	cis-1,2 dichloroethene	ND	mg / Kg	1	0.005		12/01/00
X00454	XG.2000.1325-8	10061-01-5	cis-1,3 dichloropropene	ND	mg / Kg	1	0.005		12/01/00
X00454	XG.2000.1326-1	10061-01-5	cis-1,3 dichloropropene	ND	mg / Kg	1	0.005		12/01/00
X00454	XG.2000.1325-8	74-95-3	Dibromomethane	ND	mg / Kg	1	0.005		12/01/00
X00454	XG.2000.1326-1	74-95-3	Dibromomethane	ND	mg / Kg	1	0.005		12/01/00
X00454	XG.2000.1325-8	97-63-2	Ethyl methacrylate	ND	mg / Kg	1	0.025		12/01/00
X00454	XG.2000.1326-1	97-63-2	Ethyl methacrylate	ND	mg / Kg	1	0.025		12/01/00
X00454	XG.2000.1325-8	100-41-4	Ethylbenzene	ND	mg / Kg	1	0.005		12/01/00
X00454	XG.2000.1326-1	100-41-4	Ethylbenzene	ND	mg / Kg	1	0.005		12/01/00
X00454	XG.2000.1325-8		Freon 113	ND	mg / Kg	1	0.025		12/01/00
X00454	XG.2000.1326-1		Freon 113	ND	mg / Kg	1	0.025		12/01/00
X00454	XG.2000.1325-8	75-71-8	Freon 12	ND	mg / Kg	1	0.05		12/01/00
X00454	XG.2000.1326-1	75-71-8	Freon 12	ND	mg / Kg	1	0.05		12/01/00
X00454	XG.2000.1325-8	74-88-4	Iodomethane	ND	mg / Kg	1	0.025		12/01/00
X00454	XG.2000.1326-1	74-88-4	Iodomethane	ND	mg / Kg	1	0.025		12/01/00
454	XG.2000.1325-8	1634-04-4	Methyl t-butyl ether (MTBE)	ND	mg / Kg	1	0.005		12/01/00
54	XG.2000.1326-1	1634-04-4	Methyl t-butyl ether (MTBE)	ND	mg / Kg	1	0.005		12/01/00
X00454	XG.2000.1325-8	75-09-2	Methylene chloride	ND	mg / Kg	1	0.05		12/01/00

Quality Control Summary

Client: CH2MHILL

Project: 0011269 160660 (TO.10) KAFB

Explanation of codes	
D	*Not applicable due to sample diluti*
L	*Not applicable due to MDL proxim*

X00454	XG.2000.1326-1	75-09-2	Methylene chloride	ND	mg / Kg	1	0.05		12/01/00
X00454	XG.2000.1325-8	91-20-3	Naphthalene	ND	mg / Kg	1	0.025		12/01/00
X00454	XG.2000.1326-1	91-20-3	Naphthalene	ND	mg / Kg	1	0.025		12/01/00
X00454	XG.2000.1325-8	95-47-6	o-Xylene	ND	mg / Kg	1	0.005		12/01/00
X00454	XG.2000.1326-1	95-47-6	o-Xylene	ND	mg / Kg	1	0.005		12/01/00
X00454	XG.2000.1325-8	108-38-3/106-42	p/m Xylenes	ND	mg / Kg	1	0.01		12/01/00
X00454	XG.2000.1326-1	108-38-3/106-42	p/m Xylenes	ND	mg / Kg	1	0.01		12/01/00
X00454	XG.2000.1325-8	100-42-5	Styrene	ND	mg / Kg	1	0.005		12/01/00
X00454	XG.2000.1326-1	100-42-5	Styrene	ND	mg / Kg	1	0.005		12/01/00
X00454	XG.2000.1325-8	156-60-5	t-1,2 Dichloroethene	ND	mg / Kg	1	0.005		12/01/00
X00454	XG.2000.1326-1	156-60-5	t-1,2 Dichloroethene	ND	mg / Kg	1	0.005		12/01/00
X00454	XG.2000.1325-8	10061-02-6	t-1,3 Dichloropropene	ND	mg / Kg	1	0.005		12/01/00
X00454	XG.2000.1326-1	10061-02-6	t-1,3 Dichloropropene	ND	mg / Kg	1	0.005		12/01/00
X00454	XG.2000.1325-8	127-18-4	Tetrachloroethene	ND	mg / Kg	1	0.005		12/01/00
X00454	XG.2000.1326-1	127-18-4	Tetrachloroethene	ND	mg / Kg	1	0.005		12/01/00
X00454	XG.2000.1325-8	108-88-3	Toluene	ND	mg / Kg	1	0.005		12/01/00
X00454	XG.2000.1326-1	108-88-3	Toluene	ND	mg / Kg	1	0.005		12/01/00
X00454	XG.2000.1325-8	79-01-6	Trichloroethene	ND	mg / Kg	1	0.005		12/01/00
X00454	XG.2000.1326-1	79-01-6	Trichloroethene	ND	mg / Kg	1	0.005		12/01/00
X00454	XG.2000.1325-8	75-69-4	Trichlorofluoromethane	ND	mg / Kg	1	0.025		12/01/00
X00454	XG.2000.1326-1	75-69-4	Trichlorofluoromethane	ND	mg / Kg	1	0.025		12/01/00
X00454	XG.2000.1325-8	108-05-4	Vinyl acetate	ND	mg / Kg	1	0.025		12/01/00
X00454	XG.2000.1326-1	108-05-4	Vinyl acetate	ND	mg / Kg	1	0.025		12/01
X00454	XG.2000.1325-8	75-01-4	Vinyl chloride	ND	mg / Kg	1	0.025		12/01
X00454	XG.2000.1326-1	75-01-4	Vinyl chloride	ND	mg / Kg	1	0.025		12/01/00
X00454-028		**SW846 8260A Purgeable VOCs by GC/MS**							
X00454	XG.2000.1350-1	75-34-3	1,1 Dichloroethane	ND	mg / Kg	1	0.005		12/07/00
X00454	XG.2000.1350-1	75-34-3	1,1 Dichloroethene	ND	mg / Kg	1	0.005		12/07/00
X00454	XG.2000.1350-1	71-55-6	1,1,1 Trichloroethane	ND	mg / Kg	1	0.005		12/07/00
X00454	XG.2000.1350-1	630-20-6	1,1,1,2 Tetrachloroethane	ND	mg / Kg	1	0.005		12/07/00
X00454	XG.2000.1350-1	79-00-5	1,1,2 Trichloroethane	ND	mg / Kg	1	0.005		12/07/00
X00454	XG.2000.1350-1	79-34-5	1,1,2,2 Tetrachloroethane	ND	mg / Kg	1	0.005		12/07/00
X00454	XG.2000.1350-1	106-93-4	1,2 Dibromoethane (EDB)	ND	mg / Kg	1	0.005		12/07/00
X00454	XG.2000.1350-1	95-50-1	1,2 Dichlorobenzene	ND	mg / Kg	1	0.005		12/07/00
X00454	XG.2000.1350-1	107-06-2	1,2 Dichloroethane	ND	mg / Kg	1	0.005		12/07/00
X00454	XG.2000.1350-1	78-87-5	1,2 Dichloropropane	ND	mg / Kg	1	0.005		12/07/00
X00454	XG.2000.1350-1	96-18-4	1,2,3 Trichloropropane	ND	mg / Kg	1	0.005		12/07/00
X00454	XG.2000.1350-1	95-63-6	1,2,4-Trimethylbenzene	ND	mg / Kg	1	0.005		12/07/00
X00454	XG.2000.1350-1	541-73-1	1,3 Dichlorobenzene	ND	mg / Kg	1	0.005		12/07/00
X00454	XG.2000.1350-1	108-67-8	1,3,5-Trimethylbenzene	ND	mg / Kg	1	0.005		12/07/00
X00454	XG.2000.1350-1	764-41-0	1,4 Dichloro-2-butene	ND	mg / Kg	1	0.05		12/07/00
X00454	XG.2000.1350-1	106-46-7	1,4 Dichlorobenzene	ND	mg / Kg	1	0.005		12/07/00
X00454	XG.2000.1350-1	78-93-3	2-Butanone (MEK)	ND	mg / Kg	1	0.025		12/07/00
X00454	XG.2000.1350-1	110-75-8	2-Chloroethylvinylether	ND	mg / Kg	1	0.025		12/07/00
X00454	XG.2000.1350-1	591-78-6	2-Hexanone (MBK)	ND	mg / Kg	1	0.025		12/07/00
X00454	XG.2000.1350-1	108-10-1	4-Methyl-2-pentanone (MIBK)	ND	mg / Kg	1	0.025		12/07/00
X00454	XG.2000.1350-1	67-64-1	Acetone	ND	mg / Kg	1	0.05		12/07/00
X00454	XG.2000.1350-1	107-02-8	Acrolein	ND	mg / Kg	1	0.1		12/07
X00454	XG.2000.1350-1	107-13-1	Acrylonitrile	ND	mg / Kg	1	0.1		12/0

Quality Control Summary

t: CH2MHILL

Project: 0011269 160660 (TO.10) KAFB

Explanation of codes	
D	*Not applicable due to sample dilution*
L	*Not applicable due to MDL proximity*

X00454	XG.2000.1350-1	71-43-2	Benzene	ND	mg / Kg	1	0.005		12/07/00
X00454	XG.2000.1350-1	75-27-4	Bromodichloromethane	ND	mg / Kg	1	0.005		12/07/00
X00454	XG.2000.1350-1	75-25-2	Bromoform	ND	mg / Kg	1	0.005		12/07/00
X00454	XG.2000.1350-1	74-83-9	Bromomethane	ND	mg / Kg	1	0.025		12/07/00
X00454	XG.2000.1350-1	75-15-0	Carbon disulfide	ND	mg / Kg	1	0.025		12/07/00
X00454	XG.2000.1350-1	56-23-5	Carbon tetrachloride	ND	mg / Kg	1	0.005		12/07/00
X00454	XG.2000.1350-1	108-90-7	Chlorobenzene	ND	mg / Kg	1	0.005		12/07/00
X00454	XG.2000.1350-1	124-48-1	Chlorodibromomethane	ND	mg / Kg	1	0.005		12/07/00
X00454	XG.2000.1350-1	75-00-3	Chloroethane	ND	mg / Kg	1	0.025		12/07/00
X00454	XG.2000.1350-1	67-66-3	Chloroform	ND	mg / Kg	1	0.005		12/07/00
X00454	XG.2000.1350-1	74-87-3	Chloromethane	ND	mg / Kg	1	0.025		12/07/00
X00454	XG.2000.1350-1	156-59-2	cis-1,2 dichloroethene	ND	mg / Kg	1	0.005		12/07/00
X00454	XG.2000.1350-1	10061-01-5	cis-1,3 dichloropropene	ND	mg / Kg	1	0.005		12/07/00
X00454	XG.2000.1350-1	74-95-3	Dibromomethane	ND	mg / Kg	1	0.005		12/07/00
X00454	XG.2000.1350-1	97-63-2	Ethyl methacrylate	ND	mg / Kg	1	0.025		12/07/00
X00454	XG.2000.1350-1	100-41-4	Ethylbenzene	ND	mg / Kg	1	0.005		12/07/00
X00454	XG.2000.1350-1		Freon 113	ND	mg / Kg	1	0.025		12/07/00
X00454	XG.2000.1350-1	75-71-8	Freon 12	ND	mg / Kg	1	0.05		12/07/00
X00454	XG.2000.1350-1	74-88-4	Iodomethane	ND	mg / Kg	1	0.025		12/07/00
X00454	XG.2000.1350-1	1634-04-4	Methyl t-butyl ether (MTBE)	ND	mg / Kg	1	0.005		12/07/00
X00454	XG.2000.1350-1	75-09-2	Methylene chloride	ND	mg / Kg	1	0.05		12/07/00
X00454	XG.2000.1350-1	91-20-3	Naphthalene	ND	mg / Kg	1	0.025		12/07/00
X00454	XG.2000.1350-1	95-47-6	o-Xylene	ND	mg / Kg	1	0.005		12/07/00
4	XG.2000.1350-1	108-38-3/106-42	p/m Xylenes	ND	mg / Kg	1	0.01		12/07/00
X00454	XG.2000.1350-1	100-42-5	Styrene	ND	mg / Kg	1	0.005		12/07/00
X00454	XG.2000.1350-1	156-60-5	t-1,2 Dichloroethene	ND	mg / Kg	1	0.005		12/07/00
X00454	XG.2000.1350-1	10061-02-6	t-1,3 Dichloropropene	ND	mg / Kg	1	0.005		12/07/00
X00454	XG.2000.1350-1	127-18-4	Tetrachloroethene	ND	mg / Kg	1	0.005		12/07/00
X00454	XG.2000.1350-1	108-88-3	Toluene	ND	mg / Kg	1	0.005		12/07/00
X00454	XG.2000.1350-1	79-01-6	Trichloroethene	ND	mg / Kg	1	0.005		12/07/00
X00454	XG.2000.1350-1	75-69-4	Trichlorofluoromethane	ND	mg / Kg	1	0.025		12/07/00
X00454	XG.2000.1350-1	108-05-4	Vinyl acetate	ND	mg / Kg	1	0.025		12/07/00
X00454	XG.2000.1350-1	75-01-4	Vinyl chloride	ND	mg / Kg	1	0.025		12/07/00
X00457-001		**SW846 5030A/8015A GRO by GC/FID**							
X00457	XG.2000.1317-1		Gasoline Range Organics	ND	mg / Kg	1	0.25		12/01/00
X00457-014		**SW846 5030A/8015A GRO by GC/FID**							
X00457	XG.2000.1366-1		Gasoline Range Organics	ND	mg / Kg	1	0.25		12/13/00
X00459-001		**SW846 ME/8015A Diesel Range Organics by GC/FID**							
X00459	XG.2000.1315-3		Diesel Range Organics	ND	mg / Kg	1	25		12/01/00
X00459-009		**SW846 ME/8015A Diesel Range Organics by GC/FID**							
X00459	XG.2000.1354-3		Diesel Range Organics	ND	mg / Kg	1	25		12/12/00
X00459-014		**SW846 ME/8015A Diesel Range Organics by GC/FID**							
X00459	XG.2000.1376-1		Diesel Range Organics	ND	mg / Kg	1	25		12/13/00
X00459-017		**SW846 ME/8015A Diesel Range Organics by GC/FID**							
X00459	XG.2000.1376-2		Diesel Range Organics	ND	mg / Kg	1	25		12/14/00

Quality Control Summary

Explanation of codes	
D	*Not applicable due to sample dilut*
L	*Not applicable due to MDL proximit*

Client: CH2MHILL

Project: 0011269 160660 (TO.10) KAFB

X00459-019 **SW846 ME/8015A Diesel Range Organics by GC/FID**

X00459	XG.2000.1385-1		Diesel Range Organics	ND	mg / Kg	1	25		12/18/00

X00469-001 **SW846 8260A Purgeable VOCs by GC/MS**

X00469	XG.2000.1359-1	75-34-3	1,1 Dichloroethane	ND	mg / Kg	1	0.005		12/07/00
X00469	XG.2000.1359-1	75-34-3	1,1 Dichloroethene	ND	mg / Kg	1	0.005		12/07/00
X00469	XG.2000.1359-1	71-55-6	1,1,1 Trichloroethane	ND	mg / Kg	1	0.005		12/07/00
X00469	XG.2000.1359-1	630-20-6	1,1,1,2 Tetrachloroethane	ND	mg / Kg	1	0.005		12/07/00
X00469	XG.2000.1359-1	79-00-5	1,1,2 Trichloroethane	ND	mg / Kg	1	0.005		12/07/00
X00469	XG.2000.1359-1	79-34-5	1,1,2,2 Tetrachloroethane	ND	mg / Kg	1	0.005		12/07/00
X00469	XG.2000.1359-1	106-93-4	1,2 Dibromoethane (EDB)	ND	mg / Kg	1	0.005		12/07/00
X00469	XG.2000.1359-1	95-50-1	1,2 Dichlorobenzene	ND	mg / Kg	1	0.005		12/07/00
X00469	XG.2000.1359-1	107-06-2	1,2 Dichloroethane	ND	mg / Kg	1	0.005		12/07/00
X00469	XG.2000.1359-1	78-87-5	1,2 Dichloropropane	ND	mg / Kg	1	0.005		12/07/00
X00469	XG.2000.1359-1	96-18-4	1,2,3 Trichloropropane	ND	mg / Kg	1	0.005		12/07/00
X00469	XG.2000.1359-1	95-63-6	1,2,4-Trimethylbenzene	ND	mg / Kg	1	0.005		12/07/00
X00469	XG.2000.1359-1	541-73-1	1,3 Dichlorobenzene	ND	mg / Kg	1	0.005		12/07/00
X00469	XG.2000.1359-1	108-67-8	1,3,5-Trimethylbenzene	ND	mg / Kg	1	0.005		12/07/00
X00469	XG.2000.1359-1	764-41-0	1,4 Dichloro-2-butene	ND	mg / Kg	1	0.05		12/07/00
X00469	XG.2000.1359-1	106-46-7	1,4 Dichlorobenzene	ND	mg / Kg	1	0.005		12/07/00
X00469	XG.2000.1359-1	78-93-3	2-Butanone (MEK)	ND	mg / Kg	1	0.025		12/07/00
X00469	XG.2000.1359-1	110-75-8	2-Chloroethylvinylether	ND	mg / Kg	1	0.025		12/07/00
X00469	XG.2000.1359-1	591-78-6	2-Hexanone (MBK)	ND	mg / Kg	1	0.025		12/07/00
X00469	XG.2000.1359-1	108-10-1	4-Methyl-2-pentanone (MIBK)	ND	mg / Kg	1	0.025		12/0[illegible]
X00469	XG.2000.1359-1	67-64-1	Acetone	ND	mg / Kg	1	0.05		12/07/[illegible]
X00469	XG.2000.1359-1	107-02-8	Acrolein	ND	mg / Kg	1	0.1		12/07/00
X00469	XG.2000.1359-1	107-13-1	Acrylonitrile	ND	mg / Kg	1	0.1		12/07/00
X00469	XG.2000.1359-1	71-43-2	Benzene	ND	mg / Kg	1	0.005		12/07/00
X00469	XG.2000.1359-1	75-27-4	Bromodichloromethane	ND	mg / Kg	1	0.005		12/07/00
X00469	XG.2000.1359-1	75-25-2	Bromoform	ND	mg / Kg	1	0.005		12/07/00
X00469	XG.2000.1359-1	74-83-9	Bromomethane	ND	mg / Kg	1	0.025		12/07/00
X00469	XG.2000.1359-1	75-15-0	Carbon disulfide	ND	mg / Kg	1	0.025		12/07/00
X00469	XG.2000.1359-1	56-23-5	Carbon tetrachloride	ND	mg / Kg	1	0.005		12/07/00
X00469	XG.2000.1359-1	108-90-7	Chlorobenzene	ND	mg / Kg	1	0.005		12/07/00
X00469	XG.2000.1359-1	124-48-1	Chlorodibromomethane	ND	mg / Kg	1	0.005		12/07/00
X00469	XG.2000.1359-1	75-00-3	Chloroethane	ND	mg / Kg	1	0.025		12/07/00
X00469	XG.2000.1359-1	67-66-3	Chloroform	ND	mg / Kg	1	0.005		12/07/00
X00469	XG.2000.1359-1	74-87-3	Chloromethane	ND	mg / Kg	1	0.025		12/07/00
X00469	XG.2000.1359-1	156-59-2	cis-1,2 dichloroethene	ND	mg / Kg	1	0.005		12/07/00
X00469	XG.2000.1359-1	10061-01-5	cis-1,3 dichloropropene	ND	mg / Kg	1	0.005		12/07/00
X00469	XG.2000.1359-1	74-95-3	Dibromomethane	ND	mg / Kg	1	0.005		12/07/00
X00469	XG.2000.1359-1	97-63-2	Ethyl methacrylate	ND	mg / Kg	1	0.025		12/07/00
X00469	XG.2000.1359-1	100-41-4	Ethylbenzene	ND	mg / Kg	1	0.005		12/07/00
X00469	XG.2000.1359-1		Freon 113	ND	mg / Kg	1	0.025		12/07/00
X00469	XG.2000.1359-1	75-71-8	Freon 12	ND	mg / Kg	1	0.05		12/07/00
X00469	XG.2000.1359-1	74-88-4	Iodomethane	ND	mg / Kg	1	0.025		12/07/00
X00469	XG.2000.1359-1	1634-04-4	Methyl t-butyl ether (MTBE)	ND	mg / Kg	1	0.005		12/07/00
X00469	XG.2000.1359-1	75-09-2	Methylene chloride	ND	mg / Kg	1	0.05		12/07/00
X00469	XG.2000.1359-1	91-20-3	Naphthalene	ND	mg / Kg	1	0.025		12/07/[illegible]
X00469	XG.2000.1359-1	95-47-6	o-Xylene	ND	mg / Kg	1	0.005		12/0[illegible]

Quality Control Summary

Explanation of codes	
D	*Not applicable due to sample dilution*
L	*Not applicable due to MDL proximity*

Client: **CH2MHILL**

Project: **0011269 160660 (TO.10) KAFB**

X00469	XG.2000.1359-1	108-38-3/106-42	p/m Xylenes	ND	mg / Kg	1	0.01		12/07/00
X00469	XG.2000.1359-1	100-42-5	Styrene	ND	mg / Kg	1	0.005		12/07/00
X00469	XG.2000.1359-1	156-60-5	t-1,2 Dichloroethene	ND	mg / Kg	1	0.005		12/07/00
X00469	XG.2000.1359-1	10061-02-6	t-1,3 Dichloropropene	ND	mg / Kg	1	0.005		12/07/00
X00469	XG.2000.1359-1	127-18-4	Tetrachloroethene	ND	mg / Kg	1	0.005		12/07/00
X00469	XG.2000.1359-1	108-88-3	Toluene	ND	mg / Kg	1	0.005		12/07/00
X00469	XG.2000.1359-1	79-01-6	Trichloroethene	ND	mg / Kg	1	0.005		12/07/00
X00469	XG.2000.1359-1	75-69-4	Trichlorofluoromethane	ND	mg / Kg	1	0.025		12/07/00
X00469	XG.2000.1359-1	108-05-4	Vinyl acetate	ND	mg / Kg	1	0.025		12/07/00
X00469	XG.2000.1359-1	75-01-4	Vinyl chloride	ND	mg / Kg	1	0.025		12/07/00
X00469-005		**SW846 8260A Purgeable VOCs by GC/MS**							
X00469	XG.2000.1359-5	75-34-3	1,1 Dichloroethane	ND	mg / Kg	1	0.005		12/11/00
X00469	XG.2000.1359-5	75-34-3	1,1 Dichloroethene	ND	mg / Kg	1	0.005		12/11/00
X00469	XG.2000.1359-5	71-55-6	1,1,1 Trichloroethane	ND	mg / Kg	1	0.005		12/11/00
X00469	XG.2000.1359-5	630-20-6	1,1,1,2 Tetrachloroethane	ND	mg / Kg	1	0.005		12/11/00
X00469	XG.2000.1359-5	79-00-5	1,1,2 Trichloroethane	ND	mg / Kg	1	0.005		12/11/00
X00469	XG.2000.1359-5	79-34-5	1,1,2,2 Tetrachloroethane	ND	mg / Kg	1	0.005		12/11/00
X00469	XG.2000.1359-5	106-93-4	1,2 Dibromoethane (EDB)	ND	mg / Kg	1	0.005		12/11/00
X00469	XG.2000.1359-5	95-50-1	1,2 Dichlorobenzene	ND	mg / Kg	1	0.005		12/11/00
X00469	XG.2000.1359-5	107-06-2	1,2 Dichloroethane	ND	mg / Kg	1	0.005		12/11/00
X00469	XG.2000.1359-5	78-87-5	1,2 Dichloropropane	ND	mg / Kg	1	0.005		12/11/00
X00469	XG.2000.1359-5	96-18-4	1,2,3 Trichloropropane	ND	mg / Kg	1	0.005		12/11/00
[illegible]	XG.2000.1359-5	95-63-6	1,2,4-Trimethylbenzene	ND	mg / Kg	1	0.005		12/11/00
X00469	XG.2000.1359-5	541-73-1	1,3 Dichlorobenzene	ND	mg / Kg	1	0.005		12/11/00
X00469	XG.2000.1359-5	108-67-8	1,3,5-Trimethylbenzene	ND	mg / Kg	1	0.005		12/11/00
X00469	XG.2000.1359-5	764-41-0	1,4 Dichloro-2-butene	ND	mg / Kg	1	0.05		12/11/00
X00469	XG.2000.1359-5	106-46-7	1,4 Dichlorobenzene	ND	mg / Kg	1	0.005		12/11/00
X00469	XG.2000.1359-5	78-93-3	2-Butanone (MEK)	ND	mg / Kg	1	0.025		12/11/00
X00469	XG.2000.1359-5	110-75-8	2-Chloroethylvinylether	ND	mg / Kg	1	0.025		12/11/00
X00469	XG.2000.1359-5	591-78-6	2-Hexanone (MBK)	ND	mg / Kg	1	0.025		12/11/00
X00469	XG.2000.1359-5	108-10-1	4-Methyl-2-pentanone (MIBK)	ND	mg / Kg	1	0.025		12/11/00
X00469	XG.2000.1359-5	67-64-1	Acetone	ND	mg / Kg	1	0.05		12/11/00
X00469	XG.2000.1359-5	107-02-8	Acrolein	ND	mg / Kg	1	0.1		12/11/00
X00469	XG.2000.1359-5	107-13-1	Acrylonitrile	ND	mg / Kg	1	0.1		12/11/00
X00469	XG.2000.1359-5	71-43-2	Benzene	ND	mg / Kg	1	0.005		12/11/00
X00469	XG.2000.1359-5	75-27-4	Bromodichloromethane	ND	mg / Kg	1	0.005		12/11/00
X00469	XG.2000.1359-5	75-25-2	Bromoform	ND	mg / Kg	1	0.005		12/11/00
X00469	XG.2000.1359-5	74-83-9	Bromomethane	ND	mg / Kg	1	0.025		12/11/00
X00469	XG.2000.1359-5	75-15-0	Carbon disulfide	ND	mg / Kg	1	0.025		12/11/00
X00469	XG.2000.1359-5	56-23-5	Carbon tetrachloride	ND	mg / Kg	1	0.005		12/11/00
X00469	XG.2000.1359-5	108-90-7	Chlorobenzene	ND	mg / Kg	1	0.005		12/11/00
X00469	XG.2000.1359-5	124-48-1	Chlorodibromomethane	ND	mg / Kg	1	0.005		12/11/00
X00469	XG.2000.1359-5	75-00-3	Chloroethane	ND	mg / Kg	1	0.025		12/11/00
X00469	XG.2000.1359-5	67-66-3	Chloroform	ND	mg / Kg	1	0.005		12/11/00
X00469	XG.2000.1359-5	74-87-3	Chloromethane	ND	mg / Kg	1	0.025		12/11/00
X00469	XG.2000.1359-5	156-59-2	cis-1,2 dichloroethene	ND	mg / Kg	1	0.005		12/11/00
X00469	XG.2000.1359-5	10061-01-5	cis-1,3 dichloropropene	ND	mg / Kg	1	0.005		12/11/00
[illegible]	XG.2000.1359-5	74-95-3	Dibromomethane	ND	mg / Kg	1	0.005		12/11/00
[illegible]	XG.2000.1359-5	97-63-2	Ethyl methacrylate	ND	mg / Kg	1	0.025		12/11/00

Quality Control Summary

Explanation of codes	
D	*Not applicable due to sample diluti*
L	*Not applicable due to MDL proximi*

Client: CH2MHILL

Project: 0011269 160660 (TO.10) KAFB

X00469	XG.2000.1359-5	100-41-4	Ethylbenzene	ND	mg / Kg	1	0.005		12/11/00
X00469	XG.2000.1359-5		Freon 113	ND	mg / Kg	1	0.025		12/11/00
X00469	XG.2000.1359-5	75-71-8	Freon 12	ND	mg / Kg	1	0.05		12/11/00
X00469	XG.2000.1359-5	74-88-4	Iodomethane	ND	mg / Kg	1	0.025		12/11/00
X00469	XG.2000.1359-5	1634-04-4	Methyl t-butyl ether (MTBE)	ND	mg / Kg	1	0.005		12/11/00
X00469	XG.2000.1359-5	75-09-2	Methylene chloride	ND	mg / Kg	1	0.05		12/11/00
X00469	XG.2000.1359-5	91-20-3	Naphthalene	ND	mg / Kg	1	0.025		12/11/00
X00469	XG.2000.1359-5	95-47-6	o-Xylene	ND	mg / Kg	1	0.005		12/11/00
X00469	XG.2000.1359-5	108-38-3/106-42	p/m Xylenes	ND	mg / Kg	1	0.01		12/11/00
X00469	XG.2000.1359-5	100-42-5	Styrene	ND	mg / Kg	1	0.005		12/11/00
X00469	XG.2000.1359-5	156-60-5	t-1,2 Dichloroethene	ND	mg / Kg	1	0.005		12/11/00
X00469	XG.2000.1359-5	10061-02-6	t-1,3 Dichloropropene	ND	mg / Kg	1	0.005		12/11/00
X00469	XG.2000.1359-5	127-18-4	Tetrachloroethene	ND	mg / Kg	1	0.005		12/11/00
X00469	XG.2000.1359-5	108-88-3	Toluene	ND	mg / Kg	1	0.005		12/11/00
X00469	XG.2000.1359-5	79-01-6	Trichloroethene	ND	mg / Kg	1	0.005		12/11/00
X00469	XG.2000.1359-5	75-69-4	Trichlorofluoromethane	ND	mg / Kg	1	0.025		12/11/00
X00469	XG.2000.1359-5	108-05-4	Vinyl acetate	ND	mg / Kg	1	0.025		12/11/00
X00469	XG.2000.1359-5	75-01-4	Vinyl chloride	ND	mg / Kg	1	0.025		12/11/00

X00469-015 **SW846 8260A Purgeable VOCs by GC/MS**

X00469	XG.2000.1359-15	75-34-3	1,1 Dichloroethane	ND	mg / Kg	1	0.005		12/12/00
X00469	XG.2000.1359-15	75-34-3	1,1 Dichloroethene	ND	mg / Kg	1	0.005		12/12/00
X00469	XG.2000.1359-15	71-55-6	1,1,1 Trichloroethane	ND	mg / Kg	1	0.005		12/12/00
X00469	XG.2000.1359-15	630-20-6	1,1,1,2 Tetrachloroethane	ND	mg / Kg	1	0.005		12/1[illegible]
X00469	XG.2000.1359-15	79-00-5	1,1,2 Trichloroethane	ND	mg / Kg	1	0.005		12/12/[illegible]
X00469	XG.2000.1359-15	79-34-5	1,1,2,2 Tetrachloroethane	ND	mg / Kg	1	0.005		12/12/00
X00469	XG.2000.1359-15	106-93-4	1,2 Dibromoethane (EDB)	ND	mg / Kg	1	0.005		12/12/00
X00469	XG.2000.1359-15	95-50-1	1,2 Dichlorobenzene	ND	mg / Kg	1	0.005		12/12/00
X00469	XG.2000.1359-15	107-06-2	1,2 Dichloroethane	ND	mg / Kg	1	0.005		12/12/00
X00469	XG.2000.1359-15	78-87-5	1,2 Dichloropropane	ND	mg / Kg	1	0.005		12/12/00
X00469	XG.2000.1359-15	96-18-4	1,2,3 Trichloropropane	ND	mg / Kg	1	0.005		12/12/00
X00469	XG.2000.1359-15	95-63-6	1,2,4-Trimethylbenzene	ND	mg / Kg	1	0.005		12/12/00
X00469	XG.2000.1359-15	541-73-1	1,3 Dichlorobenzene	ND	mg / Kg	1	0.005		12/12/00
X00469	XG.2000.1359-15	108-67-8	1,3,5-Trimethylbenzene	ND	mg / Kg	1	0.005		12/12/00
X00469	XG.2000.1359-15	764-41-0	1,4 Dichloro-2-butene	ND	mg / Kg	1	0.05		12/12/00
X00469	XG.2000.1359-15	106-46-7	1,4 Dichlorobenzene	ND	mg / Kg	1	0.005		12/12/00
X00469	XG.2000.1359-15	78-93-3	2-Butanone (MEK)	ND	mg / Kg	1	0.025		12/12/00
X00469	XG.2000.1359-15	110-75-8	2-Chloroethylvinylether	ND	mg / Kg	1	0.025		12/12/00
X00469	XG.2000.1359-15	591-78-6	2-Hexanone (MBK)	ND	mg / Kg	1	0.025		12/12/00
X00469	XG.2000.1359-15	108-10-1	4-Methyl-2-pentanone (MIBK)	ND	mg / Kg	1	0.025		12/12/00
X00469	XG.2000.1359-15	67-64-1	Acetone	ND	mg / Kg	1	0.05		12/12/00
X00469	XG.2000.1359-15	107-02-8	Acrolein	ND	mg / Kg	1	0.1		12/12/00
X00469	XG.2000.1359-15	107-13-1	Acrylonitrile	ND	mg / Kg	1	0.1		12/12/00
X00469	XG.2000.1359-15	71-43-2	Benzene	ND	mg / Kg	1	0.005		12/12/00
X00469	XG.2000.1359-15	75-27-4	Bromodichloromethane	ND	mg / Kg	1	0.005		12/12/00
X00469	XG.2000.1359-15	75-25-2	Bromoform	ND	mg / Kg	1	0.005		12/12/00
X00469	XG.2000.1359-15	74-83-9	Bromomethane	ND	mg / Kg	1	0.025		12/12/00
X00469	XG.2000.1359-15	75-15-0	Carbon disulfide	ND	mg / Kg	1	0.025		12/12/00
X00469	XG.2000.1359-15	56-23-5	Carbon tetrachloride	ND	mg / Kg	1	0.005		12/12/[illegible]
X00469	XG.2000.1359-15	108-90-7	Chlorobenzene	ND	mg / Kg	1	0.005		12/1[illegible]

Quality Control Summary

Explanation of codes	
D	*Not applicable due to sample dilution*
L	*Not applicable due to MDL proximity*

nt: CH2MHILL

Project: 0011269 160660 (TO.10) KAFB

X00469	XG.2000.1359-15	124-48-1	Chlorodibromomethane	ND	mg / Kg	1	0.005		12/12/00
X00469	XG.2000.1359-15	75-00-3	Chloroethane	ND	mg / Kg	1	0.025		12/12/00
X00469	XG.2000.1359-15	67-66-3	Chloroform	ND	mg / Kg	1	0.005		12/12/00
X00469	XG.2000.1359-15	74-87-3	Chloromethane	ND	mg / Kg	1	0.025		12/12/00
X00469	XG.2000.1359-15	156-59-2	cis-1,2 dichloroethene	ND	mg / Kg	1	0.005		12/12/00
X00469	XG.2000.1359-15	10061-01-5	cis-1,3 dichloropropene	ND	mg / Kg	1	0.005		12/12/00
X00469	XG.2000.1359-15	74-95-3	Dibromomethane	ND	mg / Kg	1	0.005		12/12/00
X00469	XG.2000.1359-15	97-63-2	Ethyl methacrylate	ND	mg / Kg	1	0.025		12/12/00
X00469	XG.2000.1359-15	100-41-4	Ethylbenzene	ND	mg / Kg	1	0.005		12/12/00
X00469	XG.2000.1359-15		Freon 113	ND	mg / Kg	1	0.025		12/12/00
X00469	XG.2000.1359-15	75-71-8	Freon 12	ND	mg / Kg	1	0.05		12/12/00
X00469	XG.2000.1359-15	74-88-4	Iodomethane	ND	mg / Kg	1	0.025		12/12/00
X00469	XG.2000.1359-15	1634-04-4	Methyl t-butyl ether (MTBE)	ND	mg / Kg	1	0.005		12/12/00
X00469	XG.2000.1359-15	75-09-2	Methylene chloride	ND	mg / Kg	1	0.05		12/12/00
X00469	XG.2000.1359-15	91-20-3	Naphthalene	ND	mg / Kg	1	0.025		12/12/00
X00469	XG.2000.1359-15	95-47-6	o-Xylene	ND	mg / Kg	1	0.005		12/12/00
X00469	XG.2000.1359-15	108-38-3/106-42	p/m Xylenes	ND	mg / Kg	1	0.01		12/12/00
X00469	XG.2000.1359-15	100-42-5	Styrene	ND	mg / Kg	1	0.005		12/12/00
X00469	XG.2000.1359-15	156-60-5	t-1,2 Dichloroethene	ND	mg / Kg	1	0.005		12/12/00
X00469	XG.2000.1359-15	10061-02-6	t-1,3 Dichloropropene	ND	mg / Kg	1	0.005		12/12/00
X00469	XG.2000.1359-15	127-18-4	Tetrachloroethene	ND	mg / Kg	1	0.005		12/12/00
X00469	XG.2000.1359-15	108-88-3	Toluene	ND	mg / Kg	1	0.005		12/12/00
[illegible]9	XG.2000.1359-15	79-01-6	Trichloroethene	ND	mg / Kg	1	0.005		12/12/00
[illegible]9	XG.2000.1359-15	75-69-4	Trichlorofluoromethane	ND	mg / Kg	1	0.025		12/12/00
X00469	XG.2000.1359-15	108-05-4	Vinyl acetate	ND	mg / Kg	1	0.025		12/12/00
X00469	XG.2000.1359-15	75-01-4	Vinyl chloride	ND	mg / Kg	1	0.025		12/12/00

X00469-028 **SW846 8260A Purgeable VOCs by GC/MS**

X00469	XG.2000.1359-28	75-34-3	1,1 Dichloroethane	ND	mg / Kg	1	0.005		12/13/00
X00469	XG.2000.1359-28	75-34-3	1,1 Dichloroethene	ND	mg / Kg	1	0.005		12/13/00
X00469	XG.2000.1359-28	71-55-6	1,1,1 Trichloroethane	ND	mg / Kg	1	0.005		12/13/00
X00469	XG.2000.1359-28	630-20-6	1,1,1,2 Tetrachloroethane	ND	mg / Kg	1	0.005		12/13/00
X00469	XG.2000.1359-28	79-00-5	1,1,2 Trichloroethane	ND	mg / Kg	1	0.005		12/13/00
X00469	XG.2000.1359-28	79-34-5	1,1,2,2 Tetrachloroethane	ND	mg / Kg	1	0.005		12/13/00
X00469	XG.2000.1359-28	106-93-4	1,2 Dibromoethane (EDB)	ND	mg / Kg	1	0.005		12/13/00
X00469	XG.2000.1359-28	95-50-1	1,2 Dichlorobenzene	ND	mg / Kg	1	0.005		12/13/00
X00469	XG.2000.1359-28	107-06-2	1,2 Dichloroethane	ND	mg / Kg	1	0.005		12/13/00
X00469	XG.2000.1359-28	78-87-5	1,2 Dichloropropane	ND	mg / Kg	1	0.005		12/13/00
X00469	XG.2000.1359-28	96-18-4	1,2,3 Trichloropropane	ND	mg / Kg	1	0.005		12/13/00
X00469	XG.2000.1359-28	95-63-6	1,2,4-Trimethylbenzene	ND	mg / Kg	1	0.005		12/13/00
X00469	XG.2000.1359-28	541-73-1	1,3 Dichlorobenzene	ND	mg / Kg	1	0.005		12/13/00
X00469	XG.2000.1359-28	108-67-8	1,3,5-Trimethylbenzene	ND	mg / Kg	1	0.005		12/13/00
X00469	XG.2000.1359-28	764-41-0	1,4 Dichloro-2-butene	ND	mg / Kg	1	0.05		12/13/00
X00469	XG.2000.1359-28	106-46-7	1,4 Dichlorobenzene	ND	mg / Kg	1	0.005		12/13/00
X00469	XG.2000.1359-28	78-93-3	2-Butanone (MEK)	ND	mg / Kg	1	0.025		12/13/00
X00469	XG.2000.1359-28	110-75-8	2-Chloroethylvinylether	ND	mg / Kg	1	0.025		12/13/00
X00469	XG.2000.1359-28	591-78-6	2-Hexanone (MBK)	ND	mg / Kg	1	0.025		12/13/00
X00469	XG.2000.1359-28	108-10-1	4-Methyl-2-pentanone (MIBK)	ND	mg / Kg	1	0.025		12/13/00
[illegible]69	XG.2000.1359-28	67-64-1	Acetone	ND	mg / Kg	1	0.05		12/13/00
[illegible]9	XG.2000.1359-28	107-02-8	Acrolein	ND	mg / Kg	1	0.1		12/13/00

Quality Control Summary

Explanation of codes	
D	*Not applicable due to sample diluti*
L	*Not applicable due to MDL proximi*

Client: CH2MHILL

Project: 0011269 160660 (TO.10) KAFB

X00469	XG.2000.1359-28	107-13-1	Acrylonitrile	ND	mg / Kg	1	0.1		12/13/C0
X00469	XG.2000.1359-28	71-43-2	Benzene	ND	mg / Kg	1	0.005		12/13/C0
X00469	XG.2000.1359-28	75-27-4	Bromodichloromethane	ND	mg / Kg	1	0.005		12/13/C0
X00469	XG.2000.1359-28	75-25-2	Bromoform	ND	mg / Kg	1	0.005		12/13/C0
X00469	XG.2000.1359-28	74-83-9	Bromomethane	ND	mg / Kg	1	0.025		12/13/C0
X00469	XG.2000.1359-28	75-15-0	Carbon disulfide	ND	mg / Kg	1	0.025		12/13/C0
X00469	XG.2000.1359-28	56-23-5	Carbon tetrachloride	ND	mg / Kg	1	0.005		12/13/C0
X00469	XG.2000.1359-28	108-90-7	Chlorobenzene	ND	mg / Kg	1	0.005		12/13/C0
X00469	XG.2000.1359-28	124-48-1	Chlorodibromomethane	ND	mg / Kg	1	0.005		12/13/C0
X00469	XG.2000.1359-28	75-00-3	Chloroethane	ND	mg / Kg	1	0.025		12/13/C0
X00469	XG.2000.1359-28	67-66-3	Chloroform	ND	mg / Kg	1	0.005		12/13/C0
X00469	XG.2000.1359-28	74-87-3	Chloromethane	ND	mg / Kg	1	0.025		12/13/C0
X00469	XG.2000.1359-28	156-59-2	cis-1,2 dichloroethene	ND	mg / Kg	1	0.005		12/13/C0
X00469	XG.2000.1359-28	10061-01-5	cis-1,3 dichloropropene	ND	mg / Kg	1	0.005		12/13/C0
X00469	XG.2000.1359-28	74-95-3	Dibromomethane	ND	mg / Kg	1	0.005		12/13/C0
X00469	XG.2000.1359-28	97-63-2	Ethyl methacrylate	ND	mg / Kg	1	0.025		12/13/C0
X00469	XG.2000.1359-28	100-41-4	Ethylbenzene	ND	mg / Kg	1	0.005		12/13/C0
X00469	XG.2000.1359-28		Freon 113	ND	mg / Kg	1	0.025		12/13/C0
X00469	XG.2000.1359-28	75-71-8	Freon 12	ND	mg / Kg	1	0.05		12/13/C0
X00469	XG.2000.1359-28	74-88-4	Iodomethane	ND	mg / Kg	1	0.025		12/13/C0
X00469	XG.2000.1359-28	1634-04-4	Methyl t-butyl ether (MTBE)	ND	mg / Kg	1	0.005		12/13/C0
X00469	XG.2000.1359-28	75-09-2	Methylene chloride	ND	mg / Kg	1	0.05		12/13/C0
X00469	XG.2000.1359-28	91-20-3	Naphthalene	ND	mg / Kg	1	0.025		12/13/C0
X00469	XG.2000.1359-28	95-47-6	o-Xylene	ND	mg / Kg	1	0.005		12/1
X00469	XG.2000.1359-28	108-38-3/106-42	p/m Xylenes	ND	mg / Kg	1	0.01		12/13/
X00469	XG.2000.1359-28	100-42-5	Styrene	ND	mg / Kg	1	0.005		12/13/C0
X00469	XG.2000.1359-28	156-60-5	t-1,2 Dichloroethene	ND	mg / Kg	1	0.005		12/13/C0
X00469	XG.2000.1359-28	10061-02-6	t-1,3 Dichloropropene	ND	mg / Kg	1	0.005		12/13/C0
X00469	XG.2000.1359-28	127-18-4	Tetrachloroethene	ND	mg / Kg	1	0.005		12/13/C0
X00469	XG.2000.1359-28	108-88-3	Toluene	ND	mg / Kg	1	0.005		12/13/C0
X00469	XG.2000.1359-28	79-01-6	Trichloroethene	ND	mg / Kg	1	0.005		12/13/C0
X00469	XG.2000.1359-28	75-69-4	Trichlorofluoromethane	ND	mg / Kg	1	0.025		12/13/C0
X00469	XG.2000.1359-28	108-05-4	Vinyl acetate	ND	mg / Kg	1	0.025		12/13/C0
X00469	XG.2000.1359-28	75-01-4	Vinyl chloride	ND	mg / Kg	1	0.025		12/13/C0

QC Type **MS: Matrix Spike** QC Matrix **SOLID**

QC Group	Run Sequence	CAS #	Analyte	Result	Units	Dilution Factor	Detection Limit	Code	Run Date
X00448-005		**SW846 5030A/8021B Purgeable VOCs by GC/PID**							
X00448	XG.2000.1303-11	71-43-2	Benzene	106	% Recovery	1	NA		11/21/C0
X00448	XG.2000.1303-11	100-41-4	Ethylbenzene	105	% Recovery	1	NA		11/21/C0
X00448	XG.2000.1303-11	95-47-6	o-Xylene	103	% Recovery	1	NA		11/21/C0
X00448	XG.2000.1303-11	108-38-3/106-42	p/m-Xylenes	104	% Recovery	1	NA		11/21/C0
X00448	XG.2000.1303-11	108-88-3	Toluene	103	% Recovery	1	NA		11/21/C0
X00454-013		**SW846 8260A Purgeable VOCs by GC/MS**							
X00454	XG.2000.1313-13	75-34-3	1,1 Dichloroethene	106	% Recovery	1	NA		11/3

Explanation of codes	
D	*Not applicable due to sample dilution*
L	*Not applicable due to MDL proximity*

nt: CH2MHILL

Project: 0011269 160660 (TO.10) KAFB

X00454	XG.2000.1313-13	106-46-7	1,4 Dichlorobenzene	101	% Recovery	1	NA		11/30/00
X00454	XG.2000.1313-13	71-43-2	Benzene	112	% Recovery	1	NA		11/30/00
X00454	XG.2000.1313-13	108-90-7	Chlorobenzene	108	% Recovery	1	NA		11/30/00
X00454	XG.2000.1313-13	108-88-3	Toluene	114	% Recovery	1	NA		11/30/00
X00454	XG.2000.1313-13	79-01-6	Trichloroethene	108	% Recovery	1	NA		11/30/00
X00457-005		**SW846 5030A/8015A GRO by GC/FID**							
X00457	XG.2000.1317-5		Gasoline Range Organics	96	% Recovery	1	NA		12/01/00
X00459-005		**SW846 ME/8015A Diesel Range Organics by GC/FID**							
X00459	XG.2000.1315-7		Diesel Range Organics	99	% Recovery	1	NA		12/01/00
X00469-013		**SW846 8260A Purgeable VOCs by GC/MS**							
X00469	XG.2000.1359-13	75-34-3	1,1 Dichloroethene	118	% Recovery	1	NA		12/11/00
X00469	XG.2000.1359-13	106-46-7	1,4 Dichlorobenzene	104	% Recovery	1	NA		12/11/00
X00469	XG.2000.1359-13	71-43-2	Benzene	113	% Recovery	1	NA		12/11/00
X00469	XG.2000.1359-13	108-90-7	Chlorobenzene	110	% Recovery	1	NA		12/11/00
X00469	XG.2000.1359-13	108-88-3	Toluene	114	% Recovery	1	NA		12/11/00
X00469	XG.2000.1359-13	79-01-6	Trichloroethene	113	% Recovery	1	NA		12/11/00

QC Type **MSD: Matrix Spike Duplicate Accuracy** QC Matrix **SOLID**

Group	Run Sequence	CAS #	Analyte	Result	Units	Dilution Factor	Detection Limit	Code	Run Date
X00448-006		**SW846 5030A/8021B Purgeable VOCs by GC/PID**							
X00448	XG.2000.1303-12	71-43-2	Benzene	107	% Recovery	1	NA		11/21/00
X00448	XG.2000.1303-12	100-41-4	Ethylbenzene	106	% Recovery	1	NA		11/21/00
X00448	XG.2000.1303-12	95-47-6	o-Xylene	105	% Recovery	1	NA		11/21/00
X00448	XG.2000.1303-12	108-38-3/106-42	p/m-Xylenes	105	% Recovery	1	NA		11/21/00
X00448	XG.2000.1303-12	108-88-3	Toluene	104	% Recovery	1	NA		11/21/00
X00454-014		**SW846 8260A Purgeable VOCs by GC/MS**							
X00454	XG.2000.1313-14	75-34-3	1,1 Dichloroethene	106	% Recovery	1	NA		11/30/00
X00454	XG.2000.1313-14	106-46-7	1,4 Dichlorobenzene	99	% Recovery	1	NA		11/30/00
X00454	XG.2000.1313-14	71-43-2	Benzene	110	% Recovery	1	NA		11/30/00
X00454	XG.2000.1313-14	108-90-7	Chlorobenzene	105	% Recovery	1	NA		11/30/00
X00454	XG.2000.1313-14	108-88-3	Toluene	112	% Recovery	1	NA		11/30/00
X00454	XG.2000.1313-14	79-01-6	Trichloroethene	106	% Recovery	1	NA		11/30/00
X00457-006		**SW846 5030A/8015A GRO by GC/FID**							
X00457	XG.2000.1317-6		Gasoline Range Organics	97	% Recovery	1	NA		12/01/00
X00459-006		**SW846 ME/8015A Diesel Range Organics by GC/FID**							
X00459	XG.2000.1315-8		Diesel Range Organics	98	% Recovery	1	NA		12/01/00
X00469-014		**SW846 8260A Purgeable VOCs by GC/MS**							
X00469	XG.2000.1359-14	75-34-3	1,1 Dichloroethene	116	% Recovery	1	NA		12/11/00
X00469	XG.2000.1359-14	106-46-7	1,4 Dichlorobenzene	103	% Recovery	1	NA		12/11/00
X00469	XG.2000.1359-14	71-43-2	Benzene	112	% Recovery	1	NA		12/11/00
X00469	XG.2000.1359-14	108-90-7	Chlorobenzene	110	% Recovery	1	NA		12/11/00
X00469	XG.2000.1359-14	108-88-3	Toluene	113	% Recovery	1	NA		12/11/00
X00469	XG.2000.1359-14	79-01-6	Trichloroethene	112	% Recovery	1	NA		12/11/00

Quality Control Summary

Client: CH2MHILL

Project: 0011269 160660 (TO.10) KAFB

Explanation of codes	
D	*Not applicable due to sample diluti*
L	*Not applicable due to MDL proximity*

QC Type: **MSD: Matrix Spike Duplicate Precision** QC Matrix: **SOLID**

QC Group	Run Sequence	CAS #	Analyte	Result	Units	Dilution Factor	Detection Limit	Code	Run Date
X00448-006		**SW846 5030A/8021B Purgeable VOCs by GC/PID**							
X00448	XG.2000.1303-12	71-43-2	Benzene	< 1	RPD	1	NA		11/21/00
X00448	XG.2000.1303-12	100-41-4	Ethylbenzene	< 1	RPD	1	NA		11/21/00
X00448	XG.2000.1303-12	95-47-6	o-Xylene	2	RPD	1	NA		11/21/00
X00448	XG.2000.1303-12	108-38-3/106-42	p/m-Xylenes	< 1	RPD	1	NA		11/21/00
X00448	XG.2000.1303-12	108-88-3	Toluene	< 1	RPD	1	NA		11/21/00
X00454-014		**SW846 8260A Purgeable VOCs by GC/MS**							
X00454	XG.2000.1313-14	75-34-3	1,1 Dichloroethene	< 1	RPD	1	NA		11/30/00
X00454	XG.2000.1313-14	106-46-7	1,4 Dichlorobenzene	2	RPD	1	NA		11/30/00
X00454	XG.2000.1313-14	71-43-2	Benzene	2	RPD	1	NA		11/30/00
X00454	XG.2000.1313-14	108-90-7	Chlorobenzene	3	RPD	1	NA		11/30/00
X00454	XG.2000.1313-14	108-88-3	Toluene	2	RPD	1	NA		11/30/00
X00454	XG.2000.1313-14	79-01-6	Trichloroethene	2	RPD	1	NA		11/30/00
X00457-006		**SW846 5030A/8015A GRO by GC/FID**							
X00457	XG.2000.1317-6		Gasoline Range Organics	2	RPD	1	NA		12/01/00
X00459-006		**SW846 ME/8015A Diesel Range Organics by GC/FID**							
X00459	XG.2000.1315-8		Diesel Range Organics	1	RPD	1	NA		12/01/00
X00469-014		**SW846 8260A Purgeable VOCs by GC/MS**							
X00469	XG.2000.1359-14	75-34-3	1,1 Dichloroethene	2	RPD	1	NA		12/11/00
X00469	XG.2000.1359-14	106-46-7	1,4 Dichlorobenzene	< 1	RPD	1	NA		12/11/00
X00469	XG.2000.1359-14	71-43-2	Benzene	< 1	RPD	1	NA		12/11/00
X00469	XG.2000.1359-14	108-90-7	Chlorobenzene	< 1	RPD	1	NA		12/11/00
X00469	XG.2000.1359-14	108-88-3	Toluene	< 1	RPD	1	NA		12/11/00
X00469	XG.2000.1359-14	79-01-6	Trichloroethene	< 1	RPD	1	NA		12/11/00

Quality Control Summary

Explanation of codes	
D	*Not applicable due to sample dilution*
L	*Not applicable due to MDL proximity*

nt: CH2MHILL

Project: 0011269 160660 (TO.10) KAFB

QC Type: **MB: Method Blank** QC Matrix: **WASTE**

QC Group	Run Sequence	CAS #	Analyte	Result	Units	Dilution Factor	Detection Limit	Code	Run Date
X00454-022		**SW846 5030A/8260A Purgeable VOCs by GC/MS**							
X00454	XG.2000.1349-1	75-34-3	1,1 Dichloroethane	ND	mg / Kg	1	0.05		12/05/00
X00454	XG.2000.1349-1	75-34-3	1,1 Dichloroethene	ND	mg / Kg	1	0.05		12/05/00
X00454	XG.2000.1349-1	71-55-6	1,1,1 Trichloroethane	ND	mg / Kg	1	0.05		12/05/00
X00454	XG.2000.1349-1	630-20-6	1,1,1,2 Tetrachloroethane	ND	mg / Kg	1	0.05		12/05/00
X00454	XG.2000.1349-1	79-00-5	1,1,2 Trichloroethane	ND	mg / Kg	1	0.05		12/05/00
X00454	XG.2000.1349-1	79-34-5	1,1,2,2 Tetrachloroethane	ND	mg / Kg	1	0.05		12/05/00
X00454	XG.2000.1349-1	106-93-4	1,2 Dibromoethane (EDB)	ND	mg / Kg	1	0.05		12/05/00
X00454	XG.2000.1349-1	95-50-1	1,2 Dichlorobenzene	ND	mg / Kg	1	0.05		12/05/00
X00454	XG.2000.1349-1	107-06-2	1,2 Dichloroethane	ND	mg / Kg	1	0.05		12/05/00
X00454	XG.2000.1349-1	78-87-5	1,2 Dichloropropane	ND	mg / Kg	1	0.05		12/05/00
X00454	XG.2000.1349-1	96-18-4	1,2,3 Trichloropropane	ND	mg / Kg	1	0.05		12/05/00
X00454	XG.2000.1349-1	95-63-6	1,2,4-Trimethylbenzene	ND	mg / Kg	1	0.05		12/05/00
X00454	XG.2000.1349-1	541-73-1	1,3 Dichlorobenzene	ND	mg / Kg	1	0.05		12/05/00
X00454	XG.2000.1349-1	108-67-8	1,3,5-Trimethylbenzene	ND	mg / Kg	1	0.05		12/05/00
X00454	XG.2000.1349-1	764-41-0	1,4 Dichloro-2-butene	ND	mg / Kg	1	0.5		12/05/00
[illegible]54	XG.2000.1349-1	106-46-7	1,4 Dichlorobenzene	ND	mg / Kg	1	0.05		12/05/00
[illegible]4	XG.2000.1349-1	78-93-3	2-Butanone (MEK)	ND	mg / Kg	1	0.25		12/05/00
X00454	XG.2000.1349-1	110-75-8	2-Chloroethylvinylether	ND	mg / Kg	1	0.25		12/05/00
X00454	XG.2000.1349-1	591-78-6	2-Hexanone (MBK)	ND	mg / Kg	1	0.25		12/05/00
X00454	XG.2000.1349-1	108-10-1	4-Methyl-2-pentanone (MIBK)	ND	mg / Kg	1	0.25		12/05/00
X00454	XG.2000.1349-1	67-64-1	Acetone	ND	mg / Kg	1	0.5		12/05/00
X00454	XG.2000.1349-1	107-02-8	Acrolein	ND	mg / Kg	1	1		12/05/00
X00454	XG.2000.1349-1	107-13-1	Acrylonitrile	ND	mg / Kg	1	1		12/05/00
X00454	XG.2000.1349-1	71-43-2	Benzene	ND	mg / Kg	1	0.05		12/05/00
X00454	XG.2000.1349-1	75-27-4	Bromodichloromethane	ND	mg / Kg	1	0.05		12/05/00
X00454	XG.2000.1349-1	75-25-2	Bromoform	ND	mg / Kg	1	0.05		12/05/00
X00454	XG.2000.1349-1	74-83-9	Bromomethane	ND	mg / Kg	1	0.25		12/05/00
X00454	XG.2000.1349-1	75-15-0	Carbon disulfide	ND	mg / Kg	1	0.25		12/05/00
X00454	XG.2000.1349-1	56-23-5	Carbon tetrachloride	ND	mg / Kg	1	0.05		12/05/00
X00454	XG.2000.1349-1	108-90-7	Chlorobenzene	ND	mg / Kg	1	0.05		12/05/00
X00454	XG.2000.1349-1	124-48-1	Chlorodibromomethane	ND	mg / Kg	1	0.05		12/05/00
X00454	XG.2000.1349-1	75-00-3	Chloroethane	ND	mg / Kg	1	0.25		12/05/00
X00454	XG.2000.1349-1	67-66-3	Chloroform	ND	mg / Kg	1	0.05		12/05/00
X00454	XG.2000.1349-1	74-87-3	Chloromethane	ND	mg / Kg	1	0.25		12/05/00
X00454	XG.2000.1349-1	156-59-2	cis-1,2 dichloroethene	ND	mg / Kg	1	0.05		12/05/00
X00454	XG.2000.1349-1	10061-01-5	cis-1,3 dichloropropene	ND	mg / Kg	1	0.05		12/05/00
X00454	XG.2000.1349-1	74-95-3	Dibromomethane	ND	mg / Kg	1	0.05		12/05/00
X00454	XG.2000.1349-1	97-63-2	Ethyl methacrylate	ND	mg / Kg	1	0.25		12/05/00
X00454	XG.2000.1349-1	100-41-4	Ethylbenzene	ND	mg / Kg	1	0.05		12/05/00
X00454	XG.2000.1349-1		Freon 113	ND	mg / Kg	1	0.25		12/05/00
X00454	XG.2000.1349-1	75-71-8	Freon 12	ND	mg / Kg	1	0.5		12/05/00
[illegible]54	XG.2000.1349-1	74-88-4	Iodomethane	ND	mg / Kg	1	0.25		12/05/00
[illegible]54	XG.2000.1349-1	1634-04-4	Methyl t-butyl ether (MTBE)	ND	mg / Kg	1	0.05		12/05/00

Quality Control Summary

Explanation of codes	
D	*Not applicable due to sample dilutio*
L	*Not applicable due to MDL proxim*

Client: **CH2MHILL**

Project: **0011269** **160660 (TO.10) KAFB**

X00454	XG.2000.1349-1	75-09-2	Methylene chloride	ND	mg / Kg	1	0.5		12/05/00
X00454	XG.2000.1349-1	91-20-3	Naphthalene	ND	mg / Kg	1	0.25		12/05/00
X00454	XG.2000.1349-1	95-47-6	o-Xylene	ND	mg / Kg	1	0.05		12/05/00
X00454	XG.2000.1349-1	108-38-3/106-42	p/m Xylenes	ND	mg / Kg	1	0.1		12/05/00
X00454	XG.2000.1349-1	100-42-5	Styrene	ND	mg / Kg	1	0.05		12/05/00
X00454	XG.2000.1349-1	156-60-5	t-1,2 Dichloroethene	ND	mg / Kg	1	0.05		12/05/00
X00454	XG.2000.1349-1	10061-02-6	t-1,3 Dichloropropene	ND	mg / Kg	1	0.05		12/05/00
X00454	XG.2000.1349-1	127-18-4	Tetrachloroethene	ND	mg / Kg	1	0.05		12/05/00
X00454	XG.2000.1349-1	108-88-3	Toluene	ND	mg / Kg	1	0.05		12/05/00
X00454	XG.2000.1349-1	79-01-6	Trichloroethene	ND	mg / Kg	1	0.05		12/05/00
X00454	XG.2000.1349-1	75-69-4	Trichlorofluoromethane	ND	mg / Kg	1	0.25		12/05/00
X00454	XG.2000.1349-1	108-05-4	Vinyl acetate	ND	mg / Kg	1	0.25		12/05/00
X00454	XG.2000.1349-1	75-01-4	Vinyl chloride	ND	mg / Kg	1	0.25		12/05/00

Quality Control Summary

Explanation of codes	
D	*Not applicable due to sample dilution*
L	*Not applicable due to MDL proximity*

ıt: CH2MHILL
Project: 0011269 160660 (TO.10) KAFB

QC Type **LCS: Lab Control Spike** QC Matrix **WATER**

QC Group	Run Sequence	CAS #	Analyte	Result	Units	Dilution Factor	Detection Limit	Code	Run Date
X00444-002		**SW846 ME/8015A Diesel Range Organics by GC/FID**							
X00444	XG.2000.1288-2		Diesel Range Organics	88	% Recovery	1	NA		11/17/00
X00445-002		**SW846 5030A/8015A GRO by GC/FID**							
X00445	XG.2000.1286-5		Gasoline Range Organics	100	% Recovery	1	NA		11/18/00
X00447-003		**SW846 8260A Purgeable VOCs by GC/MS**							
X00447	XG.2000.1301-3	75-34-3	1,1 Dichloroethene	110	% Recovery	1	NA		11/20/00
X00447	XG.2000.1301-3	106-46-7	1,4 Dichlorobenzene	107	% Recovery	1	NA		11/20/00
X00447	XG.2000.1301-3	71-43-2	Benzene	112	% Recovery	1	NA		11/20/00
X00447	XG.2000.1301-3	108-90-7	Chlorobenzene	110	% Recovery	1	NA		11/20/00
X00447	XG.2000.1301-3	108-88-3	Toluene	114	% Recovery	1	NA		11/20/00
X00447	XG.2000.1301-3	79-01-6	Trichloroethene	110	% Recovery	1	NA		11/20/00
X00460-002		**SW846 3510B/8270B SVOCs by GC/MS**							
X00460	XG.2000.1328-2	120-82-1	1,2,4-Trichlorobenzene	66	% Recovery	1	NA		12/04/00
X00460	XG.2000.1328-2	106-46-7	1,4-Dichlorobenzene	69	% Recovery	1	NA		12/04/00
X00460	XG.2000.1328-2	121-14-2	2,4-Dinitrotoluene	82	% Recovery	1	NA		12/04/00
X00460	XG.2000.1328-2	95-57-8	2-Chlorophenol	62	% Recovery	1	NA		12/04/00
X00460	XG.2000.1328-2	59-50-7	4-Chloro-3-methylphenol	62	% Recovery	1	NA		12/04/00
X00460	XG.2000.1328-2	100-02-7	4-Nitrophenol	34	% Recovery	1	NA		12/04/00
X00460	XG.2000.1328-2	83-32-9	Acenaphthene	83	% Recovery	1	NA		12/04/00
X00460	XG.2000.1328-2	117-84-0	di-n-Octylpthalate	71	% Recovery	1	NA		12/04/00
X00460	XG.2000.1328-2	621-64-7	n-Nitroso-di-n-propylamine	85	% Recovery	1	NA		12/04/00
X00460	XG.2000.1328-2	87-86-5	Pentachlorophenol	75	% Recovery	1	NA		12/04/00
X00460	XG.2000.1328-2	108-95-2	Phenol	32	% Recovery	1	NA		12/04/00
X00460	XG.2000.1328-2	129-00-0	Pyrene	83	% Recovery	1	NA		12/04/00

QC Type **LCSD: Lab Control Spike Duplicate Accuracy** QC Matrix **WATER**

QC Group	Run Sequence	CAS #	Analyte	Result	Units	Dilution Factor	Detection Limit	Code	Run Date
X00444-003		**SW846 ME/8015A Diesel Range Organics by GC/FID**							
X00444	XG.2000.1288-3		Diesel Range Organics	90	% Recovery	1	NA		11/17/00
X00445-003		**SW846 5030A/8015A GRO by GC/FID**							
X00445	XG.2000.1286-6		Gasoline Range Organics	102	% Recovery	1	NA		11/18/00
X00447-004		**SW846 8260A Purgeable VOCs by GC/MS**							
X00447	XG.2000.1301-4	75-34-3	1,1 Dichloroethene	110	% Recovery	1	NA		11/20/00
X00447	XG.2000.1301-4	106-46-7	1,4 Dichlorobenzene	109	% Recovery	1	NA		11/20/00
X00447	XG.2000.1301-4	71-43-2	Benzene	114	% Recovery	1	NA		11/20/00
X00447	XG.2000.1301-4	108-90-7	Chlorobenzene	110	% Recovery	1	NA		11/20/00
X00447	XG.2000.1301-4	108-88-3	Toluene	115	% Recovery	1	NA		11/20/00
X00447	XG.2000.1301-4	79-01-6	Trichloroethene	112	% Recovery	1	NA		11/20/00

Quality Control Summary

Explanation of codes	
D	*Not applicable due to sample diluti*
L	*Not applicable due to MDL proximity*

Client: CH2MHILL

Project: 0011269 160660 (TO.10) KAFB

X00460-003 SW846 3510B/8270B SVOCs by GC/MS

X00460	XG.2000.1328-3	120-82-1	1,2,4-Trichlorobenzene	63	% Recovery	1	NA		12/04/0
X00460	XG.2000.1328-3	106-46-7	1,4-Dichlorobenzene	65	% Recovery	1	NA		12/04/0
X00460	XG.2000.1328-3	121-14-2	2,4-Dinitrotoluene	83	% Recovery	1	NA		12/04/0
X00460	XG.2000.1328-3	95-57-8	2-Chlorophenol	59	% Recovery	1	NA		12/04/0
X00460	XG.2000.1328-3	59-50-7	4-Chloro-3-methylphenol	61	% Recovery	1	NA		12/04/0
X00460	XG.2000.1328-3	100-02-7	4-Nitrophenol	34	% Recovery	1	NA		12/04/0
X00460	XG.2000.1328-3	83-32-9	Acenaphthene	82	% Recovery	1	NA		12/04/0
X00460	XG.2000.1328-3	117-84-0	di-n-Octylpthalate	76	% Recovery	1	NA		12/04/0
X00460	XG.2000.1328-3	621-64-7	n-Nitroso-di-n-propylamine	84	% Recovery	1	NA		12/04/0
X00460	XG.2000.1328-3	87-86-5	Pentachlorophenol	81	% Recovery	1	NA		12/04/0
X00460	XG.2000.1328-3	108-95-2	Phenol	30	% Recovery	1	NA		12/04/0
X00460	XG.2000.1328-3	129-00-0	Pyrene	85	% Recovery	1	NA		12/04/0

QC Type **LCSD: Lab Control Spike Duplicate Precision** QC Matrix **WATER**

QC Group	Run Sequence	CAS #	Analyte	Result	Units	Dilution Factor	Detection Limit	Code	Run Date
X00444-003		SW846 ME/8015A Diesel Range Organics by GC/FID							
X00444	XG.2000.1288-3		Diesel Range Organics	1	RPD	1	NA		11/17/0
X00445-003		SW846 5030A/8015A GRO by GC/FID							
X00445	XG.2000.1286-6		Gasoline Range Organics	2	RPD	1	NA		11/18
X00447-004		SW846 8260A Purgeable VOCs by GC/MS							
X00447	XG.2000.1301-4	75-34-3	1,1 Dichloroethene	< 1	RPD	1	NA		11/20/0
X00447	XG.2000.1301-4	106-46-7	1,4 Dichlorobenzene	2	RPD	1	NA		11/20/0
X00447	XG.2000.1301-4	71-43-2	Benzene	1	RPD	1	NA		11/20/0
X00447	XG.2000.1301-4	108-90-7	Chlorobenzene	< 1	RPD	1	NA		11/20/0
X00447	XG.2000.1301-4	108-88-3	Toluene	< 1	RPD	1	NA		11/20/0
X00447	XG.2000.1301-4	79-01-6	Trichloroethene	2	RPD	1	NA		11/20/0
X00460-003		SW846 3510B/8270B SVOCs by GC/MS							
X00460	XG.2000.1328-3	120-82-1	1,2,4-Trichlorobenzene	4	RPD	1	NA		12/04/0
X00460	XG.2000.1328-3	106-46-7	1,4-Dichlorobenzene	7	RPD	1	NA		12/04/0
X00460	XG.2000.1328-3	121-14-2	2,4-Dinitrotoluene	1	RPD	1	NA		12/04/0
X00460	XG.2000.1328-3	95-57-8	2-Chlorophenol	5	RPD	1	NA		12/04/0
X00460	XG.2000.1328-3	59-50-7	4-Chloro-3-methylphenol	1	RPD	1	NA		12/04/0
X00460	XG.2000.1328-3	100-02-7	4-Nitrophenol	< 1	RPD	1	NA		12/04/0
X00460	XG.2000.1328-3	83-32-9	Acenaphthene	< 1	RPD	1	NA		12/04/0
X00460	XG.2000.1328-3	117-84-0	di-n-Octylpthalate	6	RPD	1	NA		12/04/0
X00460	XG.2000.1328-3	621-64-7	n-Nitroso-di-n-propylamine	< 1	RPD	1	NA		12/04/0
X00460	XG.2000.1328-3	87-86-5	Pentachlorophenol	8	RPD	1	NA		12/04/0
X00460	XG.2000.1328-3	108-95-2	Phenol	6	RPD	1	NA		12/04/0
X00460	XG.2000.1328-3	129-00-0	Pyrene	1	RPD	1	NA		12/04/0

Quality Control Summary

Explanation of codes	
D	*Not applicable due to sample dilution*
L	*Not applicable due to MDL proximity*

t: CH2MHILL

Project: 0011269 160660 (TO.10) KAFB

QC Type: **MB: Method Blank** QC Matrix: **WATER**

QC Group	Run Sequence	CAS #	Analyte	Result	Units	Dilution Factor	Detection Limit	Code	Run Date
X00444-001		**SW846 ME/8015A Diesel Range Organics by GC/FID**							
X00444	XG.2000.1288-1		Diesel Range Organics	ND	mg / L	1	25		11/17/00
X00444-009		**SW846 ME/8015A Diesel Range Organics by GC/FID**							
X00444	XG.2000.1315-1		Diesel Range Organics	ND	mg / L	1	25		12/01/00
X00444-011		**SW846 ME/8015A Diesel Range Organics by GC/FID**							
X00444	XG.2000.1354-1		Diesel Range Organics	ND	mg / L	1	25		12/12/00
X00445-001		**SW846 5030A/8015A GRO by GC/FID**							
X00445	XG.2000.1286-4		Gasoline Range Organics	ND	mg / L	1	0.05		11/18/00
X00445-007		**SW846 5030A/8015A GRO by GC/FID**							
X00445	XG.2000.1317-9		Gasoline Range Organics	ND	mg / L	1	0.05		12/01/00
X00445-009		**SW846 5030A/8015A GRO by GC/FID**							
X00445	XG.2000.1347-1		Gasoline Range Organics	ND	mg / L	1	0.05		12/08/00
X00447-001		**SW846 8260A Purgeable VOCs by GC/MS**							
[illegible]7	XG.2000.1301-1	75-34-3	1,1 Dichloroethane	ND	ug / L	1	1		11/20/00
[illegible].7	XG.2000.1301-1	75-34-3	1,1 Dichloroethene	ND	ug / L	1	1		11/20/00
X00447	XG.2000.1301-1	71-55-6	1,1,1 Trichloroethane	ND	ug / L	1	1		11/20/00
X00447	XG.2000.1301-1	630-20-6	1,1,1,2 Tetrachloroethane	ND	ug / L	1	1		11/20/00
X00447	XG.2000.1301-1	79-00-5	1,1,2 Trichloroethane	ND	ug / L	1	1		11/20/00
X00447	XG.2000.1301-1	79-34-5	1,1,2,2 Tetrachloroethane	ND	ug / L	1	1		11/20/00
X00447	XG.2000.1301-1	106-93-4	1,2 Dibromoethane (EDB)	ND	ug / L	1	1		11/20/00
X00447	XG.2000.1301-1	95-50-1	1,2 Dichlorobenzene	ND	ug / L	1	1		11/20/00
X00447	XG.2000.1301-1	107-06-2	1,2 Dichloroethane	ND	ug / L	1	1		11/20/00
X00447	XG.2000.1301-1	78-87-5	1,2 Dichloropropane	ND	ug / L	1	1		11/20/00
X00447	XG.2000.1301-1	96-18-4	1,2,3 Trichloropropane	ND	ug / L	1	1		11/20/00
X00447	XG.2000.1301-1	95-63-6	1,2,4-Trimethylbenzene	ND	ug / L	1	1		11/20/00
X00447	XG.2000.1301-1	541-73-1	1,3 Dichlorobenzene	ND	ug / L	1	1		11/20/00
X00447	XG.2000.1301-1	108-67-8	1,3,5-Trimethylbenzene	ND	ug / L	1	1		11/20/00
X00447	XG.2000.1301-1	764-41-0	1,4 Dichloro-2-butene	ND	ug / L	1	10		11/20/00
X00447	XG.2000.1301-1	106-46-7	1,4 Dichlorobenzene	ND	ug / L	1	1		11/20/00
X00447	XG.2000.1301-1	78-93-3	2-Butanone (MEK)	ND	ug / L	1	5		11/20/00
X00447	XG.2000.1301-1	110-75-8	2-Chloroethylvinylether	ND	ug / L	1	5		11/20/00
X00447	XG.2000.1301-1	591-78-6	2-Hexanone (MBK)	ND	ug / L	1	5		11/20/00
X00447	XG.2000.1301-1	108-10-1	4-Methyl-2-pentanone (MIBK)	ND	ug / L	1	5		11/20/00
X00447	XG.2000.1301-1	67-64-1	Acetone	ND	ug / L	1	10		11/20/00
X00447	XG.2000.1301-1	107-02-8	Acrolein	ND	ug / L	1	20		11/20/00
X00447	XG.2000.1301-1	107-13-1	Acrylonitrile	ND	ug / L	1	20		11/20/00
X00447	XG.2000.1301-1	71-43-2	Benzene	ND	ug / L	1	1		11/20/00
X00447	XG.2000.1301-1	75-27-4	Bromodichloromethane	ND	ug / L	1	1		11/20/00
X00447	XG.2000.1301-1	75-25-2	Bromoform	ND	ug / L	1	1		11/20/00
[illegible]7	XG.2000.1301-1	74-83-9	Bromomethane	ND	ug / L	1	5		11/20/00
[illegible]447	XG.2000.1301-1	75-15-0	Carbon disulfide	ND	ug / L	1	5		11/20/00

Quality Control Summary

Explanation of codes	
D	*Not applicable due to sample diluti*
L	*Not applicable due to MDL proxim*

Client: **CH2MHILL**

Project: **0011269** **160660 (TO.10) KAFB**

X00447	XG.2000.1301-1	56-23-5	Carbon tetrachloride	ND	ug / L	1	1		11/20/00
X00447	XG.2000.1301-1	108-90-7	Chlorobenzene	ND	ug / L	1	1		11/20/00
X00447	XG.2000.1301-1	124-48-1	Chlorodibromomethane	ND	ug / L	1	1		11/20/00
X00447	XG.2000.1301-1	75-00-3	Chloroethane	ND	ug / L	1	5		11/20/00
X00447	XG.2000.1301-1	67-66-3	Chloroform	ND	ug / L	1	1		11/20/00
X00447	XG.2000.1301-1	74-87-3	Chloromethane	ND	ug / L	1	5		11/20/00
X00447	XG.2000.1301-1	156-59-2	cis-1,2 dichloroethene	ND	ug / L	1	1		11/20/00
X00447	XG.2000.1301-1	10061-01-5	cis-1,3 dichloropropene	ND	ug / L	1	1		11/20/00
X00447	XG.2000.1301-1	74-95-3	Dibromomethane	ND	ug / L	1	1		11/20/00
X00447	XG.2000.1301-1	97-63-2	Ethyl methacrylate	ND	ug / L	1	5		11/20/00
X00447	XG.2000.1301-1	100-41-4	Ethylbenzene	ND	ug / L	1	1		11/20/00
X00447	XG.2000.1301-1		Freon 113	ND	ug / L	1	5		11/20/00
X00447	XG.2000.1301-1	75-71-8	Freon 12	ND	ug / L	1	10		11/20/00
X00447	XG.2000.1301-1	74-88-4	Iodomethane	ND	ug / L	1	5		11/20/00
X00447	XG.2000.1301-1	1634-04-4	Methyl t-butyl ether (MTBE)	ND	ug / L	1	1		11/20/00
X00447	XG.2000.1301-1	75-09-2	Methylene chloride	ND	ug / L	1	10		11/20/00
X00447	XG.2000.1301-1	91-20-3	Naphthalene	ND	ug / L	1	5		11/20/00
X00447	XG.2000.1301-1	95-47-6	o-Xylene	ND	ug / L	1	1		11/20/00
X00447	XG.2000.1301-1	108-38-3/106-42	p/m Xylenes	ND	ug / L	1	2		11/20/00
X00447	XG.2000.1301-1	100-42-5	Styrene	ND	ug / L	1	1		11/20/00
X00447	XG.2000.1301-1	156-60-5	t-1,2 Dichloroethene	ND	ug / L	1	1		11/20/00
X00447	XG.2000.1301-1	10061-02-6	t-1,3 Dichloropropene	ND	ug / L	1	1		11/20/00
X00447	XG.2000.1301-1	127-18-4	Tetrachloroethene	ND	ug / L	1	1		11/20/[illegible]
X00447	XG.2000.1301-1	108-88-3	Toluene	ND	ug / L	1	1		11/2[illegible]
X00447	XG.2000.1301-1	79-01-6	Trichloroethene	ND	ug / L	1	1		11/20/00
X00447	XG.2000.1301-1	75-69-4	Trichlorofluoromethane	ND	ug / L	1	5		11/20/00
X00447	XG.2000.1301-1	108-05-4	Vinyl acetate	ND	ug / L	1	5		11/20/00
X00447	XG.2000.1301-1	75-01-4	Vinyl chloride	ND	ug / L	1	5		11/20/00
X00447-005		**SW846 8260A Purgeable VOCs by GC/MS**							
X00447	XG.2000.1301-5	75-34-3	1,1 Dichloroethane	ND	ug / L	1	1		11/21/00
X00447	XG.2000.1301-5	75-34-3	1,1 Dichloroethene	ND	ug / L	1	1		11/21/00
X00447	XG.2000.1301-5	71-55-6	1,1,1 Trichloroethane	ND	ug / L	1	1		11/21/00
X00447	XG.2000.1301-5	630-20-6	1,1,1,2 Tetrachloroethane	ND	ug / L	1	1		11/21/00
X00447	XG.2000.1301-5	79-00-5	1,1,2 Trichloroethane	ND	ug / L	1	1		11/21/00
X00447	XG.2000.1301-5	79-34-5	1,1,2,2 Tetrachloroethane	ND	ug / L	1	1		11/21/00
X00447	XG.2000.1301-5	106-93-4	1,2 Dibromoethane (EDB)	ND	ug / L	1	1		11/21/00
X00447	XG.2000.1301-5	95-50-1	1,2 Dichlorobenzene	ND	ug / L	1	1		11/21/00
X00447	XG.2000.1301-5	107-06-2	1,2 Dichloroethane	ND	ug / L	1	1		11/21/00
X00447	XG.2000.1301-5	78-87-5	1,2 Dichloropropane	ND	ug / L	1	1		11/21/00
X00447	XG.2000.1301-5	96-18-4	1,2,3 Trichloropropane	ND	ug / L	1	1		11/21/00
X00447	XG.2000.1301-5	95-63-6	1,2,4-Trimethylbenzene	ND	ug / L	1	1		11/21/00
X00447	XG.2000.1301-5	541-73-1	1,3 Dichlorobenzene	ND	ug / L	1	1		11/21/00
X00447	XG.2000.1301-5	108-67-8	1,3,5-Trimethylbenzene	ND	ug / L	1	1		11/21/00
X00447	XG.2000.1301-5	764-41-0	1,4 Dichloro-2-butene	ND	ug / L	1	10		11/21/00
X00447	XG.2000.1301-5	106-46-7	1,4 Dichlorobenzene	ND	ug / L	1	1		11/21/00
X00447	XG.2000.1301-5	78-93-3	2-Butanone (MEK)	ND	ug / L	1	5		11/21/00
X00447	XG.2000.1301-5	110-75-8	2-Chloroethylvinylether	ND	ug / L	1	5		11/21/00
X00447	XG.2000.1301-5	591-78-6	2-Hexanone (MBK)	ND	ug / L	1	5		11/21/00
X00447	XG.2000.1301-5	108-10-1	4-Methyl-2-pentanone (MIBK)	ND	ug / L	1	5		11/2[illegible]

Quality Control Summary

Explanation of codes	
D	*Not applicable due to sample dilution*
L	*Not applicable due to MDL proximity*

nt: CH2MHILL

ect: 0011269 160660 (TO.10) KAFB

X00447	XG.2000.1301-5	67-64-1	Acetone	ND	ug / L	1	10		11/21/00
X00447	XG.2000.1301-5	107-02-8	Acrolein	ND	ug / L	1	20		11/21/00
X00447	XG.2000.1301-5	107-13-1	Acrylonitrile	ND	ug / L	1	20		11/21/00
X00447	XG.2000.1301-5	71-43-2	Benzene	ND	ug / L	1	1		11/21/00
X00447	XG.2000.1301-5	75-27-4	Bromodichloromethane	ND	ug / L	1	1		11/21/00
X00447	XG.2000.1301-5	75-25-2	Bromoform	ND	ug / L	1	1		11/21/00
X00447	XG.2000.1301-5	74-83-9	Bromomethane	ND	ug / L	1	5		11/21/00
X00447	XG.2000.1301-5	75-15-0	Carbon disulfide	ND	ug / L	1	5		11/21/00
X00447	XG.2000.1301-5	56-23-5	Carbon tetrachloride	ND	ug / L	1	1		11/21/00
X00447	XG.2000.1301-5	108-90-7	Chlorobenzene	ND	ug / L	1	1		11/21/00
X00447	XG.2000.1301-5	124-48-1	Chlorodibromomethane	ND	ug / L	1	1		11/21/00
X00447	XG.2000.1301-5	75-00-3	Chloroethane	ND	ug / L	1	5		11/21/00
X00447	XG.2000.1301-5	67-66-3	Chloroform	ND	ug / L	1	1		11/21/00
X00447	XG.2000.1301-5	74-87-3	Chloromethane	ND	ug / L	1	5		11/21/00
X00447	XG.2000.1301-5	156-59-2	cis-1,2 dichloroethene	ND	ug / L	1	1		11/21/00
X00447	XG.2000.1301-5	10061-01-5	cis-1,3 dichloropropene	ND	ug / L	1	1		11/21/00
X00447	XG.2000.1301-5	74-95-3	Dibromomethane	ND	ug / L	1	1		11/21/00
X00447	XG.2000.1301-5	97-63-2	Ethyl methacrylate	ND	ug / L	1	5		11/21/00
X00447	XG.2000.1301-5	100-41-4	Ethylbenzene	ND	ug / L	1	1		11/21/00
X00447	XG.2000.1301-5		Freon 113	ND	ug / L	1	5		11/21/00
X00447	XG.2000.1301-5	75-71-8	Freon 12	ND	ug / L	1	10		11/21/00
X00447	XG.2000.1301-5	74-88-4	Iodomethane	ND	ug / L	1	5		11/21/00
X00447	XG.2000.1301-5	1634-04-4	Methyl t-butyl ether (MTBE)	ND	ug / L	1	1		11/21/00
7	XG.2000.1301-5	75-09-2	Methylene chloride	ND	ug / L	1	10		11/21/00
X00447	XG.2000.1301-5	91-20-3	Naphthalene	ND	ug / L	1	5		11/21/00
X00447	XG.2000.1301-5	95-47-6	o-Xylene	ND	ug / L	1	1		11/21/00
X00447	XG.2000.1301-5	108-38-3/106-42	p/m Xylenes	ND	ug / L	1	2		11/21/00
X00447	XG.2000.1301-5	100-42-5	Styrene	ND	ug / L	1	1		11/21/00
X00447	XG.2000.1301-5	156-60-5	t-1,2 Dichloroethene	ND	ug / L	1	1		11/21/00
X00447	XG.2000.1301-5	10061-02-6	t-1,3 Dichloropropene	ND	ug / L	1	1		11/21/00
X00447	XG.2000.1301-5	127-18-4	Tetrachloroethene	ND	ug / L	1	1		11/21/00
X00447	XG.2000.1301-5	108-88-3	Toluene	ND	ug / L	1	1		11/21/00
X00447	XG.2000.1301-5	79-01-6	Trichloroethene	ND	ug / L	1	1		11/21/00
X00447	XG.2000.1301-5	75-69-4	Trichlorofluoromethane	ND	ug / L	1	5		11/21/00
X00447	XG.2000.1301-5	108-05-4	Vinyl acetate	ND	ug / L	1	5		11/21/00
X00447	XG.2000.1301-5	75-01-4	Vinyl chloride	ND	ug / L	1	5		11/21/00

X00447-012 **SW846 8260A Purgeable VOCs by GC/MS**

X00447	XG.2000.1314-1	75-34-3	1,1 Dichloroethane	ND	ug / L	1	1		11/30/00
X00447	XG.2000.1314-1	75-34-3	1,1 Dichloroethene	ND	ug / L	1	1		11/30/00
X00447	XG.2000.1314-1	71-55-6	1,1,1 Trichloroethane	ND	ug / L	1	1		11/30/00
X00447	XG.2000.1314-1	630-20-6	1,1,1,2 Tetrachloroethane	ND	ug / L	1	1		11/30/00
X00447	XG.2000.1314-1	79-00-5	1,1,2 Trichloroethane	ND	ug / L	1	1		11/30/00
X00447	XG.2000.1314-1	79-34-5	1,1,2,2 Tetrachloroethane	ND	ug / L	1	1		11/30/00
X00447	XG.2000.1314-1	106-93-4	1,2 Dibromoethane (EDB)	ND	ug / L	1	1		11/30/00
X00447	XG.2000.1314-1	95-50-1	1,2 Dichlorobenzene	ND	ug / L	1	1		11/30/00
X00447	XG.2000.1314-1	107-06-2	1,2 Dichloroethane	ND	ug / L	1	1		11/30/00
X00447	XG.2000.1314-1	78-87-5	1,2 Dichloropropane	ND	ug / L	1	1		11/30/00
17	XG.2000.1314-1	96-18-4	1,2,3 Trichloropropane	ND	ug / L	1	1		11/30/00
7	XG.2000.1314-1	95-63-6	1,2,4-Trimethylbenzene	ND	ug / L	1	1		11/30/00

Quality Control Summary

Explanation of codes	
D	*Not applicable due to sample dilut*
L	*Not applicable due to MDL proxim*

Client: **CH2MHILL**

Project: **0011269** **160660 (TO.10) KAFB**

X00447	XG.2000.1314-1	541-73-1	1,3 Dichlorobenzene	ND	ug / L	1	1		11/30/00
X00447	XG.2000.1314-1	108-67-8	1,3,5-Trimethylbenzene	ND	ug / L	1	1		11/30/00
X00447	XG.2000.1314-1	764-41-0	1,4 Dichloro-2-butene	ND	ug / L	1	10		11/30/00
X00447	XG.2000.1314-1	106-46-7	1,4 Dichlorobenzene	ND	ug / L	1	1		11/30/00
X00447	XG.2000.1314-1	78-93-3	2-Butanone (MEK)	ND	ug / L	1	5		11/30/00
X00447	XG.2000.1314-1	110-75-8	2-Chloroethylvinylether	ND	ug / L	1	5		11/30/00
X00447	XG.2000.1314-1	591-78-6	2-Hexanone (MBK)	ND	ug / L	1	5		11/30/00
X00447	XG.2000.1314-1	108-10-1	4-Methyl-2-pentanone (MIBK)	ND	ug / L	1	5		11/30/00
X00447	XG.2000.1314-1	67-64-1	Acetone	ND	ug / L	1	10		11/30/00
X00447	XG.2000.1314-1	107-02-8	Acrolein	ND	ug / L	1	20		11/30/00
X00447	XG.2000.1314-1	107-13-1	Acrylonitrile	ND	ug / L	1	20		11/30/00
X00447	XG.2000.1314-1	71-43-2	Benzene	ND	ug / L	1	1		11/30/00
X00447	XG.2000.1314-1	75-27-4	Bromodichloromethane	ND	ug / L	1	1		11/30/00
X00447	XG.2000.1314-1	75-25-2	Bromoform	ND	ug / L	1	1		11/30/00
X00447	XG.2000.1314-1	74-83-9	Bromomethane	ND	ug / L	1	5		11/30/00
X00447	XG.2000.1314-1	75-15-0	Carbon disulfide	ND	ug / L	1	5		11/30/00
X00447	XG.2000.1314-1	56-23-5	Carbon tetrachloride	ND	ug / L	1	1		11/30/00
X00447	XG.2000.1314-1	108-90-7	Chlorobenzene	ND	ug / L	1	1		11/30/00
X00447	XG.2000.1314-1	124-48-1	Chlorodibromomethane	ND	ug / L	1	1		11/30/00
X00447	XG.2000.1314-1	75-00-3	Chloroethane	ND	ug / L	1	5		11/30/00
X00447	XG.2000.1314-1	67-66-3	Chloroform	ND	ug / L	1	1		11/30/00
X00447	XG.2000.1314-1	74-87-3	Chloromethane	ND	ug / L	1	5		11/30/00
X00447	XG.2000.1314-1	156-59-2	cis-1,2 dichloroethene	ND	ug / L	1	1		11/30/00
X00447	XG.2000.1314-1	10061-01-5	cis-1,3 dichloropropene	ND	ug / L	1	1		11/3
X00447	XG.2000.1314-1	74-95-3	Dibromomethane	ND	ug / L	1	1		11/3
X00447	XG.2000.1314-1	97-63-2	Ethyl methacrylate	ND	ug / L	1	5		11/30/00
X00447	XG.2000.1314-1	100-41-4	Ethylbenzene	ND	ug / L	1	1		11/30/00
X00447	XG.2000.1314-1		Freon 113	ND	ug / L	1	5		11/30/00
X00447	XG.2000.1314-1	75-71-8	Freon 12	ND	ug / L	1	10		11/30/00
X00447	XG.2000.1314-1	74-88-4	Iodomethane	ND	ug / L	1	5		11/30/00
X00447	XG.2000.1314-1	1634-04-4	Methyl t-butyl ether (MTBE)	ND	ug / L	1	1		11/30/00
X00447	XG.2000.1314-1	75-09-2	Methylene chloride	ND	ug / L	1	10		11/30/00
X00447	XG.2000.1314-1	91-20-3	Naphthalene	ND	ug / L	1	5		11/30/00
X00447	XG.2000.1314-1	95-47-6	o-Xylene	ND	ug / L	1	1		11/30/00
X00447	XG.2000.1314-1	108-38-3/106-42	p/m Xylenes	ND	ug / L	1	2		11/30/00
X00447	XG.2000.1314-1	100-42-5	Styrene	ND	ug / L	1	1		11/30/00
X00447	XG.2000.1314-1	156-60-5	t-1,2 Dichloroethene	ND	ug / L	1	1		11/30/00
X00447	XG.2000.1314-1	10061-02-6	t-1,3 Dichloropropene	ND	ug / L	1	1		11/30/00
X00447	XG.2000.1314-1	127-18-4	Tetrachloroethene	ND	ug / L	1	1		11/30/00
X00447	XG.2000.1314-1	108-88-3	Toluene	ND	ug / L	1	1		11/30/00
X00447	XG.2000.1314-1	79-01-6	Trichloroethene	ND	ug / L	1	1		11/30/00
X00447	XG.2000.1314-1	75-69-4	Trichlorofluoromethane	ND	ug / L	1	5		11/30/00
X00447	XG.2000.1314-1	108-05-4	Vinyl acetate	ND	ug / L	1	5		11/30/00
X00447	XG.2000.1314-1	75-01-4	Vinyl chloride	ND	ug / L	1	5		11/30/00

X00447-017 **SW846 8260A Purgeable VOCs by GC/MS**

X00447	XG.2000.1314-6	75-34-3	1,1 Dichloroethane	ND	ug / L	1	1		12/01/00
X00447	XG.2000.1314-6	75-34-3	1,1 Dichloroethene	ND	ug / L	1	1		12/01/00
X00447	XG.2000.1314-6	71-55-6	1,1,1 Trichloroethane	ND	ug / L	1	1		12/01/00
X00447	XG.2000.1314-6	630-20-6	1,1,1,2 Tetrachloroethane	ND	ug / L	1	1		12/

Quality Control Summary

Explanation of codes	
D	*Not applicable due to sample dilution*
L	*Not applicable due to MDL proximity*

ıt: CH2MHILL

Project: 0011269 160660 (TO.10) KAFB

X00447	XG.2000.1314-6	79-00-5	1,1,2 Trichloroethane	ND	ug / L	1	1		12/01/00
X00447	XG.2000.1314-6	79-34-5	1,1,2,2 Tetrachloroethane	ND	ug / L	1	1		12/01/00
X00447	XG.2000.1314-6	106-93-4	1,2 Dibromoethane (EDB)	ND	ug / L	1	1		12/01/00
X00447	XG.2000.1314-6	95-50-1	1,2 Dichlorobenzene	ND	ug / L	1	1		12/01/00
X00447	XG.2000.1314-6	107-06-2	1,2 Dichloroethane	ND	ug / L	1	1		12/01/00
X00447	XG.2000.1314-6	78-87-5	1,2 Dichloropropane	ND	ug / L	1	1		12/01/00
X00447	XG.2000.1314-6	96-18-4	1,2,3 Trichloropropane	ND	ug / L	1	1		12/01/00
X00447	XG.2000.1314-6	95-63-6	1,2,4-Trimethylbenzene	ND	ug / L	1	1		12/01/00
X00447	XG.2000.1314-6	541-73-1	1,3 Dichlorobenzene	ND	ug / L	1	1		12/01/00
X00447	XG.2000.1314-6	108-67-8	1,3,5-Trimethylbenzene	ND	ug / L	1	1		12/01/00
X00447	XG.2000.1314-6	764-41-0	1,4 Dichloro-2-butene	ND	ug / L	1	10		12/01/00
X00447	XG.2000.1314-6	106-46-7	1,4 Dichlorobenzene	ND	ug / L	1	1		12/01/00
X00447	XG.2000.1314-6	78-93-3	2-Butanone (MEK)	ND	ug / L	1	5		12/01/00
X00447	XG.2000.1314-6	110-75-8	2-Chloroethylvinylether	ND	ug / L	1	5		12/01/00
X00447	XG.2000.1314-6	591-78-6	2-Hexanone (MBK)	ND	ug / L	1	5		12/01/00
X00447	XG.2000.1314-6	108-10-1	4-Methyl-2-pentanone (MIBK)	ND	ug / L	1	5		12/01/00
X00447	XG.2000.1314-6	67-64-1	Acetone	ND	ug / L	1	10		12/01/00
X00447	XG.2000.1314-6	107-02-8	Acrolein	ND	ug / L	1	20		12/01/00
X00447	XG.2000.1314-6	107-13-1	Acrylonitrile	ND	ug / L	1	20		12/01/00
X00447	XG.2000.1314-6	71-43-2	Benzene	ND	ug / L	1	1		12/01/00
X00447	XG.2000.1314-6	75-27-4	Bromodichloromethane	ND	ug / L	1	1		12/01/00
X00447	XG.2000.1314-6	75-25-2	Bromoform	ND	ug / L	1	1		12/01/00
X00447	XG.2000.1314-6	74-83-9	Bromomethane	ND	ug / L	1	5		12/01/00
7	XG.2000.1314-6	75-15-0	Carbon disulfide	ND	ug / L	1	5		12/01/00
X00447	XG.2000.1314-6	56-23-5	Carbon tetrachloride	ND	ug / L	1	1		12/01/00
X00447	XG.2000.1314-6	108-90-7	Chlorobenzene	ND	ug / L	1	1		12/01/00
X00447	XG.2000.1314-6	124-48-1	Chlorodibromomethane	ND	ug / L	1	1		12/01/00
X00447	XG.2000.1314-6	75-00-3	Chloroethane	ND	ug / L	1	5		12/01/00
X00447	XG.2000.1314-6	67-66-3	Chloroform	ND	ug / L	1	1		12/01/00
X00447	XG.2000.1314-6	74-87-3	Chloromethane	ND	ug / L	1	5		12/01/00
X00447	XG.2000.1314-6	156-59-2	cis-1,2 dichloroethene	ND	ug / L	1	1		12/01/00
X00447	XG.2000.1314-6	10061-01-5	cis-1,3 dichloropropene	ND	ug / L	1	1		12/01/00
X00447	XG.2000.1314-6	74-95-3	Dibromomethane	ND	ug / L	1	1		12/01/00
X00447	XG.2000.1314-6	97-63-2	Ethyl methacrylate	ND	ug / L	1	5		12/01/00
X00447	XG.2000.1314-6	100-41-4	Ethylbenzene	ND	ug / L	1	1		12/01/00
X00447	XG.2000.1314-6		Freon 113	ND	ug / L	1	5		12/01/00
X00447	XG.2000.1314-6	75-71-8	Freon 12	ND	ug / L	1	10		12/01/00
X00447	XG.2000.1314-6	74-88-4	Iodomethane	ND	ug / L	1	5		12/01/00
X00447	XG.2000.1314-6	1634-04-4	Methyl t-butyl ether (MTBE)	ND	ug / L	1	1		12/01/00
X00447	XG.2000.1314-6	75-09-2	Methylene chloride	ND	ug / L	1	10		12/01/00
X00447	XG.2000.1314-6	91-20-3	Naphthalene	ND	ug / L	1	5		12/01/00
X00447	XG.2000.1314-6	95-47-6	o-Xylene	ND	ug / L	1	1		12/01/00
X00447	XG.2000.1314-6	108-38-3/106-42	p/m Xylenes	ND	ug / L	1	2		12/01/00
X00447	XG.2000.1314-6	100-42-5	Styrene	ND	ug / L	1	1		12/01/00
X00447	XG.2000.1314-6	156-60-5	t-1,2 Dichloroethene	ND	ug / L	1	1		12/01/00
X00447	XG.2000.1314-6	10061-02-6	t-1,3 Dichloropropene	ND	ug / L	1	1		12/01/00
X00447	XG.2000.1314-6	127-18-4	Tetrachloroethene	ND	ug / L	1	1		12/01/00
X00447	XG.2000.1314-6	108-88-3	Toluene	ND	ug / L	1	1		12/01/00
7	XG.2000.1314-6	79-01-6	Trichloroethene	ND	ug / L	1	1		12/01/00
.447	XG.2000.1314-6	75-69-4	Trichlorofluoromethane	ND	ug / L	1	5		12/01/00

Quality Control Summary

Explanation of codes	
D	*Not applicable due to sample diluti*
L	*Not applicable due to MDL proximit*

Client: **CH2MHILL**

Project: **0011269** **160660 (TO.10) KAFB**

X00447	XG.2000.1314-6	108-05-4	Vinyl acetate	ND	ug / L	1	5		12/01/00
X00447	XG.2000.1314-6	75-01-4	Vinyl chloride	ND	ug / L	1	5		12/01/00
X00447-025		**SW846 8260A Purgeable VOCs by GC/MS**							
X00447	XG.2000.1330-1	75-34-3	1,1 Dichloroethane	ND	ug / L	1	1		12/04/00
X00447	XG.2000.1330-1	75-34-3	1,1 Dichloroethene	ND	ug / L	1	1		12/04/00
X00447	XG.2000.1330-1	71-55-6	1,1,1 Trichloroethane	ND	ug / L	1	1		12/04/00
X00447	XG.2000.1330-1	630-20-6	1,1,1,2 Tetrachloroethane	ND	ug / L	1	1		12/04/00
X00447	XG.2000.1330-1	79-00-5	1,1,2 Trichloroethane	ND	ug / L	1	1		12/04/00
X00447	XG.2000.1330-1	79-34-5	1,1,2,2 Tetrachloroethane	ND	ug / L	1	1		12/04/00
X00447	XG.2000.1330-1	106-93-4	1,2 Dibromoethane (EDB)	ND	ug / L	1	1		12/04/00
X00447	XG.2000.1330-1	95-50-1	1,2 Dichlorobenzene	ND	ug / L	1	1		12/04/00
X00447	XG.2000.1330-1	107-06-2	1,2 Dichloroethane	ND	ug / L	1	1		12/04/00
X00447	XG.2000.1330-1	78-87-5	1,2 Dichloropropane	ND	ug / L	1	1		12/04/00
X00447	XG.2000.1330-1	96-18-4	1,2,3 Trichloropropane	ND	ug / L	1	1		12/04/00
X00447	XG.2000.1330-1	95-63-6	1,2,4-Trimethylbenzene	ND	ug / L	1	1		12/04/00
X00447	XG.2000.1330-1	541-73-1	1,3 Dichlorobenzene	ND	ug / L	1	1		12/04/00
X00447	XG.2000.1330-1	108-67-8	1,3,5-Trimethylbenzene	ND	ug / L	1	1		12/04/00
X00447	XG.2000.1330-1	764-41-0	1,4 Dichloro-2-butene	ND	ug / L	1	10		12/04/00
X00447	XG.2000.1330-1	106-46-7	1,4 Dichlorobenzene	ND	ug / L	1	1		12/04/00
X00447	XG.2000.1330-1	78-93-3	2-Butanone (MEK)	ND	ug / L	1	5		12/04/00
X00447	XG.2000.1330-1	110-75-8	2-Chloroethylvinylether	ND	ug / L	1	5		12/04/00
X00447	XG.2000.1330-1	591-78-6	2-Hexanone (MBK)	ND	ug / L	1	5		12/04/00
X00447	XG.2000.1330-1	108-10-1	4-Methyl-2-pentanone (MIBK)	ND	ug / L	1	5		12/04/[illegible]
X00447	XG.2000.1330-1	67-64-1	Acetone	ND	ug / L	1	10		12/04[illegible]
X00447	XG.2000.1330-1	107-02-8	Acrolein	ND	ug / L	1	20		12/04/00
X00447	XG.2000.1330-1	107-13-1	Acrylonitrile	ND	ug / L	1	20		12/04/00
X00447	XG.2000.1330-1	71-43-2	Benzene	ND	ug / L	1	1		12/04/00
X00447	XG.2000.1330-1	75-27-4	Bromodichloromethane	ND	ug / L	1	1		12/04/00
X00447	XG.2000.1330-1	75-25-2	Bromoform	ND	ug / L	1	1		12/04/00
X00447	XG.2000.1330-1	74-83-9	Bromomethane	ND	ug / L	1	5		12/04/00
X00447	XG.2000.1330-1	75-15-0	Carbon disulfide	ND	ug / L	1	5		12/04/00
X00447	XG.2000.1330-1	56-23-5	Carbon tetrachloride	ND	ug / L	1	1		12/04/00
X00447	XG.2000.1330-1	108-90-7	Chlorobenzene	ND	ug / L	1	1		12/04/00
X00447	XG.2000.1330-1	124-48-1	Chlorodibromomethane	ND	ug / L	1	1		12/04/00
X00447	XG.2000.1330-1	75-00-3	Chloroethane	ND	ug / L	1	5		12/04/00
X00447	XG.2000.1330-1	67-66-3	Chloroform	ND	ug / L	1	1		12/04/00
X00447	XG.2000.1330-1	74-87-3	Chloromethane	ND	ug / L	1	5		12/04/00
X00447	XG.2000.1330-1	156-59-2	cis-1,2 dichloroethene	ND	ug / L	1	1		12/04/00
X00447	XG.2000.1330-1	10061-01-5	cis-1,3 dichloropropene	ND	ug / L	1	1		12/04/00
X00447	XG.2000.1330-1	74-95-3	Dibromomethane	ND	ug / L	1	1		12/04/00
X00447	XG.2000.1330-1	97-63-2	Ethyl methacrylate	ND	ug / L	1	5		12/04/00
X00447	XG.2000.1330-1	100-41-4	Ethylbenzene	ND	ug / L	1	1		12/04/00
X00447	XG.2000.1330-1		Freon 113	ND	ug / L	1	5		12/04/00
X00447	XG.2000.1330-1	75-71-8	Freon 12	ND	ug / L	1	10		12/04/00
X00447	XG.2000.1330-1	74-88-4	Iodomethane	ND	ug / L	1	5		12/04/00
X00447	XG.2000.1330-1	1634-04-4	Methyl t-butyl ether (MTBE)	ND	ug / L	1	1		12/04/00
X00447	XG.2000.1330-1	75-09-2	Methylene chloride	ND	ug / L	1	10		12/04/00
X00447	XG.2000.1330-1	91-20-3	Naphthalene	ND	ug / L	1	5		12/04/00
X00447	XG.2000.1330-1	95-47-6	o-Xylene	ND	ug / L	1	1		12/04/[illegible]

Quality Control Summary

Explanation of codes	
D	*Not applicable due to sample dilution*
L	*Not applicable due to MDL proximity*

nt: CH2MHILL

Project: 0011269 160660 (TO.10) KAFB

X00447	XG.2000.1330-1	108-38-3/106-42	p/m Xylenes	ND	ug / L	1	2		12/04/00
X00447	XG.2000.1330-1	100-42-5	Styrene	ND	ug / L	1	1		12/04/00
X00447	XG.2000.1330-1	156-60-5	t-1,2 Dichloroethene	ND	ug / L	1	1		12/04/00
X00447	XG.2000.1330-1	10061-02-6	t-1,3 Dichloropropene	ND	ug / L	1	1		12/04/00
X00447	XG.2000.1330-1	127-18-4	Tetrachloroethene	ND	ug / L	1	1		12/04/00
X00447	XG.2000.1330-1	108-88-3	Toluene	ND	ug / L	1	1		12/04/00
X00447	XG.2000.1330-1	79-01-6	Trichloroethene	ND	ug / L	1	1		12/04/00
X00447	XG.2000.1330-1	75-69-4	Trichlorofluoromethane	ND	ug / L	1	5		12/04/00
X00447	XG.2000.1330-1	108-05-4	Vinyl acetate	ND	ug / L	1	5		12/04/00
X00447	XG.2000.1330-1	75-01-4	Vinyl chloride	ND	ug / L	1	5		12/04/00
X00447-029		**SW846 8260A Purgeable VOCs by GC/MS**							
X00447	XG.2000.1330-5	75-34-3	1,1 Dichloroethane	ND	ug / L	1	1		12/05/00
X00447	XG.2000.1330-5	75-34-3	1,1 Dichloroethene	ND	ug / L	1	1		12/05/00
X00447	XG.2000.1330-5	71-55-6	1,1,1 Trichloroethane	ND	ug / L	1	1		12/05/00
X00447	XG.2000.1330-5	630-20-6	1,1,1,2 Tetrachloroethane	ND	ug / L	1	1		12/05/00
X00447	XG.2000.1330-5	79-00-5	1,1,2 Trichloroethane	ND	ug / L	1	1		12/05/00
X00447	XG.2000.1330-5	79-34-5	1,1,2,2 Tetrachloroethane	ND	ug / L	1	1		12/05/00
X00447	XG.2000.1330-5	106-93-4	1,2 Dibromoethane (EDB)	ND	ug / L	1	1		12/05/00
X00447	XG.2000.1330-5	95-50-1	1,2 Dichlorobenzene	ND	ug / L	1	1		12/05/00
X00447	XG.2000.1330-5	107-06-2	1,2 Dichloroethane	ND	ug / L	1	1		12/05/00
X00447	XG.2000.1330-5	78-87-5	1,2 Dichloropropane	ND	ug / L	1	1		12/05/00
X00447	XG.2000.1330-5	96-18-4	1,2,3 Trichloropropane	ND	ug / L	1	1		12/05/00
47	XG.2000.1330-5	95-63-6	1,2,4-Trimethylbenzene	ND	ug / L	1	1		12/05/00
X00447	XG.2000.1330-5	541-73-1	1,3 Dichlorobenzene	ND	ug / L	1	1		12/05/00
X00447	XG.2000.1330-5	108-67-8	1,3,5-Trimethylbenzene	ND	ug / L	1	1		12/05/00
X00447	XG.2000.1330-5	764-41-0	1,4 Dichloro-2-butene	ND	ug / L	1	10		12/05/00
X00447	XG.2000.1330-5	106-46-7	1,4 Dichlorobenzene	ND	ug / L	1	1		12/05/00
X00447	XG.2000.1330-5	78-93-3	2-Butanone (MEK)	ND	ug / L	1	5		12/05/00
X00447	XG.2000.1330-5	110-75-8	2-Chloroethylvinylether	ND	ug / L	1	5		12/05/00
X00447	XG.2000.1330-5	591-78-6	2-Hexanone (MBK)	ND	ug / L	1	5		12/05/00
X00447	XG.2000.1330-5	108-10-1	4-Methyl-2-pentanone (MIBK)	ND	ug / L	1	5		12/05/00
X00447	XG.2000.1330-5	67-64-1	Acetone	ND	ug / L	1	10		12/05/00
X00447	XG.2000.1330-5	107-02-8	Acrolein	ND	ug / L	1	20		12/05/00
X00447	XG.2000.1330-5	107-13-1	Acrylonitrile	ND	ug / L	1	20		12/05/00
X00447	XG.2000.1330-5	71-43-2	Benzene	ND	ug / L	1	1		12/05/00
X00447	XG.2000.1330-5	75-27-4	Bromodichloromethane	ND	ug / L	1	1		12/05/00
X00447	XG.2000.1330-5	75-25-2	Bromoform	ND	ug / L	1	1		12/05/00
X00447	XG.2000.1330-5	74-83-9	Bromomethane	ND	ug / L	1	5		12/05/00
X00447	XG.2000.1330-5	75-15-0	Carbon disulfide	ND	ug / L	1	5		12/05/00
X00447	XG.2000.1330-5	56-23-5	Carbon tetrachloride	ND	ug / L	1	1		12/05/00
X00447	XG.2000.1330-5	108-90-7	Chlorobenzene	ND	ug / L	1	1		12/05/00
X00447	XG.2000.1330-5	124-48-1	Chlorodibromomethane	ND	ug / L	1	1		12/05/00
X00447	XG.2000.1330-5	75-00-3	Chloroethane	ND	ug / L	1	5		12/05/00
X00447	XG.2000.1330-5	67-66-3	Chloroform	ND	ug / L	1	1		12/05/00
X00447	XG.2000.1330-5	74-87-3	Chloromethane	ND	ug / L	1	5		12/05/00
X00447	XG.2000.1330-5	156-59-2	cis-1,2 dichloroethene	ND	ug / L	1	1		12/05/00
X00447	XG.2000.1330-5	10061-01-5	cis-1,3 dichloropropene	ND	ug / L	1	1		12/05/00
447	XG.2000.1330-5	74-95-3	Dibromomethane	ND	ug / L	1	1		12/05/00
447	XG.2000.1330-5	97-63-2	Ethyl methacrylate	ND	ug / L	1	5		12/05/00

Quality Control Summary

Explanation of codes	
D	*Not applicable due to sample diluti*
L	*Not applicable due to MDL proximi*

Client: CH2MHILL

Project: 0011269 160660 (TO.10) KAFB

X00447	XG.2000.1330-5	100-41-4	Ethylbenzene	ND	ug / L	1	1		12/05/0
X00447	XG.2000.1330-5		Freon 113	ND	ug / L	1	5		12/05/0
X00447	XG.2000.1330-5	75-71-8	Freon 12	ND	ug / L	1	10		12/05/0
X00447	XG.2000.1330-5	74-88-4	Iodomethane	ND	ug / L	1	5		12/05/0
X00447	XG.2000.1330-5	1634-04-4	Methyl t-butyl ether (MTBE)	ND	ug / L	1	1		12/05/0
X00447	XG.2000.1330-5	75-09-2	Methylene chloride	ND	ug / L	1	10		12/05/0
X00447	XG.2000.1330-5	91-20-3	Naphthalene	ND	ug / L	1	5		12/05/0
X00447	XG.2000.1330-5	95-47-6	o-Xylene	ND	ug / L	1	1		12/05/0
X00447	XG.2000.1330-5	108-38-3/106-42	p/m Xylenes	ND	ug / L	1	2		12/05/0
X00447	XG.2000.1330-5	100-42-5	Styrene	ND	ug / L	1	1		12/05/0
X00447	XG.2000.1330-5	156-60-5	t-1,2 Dichloroethene	ND	ug / L	1	1		12/05/0
X00447	XG.2000.1330-5	10061-02-6	t-1,3 Dichloropropene	ND	ug / L	1	1		12/05/0
X00447	XG.2000.1330-5	127-18-4	Tetrachloroethene	ND	ug / L	1	1		12/05/0
X00447	XG.2000.1330-5	108-88-3	Toluene	ND	ug / L	1	1		12/05/0
X00447	XG.2000.1330-5	79-01-6	Trichloroethene	ND	ug / L	1	1		12/05/0
X00447	XG.2000.1330-5	75-69-4	Trichlorofluoromethane	ND	ug / L	1	5		12/05/0
X00447	XG.2000.1330-5	108-05-4	Vinyl acetate	ND	ug / L	1	5		12/05/0
X00447	XG.2000.1330-5	75-01-4	Vinyl chloride	ND	ug / L	1	5		12/05/0

X00460-001 **SW846 3510B/8270B SVOCs by GC/MS**

X00460	XG.2000.1328-1	120-82-1	1,2,4-Trichlorobenzene	ND	ug / L	1	1		12/04/0
X00460	XG.2000.1328-1	95-50-1	1,2-Dichlorobenzene	ND	ug / L	1	1		12/04/0
X00460	XG.2000.1328-1	541-73-1	1,3-Dichlorobenzene	ND	ug / L	1	1		12/04/0
X00460	XG.2000.1328-1	106-46-7	1,4-Dichlorobenzene	ND	ug / L	1	1		12/0
X00460	XG.2000.1328-1	90-12-0	1-Methylnaphthalene	ND	ug / L	1	1		12/04
X00460	XG.2000.1328-1	58-90-2	2,3,4,6-Tetrachlorophenol	ND	ug / L	1	5		12/04/0
X00460	XG.2000.1328-1	95-95-4	2,4,5-Trichlorophenol	ND	ug / L	1	5		12/04/0
X00460	XG.2000.1328-1	88-06-2	2,4,6-Trichlorophenol	ND	ug / L	1	5		12/04/0
X00460	XG.2000.1328-1	120-83-2	2,4-Dichlorophenol	ND	ug / L	1	5		12/04/0
X00460	XG.2000.1328-1	105-67-9	2,4-Dimethylphenol	ND	ug / L	1	1		12/04/0
X00460	XG.2000.1328-1	51-28-5	2,4-Dinitrophenol	ND	ug / L	1	10		12/04/0
X00460	XG.2000.1328-1	121-14-2	2,4-Dinitrotoluene	ND	ug / L	1	5		12/04/0
X00460	XG.2000.1328-1	606-20-2	2,6-Dinitrotoluene	ND	ug / L	1	5		12/04/0
X00460	XG.2000.1328-1	91-58-7	2-Chloronaphthalene	ND	ug / L	1	1		12/04/0
X00460	XG.2000.1328-1	95-57-8	2-Chlorophenol	ND	ug / L	1	1		12/04/0
X00460	XG.2000.1328-1	91-57-6	2-Methylnaphthalene	ND	ug / L	1	1		12/04/0
X00460	XG.2000.1328-1	95-48-7	2-Methylphenol	ND	ug / L	1	1		12/04/0
X00460	XG.2000.1328-1	88-74-4	2-Nitroaniline	ND	ug / L	1	5		12/04/0
X00460	XG.2000.1328-1	88-75-5	2-Nitrophenol	ND	ug / L	1	5		12/04/0
X00460	XG.2000.1328-1		3+4 Methylphenol	ND	ug / L	1	1		12/04/0
X00460	XG.2000.1328-1	91-94-1	3,3-Dichlorobenzidine	ND	ug / L	1	10		12/04/0
X00460	XG.2000.1328-1	99-09-2	3-Nitroaniline	ND	ug / L	1	5		12/04/0
X00460	XG.2000.1328-1	534-52-1	4,6-Dinitro-2-methylphenol	ND	ug / L	1	10		12/04/0
X00460	XG.2000.1328-1	101-55-3	4-Bromophenyl-phenylether	ND	ug / L	1	1		12/04/0
X00460	XG.2000.1328-1	59-50-7	4-Chloro-3-methylphenol	ND	ug / L	1	5		12/04/0
X00460	XG.2000.1328-1	106-47-8	4-Chloroaniline	ND	ug / L	1	5		12/04/0
X00460	XG.2000.1328-1	7005-72-3	4-Chlorophenyl-phenylether	ND	ug / L	1	1		12/04/0
X00460	XG.2000.1328-1	100-01-6	4-Nitroaniline	ND	ug / L	1	5		12/04/0
X00460	XG.2000.1328-1	100-02-7	4-Nitrophenol	ND	ug / L	1	10		12/04/0
X00460	XG.2000.1328-1	83-32-9	Acenaphthene	ND	ug / L	1	1		12/0

Quality Control Summary

Explanation of codes	
D	*Not applicable due to sample dilution*
L	*Not applicable due to MDL proximity*

Client: CH2MHILL

Project: 0011269 160660 (TO.10) KAFB

X00460	XG.2000.1328-1	208-96-8	Acenaphthylene	ND	ug / L	1	1		12/04/00
X00460	XG.2000.1328-1	62-53-3	Aniline	ND	ug / L	1	10		12/04/00
X00460	XG.2000.1328-1	120-12-7	Anthracene	ND	ug / L	1	1		12/04/00
X00460	XG.2000.1328-1		Azobenzene&1,2-Diphenylhydrazine	ND	ug / L	1	1		12/04/00
X00460	XG.2000.1328-1	56-55-3	Benzo (a) anthracene	ND	ug / L	1	1		12/04/00
X00460	XG.2000.1328-1	50-32-8	Benzo(a)pyrene	ND	ug / L	1	1		12/04/00
X00460	XG.2000.1328-1		Benzo(b & k)fluoranthene	ND	ug / L	1	1		12/04/00
X00460	XG.2000.1328-1	191-24-2	Benzo(g,h,i)perylene	ND	ug / L	1	1		12/04/00
X00460	XG.2000.1328-1	64-85-0	Benzoic acid	ND	ug / L	1	25		12/04/00
X00460	XG.2000.1328-1	100-51-6	Benzyl alcohol	ND	ug / L	1	5		12/04/00
X00460	XG.2000.1328-1	111-44-4	bis (2-Chloroethyl) ether	ND	ug / L	1	1		12/04/00
X00460	XG.2000.1328-1	111-91-1	bis(2-Chloroethoxy)methane	ND	ug / L	1	1		12/04/00
X00460	XG.2000.1328-1	108-60-1	bis(2-Chloroisopropyl)ether	ND	ug / L	1	1		12/04/00
X00460	XG.2000.1328-1	117-81-7	bis(2-Ethylhexyl)phthalate	41	ug / L	1	5		12/04/00
X00460	XG.2000.1328-1	85-68-7	Butylbenzylphthalate	ND	ug / L	1	1		12/04/00
X00460	XG.2000.1328-1	218-01-9	Chrysene	ND	ug / L	1	1		12/04/00
X00460	XG.2000.1328-1	84-74-2	di-n-Butylphthalate	ND	ug / L	1	1		12/04/00
X00460	XG.2000.1328-1	117-84-0	di-n-Octylpthalate	2.4	ug / L	1	1		12/04/00
X00460	XG.2000.1328-1	53-70-3	Dibenz(a,h)anthracene	ND	ug / L	1	1		12/04/00
X00460	XG.2000.1328-1	132-64-9	Dibenzofuran	ND	ug / L	1	1		12/04/00
X00460	XG.2000.1328-1	84-66-2	Diethylphthalate	ND	ug / L	1	1		12/04/00
X00460	XG.2000.1328-1	131-11-3	Dimethylphthalate	ND	ug / L	1	1		12/04/00
X00460	XG.2000.1328-1	206-44-0	Fluoranthene	ND	ug / L	1	1		12/04/00
0	XG.2000.1328-1	86737	Fluorene	ND	ug / L	1	1		12/04/00
60	XG.2000.1328-1	118-74-1	Hexachlorobenzene	ND	ug / L	1	10		12/04/00
X00460	XG.2000.1328-1	87-68-3	Hexachlorobutadiene	ND	ug / L	1	10		12/04/00
X00460	XG.2000.1328-1	77-47-4	Hexachlorocyclopentadiene	ND	ug / L	1	10		12/04/00
X00460	XG.2000.1328-1	67-72-1	Hexachloroethane	ND	ug / L	1	5		12/04/00
X00460	XG.2000.1328-1	193-39-5	Indeno(1,2,3-cd)pyrene	ND	ug / L	1	1		12/04/00
X00460	XG.2000.1328-1	78-59-1	Isophorone	ND	ug / L	1	1		12/04/00
X00460	XG.2000.1328-1	621-64-7	n-Nitroso-di-n-propylamine	ND	ug / L	1	1		12/04/00
X00460	XG.2000.1328-1	62-75-9	n-Nitroso-dimethyl-amine	ND	ug / L	1	10		12/04/00
X00460	XG.2000.1328-1	86-30-6	n-Nitrosodiphenylamine	ND	ug / L	1	1		12/04/00
X00460	XG.2000.1328-1	91-20-3	Naphthalene	ND	ug / L	1	1		12/04/00
X00460	XG.2000.1328-1	98-95-3	Nitrobenzene	ND	ug / L	1	1		12/04/00
X00460	XG.2000.1328-1	87-86-5	Pentachlorophenol	ND	ug / L	1	10		12/04/00
X00460	XG.2000.1328-1	85-01-8	Phenanthrene	ND	ug / L	1	1		12/04/00
X00460	XG.2000.1328-1	108-95-2	Phenol	ND	ug / L	1	10		12/04/00
X00460	XG.2000.1328-1	129-00-0	Pyrene	ND	ug / L	1	1		12/04/00
X00460	XG.2000.1328-1	110-86-1	Pyridine	ND	ug / L	1	10		12/04/00

X00460-007 SW846 3510B/8270B SVOCs by GC/MS

X00460	XG.2000.1332-1	120-82-1	1,2,4-Trichlorobenzene	ND	ug / L	1	1		12/05/00
X00460	XG.2000.1332-1	95-50-1	1,2-Dichlorobenzene	ND	ug / L	1	1		12/05/00
X00460	XG.2000.1332-1	541-73-1	1,3-Dichlorobenzene	ND	ug / L	1	1		12/05/00
X00460	XG.2000.1332-1	106-46-7	1,4-Dichlorobenzene	ND	ug / L	1	1		12/05/00
X00460	XG.2000.1332-1	90-12-0	1-Methylnaphthalene	ND	ug / L	1	1		12/05/00
X00460	XG.2000.1332-1	58-90-2	2,3,4,6-Tetrachlorophenol	ND	ug / L	1	5		12/05/00
X00460	XG.2000.1332-1	95-95-4	2,4,5-Trichlorophenol	ND	ug / L	1	5		12/05/00
60	XG.2000.1332-1	88-06-2	2,4,6-Trichlorophenol	ND	ug / L	1	5		12/05/00
60	XG.2000.1332-1	120-83-2	2,4-Dichlorophenol	ND	ug / L	1	5		12/05/00

Quality Control Summary

Explanation of codes	
D	*Not applicable due to sample diluti*
L	*Not applicable due to MDL proximity*

Client: CH2MHILL

Project: 0011269 160660 (TO.10) KAFB

X00460	XG.2000.1332-1	105-67-9	2,4-Dimethylphenol	ND	ug / L	1	1		12/05/0
X00460	XG.2000.1332-1	51-28-5	2,4-Dinitrophenol	ND	ug / L	1	10		12/05/0
X00460	XG.2000.1332-1	121-14-2	2,4-Dinitrotoluene	ND	ug / L	1	5		12/05/0
X00460	XG.2000.1332-1	606-20-2	2,6-Dinitrotoluene	ND	ug / L	1	5		12/05/0
X00460	XG.2000.1332-1	91-58-7	2-Chloronaphthalene	ND	ug / L	1	1		12/05/0
X00460	XG.2000.1332-1	95-57-8	2-Chlorophenol	ND	ug / L	1	1		12/05/0
X00460	XG.2000.1332-1	91-57-6	2-Methylnaphthalene	ND	ug / L	1	1		12/05/0
X00460	XG.2000.1332-1	95-48-7	2-Methylphenol	ND	ug / L	1	1		12/05/0
X00460	XG.2000.1332-1	88-74-4	2-Nitroaniline	ND	ug / L	1	5		12/05/0
X00460	XG.2000.1332-1	88-75-5	2-Nitrophenol	ND	ug / L	1	5		12/05/0
X00460	XG.2000.1332-1		3+4 Methylphenol	ND	ug / L	1	1		12/05/0
X00460	XG.2000.1332-1	99-09-2	3-Nitroaniline	ND	ug / L	1	5		12/05/0
X00460	XG.2000.1332-1	534-52-1	4,6-Dinitro-2-methylphenol	ND	ug / L	1	10		12/05/0
X00460	XG.2000.1332-1	101-55-3	4-Bromophenyl-phenylether	ND	ug / L	1	1		12/05/0
X00460	XG.2000.1332-1	59-50-7	4-Chloro-3-methylphenol	ND	ug / L	1	5		12/05/0
X00460	XG.2000.1332-1	106-47-8	4-Chloroaniline	ND	ug / L	1	5		12/05/0
X00460	XG.2000.1332-1	7005-72-3	4-Chlorophenyl-phenylether	ND	ug / L	1	1		12/05/0
X00460	XG.2000.1332-1	100-01-6	4-Nitroaniline	ND	ug / L	1	5		12/05/0
X00460	XG.2000.1332-1	100-02-7	4-Nitrophenol	ND	ug / L	1	10		12/05/0
X00460	XG.2000.1332-1	83-32-9	Acenaphthene	ND	ug / L	1	1		12/05/0
X00460	XG.2000.1332-1	208-96-8	Acenaphthylene	ND	ug / L	1	1		12/05/0
X00460	XG.2000.1332-1	62-53-3	Aniline	ND	ug / L	1	10		12/05/0
X00460	XG.2000.1332-1	120-12-7	Anthracene	ND	ug / L	1	1		12/05/0
X00460	XG.2000.1332-1		Azobenzene&1,2-Diphenylhydrazine	ND	ug / L	1	1		12/05
X00460	XG.2000.1332-1	56-55-3	Benzo (a) anthracene	ND	ug / L	1	1		12/05/0
X00460	XG.2000.1332-1	50-32-8	Benzo(a)pyrene	ND	ug / L	1	1		12/05/0
X00460	XG.2000.1332-1		Benzo(b & k)fluoranthene	ND	ug / L	1	1		12/05/0
X00460	XG.2000.1332-1	191-24-2	Benzo(g,h,i)perylene	ND	ug / L	1	1		12/05/0
X00460	XG.2000.1332-1	64-85-0	Benzoic acid	ND	ug / L	1	25		12/05/0
X00460	XG.2000.1332-1	100-51-6	Benzyl alcohol	ND	ug / L	1	5		12/05/0
X00460	XG.2000.1332-1	111-44-4	bis (2-Chloroethyl) ether	ND	ug / L	1	1		12/05/0
X00460	XG.2000.1332-1	111-91-1	bis(2-Chloroethoxy)methane	ND	ug / L	1	1		12/05/0
X00460	XG.2000.1332-1	108-60-1	bis(2-Chloroisopropyl)ether	ND	ug / L	1	1		12/05/0
X00460	XG.2000.1332-1	117-81-7	bis(2-Ethylhexyl)phthalate	ND	ug / L	1	5		12/05/0
X00460	XG.2000.1332-1	85-68-7	Butylbenzylphthalate	ND	ug / L	1	1		12/05/0
X00460	XG.2000.1332-1	218-01-9	Chrysene	ND	ug / L	1	1		12/05/0
X00460	XG.2000.1332-1	84-74-2	di-n-Butylphthalate	ND	ug / L	1	1		12/05/0
X00460	XG.2000.1332-1	117-84-0	di-n-Octylpthalate	ND	ug / L	1	1		12/05/0
X00460	XG.2000.1332-1	53-70-3	Dibenz(a,h)anthracene	ND	ug / L	1	1		12/05/0
X00460	XG.2000.1332-1	132-64-9	Dibenzofuran	ND	ug / L	1	1		12/05/0
X00460	XG.2000.1332-1	84-66-2	Diethylphthalate	ND	ug / L	1	1		12/05/0
X00460	XG.2000.1332-1	131-11-3	Dimethylphthalate	ND	ug / L	1	1		12/05/0
X00460	XG.2000.1332-1	206-44-0	Fluoranthene	ND	ug / L	1	1		12/05/0
X00460	XG.2000.1332-1	86737	Fluorene	ND	ug / L	1	1		12/05/0
X00460	XG.2000.1332-1	118-74-1	Hexachlorobenzene	ND	ug / L	1	10		12/05/0
X00460	XG.2000.1332-1	87-68-3	Hexachlorobutadiene	ND	ug / L	1	10		12/05/0
X00460	XG.2000.1332-1	77-47-4	Hexachlorocyclopentadiene	ND	ug / L	1	10		12/05/0
X00460	XG.2000.1332-1	67-72-1	Hexachloroethane	ND	ug / L	1	5		12/05/0
X00460	XG.2000.1332-1	193-39-5	Indeno(1,2,3-cd)pyrene	ND	ug / L	1	1		12/05/0
X00460	XG.2000.1332-1	78-59-1	Isophorone	ND	ug / L	1	1		12/05
X00460	XG.2000.1332-1	621-64-7	n-Nitroso-di-n-propylamine	ND	ug / L	1	1		12/05/0

Quality Control Summary

Explanation of codes	
D	*Not applicable due to sample dilution*
L	*Not applicable due to MDL proximity*

nt: CH2MHILL

Project: 0011269 160660 (TO.10) KAFB

X00460	XG.2000.1332-1	62-75-9	n-Nitroso-dimethyl-amine	ND	ug / L	1	10		12/05/00
X00460	XG.2000.1332-1	86-30-6	n-Nitrosodiphenylamine	ND	ug / L	1	1		12/05/00
X00460	XG.2000.1332-1	91-20-3	Naphthalene	ND	ug / L	1	1		12/05/00
X00460	XG.2000.1332-1	98-95-3	Nitrobenzene	ND	ug / L	1	1		12/05/00
X00460	XG.2000.1332-1	87-86-5	Pentachlorophenol	ND	ug / L	1	10		12/05/00
X00460	XG.2000.1332-1	85-01-8	Phenanthrene	ND	ug / L	1	1		12/05/00
X00460	XG.2000.1332-1	108-95-2	Phenol	ND	ug / L	1	10		12/05/00
X00460	XG.2000.1332-1	129-00-0	Pyrene	ND	ug / L	1	1		12/05/00
X00460	XG.2000.1332-1	110-86-1	Pyridine	ND	ug / L	1	10		12/05/00

X00460-009 **SW846 3510B/8270B SVOCs by GC/MS**

X00460	XG.2000.1369-12	120-82-1	1,2,4-Trichlorobenzene	ND	ug / L	1	1		12/14/00
X00460	XG.2000.1369-12	95-50-1	1,2-Dichlorobenzene	ND	ug / L	1	1		12/14/00
X00460	XG.2000.1369-12	541-73-1	1,3-Dichlorobenzene	ND	ug / L	1	1		12/14/00
X00460	XG.2000.1369-12	106-46-7	1,4-Dichlorobenzene	ND	ug / L	1	1		12/14/00
X00460	XG.2000.1369-12	90-12-0	1-Methylnaphthalene	ND	ug / L	1	1		12/14/00
X00460	XG.2000.1369-12	58-90-2	2,3,4,6-Tetrachlorophenol	ND	ug / L	1	5		12/14/00
X00460	XG.2000.1369-12	95-95-4	2,4,5-Trichlorophenol	ND	ug / L	1	5		12/14/00
X00460	XG.2000.1369-12	88-06-2	2,4,6-Trichlorophenol	ND	ug / L	1	5		12/14/00
X00460	XG.2000.1369-12	120-83-2	2,4-Dichlorophenol	ND	ug / L	1	5		12/14/00
X00460	XG.2000.1369-12	105-67-9	2,4-Dimethylphenol	ND	ug / L	1	1		12/14/00
X00460	XG.2000.1369-12	51-28-5	2,4-Dinitrophenol	ND	ug / L	1	10		12/14/00
X00460	XG.2000.1369-12	121-14-2	2,4-Dinitrotoluene	ND	ug / L	1	5		12/14/00
X00460	XG.2000.1369-12	606-20-2	2,6-Dinitrotoluene	ND	ug / L	1	5		12/14/00
X00460	XG.2000.1369-12	91-58-7	2-Chloronaphthalene	ND	ug / L	1	1		12/14/00
X00460	XG.2000.1369-12	95-57-8	2-Chlorophenol	ND	ug / L	1	1		12/14/00
X00460	XG.2000.1369-12	91-57-6	2-Methylnaphthalene	ND	ug / L	1	1		12/14/00
X00460	XG.2000.1369-12	95-48-7	2-Methylphenol	ND	ug / L	1	1		12/14/00
X00460	XG.2000.1369-12	88-74-4	2-Nitroaniline	ND	ug / L	1	5		12/14/00
X00460	XG.2000.1369-12	88-75-5	2-Nitrophenol	ND	ug / L	1	5		12/14/00
X00460	XG.2000.1369-12		3+4 Methylphenol	ND	ug / L	1	1		12/14/00
X00460	XG.2000.1369-12	91-94-1	3,3-Dichlorobenzidine	ND	ug / L	1	10		12/14/00
X00460	XG.2000.1369-12	99-09-2	3-Nitroaniline	ND	ug / L	1	5		12/14/00
X00460	XG.2000.1369-12	534-52-1	4,6-Dinitro-2-methylphenol	ND	ug / L	1	10		12/14/00
X00460	XG.2000.1369-12	101-55-3	4-Bromophenyl-phenylether	ND	ug / L	1	1		12/14/00
X00460	XG.2000.1369-12	59-50-7	4-Chloro-3-methylphenol	ND	ug / L	1	5		12/14/00
X00460	XG.2000.1369-12	106-47-8	4-Chloroaniline	ND	ug / L	1	5		12/14/00
X00460	XG.2000.1369-12	7005-72-3	4-Chlorophenyl-phenylether	ND	ug / L	1	1		12/14/00
X00460	XG.2000.1369-12	100-01-6	4-Nitroaniline	ND	ug / L	1	5		12/14/00
X00460	XG.2000.1369-12	100-02-7	4-Nitrophenol	ND	ug / L	1	10		12/14/00
X00460	XG.2000.1369-12	83-32-9	Acenaphthene	ND	ug / L	1	1		12/14/00
X00460	XG.2000.1369-12	208-96-8	Acenaphthylene	ND	ug / L	1	1		12/14/00
X00460	XG.2000.1369-12	62-53-3	Aniline	ND	ug / L	1	10		12/14/00
X00460	XG.2000.1369-12	120-12-7	Anthracene	ND	ug / L	1	1		12/14/00
X00460	XG.2000.1369-12		Azobenzene&1,2-Diphenylhydrazine	ND	ug / L	1	1		12/14/00
X00460	XG.2000.1369-12	56-55-3	Benzo (a) anthracene	ND	ug / L	1	1		12/14/00
X00460	XG.2000.1369-12	50-32-8	Benzo(a)pyrene	ND	ug / L	1	1		12/14/00
X00460	XG.2000.1369-12		Benzo(b & k)fluoranthene	ND	ug / L	1	1		12/14/00
X00460	XG.2000.1369-12	191-24-2	Benzo(g,h,i)perylene	ND	ug / L	1	1		12/14/00
X00460	XG.2000.1369-12	64-85-0	Benzoic acid	ND	ug / L	1	25		12/14/00
X00460	XG.2000.1369-12	100-51-6	Benzyl alcohol	ND	ug / L	1	5		12/14/00

Quality Control Summary

Client: CH2MHILL

Project: 0011269 160660 (TO.10) KAFB

Explanation of codes	
D	*Not applicable due to sample diluti*
L	*Not applicable due to MDL proximi*

X00460	XG.2000.1369-12	111-44-4	bis (2-Chloroethyl) ether	ND	ug / L	1	1		12/14/00
X00460	XG.2000.1369-12	111-91-1	bis(2-Chloroethoxy)methane	ND	ug / L	1	1		12/14/00
X00460	XG.2000.1369-12	108-60-1	bis(2-Chloroisopropyl)ether	ND	ug / L	1	1		12/14/00
X00460	XG.2000.1369-12	117-81-7	bis(2-Ethylhexyl)phthalate	ND	ug / L	1	5		12/14/00
X00460	XG.2000.1369-12	85-68-7	Butylbenzylphthalate	ND	ug / L	1	1		12/14/00
X00460	XG.2000.1369-12	218-01-9	Chrysene	ND	ug / L	1	1		12/14/00
X00460	XG.2000.1369-12	84-74-2	di-n-Butylphthalate	ND	ug / L	1	1		12/14/00
X00460	XG.2000.1369-12	117-84-0	di-n-Octylpthalate	ND	ug / L	1	1		12/14/00
X00460	XG.2000.1369-12	53-70-3	Dibenz(a,h)anthracene	ND	ug / L	1	1		12/14/00
X00460	XG.2000.1369-12	132-64-9	Dibenzofuran	ND	ug / L	1	1		12/14/00
X00460	XG.2000.1369-12	84-66-2	Diethylphthalate	ND	ug / L	1	1		12/14/00
X00460	XG.2000.1369-12	131-11-3	Dimethylphthalate	ND	ug / L	1	1		12/14/00
X00460	XG.2000.1369-12	206-44-0	Fluoranthene	ND	ug / L	1	1		12/14/00
X00460	XG.2000.1369-12	86737	Fluorene	ND	ug / L	1	1		12/14/00
X00460	XG.2000.1369-12	118-74-1	Hexachlorobenzene	ND	ug / L	1	10		12/14/00
X00460	XG.2000.1369-12	87-68-3	Hexachlorobutadiene	ND	ug / L	1	10		12/14/00
X00460	XG.2000.1369-12	77-47-4	Hexachlorocyclopentadiene	ND	ug / L	1	10		12/14/00
X00460	XG.2000.1369-12	67-72-1	Hexachloroethane	ND	ug / L	1	5		12/14/00
X00460	XG.2000.1369-12	193-39-5	Indeno(1,2,3-cd)pyrene	ND	ug / L	1	1		12/14/00
X00460	XG.2000.1369-12	78-59-1	Isophorone	ND	ug / L	1	1		12/14/00
X00460	XG.2000.1369-12	621-64-7	n-Nitroso-di-n-propylamine	ND	ug / L	1	1		12/14/00
X00460	XG.2000.1369-12	62-75-9	n-Nitroso-dimethyl-amine	ND	ug / L	1	10		12/14/00
X00460	XG.2000.1369-12	86-30-6	n-Nitrosodiphenylamine	ND	ug / L	1	1		12/14/00
X00460	XG.2000.1369-12	91-20-3	Naphthalene	ND	ug / L	1	1		12/14
X00460	XG.2000.1369-12	98-95-3	Nitrobenzene	ND	ug / L	1	1		12/14
X00460	XG.2000.1369-12	87-86-5	Pentachlorophenol	ND	ug / L	1	10		12/14/00
X00460	XG.2000.1369-12	85-01-8	Phenanthrene	ND	ug / L	1	1		12/14/00
X00460	XG.2000.1369-12	108-95-2	Phenol	ND	ug / L	1	10		12/14/00
X00460	XG.2000.1369-12	129-00-0	Pyrene	ND	ug / L	1	1		12/14/00
X00460	XG.2000.1369-12	110-86-1	Pyridine	ND	ug / L	1	10		12/14/00

QC Type **MS: Matrix Spike** QC Matrix **WATER**

QC Group	Run Sequence	CAS #	Analyte	Result	Units	Dilution Factor	Detection Limit	Code	Run Date
X00444-007		**SW846 ME/8015A Diesel Range Organics by GC/FID**							
X00444	XG.2000.1288-7		Diesel Range Organics	88	% Recovery	1	NA		11/17/00
X00445-005		**SW846 5030A/8015A GRO by GC/FID**							
X00445	XG.2000.1286-8		Gasoline Range Organics	106	% Recovery	1	NA		11/18/00
X00447-009		**SW846 8260A Purgeable VOCs by GC/MS**							
X00447	XG.2000.1301-8	75-34-3	1,1 Dichloroethene	105	% Recovery	1	NA		11/21/00
X00447	XG.2000.1301-8	106-46-7	1,4 Dichlorobenzene	109	% Recovery	1	NA		11/21/00
X00447	XG.2000.1301-8	71-43-2	Benzene	112	% Recovery	1	NA		11/21/00
X00447	XG.2000.1301-8	108-90-7	Chlorobenzene	111	% Recovery	1	NA		11/21/00
X00447	XG.2000.1301-8	108-88-3	Toluene	113	% Recovery	1	NA		11/21/00
X00447	XG.2000.1301-8	79-01-6	Trichloroethene	111	% Recovery	1	NA		11/21/00

Quality Control Summary

Explanation of codes	
D	*Not applicable due to sample dilution*
L	*Not applicable due to MDL proximity*

t: CH2MHILL

Project: 0011269 160660 (TO.10) KAFB

X00460-005 **SW846 3510B/8270B SVOCs by GC/MS**

X00460	XG.2000.1328-5	120-82-1	1,2,4-Trichlorobenzene	74	% Recovery	2	NA		12/04/00
X00460	XG.2000.1328-5	106-46-7	1,4-Dichlorobenzene	75	% Recovery	2	NA		12/04/00
X00460	XG.2000.1328-5	121-14-2	2,4-Dinitrotoluene	90	% Recovery	2	NA		12/04/00
X00460	XG.2000.1328-5	95-57-8	2-Chlorophenol	78	% Recovery	2	NA		12/04/00
X00460	XG.2000.1328-5	59-50-7	4-Chloro-3-methylphenol	84	% Recovery	2	NA		12/04/00
X00460	XG.2000.1328-5	100-02-7	4-Nitrophenol	43	% Recovery	2	NA		12/04/00
X00460	XG.2000.1328-5	83-32-9	Acenaphthene	89	% Recovery	2	NA		12/04/00
X00460	XG.2000.1328-5	117-84-0	di-n-Octylpthalate	107	% Recovery	2	NA		12/04/00
X00460	XG.2000.1328-5	621-64-7	n-Nitroso-di-n-propylamine	94	% Recovery	2	NA		12/04/00
X00460	XG.2000.1328-5	87-86-5	Pentachlorophenol	92	% Recovery	2	NA		12/04/00
X00460	XG.2000.1328-5	108-95-2	Phenol	38	% Recovery	2	NA		12/04/00
X00460	XG.2000.1328-5	129-00-0	Pyrene	95	% Recovery	2	NA		12/04/00

QC Type **MSD: Matrix Spike Duplicate Accuracy** QC Matrix **WATER**

QC Group	Run Sequence	CAS #	Analyte	Result	Units	Dilution Factor	Detection Limit	Code	Run Date
X00444-008		**SW846 ME/8015A Diesel Range Organics by GC/FID**							
X00444	XG.2000.1288-8		Diesel Range Organics	88	% Recovery	1	NA		11/17/00
5-006		**SW846 5030A/8015A GRO by GC/FID**							
X00445	XG.2000.1286-9		Gasoline Range Organics	99	% Recovery	1	NA		11/18/00
X00447-010		**SW846 8260A Purgeable VOCs by GC/MS**							
X00447	XG.2000.1301-9	75-34-3	1,1 Dichloroethene	103	% Recovery	1	NA		11/21/00
X00447	XG.2000.1301-9	106-46-7	1,4 Dichlorobenzene	110	% Recovery	1	NA		11/21/00
X00447	XG.2000.1301-9	71-43-2	Benzene	110	% Recovery	1	NA		11/21/00
X00447	XG.2000.1301-9	108-90-7	Chlorobenzene	109	% Recovery	1	NA		11/21/00
X00447	XG.2000.1301-9	108-88-3	Toluene	110	% Recovery	1	NA		11/21/00
X00447	XG.2000.1301-9	79-01-6	Trichloroethene	108	% Recovery	1	NA		11/21/00
X00460-006		**SW846 3510B/8270B SVOCs by GC/MS**							
X00460	XG.2000.1328-6	120-82-1	1,2,4-Trichlorobenzene	72	% Recovery	1	NA		12/04/00
X00460	XG.2000.1328-6	106-46-7	1,4-Dichlorobenzene	74	% Recovery	1	NA		12/04/00
X00460	XG.2000.1328-6	121-14-2	2,4-Dinitrotoluene	90	% Recovery	1	NA		12/04/00
X00460	XG.2000.1328-6	95-57-8	2-Chlorophenol	73	% Recovery	1	NA		12/04/00
X00460	XG.2000.1328-6	59-50-7	4-Chloro-3-methylphenol	78	% Recovery	1	NA		12/04/00
X00460	XG.2000.1328-6	100-02-7	4-Nitrophenol	41	% Recovery	1	NA		12/04/00
X00460	XG.2000.1328-6	83-32-9	Acenaphthene	88	% Recovery	1	NA		12/04/00
X00460	XG.2000.1328-6	117-84-0	di-n-Octylpthalate	106	% Recovery	1	NA		12/04/00
X00460	XG.2000.1328-6	621-64-7	n-Nitroso-di-n-propylamine	94	% Recovery	1	NA		12/04/00
X00460	XG.2000.1328-6	87-86-5	Pentachlorophenol	96	% Recovery	1	NA		12/04/00
X00460	XG.2000.1328-6	108-95-2	Phenol	36	% Recovery	1	NA		12/04/00
X00460	XG.2000.1328-6	129-00-0	Pyrene	94	% Recovery	1	NA		12/04/00

Quality Control Summary

Client: CH2MHILL

Project: 0011269 160660 (TO.10) KAFB

Explanation of codes	
D	*Not applicable due to sample diluti*
L	*Not applicable due to MDL proxim*

QC Type: **MSD: Matrix Spike Duplicate Precision** QC Matrix: **WATER**

QC Group	Run Sequence	CAS #	Analyte	Result	Units	Dilution Factor	Detection Limit	Code	Run Date
X00444-008		**SW846 ME/8015A Diesel Range Organics by GC/FID**							
X00444	XG.2000.1288-8		Diesel Range Organics	< 1	RPD	1	NA		11/17/C0
X00445-006		**SW846 5030A/8015A GRO by GC/FID**							
X00445	XG.2000.1286-9		Gasoline Range Organics	7	RPD	1	NA		11/18/C0
X00447-010		**SW846 8260A Purgeable VOCs by GC/MS**							
X00447	XG.2000.1301-9	75-34-3	1,1 Dichloroethene	2	RPD	1	NA		11/21/C0
X00447	XG.2000.1301-9	106-46-7	1,4 Dichlorobenzene	< 1	RPD	1	NA		11/21/C0
X00447	XG.2000.1301-9	71-43-2	Benzene	2	RPD	1	NA		11/21/C0
X00447	XG.2000.1301-9	108-90-7	Chlorobenzene	2	RPD	1	NA		11/21/C0
X00447	XG.2000.1301-9	108-88-3	Toluene	2	RPD	1	NA		11/21/C0
X00447	XG.2000.1301-9	79-01-6	Trichloroethene	3	RPD	1	NA		11/21/C0
X00460-006		**SW846 3510B/8270B SVOCs by GC/MS**							
X00460	XG.2000.1328-6	120-82-1	1,2,4-Trichlorobenzene	2	RPD	1	NA		12/04/C0
X00460	XG.2000.1328-6	106-46-7	1,4-Dichlorobenzene	2	RPD	1	NA		12/04/C0
X00460	XG.2000.1328-6	121-14-2	2,4-Dinitrotoluene	1	RPD	1	NA		12/04/C0
X00460	XG.2000.1328-6	95-57-8	2-Chlorophenol	6	RPD	1	NA		12/04/
X00460	XG.2000.1328-6	59-50-7	4-Chloro-3-methylphenol	7	RPD	1	NA		12/0
X00460	XG.2000.1328-6	100-02-7	4-Nitrophenol	3	RPD	1	NA		12/04/C0
X00460	XG.2000.1328-6	83-32-9	Acenaphthene	< 1	RPD	1	NA		12/04/C0
X00460	XG.2000.1328-6	117-84-0	di-n-Octylpthalate	1	RPD	1	NA		12/04/C0
X00460	XG.2000.1328-6	621-64-7	n-Nitroso-di-n-propylamine	< 1	RPD	1	NA		12/04/C0
X00460	XG.2000.1328-6	87-86-5	Pentachlorophenol	4	RPD	1	NA		12/04/C0
X00460	XG.2000.1328-6	108-95-2	Phenol	6	RPD	1	NA		12/04/C0
X00460	XG.2000.1328-6	129-00-0	Pyrene	1	RPD	1	NA		12/04/C0

Surrogate Summary: QC

Client: CH2MHILL

Project: 0011269 160660 (TO.10) KAFB

QC Type: **LCS** QC Matrix: **SOLID**

QC Group	Run Sequence	CAS #	Analyte	Result	Units	Dilution Factor	Detection Limit	Code	Run Date
X00448-002		BTEXALL							
X00448	XG.2000.1303-8	NA	4-Bromofluorobenzene	97	% Recovery	1	NA		11/21/00
X00448	XG.2000.1303-8	NA	aaa-Trifluorotoluene	98	% Recovery	1	NA		11/21/00
X00448	XG.2000.1303-8	NA	Bromochloromethane	120	% Recovery	1	NA		11/21/00
X00448	XG.2000.1303-8	NA	Bromochloropropane	48	% Recovery	1	NA		11/21/00
X00448	XG.2000.1303-8	NA	Dichlorobutane	64	% Recovery	1	NA		11/21/00
X00454-003		8260							
X00454	XG.2000.1313-3	NA	1,2 Dichloroethane-D4 (SS)	80	% Recovery	1	NA		11/29/00
X00454	XG.2000.1313-3	NA	4-Bromofluorobenzene (SS)	94	% Recovery	1	NA		11/29/00
X00454	XG.2000.1313-3	NA	Dibromofluoromethane (SS)	98	% Recovery	1	NA		11/29/00
X00454	XG.2000.1313-3	NA	Toluene-D8 (SS)	100	% Recovery	1	NA		11/29/00
X00457-002		GRO							
X00457	XG.2000.1317-2	NA	4-Bromofluorobenzene-FID	96	% Recovery	1	NA		12/01/00
X00457	XG.2000.1317-2	NA	4-Bromofluorobenzene-PID	ND	% Recovery	1	NA		12/01/00
X00457	XG.2000.1317-2	NA	aaa-Trifluorotoluene-FID	105	% Recovery	1	NA		12/01/00
X00457	XG.2000.1317-2	NA	aaa-Trifluorotoluene-PID	146	% Recovery	1	NA		12/01/00
X00459-002		DRO							
X00459	XG.2000.1315-4	NA	O-terphenyl	106	% Recovery	1	NA		12/01/00
X00469-003		8260							
X00469	XG.2000.1359-3	NA	1,2 Dichloroethane-D4 (SS)	84	% Recovery	1	NA		12/07/00
X00469	XG.2000.1359-3	NA	4-Bromofluorobenzene (SS)	98	% Recovery	1	NA		12/07/00
X00469	XG.2000.1359-3	NA	Dibromofluoromethane (SS)	98	% Recovery	1	NA		12/07/00
X00469	XG.2000.1359-3	NA	Toluene-D8 (SS)	102	% Recovery	1	NA		12/07/00

QC Type: **LCSD** QC Matrix: **SOLID**

QC Group	Run Sequence	CAS #	Analyte	Result	Units	Dilution Factor	Detection Limit	Code	Run Date
X00448-003		BTEXALL							
X00448	XG.2000.1303-9	NA	4-Bromofluorobenzene	99	% Recovery	1	NA		11/21/00
X00448	XG.2000.1303-9	NA	aaa-Trifluorotoluene	98	% Recovery	1	NA		11/21/00
X00448	XG.2000.1303-9	NA	Bromochloromethane	58	% Recovery	1	NA		11/21/00
X00448	XG.2000.1303-9	NA	Bromochloropropane	41	% Recovery	1	NA		11/21/00
X00448	XG.2000.1303-9	NA	Dichlorobutane	123	% Recovery	1	NA		11/21/00
X00454-004		8260							
X00454	XG.2000.1313-4	NA	1,2 Dichloroethane-D4 (SS)	85	% Recovery	1	NA		11/29/00
X00454	XG.2000.1313-4	NA	4-Bromofluorobenzene (SS)	97	% Recovery	1	NA		11/29/00
X00454	XG.2000.1313-4	NA	Dibromofluoromethane (SS)	98	% Recovery	1	NA		11/29/00
X00454	XG.2000.1313-4	NA	Toluene-D8 (SS)	100	% Recovery	1	NA		11/29/00

Surrogate Summary: QC

Client: CH2MHILL

Project: 0011269 160660 (TO.10) KAFB

X00457-003		GRO						
X00457	XG.2000.1317-3	NA	4-Bromofluorobenzene-FID	97	% Recovery	1	NA	12/01/00
X00457	XG.2000.1317-3	NA	4-Bromofluorobenzene-PID	212	% Recovery	1	NA	12/01/00
X00457	XG.2000.1317-3	NA	aaa-Trifluorotoluene-FID	105	% Recovery	1	NA	12/01/00
X00457	XG.2000.1317-3	NA	aaa-Trifluorotoluene-PID	174	% Recovery	1	NA	12/01/00
X00459-003		DRO						
X00459	XG.2000.1315-5	NA	O-terphenyl	100	% Recovery	1	NA	12/01/00
X00469-004		8260						
X00469	XG.2000.1359-4	NA	1,2 Dichloroethane-D4 (SS)	88	% Recovery	1	NA	12/07/00
X00469	XG.2000.1359-4	NA	4-Bromofluorobenzene (SS)	98	% Recovery	1	NA	12/07/00
X00469	XG.2000.1359-4	NA	Dibromofluoromethane (SS)	99	% Recovery	1	NA	12/07/00
X00469	XG.2000.1359-4	NA	Toluene-D8 (SS)	99	% Recovery	1	NA	12/07/00

QC Type **MB** QC Matrix **SOLID**

QC Group	Run Sequence	CAS #	Analyte	Result	Units	Dilution Factor	Detection Limit	Code	Run Date
X00448-001		BTEXALL							
X00448	XG.2000.1303-7	NA	4-Bromofluorobenzene	98	% Recovery	1	NA		11/21/00
X00448	XG.2000.1303-7	NA	aaa-Trifluorotoluene	98	% Recovery	1	NA		11/21/00
X00448	XG.2000.1303-7	NA	Bromochloromethane	14	% Recovery	1	NA		11/21
X00448	XG.2000.1303-7	NA	Bromochloropropane	59	% Recovery	1	NA		11/21/00
X00448	XG.2000.1303-7	NA	Dichlorobutane	12	% Recovery	1	NA		11/21/00
X00448-008		BTEXALL							
X00448	XG.2000.1308-4	NA	4-Bromofluorobenzene	96	% Recovery	1	NA		11/28/00
X00448	XG.2000.1308-4	NA	aaa-Trifluorotoluene	100	% Recovery	1	NA		11/28/00
X00448	XG.2000.1308-4	NA	Bromochloromethane	177	% Recovery	1	NA		11/28/00
X00448	XG.2000.1308-4	NA	Bromochloropropane	142	% Recovery	1	NA		11/28/00
X00448	XG.2000.1308-4	NA	Dichlorobutane	117	% Recovery	1	NA		11/28/00
X00448-010		BTEXALL							
X00448	XG.2000.1312-1	NA	4-Bromofluorobenzene	96	% Recovery	1	NA		11/30/00
X00448	XG.2000.1312-1	NA	aaa-Trifluorotoluene	99	% Recovery	1	NA		11/30/00
X00448	XG.2000.1312-1	NA	Bromochloromethane	204	% Recovery	1	NA		11/30/00
X00448	XG.2000.1312-1	NA	Bromochloropropane	47	% Recovery	1	NA		11/30/00
X00448	XG.2000.1312-1	NA	Dichlorobutane	54	% Recovery	1	NA		11/30/00
X00448-013		BTEXALL							
X00448	XG.2000.1320-1	NA	4-Bromofluorobenzene	96	% Recovery	1	NA		12/01/00
X00448	XG.2000.1320-1	NA	aaa-Trifluorotoluene	95	% Recovery	1	NA		12/01/00
X00448	XG.2000.1320-1	NA	Bromochloromethane	37	% Recovery	1	NA		12/01/00
X00448	XG.2000.1320-1	NA	Bromochloropropane	78	% Recovery	1	NA		12/01/00
X00448	XG.2000.1320-1	NA	Dichlorobutane	35	% Recovery	1	NA		12/01/00
X00448-016		BTEXALL							
X00448	XG.2000.1337-3	NA	4-Bromofluorobenzene	97	% Recovery	1	NA		12/07/00
X00448	XG.2000.1337-3	NA	aaa-Trifluorotoluene	100	% Recovery	1	NA		12/07
X00448	XG.2000.1337-3	NA	Bromochloromethane	44	% Recovery	1	NA		12/07

Surrogate Summary: QC

Client: CH2MHILL

Project: 0011269 160660 (TO.10) KAFB

X00448	XG.2000.1337-3	NA	Bromochloropropane	131	% Recovery	1	NA	12/07/00
X00448	XG.2000.1337-3	NA	Dichlorobutane	140	% Recovery	1	NA	12/07/00
X00448-023		BTEXALL						
X00448	XG.2000.1378-1	NA	4-Bromofluorobenzene	102	% Recovery	1	NA	12/18/00
X00448	XG.2000.1378-1	NA	aaa-Trifluorotoluene	105	% Recovery	1	NA	12/18/00
X00448	XG.2000.1378-1	NA	Bromochloromethane	69	% Recovery	1	NA	12/18/00
X00448	XG.2000.1378-1	NA	Bromochloropropane	53	% Recovery	1	NA	12/18/00
X00448	XG.2000.1378-1	NA	Dichlorobutane	30	% Recovery	1	NA	12/18/00
X00454-001		8260						
X00454	XG.2000.1313-1	NA	1,2 Dichloroethane-D4 (SS)	86	% Recovery	1	NA	11/29/00
X00454	XG.2000.1313-1	NA	4-Bromofluorobenzene (SS)	98	% Recovery	1	NA	11/29/00
X00454	XG.2000.1313-1	NA	Dibromofluoromethane (SS)	98	% Recovery	1	NA	11/29/00
X00454	XG.2000.1313-1	NA	Toluene-D8 (SS)	102	% Recovery	1	NA	11/29/00
X00454-010		8260						
X00454	XG.2000.1313-10	NA	1,2 Dichloroethane-D4 (SS)	95	% Recovery	1	NA	11/30/00
X00454	XG.2000.1313-10	NA	4-Bromofluorobenzene (SS)	102	% Recovery	1	NA	11/30/00
X00454	XG.2000.1313-10	NA	Dibromofluoromethane (SS)	99	% Recovery	1	NA	11/30/00
X00454	XG.2000.1313-10	NA	Toluene-D8 (SS)	101	% Recovery	1	NA	11/30/00
X00454-018		8260						
X00454	XG.2000.1325-8	NA	1,2 Dichloroethane-D4 (SS)	85	% Recovery	1	NA	12/01/00
X00454	XG.2000.1326-1	NA	1,2 Dichloroethane-D4 (SS)	85	% Recovery	1	NA	12/01/00
[illegible]4	XG.2000.1325-8	NA	4-Bromofluorobenzene (SS)	95	% Recovery	1	NA	12/01/00
[illegible]54	XG.2000.1326-1	NA	4-Bromofluorobenzene (SS)	95	% Recovery	1	NA	12/01/00
X00454	XG.2000.1325-8	NA	Dibromofluoromethane (SS)	99	% Recovery	1	NA	12/01/00
X00454	XG.2000.1326-1	NA	Dibromofluoromethane (SS)	99	% Recovery	1	NA	12/01/00
X00454	XG.2000.1325-8	NA	Toluene-D8 (SS)	102	% Recovery	1	NA	12/01/00
X00454	XG.2000.1326-1	NA	Toluene-D8 (SS)	102	% Recovery	1	NA	12/01/00
X00454-028		8260						
X00454	XG.2000.1350-1	NA	1,2 Dichloroethane-D4 (SS)	96	% Recovery	1	NA	12/07/00
X00454	XG.2000.1350-1	NA	4-Bromofluorobenzene (SS)	100	% Recovery	1	NA	12/07/00
X00454	XG.2000.1350-1	NA	Dibromofluoromethane (SS)	101	% Recovery	1	NA	12/07/00
X00454	XG.2000.1350-1	NA	Toluene-D8 (SS)	101	% Recovery	1	NA	12/07/00
X00457-001		GRO						
X00457	XG.2000.1317-1	NA	4-Bromofluorobenzene-FID	85	% Recovery	1	NA	12/01/00
X00457	XG.2000.1317-1	NA	4-Bromofluorobenzene-PID	ND	% Recovery	1	NA	12/01/00
X00457	XG.2000.1317-1	NA	aaa-Trifluorotoluene-FID	102	% Recovery	1	NA	12/01/00
X00457	XG.2000.1317-1	NA	aaa-Trifluorotoluene-PID	ND	% Recovery	1	NA	12/01/00
X00457-014		GRO						
X00457	XG.2000.1366-1	NA	4-Bromofluorobenzene-FID	89	% Recovery	1	NA	12/13/00
X00457	XG.2000.1366-1	NA	4-Bromofluorobenzene-PID	ND	% Recovery	1	NA	12/13/00
X00457	XG.2000.1366-1	NA	aaa-Trifluorotoluene-FID	99	% Recovery	1	NA	12/13/00
X00457	XG.2000.1366-1	NA	aaa-Trifluorotoluene-PID	ND	% Recovery	1	NA	12/13/00
X00459-001		DRO						
X00459	XG.2000.1315-3	NA	O-terphenyl	99	% Recovery	1	NA	12/01/00
[illegible]59-009		DRO						
[illegible]59	XG.2000.1354-3	NA	O-terphenyl	88	% Recovery	1	NA	12/12/00

Surrogate Summary: QC

Client: CH2MHILL

Project: 0011269 160660 (TO.10) KAFB

X00459-014		DRO							
X00459	XG.2000.1376-1	NA	O-terphenyl	91	% Recovery	1	NA		12/13/00
X00459-017		DRO							
X00459	XG.2000.1376-2	NA	O-terphenyl	93	% Recovery	1	NA		12/14/00
X00459-019		DRO							
X00459	XG.2000.1385-1	NA	O-terphenyl	95	% Recovery	1	NA		12/18/00
X00469-001		8260							
X00469	XG.2000.1359-1	NA	1,2 Dichloroethane-D4 (SS)	96	% Recovery	1	NA		12/07/00
X00469	XG.2000.1359-1	NA	4-Bromofluorobenzene (SS)	100	% Recovery	1	NA		12/07/00
X00469	XG.2000.1359-1	NA	Dibromofluoromethane (SS)	101	% Recovery	1	NA		12/07/00
X00469	XG.2000.1359-1	NA	Toluene-D8 (SS)	101	% Recovery	1	NA		12/07/00
X00469-005		8260							
X00469	XG.2000.1359-5	NA	1,2 Dichloroethane-D4 (SS)	91	% Recovery	1	NA		12/11/00
X00469	XG.2000.1359-5	NA	4-Bromofluorobenzene (SS)	97	% Recovery	1	NA		12/11/00
X00469	XG.2000.1359-5	NA	Dibromofluoromethane (SS)	102	% Recovery	1	NA		12/11/00
X00469	XG.2000.1359-5	NA	Toluene-D8 (SS)	100	% Recovery	1	NA		12/11/00
X00469-015		8260							
X00469	XG.2000.1359-15	NA	1,2 Dichloroethane-D4 (SS)	97	% Recovery	1	NA		12/12/00
X00469	XG.2000.1359-15	NA	4-Bromofluorobenzene (SS)	99	% Recovery	1	NA		12/12/00
X00469	XG.2000.1359-15	NA	Dibromofluoromethane (SS)	100	% Recovery	1	NA		12/12/00
X00469	XG.2000.1359-15	NA	Toluene-D8 (SS)	102	% Recovery	1	NA		12/12/00
X00469-028		8260							
X00469	XG.2000.1359-28	NA	1,2 Dichloroethane-D4 (SS)	94	% Recovery	1	NA		12/13/00
X00469	XG.2000.1359-28	NA	4-Bromofluorobenzene (SS)	98	% Recovery	1	NA		12/13/00
X00469	XG.2000.1359-28	NA	Dibromofluoromethane (SS)	100	% Recovery	1	NA		12/13/00
X00469	XG.2000.1359-28	NA	Toluene-D8 (SS)	100	% Recovery	1	NA		12/13/00

QC Type **MS** QC Matrix **SOLID**

QC Group	Run Sequence	CAS #	Analyte	Result	Units	Dilution Factor	Detection Limit	Code	Run Date
X00448-005		BTEXALL							
X00448	XG.2000.1303-11	NA	4-Bromofluorobenzene	100	% Recovery	1	NA		11/21/00
X00448	XG.2000.1303-11	NA	aaa-Trifluorotoluene	101	% Recovery	1	NA		11/21/00
X00448	XG.2000.1303-11	NA	Bromochloromethane	31	% Recovery	1	NA		11/21/00
X00448	XG.2000.1303-11	NA	Bromochloropropane	42	% Recovery	1	NA		11/21/00
X00448	XG.2000.1303-11	NA	Dichlorobutane	48	% Recovery	1	NA		11/21/00
X00454-013		8260							
X00454	XG.2000.1313-13	NA	1,2 Dichloroethane-D4 (SS)	97	% Recovery	1	NA		11/30/00
X00454	XG.2000.1313-13	NA	4-Bromofluorobenzene (SS)	99	% Recovery	1	NA		11/30/00
X00454	XG.2000.1313-13	NA	Dibromofluoromethane (SS)	100	% Recovery	1	NA		11/30/00
X00454	XG.2000.1313-13	NA	Toluene-D8 (SS)	100	% Recovery	1	NA		11/30/00
X00457-005		GRO							
X00457	XG.2000.1317-5	NA	4-Bromofluorobenzene-FID	97	% Recovery	1	NA		12/01/

Surrogate Summary: QC

C : **CH2MHILL**

Project: **0011269** **160660 (TO.10) KAFB**

X00457	XG.2000.1317-5	NA	4-Bromofluorobenzene-PID	ND	% Recovery	1	NA		12/01/00
X00457	XG.2000.1317-5	NA	aaa-Trifluorotoluene-FID	104	% Recovery	1	NA		12/01/00
X00457	XG.2000.1317-5	NA	aaa-Trifluorotoluene-PID	ND	% Recovery	1	NA		12/01/00
X00459-005		DRO							
X00459	XG.2000.1315-7	NA	O-terphenyl	103	% Recovery	1	NA		12/01/00
X00469-013		8260							
X00469	XG.2000.1359-13	NA	1,2 Dichloroethane-D4 (SS)	83	% Recovery	1	NA		12/11/00
X00469	XG.2000.1359-13	NA	4-Bromofluorobenzene (SS)	96	% Recovery	1	NA		12/11/00
X00469	XG.2000.1359-13	NA	Dibromofluoromethane (SS)	92	% Recovery	1	NA		12/11/00
X00469	XG.2000.1359-13	NA	Toluene-D8 (SS)	102	% Recovery	1	NA		12/11/00

QC Type **MSD** QC Matrix **SOLID**

QC Group	Run Sequence	CAS #	Analyte	Result	Units	Dilution Factor	Detection Limit	Code	Run Date
X00448-006		BTEXALL							
X00448	XG.2000.1303-12	NA	4-Bromofluorobenzene	100	% Recovery	1	NA		11/21/00
X00448	XG.2000.1303-12	NA	aaa-Trifluorotoluene	102	% Recovery	1	NA		11/21/00
X00448	XG.2000.1303-12	NA	Bromochloromethane	159	% Recovery	1	NA		11/21/00
X[illegible]	XG.2000.1303-12	NA	Bromochloropropane	63	% Recovery	1	NA		11/21/00
[illegible]	XG.2000.1303-12	NA	Dichlorobutane	235	% Recovery	1	NA		11/21/00
X00454-014		8260							
X00454	XG.2000.1313-14	NA	1,2 Dichloroethane-D4 (SS)	99	% Recovery	1	NA		11/30/00
X00454	XG.2000.1313-14	NA	4-Bromofluorobenzene (SS)	98	% Recovery	1	NA		11/30/00
X00454	XG.2000.1313-14	NA	Dibromofluoromethane (SS)	100	% Recovery	1	NA		11/30/00
X00454	XG.2000.1313-14	NA	Toluene-D8 (SS)	101	% Recovery	1	NA		11/30/00
X00457-006		GRO							
X00457	XG.2000.1317-6	NA	4-Bromofluorobenzene-FID	97	% Recovery	1	NA		12/01/00
X00457	XG.2000.1317-6	NA	4-Bromofluorobenzene-PID	ND	% Recovery	1	NA		12/01/00
X00457	XG.2000.1317-6	NA	aaa-Trifluorotoluene-FID	103	% Recovery	1	NA		12/01/00
X00457	XG.2000.1317-6	NA	aaa-Trifluorotoluene-PID	ND	% Recovery	1	NA		12/01/00
X00459-006		DRO							
X00459	XG.2000.1315-8	NA	O-terphenyl	102	% Recovery	1	NA		12/01/00
X00469-014		8260							
X00469	XG.2000.1359-14	NA	1,2 Dichloroethane-D4 (SS)	86	% Recovery	1	NA		12/11/00
X00469	XG.2000.1359-14	NA	4-Bromofluorobenzene (SS)	98	% Recovery	1	NA		12/11/00
X00469	XG.2000.1359-14	NA	Dibromofluoromethane (SS)	90	% Recovery	1	NA		12/11/00
X00469	XG.2000.1359-14	NA	Toluene-D8 (SS)	102	% Recovery	1	NA		12/11/00

Surrogate Summary: QC

Client: **CH2MHILL**

Project: **0011269** **160660 (TO.10) KAFB**

QC Type **MB** QC Matrix **WASTE**

QC Group	Run Sequence	CAS #	Analyte	Result	Units	Dilution Factor	Detection Limit	Code	Run Date
X00454-022		8260							
X00454	XG.2000.1349-1	NA	1,2 Dichloroethane-D4 (SS)	85	% Recovery	1	NA		12/05/0
X00454	XG.2000.1349-1	NA	4-Bromofluorobenzene (SS)	93	% Recovery	1	NA		12/05/0
X00454	XG.2000.1349-1	NA	Dibromofluoromethane (SS)	99	% Recovery	1	NA		12/05/0
X00454	XG.2000.1349-1	NA	Toluene-D8 (SS)	101	% Recovery	1	NA		12/05/0

QC Type **LCS** QC Matrix **WATER**

QC Group	Run Sequence	CAS #	Analyte	Result	Units	Dilution Factor	Detection Limit	Code	Run Date
X00444-002		DRO							
X00444	XG.2000.1288-2	NA	O-terphenyl	85	% Recovery	1	NA		11/17/0
X00445-002		GRO							
X00445	XG.2000.1286-5	NA	4-Bromofluorobenzene-FID	101	% Recovery	1	NA		11/18/0
X00445	XG.2000.1286-5	NA	4-Bromofluorobenzene-PID	ND	% Recovery	1	NA		11/18
X00445	XG.2000.1286-5	NA	aaa-Trifluorotoluene-FID	105	% Recovery	1	NA		11/18
X00445	XG.2000.1286-5	NA	aaa-Trifluorotoluene-PID	ND	% Recovery	1	NA		11/18/0
X00447-003		8260							
X00447	XG.2000.1301-3	NA	1,2 Dichloroethane-D4 (SS)	82	% Recovery	1	NA		11/20/0
X00447	XG.2000.1301-3	NA	4-Bromofluorobenzene (SS)	95	% Recovery	1	NA		11/20/0
X00447	XG.2000.1301-3	NA	Dibromofluoromethane (SS)	97	% Recovery	1	NA		11/20/0
X00447	XG.2000.1301-3	NA	Toluene-D8 (SS)	100	% Recovery	1	NA		11/20/0
X00460-002		8270							
X00460	XG.2000.1328-2	NA	*2,4,6-TRIBROMOPHENOL	84	% Recovery	1	NA		12/04/0
X00460	XG.2000.1328-2	NA	*2-FLUOROBIPHENYL	88	% Recovery	1	NA		12/04/0
X00460	XG.2000.1328-2	NA	*2-FLUOROPHENOL	46	% Recovery	1	NA		12/04/0
X00460	XG.2000.1328-2	NA	*NITROBENZENE-D5	87	% Recovery	1	NA		12/04/0
X00460	XG.2000.1328-2	NA	*PHENOL-D6	35	% Recovery	1	NA		12/04/0
X00460	XG.2000.1328-2	NA	*TERPHENYL-D14	66	% Recovery	1	NA		12/04/0

QC Type **LCSD** QC Matrix **WATER**

QC Group	Run Sequence	CAS #	Analyte	Result	Units	Dilution Factor	Detection Limit	Code	Run Date
X00444-003		DRO							
X00444	XG.2000.1288-3	NA	O-terphenyl	81	% Recovery	1	NA		11/17/0
X00445-003		GRO							
X00445	XG.2000.1286-6	NA	4-Bromofluorobenzene-FID	103	% Recovery	1	NA		11/18

Surrogate Summary: QC

Client: CH2MHILL

Project: 0011269 160660 (TO.10) KAFB

X00445	XG.2000.1286-6	NA	4-Bromofluorobenzene-PID	ND	% Recovery	1	NA	11/18/00
X00445	XG.2000.1286-6	NA	aaa-Trifluorotoluene-FID	104	% Recovery	1	NA	11/18/00
X00445	XG.2000.1286-6	NA	aaa-Trifluorotoluene-PID	ND	% Recovery	1	NA	11/18/00
X00447-004		**8260**						
X00447	XG.2000.1301-4	NA	1,2 Dichloroethane-D4 (SS)	84	% Recovery	1	NA	11/20/00
X00447	XG.2000.1301-4	NA	4-Bromofluorobenzene (SS)	96	% Recovery	1	NA	11/20/00
X00447	XG.2000.1301-4	NA	Dibromofluoromethane (SS)	98	% Recovery	1	NA	11/20/00
X00447	XG.2000.1301-4	NA	Toluene-D8 (SS)	100	% Recovery	1	NA	11/20/00
X00460-003		**8270**						
X00460	XG.2000.1328-3	NA	*2,4,6-TRIBROMOPHENOL	88	% Recovery	1	NA	12/04/00
X00460	XG.2000.1328-3	NA	*2-FLUOROBIPHENYL	88	% Recovery	1	NA	12/04/00
X00460	XG.2000.1328-3	NA	*2-FLUOROPHENOL	43	% Recovery	1	NA	12/04/00
X00460	XG.2000.1328-3	NA	*NITROBENZENE-D5	84	% Recovery	1	NA	12/04/00
X00460	XG.2000.1328-3	NA	*PHENOL-D6	34	% Recovery	1	NA	12/04/00
X00460	XG.2000.1328-3	NA	*TERPHENYL-D14	73	% Recovery	1	NA	12/04/00

QC Type **MB** QC Matrix **WATER**

QC Group	Run Sequence	CAS #	Analyte	Result	Units	Dilution Factor	Detection Limit	Code	Run Date
4-001		**DRO**							
X[illegible]4	XG.2000.1288-1	NA	O-terphenyl	75	% Recovery	1	NA		11/17/00
X00444-009		**DRO**							
X00444	XG.2000.1315-1	NA	O-terphenyl	101	% Recovery	1	NA		12/01/00
X00444-011		**DRO**							
X00444	XG.2000.1354-1	NA	O-terphenyl	80	% Recovery	1	NA		12/12/00
X00445-001		**GRO**							
X00445	XG.2000.1286-4	NA	4-Bromofluorobenzene-FID	95	% Recovery	1	NA		11/18/00
X00445	XG.2000.1286-4	NA	4-Bromofluorobenzene-PID	382	% Recovery	1	NA		11/18/00
X00445	XG.2000.1286-4	NA	aaa-Trifluorotoluene-FID	100	% Recovery	1	NA		11/18/00
X00445	XG.2000.1286-4	NA	aaa-Trifluorotoluene-PID	14	% Recovery	1	NA		11/18/00
X00445-007		**GRO**							
X00445	XG.2000.1317-9	NA	4-Bromofluorobenzene-FID	85	% Recovery	1	NA		12/01/00
X00445	XG.2000.1317-9	NA	4-Bromofluorobenzene-PID	ND	% Recovery	1	NA		12/01/00
X00445	XG.2000.1317-9	NA	aaa-Trifluorotoluene-FID	103	% Recovery	1	NA		12/01/00
X00445	XG.2000.1317-9	NA	aaa-Trifluorotoluene-PID	ND	% Recovery	1	NA		12/01/00
X00445-009		**GRO**							
X00445	XG.2000.1347-1	NA	4-Bromofluorobenzene-FID	89	% Recovery	1	NA		12/08/00
X00445	XG.2000.1347-1	NA	4-Bromofluorobenzene-PID	ND	% Recovery	1	NA		12/08/00
X00445	XG.2000.1347-1	NA	aaa-Trifluorotoluene-FID	97	% Recovery	1	NA		12/08/00
X00445	XG.2000.1347-1	NA	aaa-Trifluorotoluene-PID	ND	% Recovery	1	NA		12/08/00
X00447-001		**8260**							
X00447	XG.2000.1301-1	NA	1,2 Dichloroethane-D4 (SS)	88	% Recovery	1	NA		11/20/00
[illegible]7	XG.2000.1301-1	NA	4-Bromofluorobenzene (SS)	96	% Recovery	1	NA		11/20/00
X00447	XG.2000.1301-1	NA	Dibromofluoromethane (SS)	98	% Recovery	1	NA		11/20/00

Surrogate Summary: QC

Client: **CH2MHILL**

Project: **0011269** **160660 (TO.10) KAFB**

X00447	XG.2000.1301-1	NA	Toluene-D8 (SS)	99	% Recovery	1	NA	11/20/00
X00447-005		8260						
X00447	XG.2000.1301-5	NA	1,2 Dichloroethane-D4 (SS)	89	% Recovery	1	NA	11/21/00
X00447	XG.2000.1301-5	NA	4-Bromofluorobenzene (SS)	98	% Recovery	1	NA	11/21/00
X00447	XG.2000.1301-5	NA	Dibromofluoromethane (SS)	99	% Recovery	1	NA	11/21/00
X00447	XG.2000.1301-5	NA	Toluene-D8 (SS)	100	% Recovery	1	NA	11/21/00
X00447-012		8260						
X00447	XG.2000.1314-1	NA	1,2 Dichloroethane-D4 (SS)	91	% Recovery	1	NA	11/30/00
X00447	XG.2000.1314-1	NA	4-Bromofluorobenzene (SS)	97	% Recovery	1	NA	11/30/00
X00447	XG.2000.1314-1	NA	Dibromofluoromethane (SS)	100	% Recovery	1	NA	11/30/00
X00447	XG.2000.1314-1	NA	Toluene-D8 (SS)	100	% Recovery	1	NA	11/30/00
X00447-017		8260						
X00447	XG.2000.1314-6	NA	1,2 Dichloroethane-D4 (SS)	92	% Recovery	1	NA	12/01/00
X00447	XG.2000.1314-6	NA	4-Bromofluorobenzene (SS)	98	% Recovery	1	NA	12/01/00
X00447	XG.2000.1314-6	NA	Dibromofluoromethane (SS)	100	% Recovery	1	NA	12/01/00
X00447	XG.2000.1314-6	NA	Toluene-D8 (SS)	99	% Recovery	1	NA	12/01/00
X00447-025		8260						
X00447	XG.2000.1330-1	NA	1,2 Dichloroethane-D4 (SS)	90	% Recovery	1	NA	12/04/00
X00447	XG.2000.1330-1	NA	4-Bromofluorobenzene (SS)	95	% Recovery	1	NA	12/04/00
X00447	XG.2000.1330-1	NA	Dibromofluoromethane (SS)	101	% Recovery	1	NA	12/04/00
X00447	XG.2000.1330-1	NA	Toluene-D8 (SS)	102	% Recovery	1	NA	12/04/00
X00447-029		8260						
X00447	XG.2000.1330-5	NA	1,2 Dichloroethane-D4 (SS)	85	% Recovery	1	NA	12/05/00
X00447	XG.2000.1330-5	NA	4-Bromofluorobenzene (SS)	95	% Recovery	1	NA	12/05/00
X00447	XG.2000.1330-5	NA	Dibromofluoromethane (SS)	98	% Recovery	1	NA	12/05/00
X00447	XG.2000.1330-5	NA	Toluene-D8 (SS)	100	% Recovery	1	NA	12/05/00
X00460-001		8270						
X00460	XG.2000.1328-1	NA	*2,4,6-TRIBROMOPHENOL	87	% Recovery	1	NA	12/04/00
X00460	XG.2000.1328-1	NA	*2-FLUOROBIPHENYL	89	% Recovery	1	NA	12/04/00
X00460	XG.2000.1328-1	NA	*2-FLUOROPHENOL	47	% Recovery	1	NA	12/04/00
X00460	XG.2000.1328-1	NA	*NITROBENZENE-D5	87	% Recovery	1	NA	12/04/00
X00460	XG.2000.1328-1	NA	*PHENOL-D6	37	% Recovery	1	NA	12/04/00
X00460	XG.2000.1328-1	NA	*TERPHENYL-D14	74	% Recovery	1	NA	12/04/00
X00460-007		8270						
X00460	XG.2000.1332-1	NA	*2,4,6-TRIBROMOPHENOL	80	% Recovery	1	NA	12/05/00
X00460	XG.2000.1332-1	NA	*2-FLUOROBIPHENYL	83	% Recovery	1	NA	12/05/00
X00460	XG.2000.1332-1	NA	*2-FLUOROPHENOL	39	% Recovery	1	NA	12/05/00
X00460	XG.2000.1332-1	NA	*NITROBENZENE-D5	77	% Recovery	1	NA	12/05/00
X00460	XG.2000.1332-1	NA	*PHENOL-D6	31	% Recovery	1	NA	12/05/00
X00460	XG.2000.1332-1	NA	*TERPHENYL-D14	70	% Recovery	1	NA	12/05/00
X00460-009		8270						
X00460	XG.2000.1369-12	NA	*2,4,6-TRIBROMOPHENOL	102	% Recovery	1	NA	12/14/00
X00460	XG.2000.1369-12	NA	*2-FLUOROBIPHENYL	84	% Recovery	1	NA	12/14/00
X00460	XG.2000.1369-12	NA	*2-FLUOROPHENOL	47	% Recovery	1	NA	12/14/00
X00460	XG.2000.1369-12	NA	*NITROBENZENE-D5	78	% Recovery	1	NA	12/14/00
X00460	XG.2000.1369-12	NA	*PHENOL-D6	33	% Recovery	1	NA	12/1
X00460	XG.2000.1369-12	NA	*TERPHENYL-D14	100	% Recovery	1	NA	12/14

Surrogate Summary: QC

Client: **CH2MHILL**

Project: **0011269** **160660 (TO.10) KAFB**

QC Type **MS** QC Matrix **WATER**

QC Group	Run Sequence	CAS #	Analyte	Result	Units	Dilution Factor	Detection Limit	Code	Run Date
X00444-007		DRO							
X00444	XG.2000.1288-7	NA	O-terphenyl	90	% Recovery	1	NA		11/17/00
X00445-005		GRO							
X00445	XG.2000.1286-8	NA	4-Bromofluorobenzene-FID	104	% Recovery	1	NA		11/18/00
X00445	XG.2000.1286-8	NA	4-Bromofluorobenzene-PID	ND	% Recovery	1	NA		11/18/00
X00445	XG.2000.1286-8	NA	aaa-Trifluorotoluene-FID	108	% Recovery	1	NA		11/18/00
X00445	XG.2000.1286-8	NA	aaa-Trifluorotoluene-PID	242	% Recovery	1	NA		11/18/00
X00447-009		8260							
X00447	XG.2000.1301-8	NA	1,2 Dichloroethane-D4 (SS)	95	% Recovery	1	NA		11/21/00
X00447	XG.2000.1301-8	NA	4-Bromofluorobenzene (SS)	102	% Recovery	1	NA		11/21/00
X00447	XG.2000.1301-8	NA	Dibromofluoromethane (SS)	98	% Recovery	1	NA		11/21/00
X00447	XG.2000.1301-8	NA	Toluene-D8 (SS)	100	% Recovery	1	NA		11/21/00
X00460-005		8270							
X00460	XG.2000.1328-5	NA	*2,4,6-TRIBROMOPHENOL	108	% Recovery	2	NA		12/04/00
[illegible]0	XG.2000.1328-5	NA	*2-FLUOROBIPHENYL	96	% Recovery	2	NA		12/04/00
[illegible]0	XG.2000.1328-5	NA	*2-FLUOROPHENOL	57	% Recovery	2	NA		12/04/00
X00460	XG.2000.1328-5	NA	*NITROBENZENE-D5	94	% Recovery	2	NA		12/04/00
X00460	XG.2000.1328-5	NA	*PHENOL-D6	42	% Recovery	2	NA		12/04/00
X00460	XG.2000.1328-5	NA	*TERPHENYL-D14	102	% Recovery	2	NA		12/04/00

QC Type **MSD** QC Matrix **WATER**

QC Group	Run Sequence	CAS #	Analyte	Result	Units	Dilution Factor	Detection Limit	Code	Run Date
X00444-008		DRO							
X00444	XG.2000.1288-8	NA	O-terphenyl	90	% Recovery	1	NA		11/17/00
X00445-006		GRO							
X00445	XG.2000.1286-9	NA	4-Bromofluorobenzene-FID	101	% Recovery	1	NA		11/18/00
X00445	XG.2000.1286-9	NA	4-Bromofluorobenzene-PID	ND	% Recovery	1	NA		11/18/00
X00445	XG.2000.1286-9	NA	aaa-Trifluorotoluene-FID	103	% Recovery	1	NA		11/18/00
X00445	XG.2000.1286-9	NA	aaa-Trifluorotoluene-PID	ND	% Recovery	1	NA		11/18/00
X00447-010		8260							
X00447	XG.2000.1301-9	NA	1,2 Dichloroethane-D4 (SS)	97	% Recovery	1	NA		11/21/00
X00447	XG.2000.1301-9	NA	4-Bromofluorobenzene (SS)	101	% Recovery	1	NA		11/21/00
X00447	XG.2000.1301-9	NA	Dibromofluoromethane (SS)	101	% Recovery	1	NA		11/21/00
X00447	XG.2000.1301-9	NA	Toluene-D8 (SS)	102	% Recovery	1	NA		11/21/00
[illegible]160-006		8270							
[illegible]0	XG.2000.1328-6	NA	*2,4,6-TRIBROMOPHENOL	109	% Recovery	1	NA		12/04/00
X00460	XG.2000.1328-6	NA	*2-FLUOROBIPHENYL	95	% Recovery	1	NA		12/04/00

Surrogate Summary: QC

Client: **CH2MHILL**

Project: **0011269** **160660 (TO.10) KAFB**

X00460	XG.2000.1328-6	NA	*2-FLUOROPHENOL	53	% Recovery	1	NA	12/04/00
X00460	XG.2000.1328-6	NA	*NITROBENZENE-D5	92	% Recovery	1	NA	12/04/00
X00460	XG.2000.1328-6	NA	*PHENOL-D6	39	% Recovery	1	NA	12/04/00
X00460	XG.2000.1328-6	NA	*TERPHENYL-D14	98	% Recovery	1	NA	12/04/00

Assaigai Analytical Laboratories, Inc.

Surrogate Summary: Fraction

t: CH2MHILL

Project: 0011269 160660 (TO.10) KAFB

Client Sample ID: **SB29-240'** Sample Matrix: **SOIL**

QC Group	Run Sequence	CAS #	Analyte	Result	Units	Dilution Factor	Detection Limit	Code	Run Date
0011269-01A		GRO							X00457-004
X00457	XG.2000.1317-4	NA	4-Bromofluorobenzene-FID	85	% Recovery	1	NA		12/01/00
X00457	XG.2000.1317-4	NA	4-Bromofluorobenzene-PID	ND	% Recovery	1	NA		12/01/00
X00457	XG.2000.1317-4	NA	aaa-Trifluorotoluene-FID	105	% Recovery	1	NA		12/01/00
X00457	XG.2000.1317-4	NA	aaa-Trifluorotoluene-PID	ND	% Recovery	1	NA		12/01/00
0011269-01B		DRO							X00459-004
X00459	XG.2000.1315-6	NA	O-terphenyl	92	% Recovery	1	NA		12/01/00
0011269-01C		BTEXALL							X00448-015
X00448	XG.2000.1320-5	NA	4-Bromofluorobenzene	98	% Recovery	1	NA		12/01/00
X00448	XG.2000.1320-5	NA	aaa-Trifluorotoluene	100	% Recovery	1	NA		12/01/00
X00448	XG.2000.1320-5	NA	Bromochloromethane	19	% Recovery	1	NA		12/01/00
X00448	XG.2000.1320-5	NA	Bromochloropropane	46	% Recovery	1	NA		12/01/00
X00448	XG.2000.1320-5	NA	Dichlorobutane	ND	% Recovery	1	NA		12/01/00

Sample ID: **EQUIP RINSE** Sample Matrix: **H2O**

QC Group	Run Sequence	CAS #	Analyte	Result	Units	Dilution Factor	Detection Limit	Code	Run Date
0011269-02A		8270							X00460-004
X00460	XG.2000.1328-4	NA	*2,4,6-TRIBROMOPHENOL	75	% Recovery	1	NA		12/04/00
X00460	XG.2000.1328-4	NA	*2-FLUOROBIPHENYL	85	% Recovery	1	NA		12/04/00
X00460	XG.2000.1328-4	NA	*2-FLUOROPHENOL	41	% Recovery	1	NA		12/04/00
X00460	XG.2000.1328-4	NA	*NITROBENZENE-D5	82	% Recovery	1	NA		12/04/00
X00460	XG.2000.1328-4	NA	*PHENOL-D6	33	% Recovery	1	NA		12/04/00
X00460	XG.2000.1328-4	NA	*TERPHENYL-D14	63	% Recovery	1	NA		12/04/00
0011269-02B		GRO							X00445-008
X00445	XG.2000.1317-10	NA	4-Bromofluorobenzene-FID	85	% Recovery	1	NA		12/01/00
X00445	XG.2000.1317-10	NA	4-Bromofluorobenzene-PID	ND	% Recovery	1	NA		12/01/00
X00445	XG.2000.1317-10	NA	aaa-Trifluorotoluene-FID	101	% Recovery	1	NA		12/01/00
X00445	XG.2000.1317-10	NA	aaa-Trifluorotoluene-PID	ND	% Recovery	1	NA		12/01/00
0011269-02B		8260							X00447-023
X00447	XG.2000.1324-1	NA	1,2 Dichloroethane-D4 (SS)	85	% Recovery	1	NA		12/01/00
X00447	XG.2000.1324-1	NA	4-Bromofluorobenzene (SS)	95	% Recovery	1	NA		12/01/00
X00447	XG.2000.1324-1	NA	Dibromofluoromethane (SS)	98	% Recovery	1	NA		12/01/00
X00447	XG.2000.1324-1	NA	Toluene-D8 (SS)	100	% Recovery	1	NA		12/01/00
0011269-02C		DRO							X00444-010
X00444	XG.2000.1315-2	NA	O-terphenyl	98	% Recovery	1	NA		12/01/00

Surrogate Summary: Fraction

Client: **CH2MHILL**

Project: **0011269** **160660 (TO.10) KAFB**

Client Sample ID **TRIP BLANK** Sample Matrix **H2O**

QC Group	Run Sequence	CAS #	Analyte	Result	Units	Dilution Factor	Detection Limit	Code	Run Date
0011269-03A		**8260**							**X00447-034**
X00447	XG.2000.1330-10	NA	1,2 Dichloroethane-D4 (SS)	88	% Recovery	1	NA		12/05/00
X00447	XG.2000.1330-10	NA	4-Bromofluorobenzene (SS)	97	% Recovery	1	NA		12/05/00
X00447	XG.2000.1330-10	NA	Dibromofluoromethane (SS)	100	% Recovery	1	NA		12/05/00
X00447	XG.2000.1330-10	NA	Toluene-D8 (SS)	99	% Recovery	1	NA		12/05/00

Client Sample ID **5630** Sample Matrix **SOIL**

QC Group	Run Sequence	CAS #	Analyte	Result	Units	Dilution Factor	Detection Limit	Code	Run Date
0011269-04A		**GRO**							**X00457-007**
X00457	XG.2000.1317-7	NA	4-Bromofluorobenzene-FID	90	% Recovery	1	NA		12/01/00
X00457	XG.2000.1317-7	NA	4-Bromofluorobenzene-PID	194	% Recovery	1	NA		12/01/00
X00457	XG.2000.1317-7	NA	aaa-Trifluorotoluene-FID	101	% Recovery	1	NA		12/01/00
X00457	XG.2000.1317-7	NA	aaa-Trifluorotoluene-PID	18	% Recovery	1	NA		12/01/00
0011269-04B		**DRO**							**X00459-**
X00459	XG.2000.1315-9	NA	O-terphenyl	95	% Recovery	1	NA		12/01/00
0011269-04C		**8260**							**X00469-006**
X00469	XG.2000.1359-6	NA	1,2 Dichloroethane-D4 (SS)	89	% Recovery	1	NA		12/11/00
X00469	XG.2000.1359-6	NA	4-Bromofluorobenzene (SS)	97	% Recovery	1	NA		12/11/00
X00469	XG.2000.1359-6	NA	Dibromofluoromethane (SS)	98	% Recovery	1	NA		12/11/00
X00469	XG.2000.1359-6	NA	Toluene-D8 (SS)	101	% Recovery	1	NA		12/11/00

Client Sample ID **6430** Sample Matrix **SOIL**

QC Group	Run Sequence	CAS #	Analyte	Result	Units	Dilution Factor	Detection Limit	Code	Run Date
0011269-05A		**GRO**							**X00457-008**
X00457	XG.2000.1319-1	NA	4-Bromofluorobenzene-FID	86	% Recovery	1	NA		12/01/00
X00457	XG.2000.1319-1	NA	4-Bromofluorobenzene-PID	ND	% Recovery	1	NA		12/01/00
X00457	XG.2000.1319-1	NA	aaa-Trifluorotoluene-FID	105	% Recovery	1	NA		12/01/00
X00457	XG.2000.1319-1	NA	aaa-Trifluorotoluene-PID	ND	% Recovery	1	NA		12/01/00
0011269-05B		**DRO**							**X00459-008**
X00459	XG.2000.1315-10	NA	O-terphenyl	88	% Recovery	1	NA		12/01/00
0011269-05C		**8260**							**X00454-021**
X00454	XG.2000.1326-2	NA	1,2 Dichloroethane-D4 (SS)	82	% Recovery	1	NA		12/01/00
X00454	XG.2000.1326-2	NA	4-Bromofluorobenzene (SS)	92	% Recovery	1	NA		12/01/
X00454	XG.2000.1326-2	NA	Dibromofluoromethane (SS)	44	% Recovery	1	NA		12/01

Surrogate Summary: Fraction

t: **CH2MHILL**

Project: **0011269** **160660 (TO.10) KAFB**

X00454	XG.2000.1326-2	NA	Toluene-D8 (SS)	99	% Recovery	1	NA	12/01/00

ASSAIGAI ANALYTICAL LABORATORIES, INC.

Chain of Custody Record

7300 JEFFERSON, N.E.
ALBUQUERQUE, NEW MEXICO 87109
(505) 345-8964

3332 WEDGEWOOD
EL PASO, TEXAS 79925
(915) 593-6000

127 EASTGATE DRIVE, 212-C
LOS ALAMOS, NEW MEXICO 87544
(505) 662-2558

Lab job no.: 11269 Date 11/29 – 11/30

Page 1 of 1

Client: CH2M HILL

Project Manager / Contact: Mischa Halloran

Address: 6001 Indian School Rd NE #350

Telephone No.: 884 5600

City / State / Zip: ALBQ NM 87110

Fax No.: 883-7507

Project Name / Number: 160660 (TO-10) KAFB

Samplers: (Signature)

Contract / Purchase Order / Quote

AAL Fraction Number	Field Sample Number / Location	Date	Time	Sample Type	Type / Size of Container	Preservation Temp.	Preservation Chemical	No. of Containers	GRO	DRO	BTEX	VOC	SVOC					Remarks
	SB29-2405	11/29	1400	Soil	4oz VOA	ICE	NO		X	X	X							
	[illegible]	11/29	1500	H_2O	2x 1L AMBER	ICE	NO	2					X					
	[illegible]	11/29	1500	H_2O	40mL VOA	ICE	HCL	4	X	X		X						
	TRIP BLANK	11/29	1500	H_2O	40mL VOA	ICE	HCL	1				X						
	5630	11/30	1500	Soil	4oz VOA	ICE	NO	2	X	X		X						
	6430	11/30	1500	Soil	4oz VOA	ICE	NO	2	X	X		X						

Relinquished by:	Date	Received by:	Relinquished by:	Date	Received by:
Signature		Signature	Signature		Signature
Printed	Time	Printed	Printed	Time	Printed
Company		Company	Company		Company
Reason		Reason	Reason		Reason

Method of Shipment:

Shipment No.

Special Instructions:

Comments:

After analysis, samples are to be:

- ☐ Disposed of (additional fee)
- ☐ Stored (30 days max)
- ☐ Stored over 30 days (additional fee)
- ☐ Returned to customer

COLOR

ASSAIGAI
ANALYTICAL
LABORATORIES, INC.
7300 Jefferson, NE • Albuquerque, New Mexico 87109 • (505) 345-8964 • FAX (505) 345-7259
3332 Wedgewood Dr., Suite N • El Paso, Texas 79925 • (915) 593-6000 • FAX (915) 593-7820
127 Eastgate Drive, 212-C • Los Alamos, New Mexico 87544 • (505) 662-2558

RECEIVED MAR 13 2001

Explanation of codes

B	analyte detected in Method Blank
E	result is estimated
H	analyzed out of hold time
N	tentatively identified compound
S	subcontracted
1-9	see footnote

CH2MHILL
attn: **AMY HALLORAN**
6001 INDIAN SCHOOL RD NE STE 350
ALBUQUERQUE, NM 87110-4140

Assaigai Analytical Laboratories, Inc.

Certificate of Analysis

Client: **CH2MHILL**
Project: **0102298** **160660.02.FF.SA**

William P. Biava: President of Assaigai Analytical Laboratories, Inc.

Client Sample ID ***ST 106 SB29A 260'*** Sample Matrix ***SOIL*** Sample Collected ***02/26/01 15:20:00***

QC Group	Run Sequence	CAS #	Analyte	Result	Units	Dilution Factor	Detection Limit	Code	Run Date
0102298-01A		**SW846 5030A/8015A GRO by GC/FID**							
X0150	XG.2001.238-3		Gasoline Range Organics	0.50	mg / Kg	1	0.25		02/27/01
0102298-01B		**SW846 ME/8015A Diesel Range Organics by GC/FID**							
X0148	XG.2001.239-3		Diesel Range Organics	ND	mg / Kg	1	25		02/27/01
0102298-01C		**SW846 8260A Purgeable VOCs by GC/MS**							
X0163	XG.2001.273-5	75-34-3	1,1 Dichloroethane	ND	mg / Kg	1	0.005		03/06/01
X0163	XG.2001.273-5	75-34-3	1,1 Dichloroethene	ND	mg / Kg	1	0.005		03/06/01
X0163	XG.2001.273-5	71-55-6	1,1,1 Trichloroethane	ND	mg / Kg	1	0.005		03/06/01
X0163	XG.2001.273-5	630-20-6	1,1,1,2 Tetrachloroethane	ND	mg / Kg	1	0.005		03/06/01
X0163	XG.2001.273-5	79-00-5	1,1,2 Trichloroethane	ND	mg / Kg	1	0.005		03/06/01
X0163	XG.2001.273-5	79-34-5	1,1,2,2 Tetrachloroethane	ND	mg / Kg	1	0.005		03/06/01
X0163	XG.2001.273-5	106-93-4	1,2 Dibromoethane (EDB)	ND	mg / Kg	1	0.005		03/06/01
X0163	XG.2001.273-5	95-50-1	1,2 Dichlorobenzene	ND	mg / Kg	1	0.005		03/06/01
X0163	XG.2001.273-5	107-06-2	1,2 Dichloroethane	ND	mg / Kg	1	0.005		03/06/01
X0163	XG.2001.273-5	78-87-5	1,2 Dichloropropane	ND	mg / Kg	1	0.005		03/06/01
X0163	XG.2001.273-5	96-18-4	1,2,3 Trichloropropane	ND	mg / Kg	1	0.005		03/06/01
X0163	XG.2001.273-5	95-63-6	1,2,4-Trimethylbenzene	ND	mg / Kg	1	0.005		03/06/01
X0163	XG.2001.273-5	541-73-1	1,3 Dichlorobenzene	ND	mg / Kg	1	0.005		03/06/01
X0163	XG.2001.273-5	108-67-8	1,3,5-Trimethylbenzene	ND	mg / Kg	1	0.005		03/06/01
X0163	XG.2001.273-5	764-41-0	1,4 Dichloro-2-butene	ND	mg / Kg	1	0.05		03/06/01
[illegible]3	XG.2001.273-5	106-46-7	1,4 Dichlorobenzene	ND	mg / Kg	1	0.005		03/06/01
[illegible]163	XG.2001.273-5	78-93-3	2-Butanone (MEK)	0.058	mg / Kg	1	0.025		03/06/01

Member
American Council of
Independent Laboratories, Inc.

REPRODUCTION OF THIS REPORT IN LESS THAN FULL REQUIRES THE WRITTEN CONSENT OF AAL.
THIS REPORT MAY NOT BE USED IN ANY MANNER BY THE CLIENT OR ANY OTHER THIRD PARTY TO CLAIM
PRODUCT ENDORSEMENT BY ANY ACCREDITATION PROGRAM.

Assaigai Analytical Laboratories, Inc.

Certificate of Analysis

Client: **CH2MHILL**

Project: **0102298** **160660.02.FF.SA**

X0163	XG.2001.273-5	110-75-8	2-Chloroethylvinylether	ND	mg / Kg	1	0.025	03/06/01
X0163	XG.2001.273-5	591-78-6	2-Hexanone (MBK)	ND	mg / Kg	1	0.025	03/06/01
X0163	XG.2001.273-5	108-10-1	4-Methyl-2-pentanone (MIBK)	ND	mg / Kg	1	0.025	03/06/01
X0163	XG.2001.273-5	67-64-1	Acetone	0.59	mg / Kg	1	0.05	03/06/01
X0163	XG.2001.273-5	107-02-8	Acrolein	ND	mg / Kg	1	0.1	03/06/01
X0163	XG.2001.273-5	107-13-1	Acrylonitrile	ND	mg / Kg	1	0.1	03/06/01
X0163	XG.2001.273-5	71-43-2	Benzene	ND	mg / Kg	1	0.005	03/06/0
X0163	XG.2001.273-5	75-27-4	Bromodichloromethane	ND	mg / Kg	1	0.005	03/06/0
X0163	XG.2001.273-5	75-25-2	Bromoform	ND	mg / Kg	1	0.005	03/06/0
X0163	XG.2001.273-5	74-83-9	Bromomethane	ND	mg / Kg	1	0.025	03/06/0
X0163	XG.2001.273-5	75-15-0	Carbon disulfide	ND	mg / Kg	1	0.025	03/06/0
X0163	XG.2001.273-5	56-23-5	Carbon tetrachloride	ND	mg / Kg	1	0.005	03/06/0
X0163	XG.2001.273-5	108-90-7	Chlorobenzene	ND	mg / Kg	1	0.005	03/06/0
X0163	XG.2001.273-5	124-48-1	Chlorodibromomethane	ND	mg / Kg	1	0.005	03/06/0
X0163	XG.2001.273-5	75-00-3	Chloroethane	ND	mg / Kg	1	0.025	03/06/0
X0163	XG.2001.273-5	67-66-3	Chloroform	ND	mg / Kg	1	0.005	03/06/0
X0163	XG.2001.273-5	74-87-3	Chloromethane	ND	mg / Kg	1	0.025	03/06/0
X0163	XG.2001.273-5	156-59-2	cis-1,2 dichloroethene	ND	mg / Kg	1	0.005	03/06/0
X0163	XG.2001.273-5	10061-01-5	cis-1,3 dichloropropene	ND	mg / Kg	1	0.005	03/06/0
X0163	XG.2001.273-5	74-95-3	Dibromomethane	ND	mg / Kg	1	0.005	03/06/0
X0163	XG.2001.273-5	97-63-2	Ethyl methacrylate	ND	mg / Kg	1	0.025	03/06/0
X0163	XG.2001.273-5	100-41-4	Ethylbenzene	ND	mg / Kg	1	0.005	03/06/01
X0163	XG.2001.273-5		Freon 113	ND	mg / Kg	1	0.025	03/06
X0163	XG.2001.273-5	75-71-8	Freon 12	ND	mg / Kg	1	0.05	03/06/0
X0163	XG.2001.273-5	74-88-4	Iodomethane	ND	mg / Kg	1	0.025	03/06/01
X0163	XG.2001.273-5	1634-04-4	Methyl t-butyl ether (MTBE)	ND	mg / Kg	1	0.005	03/06/01
X0163	XG.2001.273-5	75-09-2	Methylene chloride	ND	mg / Kg	1	0.05	03/06/01
X0163	XG.2001.273-5	91-20-3	Naphthalene	ND	mg / Kg	1	0.025	03/06/01
X0163	XG.2001.273-5	95-47-6	o-Xylene	ND	mg / Kg	1	0.005	03/06/01
X0163	XG.2001.273-5	108-38-3/106-42	p/m Xylenes	ND	mg / Kg	1	0.01	03/06/01
X0163	XG.2001.273-5	100-42-5	Styrene	ND	mg / Kg	1	0.005	03/06/01
X0163	XG.2001.273-5	156-60-5	t-1,2 Dichloroethene	ND	mg / Kg	1	0.005	03/06/01
X0163	XG.2001.273-5	10061-02-6	t-1,3 Dichloropropene	ND	mg / Kg	1	0.005	03/06/01
X0163	XG.2001.273-5	127-18-4	Tetrachloroethene	ND	mg / Kg	1	0.005	03/06/01
X0163	XG.2001.273-5	108-88-3	Toluene	ND	mg / Kg	1	0.005	03/06/01
X0163	XG.2001.273-5	79-01-6	Trichloroethene	ND	mg / Kg	1	0.005	03/06/01
X0163	XG.2001.273-5	75-69-4	Trichlorofluoromethane	ND	mg / Kg	1	0.025	03/06/01
X0163	XG.2001.273-5	108-05-4	Vinyl acetate	ND	mg / Kg	1	0.025	03/06/01
X0163	XG.2001.273-5	75-01-4	Vinyl chloride	ND	mg / Kg	1	0.025	03/06/01

**** Sample specific Detection Limit is determined by multiplying the sample Dilution Factor by the listed Reporting Detection Limit. ****

**** ND = Not detected: less than the sample specific Detection Limit. Results relate only to the items tested. ****

Assaigai Analytical Laboratories, Inc.

Quality Control Summary

Explanation of codes

D *Not applicable due to sample dilution*
L *Not applicable due to MDL proximity*

nt: CH2MHILL
Project: 0102298 160660.02.FF.SA

QC Type **LCS: Lab Control Spike** QC Matrix **SOLID**

QC Group	Run Sequence	CAS #	Analyte	Result	Units	Dilution Factor	Detection Limit	Code	Run Date
X0148-002		**SW846 ME/8015A Diesel Range Organics by GC/FID**							
X0148	XG.2001.169-2		Diesel Range Organics	90	% Recovery	1	NA		02/07/01
X0163-002		**SW846 8260A Purgeable VOCs by GC/MS**							
X0163	XG.2001.240-2	75-34-3	1,1 Dichloroethene	112	% Recovery	1	NA		02/21/01
X0163	XG.2001.240-2	106-46-7	1,4 Dichlorobenzene	103	% Recovery	1	NA		02/21/01
X0163	XG.2001.240-2	71-43-2	Benzene	112	% Recovery	1	NA		02/21/01
X0163	XG.2001.240-2	108-90-7	Chlorobenzene	108	% Recovery	1	NA		02/21/01
X0163	XG.2001.240-2	108-88-3	Toluene	114	% Recovery	1	NA		02/21/01
X0163	XG.2001.240-2	79-01-6	Trichloroethene	106	% Recovery	1	NA		02/21/01

QC Type **LCSD: Lab Control Spike Duplicate Accuracy** QC Matrix **SOLID**

QC Group	Run Sequence	CAS #	Analyte	Result	Units	Dilution Factor	Detection Limit	Code	Run Date
18-003		**SW846 ME/8015A Diesel Range Organics by GC/FID**							
148	XG.2001.169-3		Diesel Range Organics	91	% Recovery	1	NA		02/07/01
X0150-003		**SW846 5030A/8015A GRO by GC/FID**							
X0150	XG.2001.174-3		Gasoline Range Organics	92	% Recovery	1	NA		02/07/01
X0163-003		**SW846 8260A Purgeable VOCs by GC/MS**							
X0163	XG.2001.240-3	75-34-3	1,1 Dichloroethene	106	% Recovery	1	NA		02/21/01
X0163	XG.2001.240-3	106-46-7	1,4 Dichlorobenzene	102	% Recovery	1	NA		02/21/01
X0163	XG.2001.240-3	71-43-2	Benzene	108	% Recovery	1	NA		02/21/01
X0163	XG.2001.240-3	108-90-7	Chlorobenzene	104	% Recovery	1	NA		02/21/01
X0163	XG.2001.240-3	108-88-3	Toluene	111	% Recovery	1	NA		02/21/01
X0163	XG.2001.240-3	79-01-6	Trichloroethene	102	% Recovery	1	NA		02/21/01

QC Type **LCSD: Lab Control Spike Duplicate Precision** QC Matrix **SOLID**

QC Group	Run Sequence	CAS #	Analyte	Result	Units	Dilution Factor	Detection Limit	Code	Run Date
X0148-003		**SW846 ME/8015A Diesel Range Organics by GC/FID**							
X0148	XG.2001.169-3		Diesel Range Organics	1	RPD	1	NA		02/07/01
X0150-003		**SW846 5030A/8015A GRO by GC/FID**							
X0150	XG.2001.174-3		Gasoline Range Organics	7	RPD	1	NA		02/07/01
X0163-003		**SW846 8260A Purgeable VOCs by GC/MS**							
X0163	XG.2001.240-3	75-34-3	1,1 Dichloroethene	5	RPD	1	NA		02/21/01
63	XG.2001.240-3	106-46-7	1,4 Dichlorobenzene	1	RPD	1	NA		02/21/01
X0163	XG.2001.240-3	71-43-2	Benzene	3	RPD	1	NA		02/21/01

Client: CH2MHILL

Project: 0102298 160660.02.FF.SA

Explanation of codes

D *Not applicable due to sample dilu*

L *Not applicable due to MDL proximi*

X0163	XG.2001.240-3	108-90-7	Chlorobenzene	3	RPD	1	NA	02/21/01
X0163	XG.2001.240-3	108-88-3	Toluene	3	RPD	1	NA	02/21/01
X0163	XG.2001.240-3	79-01-6	Trichloroethene	4	RPD	1	NA	02/21/01

QC Type **MB: Method Blank** QC Matrix **SOLID**

QC Group	Run Sequence	CAS #	Analyte	Result	Units	Dilution Factor	Detection Limit	Code	Run Date
X0148-001		**SW846 ME/8015A Diesel Range Organics by GC/FID**							
X0148	XG.2001.169-1		Diesel Range Organics	ND	mg / Kg	1	25		02/07/01
X0148-008		**SW846 ME/8015A Diesel Range Organics by GC/FID**							
X0148	XG.2001.175-1		Diesel Range Organics	ND	mg / Kg	1	25		02/08/01
X0148-011		**SW846 ME/8015A Diesel Range Organics by GC/FID**							
X0148	XG.2001.182-1		Diesel Range Organics	ND	mg / Kg	1	25		02/09/01
X0148-013		**SW846 ME/8015A Diesel Range Organics by GC/FID**							
X0148	XG.2001.194-1		Diesel Range Organics	ND	mg / Kg	1	25		02/14/01
X0148-017		**SW846 ME/8015A Diesel Range Organics by GC/FID**							
X0148	XG.2001.213-1		Diesel Range Organics	ND	mg / Kg	1	25		02/21/01
X0148-025		**SW846 ME/8015A Diesel Range Organics by GC/FID**							
X0148	XG.2001.239-1		Diesel Range Organics	ND	mg / Kg	1	25		02/2[illegible]
X0148-026		**SW846 ME/8015A Diesel Range Organics by GC/FID**							
X0148	XG.2001.247-1		Diesel Range Organics	ND	mg / Kg	1	25		02/28/01
X0150-001		**SW846 5030A/8015A GRO by GC/FID**							
X0150	XG.2001.174-1		Gasoline Range Organics	ND	mg / Kg	1	0.25		02/07/01
X0150-008		**SW846 5030A/8015A GRO by GC/FID**							
X0150	XG.2001.183-1		Gasoline Range Organics	ND	mg / Kg	1	0.25		02/09/01
X0150-010		**SW846 5030A/8015A GRO by GC/FID**							
X0150	XG.2001.192-1		Gasoline Range Organics	ND	mg / Kg	1	0.25		02/13/01
X0150-014		**SW846 5030A/8015A GRO by GC/FID**							
X0150	XG.2001.214-1		Gasoline Range Organics	ND	mg / Kg	1	0.25		02/21/01
X0150-024		**SW846 5030A/8015A GRO by GC/FID**							
X0150	XG.2001.238-1		Gasoline Range Organics	ND	mg / Kg	1	0.25		02/27/01
X0150-027		**SW846 5030A/8015A GRO by GC/FID**							
X0150	XG.2001.246-1		Gasoline Range Organics	ND	mg / Kg	1	0.25		02/28/01
X0163-001		**SW846 8260A Purgeable VOCs by GC/MS**							
X0163	XG.2001.240-1	75-34-3	1,1 Dichloroethane	ND	mg / Kg	1	0.005		02/21/01
X0163	XG.2001.240-1	75-34-3	1,1 Dichloroethene	ND	mg / Kg	1	0.005		02/21/01
X0163	XG.2001.240-1	71-55-6	1,1,1 Trichloroethane	ND	mg / Kg	1	0.005		02/21/01
X0163	XG.2001.240-1	630-20-6	1,1,1,2 Tetrachloroethane	ND	mg / Kg	1	0.005		02/21/01
X0163	XG.2001.240-1	79-00-5	1,1,2 Trichloroethane	ND	mg / Kg	1	0.005		02/21/01
X0163	XG.2001.240-1	79-34-5	1,1,2,2 Tetrachloroethane	ND	mg / Kg	1	0.005		02/21/01
X0163	XG.2001.240-1	106-93-4	1,2 Dibromoethane (EDB)	ND	mg / Kg	1	0.005		02/21/01

Quality Control Summary

Explanation of codes

D *Not applicable due to sample dilution*
L *Not applicable due to MDL proximity*

nt: **CH2MHILL**
ject: **0102298** **160660.02.FF.SA**

X0163	XG.2001.240-1	95-50-1	1,2 Dichlorobenzene	ND	mg / Kg	1	0.005	02/21/01
X0163	XG.2001.240-1	107-06-2	1,2 Dichloroethane	ND	mg / Kg	1	0.005	02/21/01
X0163	XG.2001.240-1	78-87-5	1,2 Dichloropropane	ND	mg / Kg	1	0.005	02/21/01
X0163	XG.2001.240-1	96-18-4	1,2,3 Trichloropropane	ND	mg / Kg	1	0.005	02/21/01
X0163	XG.2001.240-1	95-63-6	1,2,4-Trimethylbenzene	ND	mg / Kg	1	0.005	02/21/01
X0163	XG.2001.240-1	541-73-1	1,3 Dichlorobenzene	ND	mg / Kg	1	0.005	02/21/01
X0163	XG.2001.240-1	108-67-8	1,3,5-Trimethylbenzene	ND	mg / Kg	1	0.005	02/21/01
X0163	XG.2001.240-1	764-41-0	1,4 Dichloro-2-butene	ND	mg / Kg	1	0.05	02/21/01
X0163	XG.2001.240-1	106-46-7	1,4 Dichlorobenzene	ND	mg / Kg	1	0.005	02/21/01
X0163	XG.2001.240-1	78-93-3	2-Butanone (MEK)	ND	mg / Kg	1	0.025	02/21/01
X0163	XG.2001.240-1	110-75-8	2-Chloroethylvinylether	ND	mg / Kg	1	0.025	02/21/01
X0163	XG.2001.240-1	591-78-6	2-Hexanone (MBK)	ND	mg / Kg	1	0.025	02/21/01
X0163	XG.2001.240-1	108-10-1	4-Methyl-2-pentanone (MIBK)	ND	mg / Kg	1	0.025	02/21/01
X0163	XG.2001.240-1	67-64-1	Acetone	ND	mg / Kg	1	0.05	02/21/01
X0163	XG.2001.240-1	107-02-8	Acrolein	ND	mg / Kg	1	0.1	02/21/01
X0163	XG.2001.240-1	107-13-1	Acrylonitrile	ND	mg / Kg	1	0.1	02/21/01
X0163	XG.2001.240-1	71-43-2	Benzene	ND	mg / Kg	1	0.005	02/21/01
X0163	XG.2001.240-1	75-27-4	Bromodichloromethane	ND	mg / Kg	1	0.005	02/21/01
X0163	XG.2001.240-1	75-25-2	Bromoform	ND	mg / Kg	1	0.005	02/21/01
X0163	XG.2001.240-1	74-83-9	Bromomethane	ND	mg / Kg	1	0.025	02/21/01
X0163	XG.2001.240-1	75-15-0	Carbon disulfide	ND	mg / Kg	1	0.025	02/21/01
X0163	XG.2001.240-1	56-23-5	Carbon tetrachloride	ND	mg / Kg	1	0.005	02/21/01
X0163	XG.2001.240-1	108-90-7	Chlorobenzene	ND	mg / Kg	1	0.005	02/21/01
3	XG.2001.240-1	124-48-1	Chlorodibromomethane	ND	mg / Kg	1	0.005	02/21/01
X0163	XG.2001.240-1	75-00-3	Chloroethane	ND	mg / Kg	1	0.025	02/21/01
X0163	XG.2001.240-1	67-66-3	Chloroform	ND	mg / Kg	1	0.005	02/21/01
X0163	XG.2001.240-1	74-87-3	Chloromethane	ND	mg / Kg	1	0.025	02/21/01
X0163	XG.2001.240-1	156-59-2	cis-1,2 dichloroethene	ND	mg / Kg	1	0.005	02/21/01
X0163	XG.2001.240-1	10061-01-5	cis-1,3 dichloropropene	ND	mg / Kg	1	0.005	02/21/01
X0163	XG.2001.240-1	74-95-3	Dibromomethane	ND	mg / Kg	1	0.005	02/21/01
X0163	XG.2001.240-1	97-63-2	Ethyl methacrylate	ND	mg / Kg	1	0.025	02/21/01
X0163	XG.2001.240-1	100-41-4	Ethylbenzene	ND	mg / Kg	1	0.005	02/21/01
X0163	XG.2001.240-1		Freon 113	ND	mg / Kg	1	0.025	02/21/01
X0163	XG.2001.240-1	75-71-8	Freon 12	ND	mg / Kg	1	0.05	02/21/01
X0163	XG.2001.240-1	74-88-4	Iodomethane	ND	mg / Kg	1	0.025	02/21/01
X0163	XG.2001.240-1	1634-04-4	Methyl t-butyl ether (MTBE)	ND	mg / Kg	1	0.005	02/21/01
X0163	XG.2001.240-1	75-09-2	Methylene chloride	ND	mg / Kg	1	0.05	02/21/01
X0163	XG.2001.240-1	91-20-3	Naphthalene	ND	mg / Kg	1	0.025	02/21/01
X0163	XG.2001.240-1	95-47-6	o-Xylene	ND	mg / Kg	1	0.005	02/21/01
X0163	XG.2001.240-1	108-38-3/106-42	p/m Xylenes	ND	mg / Kg	1	0.01	02/21/01
X0163	XG.2001.240-1	100-42-5	Styrene	ND	mg / Kg	1	0.005	02/21/01
X0163	XG.2001.240-1	156-60-5	t-1,2 Dichloroethene	ND	mg / Kg	1	0.005	02/21/01
X0163	XG.2001.240-1	10061-02-6	t-1,3 Dichloropropene	ND	mg / Kg	1	0.005	02/21/01
X0163	XG.2001.240-1	127-18-4	Tetrachloroethene	ND	mg / Kg	1	0.005	02/21/01
X0163	XG.2001.240-1	108-88-3	Toluene	ND	mg / Kg	1	0.005	02/21/01
X0163	XG.2001.240-1	79-01-6	Trichloroethene	ND	mg / Kg	1	0.005	02/21/01
X0163	XG.2001.240-1	75-69-4	Trichlorofluoromethane	ND	mg / Kg	1	0.025	02/21/01
X0163	XG.2001.240-1	108-05-4	Vinyl acetate	ND	mg / Kg	1	0.025	02/21/01
3	XG.2001.240-1	75-01-4	Vinyl chloride	ND	mg / Kg	1	0.025	02/21/01

Quality Control Summary

Explanation of codes

D *Not applicable due to sample dilu*

L *Not applicable due to MDL proximit*

Client: **CH2MHILL**

Project: **0102298** **160660.02.FF.SA**

X0163-008 **SW846 8260A Purgeable VOCs by GC/MS**

X0163	XG.2001.240-8	75-34-3	1,1 Dichloroethane	ND	mg / Kg	1	0.005	02/22/01
X0163	XG.2001.240-8	75-34-3	1,1 Dichloroethene	ND	mg / Kg	1	0.005	02/22/01
X0163	XG.2001.240-8	71-55-6	1,1,1 Trichloroethane	ND	mg / Kg	1	0.005	02/22/01
X0163	XG.2001.240-8	630-20-6	1,1,1,2 Tetrachloroethane	ND	mg / Kg	1	0.005	02/22/01
X0163	XG.2001.240-8	79-00-5	1,1,2 Trichloroethane	ND	mg / Kg	1	0.005	02/22/01
X0163	XG.2001.240-8	79-34-5	1,1,2,2 Tetrachloroethane	ND	mg / Kg	1	0.005	02/22/01
X0163	XG.2001.240-8	106-93-4	1,2 Dibromoethane (EDB)	ND	mg / Kg	1	0.005	02/22/01
X0163	XG.2001.240-8	95-50-1	1,2 Dichlorobenzene	ND	mg / Kg	1	0.005	02/22/01
X0163	XG.2001.240-8	107-06-2	1,2 Dichloroethane	ND	mg / Kg	1	0.005	02/22/01
X0163	XG.2001.240-8	78-87-5	1,2 Dichloropropane	ND	mg / Kg	1	0.005	02/22/01
X0163	XG.2001.240-8	96-18-4	1,2,3 Trichloropropane	ND	mg / Kg	1	0.005	02/22/01
X0163	XG.2001.240-8	95-63-6	1,2,4-Trimethylbenzene	ND	mg / Kg	1	0.005	02/22/01
X0163	XG.2001.240-8	541-73-1	1,3 Dichlorobenzene	ND	mg / Kg	1	0.005	02/22/01
X0163	XG.2001.240-8	108-67-8	1,3,5-Trimethylbenzene	ND	mg / Kg	1	0.005	02/22/01
X0163	XG.2001.240-8	764-41-0	1,4 Dichloro-2-butene	ND	mg / Kg	1	0.05	02/22/01
X0163	XG.2001.240-8	106-46-7	1,4 Dichlorobenzene	ND	mg / Kg	1	0.005	02/22/01
X0163	XG.2001.240-8	78-93-3	2-Butanone (MEK)	ND	mg / Kg	1	0.025	02/22/01
X0163	XG.2001.240-8	110-75-8	2-Chloroethylvinylether	ND	mg / Kg	1	0.025	02/22/01
X0163	XG.2001.240-8	591-78-6	2-Hexanone (MBK)	ND	mg / Kg	1	0.025	02/22/01
X0163	XG.2001.240-8	108-10-1	4-Methyl-2-pentanone (MIBK)	ND	mg / Kg	1	0.025	02/22/01
X0163	XG.2001.240-8	67-64-1	Acetone	ND	mg / Kg	1	0.05	02/22/01
X0163	XG.2001.240-8	107-02-8	Acrolein	ND	mg / Kg	1	0.1	02/22/
X0163	XG.2001.240-8	107-13-1	Acrylonitrile	ND	mg / Kg	1	0.1	02/22/
X0163	XG.2001.240-8	71-43-2	Benzene	ND	mg / Kg	1	0.005	02/22/0
X0163	XG.2001.240-8	75-27-4	Bromodichloromethane	ND	mg / Kg	1	0.005	02/22/0
X0163	XG.2001.240-8	75-25-2	Bromoform	ND	mg / Kg	1	0.005	02/22/0
X0163	XG.2001.240-8	74-83-9	Bromomethane	ND	mg / Kg	1	0.025	02/22/0
X0163	XG.2001.240-8	75-15-0	Carbon disulfide	ND	mg / Kg	1	0.025	02/22/0
X0163	XG.2001.240-8	56-23-5	Carbon tetrachloride	ND	mg / Kg	1	0.005	02/22/0
X0163	XG.2001.240-8	108-90-7	Chlorobenzene	ND	mg / Kg	1	0.005	02/22/0
X0163	XG.2001.240-8	124-48-1	Chlorodibromomethane	ND	mg / Kg	1	0.005	02/22/0
X0163	XG.2001.240-8	75-00-3	Chloroethane	ND	mg / Kg	1	0.025	02/22/0
X0163	XG.2001.240-8	67-66-3	Chloroform	ND	mg / Kg	1	0.005	02/22/0
X0163	XG.2001.240-8	74-87-3	Chloromethane	ND	mg / Kg	1	0.025	02/22/0
X0163	XG.2001.240-8	156-59-2	cis-1,2 dichloroethene	ND	mg / Kg	1	0.005	02/22/01
X0163	XG.2001.240-8	10061-01-5	cis-1,3 dichloropropene	ND	mg / Kg	1	0.005	02/22/01
X0163	XG.2001.240-8	74-95-3	Dibromomethane	ND	mg / Kg	1	0.005	02/22/01
X0163	XG.2001.240-8	97-63-2	Ethyl methacrylate	ND	mg / Kg	1	0.025	02/22/01
X0163	XG.2001.240-8	100-41-4	Ethylbenzene	ND	mg / Kg	1	0.005	02/22/01
X0163	XG.2001.240-8		Freon 113	ND	mg / Kg	1	0.025	02/22/01
X0163	XG.2001.240-8	75-71-8	Freon 12	ND	mg / Kg	1	0.05	02/22/01
X0163	XG.2001.240-8	74-88-4	Iodomethane	ND	mg / Kg	1	0.025	02/22/01
X0163	XG.2001.240-8	1634-04-4	Methyl t-butyl ether (MTBE)	ND	mg / Kg	1	0.005	02/22/01
X0163	XG.2001.240-8	75-09-2	Methylene chloride	ND	mg / Kg	1	0.05	02/22/01
X0163	XG.2001.240-8	91-20-3	Naphthalene	ND	mg / Kg	1	0.025	02/22/01
X0163	XG.2001.240-8	95-47-6	o-Xylene	ND	mg / Kg	1	0.005	02/22/01
X0163	XG.2001.240-8	108-38-3/106-42	p/m Xylenes	ND	mg / Kg	1	0.01	02/22/01
X0163	XG.2001.240-8	100-42-5	Styrene	ND	mg / Kg	1	0.005	02/22

RECEIVED

t: CH2MHILL

Project: 0102298 160660.02.FF.SA

Explanation of codes

D *Not applicable due to sample dilution*

L *Not applicable due to MDL proximity*

X0163	XG.2001.240-8	156-60-5	t-1,2 Dichloroethene	ND	mg / Kg	1	0.005	02/22/01
X0163	XG 2001.240-8	10061-02-6	t-1,3 Dichloropropene	ND	mg / Kg	1	0.005	02/22/01
X0163	XG 2001.240-8	127-18-4	Tetrachloroethene	ND	mg / Kg	1	0.005	02/22/01
X0163	XG 2001.240-8	108-88-3	Toluene	ND	mg / Kg	1	0.005	02/22/01
X0163	XG.2001.240-8	79-01-6	Trichloroethene	ND	mg / Kg	1	0.005	02/22/01
X0163	XG.2001.240-8	75-69-4	Trichlorofluoromethane	ND	mg / Kg	1	0.025	02/22/01
X0163	XG.2001.240-8	108-05-4	Vinyl acetate	ND	mg / Kg	1	0.025	02/22/01
X0163	XG 2001.240-8	75-01-4	Vinyl chloride	ND	mg / Kg	1	0.025	02/22/01
X0163-017		**SW846 8260A Purgeable VOCs by GC/MS**						
X0163	XG.2001.240-16	75-34-3	1,1 Dichloroethane	ND	mg / Kg	1	0.005	02/23/01
X0163	XG.2001.240-16	75-34-3	1,1 Dichloroethene	ND	mg / Kg	1	0.005	02/23/01
X0163	XG 2001.240-16	71-55-6	1,1,1 Trichloroethane	ND	mg / Kg	1	0.005	02/23/01
X0163	XG.2001.240-16	630-20-6	1,1,1,2 Tetrachloroethane	ND	mg / Kg	1	0.005	02/23/01
X0163	XG.2001.240-16	79-00-5	1,1,2 Trichloroethane	ND	mg / Kg	1	0.005	02/23/01
X0163	XG.2001.240-16	79-34-5	1,1,2,2 Tetrachloroethane	ND	mg / Kg	1	0.005	02/23/01
X0163	XG.2001.240-16	106-93-4	1,2 Dibromoethane (EDB)	ND	mg / Kg	1	0.005	02/23/01
X0163	XG.2001.240-16	95-50-1	1,2 Dichlorobenzene	ND	mg / Kg	1	0.005	02/23/01
X0163	XG.2001.240-16	107-06-2	1,2 Dichloroethane	ND	mg / Kg	1	0.005	02/23/01
X0163	XG.2001.240-16	78-87-5	1,2 Dichloropropane	ND	mg / Kg	1	0.005	02/23/01
X0163	XG.2001.240-16	96-18-4	1,2,3 Trichloropropane	ND	mg / Kg	1	0.005	02/23/01
X0163	XG.2001.240-16	95-63-6	1,2,4-Trimethylbenzene	ND	mg / Kg	1	0.005	02/23/01
X0163	XG.2001.240-16	541-73-1	1,3 Dichlorobenzene	ND	mg / Kg	1	0.005	02/23/01
	XG.2001.240-16	108-67-8	1,3,5-Trimethylbenzene	ND	mg / Kg	1	0.005	02/23/01
[illegible]	XG.2001.240-16	764-41-0	1,4 Dichloro-2-butene	ND	mg / Kg	1	0.05	02/23/01
X0163	XG.2001.240-16	106-46-7	1,4 Dichlorobenzene	ND	mg / Kg	1	0.005	02/23/01
X0163	XG.2001.240-16	78-93-3	2-Butanone (MEK)	ND	mg / Kg	1	0.025	02/23/01
X0163	XG.2001.240-16	110-75-8	2-Chloroethylvinylether	ND	mg / Kg	1	0.025	02/23/01
X0163	XG.2001.240-16	591-78-6	2-Hexanone (MBK)	ND	mg / Kg	1	0.025	02/23/01
X0163	XG 2001.240-16	108-10-1	4-Methyl-2-pentanone (MIBK)	ND	mg / Kg	1	0.025	02/23/01
X0163	XG.2001.240-16	67-64-1	Acetone	ND	mg / Kg	1	0.05	02/23/01
X0163	XG.2001.240-16	107-02-8	Acrolein	ND	mg / Kg	1	0.1	02/23/01
X0163	XG.2001.240-16	107-13-1	Acrylonitrile	ND	mg / Kg	1	0.1	02/23/01
X0163	XG.2001.240-16	71-43-2	Benzene	ND	mg / Kg	1	0.005	02/23/01
X0163	XG.2001.240-16	75-27-4	Bromodichloromethane	ND	mg / Kg	1	0.005	02/23/01
X0163	XG.2001.240-16	75-25-2	Bromoform	ND	mg / Kg	1	0.005	02/23/01
X0163	XG.2001.240-16	74-83-9	Bromomethane	ND	mg / Kg	1	0.025	02/23/01
X0163	XG.2001.240-16	75-15-0	Carbon disulfide	ND	mg / Kg	1	0.025	02/23/01
X0163	XG.2001.240-16	56-23-5	Carbon tetrachloride	ND	mg / Kg	1	0.005	02/23/01
X0163	XG.2001.240-16	108-90-7	Chlorobenzene	ND	mg / Kg	1	0.005	02/23/01
X0163	XG 2001.240-16	124-48-1	Chlorodibromomethane	ND	mg / Kg	1	0.005	02/23/01
X0163	XG.2001.240-16	75-00-3	Chloroethane	ND	mg / Kg	1	0.025	02/23/01
X0163	XG.2001.240-16	67-66-3	Chloroform	ND	mg / Kg	1	0.005	02/23/01
X0163	XG.2001.240-16	74-87-3	Chloromethane	ND	mg / Kg	1	0.025	02/23/01
X0163	XG.2001.240-16	156-59-2	cis-1,2 dichloroethene	ND	mg / Kg	1	0.005	02/23/01
X0163	XG 2001.240-16	10061-01-5	cis-1,3 dichloropropene	ND	mg / Kg	1	0.005	02/23/01
X0163	XG 2001.240-16	74-95-3	Dibromomethane	ND	mg / Kg	1	0.005	02/23/01
X0163	XG 2001.240-16	97-63-2	Ethyl methacrylate	ND	mg / Kg	1	0.025	02/23/01
X0163	XG 2001.240-16	100-41-4	Ethylbenzene	ND	mg / Kg	1	0.005	02/23/01
[illegible]	XG 2001.240-16		Freon 113	ND	mg / Kg	1	0.025	02/23/01
X0163	XG 2001.240-16	75-71-8	Freon 12	ND	mg / Kg	1	0.05	02/23/01

RECEIVED MAR 1 0 2001

Quality Control Summary

Client: **CH2MHILL**

Project: **0102298** **160660.02.FF.SA**

Explanation of codes

D *Not applicable due to sample dilu*

L *Not applicable due to MDL proximi*

X0163	XG.2001.240-16	74-88-4	Iodomethane	ND	mg / Kg	1	0.025	02/23/01
X0163	XG.2001.240-16	1634-04-4	Methyl t-butyl ether (MTBE)	ND	mg / Kg	1	0.005	02/23/01
X0163	XG.2001.240-16	75-09-2	Methylene chloride	ND	mg / Kg	1	0.05	02/23/01
X0163	XG.2001.240-16	91-20-3	Naphthalene	ND	mg / Kg	1	0.025	02/23/01
X0163	XG.2001.240-16	95-47-6	o-Xylene	ND	mg / Kg	1	0.005	02/23/01
X0163	XG.2001.240-16	108-38-3/106-42	p/m Xylenes	ND	mg / Kg	1	0.01	02/23/01
X0163	XG.2001.240-16	100-42-5	Styrene	ND	mg / Kg	1	0.005	02/23/01
X0163	XG.2001.240-16	156-60-5	t-1,2 Dichloroethene	ND	mg / Kg	1	0.005	02/23/01
X0163	XG.2001.240-16	10061-02-6	t-1,3 Dichloropropene	ND	mg / Kg	1	0.005	02/23/01
X0163	XG.2001.240-16	127-18-4	Tetrachloroethene	ND	mg / Kg	1	0.005	02/23/01
X0163	XG.2001.240-16	108-88-3	Toluene	ND	mg / Kg	1	0.005	02/23/01
X0163	XG.2001.240-16	79-01-6	Trichloroethene	ND	mg / Kg	1	0.005	02/23/01
X0163	XG.2001.240-16	75-69-4	Trichlorofluoromethane	ND	mg / Kg	1	0.025	02/23/01
X0163	XG.2001.240-16	108-05-4	Vinyl acetate	ND	mg / Kg	1	0.025	02/23/01
X0163	XG.2001.240-16	75-01-4	Vinyl chloride	ND	mg / Kg	1	0.025	02/23/01
X0163-034		**SW846 8260A Purgeable VOCs by GC/MS**						
X0163	XG.2001.240-26	75-34-3	1,1 Dichloroethane	ND	mg / Kg	1	0.005	02/26/01
X0163	XG.2001.240-26	75-34-3	1,1 Dichloroethene	ND	mg / Kg	1	0.005	02/26/01
X0163	XG.2001.240-26	71-55-6	1,1,1 Trichloroethane	ND	mg / Kg	1	0.005	02/26/01
X0163	XG.2001.240-26	630-20-6	1,1,1,2 Tetrachloroethane	ND	mg / Kg	1	0.005	02/26/01
X0163	XG.2001.240-26	79-00-5	1,1,2 Trichloroethane	ND	mg / Kg	1	0.005	02/26/01
X0163	XG.2001.240-26	79-34-5	1,1,2,2 Tetrachloroethane	ND	mg / Kg	1	0.005	02/26/01
X0163	XG.2001.240-26	106-93-4	1,2 Dibromoethane (EDB)	ND	mg / Kg	1	0.005	02/26
X0163	XG.2001.240-26	95-50-1	1,2 Dichlorobenzene	ND	mg / Kg	1	0.005	02/26/01
X0163	XG.2001.240-26	107-06-2	1,2 Dichloroethane	ND	mg / Kg	1	0.005	02/26/01
X0163	XG.2001.240-26	78-87-5	1,2 Dichloropropane	ND	mg / Kg	1	0.005	02/26/01
X0163	XG.2001.240-26	96-18-4	1,2,3 Trichloropropane	ND	mg / Kg	1	0.005	02/26/01
X0163	XG.2001.240-26	95-63-6	1,2,4-Trimethylbenzene	ND	mg / Kg	1	0.005	02/26/01
X0163	XG.2001.240-26	541-73-1	1,3 Dichlorobenzene	ND	mg / Kg	1	0.005	02/26/01
X0163	XG.2001.240-26	108-67-8	1,3,5-Trimethylbenzene	ND	mg / Kg	1	0.005	02/26/01
X0163	XG.2001.240-26	764-41-0	1,4 Dichloro-2-butene	ND	mg / Kg	1	0.05	02/26/01
X0163	XG.2001.240-26	106-46-7	1,4 Dichlorobenzene	ND	mg / Kg	1	0.005	02/26/01
X0163	XG.2001.240-26	78-93-3	2-Butanone (MEK)	ND	mg / Kg	1	0.025	02/26/01
X0163	XG.2001.240-26	110-75-8	2-Chloroethylvinylether	ND	mg / Kg	1	0.025	02/26/01
X0163	XG.2001.240-26	591-78-6	2-Hexanone (MBK)	ND	mg / Kg	1	0.025	02/26/01
X0163	XG.2001.240-26	108-10-1	4-Methyl-2-pentanone (MIBK)	ND	mg / Kg	1	0.025	02/26/01
X0163	XG.2001.240-26	67-64-1	Acetone	ND	mg / Kg	1	0.05	02/26/01
X0163	XG.2001.240-26	107-02-8	Acrolein	ND	mg / Kg	1	0.1	02/26/01
X0163	XG.2001.240-26	107-13-1	Acrylonitrile	ND	mg / Kg	1	0.1	02/26/01
X0163	XG.2001.240-26	71-43-2	Benzene	ND	mg / Kg	1	0.005	02/26/01
X0163	XG.2001.240-26	75-27-4	Bromodichloromethane	ND	mg / Kg	1	0.005	02/26/01
X0163	XG.2001.240-26	75-25-2	Bromoform	ND	mg / Kg	1	0.005	02/26/01
X0163	XG.2001.240-26	74-83-9	Bromomethane	ND	mg / Kg	1	0.025	02/26/01
X0163	XG.2001.240-26	75-15-0	Carbon disulfide	ND	mg / Kg	1	0.025	02/26/01
X0163	XG.2001.240-26	56-23-5	Carbon tetrachloride	ND	mg / Kg	1	0.005	02/26/01
X0163	XG.2001.240-26	108-90-7	Chlorobenzene	ND	mg / Kg	1	0.005	02/26/01
X0163	XG.2001.240-26	124-48-1	Chlorodibromomethane	ND	mg / Kg	1	0.005	02/26/01
X0163	XG.2001.240-26	75-00-3	Chloroethane	ND	mg / Kg	1	0.025	02/26/01
X0163	XG.2001.240-26	67-66-3	Chloroform	ND	mg / Kg	1	0.005	02/26/01

Quality Control Summary

Explanation of codes

D *Not applicable due to sample dilution*
L *Not applicable due to MDL proximity*

Client: CH2MHILL
Project: 0102298 160660.02.FF.SA

X0163	XG.2001.240-26	74-87-3	Chloromethane	ND	mg / Kg	1	0.025	02/26/01
X0163	XG.2001.240-26	156-59-2	cis-1,2 dichloroethene	ND	mg / Kg	1	0.005	02/26/01
X0163	XG.2001.240-26	10061-01-5	cis-1,3 dichloropropene	ND	mg / Kg	1	0.005	02/26/01
X0163	XG.2001.240-26	74-95-3	Dibromomethane	ND	mg / Kg	1	0.005	02/26/01
X0163	XG.2001.240-26	97-63-2	Ethyl methacrylate	ND	mg / Kg	1	0.025	02/26/01
X0163	XG.2001.240-26	100-41-4	Ethylbenzene	ND	mg / Kg	1	0.005	02/26/01
X0163	XG.2001.240-26		Freon 113	ND	mg / Kg	1	0.025	02/26/01
X0163	XG.2001.240-26	75-71-8	Freon 12	ND	mg / Kg	1	0.05	02/26/01
X0163	XG.2001.240-26	74-88-4	Iodomethane	ND	mg / Kg	1	0.025	02/26/01
X0163	XG.2001.240-26	1634-04-4	Methyl t-butyl ether (MTBE)	ND	mg / Kg	1	0.005	02/26/01
X0163	XG.2001.240-26	75-09-2	Methylene chloride	ND	mg / Kg	1	0.05	02/26/01
X0163	XG.2001.240-26	91-20-3	Naphthalene	ND	mg / Kg	1	0.025	02/26/01
X0163	XG.2001.240-26	95-47-6	o-Xylene	ND	mg / Kg	1	0.005	02/26/01
X0163	XG.2001.240-26	108-38-3/106-42	p/m Xylenes	ND	mg / Kg	1	0.01	02/26/01
X0163	XG.2001.240-26	100-42-5	Styrene	ND	mg / Kg	1	0.005	02/26/01
X0163	XG.2001.240-26	156-60-5	t-1,2 Dichloroethene	ND	mg / Kg	1	0.005	02/26/01
X0163	XG.2001.240-26	10061-02-6	t-1,3 Dichloropropene	ND	mg / Kg	1	0.005	02/26/01
X0163	XG.2001.240-26	127-18-4	Tetrachloroethene	ND	mg / Kg	1	0.005	02/26/01
X0163	XG.2001.240-26	108-88-3	Toluene	ND	mg / Kg	1	0.005	02/26/01
X0163	XG.2001.240-26	79-01-6	Trichloroethene	ND	mg / Kg	1	0.005	02/26/01
X0163	XG.2001.240-26	75-69-4	Trichlorofluoromethane	ND	mg / Kg	1	0.025	02/26/01
X0163	XG.2001.240-26	108-05-4	Vinyl acetate	ND	mg / Kg	1	0.025	02/26/01
	XG.2001.240-26	75-01-4	Vinyl chloride	ND	mg / Kg	1	0.025	02/26/01
X0163-035		**SW846 8260A Purgeable VOCs by GC/MS**						
X0163	XG.2001.242-1	75-34-3	1,1 Dichloroethane	ND	mg / Kg	1	0.005	02/27/01
X0163	XG.2001.242-1	75-34-3	1,1 Dichloroethene	ND	mg / Kg	1	0.005	02/27/01
X0163	XG.2001.242-1	71-55-6	1,1,1 Trichloroethane	ND	mg / Kg	1	0.005	02/27/01
X0163	XG.2001.242-1	630-20-6	1,1,1,2 Tetrachloroethane	ND	mg / Kg	1	0.005	02/27/01
X0163	XG.2001.242-1	79-00-5	1,1,2 Trichloroethane	ND	mg / Kg	1	0.005	02/27/01
X0163	XG.2001.242-1	79-34-5	1,1,2,2 Tetrachloroethane	ND	mg / Kg	1	0.005	02/27/01
X0163	XG.2001.242-1	106-93-4	1,2 Dibromoethane (EDB)	ND	mg / Kg	1	0.005	02/27/01
X0163	XG.2001.242-1	95-50-1	1,2 Dichlorobenzene	ND	mg / Kg	1	0.005	02/27/01
X0163	XG.2001.242-1	107-06-2	1,2 Dichloroethane	ND	mg / Kg	1	0.005	02/27/01
X0163	XG.2001.242-1	78-87-5	1,2 Dichloropropane	ND	mg / Kg	1	0.005	02/27/01
X0163	XG.2001.242-1	96-18-4	1,2,3 Trichloropropane	ND	mg / Kg	1	0.005	02/27/01
X0163	XG.2001.242-1	95-63-6	1,2,4-Trimethylbenzene	ND	mg / Kg	1	0.005	02/27/01
X0163	XG.2001.242-1	541-73-1	1,3 Dichlorobenzene	ND	mg / Kg	1	0.005	02/27/01
X0163	XG.2001.242-1	108-67-8	1,3,5-Trimethylbenzene	ND	mg / Kg	1	0.005	02/27/01
X0163	XG.2001.242-1	764-41-0	1,4 Dichloro-2-butene	ND	mg / Kg	1	0.05	02/27/01
X0163	XG.2001.242-1	106-46-7	1,4 Dichlorobenzene	ND	mg / Kg	1	0.005	02/27/01
X0163	XG.2001.242-1	78-93-3	2-Butanone (MEK)	ND	mg / Kg	1	0.025	02/27/01
X0163	XG.2001.242-1	110-75-8	2-Chloroethylvinylether	ND	mg / Kg	1	0.025	02/27/01
X0163	XG.2001.242-1	591-78-6	2-Hexanone (MBK)	ND	mg / Kg	1	0.025	02/27/01
X0163	XG.2001.242-1	108-10-1	4-Methyl-2-pentanone (MIBK)	ND	mg / Kg	1	0.025	02/27/01
X0163	XG.2001.242-1	67-64-1	Acetone	ND	mg / Kg	1	0.05	02/27/01
X0163	XG.2001.242-1	107-02-8	Acrolein	ND	mg / Kg	1	0.1	02/27/01
X0163	XG.2001.242-1	107-13-1	Acrylonitrile	ND	mg / Kg	1	0.1	02/27/01
3	XG.2001.242-1	71-43-2	Benzene	ND	mg / Kg	1	0.005	02/27/01
[illegible]63	XG.2001.242-1	75-27-4	Bromodichloromethane	ND	mg / Kg	1	0.005	02/27/01

Quality Control Summary

Client: **CH2MHILL**

Project: **0102298** **160660.02.FF.SA**

Explanation of codes

D *Not applicable due to sample dilu*

L *Not applicable due to MDL proximity*

X0163	XG.2001.242-1	75-25-2	Bromoform	ND	mg / Kg	1	0.005	02/27/01
X0163	XG.2001.242-1	74-83-9	Bromomethane	ND	mg / Kg	1	0.025	02/27/01
X0163	XG.2001.242-1	75-15-0	Carbon disulfide	ND	mg / Kg	1	0.025	02/27/01
X0163	XG.2001.242-1	56-23-5	Carbon tetrachloride	ND	mg / Kg	1	0.005	02/27/01
X0163	XG.2001.242-1	108-90-7	Chlorobenzene	ND	mg / Kg	1	0.005	02/27/01
X0163	XG.2001.242-1	124-48-1	Chlorodibromomethane	ND	mg / Kg	1	0.005	02/27/01
X0163	XG.2001.242-1	75-00-3	Chloroethane	ND	mg / Kg	1	0.025	02/27/01
X0163	XG.2001.242-1	67-66-3	Chloroform	ND	mg / Kg	1	0.005	02/27/01
X0163	XG.2001.242-1	74-87-3	Chloromethane	ND	mg / Kg	1	0.025	02/27/01
X0163	XG.2001.242-1	156-59-2	cis-1,2 dichloroethene	ND	mg / Kg	1	0.005	02/27/01
X0163	XG.2001.242-1	10061-01-5	cis-1,3 dichloropropene	ND	mg / Kg	1	0.005	02/27/01
X0163	XG.2001.242-1	74-95-3	Dibromomethane	ND	mg / Kg	1	0.005	02/27/01
X0163	XG.2001.242-1	97-63-2	Ethyl methacrylate	ND	mg / Kg	1	0.025	02/27/01
X0163	XG.2001.242-1	100-41-4	Ethylbenzene	ND	mg / Kg	1	0.005	02/27/01
X0163	XG.2001.242-1		Freon 113	ND	mg / Kg	1	0.025	02/27/01
X0163	XG.2001.242-1	75-71-8	Freon 12	ND	mg / Kg	1	0.05	02/27/01
X0163	XG.2001.242-1	74-88-4	Iodomethane	ND	mg / Kg	1	0.025	02/27/01
X0163	XG.2001.242-1	1634-04-4	Methyl t-butyl ether (MTBE)	ND	mg / Kg	1	0.005	02/27/01
X0163	XG.2001.242-1	75-09-2	Methylene chloride	ND	mg / Kg	1	0.05	02/27/01
X0163	XG.2001.242-1	91-20-3	Naphthalene	ND	mg / Kg	1	0.025	02/27/01
X0163	XG.2001.242-1	95-47-6	o-Xylene	ND	mg / Kg	1	0.005	02/27/01
X0163	XG.2001.242-1	108-38-3/106-42	p/m Xylenes	ND	mg / Kg	1	0.01	02/27/01
X0163	XG.2001.242-1	100-42-5	Styrene	ND	mg / Kg	1	0.005	02/27
X0163	XG.2001.242-1	156-60-5	t-1,2 Dichloroethene	ND	mg / Kg	1	0.005	02/27
X0163	XG.2001.242-1	10061-02-6	t-1,3 Dichloropropene	ND	mg / Kg	1	0.005	02/27/0
X0163	XG.2001.242-1	127-18-4	Tetrachloroethene	ND	mg / Kg	1	0.005	02/27/0
X0163	XG.2001.242-1	108-88-3	Toluene	ND	mg / Kg	1	0.005	02/27/0
X0163	XG.2001.242-1	79-01-6	Trichloroethene	ND	mg / Kg	1	0.005	02/27/0
X0163	XG.2001.242-1	75-69-4	Trichlorofluoromethane	ND	mg / Kg	1	0.025	02/27/0
X0163	XG.2001.242-1	108-05-4	Vinyl acetate	ND	mg / Kg	1	0.025	02/27/0
X0163	XG.2001.242-1	75-01-4	Vinyl chloride	ND	mg / Kg	1	0.025	02/27/0
X0163-042		**SW846 8260A Purgeable VOCs by GC/MS**						
X0163	XG.2001.273-1	75-34-3	1,1 Dichloroethane	ND	mg / Kg	1	0.005	03/06/0
X0163	XG.2001.273-1	75-34-3	1,1 Dichloroethene	ND	mg / Kg	1	0.005	03/06/0
X0163	XG.2001.273-1	71-55-6	1,1,1 Trichloroethane	ND	mg / Kg	1	0.005	03/06/0
X0163	XG.2001.273-1	630-20-6	1,1,1,2 Tetrachloroethane	ND	mg / Kg	1	0.005	03/06/01
X0163	XG.2001.273-1	79-00-5	1,1,2 Trichloroethane	ND	mg / Kg	1	0.005	03/06/01
X0163	XG.2001.273-1	79-34-5	1,1,2,2 Tetrachloroethane	ND	mg / Kg	1	0.005	03/06/01
X0163	XG.2001.273-1	106-93-4	1,2 Dibromoethane (EDB)	ND	mg / Kg	1	0.005	03/06/01
X0163	XG.2001.273-1	95-50-1	1,2 Dichlorobenzene	ND	mg / Kg	1	0.005	03/06/01
X0163	XG.2001.273-1	107-06-2	1,2 Dichloroethane	ND	mg / Kg	1	0.005	03/06/01
X0163	XG.2001.273-1	78-87-5	1,2 Dichloropropane	ND	mg / Kg	1	0.005	03/06/01
X0163	XG.2001.273-1	96-18-4	1,2,3 Trichloropropane	ND	mg / Kg	1	0.005	03/06/01
X0163	XG.2001.273-1	95-63-6	1,2,4-Trimethylbenzene	ND	mg / Kg	1	0.005	03/06/01
X0163	XG.2001.273-1	541-73-1	1,3 Dichlorobenzene	ND	mg / Kg	1	0.005	03/06/01
X0163	XG.2001.273-1	108-67-8	1,3,5-Trimethylbenzene	ND	mg / Kg	1	0.005	03/06/01
X0163	XG.2001.273-1	764-41-0	1,4 Dichloro-2-butene	ND	mg / Kg	1	0.05	03/06/01
X0163	XG.2001.273-1	106-46-7	1,4 Dichlorobenzene	ND	mg / Kg	1	0.005	03/06
X0163	XG.2001.273-1	78-93-3	2-Butanone (MEK)	ND	mg / Kg	1	0.025	03/06

Quality Control Summary

Explanation of codes

D *Not applicable due to sample dilution*
L *Not applicable due to MDL proximity*

Client: CH2MHILL
Project: 0102298 160660.02.FF.SA

X0163	XG 2001.273-1	110-75-8	2-Chloroethylvinylether	ND	mg / Kg	1	0.025	03/06/01
X0163	XG 2001.273-1	591-78-6	2-Hexanone (MBK)	ND	mg / Kg	1	0.025	03/06/01
X0163	XG 2001.273-1	108-10-1	4-Methyl-2-pentanone (MIBK)	ND	mg / Kg	1	0.025	03/06/01
X0163	XG.2001.273-1	67-64-1	Acetone	ND	mg / Kg	1	0.05	03/06/01
X0163	XG 2001.273-1	107-02-8	Acrolein	ND	mg / Kg	1	0.1	03/06/01
X0163	XG.2001.273-1	107-13-1	Acrylonitrile	ND	mg / Kg	1	0.1	03/06/01
X0163	XG 2001.273-1	71-43-2	Benzene	ND	mg / Kg	1	0.005	03/06/01
X0163	XG.2001.273-1	75-27-4	Bromodichloromethane	ND	mg / Kg	1	0.005	03/06/01
X0163	XG.2001.273-1	75-25-2	Bromoform	ND	mg / Kg	1	0.005	03/06/01
X0163	XG.2001.273-1	74-83-9	Bromomethane	ND	mg / Kg	1	0.025	03/06/01
X0163	XG.2001.273-1	75-15-0	Carbon disulfide	ND	mg / Kg	1	0.025	03/06/01
X0163	XG.2001.273-1	56-23-5	Carbon tetrachloride	ND	mg / Kg	1	0.005	03/06/01
X0163	XG.2001.273-1	108-90-7	Chlorobenzene	ND	mg / Kg	1	0.005	03/06/01
X0163	XG.2001.273-1	124-48-1	Chlorodibromomethane	ND	mg / Kg	1	0.005	03/06/01
X0163	XG.2001.273-1	75-00-3	Chloroethane	ND	mg / Kg	1	0.025	03/06/01
X0163	XG.2001.273-1	67-66-3	Chloroform	ND	mg / Kg	1	0.005	03/06/01
X0163	XG.2001.273-1	74-87-3	Chloromethane	ND	mg / Kg	1	0.025	03/06/01
X0163	XG.2001.273-1	156-59-2	cis-1,2 dichloroethene	ND	mg / Kg	1	0.005	03/06/01
X0163	XG.2001.273-1	10061-01-5	cis-1,3 dichloropropene	ND	mg / Kg	1	0.005	03/06/01
X0163	XG.2001.273-1	74-95-3	Dibromomethane	ND	mg / Kg	1	0.005	03/06/01
X0163	XG.2001.273-1	97-63-2	Ethyl methacrylate	ND	mg / Kg	1	0.025	03/06/01
X0163	XG.2001.273-1	100-41-4	Ethylbenzene	ND	mg / Kg	1	0.005	03/06/01
X0163	XG.2001.273-1		Freon 113	ND	mg / Kg	1	0.025	03/06/01
[illegible]	XG.2001.273-1	75-71-8	Freon 12	ND	mg / Kg	1	0.05	03/06/01
X0163	XG.2001.273-1	74-88-4	Iodomethane	ND	mg / Kg	1	0.025	03/06/01
X0163	XG.2001.273-1	1634-04-4	Methyl t-butyl ether (MTBE)	ND	mg / Kg	1	0.005	03/06/01
X0163	XG.2001.273-1	75-09-2	Methylene chloride	ND	mg / Kg	1	0.05	03/06/01
X0163	XG.2001.273-1	91-20-3	Naphthalene	ND	mg / Kg	1	0.025	03/06/01
X0163	XG.2001.273-1	95-47-6	o-Xylene	ND	mg / Kg	1	0.005	03/06/01
X0163	XG.2001.273-1	108-38-3/106-42	p/m Xylenes	ND	mg / Kg	1	0.01	03/06/01
X0163	XG.2001.273-1	100-42-5	Styrene	ND	mg / Kg	1	0.005	03/06/01
X0163	XG.2001.273-1	156-60-5	t-1,2 Dichloroethene	ND	mg / Kg	1	0.005	03/06/01
X0163	XG.2001.273-1	10061-02-6	t-1,3 Dichloropropene	ND	mg / Kg	1	0.005	03/06/01
X0163	XG.2001.273-1	127-18-4	Tetrachloroethene	ND	mg / Kg	1	0.005	03/06/01
X0163	XG.2001.273-1	108-88-3	Toluene	ND	mg / Kg	1	0.005	03/06/01
X0163	XG.2001.273-1	79-01-6	Trichloroethene	ND	mg / Kg	1	0.005	03/06/01
X0163	XG.2001.273-1	75-69-4	Trichlorofluoromethane	ND	mg / Kg	1	0.025	03/06/01
X0163	XG.2001.273-1	108-05-4	Vinyl acetate	ND	mg / Kg	1	0.025	03/06/01
X0163	XG.2001.273-1	75-01-4	Vinyl chloride	ND	mg / Kg	1	0.025	03/06/01
X0163-050		**SW846 8260A Purgeable VOCs by GC/MS**						
X0163	XG.2001.273-7	75-34-3	1,1 Dichloroethane	ND	mg / Kg	1	0.005	03/08/01
X0163	XG.2001.273-7	75-34-3	1,1 Dichloroethene	ND	mg / Kg	1	0.005	03/08/01
X0163	XG 2001.273-7	71-55-6	1,1,1 Trichloroethane	ND	mg / Kg	1	0.005	03/08/01
X0163	XG 2001.273-7	630-20-6	1,1,1,2 Tetrachloroethane	ND	mg / Kg	1	0.005	03/08/01
X0163	XG 2001.273-7	79-00-5	1,1,2 Trichloroethane	ND	mg / Kg	1	0.005	03/08/01
X0163	XG 2001.273-7	79-34-5	1,1,2,2 Tetrachloroethane	ND	mg / Kg	1	0.005	03/08/01
X0163	XG.2001.273-7	106-93-4	1,2 Dibromoethane (EDB)	ND	mg / Kg	1	0.005	03/08/01
[illegible]63	XG 2001 273-7	95-50-1	1,2 Dichlorobenzene	ND	mg / Kg	1	0.005	03/08/01
[illegible]63	XG 2001 273-7	107-06-2	1,2 Dichloroethane	ND	mg / Kg	1	0.005	03/08/01

Quality Control Summary

Client: **CH2MHILL**

Project: **0102298** **160660.02.FF.SA**

Explanation of codes

D *Not applicable due to sample dilut*

L *Not applicable due to MDL proximity*

X0163	XG.2001.273-7	78-87-5	1,2 Dichloropropane	ND	mg / Kg	1	0.005	03/08/0
X0163	XG.2001.273-7	96-18-4	1,2,3 Trichloropropane	ND	mg / Kg	1	0.005	03/08/0
X0163	XG.2001.273-7	95-63-6	1,2,4-Trimethylbenzene	ND	mg / Kg	1	0.005	03/08/0
X0163	XG.2001.273-7	541-73-1	1,3 Dichlorobenzene	ND	mg / Kg	1	0.005	03/08/0
X0163	XG.2001.273-7	108-67-8	1,3,5-Trimethylbenzene	ND	mg / Kg	1	0.005	03/08/0
X0163	XG.2001.273-7	764-41-0	1,4 Dichloro-2-butene	ND	mg / Kg	1	0.05	03/08/0
X0163	XG.2001.273-7	106-46-7	1,4 Dichlorobenzene	ND	mg / Kg	1	0.005	03/08/0
X0163	XG.2001.273-7	78-93-3	2-Butanone (MEK)	ND	mg / Kg	1	0.025	03/08/0
X0163	XG.2001.273-7	110-75-8	2-Chloroethylvinylether	ND	mg / Kg	1	0.025	03/08/0
X0163	XG.2001.273-7	591-78-6	2-Hexanone (MBK)	ND	mg / Kg	1	0.025	03/08/0
X0163	XG.2001.273-7	108-10-1	4-Methyl-2-pentanone (MIBK)	ND	mg / Kg	1	0.025	03/08/0
X0163	XG.2001.273-7	67-64-1	Acetone	ND	mg / Kg	1	0.05	03/08/01
X0163	XG.2001.273-7	107-02-8	Acrolein	ND	mg / Kg	1	0.1	03/08/01
X0163	XG.2001.273-7	107-13-1	Acrylonitrile	ND	mg / Kg	1	0.1	03/08/01
X0163	XG.2001.273-7	71-43-2	Benzene	ND	mg / Kg	1	0.005	03/08/01
X0163	XG.2001.273-7	75-27-4	Bromodichloromethane	ND	mg / Kg	1	0.005	03/08/01
X0163	XG.2001.273-7	75-25-2	Bromoform	ND	mg / Kg	1	0.005	03/08/01
X0163	XG.2001.273-7	74-83-9	Bromomethane	ND	mg / Kg	1	0.025	03/08/01
X0163	XG.2001.273-7	75-15-0	Carbon disulfide	ND	mg / Kg	1	0.025	03/08/01
X0163	XG.2001.273-7	56-23-5	Carbon tetrachloride	ND	mg / Kg	1	0.005	03/08/01
X0163	XG.2001.273-7	108-90-7	Chlorobenzene	ND	mg / Kg	1	0.005	03/08/01
X0163	XG.2001.273-7	124-48-1	Chlorodibromomethane	ND	mg / Kg	1	0.005	03/08/01
X0163	XG.2001.273-7	75-00-3	Chloroethane	ND	mg / Kg	1	0.025	03/08/01
X0163	XG.2001.273-7	67-66-3	Chloroform	ND	mg / Kg	1	0.005	03/08/
X0163	XG.2001.273-7	74-87-3	Chloromethane	ND	mg / Kg	1	0.025	03/08/0
X0163	XG.2001.273-7	156-59-2	cis-1,2 dichloroethene	ND	mg / Kg	1	0.005	03/08/01
X0163	XG.2001.273-7	10061-01-5	cis-1,3 dichloropropene	ND	mg / Kg	1	0.005	03/08/01
X0163	XG.2001.273-7	74-95-3	Dibromomethane	ND	mg / Kg	1	0.005	03/08/01
X0163	XG.2001.273-7	97-63-2	Ethyl methacrylate	ND	mg / Kg	1	0.025	03/08/01
X0163	XG.2001.273-7	100-41-4	Ethylbenzene	ND	mg / Kg	1	0.005	03/08/01
X0163	XG.2001.273-7		Freon 113	ND	mg / Kg	1	0.025	03/08/01
X0163	XG.2001.273-7	75-71-8	Freon 12	ND	mg / Kg	1	0.05	03/08/01
X0163	XG.2001.273-7	74-88-4	Iodomethane	ND	mg / Kg	1	0.025	03/08/01
X0163	XG.2001.273-7	1634-04-4	Methyl t-butyl ether (MTBE)	ND	mg / Kg	1	0.005	03/08/01
X0163	XG.2001.273-7	75-09-2	Methylene chloride	ND	mg / Kg	1	0.05	03/08/01
X0163	XG.2001.273-7	91-20-3	Naphthalene	ND	mg / Kg	1	0.025	03/08/0
X0163	XG.2001.273-7	95-47-6	o-Xylene	ND	mg / Kg	1	0.005	03/08/0
X0163	XG.2001.273-7	108-38-3/106-42	p/m Xylenes	ND	mg / Kg	1	0.01	03/08/0
X0163	XG.2001.273-7	100-42-5	Styrene	ND	mg / Kg	1	0.005	03/08/01
X0163	XG.2001.273-7	156-60-5	t-1,2 Dichloroethene	ND	mg / Kg	1	0.005	03/08/01
X0163	XG.2001.273-7	10061-02-6	t-1,3 Dichloropropene	ND	mg / Kg	1	0.005	03/08/01
X0163	XG.2001.273-7	127-18-4	Tetrachloroethene	ND	mg / Kg	1	0.005	03/08/01
X0163	XG.2001.273-7	108-88-3	Toluene	ND	mg / Kg	1	0.005	03/08/01
X0163	XG.2001.273-7	79-01-6	Trichloroethene	ND	mg / Kg	1	0.005	03/08/0
X0163	XG.2001.273-7	75-69-4	Trichlorofluoromethane	ND	mg / Kg	1	0.025	03/08/0
X0163	XG.2001.273-7	108-05-4	Vinyl acetate	ND	mg / Kg	1	0.025	03/08/01
X0163	XG.2001.273-7	75-01-4	Vinyl chloride	ND	mg / Kg	1	0.025	03/08/01

Quality Control Summary

Explanation of codes

D *Not applicable due to sample dilution*
L *Not applicable due to MDL proximity*

: CH2MHILL
Project: 0102298 160660.02.FF.SA

QC Type **MS: Matrix Spike** QC Matrix **SOLID**

QC Group	Run Sequence	CAS #	Analyte	Result	Units	Dilution Factor	Detection Limit	Code	Run Date
X0148-005		**SW846 ME/8015A Diesel Range Organics by GC/FID**							
X0148	XG.2001.169-5		Diesel Range Organics	99	% Recovery	1	NA		02/07/01
X0150-006		**SW846 5030A/8015A GRO by GC/FID**							
X0150	XG.2001.174-6		Gasoline Range Organics	94	% Recovery	1	NA		02/07/01
X0163-005		**SW846 8260A Purgeable VOCs by GC/MS**							
X0163	XG.2001.240-5	75-34-3	1,1 Dichloroethene	110	% Recovery	1	NA		02/21/01
X0163	XG.2001.240-5	106-46-7	1,4 Dichlorobenzene	106	% Recovery	1	NA		02/21/01
X0163	XG.2001.240-5	71-43-2	Benzene	112	% Recovery	1	NA		02/21/01
X0163	XG.2001.240-5	108-90-7	Chlorobenzene	108	% Recovery	1	NA		02/21/01
X0163	XG.2001.240-5	108-88-3	Toluene	115	% Recovery	1	NA		02/21/01
X0163	XG.2001.240-5	79-01-6	Trichloroethene	105	% Recovery	1	NA		02/21/01

QC Type **MSD: Matrix Spike Duplicate Accuracy** QC Matrix **SOLID**

Group	Run Sequence	CAS #	Analyte	Result	Units	Dilution Factor	Detection Limit	Code	Run Date
X0148-006		**SW846 ME/8015A Diesel Range Organics by GC/FID**							
X0148	XG.2001.169-6		Diesel Range Organics	96	% Recovery	1	NA		02/07/01
X0150-007		**SW846 5030A/8015A GRO by GC/FID**							
X0150	XG.2001.174-7		Gasoline Range Organics	92	% Recovery	1	NA		02/07/01
X0163-006		**SW846 8260A Purgeable VOCs by GC/MS**							
X0163	XG.2001.240-6	75-34-3	1,1 Dichloroethene	105	% Recovery	1	NA		02/21/01
X0163	XG.2001.240-6	106-46-7	1,4 Dichlorobenzene	103	% Recovery	1	NA		02/21/01
X0163	XG.2001.240-6	71-43-2	Benzene	108	% Recovery	1	NA		02/21/01
X0163	XG.2001.240-6	108-90-7	Chlorobenzene	106	% Recovery	1	NA		02/21/01
X0163	XG.2001.240-6	108-88-3	Toluene	112	% Recovery	1	NA		02/21/01
X0163	XG.2001.240-6	79-01-6	Trichloroethene	101	% Recovery	1	NA		02/21/01

QC Type **MSD: Matrix Spike Duplicate Precision** QC Matrix **SOLID**

QC Group	Run Sequence	CAS #	Analyte	Result	Units	Dilution Factor	Detection Limit	Code	Run Date
X0148-006		**SW846 ME/8015A Diesel Range Organics by GC/FID**							
X0148	XG.2001.169-6		Diesel Range Organics	3	RPD	1	NA		02/07/01
X0150-007		**SW846 5030A/8015A GRO by GC/FID**							
X0150	XG.2001.174-7		Gasoline Range Organics	3	RPD	1	NA		02/07/01
63-006		**SW846 8260A Purgeable VOCs by GC/MS**							
X0163	XG.2001.240-6	75-34-3	1,1 Dichloroethene	5	RPD	1	NA		02/21/01

Quality Control Summary

Client: **CH2MHILL**

Project: **0102298** **160660.02.FF.SA**

Explanation of codes

D *Not applicable due to sample dilut*

L *Not applicable due to MDL proximity*

X0163	XG.2001.240-6	106-46-7	1,4 Dichlorobenzene	3	RPD	1	NA	02/21/01
X0163	XG.2001.240-6	71-43-2	Benzene	4	RPD	1	NA	02/21/01
X0163	XG.2001.240-6	108-90-7	Chlorobenzene	2	RPD	1	NA	02/21/01
X0163	XG.2001.240-6	108-88-3	Toluene	3	RPD	1	NA	02/21/01
X0163	XG.2001.240-6	79-01-6	Trichloroethene	4	RPD	1	NA	02/21/01

Assaigai Analytical Laboratories, Inc.

Surrogate Summary: QC

Client: CH2MHILL

Project: 0102298 160660.02.FF.SA

QC Type **LCS** QC Matrix **SOLID**

QC Group	Run Sequence	CAS #	Analyte	Result	Units	Dilution Factor	Detection Limit	Code	Run Date
X0148-002		DRO							
X0148	XG.2001.169-2	NA	O-terphenyl	102	% Recovery	1	NA		02/07/01
X0163-002		8260							
X0163	XG.2001.240-2	NA	1,2 Dichloroethane-D4 (SS)	114	% Recovery	1	NA		02/21/01
X0163	XG.2001.240-2	NA	4-Bromofluorobenzene (SS)	109	% Recovery	1	NA		02/21/01
X0163	XG.2001.240-2	NA	Dibromofluoromethane (SS)	104	% Recovery	1	NA		02/21/01
X0163	XG.2001.240-2	NA	Toluene-D8 (SS)	103	% Recovery	1	NA		02/21/01

QC Type **LCSD** QC Matrix **SOLID**

QC Group	Run Sequence	CAS #	Analyte	Result	Units	Dilution Factor	Detection Limit	Code	Run Date
X0148-003		DRO							
X0148	XG.2001.169-3	NA	O-terphenyl	104	% Recovery	1	NA		02/07/01
X0150-003		GRO							
X0150	XG.2001.174-3	NA	4-Bromofluorobenzene-FID	100	% Recovery	1	NA		02/07/01
X0150	XG.2001.174-3	NA	4-Bromofluorobenzene-PID	ND	% Recovery	1	NA		02/07/01
X0150	XG.2001.174-3	NA	aaa-Trifluorotoluene-FID	107	% Recovery	1	NA		02/07/01
X0150	XG.2001.174-3	NA	aaa-Trifluorotoluene-PID	ND	% Recovery	1	NA		02/07/01
X0163-003		8260							
X0163	XG.2001.240-3	NA	1,2 Dichloroethane-D4 (SS)	112	% Recovery	1	NA		02/21/01
X0163	XG.2001.240-3	NA	4-Bromofluorobenzene (SS)	107	% Recovery	1	NA		02/21/01
X0163	XG.2001.240-3	NA	Dibromofluoromethane (SS)	103	% Recovery	1	NA		02/21/01
X0163	XG.2001.240-3	NA	Toluene-D8 (SS)	103	% Recovery	1	NA		02/21/01

QC Type **MB** QC Matrix **SOLID**

QC Group	Run Sequence	CAS #	Analyte	Result	Units	Dilution Factor	Detection Limit	Code	Run Date
X0148-001		DRO							
X0148	XG.2001.169-1	NA	O-terphenyl	92	% Recovery	1	NA		02/07/01
X0148-008		DRO							
X0148	XG.2001.175-1	NA	O-terphenyl	92	% Recovery	1	NA		02/09/01
X0148-011		DRO							
X0148	XG.2001.182-1	NA	O-terphenyl	90	% Recovery	1	NA		02/09/01
X0148-013		DRO							
X0148	XG.2001.194-1	NA	O-terphenyl	87	% Recovery	1	NA		02/14/01

Surrogate Summary: QC

Client: **CH2MHILL**

Project: **0102298** **160660.02.FF.SA**

X0148-017		DRO						
X0148	XG.2001.213-1	NA	O-terphenyl	88	% Recovery	1	NA	02/21/01
X0148-025		DRO						
X0148	XG.2001.239-1	NA	O-terphenyl	88	% Recovery	1	NA	02/27/01
X0148-026		DRO						
X0148	XG.2001.247-1	NA	O-terphenyl	81	% Recovery	1	NA	02/28/01
X0150-001		GRO						
X0150	XG.2001.174-1	NA	4-Bromofluorobenzene-FID	87	% Recovery	1	NA	02/07/01
X0150	XG.2001.174-1	NA	4-Bromofluorobenzene-PID	ND	% Recovery	1	NA	02/07/01
X0150	XG.2001.174-1	NA	aaa-Trifluorotoluene-FID	102	% Recovery	1	NA	02/07/01
X0150	XG.2001.174-1	NA	aaa-Trifluorotoluene-PID	ND	% Recovery	1	NA	02/07/01
X0150-008		GRO						
X0150	XG.2001.183-1	NA	4-Bromofluorobenzene-FID	87	% Recovery	1	NA	02/09/01
X0150	XG.2001.183-1	NA	4-Bromofluorobenzene-PID	ND	% Recovery	1	NA	02/09/01
X0150	XG.2001.183-1	NA	aaa-Trifluorotoluene-FID	105	% Recovery	1	NA	02/09/01
X0150	XG.2001.183-1	NA	aaa-Trifluorotoluene-PID	ND	% Recovery	1	NA	02/09/01
X0150-010		GRO						
X0150	XG.2001.192-1	NA	4-Bromofluorobenzene-FID	90	% Recovery	1	NA	02/13/01
X0150	XG.2001.192-1	NA	4-Bromofluorobenzene-PID	ND	% Recovery	1	NA	02/13/01
X0150	XG.2001.192-1	NA	aaa-Trifluorotoluene-FID	105	% Recovery	1	NA	02/13/01
X0150	XG.2001.192-1	NA	aaa-Trifluorotoluene-PID	ND	% Recovery	1	NA	02/13/
X0150-014		GRO						
X0150	XG.2001.214-1	NA	4-Bromofluorobenzene-FID	88	% Recovery	1	NA	02/21/01
X0150	XG.2001.214-1	NA	4-Bromofluorobenzene-PID	28	% Recovery	1	NA	02/21/01
X0150	XG.2001.214-1	NA	aaa-Trifluorotoluene-FID	102	% Recovery	1	NA	02/21/01
X0150	XG.2001.214-1	NA	aaa-Trifluorotoluene-PID	17	% Recovery	1	NA	02/21/01
X0150-024		GRO						
X0150	XG.2001.238-1	NA	4-Bromofluorobenzene-FID	90	% Recovery	1	NA	02/27/01
X0150	XG.2001.238-1	NA	4-Bromofluorobenzene-PID	437	% Recovery	1	NA	02/27/01
X0150	XG.2001.238-1	NA	aaa-Trifluorotoluene-FID	104	% Recovery	1	NA	02/27/01
X0150	XG.2001.238-1	NA	aaa-Trifluorotoluene-PID	116	% Recovery	1	NA	02/27/01
X0150-027		GRO						
X0150	XG.2001.246-1	NA	4-Bromofluorobenzene-FID	88	% Recovery	1	NA	02/28/01
X0150	XG.2001.246-1	NA	4-Bromofluorobenzene-PID	ND	% Recovery	1	NA	02/28/01
X0150	XG.2001.246-1	NA	aaa-Trifluorotoluene-FID	101	% Recovery	1	NA	02/28/01
X0150	XG.2001.246-1	NA	aaa-Trifluorotoluene-PID	77	% Recovery	1	NA	02/28/01
X0163-001		8260						
X0163	XG.2001.240-1	NA	1,2 Dichloroethane-D4 (SS)	113	% Recovery	1	NA	02/21/01
X0163	XG.2001.240-1	NA	4-Bromofluorobenzene (SS)	105	% Recovery	1	NA	02/21/01
X0163	XG.2001.240-1	NA	Dibromofluoromethane (SS)	103	% Recovery	1	NA	02/21/01
X0163	XG.2001.240-1	NA	Toluene-D8 (SS)	102	% Recovery	1	NA	02/21/01
X0163-008		8260						
X0163	XG.2001.240-8	NA	1,2 Dichloroethane-D4 (SS)	98	% Recovery	1	NA	02/22/01
X0163	XG.2001.240-8	NA	4-Bromofluorobenzene (SS)	102	% Recovery	1	NA	02/22
X0163	XG.2001.240-8	NA	Dibromofluoromethane (SS)	102	% Recovery	1	NA	02/22

Surrogate Summary: QC

t: CH2MHILL
Project: 0102298 160660.02.FF.SA

X0163	XG.2001.240-8	NA	Toluene-D8 (SS)	100	% Recovery	1	NA		02/22/01
X0163-017		**8260**							
X0163	XG.2001.240-16	NA	1,2 Dichloroethane-D4 (SS)	85	% Recovery	1	NA		02/23/01
X0163	XG.2001.240-16	NA	4-Bromofluorobenzene (SS)	101	% Recovery	1	NA		02/23/01
X0163	XG.2001.240-16	NA	Dibromofluoromethane (SS)	96	% Recovery	1	NA		02/23/01
X0163	XG.2001.240-16	NA	Toluene-D8 (SS)	99	% Recovery	1	NA		02/23/01
X0163-034		**8260**							
X0163	XG.2001.240-26	NA	1,2 Dichloroethane-D4 (SS)	91	% Recovery	1	NA		02/26/01
X0163	XG.2001.240-26	NA	4-Bromofluorobenzene (SS)	98	% Recovery	1	NA		02/26/01
X0163	XG.2001.240-26	NA	Dibromofluoromethane (SS)	100	% Recovery	1	NA		02/26/01
X0163	XG.2001.240-26	NA	Toluene-D8 (SS)	102	% Recovery	1	NA		02/26/01
X0163-035		**8260**							
X0163	XG.2001.242-1	NA	1,2 Dichloroethane-D4 (SS)	92	% Recovery	1	NA		02/27/01
X0163	XG.2001.242-1	NA	4-Bromofluorobenzene (SS)	98	% Recovery	1	NA		02/27/01
X0163	XG.2001.242-1	NA	Dibromofluoromethane (SS)	101	% Recovery	1	NA		02/27/01
X0163	XG.2001.242-1	NA	Toluene-D8 (SS)	100	% Recovery	1	NA		02/27/01
X0163-042		**8260**							
X0163	XG.2001.273-1	NA	1,2 Dichloroethane-D4 (SS)	91	% Recovery	1	NA		03/06/01
X0163	XG.2001.273-1	NA	4-Bromofluorobenzene (SS)	97	% Recovery	1	NA		03/06/01
X0163	XG.2001.273-1	NA	Dibromofluoromethane (SS)	100	% Recovery	1	NA		03/06/01
X0163	XG.2001.273-1	NA	Toluene-D8 (SS)	101	% Recovery	1	NA		03/06/01
X0163-050		**8260**							
X0163	XG.2001.273-7	NA	1,2 Dichloroethane-D4 (SS)	88	% Recovery	1	NA		03/08/01
X0163	XG.2001.273-7	NA	4-Bromofluorobenzene (SS)	98	% Recovery	1	NA		03/08/01
X0163	XG.2001.273-7	NA	Dibromofluoromethane (SS)	99	% Recovery	1	NA		03/08/01
X0163	XG.2001.273-7	NA	Toluene-D8 (SS)	100	% Recovery	1	NA		03/08/01

QC Type **MS** QC Matrix **SOLID**

QC Group	Run Sequence	CAS #	Analyte	Result	Units	Dilution Factor	Detection Limit	Code	Run Date
X0148-005		**DRO**							
X0148	XG.2001.169-5	NA	O-terphenyl	107	% Recovery	1	NA		02/07/01
X0150-006		**GRO**							
X0150	XG.2001.174-6	NA	4-Bromofluorobenzene-FID	114	% Recovery	1	NA		02/07/01
X0150	XG.2001.174-6	NA	4-Bromofluorobenzene-PID	ND	% Recovery	1	NA		02/07/01
X0150	XG.2001.174-6	NA	aaa-Trifluorotoluene-FID	124	% Recovery	1	NA		02/07/01
X0150	XG.2001.174-6	NA	aaa-Trifluorotoluene-PID	ND	% Recovery	1	NA		02/07/01
X0163-005		**8260**							
X0163	XG.2001.240-5	NA	1,2 Dichloroethane-D4 (SS)	113	% Recovery	1	NA		02/21/01
X0163	XG.2001.240-5	NA	4-Bromofluorobenzene (SS)	108	% Recovery	1	NA		02/21/01
X0163	XG.2001.240-5	NA	Dibromofluoromethane (SS)	103	% Recovery	1	NA		02/21/01
X0163	XG.2001.240-5	NA	Toluene-D8 (SS)	102	% Recovery	1	NA		02/21/01

Surrogate Summary: QC

Client: **CH2MHILL**

Project: **0102298** **160660.02.FF.SA**

QC Type **MSD** QC Matrix **SOLID**

QC Group	Run Sequence	CAS #	Analyte	Result	Units	Dilution Factor	Detection Limit	Code	Run Date
X0148-006		DRO							
X0148	XG.2001.169-6	NA	O-terphenyl	108	% Recovery	1	NA		02/07/01
X0150-007		GRO							
X0150	XG.2001.174-7	NA	4-Bromofluorobenzene-FID	113	% Recovery	1	NA		02/07/01
X0150	XG.2001.174-7	NA	4-Bromofluorobenzene-PID	ND	% Recovery	1	NA		02/07/01
X0150	XG.2001.174-7	NA	aaa-Trifluorotoluene-FID	125	% Recovery	1	NA		02/07/01
X0150	XG.2001.174-7	NA	aaa-Trifluorotoluene-PID	ND	% Recovery	1	NA		02/07/01
X0163-006		8260							
X0163	XG.2001.240-6	NA	1,2 Dichloroethane-D4 (SS)	114	% Recovery	1	NA		02/21/01
X0163	XG.2001.240-6	NA	4-Bromofluorobenzene (SS)	107	% Recovery	1	NA		02/21/01
X0163	XG.2001.240-6	NA	Dibromofluoromethane (SS)	103	% Recovery	1	NA		02/21/01
X0163	XG.2001.240-6	NA	Toluene-D8 (SS)	103	% Recovery	1	NA		02/21/01

Assaigai Analytical Laboratories, Inc.

Surrogate Summary: Fraction

RECEIVED MAR 1 2 2001

Client: CH2MHILL

Project: 0102298 160660.02.FF.SA

Client Sample ID: **ST 106 SB29A 260'**

Sample Matrix: **SOIL**

QC Group	Run Sequence	CAS #	Analyte	Result	Units	Dilution Factor	Detection Limit	Code	Run Date
0102298-01A		GRO							X0150-026
X0150	XG.2001.238-3	NA	4-Bromofluorobenzene-FID	87	% Recovery	1	NA		02/27/01
X0150	XG.2001.238-3	NA	4-Bromofluorobenzene-PID	72	% Recovery	1	NA		02/27/01
X0150	XG.2001.238-3	NA	aaa-Trifluorotoluene-FID	100	% Recovery	1	NA		02/27/01
X0150	XG.2001.238-3	NA	aaa-Trifluorotoluene-PID	ND	% Recovery	1	NA		02/27/01
0102298-01B		DRO							X0148-024
X0148	XG.2001.239-3	NA	O-terphenyl	93	% Recovery	1	NA		02/27/01
0102298-01C		8260							X0163-047
X0163	XG.2001.273-5	NA	1,2 Dichloroethane-D4 (SS)	97	% Recovery	1	NA		03/06/01
X0163	XG.2001.273-5	NA	4-Bromofluorobenzene (SS)	100	% Recovery	1	NA		03/06/01
X0163	XG.2001.273-5	NA	Dibromofluoromethane (SS)	97	% Recovery	1	NA		03/06/01
X0163	XG.2001.273-5	NA	Toluene-D8 (SS)	102	% Recovery	1	NA		03/06/01

ASSAIGAI ANALYTICAL LABORATORIES, INC.

CHEM 8 3/13/01 FR167R I-4

Chain of Custody Record

7300 JEFFERSON NE
ALBUQUERQUE, NEW MEXICO 87109
(505) 345-8964

3332 WEDGEWOOD
EL PASO, TEXAS 79925
(915) 593-6000

127 EASTGATE DRIVE, 212-C
LOS ALAMOS, NEW MEXICO 87544
(505) 662-2558

RECEIVED MAR 1 3 200

Lab job No. D102298 Date 2·26·01

Page 1 of 1

Client CHEMNLL/ABQ

Address [illegible] NE # 350

City / State / Zip ABQ NM 87110

Project Name / Number [illegible]/TO-10

Contract / Purchase Order / Quote

Project Manager / Contact HALLORAN/LEFEVRE

Telephone No. 8941 5600

Fax No. 883 7507

Samplers : (signature)

AAL Fraction Number	Field Sample Number / Location	Date	Time	Sample Type	Type / Size of Container	Preservation Temp.	Preservation Chemical	No. of Containers	PCB	CHW	VOC							Remarks
[illegible]	[illegible] 2029A 2600	2 26	1520	Sil	4 OZ	16	—	3	X	X	X							

no sample

Relinquished by:	Date	Received by:	Relinquished by:	Date	Received by:
Signature [illegible]	2-26	Signature [illegible]	Signature		Signature
Printed [illegible]	Time 1720	Printed M Wiaza	Printed	Time	Printed
Company CHEMNLL		Company AAL	Company		Company
Reason [illegible] LAB		Reason Analysis	Reason		Reason

Method of Shipment:

Shipment No.

Special Instructions:

Comments: B015B = 24 hr TAT

After analysis, samples are to be:

- ❑ Disposed of (additional fee)
- ❑ Stored (30 days max)
- ❑ Stored over 30 days (additional fee)
- ❑ Returned to customer

ASSAIGAI
ANALYTICAL
LABORATORIES, INC.
7300 Jefferson, NE • Albuquerque, New Mexico 87109 • (505) 345-8964 • FAX (505) 345-7259
3332 Wedgewood Dr., Suite N • El Paso, Texas 79925 • (915) 593-6000 • FAX (915) 593-7820
127 Eastgate Drive, 212-C • Los Alamos, New Mexico 87544 • (505) 662-2558

PARTIAL REPORT

Explanation of codes	
B	analyte detected in Method Blank
E	result is estimated
H	analyzed out of hold time
N	tentatively identified compound
S	subcontracted
1-8	see footnote

CH2MHILL
attn: AMY HALLORAN
6001 INDIAN SCHOOL RD NE STE 350
ALBUQUERQUE, NM 87110-4140

Assaigai Analytical Laboratories, Inc.

Certificate of Analysis

PRELIMINARY REPORT

Client: CH2MHILL
Project: 0102307 160660.02.FF.SA

William P. Biava: President of Assaigai Analytical Laboratories, Inc.

Client Sample ID: **ST106 SB29A 270'** Sample Matrix: **SOIL** Sample Collected: 02/26/01 16:25:00

QC Group	Run Sequence	CAS #	Analyte	Result	Units	Dilution Factor	Detection Limit	Code	Run Date
0102307-01A		SW846 5030A/8015A GRO by GC/FID							
X0150	XG.2001.246-3		Gasoline Range Organics	ND	mg / Kg	1	0.25		02/28/01
0102307-01B		SW846 ME/8015A Diesel Range Organics by GC/FID							
X0148	XG.2001.247-4		Diesel Range Organics	ND	mg / Kg	1	25		02/28/01

Client Sample ID: **ST106 SB29A 290** Sample Matrix: **SOIL** Sample Collected: 02/27/01 15:30:00

QC Group	Run Sequence	CAS #	Analyte	Result	Units	Dilution Factor	Detection Limit	Code	Run Date
0102307-02A		SW846 5030A/8015A GRO by GC/FID							
X0150	XG.2001.246-4		Gasoline Range Organics	ND	mg / Kg	1	0.25		02/28/01
0102307-02B		SW846 ME/8015A Diesel Range Organics by GC/FID							
X0148	XG.2001.247-3		Diesel Range Organics	ND	mg / Kg	1	25		02/28/01

Member:
American Council of
Independent Laboratories, Inc.

REPRODUCTION OF THIS REPORT IN LESS THAN FULL REQUIRES THE WRITTEN CONSENT OF AAL.
THIS REPORT MAY NOT BE USED IN ANY MANNER BY THE CLIENT OR ANY OTHER THIRD PARTY TO CLAIM
PRODUCT ENDORSEMENT BY ANY ACCREDITATION PROGRAM

Assaigai Analytical Laboratories, Inc.

Certificate of Analysis

Client: **CH2MHILL**

Project: **0102307** **160680.02.FF.SA**

Client Sample ID ***ST106 SB29A*** 300

Sample Matrix ***SOIL***

Sample Collected *02/27/01*

QC Group	Run Sequence	CAS #	Analyte	Result	Units	Dilution Factor	Detection Limit	Code	Run Date
0102307-03A		**SW846 5030A/8015A GRO by GC/FID**							
X0150	XG.2001.246-2		Gasoline Range Organics	ND	mg / Kg	1	0.25		02/28/01
0102307-03B		**SW846 ME/8015A Diesel Range Organics by GC/FID**							
X0148	XG.2001.247-2		Diesel Range Organics	73	mg / Kg	1	25		02/29/01

**** Sample specific Detection Limit is determined by multiplying the sample Dilution Factor by the listed Reporting Detection Limit. ****

**** ND = Not detected: less than the sample specific Detection Limit. Results relate only to the items tested. ****

ASSAIGAI ANALYTICAL LABORATORIES, INC.

7300 JEFFERSON N.E.
ALBUQUERQUE, NEW MEXICO
(505) 345-8964

3332 WEDGEWOOD
EL PASO, TEXAS 79925
(915) 593-6000

127 EASTGATE DRIVE, 212-C
LOS ALAMOS, NEW MEXICO 87544
(505) 662-2558

Chain of Custody Record

Lab Job No.: 0102307 Date 2-27

Page 1 of 1

Client CH2M HILL

Address 6001 INDIAN SCHOOL RD NE #350

City / State / Zip ABQ NM 87110

Project Name / Number KAFB IT0-10

Contract / Purchase Order / Quote

Project Manager / Contact Holloran LeFevre

Telephone No. [redacted]345600

Fax No. 8837507

Samplers: (signature) [signature]

Analysis Required

AAL Fraction Number	Field Sample Number / Location	Date	Time	Sample Type	Type / Size of Container	Preservation: Temp.	Preservation: Chemical	No. of Containers	GRO	DRO	BTEX								Remarks
1A,B	ST106 SB29A 270'	2-26	1625	Soil	4oz	ICE	—	2	X	X									
2A,B,C	ST106 SB29A 290	2-27	1530	Soil	4oz	ICE	—	3	X	X	X								
3A,B	ST106 SB29A 300'	2-27		Soil	4oz	ICE	—	2	X	X									

Relinquished by:	Date	Received by:	Relinquished by:	Date	Received by:
Signature [signature]	2-27-01	Signature [signature]	Signature		Signature
Printed Wm. LeFevre	Time 1731	Printed M Wren	Printed	Time	Printed
Company CH2MHILL		Company AAL	Company		Company
Reason DROP @ LAB		Reason Analysis	Reason		Reason

Method of Shipment:

Shipment No.

Special Instructions:

Comments: 24 hr TAT on GRO/DRO

After analysis, samples are to be:

- ☐ Disposed of (additional fee)
- ☐ Stored (30 days max)
- ☐ Stored over 30 days (additional fee)
- ☐ Returned to customer

ASSAIGAI PROJECT FILE

FEB 28 '01 15:16 TO-CH2MHILL FROM-ASSAIGAI LAB T-660 P.03/03 F-667

ASSAIGAI
ANALYTICAL
LABORATORIES, INC.
7300 Jefferson, NE • Albuquerque, New Mexico 87109 • (505) 345-8964 • FAX (505) 345-7259
3332 Wedgewood Dr., Suite N • El Paso, Texas 79925 • (915) 593-6000 • FAX (915) 593-7820
127 Eastgate Drive, 212-C • Los Alamos, New Mexico 87544 • (505) 662-2558

RECEIVED MAR 1 2 2001

Explanation of codes

B	*analyte detected in Method Blank*
E	*result is estimated*
H	*analyzed out of hold time*
N	*tentatively identified compound*
S	*subcontracted*
1-9	*see footnote*

CH2MHILL
attn: **AMY HALLORAN**
6001 INDIAN SCHOOL RD NE STE 350
ALBUQUERQUE, NM 87110-4140

Assaigai Analytical Laboratories, Inc.

Certificate of Analysis

Client: **CH2MHILL**
Project: **0102307** **160660.02.FF.SA**

William P. Biava: President of Assaigai Analytical Laboratories, Inc.

Client Sample ID ***ST106 SB29A 270'*** Sample Matrix ***SOIL*** Sample Collected ***02/26/01 16:25:00***

QC Group	Run Sequence	CAS #	Analyte	Result	Units	Dilution Factor	Detection Limit	Code	Run Date
0102307-01A		**SW846 5030A/8015A GRO by GC/FID**							
X0150	XG.2001.246-3		Gasoline Range Organics	ND	mg / Kg	1	0.25		02/28/01
0102307-01B		**SW846 ME/8015A Diesel Range Organics by GC/FID**							
X0148	XG.2001.247-4		Diesel Range Organics	ND	mg / Kg	1	25		02/28/01

Client Sample ID ***ST106 SB29A 290*** Sample Matrix ***SOIL*** Sample Collected ***02/27/01 15:30:00***

QC Group	Run Sequence	CAS #	Analyte	Result	Units	Dilution Factor	Detection Limit	Code	Run Date
0102307-02A		**SW846 5030A/8015A GRO by GC/FID**							
X0150	XG.2001.246-4		Gasoline Range Organics	ND	mg / Kg	1	0.25		02/28/01
0102307-02B		**SW846 ME/8015A Diesel Range Organics by GC/FID**							
X0148	XG.2001.247-3		Diesel Range Organics	ND	mg / Kg	1	25		02/28/01
0102307-02C		**SW846 5030A/8021B Purgeable VOCs by GC/PID**							
X0158	XG.2001.255-4	71-43-2	Benzene	ND	mg / Kg	1	0.005	1	03/01/01
X0158	XG.2001.255-4	100-41-4	Ethylbenzene	ND	mg / Kg	1	0.005	1	03/01/01
X0158	XG.2001.255-4	95-47-6	o-Xylene	ND	mg / Kg	1	0.005	1	03/01/01
[illegible]58	XG.2001.255-4	108-38-3/106-42	p/m-Xylenes	ND	mg / Kg	1	0.01	1	03/01/01

Member
American Council of
Independent Laboratories, Inc.

REPRODUCTION OF THIS REPORT IN LESS THAN FULL REQUIRES THE WRITTEN CONSENT OF AAL
THIS REPORT MAY NOT BE USED IN ANY MANNER BY THE CLIENT OR ANY OTHER THIRD PARTY TO CLAIM
PRODUCT ENDORSEMENT BY ANY ACCREDITATION PROGRAM

Certificate of Analysis

RECEIVED MAR 1 2 2001

Client: **CH2MHILL**

Project: **0102307** **160660.02.FF.SA**

X0158	XG.2001.255-4	108-88-3	Toluene	ND	mg / Kg	1	0.005	1	03/01/01

Client Sample ID ***ST106 SB29A*** Sample Matrix ***SOIL*** Sample Collected ***02/27/01***

QC Group	Run Sequence	CAS #	Analyte	Result	Units	Dilution Factor	Detection Limit	Code	Run Date
0102307-03A		**SW846 5030A/8015A GRO by GC/FID**							
X0150	XG.2001.246-2		Gasoline Range Organics	ND	mg / Kg	1	0.25		02/28/01
0102307-03B		**SW846 ME/8015A Diesel Range Organics by GC/FID**							
X0148	XG.2001.247-2		Diesel Range Organics	73	mg / Kg	1	25		02/28/01

**** Sample specific Detection Limit is determined by multiplying the sample Dilution Factor by the listed Reporting Detection Limit. ****

**** ND = Not detected: less than the sample specific Detection Limit. Results relate only to the items tested. ****

footnote [1] The sample had headspace at the time of analysis.

Assaigai Analytical Laboratories, Inc.

Quality Control Summary

Client: CH2MHILL

Project: 0102307 160660.02.FF.SA

Explanation of codes

D	*Not applicable due to sample dilution*
L	*Not applicable due to MDL proximity*

QC Type **LCS: Lab Control Spike** QC Matrix **SOLID**

QC Group	Run Sequence	CAS #	Analyte	Result	Units	Dilution Factor	Detection Limit	Code	Run Date
X0148-002		**SW846 ME/8015A Diesel Range Organics by GC/FID**							
X0148	XG.2001.169-2		Diesel Range Organics	90	% Recovery	1	NA		02/07/01
X0158-002		**SW846 5030A/8021B Purgeable VOCs by GC/PID**							
X0158	XG.2001.210-2	71-43-2	Benzene	97	% Recovery	1	NA		02/15/01
X0158	XG.2001.210-2	100-41-4	Ethylbenzene	97	% Recovery	1	NA		02/15/01
X0158	XG.2001.210-2	95-47-6	o-Xylene	96	% Recovery	1	NA		02/15/01
X0158	XG.2001.210-2	108-38-3/106-42	p/m-Xylenes	98	% Recovery	1	NA		02/15/01
X0158	XG.2001.210-2	108-88-3	Toluene	96	% Recovery	1	NA		02/15/01

QC Type **LCSD: Lab Control Spike Duplicate Accuracy** QC Matrix **SOLID**

QC Group	Run Sequence	CAS #	Analyte	Result	Units	Dilution Factor	Detection Limit	Code	Run Date
X0148-003		**SW846 ME/8015A Diesel Range Organics by GC/FID**							
[illegible]	XG.2001.169-3		Diesel Range Organics	91	% Recovery	1	NA		02/07/01
X0150-003		**SW846 5030A/8015A GRO by GC/FID**							
X0150	XG.2001.174-3		Gasoline Range Organics	92	% Recovery	1	NA		02/07/01
X0158-003		**SW846 5030A/8021B Purgeable VOCs by GC/PID**							
X0158	XG.2001.210-3	71-43-2	Benzene	100	% Recovery	1	NA		02/15/01
X0158	XG.2001.210-3	100-41-4	Ethylbenzene	99	% Recovery	1	NA		02/15/01
X0158	XG.2001.210-3	95-47-6	o-Xylene	98	% Recovery	1	NA		02/15/01
X0158	XG.2001.210-3	108-38-3/106-42	p/m-Xylenes	100	% Recovery	1	NA		02/15/01
X0158	XG.2001.210-3	108-88-3	Toluene	98	% Recovery	1	NA		02/15/01

QC Type **LCSD: Lab Control Spike Duplicate Precision** QC Matrix **SOLID**

QC Group	Run Sequence	CAS #	Analyte	Result	Units	Dilution Factor	Detection Limit	Code	Run Date
X0148-003		**SW846 ME/8015A Diesel Range Organics by GC/FID**							
X0148	XG.2001.169-3		Diesel Range Organics	1	RPD	1	NA		02/07/01
X0150-003		**SW846 5030A/8015A GRO by GC/FID**							
X0150	XG.2001.174-3		Gasoline Range Organics	7	RPD	1	NA		02/07/01
X0158-003		**SW846 5030A/8021B Purgeable VOCs by GC/PID**							
X0158	XG.2001.210-3	71-43-2	Benzene	3	RPD	1	NA		02/15/01
X0158	XG.2001.210-3	100-41-4	Ethylbenzene	2	RPD	1	NA		02/15/01
X0158	XG.2001.210-3	95-47-6	o-Xylene	3	RPD	1	NA		02/15/01
[illegible]	XG.2001.210-3	108-38-3/106-42	p/m-Xylenes	2	RPD	1	NA		02/15/01

RECEIVED MAR 2001

Client: **CH2MHILL**

Project: **0102307** **160660.02.FF.SA**

Explanation of codes

D *Not applicable due to sample dilu*

L *Not applicable due to MDL proxin*

X0158	XG.2001.210-3	108-88-3	Toluene	3	RPD	1	NA		02/15/01

QC Type **MB: Method Blank** QC Matrix **SOLID**

QC Group	Run Sequence	CAS #	Analyte	Result	Units	Dilution Factor	Detection Limit	Code	Run Date
X0148-001		**SW846 ME/8015A Diesel Range Organics by GC/FID**							
X0148	XG.2001.169-1		Diesel Range Organics	ND	mg / Kg	1	25		02/07/01
X0148-008		**SW846 ME/8015A Diesel Range Organics by GC/FID**							
X0148	XG.2001.175-1		Diesel Range Organics	ND	mg / Kg	1	25		02/08/01
X0148-011		**SW846 ME/8015A Diesel Range Organics by GC/FID**							
X0148	XG.2001.182-1		Diesel Range Organics	ND	mg / Kg	1	25		02/09/01
X0148-013		**SW846 ME/8015A Diesel Range Organics by GC/FID**							
X0148	XG.2001.194-1		Diesel Range Organics	ND	mg / Kg	1	25		02/14/01
X0148-017		**SW846 ME/8015A Diesel Range Organics by GC/FID**							
X0148	XG.2001.213-1		Diesel Range Organics	ND	mg / Kg	1	25		02/21/01
X0148-025		**SW846 ME/8015A Diesel Range Organics by GC/FID**							
X0148	XG.2001.239-1		Diesel Range Organics	ND	mg / Kg	1	25		02/27/01
X0148-026		**SW846 ME/8015A Diesel Range Organics by GC/FID**							
X0148	XG.2001.247-1		Diesel Range Organics	ND	mg / Kg	1	25		02/2
X0150-001		**SW846 5030A/8015A GRO by GC/FID**							
X0150	XG.2001.174-1		Gasoline Range Organics	ND	mg / Kg	1	0.25		02/07/01
X0150-008		**SW846 5030A/8015A GRO by GC/FID**							
X0150	XG.2001.183-1		Gasoline Range Organics	ND	mg / Kg	1	0.25		02/09/01
X0150-010		**SW846 5030A/8015A GRO by GC/FID**							
X0150	XG.2001.192-1		Gasoline Range Organics	ND	mg / Kg	1	0.25		02/13/01
X0150-014		**SW846 5030A/8015A GRO by GC/FID**							
X0150	XG.2001.214-1		Gasoline Range Organics	ND	mg / Kg	1	0.25		02/21/01
X0150-024		**SW846 5030A/8015A GRO by GC/FID**							
X0150	XG.2001.238-1		Gasoline Range Organics	ND	mg / Kg	1	0.25		02/27/01
X0150-027		**SW846 5030A/8015A GRO by GC/FID**							
X0150	XG.2001.246-1		Gasoline Range Organics	ND	mg / Kg	1	0.25		02/28/01
X0158-001		**SW846 5030A/8021B Purgeable VOCs by GC/PID**							
X0158	XG.2001.210-1	71-43-2	Benzene	ND	mg / Kg	1	0.005		02/15/01
X0158	XG.2001.210-1	100-41-4	Ethylbenzene	ND	mg / Kg	1	0.005		02/15/01
X0158	XG.2001.210-1	95-47-6	o-Xylene	ND	mg / Kg	1	0.005		02/15/01
X0158	XG.2001.210-1	108-38-3/106-42	p/m-Xylenes	ND	mg / Kg	1	0.01		02/15/01
X0158	XG.2001.210-1	108-88-3	Toluene	ND	mg / Kg	1	0.005		02/15/01
X0158-004		**SW846 5030A/8021B Purgeable VOCs by GC/PID**							
X0158	XG.2001.210-4	71-43-2	Benzene	ND	mg / Kg	1	0.005		02/20/01
X0158	XG.2001.210-4	100-41-4	Ethylbenzene	ND	mg / Kg	1	0.005		02/2

Quality Control Summary

Explanation of codes

D	*Not applicable due to sample dilution*
L	*Not applicable due to MDL proximity*

Client: CH2MHILL
Project: 0102307 160660.02.FF.SA

X0158	XG.2001.210-4	95-47-6	o-Xylene	ND	mg / Kg	1	0.005		02/20/01
X0158	XG.2001.210-4	108-38-3/106-42	p/m-Xylenes	ND	mg / Kg	1	0.01		02/20/01
X0158	XG.2001.210-4	108-88-3	Toluene	ND	mg / Kg	1	0.005		02/20/01
X0158-017		**SW846 5030A/8021B Purgeable VOCs by GC/PID**							
X0158	XG.2001.220-1	71-43-2	Benzene	ND	mg / Kg	1	0.005		02/21/01
X0158	XG.2001.220-1	100-41-4	Ethylbenzene	ND	mg / Kg	1	0.005		02/21/01
X0158	XG.2001.220-1	95-47-6	o-Xylene	ND	mg / Kg	1	0.005		02/21/01
X0158	XG.2001.220-1	108-38-3/106-42	p/m-Xylenes	ND	mg / Kg	1	0.01		02/21/01
X0158	XG.2001.220-1	108-88-3	Toluene	ND	mg / Kg	1	0.005		02/21/01
X0158-027		**SW846 5030A/8021B Purgeable VOCs by GC/PID**							
X0158	XG.2001.220-8	71-43-2	Benzene	ND	mg / Kg	1	0.005		02/22/01
X0158	XG.2001.220-8	100-41-4	Ethylbenzene	ND	mg / Kg	1	0.005		02/22/01
X0158	XG.2001.220-8	95-47-6	o-Xylene	ND	mg / Kg	1	0.005		02/22/01
X0158	XG.2001.220-8	108-38-3/106-42	p/m-Xylenes	ND	mg / Kg	1	0.01		02/22/01
X0158	XG.2001.220-8	108-88-3	Toluene	ND	mg / Kg	1	0.005		02/22/01
X0158-033		**SW846 5030A/8021B Purgeable VOCs by GC/PID**							
X0158	XG.2001.255-1	71-43-2	Benzene	ND	mg / Kg	1	0.005		03/01/01
X0158	XG.2001.255-1	100-41-4	Ethylbenzene	ND	mg / Kg	1	0.005		03/01/01
X0158	XG.2001.255-1	95-47-6	o-Xylene	ND	mg / Kg	1	0.005		03/01/01
X0158	XG.2001.255-1	108-38-3/106-42	p/m-Xylenes	ND	mg / Kg	1	0.01		03/01/01
X0158	XG.2001.255-1	108-88-3	Toluene	ND	mg / Kg	1	0.005		03/01/01

QC Type **MS: Matrix Spike** QC Matrix **SOLID**

QC Group	Run Sequence	CAS #	Analyte	Result	Units	Dilution Factor	Detection Limit	Code	Run Date
X0148-005		**SW846 ME/8015A Diesel Range Organics by GC/FID**							
X0148	XG.2001.169-5		Diesel Range Organics	99	% Recovery	1	NA		02/07/01
X0150-006		**SW846 5030A/8015A GRO by GC/FID**							
X0150	XG.2001.174-6		Gasoline Range Organics	94	% Recovery	1	NA		02/07/01
X0158-006		**SW846 5030A/8021B Purgeable VOCs by GC/PID**							
X0158	XG.2001.210-6	71-43-2	Benzene	108	% Recovery	1	NA		02/20/01
X0158	XG.2001.210-6	100-41-4	Ethylbenzene	104	% Recovery	1	NA		02/20/01
X0158	XG.2001.210-6	95-47-6	o-Xylene	108	% Recovery	1	NA		02/20/01
X0158	XG.2001.210-6	108-38-3/106-42	p/m-Xylenes	107	% Recovery	1	NA		02/20/01
X0158	XG.2001.210-6	108-88-3	Toluene	106	% Recovery	1	NA		02/20/01

Quality Control Summary

RECEIVED

Client: **CH2MHILL**

Project: **0102307** **160660.02.FF.SA**

Explanation of codes

D	*Not applicable due to sample diluti*
L	*Not applicable due to MDL proxim*

QC Type **MSD: Matrix Spike Duplicate Accuracy** QC Matrix **SOLID**

QC Group	Run Sequence	CAS #	Analyte	Result	Units	Dilution Factor	Detection Limit	Code	Run Date
X0148-006		**SW846 ME/8015A Diesel Range Organics by GC/FID**							
X0148	XG.2001.169-6		Diesel Range Organics	96	% Recovery	1	NA		02/07/0
X0150-007		**SW846 5030A/8015A GRO by GC/FID**							
X0150	XG.2001.174-7		Gasoline Range Organics	92	% Recovery	1	NA		02/07/0
X0158-007		**SW846 5030A/8021B Purgeable VOCs by GC/PID**							
X0158	XG.2001.210-7	71-43-2	Benzene	104	% Recovery	1	NA		02/20/0
X0158	XG.2001.210-7	100-41-4	Ethylbenzene	102	% Recovery	1	NA		02/20/0
X0158	XG.2001.210-7	95-47-6	o-Xylene	105	% Recovery	1	NA		02/20/01
X0158	XG.2001.210-7	108-38-3/106-42	p/m-Xylenes	105	% Recovery	1	NA		02/20/01
X0158	XG.2001.210-7	108-88-3	Toluene	103	% Recovery	1	NA		02/20/01

QC Type **MSD: Matrix Spike Duplicate Precision** QC Matrix **SOLID**

QC Group	Run Sequence	CAS #	Analyte	Result	Units	Dilution Factor	Detection Limit	Code	Run Date
X0148-006		**SW846 ME/8015A Diesel Range Organics by GC/FID**							
X0148	XG.2001.169-6		Diesel Range Organics	3	RPD	1	NA		02/07/01
X0150-007		**SW846 5030A/8015A GRO by GC/FID**							
X0150	XG.2001.174-7		Gasoline Range Organics	3	RPD	1	NA		02/07/01
X0158-007		**SW846 5030A/8021B Purgeable VOCs by GC/PID**							
X0158	XG.2001.210-7	71-43-2	Benzene	3	RPD	1	NA		02/20/01
X0158	XG.2001.210-7	100-41-4	Ethylbenzene	2	RPD	1	NA		02/20/01
X0158	XG.2001.210-7	95-47-6	o-Xylene	3	RPD	1	NA		02/20/01
X0158	XG.2001.210-7	108-38-3/106-42	p/m-Xylenes	2	RPD	1	NA		02/20/01
X0158	XG.2001.210-7	108-88-3	Toluene	3	RPD	1	NA		02/20/01

Assaigai Analytical Laboratories, Inc.

Surrogate Summary: QC

Client: CH2MHILL

Project: 0102307 160660.02.FF.SA

QC Type: **LCS** QC Matrix: **SOLID**

QC Group	Run Sequence	CAS #	Analyte	Result	Units	Dilution Factor	Detection Limit	Code	Run Date
X0148-002		DRO							
X0148	XG.2001.169-2	NA	O-terphenyl	102	% Recovery	1	NA		02/07/01
X0158-002		BTEXALL							
X0158	XG.2001.210-2	NA	4-Bromofluorobenzene	98	% Recovery	1	NA		02/15/01
X0158	XG.2001.210-2	NA	aaa-Trifluorotoluene	100	% Recovery	1	NA		02/15/01

QC Type: **LCSD** QC Matrix: **SOLID**

QC Group	Run Sequence	CAS #	Analyte	Result	Units	Dilution Factor	Detection Limit	Code	Run Date
X0148-003		DRO							
X0148	XG.2001.169-3	NA	O-terphenyl	104	% Recovery	1	NA		02/07/01
X0150-003		GRO							
X0150	XG.2001.174-3	NA	4-Bromofluorobenzene-FID	100	% Recovery	1	NA		02/07/01
X0150	XG.2001.174-3	NA	4-Bromofluorobenzene-PID	ND	% Recovery	1	NA		02/07/01
X0150	XG.2001.174-3	NA	aaa-Trifluorotoluene-FID	107	% Recovery	1	NA		02/07/01
X0150	XG.2001.174-3	NA	aaa-Trifluorotoluene-PID	ND	% Recovery	1	NA		02/07/01
X0158-003		BTEXALL							
X0158	XG.2001.210-3	NA	4-Bromofluorobenzene	100	% Recovery	1	NA		02/15/01
X0158	XG.2001.210-3	NA	aaa-Trifluorotoluene	99	% Recovery	1	NA		02/15/01

QC Type: **MB** QC Matrix: **SOLID**

QC Group	Run Sequence	CAS #	Analyte	Result	Units	Dilution Factor	Detection Limit	Code	Run Date
X0148-001		DRO							
X0148	XG.2001.169-1	NA	O-terphenyl	92	% Recovery	1	NA		02/07/01
X0148-008		DRO							
X0148	XG.2001.175-1	NA	O-terphenyl	92	% Recovery	1	NA		02/08/01
X0148-011		DRO							
X0148	XG.2001.182-1	NA	O-terphenyl	90	% Recovery	1	NA		02/09/01
X0148-013		DRO							
X0148	XG.2001.194-1	NA	O-terphenyl	87	% Recovery	1	NA		02/14/01
X0148-017		DRO							
X0148	XG.2001.213-1	NA	O-terphenyl	88	% Recovery	1	NA		02/21/01

Surrogate Summary: QC

Client: **CH2MHILL**

Project: **0102307** **160660.02.FF.SA**

X0148-025		DRO							
X0148	XG.2001.239-1	NA	O-terphenyl	88	% Recovery	1	NA		02/27/0
X0148-026		DRO							
X0148	XG.2001.247-1	NA	O-terphenyl	81	% Recovery	1	NA		02/28/0
X0150-001		GRO							
X0150	XG.2001.174-1	NA	4-Bromofluorobenzene-FID	87	% Recovery	1	NA		02/07/0
X0150	XG.2001.174-1	NA	4-Bromofluorobenzene-PID	ND	% Recovery	1	NA		02/07/0
X0150	XG.2001.174-1	NA	aaa-Trifluorotoluene-FID	102	% Recovery	1	NA		02/07/0
X0150	XG.2001.174-1	NA	aaa-Trifluorotoluene-PID	ND	% Recovery	1	NA		02/07/0
X0150-008		GRO							
X0150	XG.2001.183-1	NA	4-Bromofluorobenzene-FID	87	% Recovery	1	NA		02/09/0
X0150	XG.2001.183-1	NA	4-Bromofluorobenzene-PID	ND	% Recovery	1	NA		02/09/0
X0150	XG.2001.183-1	NA	aaa-Trifluorotoluene-FID	105	% Recovery	1	NA		02/09/0
X0150	XG.2001.183-1	NA	aaa-Trifluorotoluene-PID	ND	% Recovery	1	NA		02/09/01
X0150-010		GRO							
X0150	XG.2001.192-1	NA	4-Bromofluorobenzene-FID	90	% Recovery	1	NA		02/13/01
X0150	XG.2001.192-1	NA	4-Bromofluorobenzene-PID	ND	% Recovery	1	NA		02/13/01
X0150	XG.2001.192-1	NA	aaa-Trifluorotoluene-FID	105	% Recovery	1	NA		02/13/01
X0150	XG.2001.192-1	NA	aaa-Trifluorotoluene-PID	ND	% Recovery	1	NA		02/13/01
X0150-014		GRO							
X0150	XG.2001.214-1	NA	4-Bromofluorobenzene-FID	88	% Recovery	1	NA		02/21
X0150	XG.2001.214-1	NA	4-Bromofluorobenzene-PID	28	% Recovery	1	NA		02/21
X0150	XG.2001.214-1	NA	aaa-Trifluorotoluene-FID	102	% Recovery	1	NA		02/21/01
X0150	XG.2001.214-1	NA	aaa-Trifluorotoluene-PID	17	% Recovery	1	NA		02/21/01
X0150-024		GRO							
X0150	XG.2001.238-1	NA	4-Bromofluorobenzene-FID	90	% Recovery	1	NA		02/27/01
X0150	XG.2001.238-1	NA	4-Bromofluorobenzene-PID	437	% Recovery	1	NA		02/27/01
X0150	XG.2001.238-1	NA	aaa-Trifluorotoluene-FID	104	% Recovery	1	NA		02/27/01
X0150	XG.2001.238-1	NA	aaa-Trifluorotoluene-PID	116	% Recovery	1	NA		02/27/01
X0150-027		GRO							
X0150	XG.2001.246-1	NA	4-Bromofluorobenzene-FID	88	% Recovery	1	NA		02/28/01
X0150	XG.2001.246-1	NA	4-Bromofluorobenzene-PID	ND	% Recovery	1	NA		02/28/01
X0150	XG.2001.246-1	NA	aaa-Trifluorotoluene-FID	101	% Recovery	1	NA		02/28/01
X0150	XG.2001.246-1	NA	aaa-Trifluorotoluene-PID	77	% Recovery	1	NA		02/28/01
X0158-001		BTEXALL							
X0158	XG.2001.210-1	NA	4-Bromofluorobenzene	98	% Recovery	1	NA		02/15/01
X0158	XG.2001.210-1	NA	aaa-Trifluorotoluene	100	% Recovery	1	NA		02/15/01
X0158-004		BTEXALL							
X0158	XG.2001.210-4	NA	4-Bromofluorobenzene	100	% Recovery	1	NA		02/20/01
X0158	XG.2001.210-4	NA	aaa-Trifluorotoluene	100	% Recovery	1	NA		02/20/01
X0158-017		BTEXALL							
X0158	XG.2001.220-1	NA	4-Bromofluorobenzene	98	% Recovery	1	NA		02/21/01
X0158	XG.2001.220-1	NA	aaa-Trifluorotoluene	100	% Recovery	1	NA		02/21/01
X0158-027		BTEXALL							
X0158	XG.2001.220-8	NA	4-Bromofluorobenzene	98	% Recovery	1	NA		02/22

Surrogate Summary: QC

Client: **CH2MHILL**

Project: **0102307** **160660.02.FF.SA**

X0158	XG.2001.220-8	NA	aaa-Trifluorotoluene	100	% Recovery	1	NA		02/22/01
X0158-033		BTEXALL							
X0158	XG.2001.255-1	NA	4-Bromofluorobenzene	97	% Recovery	1	NA		03/01/01
X0158	XG.2001.255-1	NA	aaa-Trifluorotoluene	99	% Recovery	1	NA		03/01/01

QC Type **MS** QC Matrix **SOLID**

QC Group	Run Sequence	CAS #	Analyte	Result	Units	Dilution Factor	Detection Limit	Code	Run Date
X0148-005		DRO							
X0148	XG.2001.169-5	NA	O-terphenyl	107	% Recovery	1	NA		02/07/01
X0150-006		GRO							
X0150	XG.2001.174-6	NA	4-Bromofluorobenzene-FID	114	% Recovery	1	NA		02/07/01
X0150	XG.2001.174-6	NA	4-Bromofluorobenzene-PID	ND	% Recovery	1	NA		02/07/01
X0150	XG.2001.174-6	NA	aaa-Trifluorotoluene-FID	124	% Recovery	1	NA		02/07/01
X0150	XG.2001.174-6	NA	aaa-Trifluorotoluene-PID	ND	% Recovery	1	NA		02/07/01
X0158-006		BTEXALL							
X0158	XG.2001.210-6	NA	4-Bromofluorobenzene	104	% Recovery	1	NA		02/20/01
X0158	XG.2001.210-6	NA	aaa-Trifluorotoluene	104	% Recovery	1	NA		02/20/01

QC Type **MSD** QC Matrix **SOLID**

QC Group	Run Sequence	CAS #	Analyte	Result	Units	Dilution Factor	Detection Limit	Code	Run Date
X0148-006		DRO							
X0148	XG.2001.169-6	NA	O-terphenyl	108	% Recovery	1	NA		02/07/01
X0150-007		GRO							
X0150	XG.2001.174-7	NA	4-Bromofluorobenzene-FID	113	% Recovery	1	NA		02/07/01
X0150	XG.2001.174-7	NA	4-Bromofluorobenzene-PID	ND	% Recovery	1	NA		02/07/01
X0150	XG.2001.174-7	NA	aaa-Trifluorotoluene-FID	125	% Recovery	1	NA		02/07/01
X0150	XG.2001.174-7	NA	aaa-Trifluorotoluene-PID	ND	% Recovery	1	NA		02/07/01
X0158-007		BTEXALL							
X0158	XG.2001.210-7	NA	4-Bromofluorobenzene	103	% Recovery	1	NA		02/20/01
X0158	XG.2001.210-7	NA	aaa-Trifluorotoluene	104	% Recovery	1	NA		02/20/01

Assaigai Analytical Laboratories, Inc.

Surrogate Summary: Fraction

Client: **CH2MHILL**

Project: **0102307** **160660.02.FF.SA**

Client Sample ID **ST106 SB29A 270'** Sample Matrix **SOIL**

QC Group	Run Sequence	CAS #	Analyte	Result	Units	Dilution Factor	Detection Limit	Code	Run Date
0102307-01A		GRO							X0150-029
X0150	XG.2001.246-3	NA	4-Bromofluorobenzene-FID	90	% Recovery	1	NA		02/28/01
X0150	XG.2001.246-3	NA	4-Bromofluorobenzene-PID	811	% Recovery	1	NA		02/28/01
X0150	XG.2001.246-3	NA	aaa-Trifluorotoluene-FID	103	% Recovery	1	NA		02/28/01
X0150	XG.2001.246-3	NA	aaa-Trifluorotoluene-PID	145	% Recovery	1	NA		02/28/01
0102307-01B		DRO							X0148-029
X0148	XG.2001.247-4	NA	O-terphenyl	88	% Recovery	1	NA		02/28/01

Client Sample ID **ST106 SB29A 290** Sample Matrix **SOIL**

QC Group	Run Sequence	CAS #	Analyte	Result	Units	Dilution Factor	Detection Limit	Code	Run Date
0102307-02A		GRO							X0150-030
X0150	XG.2001.246-4	NA	4-Bromofluorobenzene-FID	95	% Recovery	1	NA		02/28/01
X0150	XG.2001.246-4	NA	4-Bromofluorobenzene-PID	ND	% Recovery	1	NA		02/2[illegible]
X0150	XG.2001.246-4	NA	aaa-Trifluorotoluene-FID	105	% Recovery	1	NA		02/2[illegible]
X0150	XG.2001.246-4	NA	aaa-Trifluorotoluene-PID	494	% Recovery	1	NA		02/28/01
0102307-02B		DRO							X0148-028
X0148	XG.2001.247-3	NA	O-terphenyl	84	% Recovery	1	NA		02/28/01
0102307-02C		BTEXALL							X0158-036
X0158	XG.2001.255-4	NA	4-Bromofluorobenzene	100	% Recovery	1	NA		03/01/01
X0158	XG.2001.255-4	NA	aaa-Trifluorotoluene	99	% Recovery	1	NA		03/01/01

Client Sample ID **ST106 SB29A** Sample Matrix **SOIL**

QC Group	Run Sequence	CAS #	Analyte	Result	Units	Dilution Factor	Detection Limit	Code	Run Date
0102307-03A		GRO							X0150-028
X0150	XG.2001.246-2	NA	4-Bromofluorobenzene-FID	95	% Recovery	1	NA		02/28/01
X0150	XG.2001.246-2	NA	4-Bromofluorobenzene-PID	157	% Recovery	1	NA		02/28/01
X0150	XG.2001.246-2	NA	aaa-Trifluorotoluene-FID	105	% Recovery	1	NA		02/28/01
X0150	XG.2001.246-2	NA	aaa-Trifluorotoluene-PID	63	% Recovery	1	NA		02/28/01
0102307-03B		DRO							X0148-027
X0148	XG.2001.247-2	NA	O-terphenyl	91	% Recovery	1	NA		02/28/01

AS[illegible]GAI ANALYTICAL LABORATORIES, INC.

Chain of Custo[illegible]y Record

7300 JEFFERSON N.E.
ALBUQUERQUE, NEW MEXICO 87109
(505) 345-8964

3332 WEDGEWOOD
EL PASO, TEXAS 79925
(915) 593-6000

127 EASTGATE DRIVE, 212-C
LOS ALAMOS, NEW MEXICO 87544
(505) 662-2558

Lab job No.: 0102307 Date 2-27

Page 1 of 1

Client: CH2M HILL

Address: 6001 INDIAN SCHOOL RD NE #350

City / State / Zip: ABQ NM 87110

Project Name / Number: KAFB ITO-10

Contract / Purchase Order / Quote

Project Manager / Contact: Halloran LeFevre

Telephone No.: [illegible]4 5600

Fax No.: 883 7507

Samplers: (signature)

AAL Fraction Number	Field Sample Number / Location	Date	Time	Sample Type	Type / Size of Container	Preservation Temp.	Preservation Chemical	No. of Containers	GRO	DRO	BTEX									Remarks
[illegible]	ST106 SB29A 270'	2 26	1625	Soil	4oz	ice	-	2	X	X										
[illegible]	ST106 SB29A 290	2-27	1530	Soil	4oz	ice	-	2	X	X	X									
[illegible]	ST106 SB29A	2-27		Soil	4oz	ice	-	2	X	X										

Analysis Required

Relinquished by:	Date	Received by:	Relinquished by:	Date	Received by:
Signature [illegible]	2-27/01	Signature [illegible]	Signature		Signature
Printed Lon LeFevre	Time 1731	Printed M Wroe	Printed	Time	Printed
Company CH2MHILL		Company AAL	Company		Company
Reason DROP @ LAB		Reason analysis	Reason		Reason

RECEIVED MAR 1 2 2001

Method of Shipment:

Shipment No.

Special Instructions:

Comments: 24hr TAT on GRO/DRO

After analysis, samples are to be:

- ☐ Disposed of (additional fee)
- ☐ Stored (30 days max)
- ☐ Stored over 30 days (additional fee)
- ☐ Returned to customer

COURIER

ASSAIGAI
ANALYTICAL
LABORATORIES, INC.
7300 Jefferson, NE • Albuquerque, New Mexico 87109 • (505) 345-8964 • FAX (505) 345-7259
3332 Wedgewood Dr., Suite N • El Paso, Texas 79925 • (915) 593-6000 • FAX (915) 593-7820
127 Eastgate Drive, 212-C • Los Alamos, New Mexico 87544 • (505) 662-255

RECEIVED

Explanation of codes

B	*analyte detected in Method Blank*
E	*result is estimated*
H	*analyzed out of hold time*
N	*tentatively identified compound*
S	*subcontracted*
1-9	*see footnote*

CH2MHILL
attn: **AMY HALLORAN**
6001 INDIAN SCHOOL RD NE STE 350
ALBUQUERQUE, NM 87110-4140

Assaigai Analytical Laboratories, Inc.

Certificate of Analysis

Client: **CH2MHILL**
Project: **0101237** **160660.02.FF.SA**

William P. Biava: President of Assaigai Analytical Laboratories, Inc.

Client Sample ID ***SB-30-40'*** Sample Matrix ***SOIL*** Sample Collected ***01/24/01 14:05:00***

QC Group	Run Sequence	CAS #	Analyte	Result	Units	Dilution Factor	Detection Limit	Code	Run Date
0101237-01A		**SW846 5030A/8015A GRO by GC/FID**							
X0114	XG.2001.120-2		Gasoline Range Organics	ND	mg / Kg	1	0.25		01/26/01
0101237-01B		**SW846 ME/8015A Diesel Range Organics by GC/FID**							
X018	XG.2001.121-2		Diesel Range Organics	ND	mg / Kg	1	25		01/26/01

Client Sample ID ***SB-30-110'*** Sample Matrix ***SOIL*** Sample Collected ***01/25/01 16:20:00***

QC Group	Run Sequence	CAS #	Analyte	Result	Units	Dilution Factor	Detection Limit	Code	Run Date
0101237-02A		**SW846 5030A/8015A GRO by GC/FID**							
X0114	XG.2001.120-3		Gasoline Range Organics	ND	mg / Kg	1	0.25		01/26/01
0101237-02B		**SW846 ME/8015A Diesel Range Organics by GC/FID**							
X018	XG.2001.121-3		Diesel Range Organics	ND	mg / Kg	1	25		01/26/01
0101237-02C		**SW846 8260A Purgeable VOCs by GC/MS**							
X0127	XG.2001.124-2	75-34-3	1,1 Dichloroethane	ND	mg / Kg	1	0.005		01/29/01
X0127	XG.2001.124-2	75-34-3	1,1 Dichloroethene	ND	mg / Kg	1	0.005		01/29/01
X0127	XG.2001.124-2	71-55-6	1,1,1 Trichloroethane	ND	mg / Kg	1	0.005		01/29/01
[illegible]27	XG.2001.124-2	630-20-6	1,1,1,2 Tetrachloroethane	ND	mg / Kg	1	0.005		01/29/01
[illegible]27	XG.2001.124-2	79-00-5	1,1,2 Trichloroethane	ND	mg / Kg	1	0.005		01/29/01

Member
American Council of
Independent Laboratories, Inc.

REPRODUCTION OF THIS REPORT IN LESS THAN FULL REQUIRES THE WRITTEN CONSENT OF AAL
THIS REPORT MAY NOT BE USED IN ANY MANNER BY THE CLIENT OR ANY OTHER THIRD PARTY TO CLAIM
PRODUCT ENDORSEMENT BY ANY ACCREDITATION PROGRAM

Certificate of Analysis

Client: **CH2MHILL**

Project: **0101237** **160660.02.FF.SA**

X0127	XG.2001.124-2	79-34-5	1,1,2,2 Tetrachloroethane	ND	mg / Kg	1	0.005	01/29/0 1
X0127	XG.2001.124-2	106-93-4	1,2 Dibromoethane (EDB)	ND	mg / Kg	1	0.005	01/29/0 1
X0127	XG.2001.124-2	95-50-1	1,2 Dichlorobenzene	ND	mg / Kg	1	0.005	01/29/0 1
X0127	XG.2001.124-2	107-06-2	1,2 Dichloroethane	ND	mg / Kg	1	0.005	01/29/0 1
X0127	XG.2001.124-2	78-87-5	1,2 Dichloropropane	ND	mg / Kg	1	0.005	01/29/0 1
X0127	XG.2001.124-2	96-18-4	1,2,3 Trichloropropane	ND	mg / Kg	1	0.005	01/29/0 1
X0127	XG.2001.124-2	95-63-6	1,2,4-Trimethylbenzene	ND	mg / Kg	1	0.005	01/29/0 1
X0127	XG.2001.124-2	541-73-1	1,3 Dichlorobenzene	ND	mg / Kg	1	0.005	01/29/0 1
X0127	XG.2001.124-2	108-67-8	1,3,5-Trimethylbenzene	ND	mg / Kg	1	0.005	01/29/0 1
X0127	XG.2001.124-2	764-41-0	1,4 Dichloro-2-butene	ND	mg / Kg	1	0.05	01/29/01
X0127	XG.2001.124-2	106-46-7	1,4 Dichlorobenzene	ND	mg / Kg	1	0.005	01/29/01
X0127	XG.2001.124-2	78-93-3	2-Butanone (MEK)	ND	mg / Kg	1	0.025	01/29/01
X0127	XG.2001.124-2	110-75-8	2-Chloroethylvinylether	ND	mg / Kg	1	0.025	01/29/01
X0127	XG.2001.124-2	591-78-6	2-Hexanone (MBK)	ND	mg / Kg	1	0.025	01/29/01
X0127	XG.2001.124-2	108-10-1	4-Methyl-2-pentanone (MIBK)	ND	mg / Kg	1	0.025	01/29/01
X0127	XG.2001.124-2	67-64-1	Acetone	ND	mg / Kg	1	0.05	01/29/01
X0127	XG.2001.124-2	107-02-8	Acrolein	ND	mg / Kg	1	0.1	01/29/01
X0127	XG.2001.124-2	107-13-1	Acrylonitrile	ND	mg / Kg	1	0.1	01/29/01
X0127	XG.2001.124-2	71-43-2	Benzene	ND	mg / Kg	1	0.005	01/29/01
X0127	XG.2001.124-2	75-27-4	Bromodichloromethane	ND	mg / Kg	1	0.005	01/29/01
X0127	XG.2001.124-2	75-25-2	Bromoform	ND	mg / Kg	1	0.005	01/29/01
X0127	XG.2001.124-2	74-83-9	Bromomethane	ND	mg / Kg	1	0.025	01/29/01
X0127	XG.2001.124-2	75-15-0	Carbon disulfide	ND	mg / Kg	1	0.025	01/29
X0127	XG.2001.124-2	56-23-5	Carbon tetrachloride	ND	mg / Kg	1	0.005	01/29
X0127	XG.2001.124-2	108-90-7	Chlorobenzene	ND	mg / Kg	1	0.005	01/29/01
X0127	XG.2001.124-2	124-48-1	Chlorodibromomethane	ND	mg / Kg	1	0.005	01/29/01
X0127	XG.2001.124-2	75-00-3	Chloroethane	ND	mg / Kg	1	0.025	01/29/01
X0127	XG.2001.124-2	67-66-3	Chloroform	ND	mg / Kg	1	0.005	01/29/01
X0127	XG.2001.124-2	74-87-3	Chloromethane	ND	mg / Kg	1	0.025	01/29/01
X0127	XG.2001.124-2	156-59-2	cis-1,2 dichloroethene	ND	mg / Kg	1	0.005	01/29/01
X0127	XG.2001.124-2	10061-01-5	cis-1,3 dichloropropene	ND	mg / Kg	1	0.005	01/29/01
X0127	XG.2001.124-2	74-95-3	Dibromomethane	ND	mg / Kg	1	0.005	01/29/01
X0127	XG.2001.124-2	97-63-2	Ethyl methacrylate	ND	mg / Kg	1	0.025	01/29/01
X0127	XG.2001.124-2	100-41-4	Ethylbenzene	ND	mg / Kg	1	0.005	01/29/01
X0127	XG.2001.124-2		Freon 113	ND	mg / Kg	1	0.025	01/29/01
X0127	XG.2001.124-2	75-71-8	Freon 12	ND	mg / Kg	1	0.05	01/29/01
X0127	XG.2001.124-2	74-88-4	Iodomethane	ND	mg / Kg	1	0.025	01/29/01
X0127	XG.2001.124-2	1634-04-4	Methyl t-butyl ether (MTBE)	ND	mg / Kg	1	0.005	01/29/01
X0127	XG.2001.124-2	75-09-2	Methylene chloride	ND	mg / Kg	1	0.05	01/29/01
X0127	XG.2001.124-2	91-20-3	Naphthalene	ND	mg / Kg	1	0.025	01/29/0
X0127	XG.2001.124-2	95-47-6	o-Xylene	ND	mg / Kg	1	0.005	01/29/0
X0127	XG.2001.124-2	108-38-3/106-42	p/m Xylenes	ND	mg / Kg	1	0.01	01/29/0
X0127	XG.2001.124-2	100-42-5	Styrene	ND	mg / Kg	1	0.005	01/29/0
X0127	XG.2001.124-2	156-60-5	t-1,2 Dichloroethene	ND	mg / Kg	1	0.005	01/29/0
X0127	XG.2001.124-2	10061-02-6	t-1,3 Dichloropropene	ND	mg / Kg	1	0.005	01/29/0
X0127	XG.2001.124-2	127-18-4	Tetrachloroethene	ND	mg / Kg	1	0.005	01/29/0
X0127	XG.2001.124-2	108-88-3	Toluene	ND	mg / Kg	1	0.005	01/29/0
X0127	XG.2001.124-2	79-01-6	Trichloroethene	ND	mg / Kg	1	0.005	01/29

Certificate of Analysis

Client: **CH2MHILL**

Project: **0101237** **160660.02.FF.SA**

X0127	XG.2001.124-2	75-69-4	Trichlorofluoromethane	ND	mg / Kg	1	0.025		01/29/01
X0127	XG.2001.124-2	108-05-4	Vinyl acetate	ND	mg / Kg	1	0.025		01/29/01
X0127	XG.2001.124-2	75-01-4	Vinyl chloride	ND	mg / Kg	1	0.025		01/29/01

Client Sample ID ***SB-30-160*** Sample Matrix ***SOIL*** Sample Collected ***01/26/01 09:14:00***

QC Group	Run Sequence	CAS #	Analyte	Result	Units	Dilution Factor	Detection Limit	Code	Run Date
0101237-03A		**SW846 5030A/8015A GRO by GC/FID**							
X0114	XG.2001.120-4		Gasoline Range Organics	ND	mg / Kg	1	0.25		01/26/01
0101237-03B		**SW846 ME/8015A Diesel Range Organics by GC/FID**							
X018	XG.2001.121-4		Diesel Range Organics	31	mg / Kg	1	25		01/26/01

**** Sample specific Detection Limit is determined by multiplying the sample Dilution Factor by the listed Reporting Detection Limit. ****

**** ND = Not detected: less than the sample specific Detection Limit. Results relate only to the items tested. ****

Assaigai Analytical Laboratories, Inc.

Quality Control Summary

Client: **CH2MHILL**

Project: **0101237** **160660.02.FF.SA**

Explanation of codes	
D	*Not applicable due to sample dilution*
L	*Not applicable due to MDL proximity*

QC Type **LCS: Lab Control Spike** QC Matrix **SOLID**

QC Group	Run Sequence	CAS #	Analyte	Result	Units	Dilution Factor	Detection Limit	Code	Run Date
X0114-002		**SW846 5030A/8015A GRO by GC/FID**							
X0114	XG.2001.43-2		Gasoline Range Organics	110	% Recovery	1	NA		01/09/01
X0127-005		**SW846 8260A Purgeable VOCs by GC/MS**							
X0127	XG.2001.69-5	75-34-3	1,1 Dichloroethene	109	% Recovery	1	NA		01/18/01
X0127	XG.2001.69-5	106-46-7	1,4 Dichlorobenzene	100	% Recovery	1	NA		01/18/01
X0127	XG.2001.69-5	71-43-2	Benzene	113	% Recovery	1	NA		01/18/01
X0127	XG.2001.69-5	108-90-7	Chlorobenzene	106	% Recovery	1	NA		01/18/01
X0127	XG.2001.69-5	108-88-3	Toluene	108	% Recovery	1	NA		01/18/01
X0127	XG.2001.69-5	79-01-6	Trichloroethene	111	% Recovery	1	NA		01/18/01
X018-002		**SW846 ME/8015A Diesel Range Organics by GC/FID**							
X018	XG.2001.41-2		Diesel Range Organics	94	% Recovery	1	NA		01/09/01

QC Type **LCSD: Lab Control Spike Duplicate Accuracy** QC Matrix **SOLID**

QC Group	Run Sequence	CAS #	Analyte	Result	Units	Dilution Factor	Detection Limit	Code	Run Date
X0114-003		**SW846 5030A/8015A GRO by GC/FID**							
X0114	XG.2001.43-3		Gasoline Range Organics	106	% Recovery	1	NA		01/09/01
X0127-006		**SW846 8260A Purgeable VOCs by GC/MS**							
X0127	XG.2001.69-6	75-34-3	1,1 Dichloroethene	110	% Recovery	1	NA		01/18/01
X0127	XG.2001.69-6	106-46-7	1,4 Dichlorobenzene	108	% Recovery	1	NA		01/18/01
X0127	XG.2001.69-6	71-43-2	Benzene	115	% Recovery	1	NA		01/18/01
X0127	XG.2001.69-6	108-90-7	Chlorobenzene	113	% Recovery	1	NA		01/18/01
X0127	XG.2001.69-6	108-88-3	Toluene	113	% Recovery	1	NA		01/18/01
X0127	XG.2001.69-6	79-01-6	Trichloroethene	116	% Recovery	1	NA		01/18/01
X018-003		**SW846 ME/8015A Diesel Range Organics by GC/FID**							
X018	XG.2001.41-3		Diesel Range Organics	104	% Recovery	1	NA		01/09/01

QC Type **LCSD: Lab Control Spike Duplicate Precision** QC Matrix **SOLID**

QC Group	Run Sequence	CAS #	Analyte	Result	Units	Dilution Factor	Detection Limit	Code	Run Date
X0114-003		**SW846 5030A/8015A GRO by GC/FID**							
X0114	XG.2001.43-3		Gasoline Range Organics	4	RPD	1	NA		01/09/01
X0127-006		**SW846 8260A Purgeable VOCs by GC/MS**							
X0127	XG.2001.69-6	75-34-3	1,1 Dichloroethene	< 1	RPD	1	NA		01/18/01
X0127	XG.2001.69-6	106-46-7	1,4 Dichlorobenzene	7	RPD	1	NA		01/18/01
X0127	XG.2001.69-6	71-43-2	Benzene	2	RPD	1	NA		01/18/01

Quality Control Summary

Client: **CH2MHILL**

Project: **0101237** **160660.02.FF.SA**

Explanation of codes

D	*Not applicable due to sample dilut*
L	*Not applicable due to MDL proxim*

X0127	XG.2001.69-6	108-90-7	Chlorobenzene	7	RPD	1	NA		01/18/0
X0127	XG.2001.69-6	108-88-3	Toluene	5	RPD	1	NA		01/18/0
X0127	XG.2001.69-6	79-01-6	Trichloroethene	4	RPD	1	NA		01/18/0
X018-003		**SW846 ME/8015A Diesel Range Organics by GC/FID**							
X018	XG.2001.41-3		Diesel Range Organics	10	RPD	1	NA		01/09/0

QC Type **MB: Method Blank** QC Matrix **SOLID**

QC Group	Run Sequence	CAS #	Analyte	Result	Units	Dilution Factor	Detection Limit	Code	Run Date
X0114-001		**SW846 5030A/8015A GRO by GC/FID**							
X0114	XG.2001.43-1		Gasoline Range Organics	ND	mg / Kg	1	0.25		01/09/01
X0114-010		**SW846 5030A/8015A GRO by GC/FID**							
X0114	XG.2001.56-1		Gasoline Range Organics	ND	mg / Kg	1	0.25		01/10/01
X0114-014		**SW846 5030A/8015A GRO by GC/FID**							
X0114	XG.2001.120-1		Gasoline Range Organics	ND	mg / Kg	1	0.25		01/26/01
X0127-001		**SW846 8260A Purgeable VOCs by GC/MS**							
X0127	XG.2001.69-1	75-34-3	1,1 Dichloroethane	ND	mg / Kg	1	0.005		01/18/01
X0127	XG.2001.69-1	75-34-3	1,1 Dichloroethene	ND	mg / Kg	1	0.005		01/18/01
X0127	XG.2001.69-1	71-55-6	1,1,1 Trichloroethane	ND	mg / Kg	1	0.005		01/18/0
X0127	XG.2001.69-1	630-20-6	1,1,1,2 Tetrachloroethane	ND	mg / Kg	1	0.005		01/18
X0127	XG.2001.69-1	79-00-5	1,1,2 Trichloroethane	ND	mg / Kg	1	0.005		01/18/01
X0127	XG.2001.69-1	79-34-5	1,1,2,2 Tetrachloroethane	ND	mg / Kg	1	0.005		01/18/01
X0127	XG.2001.69-1	106-93-4	1,2 Dibromoethane (EDB)	ND	mg / Kg	1	0.005		01/18/01
X0127	XG.2001.69-1	95-50-1	1,2 Dichlorobenzene	ND	mg / Kg	1	0.005		01/18/01
X0127	XG.2001.69-1	107-06-2	1,2 Dichloroethane	ND	mg / Kg	1	0.005		01/18/01
X0127	XG.2001.69-1	78-87-5	1,2 Dichloropropane	ND	mg / Kg	1	0.005		01/18/01
X0127	XG.2001.69-1	96-18-4	1,2,3 Trichloropropane	ND	mg / Kg	1	0.005		01/18/01
X0127	XG.2001.69-1	95-63-6	1,2,4-Trimethylbenzene	ND	mg / Kg	1	0.005		01/18/01
X0127	XG.2001.69-1	541-73-1	1,3 Dichlorobenzene	ND	mg / Kg	1	0.005		01/18/01
X0127	XG.2001.69-1	108-67-8	1,3,5-Trimethylbenzene	ND	mg / Kg	1	0.005		01/18/01
X0127	XG.2001.69-1	764-41-0	1,4 Dichloro-2-butene	ND	mg / Kg	1	0.05		01/18/01
X0127	XG.2001.69-1	106-46-7	1,4 Dichlorobenzene	ND	mg / Kg	1	0.005		01/18/01
X0127	XG.2001.69-1	78-93-3	2-Butanone (MEK)	ND	mg / Kg	1	0.025		01/18/01
X0127	XG.2001.69-1	110-75-8	2-Chloroethylvinylether	ND	mg / Kg	1	0.025		01/18/01
X0127	XG.2001.69-1	591-78-6	2-Hexanone (MBK)	ND	mg / Kg	1	0.025		01/18/01
X0127	XG.2001.69-1	108-10-1	4-Methyl-2-pentanone (MIBK)	ND	mg / Kg	1	0.025		01/18/01
X0127	XG.2001.69-1	67-64-1	Acetone	ND	mg / Kg	1	0.05		01/18/01
X0127	XG.2001.69-1	107-02-8	Acrolein	ND	mg / Kg	1	0.1		01/18/01
X0127	XG.2001.69-1	107-13-1	Acrylonitrile	ND	mg / Kg	1	0.1		01/18/01
X0127	XG.2001.69-1	71-43-2	Benzene	ND	mg / Kg	1	0.005		01/18/01
X0127	XG.2001.69-1	75-27-4	Bromodichloromethane	ND	mg / Kg	1	0.005		01/18/01
X0127	XG.2001.69-1	75-25-2	Bromoform	ND	mg / Kg	1	0.005		01/18/01
X0127	XG.2001.69-1	74-83-9	Bromomethane	ND	mg / Kg	1	0.025		01/18/01
X0127	XG.2001.69-1	75-15-0	Carbon disulfide	ND	mg / Kg	1	0.025		01/18/01
X0127	XG.2001.69-1	56-23-5	Carbon tetrachloride	ND	mg / Kg	1	0.005		01/18/0
X0127	XG.2001.69-1	108-90-7	Chlorobenzene	ND	mg / Kg	1	0.005		01/18/

Quality Control Summary

Explanation of codes

D	*Not applicable due to sample dilution*
L	*Not applicable due to MDL proximity*

Client: CH2MHILL

Project: 0101237 160660.02.FF.SA

X0127	XG.2001.69-1	124-48-1	Chlorodibromomethane	ND	mg / Kg	1	0.005		01/18/01
X0127	XG.2001.69-1	75-00-3	Chloroethane	ND	mg / Kg	1	0.025		01/18/01
X0127	XG.2001.69-1	67-66-3	Chloroform	ND	mg / Kg	1	0.005		01/18/01
X0127	XG.2001.69-1	74-87-3	Chloromethane	ND	mg / Kg	1	0.025		01/18/01
X0127	XG.2001.69-1	156-59-2	cis-1,2 dichloroethene	ND	mg / Kg	1	0.005		01/18/01
X0127	XG.2001.69-1	10061-01-5	cis-1,3 dichloropropene	ND	mg / Kg	1	0.005		01/18/01
X0127	XG.2001.69-1	74-95-3	Dibromomethane	ND	mg / Kg	1	0.005		01/18/01
X0127	XG.2001.69-1	97-63-2	Ethyl methacrylate	ND	mg / Kg	1	0.025		01/18/01
X0127	XG.2001.69-1	100-41-4	Ethylbenzene	ND	mg / Kg	1	0.005		01/18/01
X0127	XG.2001.69-1		Freon 113	ND	mg / Kg	1	0.025		01/18/01
X0127	XG.2001.69-1	75-71-8	Freon 12	ND	mg / Kg	1	0.05		01/18/01
X0127	XG.2001.69-1	74-88-4	Iodomethane	ND	mg / Kg	1	0.025		01/18/01
X0127	XG.2001.69-1	1634-04-4	Methyl t-butyl ether (MTBE)	ND	mg / Kg	1	0.005		01/18/01
X0127	XG.2001.69-1	75-09-2	Methylene chloride	ND	mg / Kg	1	0.05		01/18/01
X0127	XG.2001.69-1	91-20-3	Naphthalene	ND	mg / Kg	1	0.025		01/18/01
X0127	XG.2001.69-1	95-47-6	o-Xylene	ND	mg / Kg	1	0.005		01/18/01
X0127	XG.2001.69-1	108-38-3/106-42	p/m Xylenes	ND	mg / Kg	1	0.01		01/18/01
X0127	XG.2001.69-1	100-42-5	Styrene	ND	mg / Kg	1	0.005		01/18/01
X0127	XG.2001.69-1	156-60-5	t-1,2 Dichloroethene	ND	mg / Kg	1	0.005		01/18/01
X0127	XG.2001.69-1	10061-02-6	t-1,3 Dichloropropene	ND	mg / Kg	1	0.005		01/18/01
X0127	XG.2001.69-1	127-18-4	Tetrachloroethene	ND	mg / Kg	1	0.005		01/18/01
X0127	XG.2001.69-1	108-88-3	Toluene	ND	mg / Kg	1	0.005		01/18/01
[illegible]	XG.2001.69-1	79-01-6	Trichloroethene	ND	mg / Kg	1	0.005		01/18/01
[illegible]	XG.2001.69-1	75-69-4	Trichlorofluoromethane	ND	mg / Kg	1	0.025		01/18/01
X0127	XG.2001.69-1	108-05-4	Vinyl acetate	ND	mg / Kg	1	0.025		01/18/01
X0127	XG.2001.69-1	75-01-4	Vinyl chloride	ND	mg / Kg	1	0.025		01/18/01
X0127-011		**SW846 8260A Purgeable VOCs by GC/MS**							
X0127	XG.2001.80-1	75-34-3	1,1 Dichloroethane	ND	mg / Kg	1	0.005		01/22/01
X0127	XG.2001.80-1	75-34-3	1,1 Dichloroethene	ND	mg / Kg	1	0.005		01/22/01
X0127	XG.2001.80-1	71-55-6	1,1,1 Trichloroethane	ND	mg / Kg	1	0.005		01/22/01
X0127	XG.2001.80-1	630-20-6	1,1,1,2 Tetrachloroethane	ND	mg / Kg	1	0.005		01/22/01
X0127	XG.2001.80-1	79-00-5	1,1,2 Trichloroethane	ND	mg / Kg	1	0.005		01/22/01
X0127	XG.2001.80-1	79-34-5	1,1,2,2 Tetrachloroethane	ND	mg / Kg	1	0.005		01/22/01
X0127	XG.2001.80-1	106-93-4	1,2 Dibromoethane (EDB)	ND	mg / Kg	1	0.005		01/22/01
X0127	XG.2001.80-1	95-50-1	1,2 Dichlorobenzene	ND	mg / Kg	1	0.005		01/22/01
X0127	XG.2001.80-1	107-06-2	1,2 Dichloroethane	ND	mg / Kg	1	0.005		01/22/01
X0127	XG.2001.80-1	78-87-5	1,2 Dichloropropane	ND	mg / Kg	1	0.005		01/22/01
X0127	XG.2001.80-1	96-18-4	1,2,3 Trichloropropane	ND	mg / Kg	1	0.005		01/22/01
X0127	XG.2001.80-1	95-63-6	1,2,4-Trimethylbenzene	ND	mg / Kg	1	0.005		01/22/01
X0127	XG.2001.80-1	541-73-1	1,3 Dichlorobenzene	ND	mg / Kg	1	0.005		01/22/01
X0127	XG.2001.80-1	108-67-8	1,3,5-Trimethylbenzene	ND	mg / Kg	1	0.005		01/22/01
X0127	XG.2001.80-1	764-41-0	1,4 Dichloro-2-butene	ND	mg / Kg	1	0.05		01/22/01
X0127	XG.2001.80-1	106-46-7	1,4 Dichlorobenzene	ND	mg / Kg	1	0.005		01/22/01
X0127	XG.2001.80-1	78-93-3	2-Butanone (MEK)	ND	mg / Kg	1	0.025		01/22/01
X0127	XG.2001.80-1	110-75-8	2-Chloroethylvinylether	ND	mg / Kg	1	0.025		01/22/01
X0127	XG.2001.80-1	591-78-6	2-Hexanone (MBK)	ND	mg / Kg	1	0.025		01/22/01
X0127	XG.2001.80-1	108-10-1	4-Methyl-2-pentanone (MIBK)	ND	mg / Kg	1	0.025		01/22/01
[illegible]	XG.2001.80-1	67-64-1	Acetone	ND	mg / Kg	1	0.05		01/22/01
[illegible]	XG.2001.80-1	107-02-8	Acrolein	ND	mg / Kg	1	0.1		01/22/01

Quality Control Summary

Client: **CH2MHILL**

Project: **0101237** **160660.02.FF.SA**

Explanation of codes

D *Not applicable due to sample dilut*

L *Not applicable due to MDL proxim*

X0127	XG.2001.80-1	107-13-1	Acrylonitrile	ND	mg / Kg	1	0.1	01/22/01
X0127	XG.2001.80-1	71-43-2	Benzene	ND	mg / Kg	1	0.005	01/22/01
X0127	XG.2001.80-1	75-27-4	Bromodichloromethane	ND	mg / Kg	1	0.005	01/22/01
X0127	XG.2001.80-1	75-25-2	Bromoform	ND	mg / Kg	1	0.005	01/22/01
X0127	XG.2001.80-1	74-83-9	Bromomethane	ND	mg / Kg	1	0.025	01/22/01
X0127	XG.2001.80-1	75-15-0	Carbon disulfide	ND	mg / Kg	1	0.025	01/22/01
X0127	XG.2001.80-1	56-23-5	Carbon tetrachloride	ND	mg / Kg	1	0.005	01/22/01
X0127	XG.2001.80-1	108-90-7	Chlorobenzene	ND	mg / Kg	1	0.005	01/22/01
X0127	XG.2001.80-1	124-48-1	Chlorodibromomethane	ND	mg / Kg	1	0.005	01/22/01
X0127	XG.2001.80-1	75-00-3	Chloroethane	ND	mg / Kg	1	0.025	01/22/01
X0127	XG.2001.80-1	67-66-3	Chloroform	ND	mg / Kg	1	0.005	01/22/01
X0127	XG.2001.80-1	74-87-3	Chloromethane	ND	mg / Kg	1	0.025	01/22/01
X0127	XG.2001.80-1	156-59-2	cis-1,2 dichloroethene	ND	mg / Kg	1	0.005	01/22/01
X0127	XG.2001.80-1	10061-01-5	cis-1,3 dichloropropene	ND	mg / Kg	1	0.005	01/22/01
X0127	XG.2001.80-1	74-95-3	Dibromomethane	ND	mg / Kg	1	0.005	01/22/01
X0127	XG.2001.80-1	97-63-2	Ethyl methacrylate	ND	mg / Kg	1	0.025	01/22/01
X0127	XG.2001.80-1	100-41-4	Ethylbenzene	ND	mg / Kg	1	0.005	01/22/01
X0127	XG.2001.80-1		Freon 113	ND	mg / Kg	1	0.025	01/22/01
X0127	XG.2001.80-1	75-71-8	Freon 12	ND	mg / Kg	1	0.05	01/22/01
X0127	XG.2001.80-1	74-88-4	Iodomethane	ND	mg / Kg	1	0.025	01/22/01
X0127	XG.2001.80-1	1634-04-4	Methyl t-butyl ether (MTBE)	ND	mg / Kg	1	0.005	01/22/01
X0127	XG.2001.80-1	75-09-2	Methylene chloride	ND	mg / Kg	1	0.05	01/22/01
X0127	XG.2001.80-1	91-20-3	Naphthalene	ND	mg / Kg	1	0.025	01/22/01
X0127	XG.2001.80-1	95-47-6	o-Xylene	ND	mg / Kg	1	0.005	01/22/01
X0127	XG.2001.80-1	108-38-3/106-42	p/m Xylenes	ND	mg / Kg	1	0.01	01/22/01
X0127	XG.2001.80-1	100-42-5	Styrene	ND	mg / Kg	1	0.005	01/22/01
X0127	XG.2001.80-1	156-60-5	t-1,2 Dichloroethene	ND	mg / Kg	1	0.005	01/22/01
X0127	XG.2001.80-1	10061-02-6	t-1,3 Dichloropropene	ND	mg / Kg	1	0.005	01/22/01
X0127	XG.2001.80-1	127-18-4	Tetrachloroethene	ND	mg / Kg	1	0.005	01/22/01
X0127	XG.2001.80-1	108-88-3	Toluene	ND	mg / Kg	1	0.005	01/22/01
X0127	XG.2001.80-1	79-01-6	Trichloroethene	ND	mg / Kg	1	0.005	01/22/01
X0127	XG.2001.80-1	75-69-4	Trichlorofluoromethane	ND	mg / Kg	1	0.025	01/22/01
X0127	XG.2001.80-1	108-05-4	Vinyl acetate	ND	mg / Kg	1	0.025	01/22/01
X0127	XG.2001.80-1	75-01-4	Vinyl chloride	ND	mg / Kg	1	0.025	01/22/01
X0127-014		**SW846 8260A Purgeable VOCs by GC/MS**						
X0127	XG.2001.80-3	75-34-3	1,1 Dichloroethane	ND	mg / Kg	1	0.005	01/22/01
X0127	XG.2001.80-3	75-34-3	1,1 Dichloroethene	ND	mg / Kg	1	0.005	01/22/01
X0127	XG.2001.80-3	71-55-6	1,1,1 Trichloroethane	ND	mg / Kg	1	0.005	01/22/01
X0127	XG.2001.80-3	630-20-6	1,1,1,2 Tetrachloroethane	ND	mg / Kg	1	0.005	01/22/01
X0127	XG.2001.80-3	79-00-5	1,1,2 Trichloroethane	ND	mg / Kg	1	0.005	01/22/01
X0127	XG.2001.80-3	79-34-5	1,1,2,2 Tetrachloroethane	ND	mg / Kg	1	0.005	01/22/01
X0127	XG.2001.80-3	106-93-4	1,2 Dibromoethane (EDB)	ND	mg / Kg	1	0.005	01/22/01
X0127	XG.2001.80-3	95-50-1	1,2 Dichlorobenzene	ND	mg / Kg	1	0.005	01/22/01
X0127	XG.2001.80-3	107-06-2	1,2 Dichloroethane	ND	mg / Kg	1	0.005	01/22/01
X0127	XG.2001.80-3	78-87-5	1,2 Dichloropropane	ND	mg / Kg	1	0.005	01/22/01
X0127	XG.2001.80-3	96-18-4	1,2,3 Trichloropropane	ND	mg / Kg	1	0.005	01/22/01
X0127	XG.2001.80-3	95-63-6	1,2,4-Trimethylbenzene	ND	mg / Kg	1	0.005	01/22/01
X0127	XG.2001.80-3	541-73-1	1,3 Dichlorobenzene	ND	mg / Kg	1	0.005	01/22/01
X0127	XG.2001.80-3	108-67-8	1,3,5-Trimethylbenzene	ND	mg / Kg	1	0.005	01/22

Quality Control Summary

Explanation of codes

D	*Not applicable due to sample dilution*
L	*Not applicable due to MDL proximity*

Client: **CH2MHILL**

Project: **0101237** **160660.02.FF.SA**

X0127	XG.2001.80-3	764-41-0	1,4 Dichloro-2-butene	ND	mg / Kg	1	0.05		01/22/01
X0127	XG.2001.80-3	106-46-7	1,4 Dichlorobenzene	ND	mg / Kg	1	0.005		01/22/01
X0127	XG.2001.80-3	78-93-3	2-Butanone (MEK)	ND	mg / Kg	1	0.025		01/22/01
X0127	XG.2001.80-3	110-75-8	2-Chloroethylvinylether	ND	mg / Kg	1	0.025		01/22/01
X0127	XG.2001.80-3	591-78-6	2-Hexanone (MBK)	ND	mg / Kg	1	0.025		01/22/01
X0127	XG.2001.80-3	108-10-1	4-Methyl-2-pentanone (MIBK)	ND	mg / Kg	1	0.025		01/22/01
X0127	XG.2001.80-3	67-64-1	Acetone	ND	mg / Kg	1	0.05		01/22/01
X0127	XG.2001.80-3	107-02-8	Acrolein	ND	mg / Kg	1	0.1		01/22/01
X0127	XG.2001.80-3	107-13-1	Acrylonitrile	ND	mg / Kg	1	0.1		01/22/01
X0127	XG.2001.80-3	71-43-2	Benzene	ND	mg / Kg	1	0.005		01/22/01
X0127	XG.2001.80-3	75-27-4	Bromodichloromethane	ND	mg / Kg	1	0.005		01/22/01
X0127	XG.2001.80-3	75-25-2	Bromoform	ND	mg / Kg	1	0.005		01/22/01
X0127	XG.2001.80-3	74-83-9	Bromomethane	ND	mg / Kg	1	0.025		01/22/01
X0127	XG.2001.80-3	75-15-0	Carbon disulfide	ND	mg / Kg	1	0.025		01/22/01
X0127	XG.2001.80-3	56-23-5	Carbon tetrachloride	ND	mg / Kg	1	0.005		01/22/01
X0127	XG.2001.80-3	108-90-7	Chlorobenzene	ND	mg / Kg	1	0.005		01/22/01
X0127	XG.2001.80-3	124-48-1	Chlorodibromomethane	ND	mg / Kg	1	0.005		01/22/01
X0127	XG.2001.80-3	75-00-3	Chloroethane	ND	mg / Kg	1	0.025		01/22/01
X0127	XG.2001.80-3	67-66-3	Chloroform	ND	mg / Kg	1	0.005		01/22/01
X0127	XG.2001.80-3	74-87-3	Chloromethane	ND	mg / Kg	1	0.025		01/22/01
X0127	XG.2001.80-3	156-59-2	cis-1,2 dichloroethene	ND	mg / Kg	1	0.005		01/22/01
X0127	XG.2001.80-3	10061-01-5	cis-1,3 dichloropropene	ND	mg / Kg	1	0.005		01/22/01
X0127	XG.2001.80-3	74-95-3	Dibromomethane	ND	mg / Kg	1	0.005		01/22/01
	XG.2001.80-3	97-63-2	Ethyl methacrylate	ND	mg / Kg	1	0.025		01/22/01
X0127	XG.2001.80-3	100-41-4	Ethylbenzene	ND	mg / Kg	1	0.005		01/22/01
X0127	XG.2001.80-3		Freon 113	ND	mg / Kg	1	0.025		01/22/01
X0127	XG.2001.80-3	75-71-8	Freon 12	ND	mg / Kg	1	0.05		01/22/01
X0127	XG.2001.80-3	74-88-4	Iodomethane	ND	mg / Kg	1	0.025		01/22/01
X0127	XG.2001.80-3	1634-04-4	Methyl t-butyl ether (MTBE)	ND	mg / Kg	1	0.005		01/22/01
X0127	XG.2001.80-3	75-09-2	Methylene chloride	ND	mg / Kg	1	0.05		01/22/01
X0127	XG.2001.80-3	91-20-3	Naphthalene	ND	mg / Kg	1	0.025		01/22/01
X0127	XG.2001.80-3	95-47-6	o-Xylene	ND	mg / Kg	1	0.005		01/22/01
X0127	XG.2001.80-3	108-38-3/106-42	p/m Xylenes	ND	mg / Kg	1	0.01		01/22/01
X0127	XG.2001.80-3	100-42-5	Styrene	ND	mg / Kg	1	0.005		01/22/01
X0127	XG.2001.80-3	156-60-5	t-1,2 Dichloroethene	ND	mg / Kg	1	0.005		01/22/01
X0127	XG.2001.80-3	10061-02-6	t-1,3 Dichloropropene	ND	mg / Kg	1	0.005		01/22/01
X0127	XG.2001.80-3	127-18-4	Tetrachloroethene	ND	mg / Kg	1	0.005		01/22/01
X0127	XG.2001.80-3	108-88-3	Toluene	ND	mg / Kg	1	0.005		01/22/01
X0127	XG.2001.80-3	79-01-6	Trichloroethene	ND	mg / Kg	1	0.005		01/22/01
X0127	XG.2001.80-3	75-69-4	Trichlorofluoromethane	ND	mg / Kg	1	0.025		01/22/01
X0127	XG.2001.80-3	108-05-4	Vinyl acetate	ND	mg / Kg	1	0.025		01/22/01
X0127	XG.2001.80-3	75-01-4	Vinyl chloride	ND	mg / Kg	1	0.025		01/22/01
X0127-019		**SW846 8260A Purgeable VOCs by GC/MS**							
X0127	XG.2001.124-1	75-34-3	1,1 Dichloroethane	ND	mg / Kg	1	0.005		01/29/01
X0127	XG.2001.124-1	75-34-3	1,1 Dichloroethene	ND	mg / Kg	1	0.005		01/29/01
X0127	XG.2001.124-1	71-55-6	1,1,1 Trichloroethane	ND	mg / Kg	1	0.005		01/29/01
X0127	XG.2001.124-1	630-20-6	1,1,1,2 Tetrachloroethane	ND	mg / Kg	1	0.005		01/29/01
X0127	XG.2001.124-1	79-00-5	1,1,2 Trichloroethane	ND	mg / Kg	1	0.005		01/29/01
X0127	XG.2001.124-1	79-34-5	1,1,2,2 Tetrachloroethane	ND	mg / Kg	1	0.005		01/29/01

Quality Control Summary

Client: **CH2MHILL**

Project: **0101237** **160660.02.FF.SA**

Explanation of codes

D *Not applicable due to sample dilut*

L *Not applicable due to MDL proxim*

X0127	XG.2001.124-1	106-93-4	1,2 Dibromoethane (EDB)	ND	mg / Kg	1	0.005	01/29/01
X0127	XG.2001.124-1	95-50-1	1,2 Dichlorobenzene	ND	mg / Kg	1	0.005	01/29/01
X0127	XG.2001.124-1	107-06-2	1,2 Dichloroethane	ND	mg / Kg	1	0.005	01/29/01
X0127	XG.2001.124-1	78-87-5	1,2 Dichloropropane	ND	mg / Kg	1	0.005	01/29/01
X0127	XG.2001.124-1	96-18-4	1,2,3 Trichloropropane	ND	mg / Kg	1	0.005	01/29/01
X0127	XG.2001.124-1	95-63-6	1,2,4-Trimethylbenzene	ND	mg / Kg	1	0.005	01/29/01
X0127	XG.2001.124-1	541-73-1	1,3 Dichlorobenzene	ND	mg / Kg	1	0.005	01/29/01
X0127	XG.2001.124-1	108-67-8	1,3,5-Trimethylbenzene	ND	mg / Kg	1	0.005	01/29/01
X0127	XG.2001.124-1	764-41-0	1,4 Dichloro-2-butene	ND	mg / Kg	1	0.05	01/29/01
X0127	XG.2001.124-1	106-46-7	1,4 Dichlorobenzene	ND	mg / Kg	1	0.005	01/29/01
X0127	XG.2001.124-1	78-93-3	2-Butanone (MEK)	ND	mg / Kg	1	0.025	01/29/01
X0127	XG.2001.124-1	110-75-8	2-Chloroethylvinylether	ND	mg / Kg	1	0.025	01/29/01
X0127	XG.2001.124-1	591-78-6	2-Hexanone (MBK)	ND	mg / Kg	1	0.025	01/29/01
X0127	XG.2001.124-1	108-10-1	4-Methyl-2-pentanone (MIBK)	ND	mg / Kg	1	0.025	01/29/01
X0127	XG.2001.124-1	67-64-1	Acetone	ND	mg / Kg	1	0.05	01/29/01
X0127	XG.2001.124-1	107-02-8	Acrolein	ND	mg / Kg	1	0.1	01/29/01
X0127	XG.2001.124-1	107-13-1	Acrylonitrile	ND	mg / Kg	1	0.1	01/29/01
X0127	XG.2001.124-1	71-43-2	Benzene	ND	mg / Kg	1	0.005	01/29/01
X0127	XG.2001.124-1	75-27-4	Bromodichloromethane	ND	mg / Kg	1	0.005	01/29/01
X0127	XG.2001.124-1	75-25-2	Bromoform	ND	mg / Kg	1	0.005	01/29/01
X0127	XG.2001.124-1	74-83-9	Bromomethane	ND	mg / Kg	1	0.025	01/29/01
X0127	XG.2001.124-1	75-15-0	Carbon disulfide	ND	mg / Kg	1	0.025	01/29/01
X0127	XG.2001.124-1	56-23-5	Carbon tetrachloride	ND	mg / Kg	1	0.005	01/29/01
X0127	XG.2001.124-1	108-90-7	Chlorobenzene	ND	mg / Kg	1	0.005	01/29
X0127	XG.2001.124-1	124-48-1	Chlorodibromomethane	ND	mg / Kg	1	0.005	01/29
X0127	XG.2001.124-1	75-00-3	Chloroethane	ND	mg / Kg	1	0.025	01/29/01
X0127	XG.2001.124-1	67-66-3	Chloroform	ND	mg / Kg	1	0.005	01/29/01
X0127	XG.2001.124-1	74-87-3	Chloromethane	ND	mg / Kg	1	0.025	01/29/01
X0127	XG.2001.124-1	156-59-2	cis-1,2 dichloroethene	ND	mg / Kg	1	0.005	01/29/01
X0127	XG.2001.124-1	10061-01-5	cis-1,3 dichloropropene	ND	mg / Kg	1	0.005	01/29/01
X0127	XG.2001.124-1	74-95-3	Dibromomethane	ND	mg / Kg	1	0.005	01/29/01
X0127	XG.2001.124-1	97-63-2	Ethyl methacrylate	ND	mg / Kg	1	0.025	01/29/01
X0127	XG.2001.124-1	100-41-4	Ethylbenzene	ND	mg / Kg	1	0.005	01/29/01
X0127	XG.2001.124-1		Freon 113	ND	mg / Kg	1	0.025	01/29/01
X0127	XG.2001.124-1	75-71-8	Freon 12	ND	mg / Kg	1	0.05	01/29/01
X0127	XG.2001.124-1	74-88-4	Iodomethane	ND	mg / Kg	1	0.025	01/29/01
X0127	XG.2001.124-1	1634-04-4	Methyl t-butyl ether (MTBE)	ND	mg / Kg	1	0.005	01/29/01
X0127	XG.2001.124-1	75-09-2	Methylene chloride	ND	mg / Kg	1	0.05	01/29/01
X0127	XG.2001.124-1	91-20-3	Naphthalene	ND	mg / Kg	1	0.025	01/29/01
X0127	XG.2001.124-1	95-47-6	o-Xylene	ND	mg / Kg	1	0.005	01/29/01
X0127	XG.2001.124-1	108-38-3/106-42	p/m Xylenes	ND	mg / Kg	1	0.01	01/29/01
X0127	XG.2001.124-1	100-42-5	Styrene	ND	mg / Kg	1	0.005	01/29/01
X0127	XG.2001.124-1	156-60-5	t-1,2 Dichloroethene	ND	mg / Kg	1	0.005	01/29/01
X0127	XG.2001.124-1	10061-02-6	t-1,3 Dichloropropene	ND	mg / Kg	1	0.005	01/29/01
X0127	XG.2001.124-1	127-18-4	Tetrachloroethene	ND	mg / Kg	1	0.005	01/29/01
X0127	XG.2001.124-1	108-88-3	Toluene	ND	mg / Kg	1	0.005	01/29/01
X0127	XG.2001.124-1	79-01-6	Trichloroethene	ND	mg / Kg	1	0.005	01/29/01
X0127	XG.2001.124-1	75-69-4	Trichlorofluoromethane	ND	mg / Kg	1	0.025	01/29/01
X0127	XG.2001.124-1	108-05-4	Vinyl acetate	ND	mg / Kg	1	0.025	01/29
X0127	XG.2001.124-1	75-01-4	Vinyl chloride	ND	mg / Kg	1	0.025	01/29

Quality Control Summary

Client: CH2MHILL

Project: 0101237 160660.02.FF.SA

Explanation of codes

D	*Not applicable due to sample dilution*
L	*Not applicable due to MDL proximity*

X018-001		**SW846 ME/8015A Diesel Range Organics by GC/FID**							
X018	XG.2001.41-1		Diesel Range Organics	ND	mg / Kg	1	25		01/09/01
X018-010		**SW846 ME/8015A Diesel Range Organics by GC/FID**							
X018	XG.2001.121-1		Diesel Range Organics	ND	mg / Kg	1	25		01/26/01

QC Type **MS: Matrix Spike** QC Matrix **SOLID**

QC Group	Run Sequence	CAS #	Analyte	Result	Units	Dilution Factor	Detection Limit	Code	Run Date
X0114-012		**SW846 5030A/8015A GRO by GC/FID**							
X0114	XG.2001.56-3		Gasoline Range Organics	112	% Recovery	10	NA		01/10/01
X0127-003		**SW846 8260A Purgeable VOCs by GC/MS**							
X0127	XG.2001.69-3	75-34-3	1,1 Dichloroethene	116	% Recovery	1	NA		01/18/01
X0127	XG.2001.69-3	106-46-7	1,4 Dichlorobenzene	104	% Recovery	1	NA		01/18/01
X0127	XG.2001.69-3	71-43-2	Benzene	117	% Recovery	1	NA		01/18/01
X0127	XG.2001.69-3	108-90-7	Chlorobenzene	110	% Recovery	1	NA		01/18/01
X0127	XG.2001.69-3	108-88-3	Toluene	117	% Recovery	1	NA		01/18/01
X0127	XG.2001.69-3	79-01-6	Trichloroethene	109	% Recovery	1	NA		01/18/01
X018-005		**SW846 ME/8015A Diesel Range Organics by GC/FID**							
	XG.2001.41-5		Diesel Range Organics	73	% Recovery	10	NA		01/09/01

QC Type **MSD: Matrix Spike Duplicate Accuracy** QC Matrix **SOLID**

QC Group	Run Sequence	CAS #	Analyte	Result	Units	Dilution Factor	Detection Limit	Code	Run Date
X0114-013		**SW846 5030A/8015A GRO by GC/FID**							
X0114	XG.2001.56-4		Gasoline Range Organics	112	% Recovery	10	NA		01/10/01
X0127-004		**SW846 8260A Purgeable VOCs by GC/MS**							
X0127	XG.2001.69-4	75-34-3	1,1 Dichloroethene	113	% Recovery	1	NA		01/18/01
X0127	XG.2001.69-4	106-46-7	1,4 Dichlorobenzene	103	% Recovery	1	NA		01/18/01
X0127	XG.2001.69-4	71-43-2	Benzene	116	% Recovery	1	NA		01/18/01
X0127	XG.2001.69-4	108-90-7	Chlorobenzene	110	% Recovery	1	NA		01/18/01
X0127	XG.2001.69-4	108-88-3	Toluene	116	% Recovery	1	NA		01/18/01
X0127	XG.2001.69-4	79-01-6	Trichloroethene	108	% Recovery	1	NA		01/18/01
X018-006		**SW846 ME/8015A Diesel Range Organics by GC/FID**							
X018	XG.2001.41-6		Diesel Range Organics	76	% Recovery	10	NA		01/09/01

Quality Control Summary

Client: **CH2MHILL**

Project: **0101237** **160660.02.FF.SA**

Explanation of codes	
D	*Not applicable due to sample dilut*
L	*Not applicable due to MDL proxim*

QC Type **MSD: Matrix Spike Duplicate Precision** QC Matrix **SOLID**

QC Group	Run Sequence	CAS #	Analyte	Result	Units	Dilution Factor	Detection Limit	Code	Run Date
X0114-013		**SW846 5030A/8015A GRO by GC/FID**							
X0114	XG.2001.56-4		Gasoline Range Organics	< 1	RPD	10	NA		01/10/01
X0127-004		**SW846 8260A Purgeable VOCs by GC/MS**							
X0127	XG.2001.69-4	75-34-3	1,1 Dichloroethene	2	RPD	1	NA		01/18/01
X0127	XG.2001.69-4	106-46-7	1,4 Dichlorobenzene	< 1	RPD	1	NA		01/18/01
X0127	XG.2001.69-4	71-43-2	Benzene	1	RPD	1	NA		01/18/01
X0127	XG.2001.69-4	108-90-7	Chlorobenzene	< 1	RPD	1	NA		01/18/01
X0127	XG.2001.69-4	108-88-3	Toluene	< 1	RPD	1	NA		01/18/01
X0127	XG.2001.69-4	79-01-6	Trichloroethene	< 1	RPD	1	NA		01/18/01
X018-006		**SW846 ME/8015A Diesel Range Organics by GC/FID**							
X018	XG.2001.41-6		Diesel Range Organics	5	RPD	10	NA		01/09/01

Surrogate Summary: QC

Client: CH2MHILL
Project: 0101237 160660.02.FF.SA

QC Type: **LCS** QC Matrix: **SOLID**

QC Group	Run Sequence	CAS #	Analyte	Result	Units	Dilution Factor	Detection Limit	Code	Run Date
X0114-002		GRO							
X0114	XG.2001.43-2	NA	4-Bromofluorobenzene-FID	106	% Recovery	1	NA		01/09/01
X0114	XG.2001.43-2	NA	4-Bromofluorobenzene-PID	ND	% Recovery	1	NA		01/09/01
X0114	XG.2001.43-2	NA	aaa-Trifluorotoluene-FID	105	% Recovery	1	NA		01/09/01
X0114	XG.2001.43-2	NA	aaa-Trifluorotoluene-PID	ND	% Recovery	1	NA		01/09/01
X0127-005		8260							
X0127	XG.2001.69-5	NA	1,2 Dichloroethane-D4 (SS)	87	% Recovery	1	NA		01/18/01
X0127	XG.2001.69-5	NA	4-Bromofluorobenzene (SS)	96	% Recovery	1	NA		01/18/01
X0127	XG.2001.69-5	NA	Dibromofluoromethane (SS)	101	% Recovery	1	NA		01/18/01
X0127	XG.2001.69-5	NA	Toluene-D8 (SS)	102	% Recovery	1	NA		01/18/01
X018-002		DRO							
X018	XG.2001.41-2	NA	O-terphenyl	106	% Recovery	1	NA		01/09/01

QC Type: **LCSD** QC Matrix: **SOLID**

QC Group	Run Sequence	CAS #	Analyte	Result	Units	Dilution Factor	Detection Limit	Code	Run Date
X0114-003		GRO							
X0114	XG.2001.43-3	NA	4-Bromofluorobenzene-FID	106	% Recovery	1	NA		01/09/01
X0114	XG.2001.43-3	NA	4-Bromofluorobenzene-PID	ND	% Recovery	1	NA		01/09/01
X0114	XG.2001.43-3	NA	aaa-Trifluorotoluene-FID	105	% Recovery	1	NA		01/09/01
X0114	XG.2001.43-3	NA	aaa-Trifluorotoluene-PID	ND	% Recovery	1	NA		01/09/01
X0127-006		8260							
X0127	XG.2001.69-6	NA	1,2 Dichloroethane-D4 (SS)	91	% Recovery	1	NA		01/18/01
X0127	XG.2001.69-6	NA	4-Bromofluorobenzene (SS)	98	% Recovery	1	NA		01/18/01
X0127	XG.2001.69-6	NA	Dibromofluoromethane (SS)	101	% Recovery	1	NA		01/18/01
X0127	XG.2001.69-6	NA	Toluene-D8 (SS)	102	% Recovery	1	NA		01/18/01
X018-003		DRO							
X018	XG.2001.41-3	NA	O-terphenyl	113	% Recovery	1	NA		01/09/01

QC Type: **MB** QC Matrix: **SOLID**

QC Group	Run Sequence	CAS #	Analyte	Result	Units	Dilution Factor	Detection Limit	Code	Run Date
X0114-001		GRO							
X0114	XG.2001.43-1	NA	4-Bromofluorobenzene-FID	93	% Recovery	1	NA		01/09/01
[illegible]4	XG.2001.43-1	NA	4-Bromofluorobenzene-PID	ND	% Recovery	1	NA		01/09/01
[illegible]14	XG.2001.43-1	NA	aaa-Trifluorotoluene-FID	104	% Recovery	1	NA		01/09/01

Surrogate Summary: QC

Client: **CH2MHILL**

Project: **0101237** **160660.02.FF.SA**

X0114	XG.2001.43-1	NA	aaa-Trifluorotoluene-PID	ND	% Recovery	1	NA		01/09/01
X0114-010		GRO							
X0114	XG.2001.56-1	NA	4-Bromofluorobenzene-FID	92	% Recovery	1	NA		01/10/01
X0114	XG.2001.56-1	NA	4-Bromofluorobenzene-PID	ND	% Recovery	1	NA		01/10/01
X0114	XG.2001.56-1	NA	aaa-Trifluorotoluene-FID	102	% Recovery	1	NA		01/10/01
X0114	XG.2001.56-1	NA	aaa-Trifluorotoluene-PID	ND	% Recovery	1	NA		01/10/01
X0114-014		GRO							
X0114	XG.2001.120-1	NA	4-Bromofluorobenzene-FID	93	% Recovery	1	NA		01/26/01
X0114	XG.2001.120-1	NA	4-Bromofluorobenzene-PID	ND	% Recovery	1	NA		01/26/01
X0114	XG.2001.120-1	NA	aaa-Trifluorotoluene-FID	102	% Recovery	1	NA		01/26/01
X0114	XG.2001.120-1	NA	aaa-Trifluorotoluene-PID	ND	% Recovery	1	NA		01/26/01
X0127-001		8260							
X0127	XG.2001.69-1	NA	1,2 Dichloroethane-D4 (SS)	85	% Recovery	1	NA		01/18/01
X0127	XG.2001.69-1	NA	4-Bromofluorobenzene (SS)	96	% Recovery	1	NA		01/18/01
X0127	XG.2001.69-1	NA	Dibromofluoromethane (SS)	98	% Recovery	1	NA		01/18/01
X0127	XG.2001.69-1	NA	Toluene-D8 (SS)	100	% Recovery	1	NA		01/18/01
X0127-011		8260							
X0127	XG.2001.80-1	NA	1,2 Dichloroethane-D4 (SS)	96	% Recovery	1	NA		01/22/01
X0127	XG.2001.80-1	NA	4-Bromofluorobenzene (SS)	100	% Recovery	1	NA		01/22/01
X0127	XG.2001.80-1	NA	Dibromofluoromethane (SS)	103	% Recovery	1	NA		01/22/01
X0127	XG.2001.80-1	NA	Toluene-D8 (SS)	101	% Recovery	1	NA		01/22/01
X0127-014		8260							
X0127	XG.2001.80-3	NA	1,2 Dichloroethane-D4 (SS)	95	% Recovery	1	NA		01/22/01
X0127	XG.2001.80-3	NA	4-Bromofluorobenzene (SS)	97	% Recovery	1	NA		01/22/01
X0127	XG.2001.80-3	NA	Dibromofluoromethane (SS)	102	% Recovery	1	NA		01/22/01
X0127	XG.2001.80-3	NA	Toluene-D8 (SS)	102	% Recovery	1	NA		01/22/01
X0127-019		8260							
X0127	XG.2001.124-1	NA	1,2 Dichloroethane-D4 (SS)	94	% Recovery	1	NA		01/29/01
X0127	XG.2001.124-1	NA	4-Bromofluorobenzene (SS)	97	% Recovery	1	NA		01/29/01
X0127	XG.2001.124-1	NA	Dibromofluoromethane (SS)	102	% Recovery	1	NA		01/29/01
X0127	XG.2001.124-1	NA	Toluene-D8 (SS)	100	% Recovery	1	NA		01/29/01
X018-001		DRO							
X018	XG.2001.41-1	NA	O-terphenyl	96	% Recovery	1	NA		01/09/01
X018-010		DRO							
X018	XG.2001.121-1	NA	O-terphenyl	99	% Recovery	1	NA		01/26/01

QC Type **MS** QC Matrix **SOLID**

QC Group	Run Sequence	CAS #	Analyte	Result	Units	Dilution Factor	Detection Limit	Code	Run Date
X0114-012		GRO							
X0114	XG.2001.56-3	NA	4-Bromofluorobenzene-FID	105	% Recovery	10	NA		01/10/01
X0114	XG.2001.56-3	NA	4-Bromofluorobenzene-PID	ND	% Recovery	10	NA		01/10/01
X0114	XG.2001.56-3	NA	aaa-Trifluorotoluene-FID	106	% Recovery	10	NA		01/10/01
X0114	XG.2001.56-3	NA	aaa-Trifluorotoluene-PID	ND	% Recovery	10	NA		01/10/01

Surrogate Summary: QC

Client: **CH2MHILL**

Project: **0101237** **160660.02.FF.SA**

X0127-003		8260							
X0127	XG.2001.69-3	NA	1,2 Dichloroethane-D4 (SS)	93	% Recovery	1	NA		01/18/01
X0127	XG.2001.69-3	NA	4-Bromofluorobenzene (SS)	92	% Recovery	1	NA		01/18/01
X0127	XG.2001.69-3	NA	Dibromofluoromethane (SS)	103	% Recovery	1	NA		01/18/01
X0127	XG.2001.69-3	NA	Toluene-D8 (SS)	96	% Recovery	1	NA		01/18/01
X018-005		DRO							
X018	XG.2001.41-5	NA	O-terphenyl	138	% Recovery	10	NA		01/09/01

QC Type **MSD** QC Matrix **SOLID**

QC Group	Run Sequence	CAS #	Analyte	Result	Units	Dilution Factor	Detection Limit	Code	Run Date
X0114-013		GRO							
X0114	XG.2001.56-4	NA	4-Bromofluorobenzene-FID	106	% Recovery	10	NA		01/10/01
X0114	XG.2001.56-4	NA	4-Bromofluorobenzene-PID	ND	% Recovery	10	NA		01/10/01
X0114	XG.2001.56-4	NA	aaa-Trifluorotoluene-FID	107	% Recovery	10	NA		01/10/01
X0114	XG.2001.56-4	NA	aaa-Trifluorotoluene-PID	ND	% Recovery	10	NA		01/10/01
X0127-004		8260							
X0127	XG.2001.69-4	NA	1,2 Dichloroethane-D4 (SS)	94	% Recovery	1	NA		01/18/01
X0127	XG.2001.69-4	NA	4-Bromofluorobenzene (SS)	93	% Recovery	1	NA		01/18/01
	XG.2001.69-4	NA	Dibromofluoromethane (SS)	104	% Recovery	1	NA		01/18/01
X0127	XG.2001.69-4	NA	Toluene-D8 (SS)	96	% Recovery	1	NA		01/18/01
X018-006		DRO							
X018	XG.2001.41-6	NA	O-terphenyl	138	% Recovery	10	NA		01/09/01

Assaigai Analytical Laboratories, Inc.

Surrogate Summary: Fraction

Client: **CH2MHILL**

Project: **0101237** **160660.02.FF.SA**

Client Sample ID **SB-30-40'** Sample Matrix **SOIL**

QC Group	Run Sequence	CAS #	Analyte	Result	Units	Dilution Factor	Detection Limit	Code	Run Date
0101237-01A		GRO							X0114-015
X0114	XG.2001.120-2	NA	4-Bromofluorobenzene-FID	92	% Recovery	1	NA		01/26/0
X0114	XG.2001.120-2	NA	4-Bromofluorobenzene-PID	ND	% Recovery	1	NA		01/26/0
X0114	XG.2001.120-2	NA	aaa-Trifluorotoluene-FID	102	% Recovery	1	NA		01/26/0
X0114	XG.2001.120-2	NA	aaa-Trifluorotoluene-PID	ND	% Recovery	1	NA		01/26/0
0101237-01B		DRO							X018-013
X018	XG.2001.121-2	NA	O-terphenyl	92	% Recovery	1	NA		01/26/0

Client Sample ID **SB-30-110'** Sample Matrix **SOIL**

QC Group	Run Sequence	CAS #	Analyte	Result	Units	Dilution Factor	Detection Limit	Code	Run Date
0101237-02A		GRO							X0114-016
X0114	XG.2001.120-3	NA	4-Bromofluorobenzene-FID	101	% Recovery	1	NA		01/26/0
X0114	XG.2001.120-3	NA	4-Bromofluorobenzene-PID	ND	% Recovery	1	NA		01/26/
X0114	XG.2001.120-3	NA	aaa-Trifluorotoluene-FID	106	% Recovery	1	NA		01/26
X0114	XG.2001.120-3	NA	aaa-Trifluorotoluene-PID	ND	% Recovery	1	NA		01/26/0
0101237-02B		DRO							X018-014
X018	XG.2001.121-3	NA	O-terphenyl	100	% Recovery	1	NA		01/26/0
0101237-02C		8260							X0127-020
X0127	XG.2001.124-2	NA	1,2 Dichloroethane-D4 (SS)	97	% Recovery	1	NA		01/29/01
X0127	XG.2001.124-2	NA	4-Bromofluorobenzene (SS)	98	% Recovery	1	NA		01/29/01
X0127	XG.2001.124-2	NA	Dibromofluoromethane (SS)	102	% Recovery	1	NA		01/29/01
X0127	XG.2001.124-2	NA	Toluene-D8 (SS)	101	% Recovery	1	NA		01/29/01

Client Sample ID **SB-30-160** Sample Matrix **SOIL**

QC Group	Run Sequence	CAS #	Analyte	Result	Units	Dilution Factor	Detection Limit	Code	Run Date
0101237-03A		GRO							X0114-017
X0114	XG.2001.120-4	NA	4-Bromofluorobenzene-FID	96	% Recovery	1	NA		01/26/01
X0114	XG.2001.120-4	NA	4-Bromofluorobenzene-PID	ND	% Recovery	1	NA		01/26/01
X0114	XG.2001.120-4	NA	aaa-Trifluorotoluene-FID	105	% Recovery	1	NA		01/26/01
X0114	XG.2001.120-4	NA	aaa-Trifluorotoluene-PID	ND	% Recovery	1	NA		01/26/01
0101237-03B		DRO							X018-015
X018	XG.2001.121-4	NA	O-terphenyl	94	% Recovery	1	NA		01/26/01

ASSOCIGAL ANALYTICAL LABORATORIES, INC.

Chain of Custody Record

7300 JEFFERSON N.E.
ALBUQUERQUE, NEW MEXICO 8710
(505) 345-8964

3332 WEDGEWOOD
EL PASO, TEXAS 79925
(915) 593-6000

127 EASTGATE DRIVE, 212-C
LOS ALAMOS, NEW MEXICO 87544
(505) 662-2558

Lab job No.: 0101237 Date 1-26-1

Page 1 of 1

Client: [illegible]

Address: 6001 INDIAN SCHOOL RD NE #350

City / State / Zip: ABQ NM 87110

Project Name / Number: KHEB/TO-10/Bulk Fuel

Contract / Purchase Order / Quote:

~~Project Manager~~ / Contact: Bill LeFever

Telephone No.: 884 5600 / 835-7142

Fax No.: 837 7502

Samplers: (signature)

Analysis Required

AAL Fraction Number	Field Sample Number / Location	Date	Time	Sample Type	Type / Size of Container	Preservation Temp.	Preservation Chemical	No. of Containers	GRO/DRO 8015B	VOC	BTEX 8020								Remarks
[illegible]	SB-30-40'	1-24-1	1405	Soil	4oz	10c	None	2	X										
	~~[illegible]~~	~~1-25-1~~	~~1600~~	~~Soil~~	~~4oz~~	~~10c~~	~~None~~	~~3~~	~~X~~	~~X~~									~~[illegible]~~
[illegible]	[illegible] 110'	1-25-1	1620	Soil	4oz	10c	None	3	X	X									[illegible] PID
	~~[illegible]~~	~~1-26-1~~	~~0972~~	~~Soil~~	~~4oz~~	~~10c~~	~~None~~	~~3~~	~~X~~		~~X~~								~~[illegible]~~
[illegible]	SB-[illegible] 160	1-26-1	914	Soil	4oz	10c	None	2	X										

SAMPLES INW [illegible]

Relinquished by:	Date	Received by:	Relinquished by:	Date	Received by:
Signature: [illegible]	1-26	Signature: [illegible]	Signature:		Signature:
Printed: [illegible]	Time	Printed: [illegible]	Printed:	Time	Printed:
Company: [illegible]	[illegible]	Company: [illegible]	Company:		Company:
Reason: [illegible]		Reason: [illegible]	Reason:		Reason:

Method of Shipment:

Shipment No.:

Special Instructions:

Comments: 24 hr TAT

After analysis, samples are to be:

- ❑ Disposed of (additional fee)
- ❑ Stored (30 days max)
- ❑ Stored over 30 days (additional fee)
- ❑ Returned to customer

COURIER

ASSAIGAI
ANALYTICAL
LABORATORIES, INC.
7300 Jefferson, NE • Albuquerque, New Mexico 87109 • (505) 345-8964 • FAX (505) 345-7259
3332 Wedgewood Dr., Suite N • El Paso, Texas 79925 • (915) 593-6000 • FAX (915) 593-7820
127 Eastgate Drive, 212-C • Los Alamos, New Mexico 87544 • (505) 662-255

RECEIVED

Explanation of codes

B	*analyte detected in Method Blank*
E	*result is estimated*
H	*analyzed out of hold time*
N	*tentatively identified compound*
S	*subcontracted*
1-9	*see footnote*

CH2MHILL
attn: **AMY HALLORAN**
6001 INDIAN SCHOOL RD NE STE 350
ALBUQUERQUE, NM 87110-4140

Assaigai Analytical Laboratories, Inc.

Certificate of Analysis

Client: **CH2MHILL**
Project: **0101252** **160660.02.FF.SA**

for *William P. Biava: President of Assaigai Analytical Laboratories, Inc.*

Client Sample ID: ***ST-106 SB30 220'*** Sample Matrix: ***SOIL*** Sample Collected: ***01/26/01 16:00:00***

QC Group	Run Sequence	CAS #	Analyte	Result	Units	Dilution Factor	Detection Limit	Code	Run Date
0101252-01A		**SW846 5030A/8015A GRO by GC/FID**							
X0114	XG.2001.129-2		Gasoline Range Organics	ND	mg / Kg	1	0.25		01/30/01
0101252-01B		**SW846 ME/8015A Diesel Range Organics by GC/FID**							
X018	XG.2001.130-2		Diesel Range Organics	ND	mg / Kg	1	25		01/30/01
0101252-01C		**SW846 8260A Purgeable VOCs by GC/MS**							
X0127	XG.2001.132-2	75-34-3	1,1 Dichloroethane	ND	mg / Kg	1	0.005		01/30/01
X0127	XG.2001.132-2	75-34-3	1,1 Dichloroethene	ND	mg / Kg	1	0.005		01/30/01
X0127	XG.2001.132-2	71-55-6	1,1,1 Trichloroethane	ND	mg / Kg	1	0.005		01/30/01
X0127	XG.2001.132-2	630-20-6	1,1,1,2 Tetrachloroethane	ND	mg / Kg	1	0.005		01/30/01
X0127	XG.2001.132-2	79-00-5	1,1,2 Trichloroethane	ND	mg / Kg	1	0.005		01/30/01
X0127	XG.2001.132-2	79-34-5	1,1,2,2 Tetrachloroethane	ND	mg / Kg	1	0.005		01/30/01
X0127	XG.2001.132-2	106-93-4	1,2 Dibromoethane (EDB)	ND	mg / Kg	1	0.005		01/30/01
X0127	XG.2001.132-2	95-50-1	1,2 Dichlorobenzene	ND	mg / Kg	1	0.005		01/30/01
X0127	XG.2001.132-2	107-06-2	1,2 Dichloroethane	ND	mg / Kg	1	0.005		01/30/01
X0127	XG.2001.132-2	78-87-5	1,2 Dichloropropane	ND	mg / Kg	1	0.005		01/30/01
X0127	XG.2001.132-2	96-18-4	1,2,3 Trichloropropane	ND	mg / Kg	1	0.005		01/30/01
X0127	XG.2001.132-2	95-63-6	1,2,4-Trimethylbenzene	ND	mg / Kg	1	0.005		01/30/01
X0127	XG.2001.132-2	541-73-1	1,3 Dichlorobenzene	ND	mg / Kg	1	0.005		01/30/01
X0127	XG.2001.132-2	108-67-8	1,3,5-Trimethylbenzene	ND	mg / Kg	1	0.005		01/30/01
X0127	XG.2001.132-2	764-41-0	1,4 Dichloro-2-butene	ND	mg / Kg	1	0.05		01/30/01
X0127	XG.2001.132-2	106-46-7	1,4 Dichlorobenzene	ND	mg / Kg	1	0.005		01/30/01
[illegible]7	XG.2001.132-2	78-93-3	2-Butanone (MEK)	ND	mg / Kg	1	0.025		01/30/01

Member
American Council of
Independent Laboratories, Inc.

REPRODUCTION OF THIS REPORT IN LESS THAN FULL REQUIRES THE WRITTEN CONSENT OF AAL.
THIS REPORT MAY NOT BE USED IN ANY MANNER BY THE CLIENT OR ANY OTHER THIRD PARTY TO CLAIM
PRODUCT ENDORSEMENT BY ANY ACCREDITATION PROGRAM

Certificate of Analysis

Client: **CH2MHILL**

Project: **0101252** **160660.02.FF.SA**

X0127	XG.2001.132-2	110-75-8	2-Chloroethylvinylether	ND	mg / Kg	1	0.025		01/30/01
X0127	XG.2001.132-2	591-78-6	2-Hexanone (MBK)	ND	mg / Kg	1	0.025		01/30/01
X0127	XG.2001.132-2	108-10-1	4-Methyl-2-pentanone (MIBK)	ND	mg / Kg	1	0.025		01/30/01
X0127	XG.2001.132-2	67-64-1	Acetone	ND	mg / Kg	1	0.05		01/30/01
X0127	XG.2001.132-2	107-02-8	Acrolein	ND	mg / Kg	1	0.1		01/30/01
X0127	XG.2001.132-2	107-13-1	Acrylonitrile	ND	mg / Kg	1	0.1		01/30/01
X0127	XG.2001.132-2	71-43-2	Benzene	ND	mg / Kg	1	0.005		01/30/01
X0127	XG.2001.132-2	75-27-4	Bromodichloromethane	ND	mg / Kg	1	0.005		01/30/01
X0127	XG.2001.132-2	75-25-2	Bromoform	ND	mg / Kg	1	0.005		01/30/01
X0127	XG.2001.132-2	74-83-9	Bromomethane	ND	mg / Kg	1	0.025		01/30/01
X0127	XG.2001.132-2	75-15-0	Carbon disulfide	ND	mg / Kg	1	0.025		01/30/01
X0127	XG.2001.132-2	56-23-5	Carbon tetrachloride	ND	mg / Kg	1	0.005		01/30/01
X0127	XG.2001.132-2	108-90-7	Chlorobenzene	ND	mg / Kg	1	0.005		01/30/01
X0127	XG.2001.132-2	124-48-1	Chlorodibromomethane	ND	mg / Kg	1	0.005		01/30/01
X0127	XG.2001.132-2	75-00-3	Chloroethane	ND	mg / Kg	1	0.025		01/30/01
X0127	XG.2001.132-2	67-66-3	Chloroform	ND	mg / Kg	1	0.005		01/30/01
X0127	XG.2001.132-2	74-87-3	Chloromethane	ND	mg / Kg	1	0.025		01/30/01
X0127	XG.2001.132-2	156-59-2	cis-1,2 dichloroethene	ND	mg / Kg	1	0.005		01/30/01
X0127	XG.2001.132-2	10061-01-5	cis-1,3 dichloropropene	ND	mg / Kg	1	0.005		01/30/01
X0127	XG.2001.132-2	74-95-3	Dibromomethane	ND	mg / Kg	1	0.005		01/30/01
X0127	XG.2001.132-2	97-63-2	Ethyl methacrylate	ND	mg / Kg	1	0.025		01/30/01
X0127	XG.2001.132-2	100-41-4	Ethylbenzene	ND	mg / Kg	1	0.005		01/30/01
X0127	XG.2001.157-3		Freon 113	ND	mg / Kg	1	0.025	1	02/01/
X0127	XG.2001.132-2	75-71-8	Freon 12	ND	mg / Kg	1	0.05		01/30
X0127	XG.2001.132-2	74-88-4	Iodomethane	ND	mg / Kg	1	0.025		01/30/0
X0127	XG.2001.132-2	1634-04-4	Methyl t-butyl ether (MTBE)	ND	mg / Kg	1	0.005		01/30/0
X0127	XG.2001.132-2	75-09-2	Methylene chloride	ND	mg / Kg	1	0.05		01/30/0
X0127	XG.2001.132-2	91-20-3	Naphthalene	ND	mg / Kg	1	0.025		01/30/0
X0127	XG.2001.132-2	95-47-6	o-Xylene	ND	mg / Kg	1	0.005		01/30/0
X0127	XG.2001.132-2	108-38-3/106-42	p/m Xylenes	ND	mg / Kg	1	0.01		01/30/0
X0127	XG.2001.132-2	100-42-5	Styrene	ND	mg / Kg	1	0.005		01/30/0
X0127	XG.2001.132-2	156-60-5	t-1,2 Dichloroethene	ND	mg / Kg	1	0.005		01/30/0
X0127	XG.2001.132-2	10061-02-6	t-1,3 Dichloropropene	ND	mg / Kg	1	0.005		01/30/0
X0127	XG.2001.132-2	127-18-4	Tetrachloroethene	ND	mg / Kg	1	0.005		01/30/0
X0127	XG.2001.132-2	108-88-3	Toluene	ND	mg / Kg	1	0.005		01/30/0
X0127	XG.2001.132-2	79-01-6	Trichloroethene	ND	mg / Kg	1	0.005		01/30/0
X0127	XG.2001.132-2	75-69-4	Trichlorofluoromethane	ND	mg / Kg	1	0.025		01/30/0
X0127	XG.2001.132-2	108-05-4	Vinyl acetate	ND	mg / Kg	1	0.025		01/30/0
X0127	XG.2001.132-2	75-01-4	Vinyl chloride	ND	mg / Kg	1	0.025		01/30/0
0101252-01D		**SW846 3550A/8270B SVOCs by GC/MS**							
X0128	XG.2001.274-2	120-82-1	1,2,4-Trichlorobenzene	ND	mg / Kg	1	0.03		01/30/0
X0128	XG.2001.274-2	95-50-1	1,2-Dichlorobenzene	ND	mg / Kg	1	0.03		01/30/0
X0128	XG.2001.274-2	541-73-1	1,3-Dichlorobenzene	ND	mg / Kg	1	0.03		01/30/0
X0128	XG.2001.274-2	106-46-7	1,4-Dichlorobenzene	ND	mg / Kg	1	0.03		01/30/0
X0128	XG.2001.274-2	90-12-0	1-Methylnaphthalene	ND	mg / Kg	1	0.03		01/30/0
X0128	XG.2001.274-2	58-90-2	2,3,4,6-Tetrachlorophenol	ND	mg / Kg	1	1.5		01/30/0
X0128	XG.2001.274-2	95-95-4	2,4,5-Trichlorophenol	ND	mg / Kg	1	0.3		01/30/0

Certificate of Analysis

: CH2MHILL

Project: **0101252** **160660.02.FF.SA**

X0128	XG.2001.274-2	88-06-2	2,4,6-Trichlorophenol	ND	mg / Kg	1	0.3	01/30/01
X0128	XG.2001.274-2	120-83-2	2,4-Dichlorophenol	ND	mg / Kg	1	0.3	01/30/01
X0128	XG.2001.274-2	105-67-9	2,4-Dimethylphenol	ND	mg / Kg	1	0.03	01/30/01
X0128	XG.2001.274-2	51-28-5	2,4-Dinitrophenol	ND	mg / Kg	1	0.67	01/30/01
X0128	XG.2001.274-2	121-14-2	2,4-Dinitrotoluene	ND	mg / Kg	1	0.3	01/30/01
X0128	XG.2001.274-2	606-20-2	2,6-Dinitrotoluene	ND	mg / Kg	1	0.3	01/30/01
X0128	XG.2001.274-2	91-58-7	2-Chloronaphthalene	ND	mg / Kg	1	0.03	01/30/01
X0128	XG.2001.274-2	95-57-8	2-Chlorophenol	ND	mg / Kg	1	0.03	01/30/01
X0128	XG.2001.274-2	91-57-6	2-Methylnaphthalene	ND	mg / Kg	1	0.03	01/30/01
X0128	XG.2001.274-2	95-48-7	2-Methylphenol	ND	mg / Kg	1	0.03	01/30/01
X0128	XG.2001.274-2	88-74-4	2-Nitroaniline	ND	mg / Kg	1	0.3	01/30/01
X0128	XG.2001.274-2	88-75-5	2-Nitrophenol	ND	mg / Kg	1	0.3	01/30/01
X0128	XG.2001.274-2		3+4 Methylphenol	ND	mg / Kg	1	0.03	01/30/01
X0128	XG.2001.274-2	91-94-1	3,3-Dichlorobenzidine	ND	mg / Kg	1	0.3	01/30/01
X0128	XG.2001.274-2	99-09-2	3-Nitroaniline	ND	mg / Kg	1	0.3	01/30/01
X0128	XG.2001.274-2	534-52-1	4,6-Dinitro-2-methylphenol	ND	mg / Kg	1	0.3	01/30/01
X0128	XG.2001.274-2	101-55-3	4-Bromophenyl-phenylether	ND	mg / Kg	1	0.03	01/30/01
X0128	XG.2001.274-2	59-50-7	4-Chloro-3-methylphenol	ND	mg / Kg	1	0.3	01/30/01
X0128	XG.2001.274-2	106-47-8	4-Chloroaniline	ND	mg / Kg	1	0.3	01/30/01
X0128	XG.2001.274-2	7005-72-3	4-Chlorophenyl-phenylether	ND	mg / Kg	1	0.03	01/30/01
X0128	XG.2001.274-2	100-01-6	4-Nitroaniline	ND	mg / Kg	1	0.3	01/30/01
X0128	XG.2001.274-2	100-02-7	4-Nitrophenol	ND	mg / Kg	1	0.6	01/30/01
	XG.2001.274-2	83-32-9	Acenaphthene	ND	mg / Kg	1	0.03	01/30/01
	XG.2001.274-2	208-96-8	Acenaphthylene	ND	mg / Kg	1	0.03	01/30/01
X0128	XG.2001.274-2	62-53-3	Aniline	ND	mg / Kg	1	0.3	01/30/01
X0128	XG.2001.274-2	120-12-7	Anthracene	ND	mg / Kg	1	0.03	01/30/01
X0128	XG.2001.274-2		Azobenzene&1,2-Diphenylhydrazine	ND	mg / Kg	1	0.03	01/30/01
X0128	XG.2001.274-2	56-55-3	Benzo (a) anthracene	ND	mg / Kg	1	0.03	01/30/01
X0128	XG.2001.274-2	50-32-8	Benzo(a)pyrene	ND	mg / Kg	1	0.03	01/30/01
X0128	XG.2001.274-2		Benzo(b & k)fluoranthene	ND	mg / Kg	1	0.03	01/30/01
X0128	XG.2001.274-2	191-24-2	Benzo(g,h,i)perylene	ND	mg / Kg	1	0.3	01/30/01
X0128	XG.2001.274-2	64-85-0	Benzoic acid	ND	mg / Kg	1	3	01/30/01
X0128	XG.2001.274-2	100-51-6	Benzyl alcohol	ND	mg / Kg	1	1.5	01/30/01
X0128	XG.2001.274-2	111-44-4	bis (2-Chloroethyl) ether	ND	mg / Kg	1	0.03	01/30/01
X0128	XG.2001.274-2	111-91-1	bis(2-Chloroethoxy)methane	ND	mg / Kg	1	0.03	01/30/01
X0128	XG.2001.274-2	108-60-1	bis(2-Chloroisopropyl)ether	ND	mg / Kg	1	0.03	01/30/01
X0128	XG.2001.274-2	117-81-7	bis(2-Ethylhexyl)phthalate	ND	mg / Kg	1	0.3	01/30/01
X0128	XG.2001.274-2	85-68-7	Butylbenzylphthalate	ND	mg / Kg	1	0.03	01/30/01
X0128	XG.2001.274-2	218-01-9	Chrysene	ND	mg / Kg	1	0.03	01/30/01
X0128	XG.2001.274-2	84-74-2	di-n-Butylphthalate	ND	mg / Kg	1	0.3	01/30/01
X0128	XG.2001.274-2	117-84-0	di-n-Octylpthalate	ND	mg / Kg	1	0.3	01/30/01
X0128	XG.2001.274-2	53-70-3	Dibenz(a,h)anthracene	ND	mg / Kg	1	0.3	01/30/01
X0128	XG.2001.274-2	132-64-9	Dibenzofuran	ND	mg / Kg	1	0.03	01/30/01
X0128	XG.2001.274-2	84-66-2	Diethylphthalate	ND	mg / Kg	1	0.03	01/30/01
X0128	XG.2001.274-2	131-11-3	Dimethylphthalate	ND	mg / Kg	1	0.03	01/30/01
X0128	XG.2001.274-2	206-44-0	Fluoranthene	ND	mg / Kg	1	0.03	01/30/01
X0128	XG.2001.274-2	86737	Fluorene	ND	mg / Kg	1	0.03	01/30/01
	XG.2001.274-2	118-74-1	Hexachlorobenzene	ND	mg / Kg	1	0.03	01/30/01

Certificate of Analysis

Client: CH2MHILL

Project: 0101252 160660.02.FF.SA

X0128	XG.2001.274-2	87-68-3	Hexachlorobutadiene	ND	mg / Kg	1	0.03		01/30/01
X0128	XG.2001.274-2	77-47-4	Hexachlorocyclopentadiene	ND	mg / Kg	1	1.5		01/30/01
X0128	XG.2001.274-2	67-72-1	Hexachloroethane	ND	mg / Kg	1	0.03		01/30/01
X0128	XG.2001.274-2	193-39-5	Indeno(1,2,3-cd)pyrene	ND	mg / Kg	1	0.3		01/30/01
X0128	XG.2001.274-2	78-59-1	Isophorone	ND	mg / Kg	1	0.03		01/30/01
X0128	XG.2001.274-2	621-64-7	n-Nitroso-di-n-propylamine	ND	mg / Kg	1	0.03		01/30/01
X0128	XG.2001.274-2	62-75-9	n-Nitroso-dimethyl-amine	ND	mg / Kg	1	0.3		01/30/01
X0128	XG.2001.274-2	86-30-6	n-Nitrosodiphenylamine	ND	mg / Kg	1	0.03		01/30/01
X0128	XG.2001.274-2	91-20-3	Naphthalene	ND	mg / Kg	1	0.03		01/30/01
X0128	XG.2001.274-2	98-95-3	Nitrobenzene	ND	mg / Kg	1	0.03		01/30/01
X0128	XG.2001.274-2	87-86-5	Pentachlorophenol	ND	mg / Kg	1	0.3		01/30/01
X0128	XG.2001.274-2	85-01-8	Phenanthrene	ND	mg / Kg	1	0.03		01/30/01
X0128	XG.2001.274-2	108-95-2	Phenol	ND	mg / Kg	1	0.3		01/30/01
X0128	XG.2001.274-2	129-00-0	Pyrene	ND	mg / Kg	1	0.03		01/30/01
X0128	XG.2001.274-2	110-86-1	Pyridine	ND	mg / Kg	1	0.3		01/30/01

Client Sample ID ***ST-106 SB30 250'*** Sample Matrix ***SOIL*** Sample Collected *01/29/01 10:25:00*

QC Group	Run Sequence	CAS #	Analyte	Result	Units	Dilution Factor	Detection Limit	Code	Run Date
0101252-02A		**SW846 5030A/8015A GRO by GC/FID**							
X0114	XG.2001.129-3		Gasoline Range Organics	0.84	mg / Kg	1	0.25		01/30/01
0101252-02B		**SW846 ME/8015A Diesel Range Organics by GC/FID**							
X018	XG.2001.130-3		Diesel Range Organics	ND	mg / Kg	1	25		01/30/01
0101252-02C		**SW846 5030A/8021B Purgeable VOCs by GC/PID**							
X0133	XG.2001.150-11	71-43-2	Benzene	ND	mg / Kg	10	0.005		02/01/01
X0133	XG.2001.150-11	100-41-4	Ethylbenzene	ND	mg / Kg	10	0.005		02/01/01
X0133	XG.2001.150-11	95-47-6	o-Xylene	ND	mg / Kg	10	0.005		02/01/01
X0133	XG.2001.150-11	108-38-3/106-42	p/m-Xylenes	ND	mg / Kg	10	0.01		02/01/01
X0133	XG.2001.150-11	108-88-3	Toluene	ND	mg / Kg	10	0.005		02/01/01

Client Sample ID ***ST-106 SB30 270'*** Sample Matrix ***SOIL*** Sample Collected *01/29/01 12:35:00*

QC Group	Run Sequence	CAS #	Analyte	Result	Units	Dilution Factor	Detection Limit	Code	Run Date
0101252-03A		**SW846 5030A/8015A GRO by GC/FID**							
X0114	XG 2001.129-4		Gasoline Range Organics	ND	mg / Kg	1	0.25		01/30/01
0101252-03B		**SW846 ME/8015A Diesel Range Organics by GC/FID**							
X018	XG 2001 130-4		Diesel Range Organics	63	mg / Kg	1	25		01/30/01

Certificate of Analysis

ıt: CH2MHILL

Project: 0101252 160660.02.FF.SA

0101252-03C SW846 8260A Purgeable VOCs by GC/MS

X0127	XG.2001.132-3	75-34-3	1,1 Dichloroethane	ND	mg / Kg	1	0.005		01/30/01
X0127	XG.2001.132-3	75-34-3	1,1 Dichloroethene	ND	mg / Kg	1	0.005		01/30/01
X0127	XG.2001.132-3	71-55-6	1,1,1 Trichloroethane	ND	mg / Kg	1	0.005		01/30/01
X0127	XG.2001.132-3	630-20-6	1,1,1,2 Tetrachloroethane	ND	mg / Kg	1	0.005		01/30/01
X0127	XG.2001.132-3	79-00-5	1,1,2 Trichloroethane	ND	mg / Kg	1	0.005		01/30/01
X0127	XG.2001.132-3	79-34-5	1,1,2,2 Tetrachloroethane	ND	mg / Kg	1	0.005		01/30/01
X0127	XG.2001.132-3	106-93-4	1,2 Dibromoethane (EDB)	ND	mg / Kg	1	0.005		01/30/01
X0127	XG.2001.132-3	95-50-1	1,2 Dichlorobenzene	ND	mg / Kg	1	0.005		01/30/01
X0127	XG.2001.132-3	107-06-2	1,2 Dichloroethane	ND	mg / Kg	1	0.005		01/30/01
X0127	XG.2001.132-3	78-87-5	1,2 Dichloropropane	ND	mg / Kg	1	0.005		01/30/01
X0127	XG.2001.132-3	96-18-4	1,2,3 Trichloropropane	ND	mg / Kg	1	0.005		01/30/01
X0127	XG.2001.132-3	95-63-6	1,2,4-Trimethylbenzene	ND	mg / Kg	1	0.005		01/30/01
X0127	XG.2001.132-3	541-73-1	1,3 Dichlorobenzene	ND	mg / Kg	1	0.005		01/30/01
X0127	XG.2001.132-3	108-67-8	1,3,5-Trimethylbenzene	ND	mg / Kg	1	0.005		01/30/01
X0127	XG.2001.132-3	764-41-0	1,4 Dichloro-2-butene	ND	mg / Kg	1	0.05		01/30/01
X0127	XG.2001.132-3	106-46-7	1,4 Dichlorobenzene	ND	mg / Kg	1	0.005		01/30/01
X0127	XG.2001.132-3	78-93-3	2-Butanone (MEK)	ND	mg / Kg	1	0.025		01/30/01
X0127	XG.2001.132-3	110-75-8	2-Chloroethylvinylether	ND	mg / Kg	1	0.025		01/30/01
X0127	XG.2001.132-3	591-78-6	2-Hexanone (MBK)	ND	mg / Kg	1	0.025		01/30/01
X0127	XG.2001.132-3	108-10-1	4-Methyl-2-pentanone (MIBK)	ND	mg / Kg	1	0.025		01/30/01
X0127	XG.2001.132-3	67-64-1	Acetone	ND	mg / Kg	1	0.05		01/30/01
	XG.2001.132-3	107-02-8	Acrolein	ND	mg / Kg	1	0.1		01/30/01
X0127	XG.2001.132-3	107-13-1	Acrylonitrile	ND	mg / Kg	1	0.1		01/30/01
X0127	XG.2001.132-3	71-43-2	Benzene	ND	mg / Kg	1	0.005		01/30/01
X0127	XG.2001.132-3	75-27-4	Bromodichloromethane	ND	mg / Kg	1	0.005		01/30/01
X0127	XG.2001.132-3	75-25-2	Bromoform	ND	mg / Kg	1	0.005		01/30/01
X0127	XG.2001.132-3	74-83-9	Bromomethane	ND	mg / Kg	1	0.025		01/30/01
X0127	XG.2001.132-3	75-15-0	Carbon disulfide	ND	mg / Kg	1	0.025		01/30/01
X0127	XG.2001.132-3	56-23-5	Carbon tetrachloride	ND	mg / Kg	1	0.005		01/30/01
X0127	XG.2001.132-3	108-90-7	Chlorobenzene	ND	mg / Kg	1	0.005		01/30/01
X0127	XG.2001.132-3	124-48-1	Chlorodibromomethane	ND	mg / Kg	1	0.005		01/30/01
X0127	XG.2001.132-3	75-00-3	Chloroethane	ND	mg / Kg	1	0.025		01/30/01
X0127	XG.2001.132-3	67-66-3	Chloroform	ND	mg / Kg	1	0.005		01/30/01
X0127	XG.2001.132-3	74-87-3	Chloromethane	ND	mg / Kg	1	0.025		01/30/01
X0127	XG.2001.132-3	156-59-2	cis-1,2 dichloroethene	ND	mg / Kg	1	0.005		01/30/01
X0127	XG.2001.132-3	10061-01-5	cis-1,3 dichloropropene	ND	mg / Kg	1	0.005		01/30/01
X0127	XG.2001.132-3	74-95-3	Dibromomethane	ND	mg / Kg	1	0.005		01/30/01
X0127	XG.2001.132-3	97-63-2	Ethyl methacrylate	ND	mg / Kg	1	0.025		01/30/01
X0127	XG.2001.132-3	100-41-4	Ethylbenzene	ND	mg / Kg	1	0.005		01/30/01
X0127	XG.2001.157-1		Freon 113	ND	mg / Kg	1	0.025	1	02/01/01
X0127	XG.2001.132-3	75-71-8	Freon 12	ND	mg / Kg	1	0.05		01/30/01
X0127	XG.2001.132-3	74-88-4	Iodomethane	ND	mg / Kg	1	0.025		01/30/01
X0127	XG.2001.132-3	1634-04-4	Methyl t-butyl ether (MTBE)	ND	mg / Kg	1	0.005		01/30/01
X0127	XG.2001.132-3	75-09-2	Methylene chloride	ND	mg / Kg	1	0.05		01/30/01
X0127	XG.2001.132-3	91-20-3	Naphthalene	ND	mg / Kg	1	0.025		01/30/01
X0127	XG.2001.132-3	95-47-6	o-Xylene	ND	mg / Kg	1	0.005		01/30/01
7	XG.2001.132-3	108-38-3/106-42	p/m Xylenes	ND	mg / Kg	1	0.01		01/30/01

Certificate of Analysis

RECEIVED MAR 1 2 200

Client: CH2MHILL

Project: 0101252 160660.02.FF.SA

X0127	XG.2001.132-3	100-42-5	Styrene	ND	mg / Kg	1	0.005	01/30/01
X0127	XG.2001.132-3	156-60-5	t-1,2 Dichloroethene	ND	mg / Kg	1	0.005	01/30/01
X0127	XG.2001.132-3	10061-02-6	t-1,3 Dichloropropene	ND	mg / Kg	1	0.005	01/30/01
X0127	XG.2001.132-3	127-18-4	Tetrachloroethene	ND	mg / Kg	1	0.005	01/30/01
X0127	XG.2001.132-3	108-88-3	Toluene	ND	mg / Kg	1	0.005	01/30/01
X0127	XG.2001.132-3	79-01-6	Trichloroethene	ND	mg / Kg	1	0.005	01/30/01
X0127	XG.2001.132-3	75-69-4	Trichlorofluoromethane	ND	mg / Kg	1	0.025	01/30/01
X0127	XG.2001.132-3	108-05-4	Vinyl acetate	ND	mg / Kg	1	0.025	01/30/01
X0127	XG.2001.132-3	75-01-4	Vinyl chloride	ND	mg / Kg	1	0.025	01/30/01

0101252-03D **SW846 3550A/8270B SVOCs by GC/MS**

X0128	XG.2001.274-3	120-82-1	1,2,4-Trichlorobenzene	ND	mg / Kg	1	0.03	01/30/01
X0128	XG.2001.274-3	95-50-1	1,2-Dichlorobenzene	ND	mg / Kg	1	0.03	01/30/01
X0128	XG.2001.274-3	541-73-1	1,3-Dichlorobenzene	ND	mg / Kg	1	0.03	01/30/01
X0128	XG.2001.274-3	106-46-7	1,4-Dichlorobenzene	ND	mg / Kg	1	0.03	01/30/01
X0128	XG.2001.274-3	90-12-0	1-Methylnaphthalene	ND	mg / Kg	1	0.03	01/30/01
X0128	XG.2001.274-3	58-90-2	2,3,4,6-Tetrachlorophenol	ND	mg / Kg	1	1.5	01/30/01
X0128	XG.2001.274-3	95-95-4	2,4,5-Trichlorophenol	ND	mg / Kg	1	0.3	01/30/01
X0128	XG.2001.274-3	88-06-2	2,4,6-Trichlorophenol	ND	mg / Kg	1	0.3	01/30/0
X0128	XG.2001.274-3	120-83-2	2,4-Dichlorophenol	ND	mg / Kg	1	0.3	01/30/0
X0128	XG.2001.274-3	105-67-9	2,4-Dimethylphenol	ND	mg / Kg	1	0.03	01/30/0
X0128	XG.2001.274-3	51-28-5	2,4-Dinitrophenol	ND	mg / Kg	1	0.67	01/30/0
X0128	XG.2001.274-3	121-14-2	2,4-Dinitrotoluene	ND	mg / Kg	1	0.3	01/30/
X0128	XG.2001.274-3	606-20-2	2,6-Dinitrotoluene	ND	mg / Kg	1	0.3	01/30
X0128	XG.2001.274-3	91-58-7	2-Chloronaphthalene	ND	mg / Kg	1	0.03	01/30/0
X0128	XG.2001.274-3	95-57-8	2-Chlorophenol	ND	mg / Kg	1	0.03	01/30/0
X0128	XG.2001.274-3	91-57-6	2-Methylnaphthalene	ND	mg / Kg	1	0.03	01/30/0
X0128	XG.2001.274-3	95-48-7	2-Methylphenol	ND	mg / Kg	1	0.03	01/30/0
X0128	XG.2001.274-3	88-74-4	2-Nitroaniline	ND	mg / Kg	1	0.3	01/30/0
X0128	XG.2001.274-3	88-75-5	2-Nitrophenol	ND	mg / Kg	1	0.3	01/30/0
X0128	XG.2001.274-3		3+4 Methylphenol	ND	mg / Kg	1	0.03	01/30/0
X0128	XG.2001.274-3	91-94-1	3,3-Dichlorobenzidine	ND	mg / Kg	1	0.3	01/30/0
X0128	XG.2001.274-3	99-09-2	3-Nitroaniline	ND	mg / Kg	1	0.3	01/30/0
X0128	XG.2001.274-3	534-52-1	4,6-Dinitro-2-methylphenol	ND	mg / Kg	1	0.3	01/30/0
X0128	XG.2001.274-3	101-55-3	4-Bromophenyl-phenylether	ND	mg / Kg	1	0.03	01/30/0
X0128	XG.2001.274-3	59-50-7	4-Chloro-3-methylphenol	ND	mg / Kg	1	0.3	01/30/0
X0128	XG.2001.274-3	106-47-8	4-Chloroaniline	ND	mg / Kg	1	0.3	01/30/0
X0128	XG.2001.274-3	7005-72-3	4-Chlorophenyl-phenylether	ND	mg / Kg	1	0.03	01/30/0
X0128	XG.2001.274-3	100-01-6	4-Nitroaniline	ND	mg / Kg	1	0.3	01/30/0
X0128	XG.2001.274-3	100-02-7	4-Nitrophenol	ND	mg / Kg	1	0.6	01/30/0
X0128	XG.2001.274-3	83-32-9	Acenaphthene	ND	mg / Kg	1	0.03	01/30/0
X0128	XG.2001.274-3	208-96-8	Acenaphthylene	ND	mg / Kg	1	0.03	01/30/0
X0128	XG.2001.274-3	62-53-3	Aniline	ND	mg / Kg	1	0.3	01/30/0
X0128	XG.2001.274-3	120-12-7	Anthracene	ND	mg / Kg	1	0.03	01/30/0
X0128	XG.2001.274-3		Azobenzene&1,2-Diphenylhydrazine	ND	mg / Kg	1	0.03	01/30/0
X0128	XG.2001.274-3	56-55-3	Benzo (a) anthracene	ND	mg / Kg	1	0.03	01/30/0
X0128	XG.2001.274-3	50-32-8	Benzo(a)pyrene	ND	mg / Kg	1	0.03	01/30/0
X0128	XG.2001.274-3		Benzo(b & k)fluoranthene	ND	mg / Kg	1	0.03	01/30

Certificate of Analysis

Client: **CH2MHILL**
Project: **0101252** **160660.02.FF.SA**

X0128	XG.2001.274-3	191-24-2	Benzo(g,h,i)perylene	ND	mg / Kg	1	0.3	01/30/01
X0128	XG.2001.274-3	64-85-0	Benzoic acid	ND	mg / Kg	1	3	01/30/01
X0128	XG.2001.274-3	100-51-6	Benzyl alcohol	ND	mg / Kg	1	1.5	01/30/01
X0128	XG.2001.274-3	111-44-4	bis (2-Chloroethyl) ether	ND	mg / Kg	1	0.03	01/30/01
X0128	XG.2001.274-3	111-91-1	bis(2-Chloroethoxy)methane	ND	mg / Kg	1	0.03	01/30/01
X0128	XG.2001.274-3	108-60-1	bis(2-Chloroisopropyl)ether	ND	mg / Kg	1	0.03	01/30/01
X0128	XG.2001.274-3	117-81-7	bis(2-Ethylhexyl)phthalate	0.40	mg / Kg	1	0.3	01/30/01
X0128	XG.2001.274-3	85-68-7	Butylbenzylphthalate	ND	mg / Kg	1	0.03	01/30/01
X0128	XG.2001.274-3	218-01-9	Chrysene	ND	mg / Kg	1	0.03	01/30/01
X0128	XG.2001.274-3	84-74-2	di-n-Butylphthalate	ND	mg / Kg	1	0.3	01/30/01
X0128	XG.2001.274-3	117-84-0	di-n-Octylpthalate	ND	mg / Kg	1	0.3	01/30/01
X0128	XG.2001.274-3	53-70-3	Dibenz(a,h)anthracene	ND	mg / Kg	1	0.3	01/30/01
X0128	XG.2001.274-3	132-64-9	Dibenzofuran	ND	mg / Kg	1	0.03	01/30/01
X0128	XG.2001.274-3	84-66-2	Diethylphthalate	ND	mg / Kg	1	0.03	01/30/01
X0128	XG.2001.274-3	131-11-3	Dimethylphthalate	ND	mg / Kg	1	0.03	01/30/01
X0128	XG.2001.274-3	206-44-0	Fluoranthene	ND	mg / Kg	1	0.03	01/30/01
X0128	XG.2001.274-3	86737	Fluorene	ND	mg / Kg	1	0.03	01/30/01
X0128	XG.2001.274-3	118-74-1	Hexachlorobenzene	ND	mg / Kg	1	0.03	01/30/01
X0128	XG.2001.274-3	87-68-3	Hexachlorobutadiene	ND	mg / Kg	1	0.03	01/30/01
X0128	XG.2001.274-3	77-47-4	Hexachlorocyclopentadiene	ND	mg / Kg	1	1.5	01/30/01
X0128	XG.2001.274-3	67-72-1	Hexachloroethane	ND	mg / Kg	1	0.03	01/30/01
X0128	XG.2001.274-3	193-39-5	Indeno(1,2,3-cd)pyrene	ND	mg / Kg	1	0.3	01/30/01
	XG.2001.274-3	78-59-1	Isophorone	ND	mg / Kg	1	0.03	01/30/01
[illegible]	XG.2001.274-3	621-64-7	n-Nitroso-di-n-propylamine	ND	mg / Kg	1	0.03	01/30/01
X0128	XG.2001.274-3	62-75-9	n-Nitroso-dimethyl-amine	ND	mg / Kg	1	0.3	01/30/01
X0128	XG.2001.274-3	86-30-6	n-Nitrosodiphenylamine	ND	mg / Kg	1	0.03	01/30/01
X0128	XG.2001.274-3	91-20-3	Naphthalene	ND	mg / Kg	1	0.03	01/30/01
X0128	XG.2001.274-3	98-95-3	Nitrobenzene	ND	mg / Kg	1	0.03	01/30/01
X0128	XG.2001.274-3	87-86-5	Pentachlorophenol	ND	mg / Kg	1	0.3	01/30/01
X0128	XG.2001.274-3	85-01-8	Phenanthrene	ND	mg / Kg	1	0.03	01/30/01
X0128	XG.2001.274-3	108-95-2	Phenol	ND	mg / Kg	1	0.3	01/30/01
X0128	XG.2001.274-3	129-00-0	Pyrene	ND	mg / Kg	1	0.03	01/30/01
X0128	XG.2001.274-3	110-86-1	Pyridine	ND	mg / Kg	1	0.3	01/30/01

Client Sample ID ***ST-106 SB30 300'*** Sample Matrix ***SOIL*** Sample Collected ***01/29/01 15:35:00***

QC Group	Run Sequence	CAS #	Analyte	Result	Units	Dilution Factor	Detection Limit	Code	Run Date
0101252-04A		**SW846 5030A/8015A GRO by GC/FID**							
X0114	XG.2001.129-5		Gasoline Range Organics	ND	mg / Kg	1	0.25		01/30/01
0101252-04B		**SW846 ME/8015A Diesel Range Organics by GC/FID**							
X018	XG.2001.130-5		Diesel Range Organics	420	mg / Kg	1	25		01/30/01
0101252-04C		**SW846 5030A/8021B Purgeable VOCs by GC/PID**							
[illegible]	XG.2001.150-5	71-43-2	Benzene	ND	mg / Kg	1	0.005		01/31/01
[illegible]	XG.2001.150-5	100-41-4	Ethylbenzene	ND	mg / Kg	1	0.005		01/31/01

Certificate of Analysis

Client: **CH2MHILL**

Project: **0101252** **160660.02.FF.SA**

X0133	XG.2001.150-5	95-47-6	o-Xylene	ND	mg / Kg	1	0.005	01/31/01
X0133	XG.2001.150-5	108-38-3/106-42	p/m-Xylenes	ND	mg / Kg	1	0.01	01/31/01
X0133	XG.2001.150-5	108-88-3	Toluene	ND	mg / Kg	1	0.005	01/31/01

**** Sample specific Detection Limit is determined by multiplying the sample Dilution Factor by the listed Reporting Detection Limit. ****

**** ND = Not detected: less than the sample specific Detection Limit. Results relate only to the items tested. ****

footnote [1] Sample was analyzed with headspace.

Quality Control Summary

Explanation of codes

D	*Not applicable due to sample dilution*
L	*Not applicable due to MDL proximity*

Client: **CH2MHILL**

Project: **0101252** **160660.02.FF.SA**

QC Type **LCS: Lab Control Spike** QC Matrix **SOLID**

QC Group	Run Sequence	CAS #	Analyte	Result	Units	Dilution Factor	Detection Limit	Code	Run Date
X0114-002		**SW846 5030A/8015A GRO by GC/FID**							
X0114	XG.2001.43-2		Gasoline Range Organics	110	% Recovery	1	NA		01/09/01
X0127-005		**SW846 8260A Purgeable VOCs by GC/MS**							
X0127	XG.2001.69-5	75-34-3	1,1 Dichloroethene	109	% Recovery	1	NA		01/18/01
X0127	XG.2001.69-5	106-46-7	1,4 Dichlorobenzene	100	% Recovery	1	NA		01/18/01
X0127	XG.2001.69-5	71-43-2	Benzene	113	% Recovery	1	NA		01/18/01
X0127	XG.2001.69-5	108-90-7	Chlorobenzene	106	% Recovery	1	NA		01/18/01
X0127	XG.2001.69-5	108-88-3	Toluene	108	% Recovery	1	NA		01/18/01
X0127	XG.2001.69-5	79-01-6	Trichloroethene	111	% Recovery	1	NA		01/18/01
X0128-002		**SW846 3550A/8270B SVOCs by GC/MS**							
X0128	XG.2001.83-2	120-82-1	1,2,4-Trichlorobenzene	72	% Recovery	1	NA		01/21/01
X0128	XG.2001.83-2	106-46-7	1,4-Dichlorobenzene	77	% Recovery	1	NA		01/21/01
X0128	XG.2001.83-2	121-14-2	2,4-Dinitrotoluene	79	% Recovery	1	NA		01/21/01
X0128	XG.2001.83-2	95-57-8	2-Chlorophenol	84	% Recovery	1	NA		01/21/01
X0128	XG.2001.83-2	59-50-7	4-Chloro-3-methylphenol	84	% Recovery	1	NA		01/21/01
[illegible]	XG.2001.83-2	100-02-7	4-Nitrophenol	94	% Recovery	1	NA		01/21/01
[illegible]	XG.2001.83-2	83-32-9	Acenaphthene	89	% Recovery	1	NA		01/21/01
X0128	XG.2001.83-2	117-84-0	di-n-Octylpthalate	95	% Recovery	1	NA		01/21/01
X0128	XG.2001.83-2	621-64-7	n-Nitroso-di-n-propylamine	81	% Recovery	1	NA		01/21/01
X0128	XG.2001.83-2	87-86-5	Pentachlorophenol	96	% Recovery	1	NA		01/21/01
X0128	XG.2001.83-2	108-95-2	Phenol	77	% Recovery	1	NA		01/21/01
X0128	XG.2001.83-2	129-00-0	Pyrene	89	% Recovery	1	NA		01/21/01
X0133-001		**SW846 5030A/8021B Purgeable VOCs by GC/PID**							
X0133	XG.2001.94-3	71-43-2	Benzene	108	% Recovery	1	NA		01/22/01
X0133	XG.2001.94-3	100-41-4	Ethylbenzene	110	% Recovery	1	NA		01/22/01
X0133	XG.2001.94-3	95-47-6	o-Xylene	109	% Recovery	1	NA		01/22/01
X0133	XG.2001.94-3	108-38-3/106-42	p/m-Xylenes	110	% Recovery	1	NA		01/22/01
X0133	XG.2001.94-3	108-88-3	Toluene	109	% Recovery	1	NA		01/22/01
X018-002		**SW846 ME/8015A Diesel Range Organics by GC/FID**							
X018	XG.2001.41-2		Diesel Range Organics	94	% Recovery	1	NA		01/09/01

QC Type **LCSD: Lab Control Spike Duplicate Accuracy** QC Matrix **SOLID**

QC Group	Run Sequence	CAS #	Analyte	Result	Units	Dilution Factor	Detection Limit	Code	Run Date
X0114-003		**SW846 5030A/8015A GRO by GC/FID**							
X0114	XG.2001.43-3		Gasoline Range Organics	106	% Recovery	1	NA		01/09/01
[illegible]27-006		**SW846 8260A Purgeable VOCs by GC/MS**							
[illegible]7	XG.2001.69-6	75-34-3	1,1 Dichloroethene	110	% Recovery	1	NA		01/18/01

Quality Control Summary

Client: **CH2MHILL**

Project: **0101252** **160660.02.FF.SA**

Explanation of codes

D *Not applicable due to sample dilut*

L *Not applicable due to MDL proxim*

X0127	XG.2001.69-6	106-46-7	1,4 Dichlorobenzene	108	% Recovery	1	NA		01/18/01
X0127	XG.2001.69-6	71-43-2	Benzene	115	% Recovery	1	NA		01/18/01
X0127	XG.2001.69-6	108-90-7	Chlorobenzene	113	% Recovery	1	NA		01/18/01
X0127	XG.2001.69-6	108-88-3	Toluene	113	% Recovery	1	NA		01/18/01
X0127	XG.2001.69-6	79-01-6	Trichloroethene	116	% Recovery	1	NA		01/18/01
X0128-003		**SW846 3550A/8270B SVOCs by GC/MS**							
X0128	XG.2001.83-3	120-82-1	1,2,4-Trichlorobenzene	68	% Recovery	1	NA		01/21/01
X0128	XG.2001.83-3	106-46-7	1,4-Dichlorobenzene	71	% Recovery	1	NA		01/21/01
X0128	XG.2001.83-3	121-14-2	2,4-Dinitrotoluene	78	% Recovery	1	NA		01/21/01
X0128	XG.2001.83-3	95-57-8	2-Chlorophenol	79	% Recovery	1	NA		01/21/01
X0128	XG.2001.83-3	59-50-7	4-Chloro-3-methylphenol	81	% Recovery	1	NA		01/21/01
X0128	XG.2001.83-3	100-02-7	4-Nitrophenol	91	% Recovery	1	NA		01/21/01
X0128	XG.2001.83-3	83-32-9	Acenaphthene	87	% Recovery	1	NA		01/21/01
X0128	XG.2001.83-3	117-84-0	di-n-Octylpthalate	94	% Recovery	1	NA		01/21/01
X0128	XG.2001.83-3	621-64-7	n-Nitroso-di-n-propylamine	78	% Recovery	1	NA		01/21/01
X0128	XG.2001.83-3	87-86-5	Pentachlorophenol	92	% Recovery	1	NA		01/21/01
X0128	XG.2001.83-3	108-95-2	Phenol	72	% Recovery	1	NA		01/21/01
X0128	XG.2001.83-3	129-00-0	Pyrene	87	% Recovery	1	NA		01/21/01
X0133-002		**SW846 5030A/8021B Purgeable VOCs by GC/PID**							
X0133	XG.2001.94-4	71-43-2	Benzene	99	% Recovery	1	NA		01/22/0
X0133	XG.2001.94-4	100-41-4	Ethylbenzene	99	% Recovery	1	NA		01/22/0
X0133	XG.2001.94-4	95-47-6	o-Xylene	97	% Recovery	1	NA		01/22/0
X0133	XG.2001.94-4	108-38-3/106-42	p/m-Xylenes	101	% Recovery	1	NA		01/22
X0133	XG.2001.94-4	108-88-3	Toluene	99	% Recovery	1	NA		01/22/0
X018-003		**SW846 ME/8015A Diesel Range Organics by GC/FID**							
X018	XG.2001.41-3		Diesel Range Organics	104	% Recovery	1	NA		01/09/0

QC Type **LCSD: Lab Control Spike Duplicate Precision** QC Matrix **SOLID**

QC Group	Run Sequence	CAS #	Analyte	Result	Units	Dilution Factor	Detection Limit	Code	Run Date
X0114-003		**SW846 5030A/8015A GRO by GC/FID**							
X0114	XG.2001.43-3		Gasoline Range Organics	4	RPD	1	NA		01/09/0
X0127-006		**SW846 8260A Purgeable VOCs by GC/MS**							
X0127	XG.2001.69-6	75-34-3	1,1 Dichloroethene	< 1	RPD	1	NA		01/18/0
X0127	XG.2001.69-6	106-46-7	1,4 Dichlorobenzene	7	RPD	1	NA		01/18/0
X0127	XG.2001.69-6	71-43-2	Benzene	2	RPD	1	NA		01/18/0
X0127	XG.2001.69-6	108-90-7	Chlorobenzene	7	RPD	1	NA		01/18/0
X0127	XG.2001.69-6	108-88-3	Toluene	5	RPD	1	NA		01/18/0
X0127	XG.2001.69-6	79-01-6	Trichloroethene	4	RPD	1	NA		01/18/0
X0128-003		**SW846 3550A/8270B SVOCs by GC/MS**							
X0128	XG.2001.83-3	120-82-1	1,2,4-Trichlorobenzene	6	RPD	1	NA		01/21/0
X0128	XG.2001.83-3	106-46-7	1,4-Dichlorobenzene	7	RPD	1	NA		01/21/0
X0128	XG.2001.83-3	121-14-2	2,4-Dinitrotoluene	< 1	RPD	1	NA		01/21/0
X0128	XG.2001.83-3	95-57-8	2-Chlorophenol	6	RPD	1	NA		01/21
X0128	XG.2001.83-3	59-50-7	4-Chloro-3-methylphenol	3	RPD	1	NA		01/21/0

Quality Control Summary

Client: CH2MHILL

Project: 0101252 160660.02.FF.SA

Explanation of codes

D	*Not applicable due to sample dilution*
L	*Not applicable due to MDL proximity*

X0128	XG.2001.83-3	100-02-7	4-Nitrophenol	3	RPD	1	NA		01/21/01
X0128	XG.2001.83-3	83-32-9	Acenaphthene	3	RPD	1	NA		01/21/01
X0128	XG.2001.83-3	117-84-0	di-n-Octylpthalate	< 1	RPD	1	NA		01/21/01
X0128	XG.2001.83-3	621-64-7	n-Nitroso-di-n-propylamine	4	RPD	1	NA		01/21/01
X0128	XG.2001.83-3	87-86-5	Pentachlorophenol	4	RPD	1	NA		01/21/01
X0128	XG.2001.83-3	108-95-2	Phenol	7	RPD	1	NA		01/21/01
X0128	XG.2001.83-3	129-00-0	Pyrene	3	RPD	1	NA		01/21/01
X0133-002		**SW846 5030A/8021B Purgeable VOCs by GC/PID**							
X0133	XG.2001.94-4	71-43-2	Benzene	9	RPD	1	NA		01/22/01
X0133	XG.2001.94-4	100-41-4	Ethylbenzene	10	RPD	1	NA		01/22/01
X0133	XG.2001.94-4	95-47-6	o-Xylene	11	RPD	1	NA		01/22/01
X0133	XG.2001.94-4	108-38-3/106-42	p/m-Xylenes	9	RPD	1	NA		01/22/01
X0133	XG.2001.94-4	108-88-3	Toluene	9	RPD	1	NA		01/22/01
X018-003		**SW846 ME/8015A Diesel Range Organics by GC/FID**							
X018	XG.2001.41-3		Diesel Range Organics	10	RPD	1	NA		01/09/01

QC Type **MB: Method Blank** QC Matrix **SOLID**

QC Group	Run Sequence	CAS #	Analyte	Result	Units	Dilution Factor	Detection Limit	Code	Run Date
[illegible]-001		**SW846 5030A/8015A GRO by GC/FID**							
X0114	XG.2001.43-1		Gasoline Range Organics	ND	mg / Kg	1	0.25		01/09/01
X0114-010		**SW846 5030A/8015A GRO by GC/FID**							
X0114	XG.2001.56-1		Gasoline Range Organics	ND	mg / Kg	1	0.25		01/10/01
X0114-014		**SW846 5030A/8015A GRO by GC/FID**							
X0114	XG.2001.120-1		Gasoline Range Organics	ND	mg / Kg	1	0.25		01/26/01
X0114-018		**SW846 5030A/8015A GRO by GC/FID**							
X0114	XG.2001.129-1		Gasoline Range Organics	ND	mg / Kg	1	0.25		01/30/01
X0114-026		**SW846 5030A/8015A GRO by GC/FID**							
X0114	XG.2001.149-1		Gasoline Range Organics	ND	mg / Kg	1	0.25		02/01/01
X0114-029		**SW846 5030A/8015A GRO by GC/FID**							
X0114	XG.2001.168-1		Gasoline Range Organics	ND	mg / Kg	1	0.25		02/07/01
X0127-001		**SW846 8260A Purgeable VOCs by GC/MS**							
X0127	XG.2001.69-1	75-34-3	1,1 Dichloroethane	ND	mg / Kg	1	0.005		01/18/01
X0127	XG.2001.69-1	75-34-3	1,1 Dichloroethene	ND	mg / Kg	1	0.005		01/18/01
X0127	XG.2001.69-1	71-55-6	1,1,1 Trichloroethane	ND	mg / Kg	1	0.005		01/18/01
X0127	XG.2001.69-1	630-20-6	1,1,1,2 Tetrachloroethane	ND	mg / Kg	1	0.005		01/18/01
X0127	XG.2001.69-1	79-00-5	1,1,2 Trichloroethane	ND	mg / Kg	1	0.005		01/18/01
X0127	XG.2001.69-1	79-34-5	1,1,2,2 Tetrachloroethane	ND	mg / Kg	1	0.005		01/18/01
X0127	XG.2001.69-1	106-93-4	1,2 Dibromoethane (EDB)	ND	mg / Kg	1	0.005		01/18/01
X0127	XG.2001.69-1	95-50-1	1,2 Dichlorobenzene	ND	mg / Kg	1	0.005		01/18/01
X0127	XG.2001.69-1	107-06-2	1,2 Dichloroethane	ND	mg / Kg	1	0.005		01/18/01
[illegible]	XG.2001.69-1	78-87-5	1,2 Dichloropropane	ND	mg / Kg	1	0.005		01/18/01
[illegible]	XG.2001.69-1	96-18-4	1,2,3 Trichloropropane	ND	mg / Kg	1	0.005		01/18/01

Quality Control Summary

Client: **CH2MHILL**

Project: **0101252** **160660.02.FF.SA**

Explanation of codes

D *Not applicable due to sample dilu*

L *Not applicable due to MDL proximi*

X0127	XG.2001.69-1	95-63-6	1,2,4-Trimethylbenzene	ND	mg / Kg	1	0.005	01/18/01
X0127	XG.2001.69-1	541-73-1	1,3 Dichlorobenzene	ND	mg / Kg	1	0.005	01/18/01
X0127	XG.2001.69-1	108-67-8	1,3,5-Trimethylbenzene	ND	mg / Kg	1	0.005	01/18/01
X0127	XG.2001.69-1	764-41-0	1,4 Dichloro-2-butene	ND	mg / Kg	1	0.05	01/18/01
X0127	XG.2001.69-1	106-46-7	1,4 Dichlorobenzene	ND	mg / Kg	1	0.005	01/18/01
X0127	XG.2001.69-1	78-93-3	2-Butanone (MEK)	ND	mg / Kg	1	0.025	01/18/01
X0127	XG.2001.69-1	110-75-8	2-Chloroethylvinylether	ND	mg / Kg	1	0.025	01/18/01
X0127	XG.2001.69-1	591-78-6	2-Hexanone (MBK)	ND	mg / Kg	1	0.025	01/18/01
X0127	XG.2001.69-1	108-10-1	4-Methyl-2-pentanone (MIBK)	ND	mg / Kg	1	0.025	01/18/01
X0127	XG.2001.69-1	67-64-1	Acetone	ND	mg / Kg	1	0.05	01/18/01
X0127	XG.2001.69-1	107-02-8	Acrolein	ND	mg / Kg	1	0.1	01/18/01
X0127	XG.2001.69-1	107-13-1	Acrylonitrile	ND	mg / Kg	1	0.1	01/18/01
X0127	XG.2001.69-1	71-43-2	Benzene	ND	mg / Kg	1	0.005	01/18/0
X0127	XG.2001.69-1	75-27-4	Bromodichloromethane	ND	mg / Kg	1	0.005	01/18/0
X0127	XG.2001.69-1	75-25-2	Bromoform	ND	mg / Kg	1	0.005	01/18/0
X0127	XG.2001.69-1	74-83-9	Bromomethane	ND	mg / Kg	1	0.025	01/18/0
X0127	XG.2001.69-1	75-15-0	Carbon disulfide	ND	mg / Kg	1	0.025	01/18/0
X0127	XG.2001.69-1	56-23-5	Carbon tetrachloride	ND	mg / Kg	1	0.005	01/18/0
X0127	XG.2001.69-1	108-90-7	Chlorobenzene	ND	mg / Kg	1	0.005	01/18/0
X0127	XG.2001.69-1	124-48-1	Chlorodibromomethane	ND	mg / Kg	1	0.005	01/18/0
X0127	XG.2001.69-1	75-00-3	Chloroethane	ND	mg / Kg	1	0.025	01/18/0
X0127	XG.2001.69-1	67-66-3	Chloroform	ND	mg / Kg	1	0.005	01/18/0
X0127	XG.2001.69-1	74-87-3	Chloromethane	ND	mg / Kg	1	0.025	01/18/0
X0127	XG.2001.69-1	156-59-2	cis-1,2 dichloroethene	ND	mg / Kg	1	0.005	01/18
X0127	XG.2001.69-1	10061-01-5	cis-1,3 dichloropropene	ND	mg / Kg	1	0.005	01/18/0
X0127	XG.2001.69-1	74-95-3	Dibromomethane	ND	mg / Kg	1	0.005	01/18/0
X0127	XG.2001.69-1	97-63-2	Ethyl methacrylate	ND	mg / Kg	1	0.025	01/18/0
X0127	XG.2001.69-1	100-41-4	Ethylbenzene	ND	mg / Kg	1	0.005	01/18/0
X0127	XG.2001.69-1		Freon 113	ND	mg / Kg	1	0.025	01/18/0
X0127	XG.2001.69-1	75-71-8	Freon 12	ND	mg / Kg	1	0.05	01/18/0
X0127	XG.2001.69-1	74-88-4	Iodomethane	ND	mg / Kg	1	0.025	01/18/01
X0127	XG.2001.69-1	1634-04-4	Methyl t-butyl ether (MTBE)	ND	mg / Kg	1	0.005	01/18/0
X0127	XG.2001.69-1	75-09-2	Methylene chloride	ND	mg / Kg	1	0.05	01/18/01
X0127	XG.2001.69-1	91-20-3	Naphthalene	ND	mg / Kg	1	0.025	01/18/01
X0127	XG.2001.69-1	95-47-6	o-Xylene	ND	mg / Kg	1	0.005	01/18/01
X0127	XG.2001.69-1	108-38-3/106-42	p/m Xylenes	ND	mg / Kg	1	0.01	01/18/01
X0127	XG.2001.69-1	100-42-5	Styrene	ND	mg / Kg	1	0.005	01/18/01
X0127	XG.2001.69-1	156-60-5	t-1,2 Dichloroethene	ND	mg / Kg	1	0.005	01/18/01
X0127	XG.2001.69-1	10061-02-6	t-1,3 Dichloropropene	ND	mg / Kg	1	0.005	01/18/01
X0127	XG.2001.69-1	127-18-4	Tetrachloroethene	ND	mg / Kg	1	0.005	01/18/01
X0127	XG.2001.69-1	108-88-3	Toluene	ND	mg / Kg	1	0.005	01/18/01
X0127	XG.2001.69-1	79-01-6	Trichloroethene	ND	mg / Kg	1	0.005	01/18/01
X0127	XG.2001.69-1	75-69-4	Trichlorofluoromethane	ND	mg / Kg	1	0.025	01/18/01
X0127	XG.2001.69-1	108-05-4	Vinyl acetate	ND	mg / Kg	1	0.025	01/18/01
X0127	XG.2001.69-1	75-01-4	Vinyl chloride	ND	mg / Kg	1	0.025	01/18/01
X0127-011		SW846 8260A Purgeable VOCs by GC/MS						
X0127	XG.2001.80-1	75-34-3	1,1 Dichloroethane	ND	mg / Kg	1	0.005	01/22/01
X0127	XG.2001.80-1	75-34-3	1,1 Dichloroethene	ND	mg / Kg	1	0.005	01/22/0
X0127	XG.2001.80-1	71-55-6	1,1,1 Trichloroethane	ND	mg / Kg	1	0.005	01/22/

Quality Control Summary

Explanation of codes

D *Not applicable due to sample dilution*
L *Not applicable due to MDL proximity*

Client: **CH2MHILL**
Project: **0101252** **160660.02.FF.SA**

X0127	XG.2001.80-1	630-20-6	1,1,1,2 Tetrachloroethane	ND	mg / Kg	1	0.005		01/22/01
X0127	XG.2001.80-1	79-00-5	1,1,2 Trichloroethane	ND	mg / Kg	1	0.005		01/22/01
X0127	XG.2001.80-1	79-34-5	1,1,2,2 Tetrachloroethane	ND	mg / Kg	1	0.005		01/22/01
X0127	XG.2001.80-1	106-93-4	1,2 Dibromoethane (EDB)	ND	mg / Kg	1	0.005		01/22/01
X0127	XG.2001.80-1	95-50-1	1,2 Dichlorobenzene	ND	mg / Kg	1	0.005		01/22/01
X0127	XG.2001.80-1	107-06-2	1,2 Dichloroethane	ND	mg / Kg	1	0.005		01/22/01
X0127	XG.2001.80-1	78-87-5	1,2 Dichloropropane	ND	mg / Kg	1	0.005		01/22/01
X0127	XG.2001.80-1	96-18-4	1,2,3 Trichloropropane	ND	mg / Kg	1	0.005		01/22/01
X0127	XG.2001.80-1	95-63-6	1,2,4-Trimethylbenzene	ND	mg / Kg	1	0.005		01/22/01
X0127	XG.2001.80-1	541-73-1	1,3 Dichlorobenzene	ND	mg / Kg	1	0.005		01/22/01
X0127	XG.2001.80-1	108-67-8	1,3,5-Trimethylbenzene	ND	mg / Kg	1	0.005		01/22/01
X0127	XG.2001.80-1	764-41-0	1,4 Dichloro-2-butene	ND	mg / Kg	1	0.05		01/22/01
X0127	XG.2001.80-1	106-46-7	1,4 Dichlorobenzene	ND	mg / Kg	1	0.005		01/22/01
X0127	XG.2001.80-1	78-93-3	2-Butanone (MEK)	ND	mg / Kg	1	0.025		01/22/01
X0127	XG.2001.80-1	110-75-8	2-Chloroethylvinylether	ND	mg / Kg	1	0.025		01/22/01
X0127	XG.2001.80-1	591-78-6	2-Hexanone (MBK)	ND	mg / Kg	1	0.025		01/22/01
X0127	XG.2001.80-1	108-10-1	4-Methyl-2-pentanone (MIBK)	ND	mg / Kg	1	0.025		01/22/01
X0127	XG.2001.80-1	67-64-1	Acetone	ND	mg / Kg	1	0.05		01/22/01
X0127	XG.2001.80-1	107-02-8	Acrolein	ND	mg / Kg	1	0.1		01/22/01
X0127	XG.2001.80-1	107-13-1	Acrylonitrile	ND	mg / Kg	1	0.1		01/22/01
X0127	XG.2001.80-1	71-43-2	Benzene	ND	mg / Kg	1	0.005		01/22/01
X0127	XG.2001.80-1	75-27-4	Bromodichloromethane	ND	mg / Kg	1	0.005		01/22/01
X0127	XG.2001.80-1	75-25-2	Bromoform	ND	mg / Kg	1	0.005		01/22/01
	XG.2001.80-1	74-83-9	Bromomethane	ND	mg / Kg	1	0.025		01/22/01
X0127	XG.2001.80-1	75-15-0	Carbon disulfide	ND	mg / Kg	1	0.025		01/22/01
X0127	XG.2001.80-1	56-23-5	Carbon tetrachloride	ND	mg / Kg	1	0.005		01/22/01
X0127	XG.2001.80-1	108-90-7	Chlorobenzene	ND	mg / Kg	1	0.005		01/22/01
X0127	XG.2001.80-1	124-48-1	Chlorodibromomethane	ND	mg / Kg	1	0.005		01/22/01
X0127	XG.2001.80-1	75-00-3	Chloroethane	ND	mg / Kg	1	0.025		01/22/01
X0127	XG.2001.80-1	67-66-3	Chloroform	ND	mg / Kg	1	0.005		01/22/01
X0127	XG.2001.80-1	74-87-3	Chloromethane	ND	mg / Kg	1	0.025		01/22/01
X0127	XG.2001.80-1	156-59-2	cis-1,2 dichloroethene	ND	mg / Kg	1	0.005		01/22/01
X0127	XG.2001.80-1	10061-01-5	cis-1,3 dichloropropene	ND	mg / Kg	1	0.005		01/22/01
X0127	XG.2001.80-1	74-95-3	Dibromomethane	ND	mg / Kg	1	0.005		01/22/01
X0127	XG.2001.80-1	97-63-2	Ethyl methacrylate	ND	mg / Kg	1	0.025		01/22/01
X0127	XG.2001.80-1	100-41-4	Ethylbenzene	ND	mg / Kg	1	0.005		01/22/01
X0127	XG.2001.80-1		Freon 113	ND	mg / Kg	1	0.025		01/22/01
X0127	XG.2001.80-1	75-71-8	Freon 12	ND	mg / Kg	1	0.05		01/22/01
X0127	XG.2001.80-1	74-88-4	Iodomethane	ND	mg / Kg	1	0.025		01/22/01
X0127	XG.2001.80-1	1634-04-4	Methyl t-butyl ether (MTBE)	ND	mg / Kg	1	0.005		01/22/01
X0127	XG.2001.80-1	75-09-2	Methylene chloride	ND	mg / Kg	1	0.05		01/22/01
X0127	XG.2001.80-1	91-20-3	Naphthalene	ND	mg / Kg	1	0.025		01/22/01
X0127	XG.2001.80-1	95-47-6	o-Xylene	ND	mg / Kg	1	0.005		01/22/01
X0127	XG.2001.80-1	108-38-3/106-42	p/m Xylenes	ND	mg / Kg	1	0.01		01/22/01
X0127	XG.2001.80-1	100-42-5	Styrene	ND	mg / Kg	1	0.005		01/22/01
X0127	XG.2001.80-1	156-60-5	t-1,2 Dichloroethene	ND	mg / Kg	1	0.005		01/22/01
X0127	XG.2001.80-1	10061-02-6	t-1,3 Dichloropropene	ND	mg / Kg	1	0.005		01/22/01
X0127	XG.2001.80-1	127-18-4	Tetrachloroethene	ND	mg / Kg	1	0.005		01/22/01
	XG.2001.80-1	108-88-3	Toluene	ND	mg / Kg	1	0.005		01/22/01
X0127	XG.2001.80-1	79-01-6	Trichloroethene	ND	mg / Kg	1	0.005		01/22/01

RECEIVED MAR 1 2 2001

Quality Control Summary

Client: CH2MHILL

Project: 0101252 160660.02.FF.SA

Explanation of codes

D Not applicable due to sample dilut

L Not applicable due to MDL proximi

X0127	XG.2001.80-1	75-69-4	Trichlorofluoromethane	ND	mg / Kg	1	0.025	01/22/01
X0127	XG.2001.80-1	108-05-4	Vinyl acetate	ND	mg / Kg	1	0.025	01/22/01
X0127	XG.2001.80-1	75-01-4	Vinyl chloride	ND	mg / Kg	1	0.025	01/22/01
X0127-014		**SW846 8260A Purgeable VOCs by GC/MS**						
X0127	XG.2001.80-3	75-34-3	1,1 Dichloroethane	ND	mg / Kg	1	0.005	01/22/01
X0127	XG.2001.80-3	75-34-3	1,1 Dichloroethene	ND	mg / Kg	1	0.005	01/22/01
X0127	XG.2001.80-3	71-55-6	1,1,1 Trichloroethane	ND	mg / Kg	1	0.005	01/22/01
X0127	XG.2001.80-3	630-20-6	1,1,1,2 Tetrachloroethane	ND	mg / Kg	1	0.005	01/22/01
X0127	XG.2001.80-3	79-00-5	1,1,2 Trichloroethane	ND	mg / Kg	1	0.005	01/22/01
X0127	XG.2001.80-3	79-34-5	1,1,2,2 Tetrachloroethane	ND	mg / Kg	1	0.005	01/22/01
X0127	XG.2001.80-3	106-93-4	1,2 Dibromoethane (EDB)	ND	mg / Kg	1	0.005	01/22/01
X0127	XG.2001.80-3	95-50-1	1,2 Dichlorobenzene	ND	mg / Kg	1	0.005	01/22/01
X0127	XG.2001.80-3	107-06-2	1,2 Dichloroethane	ND	mg / Kg	1	0.005	01/22/01
X0127	XG.2001.80-3	78-87-5	1,2 Dichloropropane	ND	mg / Kg	1	0.005	01/22/01
X0127	XG.2001.80-3	96-18-4	1,2,3 Trichloropropane	ND	mg / Kg	1	0.005	01/22/01
X0127	XG.2001.80-3	95-63-6	1,2,4-Trimethylbenzene	ND	mg / Kg	1	0.005	01/22/01
X0127	XG.2001.80-3	541-73-1	1,3 Dichlorobenzene	ND	mg / Kg	1	0.005	01/22/01
X0127	XG.2001.80-3	108-67-8	1,3,5-Trimethylbenzene	ND	mg / Kg	1	0.005	01/22/01
X0127	XG.2001.80-3	764-41-0	1,4 Dichloro-2-butene	ND	mg / Kg	1	0.05	01/22/0
X0127	XG.2001.80-3	106-46-7	1,4 Dichlorobenzene	ND	mg / Kg	1	0.005	01/22/0
X0127	XG.2001.80-3	78-93-3	2-Butanone (MEK)	ND	mg / Kg	1	0.025	01/22/0
X0127	XG.2001.80-3	110-75-8	2-Chloroethylvinylether	ND	mg / Kg	1	0.025	01/22/0
X0127	XG.2001.80-3	591-78-6	2-Hexanone (MBK)	ND	mg / Kg	1	0.025	01/22/
X0127	XG.2001.80-3	108-10-1	4-Methyl-2-pentanone (MIBK)	ND	mg / Kg	1	0.025	01/22
X0127	XG.2001.80-3	67-64-1	Acetone	ND	mg / Kg	1	0.05	01/22/0
X0127	XG.2001.80-3	107-02-8	Acrolein	ND	mg / Kg	1	0.1	01/22/0
X0127	XG.2001.80-3	107-13-1	Acrylonitrile	ND	mg / Kg	1	0.1	01/22/0
X0127	XG.2001.80-3	71-43-2	Benzene	ND	mg / Kg	1	0.005	01/22/0
X0127	XG.2001.80-3	75-27-4	Bromodichloromethane	ND	mg / Kg	1	0.005	01/22/0
X0127	XG.2001.80-3	75-25-2	Bromoform	ND	mg / Kg	1	0.005	01/22/0
X0127	XG.2001.80-3	74-83-9	Bromomethane	ND	mg / Kg	1	0.025	01/22/0
X0127	XG.2001.80-3	75-15-0	Carbon disulfide	ND	mg / Kg	1	0.025	01/22/0
X0127	XG.2001.80-3	56-23-5	Carbon tetrachloride	ND	mg / Kg	1	0.005	01/22/0
X0127	XG.2001.80-3	108-90-7	Chlorobenzene	ND	mg / Kg	1	0.005	01/22/0
X0127	XG.2001.80-3	124-48-1	Chlorodibromomethane	ND	mg / Kg	1	0.005	01/22/0
X0127	XG.2001.80-3	75-00-3	Chloroethane	ND	mg / Kg	1	0.025	01/22/0
X0127	XG.2001.80-3	67-66-3	Chloroform	ND	mg / Kg	1	0.005	01/22/0
X0127	XG.2001.80-3	74-87-3	Chloromethane	ND	mg / Kg	1	0.025	01/22/0
X0127	XG.2001.80-3	156-59-2	cis-1,2 dichloroethene	ND	mg / Kg	1	0.005	01/22/0
X0127	XG.2001.80-3	10061-01-5	cis-1,3 dichloropropene	ND	mg / Kg	1	0.005	01/22/0
X0127	XG.2001.80-3	74-95-3	Dibromomethane	ND	mg / Kg	1	0.005	01/22/0
X0127	XG.2001.80-3	97-63-2	Ethyl methacrylate	ND	mg / Kg	1	0.025	01/22/0
X0127	XG.2001.80-3	100-41-4	Ethylbenzene	ND	mg / Kg	1	0.005	01/22/0
X0127	XG.2001.80-3		Freon 113	ND	mg / Kg	1	0.025	01/22/0
X0127	XG.2001.80-3	75-71-8	Freon 12	ND	mg / Kg	1	0.05	01/22/0
X0127	XG.2001.80-3	74-88-4	Iodomethane	ND	mg / Kg	1	0.025	01/22/0
X0127	XG.2001.80-3	1634-04-4	Methyl t-butyl ether (MTBE)	ND	mg / Kg	1	0.005	01/22/0
X0127	XG.2001.80-3	75-09-2	Methylene chloride	ND	mg / Kg	1	0.05	01/22/0
X0127	XG.2001.80-3	91-20-3	Naphthalene	ND	mg / Kg	1	0.025	01/22
X0127	XG.2001.80-3	95-47-6	o-Xylene	ND	mg / Kg	1	0.005	01/22/0

Explanation of codes

D *Not applicable due to sample dilution*
L *Not applicable due to MDL proximity*

nt: CH2MHILL
ject: 0101252 160660.02.FF.SA

X0127	XG.2001.80-3	108-38-3/106-42	p/m Xylenes	ND	mg / Kg	1	0.01	01/22/01
X0127	XG.2001.80-3	100-42-5	Styrene	ND	mg / Kg	1	0.005	01/22/01
X0127	XG.2001.80-3	156-60-5	t-1,2 Dichloroethene	ND	mg / Kg	1	0.005	01/22/01
X0127	XG.2001.80-3	10061-02-6	t-1,3 Dichloropropene	ND	mg / Kg	1	0.005	01/22/01
X0127	XG.2001.80-3	127-18-4	Tetrachloroethene	ND	mg / Kg	1	0.005	01/22/01
X0127	XG.2001.80-3	108-88-3	Toluene	ND	mg / Kg	1	0.005	01/22/01
X0127	XG.2001.80-3	79-01-6	Trichloroethene	ND	mg / Kg	1	0.005	01/22/01
X0127	XG.2001.80-3	75-69-4	Trichlorofluoromethane	ND	mg / Kg	1	0.025	01/22/01
X0127	XG.2001.80-3	108-05-4	Vinyl acetate	ND	mg / Kg	1	0.025	01/22/01
X0127	XG.2001.80-3	75-01-4	Vinyl chloride	ND	mg / Kg	1	0.025	01/22/01
X0127-016		**SW846 8260A Purgeable VOCs by GC/MS**						
X0127	XG.2001.117-1	75-34-3	1,1 Dichloroethane	ND	mg / Kg	1	0.005	01/25/01
X0127	XG.2001.117-1	75-34-3	1,1 Dichloroethene	ND	mg / Kg	1	0.005	01/25/01
X0127	XG.2001.117-1	71-55-6	1,1,1 Trichloroethane	ND	mg / Kg	1	0.005	01/25/01
X0127	XG.2001.117-1	630-20-6	1,1,1,2 Tetrachloroethane	ND	mg / Kg	1	0.005	01/25/01
X0127	XG.2001.117-1	79-00-5	1,1,2 Trichloroethane	ND	mg / Kg	1	0.005	01/25/01
X0127	XG.2001.117-1	79-34-5	1,1,2,2 Tetrachloroethane	ND	mg / Kg	1	0.005	01/25/01
X0127	XG.2001.117-1	106-93-4	1,2 Dibromoethane (EDB)	ND	mg / Kg	1	0.005	01/25/01
X0127	XG.2001.117-1	95-50-1	1,2 Dichlorobenzene	ND	mg / Kg	1	0.005	01/25/01
X0127	XG.2001.117-1	107-06-2	1,2 Dichloroethane	ND	mg / Kg	1	0.005	01/25/01
X0127	XG.2001.117-1	78-87-5	1,2 Dichloropropane	ND	mg / Kg	1	0.005	01/25/01
X0127	XG.2001.117-1	96-18-4	1,2,3 Trichloropropane	ND	mg / Kg	1	0.005	01/25/01
	XG.2001.117-1	95-63-6	1,2,4-Trimethylbenzene	ND	mg / Kg	1	0.005	01/25/01
X0127	XG.2001.117-1	541-73-1	1,3 Dichlorobenzene	ND	mg / Kg	1	0.005	01/25/01
X0127	XG.2001.117-1	108-67-8	1,3,5-Trimethylbenzene	ND	mg / Kg	1	0.005	01/25/01
X0127	XG.2001.117-1	764-41-0	1,4 Dichloro-2-butene	ND	mg / Kg	1	0.05	01/25/01
X0127	XG.2001.117-1	106-46-7	1,4 Dichlorobenzene	ND	mg / Kg	1	0.005	01/25/01
X0127	XG.2001.117-1	78-93-3	2-Butanone (MEK)	ND	mg / Kg	1	0.025	01/25/01
X0127	XG.2001.117-1	110-75-8	2-Chloroethylvinylether	ND	mg / Kg	1	0.025	01/25/01
X0127	XG.2001.117-1	591-78-6	2-Hexanone (MBK)	ND	mg / Kg	1	0.025	01/25/01
X0127	XG.2001.117-1	108-10-1	4-Methyl-2-pentanone (MIBK)	ND	mg / Kg	1	0.025	01/25/01
X0127	XG.2001.117-1	67-64-1	Acetone	ND	mg / Kg	1	0.05	01/25/01
X0127	XG.2001.117-1	107-02-8	Acrolein	ND	mg / Kg	1	0.1	01/25/01
X0127	XG.2001.117-1	107-13-1	Acrylonitrile	ND	mg / Kg	1	0.1	01/25/01
X0127	XG.2001.117-1	71-43-2	Benzene	ND	mg / Kg	1	0.005	01/25/01
X0127	XG.2001.117-1	75-27-4	Bromodichloromethane	ND	mg / Kg	1	0.005	01/25/01
X0127	XG.2001.117-1	75-25-2	Bromoform	ND	mg / Kg	1	0.005	01/25/01
X0127	XG.2001.117-1	74-83-9	Bromomethane	ND	mg / Kg	1	0.025	01/25/01
X0127	XG.2001.117-1	75-15-0	Carbon disulfide	ND	mg / Kg	1	0.025	01/25/01
X0127	XG.2001.117-1	56-23-5	Carbon tetrachloride	ND	mg / Kg	1	0.005	01/25/01
X0127	XG.2001.117-1	108-90-7	Chlorobenzene	ND	mg / Kg	1	0.005	01/25/01
X0127	XG.2001.117-1	124-48-1	Chlorodibromomethane	ND	mg / Kg	1	0.005	01/25/01
X0127	XG.2001.117-1	75-00-3	Chloroethane	ND	mg / Kg	1	0.025	01/25/01
X0127	XG.2001.117-1	67-66-3	Chloroform	ND	mg / Kg	1	0.005	01/25/01
X0127	XG.2001.117-1	74-87-3	Chloromethane	ND	mg / Kg	1	0.025	01/25/01
X0127	XG.2001.117-1	156-59-2	cis-1,2 dichloroethene	ND	mg / Kg	1	0.005	01/25/01
X0127	XG.2001.117-1	10061-01-5	cis-1,3 dichloropropene	ND	mg / Kg	1	0.005	01/25/01
7	XG.2001.117-1	74-95-3	Dibromomethane	ND	mg / Kg	1	0.005	01/25/01
7	XG.2001.117-1	97-63-2	Ethyl methacrylate	ND	mg / Kg	1	0.025	01/25/01

Quality Control Summary

Client: **CH2MHILL**

Project: **0101252** **160660.02.FF.SA**

Explanation of codes

D *Not applicable due to sample dilu*

L *Not applicable due to MDL proxim*

X0127	XG.2001.117-1	100-41-4	Ethylbenzene	ND	mg / Kg	1	0.005	01/25/01
X0127	XG.2001.117-1		Freon 113	ND	mg / Kg	1	0.025	01/25/01
X0127	XG.2001.117-1	75-71-8	Freon 12	ND	mg / Kg	1	0.05	01/25/01
X0127	XG.2001.117-1	74-88-4	Iodomethane	ND	mg / Kg	1	0.025	01/25/01
X0127	XG.2001.117-1	1634-04-4	Methyl t-butyl ether (MTBE)	ND	mg / Kg	1	0.005	01/25/01
X0127	XG.2001.117-1	75-09-2	Methylene chloride	ND	mg / Kg	1	0.05	01/25/01
X0127	XG.2001.117-1	91-20-3	Naphthalene	ND	mg / Kg	1	0.025	01/25/01
X0127	XG.2001.117-1	95-47-6	o-Xylene	ND	mg / Kg	1	0.005	01/25/01
X0127	XG.2001.117-1	108-38-3/106-42	p/m Xylenes	ND	mg / Kg	1	0.01	01/25/01
X0127	XG.2001.117-1	100-42-5	Styrene	ND	mg / Kg	1	0.005	01/25/01
X0127	XG.2001.117-1	156-60-5	t-1,2 Dichloroethene	ND	mg / Kg	1	0.005	01/25/01
X0127	XG.2001.117-1	10061-02-6	t-1,3 Dichloropropene	ND	mg / Kg	1	0.005	01/25/01
X0127	XG.2001.117-1	127-18-4	Tetrachloroethene	ND	mg / Kg	1	0.005	01/25/01
X0127	XG.2001.117-1	108-88-3	Toluene	ND	mg / Kg	1	0.005	01/25/01
X0127	XG.2001.117-1	79-01-6	Trichloroethene	ND	mg / Kg	1	0.005	01/25/01
X0127	XG.2001.117-1	75-69-4	Trichlorofluoromethane	ND	mg / Kg	1	0.025	01/25/01
X0127	XG.2001.117-1	108-05-4	Vinyl acetate	ND	mg / Kg	1	0.025	01/25/01
X0127	XG.2001.117-1	75-01-4	Vinyl chloride	ND	mg / Kg	1	0.025	01/25/01

X0127-019 **SW846 8260A Purgeable VOCs by GC/MS**

X0127	XG.2001.124-1	75-34-3	1,1 Dichloroethane	ND	mg / Kg	1	0.005	01/29/01
X0127	XG.2001.124-1	75-34-3	1,1 Dichloroethene	ND	mg / Kg	1	0.005	01/29/01
X0127	XG.2001.124-1	71-55-6	1,1,1 Trichloroethane	ND	mg / Kg	1	0.005	01/29/01
X0127	XG.2001.124-1	630-20-6	1,1,1,2 Tetrachloroethane	ND	mg / Kg	1	0.005	01/29
X0127	XG.2001.124-1	79-00-5	1,1,2 Trichloroethane	ND	mg / Kg	1	0.005	01/29/0
X0127	XG.2001.124-1	79-34-5	1,1,2,2 Tetrachloroethane	ND	mg / Kg	1	0.005	01/29/01
X0127	XG.2001.124-1	106-93-4	1,2 Dibromoethane (EDB)	ND	mg / Kg	1	0.005	01/29/01
X0127	XG.2001.124-1	95-50-1	1,2 Dichlorobenzene	ND	mg / Kg	1	0.005	01/29/01
X0127	XG.2001.124-1	107-06-2	1,2 Dichloroethane	ND	mg / Kg	1	0.005	01/29/01
X0127	XG.2001.124-1	78-87-5	1,2 Dichloropropane	ND	mg / Kg	1	0.005	01/29/01
X0127	XG.2001.124-1	96-18-4	1,2,3 Trichloropropane	ND	mg / Kg	1	0.005	01/29/01
X0127	XG.2001.124-1	95-63-6	1,2,4-Trimethylbenzene	ND	mg / Kg	1	0.005	01/29/01
X0127	XG.2001.124-1	541-73-1	1,3 Dichlorobenzene	ND	mg / Kg	1	0.005	01/29/01
X0127	XG.2001.124-1	108-67-8	1,3,5-Trimethylbenzene	ND	mg / Kg	1	0.005	01/29/01
X0127	XG.2001.124-1	764-41-0	1,4 Dichloro-2-butene	ND	mg / Kg	1	0.05	01/29/01
X0127	XG.2001.124-1	106-46-7	1,4 Dichlorobenzene	ND	mg / Kg	1	0.005	01/29/01
X0127	XG.2001.124-1	78-93-3	2-Butanone (MEK)	ND	mg / Kg	1	0.025	01/29/01
X0127	XG.2001.124-1	110-75-8	2-Chloroethylvinylether	ND	mg / Kg	1	0.025	01/29/0
X0127	XG.2001.124-1	591-78-6	2-Hexanone (MBK)	ND	mg / Kg	1	0.025	01/29/0
X0127	XG.2001.124-1	108-10-1	4-Methyl-2-pentanone (MIBK)	ND	mg / Kg	1	0.025	01/29/0
X0127	XG.2001.124-1	67-64-1	Acetone	ND	mg / Kg	1	0.05	01/29/0
X0127	XG.2001.124-1	107-02-8	Acrolein	ND	mg / Kg	1	0.1	01/29/0
X0127	XG.2001.124-1	107-13-1	Acrylonitrile	ND	mg / Kg	1	0.1	01/29/0
X0127	XG.2001.124-1	71-43-2	Benzene	ND	mg / Kg	1	0.005	01/29/0
X0127	XG.2001.124-1	75-27-4	Bromodichloromethane	ND	mg / Kg	1	0.005	01/29/0
X0127	XG.2001.124-1	75-25-2	Bromoform	ND	mg / Kg	1	0.005	01/29/0
X0127	XG.2001.124-1	74-83-9	Bromomethane	ND	mg / Kg	1	0.025	01/29/0
X0127	XG.2001.124-1	75-15-0	Carbon disulfide	ND	mg / Kg	1	0.025	01/29/0
X0127	XG.2001.124-1	56-23-5	Carbon tetrachloride	ND	mg / Kg	1	0.005	01/29/0
X0127	XG.2001.124-1	108-90-7	Chlorobenzene	ND	mg / Kg	1	0.005	01/29

Quality Control Summary

Explanation of codes

D *Not applicable due to sample dilution*
L *Not applicable due to MDL proximity*

Client: **CH2MHILL**
Project: **0101252** **160660.02.FF.SA**

X0127	XG.2001.124-1	124-48-1	Chlorodibromomethane	ND	mg / Kg	1	0.005		01/29/01
X0127	XG.2001.124-1	75-00-3	Chloroethane	ND	mg / Kg	1	0.025		01/29/01
X0127	XG.2001.124-1	67-66-3	Chloroform	ND	mg / Kg	1	0.005		01/29/01
X0127	XG.2001.124-1	74-87-3	Chloromethane	ND	mg / Kg	1	0.025		01/29/01
X0127	XG.2001.124-1	156-59-2	cis-1,2 dichloroethene	ND	mg / Kg	1	0.005		01/29/01
X0127	XG.2001.124-1	10061-01-5	cis-1,3 dichloropropene	ND	mg / Kg	1	0.005		01/29/01
X0127	XG.2001.124-1	74-95-3	Dibromomethane	ND	mg / Kg	1	0.005		01/29/01
X0127	XG.2001.124-1	97-63-2	Ethyl methacrylate	ND	mg / Kg	1	0.025		01/29/01
X0127	XG.2001.124-1	100-41-4	Ethylbenzene	ND	mg / Kg	1	0.005		01/29/01
X0127	XG.2001.124-1		Freon 113	ND	mg / Kg	1	0.025		01/29/01
X0127	XG.2001.124-1	75-71-8	Freon 12	ND	mg / Kg	1	0.05		01/29/01
X0127	XG.2001.124-1	74-88-4	Iodomethane	ND	mg / Kg	1	0.025		01/29/01
X0127	XG.2001.124-1	1634-04-4	Methyl t-butyl ether (MTBE)	ND	mg / Kg	1	0.005		01/29/01
X0127	XG.2001.124-1	75-09-2	Methylene chloride	ND	mg / Kg	1	0.05		01/29/01
X0127	XG.2001.124-1	91-20-3	Naphthalene	ND	mg / Kg	1	0.025		01/29/01
X0127	XG.2001.124-1	95-47-6	o-Xylene	ND	mg / Kg	1	0.005		01/29/01
X0127	XG.2001.124-1	108-38-3/106-42	p/m Xylenes	ND	mg / Kg	1	0.01		01/29/01
X0127	XG.2001.124-1	100-42-5	Styrene	ND	mg / Kg	1	0.005		01/29/01
X0127	XG.2001.124-1	156-60-5	t-1,2 Dichloroethene	ND	mg / Kg	1	0.005		01/29/01
X0127	XG.2001.124-1	10061-02-6	t-1,3 Dichloropropene	ND	mg / Kg	1	0.005		01/29/01
X0127	XG.2001.124-1	127-18-4	Tetrachloroethene	ND	mg / Kg	1	0.005		01/29/01
X0127	XG.2001.124-1	108-88-3	Toluene	ND	mg / Kg	1	0.005		01/29/01
X0127	XG.2001.124-1	79-01-6	Trichloroethene	ND	mg / Kg	1	0.005		01/29/01
X0127	XG.2001.124-1	75-69-4	Trichlorofluoromethane	ND	mg / Kg	1	0.025		01/29/01
X0127	XG.2001.124-1	108-05-4	Vinyl acetate	ND	mg / Kg	1	0.025		01/29/01
X0127	XG.2001.124-1	75-01-4	Vinyl chloride	ND	mg / Kg	1	0.025		01/29/01
X0127-021		**SW846 8260A Purgeable VOCs by GC/MS**							
X0127	XG.2001.132-1	75-34-3	1,1 Dichloroethane	ND	mg / Kg	1	0.005		01/30/01
X0127	XG.2001.132-1	75-34-3	1,1 Dichloroethene	ND	mg / Kg	1	0.005		01/30/01
X0127	XG.2001.132-1	71-55-6	1,1,1 Trichloroethane	ND	mg / Kg	1	0.005		01/30/01
X0127	XG.2001.132-1	630-20-6	1,1,1,2 Tetrachloroethane	ND	mg / Kg	1	0.005		01/30/01
X0127	XG.2001.132-1	79-00-5	1,1,2 Trichloroethane	ND	mg / Kg	1	0.005		01/30/01
X0127	XG.2001.132-1	79-34-5	1,1,2,2 Tetrachloroethane	ND	mg / Kg	1	0.005		01/30/01
X0127	XG.2001.132-1	106-93-4	1,2 Dibromoethane (EDB)	ND	mg / Kg	1	0.005		01/30/01
X0127	XG.2001.132-1	95-50-1	1,2 Dichlorobenzene	ND	mg / Kg	1	0.005		01/30/01
X0127	XG.2001.132-1	107-06-2	1,2 Dichloroethane	ND	mg / Kg	1	0.005		01/30/01
X0127	XG.2001.132-1	78-87-5	1,2 Dichloropropane	ND	mg / Kg	1	0.005		01/30/01
X0127	XG.2001.132-1	96-18-4	1,2,3 Trichloropropane	ND	mg / Kg	1	0.005		01/30/01
X0127	XG.2001.132-1	95-63-6	1,2,4-Trimethylbenzene	ND	mg / Kg	1	0.005		01/30/01
X0127	XG.2001.132-1	541-73-1	1,3 Dichlorobenzene	ND	mg / Kg	1	0.005		01/30/01
X0127	XG.2001.132-1	108-67-8	1,3,5-Trimethylbenzene	ND	mg / Kg	1	0.005		01/30/01
X0127	XG.2001.132-1	764-41-0	1,4 Dichloro-2-butene	ND	mg / Kg	1	0.05		01/30/01
X0127	XG.2001.132-1	106-46-7	1,4 Dichlorobenzene	ND	mg / Kg	1	0.005		01/30/01
X0127	XG.2001.132-1	78-93-3	2-Butanone (MEK)	ND	mg / Kg	1	0.025		01/30/01
X0127	XG.2001.132-1	110-75-8	2-Chloroethylvinylether	ND	mg / Kg	1	0.025		01/30/01
X0127	XG.2001.132-1	591-78-6	2-Hexanone (MBK)	ND	mg / Kg	1	0.025		01/30/01
X0127	XG.2001.132-1	108-10-1	4-Methyl-2-pentanone (MIBK)	ND	mg / Kg	1	0.025		01/30/01
X0127	XG.2001.132-1	67-64-1	Acetone	ND	mg / Kg	1	0.05		01/30/01
X0127	XG.2001.132-1	107-02-8	Acrolein	ND	mg / Kg	1	0.1		01/30/01

Quality Control Summary

Client: **CH2MHILL**

Project: **0101252** **160660.02.FF.SA**

Explanation of codes

D *Not applicable due to sample dilu*

L *Not applicable due to MDL proxim*

X0127	XG.2001.132-1	107-13-1	Acrylonitrile	ND	mg / Kg	1	0.1	01/30/01
X0127	XG.2001.132-1	71-43-2	Benzene	ND	mg / Kg	1	0.005	01/30/01
X0127	XG.2001.132-1	75-27-4	Bromodichloromethane	ND	mg / Kg	1	0.005	01/30/01
X0127	XG.2001.132-1	75-25-2	Bromoform	ND	mg / Kg	1	0.005	01/30/01
X0127	XG.2001.132-1	74-83-9	Bromomethane	ND	mg / Kg	1	0.025	01/30/01
X0127	XG.2001.132-1	75-15-0	Carbon disulfide	ND	mg / Kg	1	0.025	01/30/01
X0127	XG.2001.132-1	56-23-5	Carbon tetrachloride	ND	mg / Kg	1	0.005	01/30/01
X0127	XG.2001.132-1	108-90-7	Chlorobenzene	ND	mg / Kg	1	0.005	01/30/01
X0127	XG.2001.132-1	124-48-1	Chlorodibromomethane	ND	mg / Kg	1	0.005	01/30/01
X0127	XG.2001.132-1	75-00-3	Chloroethane	ND	mg / Kg	1	0.025	01/30/01
X0127	XG.2001.132-1	67-66-3	Chloroform	ND	mg / Kg	1	0.005	01/30/01
X0127	XG.2001.132-1	74-87-3	Chloromethane	ND	mg / Kg	1	0.025	01/30/01
X0127	XG.2001.132-1	156-59-2	cis-1,2 dichloroethene	ND	mg / Kg	1	0.005	01/30/01
X0127	XG.2001.132-1	10061-01-5	cis-1,3 dichloropropene	ND	mg / Kg	1	0.005	01/30/01
X0127	XG.2001.132-1	74-95-3	Dibromomethane	ND	mg / Kg	1	0.005	01/30/01
X0127	XG.2001.132-1	97-63-2	Ethyl methacrylate	ND	mg / Kg	1	0.025	01/30/01
X0127	XG.2001.132-1	100-41-4	Ethylbenzene	ND	mg / Kg	1	0.005	01/30/01
X0127	XG.2001.132-1		Freon 113	ND	mg / Kg	1	0.025	01/30/01
X0127	XG.2001.132-1	75-71-8	Freon 12	ND	mg / Kg	1	0.05	01/30/01
X0127	XG.2001.132-1	74-88-4	Iodomethane	ND	mg / Kg	1	0.025	01/30/01
X0127	XG.2001.132-1	1634-04-4	Methyl t-butyl ether (MTBE)	ND	mg / Kg	1	0.005	01/30/01
X0127	XG.2001.132-1	75-09-2	Methylene chloride	ND	mg / Kg	1	0.05	01/30/01
X0127	XG.2001.132-1	91-20-3	Naphthalene	ND	mg / Kg	1	0.025	01/30/01
X0127	XG.2001.132-1	95-47-6	o-Xylene	ND	mg / Kg	1	0.005	01/3
X0127	XG.2001.132-1	108-38-3/106-42	p/m Xylenes	ND	mg / Kg	1	0.01	01/30/
X0127	XG.2001.132-1	100-42-5	Styrene	ND	mg / Kg	1	0.005	01/30/01
X0127	XG.2001.132-1	156-60-5	t-1,2 Dichloroethene	ND	mg / Kg	1	0.005	01/30/01
X0127	XG.2001.132-1	10061-02-6	t-1,3 Dichloropropene	ND	mg / Kg	1	0.005	01/30/01
X0127	XG.2001.132-1	127-18-4	Tetrachloroethene	ND	mg / Kg	1	0.005	01/30/0
X0127	XG.2001.132-1	108-88-3	Toluene	ND	mg / Kg	1	0.005	01/30/0
X0127	XG.2001.132-1	79-01-6	Trichloroethene	ND	mg / Kg	1	0.005	01/30/0
X0127	XG.2001.132-1	75-69-4	Trichlorofluoromethane	ND	mg / Kg	1	0.025	01/30/0
X0127	XG.2001.132-1	108-05-4	Vinyl acetate	ND	mg / Kg	1	0.025	01/30/0
X0127	XG.2001.132-1	75-01-4	Vinyl chloride	ND	mg / Kg	1	0.025	01/30/0
X0127-024		**SW846 8260A Purgeable VOCs by GC/MS**						
X0127	XG.2001.157-2	75-34-3	1,1 Dichloroethane	ND	mg / Kg	1	0.005	02/01/0
X0127	XG.2001.157-2	75-34-3	1,1 Dichloroethene	ND	mg / Kg	1	0.005	02/01/0
X0127	XG.2001.157-2	71-55-6	1,1,1 Trichloroethane	ND	mg / Kg	1	0.005	02/01/0
X0127	XG.2001.157-2	630-20-6	1,1,1,2 Tetrachloroethane	ND	mg / Kg	1	0.005	02/01/0
X0127	XG.2001.157-2	79-00-5	1,1,2 Trichloroethane	ND	mg / Kg	1	0.005	02/01/0
X0127	XG.2001.157-2	79-34-5	1,1,2,2 Tetrachloroethane	ND	mg / Kg	1	0.005	02/01/0
X0127	XG.2001.157-2	106-93-4	1,2 Dibromoethane (EDB)	ND	mg / Kg	1	0.005	02/01/0
X0127	XG.2001.157-2	95-50-1	1,2 Dichlorobenzene	ND	mg / Kg	1	0.005	02/01/0
X0127	XG.2001.157-2	107-06-2	1,2 Dichloroethane	ND	mg / Kg	1	0.005	02/01/0
X0127	XG.2001.157-2	78-87-5	1,2 Dichloropropane	ND	mg / Kg	1	0.005	02/01/0
X0127	XG.2001.157-2	96-18-4	1,2,3 Trichloropropane	ND	mg / Kg	1	0.005	02/01/0
X0127	XG.2001.157-2	95-63-6	1,2,4-Trimethylbenzene	ND	mg / Kg	1	0.005	02/01/0
X0127	XG.2001.157-2	541-73-1	1,3 Dichlorobenzene	ND	mg / Kg	1	0.005	02/01/0
X0127	XG.2001.157-2	108-67-8	1,3,5-Trimethylbenzene	ND	mg / Kg	1	0.005	02/0

Quality Control Summary

Explanation of codes

D *Not applicable due to sample dilution*
L *Not applicable due to MDL proximity*

Client: **CH2MHILL**
Project: **0101252** **160660.02.FF.SA**

X0127	XG.2001.157-2	764-41-0	1,4 Dichloro-2-butene	ND	mg / Kg	1	0.05	02/01.01
X0127	XG.2001.157-2	106-46-7	1,4 Dichlorobenzene	ND	mg / Kg	1	0.005	02/01.01
X0127	XG.2001.157-2	78-93-3	2-Butanone (MEK)	ND	mg / Kg	1	0.025	02/01.01
X0127	XG.2001.157-2	110-75-8	2-Chloroethylvinylether	ND	mg / Kg	1	0.025	02/01.01
X0127	XG.2001.157-2	591-78-6	2-Hexanone (MBK)	ND	mg / Kg	1	0.025	02/01.01
X0127	XG.2001.157-2	108-10-1	4-Methyl-2-pentanone (MIBK)	ND	mg / Kg	1	0.025	02/01.01
X0127	XG.2001.157-2	67-64-1	Acetone	ND	mg / Kg	1	0.05	02/01.01
X0127	XG.2001.157-2	107-02-8	Acrolein	ND	mg / Kg	1	0.1	02/01.01
X0127	XG.2001.157-2	107-13-1	Acrylonitrile	ND	mg / Kg	1	0.1	02/01.01
X0127	XG.2001.157-2	71-43-2	Benzene	ND	mg / Kg	1	0.005	02/01.01
X0127	XG.2001.157-2	75-27-4	Bromodichloromethane	ND	mg / Kg	1	0.005	02/01.01
X0127	XG.2001.157-2	75-25-2	Bromoform	ND	mg / Kg	1	0.005	02/01.01
X0127	XG.2001.157-2	74-83-9	Bromomethane	ND	mg / Kg	1	0.025	02/01.01
X0127	XG.2001.157-2	75-15-0	Carbon disulfide	ND	mg / Kg	1	0.025	02/01.01
X0127	XG.2001.157-2	56-23-5	Carbon tetrachloride	ND	mg / Kg	1	0.005	02/01.01
X0127	XG.2001.157-2	108-90-7	Chlorobenzene	ND	mg / Kg	1	0.005	02/01.01
X0127	XG.2001.157-2	124-48-1	Chlorodibromomethane	ND	mg / Kg	1	0.005	02/01.01
X0127	XG.2001.157-2	75-00-3	Chloroethane	ND	mg / Kg	1	0.025	02/01.01
X0127	XG.2001.157-2	67-66-3	Chloroform	ND	mg / Kg	1	0.005	02/01.01
X0127	XG.2001.157-2	74-87-3	Chloromethane	ND	mg / Kg	1	0.025	02/01.01
X0127	XG.2001.157-2	156-59-2	cis-1,2 dichloroethene	ND	mg / Kg	1	0.005	02/01.01
X0127	XG.2001.157-2	10061-01-5	cis-1,3 dichloropropene	ND	mg / Kg	1	0.005	02/01.01
X0127	XG.2001.157-2	74-95-3	Dibromomethane	ND	mg / Kg	1	0.005	02/01.01
	XG.2001.157-2	97-63-2	Ethyl methacrylate	ND	mg / Kg	1	0.025	02/01.01
	XG.2001.157-2	100-41-4	Ethylbenzene	ND	mg / Kg	1	0.005	02/01.01
X0127	XG.2001.157-2		Freon 113	ND	mg / Kg	1	0.025	02/01.01
X0127	XG.2001.157-2	75-71-8	Freon 12	ND	mg / Kg	1	0.05	02/01.01
X0127	XG.2001.157-2	74-88-4	Iodomethane	ND	mg / Kg	1	0.025	02/01.01
X0127	XG.2001.157-2	1634-04-4	Methyl t-butyl ether (MTBE)	ND	mg / Kg	1	0.005	02/01.01
X0127	XG.2001.157-2	75-09-2	Methylene chloride	ND	mg / Kg	1	0.05	02/01.01
X0127	XG.2001.157-2	91-20-3	Naphthalene	ND	mg / Kg	1	0.025	02/01.01
X0127	XG.2001.157-2	95-47-6	o-Xylene	ND	mg / Kg	1	0.005	02/01.01
X0127	XG.2001.157-2	108-38-3/106-42	p/m Xylenes	ND	mg / Kg	1	0.01	02/01.01
X0127	XG.2001.157-2	100-42-5	Styrene	ND	mg / Kg	1	0.005	02/01.01
X0127	XG.2001.157-2	156-60-5	t-1,2 Dichloroethene	ND	mg / Kg	1	0.005	02/01.01
X0127	XG.2001.157-2	10061-02-6	t-1,3 Dichloropropene	ND	mg / Kg	1	0.005	02/01.01
X0127	XG.2001.157-2	127-18-4	Tetrachloroethene	ND	mg / Kg	1	0.005	02/01.01
X0127	XG.2001.157-2	108-88-3	Toluene	ND	mg / Kg	1	0.005	02/01.01
X0127	XG.2001.157-2	79-01-6	Trichloroethene	ND	mg / Kg	1	0.005	02/01.01
X0127	XG.2001.157-2	75-69-4	Trichlorofluoromethane	ND	mg / Kg	1	0.025	02/01.01
X0127	XG.2001.157-2	108-05-4	Vinyl acetate	ND	mg / Kg	1	0.025	02/01.01
X0127	XG.2001.157-2	75-01-4	Vinyl chloride	ND	mg / Kg	1	0.025	02/01.01
X0127-028		**SW846 8260A Purgeable VOCs by GC/MS**						
X0127	XG.2001.157-5	75-34-3	1,1 Dichloroethane	ND	mg / Kg	1	0.005	02/02.01
X0127	XG.2001.157-5	75-34-3	1,1 Dichloroethene	ND	mg / Kg	1	0.005	02/02.01
X0127	XG.2001.157-5	71-55-6	1,1,1 Trichloroethane	ND	mg / Kg	1	0.005	02/02.01
X0127	XG.2001.157-5	630-20-6	1,1,1,2 Tetrachloroethane	ND	mg / Kg	1	0.005	02/02.01
X0127	XG.2001.157-5	79-00-5	1,1,2 Trichloroethane	ND	mg / Kg	1	0.005	02/02.01
	XG.2001.157-5	79-34-5	1,1,2,2 Tetrachloroethane	ND	mg / Kg	1	0.005	02/02.01

Quality Control Summary

Client: **CH2MHILL**

Project: **0101252** **160660.02.FF.SA**

Explanation of codes

D	*Not applicable due to sample diluti*
L	*Not applicable due to MDL proximity*

X0127	XG.2001.157-5	106-93-4	1,2 Dibromoethane (EDB)	ND	mg / Kg	1	0.005	02/02/0
X0127	XG.2001.157-5	95-50-1	1,2 Dichlorobenzene	ND	mg / Kg	1	0.005	02/02/0
X0127	XG.2001.157-5	107-06-2	1,2 Dichloroethane	ND	mg / Kg	1	0.005	02/02/0
X0127	XG.2001.157-5	78-87-5	1,2 Dichloropropane	ND	mg / Kg	1	0.005	02/02/0
X0127	XG.2001.157-5	96-18-4	1,2,3 Trichloropropane	ND	mg / Kg	1	0.005	02/02/01
X0127	XG.2001.157-5	95-63-6	1,2,4-Trimethylbenzene	ND	mg / Kg	1	0.005	02/02/01
X0127	XG.2001.157-5	541-73-1	1,3 Dichlorobenzene	ND	mg / Kg	1	0.005	02/02/01
X0127	XG.2001.157-5	108-67-8	1,3,5-Trimethylbenzene	ND	mg / Kg	1	0.005	02/02/01
X0127	XG.2001.157-5	764-41-0	1,4 Dichloro-2-butene	ND	mg / Kg	1	0.05	02/02/01
X0127	XG.2001.157-5	106-46-7	1,4 Dichlorobenzene	ND	mg / Kg	1	0.005	02/02/01
X0127	XG.2001.157-5	78-93-3	2-Butanone (MEK)	ND	mg / Kg	1	0.025	02/02/01
X0127	XG.2001.157-5	110-75-8	2-Chloroethylvinylether	ND	mg / Kg	1	0.025	02/02/01
X0127	XG.2001.157-5	591-78-6	2-Hexanone (MBK)	ND	mg / Kg	1	0.025	02/02/01
X0127	XG.2001.157-5	108-10-1	4-Methyl-2-pentanone (MIBK)	ND	mg / Kg	1	0.025	02/02/01
X0127	XG.2001.157-5	67-64-1	Acetone	ND	mg / Kg	1	0.05	02/02/01
X0127	XG.2001.157-5	107-02-8	Acrolein	ND	mg / Kg	1	0.1	02/02/01
X0127	XG.2001.157-5	107-13-1	Acrylonitrile	ND	mg / Kg	1	0.1	02/02/01
X0127	XG.2001.157-5	71-43-2	Benzene	ND	mg / Kg	1	0.005	02/02/01
X0127	XG.2001.157-5	75-27-4	Bromodichloromethane	ND	mg / Kg	1	0.005	02/02/01
X0127	XG.2001.157-5	75-25-2	Bromoform	ND	mg / Kg	1	0.005	02/02/01
X0127	XG.2001.157-5	74-83-9	Bromomethane	ND	mg / Kg	1	0.025	02/02/01
X0127	XG.2001.157-5	75-15-0	Carbon disulfide	ND	mg / Kg	1	0.025	02/02/01
X0127	XG.2001.157-5	56-23-5	Carbon tetrachloride	ND	mg / Kg	1	0.005	02/02/01
X0127	XG.2001.157-5	108-90-7	Chlorobenzene	ND	mg / Kg	1	0.005	02/02/
X0127	XG.2001.157-5	124-48-1	Chlorodibromomethane	ND	mg / Kg	1	0.005	02/02/0
X0127	XG.2001.157-5	75-00-3	Chloroethane	ND	mg / Kg	1	0.025	02/02/01
X0127	XG.2001.157-5	67-66-3	Chloroform	ND	mg / Kg	1	0.005	02/02/01
X0127	XG.2001.157-5	74-87-3	Chloromethane	ND	mg / Kg	1	0.025	02/02/01
X0127	XG.2001.157-5	156-59-2	cis-1,2 dichloroethene	ND	mg / Kg	1	0.005	02/02/01
X0127	XG.2001.157-5	10061-01-5	cis-1,3 dichloropropene	ND	mg / Kg	1	0.005	02/02/01
X0127	XG.2001.157-5	74-95-3	Dibromomethane	ND	mg / Kg	1	0.005	02/02/01
X0127	XG.2001.157-5	97-63-2	Ethyl methacrylate	ND	mg / Kg	1	0.025	02/02/01
X0127	XG.2001.157-5	100-41-4	Ethylbenzene	ND	mg / Kg	1	0.005	02/02/01
X0127	XG.2001.157-5		Freon 113	ND	mg / Kg	1	0.025	02/02/01
X0127	XG.2001.157-5	75-71-8	Freon 12	ND	mg / Kg	1	0.05	02/02/01
X0127	XG.2001.157-5	74-88-4	Iodomethane	ND	mg / Kg	1	0.025	02/02/01
X0127	XG.2001.157-5	1634-04-4	Methyl t-butyl ether (MTBE)	ND	mg / Kg	1	0.005	02/02/01
X0127	XG.2001.157-5	75-09-2	Methylene chloride	ND	mg / Kg	1	0.05	02/02/01
X0127	XG.2001.157-5	91-20-3	Naphthalene	ND	mg / Kg	1	0.025	02/02/01
X0127	XG.2001.157-5	95-47-6	o-Xylene	ND	mg / Kg	1	0.005	02/02/01
X0127	XG.2001.157-5	108-38-3/106-42	p/m Xylenes	ND	mg / Kg	1	0.01	02/02/01
X0127	XG.2001.157-5	100-42-5	Styrene	ND	mg / Kg	1	0.005	02/02/01
X0127	XG.2001.157-5	156-60-5	t-1,2 Dichloroethene	ND	mg / Kg	1	0.005	02/02/01
X0127	XG.2001.157-5	10061-02-6	t-1,3 Dichloropropene	ND	mg / Kg	1	0.005	02/02/01
X0127	XG.2001.157-5	127-18-4	Tetrachloroethene	ND	mg / Kg	1	0.005	02/02/01
X0127	XG.2001.157-5	108-88-3	Toluene	ND	mg / Kg	1	0.005	02/02/01
X0127	XG.2001.157-5	79-01-6	Trichloroethene	ND	mg / Kg	1	0.005	02/02/01
X0127	XG.2001.157-5	75-69-4	Trichlorofluoromethane	ND	mg / Kg	1	0.025	02/02/01
X0127	XG.2001.157-5	108-05-4	Vinyl acetate	ND	mg / Kg	1	0.025	02/02/
X0127	XG.2001.157-5	75-01-4	Vinyl chloride	ND	mg / Kg	1	0.025	02/02/0

Quality Control Summary

Explanation of codes

D *Not applicable due to sample dilution*
L *Not applicable due to MDL proximity*

Client: **CH2MHILL**
Project: **0101252** **160660.02.FF.SA**

X0127-030 **SW846 8260A Purgeable VOCs by GC/MS**

X0127	XG.2001.198-1	75-34-3	1,1 Dichloroethane	ND	mg / Kg	1	0.005	02/09/01
X0127	XG.2001.198-1	75-34-3	1,1 Dichloroethene	ND	mg / Kg	1	0.005	02/09/01
X0127	XG.2001.198-1	71-55-6	1,1,1 Trichloroethane	ND	mg / Kg	1	0.005	02/09/01
X0127	XG.2001.198-1	630-20-6	1,1,1,2 Tetrachloroethane	ND	mg / Kg	1	0.005	02/09/01
X0127	XG.2001.198-1	79-00-5	1,1,2 Trichloroethane	ND	mg / Kg	1	0.005	02/09/01
X0127	XG.2001.198-1	79-34-5	1,1,2,2 Tetrachloroethane	ND	mg / Kg	1	0.005	02/09/01
X0127	XG.2001.198-1	106-93-4	1,2 Dibromoethane (EDB)	ND	mg / Kg	1	0.005	02/09/01
X0127	XG.2001.198-1	95-50-1	1,2 Dichlorobenzene	ND	mg / Kg	1	0.005	02/09/01
X0127	XG.2001.198-1	107-06-2	1,2 Dichloroethane	ND	mg / Kg	1	0.005	02/09/01
X0127	XG.2001.198-1	78-87-5	1,2 Dichloropropane	ND	mg / Kg	1	0.005	02/09/01
X0127	XG.2001.198-1	96-18-4	1,2,3 Trichloropropane	ND	mg / Kg	1	0.005	02/09/01
X0127	XG.2001.198-1	95-63-6	1,2,4-Trimethylbenzene	ND	mg / Kg	1	0.005	02/09/01
X0127	XG.2001.198-1	541-73-1	1,3 Dichlorobenzene	ND	mg / Kg	1	0.005	02/09/01
X0127	XG.2001.198-1	108-67-8	1,3,5-Trimethylbenzene	ND	mg / Kg	1	0.005	02/09/01
X0127	XG.2001.198-1	764-41-0	1,4 Dichloro-2-butene	ND	mg / Kg	1	0.05	02/09/01
X0127	XG.2001.198-1	106-46-7	1,4 Dichlorobenzene	ND	mg / Kg	1	0.005	02/09/01
X0127	XG.2001.198-1	78-93-3	2-Butanone (MEK)	ND	mg / Kg	1	0.025	02/09/01
X0127	XG.2001.198-1	110-75-8	2-Chloroethylvinylether	ND	mg / Kg	1	0.025	02/09/01
X0127	XG.2001.198-1	591-78-6	2-Hexanone (MBK)	ND	mg / Kg	1	0.025	02/09/01
X0127	XG.2001.198-1	108-10-1	4-Methyl-2-pentanone (MIBK)	ND	mg / Kg	1	0.025	02/09/01
X0127	XG.2001.198-1	67-64-1	Acetone	ND	mg / Kg	1	0.05	02/09/01
[illegible]	XG.2001.198-1	107-02-8	Acrolein	ND	mg / Kg	1	0.1	02/09/01
[illegible]	XG.2001.198-1	107-13-1	Acrylonitrile	ND	mg / Kg	1	0.1	02/09/01
X0127	XG.2001.198-1	71-43-2	Benzene	ND	mg / Kg	1	0.005	02/09/01
X0127	XG.2001.198-1	75-27-4	Bromodichloromethane	ND	mg / Kg	1	0.005	02/09/01
X0127	XG.2001.198-1	75-25-2	Bromoform	ND	mg / Kg	1	0.005	02/09/01
X0127	XG.2001.198-1	74-83-9	Bromomethane	ND	mg / Kg	1	0.025	02/09/01
X0127	XG.2001.198-1	75-15-0	Carbon disulfide	ND	mg / Kg	1	0.025	02/09/01
X0127	XG.2001.198-1	56-23-5	Carbon tetrachloride	ND	mg / Kg	1	0.005	02/09/01
X0127	XG.2001.198-1	108-90-7	Chlorobenzene	ND	mg / Kg	1	0.005	02/09/01
X0127	XG.2001.198-1	124-48-1	Chlorodibromomethane	ND	mg / Kg	1	0.005	02/09/01
X0127	XG.2001.198-1	75-00-3	Chloroethane	ND	mg / Kg	1	0.025	02/09/01
X0127	XG.2001.198-1	67-66-3	Chloroform	ND	mg / Kg	1	0.005	02/09/01
X0127	XG.2001.198-1	74-87-3	Chloromethane	ND	mg / Kg	1	0.025	02/09/01
X0127	XG.2001.198-1	156-59-2	cis-1,2 dichloroethene	ND	mg / Kg	1	0.005	02/09/01
X0127	XG.2001.198-1	10061-01-5	cis-1,3 dichloropropene	ND	mg / Kg	1	0.005	02/09/01
X0127	XG.2001.198-1	74-95-3	Dibromomethane	ND	mg / Kg	1	0.005	02/09/01
X0127	XG.2001.198-1	97-63-2	Ethyl methacrylate	ND	mg / Kg	1	0.025	02/09/01
X0127	XG.2001.198-1	100-41-4	Ethylbenzene	ND	mg / Kg	1	0.005	02/09/01
X0127	XG.2001.198-1		Freon 113	ND	mg / Kg	1	0.025	02/09/01
X0127	XG.2001.198-1	75-71-8	Freon 12	ND	mg / Kg	1	0.05	02/09/01
X0127	XG.2001.198-1	74-88-4	Iodomethane	ND	mg / Kg	1	0.025	02/09/01
X0127	XG.2001.198-1	1634-04-4	Methyl t-butyl ether (MTBE)	ND	mg / Kg	1	0.005	02/09/01
X0127	XG.2001.198-1	75-09-2	Methylene chloride	ND	mg / Kg	1	0.05	02/09/01
X0127	XG.2001.198-1	91-20-3	Naphthalene	ND	mg / Kg	1	0.025	02/09/01
X0127	XG.2001.198-1	95-47-6	o-Xylene	ND	mg / Kg	1	0.005	02/09/01
X0127	XG.2001.198-1	108-38-3/106-42	p/m Xylenes	ND	mg / Kg	1	0.01	02/09/01
[illegible]	XG.2001.198-1	100-42-5	Styrene	ND	mg / Kg	1	0.005	02/09/01

Quality Control Summary

Client: **CH2MHILL**

Project: **0101252** **160660.02.FF.SA**

Explanation of codes

D *Not applicable due to sample dilut*

L *Not applicable due to MDL proximity*

X0127	XG.2001.198-1	156-60-5	t-1,2 Dichloroethene	ND	mg / Kg	1	0.005	02/09/0
X0127	XG.2001.198-1	10061-02-6	t-1,3 Dichloropropene	ND	mg / Kg	1	0.005	02/09/0
X0127	XG.2001.198-1	127-18-4	Tetrachloroethene	ND	mg / Kg	1	0.005	02/09/0
X0127	XG.2001.198-1	108-88-3	Toluene	ND	mg / Kg	1	0.005	02/09/0
X0127	XG.2001.198-1	79-01-6	Trichloroethene	ND	mg / Kg	1	0.005	02/09/0
X0127	XG.2001.198-1	75-69-4	Trichlorofluoromethane	ND	mg / Kg	1	0.025	02/09/0
X0127	XG.2001.198-1	108-05-4	Vinyl acetate	ND	mg / Kg	1	0.025	02/09/0
X0127	XG.2001.198-1	75-01-4	Vinyl chloride	ND	mg / Kg	1	0.025	02/09/0
X0127-039		**SW846 8260A Purgeable VOCs by GC/MS**						
X0127	XG.2001.198-9	75-34-3	1,1 Dichloroethane	ND	mg / Kg	1	0.005	02/13/01
X0127	XG.2001.198-9	75-34-3	1,1 Dichloroethene	ND	mg / Kg	1	0.005	02/13/01
X0127	XG.2001.198-9	71-55-6	1,1,1 Trichloroethane	ND	mg / Kg	1	0.005	02/13/01
X0127	XG.2001.198-9	630-20-6	1,1,1,2 Tetrachloroethane	ND	mg / Kg	1	0.005	02/13/01
X0127	XG.2001.198-9	79-00-5	1,1,2 Trichloroethane	ND	mg / Kg	1	0.005	02/13/01
X0127	XG.2001.198-9	79-34-5	1,1,2,2 Tetrachloroethane	ND	mg / Kg	1	0.005	02/13/01
X0127	XG.2001.198-9	106-93-4	1,2 Dibromoethane (EDB)	ND	mg / Kg	1	0.005	02/13/01
X0127	XG.2001.198-9	95-50-1	1,2 Dichlorobenzene	ND	mg / Kg	1	0.005	02/13/01
X0127	XG.2001.198-9	107-06-2	1,2 Dichloroethane	ND	mg / Kg	1	0.005	02/13/01
X0127	XG.2001.198-9	78-87-5	1,2 Dichloropropane	ND	mg / Kg	1	0.005	02/13/01
X0127	XG.2001.198-9	96-18-4	1,2,3 Trichloropropane	ND	mg / Kg	1	0.005	02/13/01
X0127	XG.2001.198-9	95-63-6	1,2,4-Trimethylbenzene	ND	mg / Kg	1	0.005	02/13/01
X0127	XG.2001.198-9	541-73-1	1,3 Dichlorobenzene	ND	mg / Kg	1	0.005	02/13/01
X0127	XG.2001.198-9	108-67-8	1,3,5-Trimethylbenzene	ND	mg / Kg	1	0.005	02/13/
X0127	XG.2001.198-9	764-41-0	1,4 Dichloro-2-butene	ND	mg / Kg	1	0.05	02/13/
X0127	XG.2001.198-9	106-46-7	1,4 Dichlorobenzene	ND	mg / Kg	1	0.005	02/13/01
X0127	XG.2001.198-9	78-93-3	2-Butanone (MEK)	ND	mg / Kg	1	0.025	02/13/01
X0127	XG.2001.198-9	110-75-8	2-Chloroethylvinylether	ND	mg / Kg	1	0.025	02/13/01
X0127	XG.2001.198-9	591-78-6	2-Hexanone (MBK)	ND	mg / Kg	1	0.025	02/13/01
X0127	XG.2001.198-9	108-10-1	4-Methyl-2-pentanone (MIBK)	ND	mg / Kg	1	0.025	02/13/01
X0127	XG.2001.198-9	67-64-1	Acetone	ND	mg / Kg	1	0.05	02/13/01
X0127	XG.2001.198-9	107-02-8	Acrolein	ND	mg / Kg	1	0.1	02/13/01
X0127	XG.2001.198-9	107-13-1	Acrylonitrile	ND	mg / Kg	1	0.1	02/13/01
X0127	XG.2001.198-9	71-43-2	Benzene	ND	mg / Kg	1	0.005	02/13/01
X0127	XG.2001.198-9	75-27-4	Bromodichloromethane	ND	mg / Kg	1	0.005	02/13/01
X0127	XG.2001.198-9	75-25-2	Bromoform	ND	mg / Kg	1	0.005	02/13/01
X0127	XG.2001.198-9	74-83-9	Bromomethane	ND	mg / Kg	1	0.025	02/13/01
X0127	XG.2001.198-9	75-15-0	Carbon disulfide	ND	mg / Kg	1	0.025	02/13/01
X0127	XG.2001.198-9	56-23-5	Carbon tetrachloride	ND	mg / Kg	1	0.005	02/13/01
X0127	XG.2001.198-9	108-90-7	Chlorobenzene	ND	mg / Kg	1	0.005	02/13/01
X0127	XG.2001.198-9	124-48-1	Chlorodibromomethane	ND	mg / Kg	1	0.005	02/13/01
X0127	XG.2001.198-9	75-00-3	Chloroethane	ND	mg / Kg	1	0.025	02/13/01
X0127	XG.2001.198-9	67-66-3	Chloroform	ND	mg / Kg	1	0.005	02/13/01
X0127	XG.2001.198-9	74-87-3	Chloromethane	ND	mg / Kg	1	0.025	02/13/01
X0127	XG.2001.198-9	156-59-2	cis-1,2 dichloroethene	ND	mg / Kg	1	0.005	02/13/01
X0127	XG.2001.198-9	10061-01-5	cis-1,3 dichloropropene	ND	mg / Kg	1	0.005	02/13/01
X0127	XG.2001.198-9	74-95-3	Dibromomethane	ND	mg / Kg	1	0.005	02/13/01
X0127	XG.2001.198-9	97-63-2	Ethyl methacrylate	ND	mg / Kg	1	0.025	02/13/01
X0127	XG.2001.198-9	100-41-4	Ethylbenzene	ND	mg / Kg	1	0.005	02/13/01
X0127	XG.2001.198-9		Freon 113	ND	mg / Kg	1	0.025	02/13
X0127	XG.2001.198-9	75-71-8	Freon 12	ND	mg / Kg	1	0.05	02/13/0

RECEIVED MAR 1 2 2001

Quality Control Summary

Client: CH2MHILL

Project: 0101252 160660.02.FF.SA

Explanation of codes

D *Not applicable due to sample dilution*

L *Not applicable due to MDL proximity*

X0127	XG.2001.198-9	74-88-4	Iodomethane	ND	mg / Kg	1	0.025	02/13/01
X0127	XG.2001.198-9	1634-04-4	Methyl t-butyl ether (MTBE)	ND	mg / Kg	1	0.005	02/13/01
X0127	XG.2001.198-9	75-09-2	Methylene chloride	ND	mg / Kg	1	0.05	02/13/01
X0127	XG.2001.198-9	91-20-3	Naphthalene	ND	mg / Kg	1	0.025	02/13/01
X0127	XG.2001.198-9	95-47-6	o-Xylene	ND	mg / Kg	1	0.005	02/13/01
X0127	XG.2001.198-9	108-38-3/106-42	p/m Xylenes	ND	mg / Kg	1	0.01	02/13/01
X0127	XG.2001.198-9	100-42-5	Styrene	ND	mg / Kg	1	0.005	02/13/01
X0127	XG.2001.198-9	156-60-5	t-1,2 Dichloroethene	ND	mg / Kg	1	0.005	02/13/01
X0127	XG.2001.198-9	10061-02-6	t-1,3 Dichloropropene	ND	mg / Kg	1	0.005	02/13/01
X0127	XG.2001.198-9	127-18-4	Tetrachloroethene	ND	mg / Kg	1	0.005	02/13/01
X0127	XG.2001.198-9	108-88-3	Toluene	ND	mg / Kg	1	0.005	02/13/01
X0127	XG.2001.198-9	79-01-6	Trichloroethene	ND	mg / Kg	1	0.005	02/13/01
X0127	XG.2001.198-9	75-69-4	Trichlorofluoromethane	ND	mg / Kg	1	0.025	02/13/01
X0127	XG.2001.198-9	108-05-4	Vinyl acetate	ND	mg / Kg	1	0.025	02/13/01
X0127	XG.2001.198-9	75-01-4	Vinyl chloride	ND	mg / Kg	1	0.025	02/13/01
X0128-001		**SW846 3550A/8270B SVOCs by GC/MS**						
X0128	XG.2001.83-1	120-82-1	1,2,4-Trichlorobenzene	ND	mg / Kg	1	0.03	01/21/01
X0128	XG.2001.83-1	95-50-1	1,2-Dichlorobenzene	ND	mg / Kg	1	0.03	01/21/01
X0128	XG.2001.83-1	541-73-1	1,3-Dichlorobenzene	ND	mg / Kg	1	0.03	01/21/01
X0128	XG.2001.83-1	106-46-7	1,4-Dichlorobenzene	ND	mg / Kg	1	0.03	01/21/01
X0128	XG.2001.83-1	90-12-0	1-Methylnaphthalene	ND	mg / Kg	1	0.03	01/21/01
X0128	XG.2001.83-1	58-90-2	2,3,4,6-Tetrachlorophenol	ND	mg / Kg	1	1.5	01/21/01
	XG.2001.83-1	95-95-4	2,4,5-Trichlorophenol	ND	mg / Kg	1	0.3	01/21/01
X0128	XG.2001.83-1	88-06-2	2,4,6-Trichlorophenol	ND	mg / Kg	1	0.3	01/21/01
X0128	XG.2001.83-1	120-83-2	2,4-Dichlorophenol	ND	mg / Kg	1	0.3	01/21/01
X0128	XG.2001.83-1	105-67-9	2,4-Dimethylphenol	ND	mg / Kg	1	0.03	01/21/01
X0128	XG.2001.83-1	51-28-5	2,4-Dinitrophenol	ND	mg / Kg	1	0.67	01/21/01
X0128	XG.2001.83-1	121-14-2	2,4-Dinitrotoluene	ND	mg / Kg	1	0.3	01/21/01
X0128	XG.2001.83-1	606-20-2	2,6-Dinitrotoluene	ND	mg / Kg	1	0.3	01/21/01
X0128	XG.2001.83-1	91-58-7	2-Chloronaphthalene	ND	mg / Kg	1	0.03	01/21/01
X0128	XG.2001.83-1	95-57-8	2-Chlorophenol	ND	mg / Kg	1	0.03	01/21/01
X0128	XG.2001.83-1	91-57-6	2-Methylnaphthalene	ND	mg / Kg	1	0.03	01/21/01
X0128	XG.2001.83-1	95-48-7	2-Methylphenol	ND	mg / Kg	1	0.03	01/21/01
X0128	XG.2001.83-1	88-74-4	2-Nitroaniline	ND	mg / Kg	1	0.3	01/21/01
X0128	XG.2001.83-1	88-75-5	2-Nitrophenol	ND	mg / Kg	1	0.3	01/21/01
X0128	XG.2001.83-1		3+4 Methylphenol	ND	mg / Kg	1	0.03	01/21/01
X0128	XG.2001.83-1	91-94-1	3,3-Dichlorobenzidine	ND	mg / Kg	1	0.3	01/21/01
X0128	XG.2001.83-1	99-09-2	3-Nitroaniline	ND	mg / Kg	1	0.3	01/21/01
X0128	XG.2001.83-1	534-52-1	4,6-Dinitro-2-methylphenol	ND	mg / Kg	1	0.3	01/21/01
X0128	XG.2001.83-1	101-55-3	4-Bromophenyl-phenylether	ND	mg / Kg	1	0.03	01/21/01
X0128	XG.2001.83-1	59-50-7	4-Chloro-3-methylphenol	ND	mg / Kg	1	0.3	01/21/01
X0128	XG.2001.83-1	106-47-8	4-Chloroaniline	ND	mg / Kg	1	0.3	01/21/01
X0128	XG.2001.83-1	7005-72-3	4-Chlorophenyl-phenylether	ND	mg / Kg	1	0.03	01/21/01
X0128	XG.2001.83-1	100-01-6	4-Nitroaniline	ND	mg / Kg	1	0.3	01/21/01
X0128	XG.2001.83-1	100-02-7	4-Nitrophenol	ND	mg / Kg	1	0.6	01/21/01
X0128	XG.2001.83-1	83-32-9	Acenaphthene	ND	mg / Kg	1	0.03	01/21/01
X0128	XG.2001.83-1	208-96-8	Acenaphthylene	ND	mg / Kg	1	0.03	01/21/01
[illegible]	XG.2001.83-1	62-53-3	Aniline	ND	mg / Kg	1	0.3	01/21/01
[illegible]	XG.2001.83-1	120-12-7	Anthracene	ND	mg / Kg	1	0.03	01/21/01

Quality Control Summary

Client: **CH2MHILL**

Project: **0101252** **160660.02.FF.SA**

Explanation of codes

D *Not applicable due to sample dilu*

L *Not applicable due to MDL proximity*

X0128	XG.2001.83-1		Azobenzene&1,2-Diphenylhydrazine	ND	mg / Kg	1	0.03	01/21/01
X0128	XG.2001.83-1	56-55-3	Benzo (a) anthracene	ND	mg / Kg	1	0.03	01/21/01
X0128	XG.2001.83-1	50-32-8	Benzo(a)pyrene	ND	mg / Kg	1	0.03	01/21/01
X0128	XG.2001.83-1		Benzo(b & k)fluoranthene	ND	mg / Kg	1	0.03	01/21/01
X0128	XG.2001.83-1	191-24-2	Benzo(g,h,i)perylene	ND	mg / Kg	1	0.3	01/21/01
X0128	XG.2001.83-1	64-85-0	Benzoic acid	ND	mg / Kg	1	3	01/21/01
X0128	XG.2001.83-1	100-51-6	Benzyl alcohol	ND	mg / Kg	1	1.5	01/21/01
X0128	XG.2001.83-1	111-44-4	bis (2-Chloroethyl) ether	ND	mg / Kg	1	0.03	01/21/01
X0128	XG.2001.83-1	111-91-1	bis(2-Chloroethoxy)methane	ND	mg / Kg	1	0.03	01/21/01
X0128	XG.2001.83-1	108-60-1	bis(2-Chloroisopropyl)ether	ND	mg / Kg	1	0.03	01/21/01
X0128	XG.2001.83-1	117-81-7	bis(2-Ethylhexyl)phthalate	ND	mg / Kg	1	0.3	01/21/01
X0128	XG.2001.83-1	85-68-7	Butylbenzylphthalate	ND	mg / Kg	1	0.03	01/21/01
X0128	XG.2001.83-1	218-01-9	Chrysene	ND	mg / Kg	1	0.03	01/21/01
X0128	XG.2001.83-1	84-74-2	di-n-Butylphthalate	ND	mg / Kg	1	0.3	01/21/01
X0128	XG.2001.83-1	117-84-0	di-n-Octylpthalate	ND	mg / Kg	1	0.3	01/21/01
X0128	XG.2001.83-1	53-70-3	Dibenz(a,h)anthracene	ND	mg / Kg	1	0.3	01/21/01
X0128	XG.2001.83-1	132-64-9	Dibenzofuran	ND	mg / Kg	1	0.03	01/21/01
X0128	XG.2001.83-1	84-66-2	Diethylphthalate	ND	mg / Kg	1	0.03	01/21/01
X0128	XG.2001.83-1	131-11-3	Dimethylphthalate	ND	mg / Kg	1	0.03	01/21/01
X0128	XG.2001.83-1	206-44-0	Fluoranthene	ND	mg / Kg	1	0.03	01/21/01
X0128	XG.2001.83-1	86737	Fluorene	ND	mg / Kg	1	0.03	01/21/01
X0128	XG.2001.83-1	118-74-1	Hexachlorobenzene	ND	mg / Kg	1	0.03	01/21/01
X0128	XG.2001.83-1	87-68-3	Hexachlorobutadiene	ND	mg / Kg	1	0.03	01/2
X0128	XG.2001.83-1	77-47-4	Hexachlorocyclopentadiene	ND	mg / Kg	1	1.5	01/21
X0128	XG.2001.83-1	67-72-1	Hexachloroethane	ND	mg / Kg	1	0.03	01/21/01
X0128	XG.2001.83-1	193-39-5	Indeno(1,2,3-cd)pyrene	ND	mg / Kg	1	0.3	01/21/01
X0128	XG.2001.83-1	78-59-1	Isophorone	ND	mg / Kg	1	0.03	01/21/01
X0128	XG.2001.83-1	621-64-7	n-Nitroso-di-n-propylamine	ND	mg / Kg	1	0.03	01/21/01
X0128	XG.2001.83-1	62-75-9	n-Nitroso-dimethyl-amine	ND	mg / Kg	1	0.3	01/21/01
X0128	XG.2001.83-1	86-30-6	n-Nitrosodiphenylamine	ND	mg / Kg	1	0.03	01/21/01
X0128	XG.2001.83-1	91-20-3	Naphthalene	ND	mg / Kg	1	0.03	01/21/01
X0128	XG.2001.83-1	98-95-3	Nitrobenzene	ND	mg / Kg	1	0.03	01/21/01
X0128	XG.2001.83-1	87-86-5	Pentachlorophenol	ND	mg / Kg	1	0.3	01/21/01
X0128	XG.2001.83-1	85-01-8	Phenanthrene	ND	mg / Kg	1	0.03	01/21/01
X0128	XG.2001.83-1	108-95-2	Phenol	ND	mg / Kg	1	0.3	01/21/01
X0128	XG.2001.83-1	129-00-0	Pyrene	ND	mg / Kg	1	0.03	01/21/01
X0128	XG.2001.83-1	110-86-1	Pyridine	ND	mg / Kg	1	0.3	01/21/01
X0128-011		**SW846 3550A/8270B SVOCs by GC/MS**						
X0128	XG.2001.274-1	120-82-1	1,2,4-Trichlorobenzene	ND	mg / Kg	1	0.03	01/30/01
X0128	XG.2001.274-1	95-50-1	1,2-Dichlorobenzene	ND	mg / Kg	1	0.03	01/30/01
X0128	XG.2001.274-1	541-73-1	1,3-Dichlorobenzene	ND	mg / Kg	1	0.03	01/30/01
X0128	XG.2001.274-1	106-46-7	1,4-Dichlorobenzene	ND	mg / Kg	1	0.03	01/30/01
X0128	XG.2001.274-1	90-12-0	1-Methylnaphthalene	ND	mg / Kg	1	0.03	01/30/01
X0128	XG.2001.274-1	58-90-2	2,3,4,6-Tetrachlorophenol	ND	mg / Kg	1	1.5	01/30/01
X0128	XG.2001.274-1	95-95-4	2,4,5-Trichlorophenol	ND	mg / Kg	1	0.3	01/30/01
X0128	XG.2001.274-1	88-06-2	2,4,6-Trichlorophenol	ND	mg / Kg	1	0.3	01/30/01
X0128	XG.2001.274-1	120-83-2	2,4-Dichlorophenol	ND	mg / Kg	1	0.3	01/30/01
X0128	XG.2001.274-1	105-67-9	2,4-Dimethylphenol	ND	mg / Kg	1	0.03	01/3
X0128	XG.2001.274-1	51-28-5	2,4-Dinitrophenol	ND	mg / Kg	1	0.67	01/3

Quality Control Summary

Explanation of codes

D *Not applicable due to sample dilution*
L *Not applicable due to MDL proximity*

Client: **CH2MHILL**
Project: **0101252** **160660.02.FF.SA**

X0128	XG.2001.274-1	121-14-2	2,4-Dinitrotoluene	ND	mg / Kg	1	0.3		01/30/01
X0128	XG.2001.274-1	606-20-2	2,6-Dinitrotoluene	ND	mg / Kg	1	0.3		01/30/01
X0128	XG.2001.274-1	91-58-7	2-Chloronaphthalene	ND	mg / Kg	1	0.03		01/30/01
X0128	XG.2001.274-1	95-57-8	2-Chlorophenol	ND	mg / Kg	1	0.03		01/30/01
X0128	XG.2001.274-1	91-57-6	2-Methylnaphthalene	ND	mg / Kg	1	0.03		01/30/01
X0128	XG.2001.274-1	95-48-7	2-Methylphenol	ND	mg / Kg	1	0.03		01/30/01
X0128	XG.2001.274-1	88-74-4	2-Nitroaniline	ND	mg / Kg	1	0.3		01/30/01
X0128	XG.2001.274-1	88-75-5	2-Nitrophenol	ND	mg / Kg	1	0.3		01/30/01
X0128	XG.2001.274-1		3+4 Methylphenol	ND	mg / Kg	1	0.03		01/30/01
X0128	XG.2001.274-1	91-94-1	3,3-Dichlorobenzidine	ND	mg / Kg	1	0.3		01/30/01
X0128	XG.2001.274-1	99-09-2	3-Nitroaniline	ND	mg / Kg	1	0.3		01/30/01
X0128	XG.2001.274-1	534-52-1	4,6-Dinitro-2-methylphenol	ND	mg / Kg	1	0.3		01/30/01
X0128	XG.2001.274-1	101-55-3	4-Bromophenyl-phenylether	ND	mg / Kg	1	0.03		01/30/01
X0128	XG.2001.274-1	59-50-7	4-Chloro-3-methylphenol	ND	mg / Kg	1	0.3		01/30/01
X0128	XG.2001.274-1	106-47-8	4-Chloroaniline	ND	mg / Kg	1	0.3		01/30/01
X0128	XG.2001.274-1	7005-72-3	4-Chlorophenyl-phenylether	ND	mg / Kg	1	0.03		01/30/01
X0128	XG.2001.274-1	100-01-6	4-Nitroaniline	ND	mg / Kg	1	0.3		01/30/01
X0128	XG.2001.274-1	100-02-7	4-Nitrophenol	ND	mg / Kg	1	0.6		01/30/01
X0128	XG.2001.274-1	83-32-9	Acenaphthene	ND	mg / Kg	1	0.03		01/30/01
X0128	XG.2001.274-1	208-96-8	Acenaphthylene	ND	mg / Kg	1	0.03		01/30/01
X0128	XG.2001.274-1	62-53-3	Aniline	ND	mg / Kg	1	0.3		01/30/01
X0128	XG.2001.274-1	120-12-7	Anthracene	ND	mg / Kg	1	0.03		01/30/01
X0128	XG.2001.274-1		Azobenzene&1,2-Diphenylhydrazine	ND	mg / Kg	1	0.03		01/30/01
X0128	XG.2001.274-1	56-55-3	Benzo (a) anthracene	ND	mg / Kg	1	0.03		01/30/01
X0128	XG.2001.274-1	50-32-8	Benzo(a)pyrene	ND	mg / Kg	1	0.03		01/30/01
X0128	XG.2001.274-1		Benzo(b & k)fluoranthene	ND	mg / Kg	1	0.03		01/30/01
X0128	XG.2001.274-1	191-24-2	Benzo(g,h,i)perylene	ND	mg / Kg	1	0.3		01/30/01
X0128	XG.2001.274-1	64-85-0	Benzoic acid	ND	mg / Kg	1	3		01/30/01
X0128	XG.2001.274-1	100-51-6	Benzyl alcohol	ND	mg / Kg	1	1.5		01/30/01
X0128	XG.2001.274-1	111-44-4	bis (2-Chloroethyl) ether	ND	mg / Kg	1	0.03		01/30/01
X0128	XG.2001.274-1	111-91-1	bis(2-Chloroethoxy)methane	ND	mg / Kg	1	0.03		01/30/01
X0128	XG.2001.274-1	108-60-1	bis(2-Chloroisopropyl)ether	ND	mg / Kg	1	0.03		01/30/01
X0128	XG.2001.274-1	117-81-7	bis(2-Ethylhexyl)phthalate	ND	mg / Kg	1	0.3		01/30/01
X0128	XG.2001.274-1	85-68-7	Butylbenzylphthalate	ND	mg / Kg	1	0.03		01/30/01
X0128	XG.2001.274-1	218-01-9	Chrysene	ND	mg / Kg	1	0.03		01/30/01
X0128	XG.2001.274-1	84-74-2	di-n-Butylphthalate	ND	mg / Kg	1	0.3		01/30/01
X0128	XG.2001.274-1	117-84-0	di-n-Octylpthalate	ND	mg / Kg	1	0.3		01/30/01
X0128	XG.2001.274-1	53-70-3	Dibenz(a,h)anthracene	ND	mg / Kg	1	0.3		01/30/01
X0128	XG.2001.274-1	132-64-9	Dibenzofuran	ND	mg / Kg	1	0.03		01/30/01
X0128	XG.2001.274-1	84-66-2	Diethylphthalate	ND	mg / Kg	1	0.03		01/30/01
X0128	XG.2001.274-1	131-11-3	Dimethylphthalate	ND	mg / Kg	1	0.03		01/30/01
X0128	XG.2001.274-1	206-44-0	Fluoranthene	ND	mg / Kg	1	0.03		01/30/01
X0128	XG.2001.274-1	86737	Fluorene	ND	mg / Kg	1	0.03		01/30/01
X0128	XG.2001.274-1	118-74-1	Hexachlorobenzene	ND	mg / Kg	1	0.03		01/30/01
X0128	XG.2001.274-1	87-68-3	Hexachlorobutadiene	ND	mg / Kg	1	0.03		01/30/01
X0128	XG.2001.274-1	77-47-4	Hexachlorocyclopentadiene	ND	mg / Kg	1	1.5		01/30/01
X0128	XG.2001.274-1	67-72-1	Hexachloroethane	ND	mg / Kg	1	0.03		01/30/01
X0128	XG.2001.274-1	193-39-5	Indeno(1,2,3-cd)pyrene	ND	mg / Kg	1	0.3		01/30/01
	XG.2001.274-1	78-59-1	Isophorone	ND	mg / Kg	1	0.03		01/30/01
X0128	XG.2001.274-1	621-64-7	n-Nitroso-di-n-propylamine	ND	mg / Kg	1	0.03		01/30/01

Quality Control Summary

Client: **CH2MHILL**

Project: **0101252** **160660.02.FF.SA**

Explanation of codes

D *Not applicable due to sample dilu*

L *Not applicable due to MDL proximi*

X0128	XG.2001.274-1	62-75-9	n-Nitroso-dimethyl-amine	ND	mg / Kg	1	0.3	01/30/0 1
X0128	XG.2001.274-1	86-30-6	n-Nitrosodiphenylamine	ND	mg / Kg	1	0.03	01/30/0 1
X0128	XG.2001.274-1	91-20-3	Naphthalene	ND	mg / Kg	1	0.03	01/30/0 1
X0128	XG.2001.274-1	98-95-3	Nitrobenzene	ND	mg / Kg	1	0.03	01/30/0 1
X0128	XG.2001.274-1	87-86-5	Pentachlorophenol	ND	mg / Kg	1	0.3	01/30/0 1
X0128	XG.2001.274-1	85-01-8	Phenanthrene	ND	mg / Kg	1	0.03	01/30/0 1
X0128	XG.2001.274-1	108-95-2	Phenol	ND	mg / Kg	1	0.3	01/30/0 1
X0128	XG.2001.274-1	129-00-0	Pyrene	ND	mg / Kg	1	0.03	01/30/0 1
X0128	XG.2001.274-1	110-86-1	Pyridine	ND	mg / Kg	1	0.3	01/30/0 1
X0128-014		**SW846 3550A/8270B SVOCs by GC/MS**						
X0128	XG.2001.162-1	120-82-1	1,2,4-Trichlorobenzene	ND	mg / Kg	1	0.03	02/05/0 1
X0128	XG.2001.162-1	95-50-1	1,2-Dichlorobenzene	ND	mg / Kg	1	0.03	02/05/01
X0128	XG.2001.162-1	541-73-1	1,3-Dichlorobenzene	ND	mg / Kg	1	0.03	02/05/01
X0128	XG.2001.162-1	106-46-7	1,4-Dichlorobenzene	ND	mg / Kg	1	0.03	02/05/01
X0128	XG.2001.162-1	90-12-0	1-Methylnaphthalene	ND	mg / Kg	1	0.03	02/05/01
X0128	XG.2001.162-1	58-90-2	2,3,4,6-Tetrachlorophenol	ND	mg / Kg	1	1.5	02/05/01
X0128	XG.2001.162-1	95-95-4	2,4,5-Trichlorophenol	ND	mg / Kg	1	0.3	02/05/01
X0128	XG.2001.162-1	88-06-2	2,4,6-Trichlorophenol	ND	mg / Kg	1	0.3	02/05/01
X0128	XG.2001.162-1	120-83-2	2,4-Dichlorophenol	ND	mg / Kg	1	0.3	02/05/01
X0128	XG.2001.162-1	105-67-9	2,4-Dimethylphenol	ND	mg / Kg	1	0.03	02/05/01
X0128	XG.2001.162-1	51-28-5	2,4-Dinitrophenol	ND	mg / Kg	1	0.67	02/05/01
X0128	XG.2001.162-1	121-14-2	2,4-Dinitrotoluene	ND	mg / Kg	1	0.3	02/05/01
X0128	XG.2001.162-1	606-20-2	2,6-Dinitrotoluene	ND	mg / Kg	1	0.3	02/05
X0128	XG.2001.162-1	91-58-7	2-Chloronaphthalene	ND	mg / Kg	1	0.03	02/0
X0128	XG.2001.162-1	95-57-8	2-Chlorophenol	ND	mg / Kg	1	0.03	02/05/01
X0128	XG.2001.162-1	91-57-6	2-Methylnaphthalene	ND	mg / Kg	1	0.03	02/05/01
X0128	XG.2001.162-1	95-48-7	2-Methylphenol	ND	mg / Kg	1	0.03	02/05/01
X0128	XG.2001.162-1	88-74-4	2-Nitroaniline	ND	mg / Kg	1	0.3	02/05/01
X0128	XG.2001.162-1	88-75-5	2-Nitrophenol	ND	mg / Kg	1	0.3	02/05/01
X0128	XG.2001.162-1		3+4 Methylphenol	ND	mg / Kg	1	0.03	02/05/01
X0128	XG.2001.162-1	91-94-1	3,3-Dichlorobenzidine	ND	mg / Kg	1	0.3	02/05/01
X0128	XG.2001.162-1	99-09-2	3-Nitroaniline	ND	mg / Kg	1	0.3	02/05/01
X0128	XG.2001.162-1	534-52-1	4,6-Dinitro-2-methylphenol	ND	mg / Kg	1	0.3	02/05/01
X0128	XG.2001.162-1	101-55-3	4-Bromophenyl-phenylether	ND	mg / Kg	1	0.03	02/05/01
X0128	XG.2001.162-1	59-50-7	4-Chloro-3-methylphenol	ND	mg / Kg	1	0.3	02/05/01
X0128	XG.2001.162-1	106-47-8	4-Chloroaniline	ND	mg / Kg	1	0.3	02/05/01
X0128	XG.2001.162-1	7005-72-3	4-Chlorophenyl-phenylether	ND	mg / Kg	1	0.03	02/05/01
X0128	XG.2001.162-1	100-01-6	4-Nitroaniline	ND	mg / Kg	1	0.3	02/05/01
X0128	XG.2001.162-1	100-02-7	4-Nitrophenol	ND	mg / Kg	1	0.6	02/05/01
X0128	XG.2001.162-1	83-32-9	Acenaphthene	ND	mg / Kg	1	0.03	02/05/01
X0128	XG.2001.162-1	208-96-8	Acenaphthylene	ND	mg / Kg	1	0.03	02/05/01
X0128	XG.2001.162-1	62-53-3	Aniline	ND	mg / Kg	1	0.3	02/05/01
X0128	XG.2001.162-1	120-12-7	Anthracene	ND	mg / Kg	1	0.03	02/05/01
X0128	XG.2001.162-1		Azobenzene&1,2-Diphenylhydrazine	ND	mg / Kg	1	0.03	02/05/0
X0128	XG.2001.162-1	56-55-3	Benzo (a) anthracene	ND	mg / Kg	1	0.03	02/05/0
X0128	XG.2001.162-1	50-32-8	Benzo(a)pyrene	ND	mg / Kg	1	0.03	02/05/0
X0128	XG.2001.162-1		Benzo(b & k)fluoranthene	ND	mg / Kg	1	0.03	02/05/0
X0128	XG.2001.162-1	191-24-2	Benzo(g,h,i)perylene	ND	mg / Kg	1	0.3	02/05
X0128	XG.2001.162-1	64-85-0	Benzoic acid	ND	mg / Kg	1	3	02/05

Quality Control Summary

Explanation of codes

D *Not applicable due to sample dilution*
L *Not applicable due to MDL proximity*

Client: CH2MHILL
Project: 0101252 160660.02.FF.SA

X0128	XG.2001.162-1	100-51-6	Benzyl alcohol	ND	mg / Kg	1	1.5	02/05/01
X0128	XG.2001.162-1	111-44-4	bis (2-Chloroethyl) ether	ND	mg / Kg	1	0.03	02/05/01
X0128	XG.2001.162-1	111-91-1	bis(2-Chloroethoxy)methane	ND	mg / Kg	1	0.03	02/05/01
X0128	XG.2001.162-1	108-60-1	bis(2-Chloroisopropyl)ether	ND	mg / Kg	1	0.03	02/05/01
X0128	XG.2001.162-1	117-81-7	bis(2-Ethylhexyl)phthalate	ND	mg / Kg	1	0.3	02/05/01
X0128	XG.2001.162-1	85-68-7	Butylbenzylphthalate	ND	mg / Kg	1	0.03	02/05/01
X0128	XG.2001.162-1	218-01-9	Chrysene	ND	mg / Kg	1	0.03	02/05/01
X0128	XG.2001.162-1	84-74-2	di-n-Butylphthalate	ND	mg / Kg	1	0.3	02/05/01
X0128	XG.2001.162-1	117-84-0	di-n-Octylpthalate	ND	mg / Kg	1	0.3	02/05/01
X0128	XG.2001.162-1	53-70-3	Dibenz(a,h)anthracene	ND	mg / Kg	1	0.3	02/05/01
X0128	XG.2001.162-1	132-64-9	Dibenzofuran	ND	mg / Kg	1	0.03	02/05/01
X0128	XG.2001.162-1	84-66-2	Diethylphthalate	ND	mg / Kg	1	0.03	02/05/01
X0128	XG.2001.162-1	131-11-3	Dimethylphthalate	ND	mg / Kg	1	0.03	02/05/01
X0128	XG.2001.162-1	206-44-0	Fluoranthene	ND	mg / Kg	1	0.03	02/05/01
X0128	XG.2001.162-1	86737	Fluorene	ND	mg / Kg	1	0.03	02/05/01
X0128	XG.2001.162-1	118-74-1	Hexachlorobenzene	ND	mg / Kg	1	0.03	02/05/01
X0128	XG.2001.162-1	87-68-3	Hexachlorobutadiene	ND	mg / Kg	1	0.03	02/05/01
X0128	XG.2001.162-1	77-47-4	Hexachlorocyclopentadiene	ND	mg / Kg	1	1.5	02/05/01
X0128	XG.2001.162-1	67-72-1	Hexachloroethane	ND	mg / Kg	1	0.03	02/05/01
X0128	XG.2001.162-1	193-39-5	Indeno(1,2,3-cd)pyrene	ND	mg / Kg	1	0.3	02/05/01
X0128	XG.2001.162-1	78-59-1	Isophorone	ND	mg / Kg	1	0.03	02/05/01
X0128	XG.2001.162-1	621-64-7	n-Nitroso-di-n-propylamine	ND	mg / Kg	1	0.03	02/05/01
X0128	XG.2001.162-1	62-75-9	n-Nitroso-dimethyl-amine	ND	mg / Kg	1	0.3	02/05/01
[illegible]	XG.2001.162-1	86-30-6	n-Nitrosodiphenylamine	ND	mg / Kg	1	0.03	02/05/01
[illegible]	XG.2001.162-1	91-20-3	Naphthalene	ND	mg / Kg	1	0.03	02/05/01
X0128	XG.2001.162-1	98-95-3	Nitrobenzene	ND	mg / Kg	1	0.03	02/05/01
X0128	XG.2001.162-1	87-86-5	Pentachlorophenol	ND	mg / Kg	1	0.3	02/05/01
X0128	XG.2001.162-1	85-01-8	Phenanthrene	ND	mg / Kg	1	0.03	02/05/01
X0128	XG.2001.162-1	108-95-2	Phenol	ND	mg / Kg	1	0.3	02/05/01
X0128	XG.2001.162-1	129-00-0	Pyrene	ND	mg / Kg	1	0.03	02/05/01
X0128	XG.2001.162-1	110-86-1	Pyridine	ND	mg / Kg	1	0.3	02/05/01
X0128-016		**SW846 3550A/8270B SVOCs by GC/MS**						
X0128	XG.2001.189-2	120-82-1	1,2,4-Trichlorobenzene	ND	mg / Kg	1	0.03	02/09/01
X0128	XG.2001.189-2	95-50-1	1,2-Dichlorobenzene	ND	mg / Kg	1	0.03	02/09/01
X0128	XG.2001.189-2	541-73-1	1,3-Dichlorobenzene	ND	mg / Kg	1	0.03	02/09/01
X0128	XG.2001.189-2	106-46-7	1,4-Dichlorobenzene	ND	mg / Kg	1	0.03	02/09/01
X0128	XG.2001.189-2	90-12-0	1-Methylnaphthalene	ND	mg / Kg	1	0.03	02/09/01
X0128	XG.2001.189-2	58-90-2	2,3,4,6-Tetrachlorophenol	ND	mg / Kg	1	1.5	02/09/01
X0128	XG.2001.189-2	95-95-4	2,4,5-Trichlorophenol	ND	mg / Kg	1	0.3	02/09/01
X0128	XG.2001.189-2	88-06-2	2,4,6-Trichlorophenol	ND	mg / Kg	1	0.3	02/09/01
X0128	XG.2001.189-2	120-83-2	2,4-Dichlorophenol	ND	mg / Kg	1	0.3	02/09/01
X0128	XG.2001.189-2	105-67-9	2,4-Dimethylphenol	ND	mg / Kg	1	0.03	02/09/01
X0128	XG.2001.189-2	51-28-5	2,4-Dinitrophenol	ND	mg / Kg	1	0.67	02/09/01
X0128	XG.2001.189-2	121-14-2	2,4-Dinitrotoluene	ND	mg / Kg	1	0.3	02/09/01
X0128	XG.2001.189-2	606-20-2	2,6-Dinitrotoluene	ND	mg / Kg	1	0.3	02/09/01
X0128	XG.2001.189-2	91-58-7	2-Chloronaphthalene	ND	mg / Kg	1	0.03	02/09/01
X0128	XG.2001.189-2	95-57-8	2-Chlorophenol	ND	mg / Kg	1	0.03	02/09/01
X0128	XG.2001.189-2	91-57-6	2-Methylnaphthalene	ND	mg / Kg	1	0.03	02/09/01
[illegible]	XG.2001.189-2	95-48-7	2-Methylphenol	ND	mg / Kg	1	0.03	02/09/01
[illegible]	XG.2001.189-2	88-74-4	2-Nitroaniline	ND	mg / Kg	1	0.3	02/09/01

Quality Control Summary

Client: **CH2MHILL**

Project: **0101252** **160660.02.FF.SA**

Explanation of codes

D *Not applicable due to sample dil*

L *Not applicable due to MDL proximi*

X0128	XG.2001.189-2	88-75-5	2-Nitrophenol	ND	mg / Kg	1	0.3	02/09/01
X0128	XG.2001.189-2		3+4 Methylphenol	ND	mg / Kg	1	0.03	02/09/01
X0128	XG.2001.189-2	91-94-1	3,3-Dichlorobenzidine	ND	mg / Kg	1	0.3	02/09/01
X0128	XG.2001.189-2	99-09-2	3-Nitroaniline	ND	mg / Kg	1	0.3	02/09/01
X0128	XG.2001.189-2	534-52-1	4,6-Dinitro-2-methylphenol	ND	mg / Kg	1	0.3	02/09/01
X0128	XG.2001.189-2	101-55-3	4-Bromophenyl-phenylether	ND	mg / Kg	1	0.03	02/09/01
X0128	XG.2001.189-2	59-50-7	4-Chloro-3-methylphenol	ND	mg / Kg	1	0.3	02/09/01
X0128	XG.2001.189-2	106-47-8	4-Chloroaniline	ND	mg / Kg	1	0.3	02/09/01
X0128	XG.2001.189-2	7005-72-3	4-Chlorophenyl-phenylether	ND	mg / Kg	1	0.03	02/09/01
X0128	XG.2001.189-2	100-01-6	4-Nitroaniline	ND	mg / Kg	1	0.3	02/09/01
X0128	XG.2001.189-2	100-02-7	4-Nitrophenol	ND	mg / Kg	1	0.6	02/09/01
X0128	XG.2001.189-2	83-32-9	Acenaphthene	ND	mg / Kg	1	0.03	02/09/01
X0128	XG.2001.189-2	208-96-8	Acenaphthylene	ND	mg / Kg	1	0.03	02/09/01
X0128	XG.2001.189-2	62-53-3	Aniline	ND	mg / Kg	1	0.3	02/09/01
X0128	XG.2001.189-2	120-12-7	Anthracene	ND	mg / Kg	1	0.03	02/09/01
X0128	XG.2001.189-2		Azobenzene&1,2-Diphenylhydrazine	ND	mg / Kg	1	0.03	02/09/01
X0128	XG.2001.189-2	56-55-3	Benzo (a) anthracene	ND	mg / Kg	1	0.03	02/09/01
X0128	XG.2001.189-2	50-32-8	Benzo(a)pyrene	ND	mg / Kg	1	0.03	02/09/01
X0128	XG.2001.189-2		Benzo(b & k)fluoranthene	ND	mg / Kg	1	0.03	02/09/01
X0128	XG.2001.189-2	191-24-2	Benzo(g,h,i)perylene	ND	mg / Kg	1	0.3	02/09/01
X0128	XG.2001.189-2	64-85-0	Benzoic acid	ND	mg / Kg	1	3	02/09/01
X0128	XG.2001.189-2	100-51-6	Benzyl alcohol	ND	mg / Kg	1	1.5	02/09/01
X0128	XG.2001.189-2	111-44-4	bis (2-Chloroethyl) ether	ND	mg / Kg	1	0.03	02/0
X0128	XG.2001.189-2	111-91-1	bis(2-Chloroethoxy)methane	ND	mg / Kg	1	0.03	02/09
X0128	XG.2001.189-2	108-60-1	bis(2-Chloroisopropyl)ether	ND	mg / Kg	1	0.03	02/09/01
X0128	XG.2001.189-2	117-81-7	bis(2-Ethylhexyl)phthalate	ND	mg / Kg	1	0.3	02/09/01
X0128	XG.2001.189-2	85-68-7	Butylbenzylphthalate	ND	mg / Kg	1	0.03	02/09/01
X0128	XG.2001.189-2	218-01-9	Chrysene	ND	mg / Kg	1	0.03	02/09/01
X0128	XG.2001.189-2	84-74-2	di-n-Butylphthalate	ND	mg / Kg	1	0.3	02/09/01
X0128	XG.2001.189-2	117-84-0	di-n-Octylpthalate	ND	mg / Kg	1	0.3	02/09/01
X0128	XG.2001.189-2	53-70-3	Dibenz(a,h)anthracene	ND	mg / Kg	1	0.3	02/09/01
X0128	XG.2001.189-2	132-64-9	Dibenzofuran	ND	mg / Kg	1	0.03	02/09/01
X0128	XG.2001.189-2	84-66-2	Diethylphthalate	ND	mg / Kg	1	0.03	02/09/01
X0128	XG.2001.189-2	131-11-3	Dimethylphthalate	ND	mg / Kg	1	0.03	02/09/01
X0128	XG.2001.189-2	206-44-0	Fluoranthene	ND	mg / Kg	1	0.03	02/09/01
X0128	XG.2001.189-2	86737	Fluorene	ND	mg / Kg	1	0.03	02/09/01
X0128	XG.2001.189-2	118-74-1	Hexachlorobenzene	ND	mg / Kg	1	0.03	02/09/01
X0128	XG.2001.189-2	87-68-3	Hexachlorobutadiene	ND	mg / Kg	1	0.03	02/09/01
X0128	XG.2001.189-2	77-47-4	Hexachlorocyclopentadiene	ND	mg / Kg	1	1.5	02/09/01
X0128	XG.2001.189-2	67-72-1	Hexachloroethane	ND	mg / Kg	1	0.03	02/09/01
X0128	XG.2001.189-2	193-39-5	Indeno(1,2,3-cd)pyrene	ND	mg / Kg	1	0.3	02/09/01
X0128	XG.2001.189-2	78-59-1	Isophorone	ND	mg / Kg	1	0.03	02/09/01
X0128	XG.2001.189-2	621-64-7	n-Nitroso-di-n-propylamine	ND	mg / Kg	1	0.03	02/09/01
X0128	XG.2001.189-2	62-75-9	n-Nitroso-dimethyl-amine	ND	mg / Kg	1	0.3	02/09/01
X0128	XG.2001.189-2	86-30-6	n-Nitrosodiphenylamine	ND	mg / Kg	1	0.03	02/09/01
X0128	XG.2001.189-2	91-20-3	Naphthalene	ND	mg / Kg	1	0.03	02/09/01
X0128	XG.2001.189-2	98-95-3	Nitrobenzene	ND	mg / Kg	1	0.03	02/09/01
X0128	XG.2001.189-2	87-86-5	Pentachlorophenol	ND	mg / Kg	1	0.3	02/09/01
X0128	XG.2001.189-2	85-01-8	Phenanthrene	ND	mg / Kg	1	0.03	02/0
X0128	XG.2001.189-2	108-95-2	Phenol	ND	mg / Kg	1	0.3	02/09/01

Quality Control Summary

Explanation of codes

D *Not applicable due to sample dilution*
L *Not applicable due to MDL proximity*

Client: **CH2MHILL**
Project: **0101252** **160660.02.FF.SA**

X0128	XG.2001.189-2	129-00-0	Pyrene	ND	mg / Kg	1	0.03	02/09/01
X0128	XG.2001.189-2	110-86-1	Pyridine	ND	mg / Kg	1	0.3	02/09/01
X0128-018		SW846 3550A/8270B SVOCs by GC/MS						
X0128	XG.2001.201-1	120-82-1	1,2,4-Trichlorobenzene	ND	mg / Kg	1	0.03	02/13/01
X0128	XG.2001.201-1	95-50-1	1,2-Dichlorobenzene	ND	mg / Kg	1	0.03	02/13/01
X0128	XG.2001.201-1	541-73-1	1,3-Dichlorobenzene	ND	mg / Kg	1	0.03	02/13/01
X0128	XG.2001.201-1	106-46-7	1,4-Dichlorobenzene	ND	mg / Kg	1	0.03	02/13/01
X0128	XG.2001.201-1	90-12-0	1-Methylnaphthalene	ND	mg / Kg	1	0.03	02/13/01
X0128	XG.2001.201-1	58-90-2	2,3,4,6-Tetrachlorophenol	ND	mg / Kg	1	1.5	02/13/01
X0128	XG.2001.201-1	95-95-4	2,4,5-Trichlorophenol	ND	mg / Kg	1	0.3	02/13/01
X0128	XG.2001.201-1	88-06-2	2,4,6-Trichlorophenol	ND	mg / Kg	1	0.3	02/13/01
X0128	XG.2001.201-1	120-83-2	2,4-Dichlorophenol	ND	mg / Kg	1	0.3	02/13/01
X0128	XG.2001.201-1	105-67-9	2,4-Dimethylphenol	ND	mg / Kg	1	0.03	02/13/01
X0128	XG.2001.201-1	51-28-5	2,4-Dinitrophenol	ND	mg / Kg	1	0.67	02/13/01
X0128	XG.2001.201-1	121-14-2	2,4-Dinitrotoluene	ND	mg / Kg	1	0.3	02/13/01
X0128	XG.2001.201-1	606-20-2	2,6-Dinitrotoluene	ND	mg / Kg	1	0.3	02/13/01
X0128	XG.2001.201-1	91-58-7	2-Chloronaphthalene	ND	mg / Kg	1	0.03	02/13/01
X0128	XG.2001.201-1	95-57-8	2-Chlorophenol	ND	mg / Kg	1	0.03	02/13/01
X0128	XG.2001.201-1	91-57-6	2-Methylnaphthalene	ND	mg / Kg	1	0.03	02/13/01
X0128	XG.2001.201-1	95-48-7	2-Methylphenol	ND	mg / Kg	1	0.03	02/13/01
X0128	XG.2001.201-1	88-74-4	2-Nitroaniline	ND	mg / Kg	1	0.3	02/13/01
X0128	XG.2001.201-1	88-75-5	2-Nitrophenol	ND	mg / Kg	1	0.3	02/13/01
X0128	XG.2001.201-1		3+4 Methylphenol	ND	mg / Kg	1	0.03	02/13/01
	XG.2001.201-1	91-94-1	3,3-Dichlorobenzidine	ND	mg / Kg	1	0.3	02/13/01
X0128	XG.2001.201-1	99-09-2	3-Nitroaniline	ND	mg / Kg	1	0.3	02/13/01
X0128	XG.2001.201-1	534-52-1	4,6-Dinitro-2-methylphenol	ND	mg / Kg	1	0.3	02/13/01
X0128	XG.2001.201-1	101-55-3	4-Bromophenyl-phenylether	ND	mg / Kg	1	0.03	02/13/01
X0128	XG.2001.201-1	59-50-7	4-Chloro-3-methylphenol	ND	mg / Kg	1	0.3	02/13/01
X0128	XG.2001.201-1	106-47-8	4-Chloroaniline	ND	mg / Kg	1	0.3	02/13/01
X0128	XG.2001.201-1	7005-72-3	4-Chlorophenyl-phenylether	ND	mg / Kg	1	0.03	02/13/01
X0128	XG.2001.201-1	100-01-6	4-Nitroaniline	ND	mg / Kg	1	0.3	02/13/01
X0128	XG.2001.201-1	100-02-7	4-Nitrophenol	ND	mg / Kg	1	0.6	02/13/01
X0128	XG.2001.201-1	83-32-9	Acenaphthene	ND	mg / Kg	1	0.03	02/13/01
X0128	XG.2001.201-1	208-96-8	Acenaphthylene	ND	mg / Kg	1	0.03	02/13/01
X0128	XG.2001.201-1	62-53-3	Aniline	ND	mg / Kg	1	0.3	02/13/01
X0128	XG.2001.201-1	120-12-7	Anthracene	ND	mg / Kg	1	0.03	02/13/01
X0128	XG.2001.201-1		Azobenzene&1,2-Diphenylhydrazine	ND	mg / Kg	1	0.03	02/13/01
X0128	XG.2001.201-1	56-55-3	Benzo (a) anthracene	ND	mg / Kg	1	0.03	02/13/01
X0128	XG.2001.201-1	50-32-8	Benzo(a)pyrene	ND	mg / Kg	1	0.03	02/13/01
X0128	XG.2001.201-1		Benzo(b & k)fluoranthene	ND	mg / Kg	1	0.03	02/13/01
X0128	XG.2001.201-1	191-24-2	Benzo(g,h,i)perylene	ND	mg / Kg	1	0.3	02/13/01
X0128	XG.2001.201-1	64-85-0	Benzoic acid	ND	mg / Kg	1	3	02/13/01
X0128	XG.2001.201-1	100-51-6	Benzyl alcohol	ND	mg / Kg	1	1.5	02/13/01
X0128	XG.2001.201-1	111-44-4	bis (2-Chloroethyl) ether	ND	mg / Kg	1	0.03	02/13/01
X0128	XG.2001.201-1	111-91-1	bis(2-Chloroethoxy)methane	ND	mg / Kg	1	0.03	02/13/01
X0128	XG.2001.201-1	108-60-1	bis(2-Chloroisopropyl)ether	ND	mg / Kg	1	0.03	02/13/01
X0128	XG.2001.201-1	117-81-7	bis(2-Ethylhexyl)phthalate	ND	mg / Kg	1	0.3	02/13/01
X0128	XG.2001.201-1	85-68-7	Butylbenzylphthalate	ND	mg / Kg	1	0.03	02/13/01
	XG.2001.201-1	218-01-9	Chrysene	ND	mg / Kg	1	0.03	02/13/01

Quality Control Summary

Client: **CH2MHILL**

Project: **0101252** **160660.02.FF.SA**

Explanation of codes

D *Not applicable due to sample dilu*

L *Not applicable due to MDL proximi*

X0128	XG.2001.201-1	84-74-2	di-n-Butylphthalate	ND	mg / Kg	1	0.3	02/13/01
X0128	XG.2001.201-1	117-84-0	di-n-Octylpthalate	ND	mg / Kg	1	0.3	02/13/01
X0128	XG.2001.201-1	53-70-3	Dibenz(a,h)anthracene	ND	mg / Kg	1	0.3	02/13/01
X0128	XG.2001.201-1	132-64-9	Dibenzofuran	ND	mg / Kg	1	0.03	02/13/01
X0128	XG.2001.201-1	84-66-2	Diethylphthalate	ND	mg / Kg	1	0.03	02/13/01
X0128	XG.2001.201-1	131-11-3	Dimethylphthalate	ND	mg / Kg	1	0.03	02/13/01
X0128	XG.2001.201-1	206-44-0	Fluoranthene	ND	mg / Kg	1	0.03	02/13/01
X0128	XG.2001.201-1	86737	Fluorene	ND	mg / Kg	1	0.03	02/13/01
X0128	XG.2001.201-1	118-74-1	Hexachlorobenzene	ND	mg / Kg	1	0.03	02/13/01
X0128	XG.2001.201-1	87-68-3	Hexachlorobutadiene	ND	mg / Kg	1	0.03	02/13/01
X0128	XG.2001.201-1	77-47-4	Hexachlorocyclopentadiene	ND	mg / Kg	1	1.5	02/13/01
X0128	XG.2001.201-1	67-72-1	Hexachloroethane	ND	mg / Kg	1	0.03	02/13/01
X0128	XG.2001.201-1	193-39-5	Indeno(1,2,3-cd)pyrene	ND	mg / Kg	1	0.3	02/13/01
X0128	XG.2001.201-1	78-59-1	Isophorone	ND	mg / Kg	1	0.03	02/13/01
X0128	XG.2001.201-1	621-64-7	n-Nitroso-di-n-propylamine	ND	mg / Kg	1	0.03	02/13/01
X0128	XG.2001.201-1	62-75-9	n-Nitroso-dimethyl-amine	ND	mg / Kg	1	0.3	02/13/01
X0128	XG.2001.201-1	86-30-6	n-Nitrosodiphenylamine	ND	mg / Kg	1	0.03	02/13/01
X0128	XG.2001.201-1	91-20-3	Naphthalene	ND	mg / Kg	1	0.03	02/13/01
X0128	XG.2001.201-1	98-95-3	Nitrobenzene	ND	mg / Kg	1	0.03	02/13/0
X0128	XG.2001.201-1	87-86-5	Pentachlorophenol	ND	mg / Kg	1	0.3	02/13/0
X0128	XG.2001.201-1	85-01-8	Phenanthrene	ND	mg / Kg	1	0.03	02/13/0
X0128	XG.2001.201-1	108-95-2	Phenol	ND	mg / Kg	1	0.3	02/13/0
X0128	XG.2001.201-1	129-00-0	Pyrene	ND	mg / Kg	1	0.03	02/13/0
X0128	XG.2001.201-1	110-86-1	Pyridine	ND	mg / Kg	1	0.3	02/13
X0133-003		**SW846 5030A/8021B Purgeable VOCs by GC/PID**						
X0133	XG.2001.94-5	71-43-2	Benzene	ND	mg / Kg	1	0.005	01/22/0
X0133	XG.2001.94-5	100-41-4	Ethylbenzene	ND	mg / Kg	1	0.005	01/22/0
X0133	XG.2001.94-5	95-47-6	o-Xylene	ND	mg / Kg	1	0.005	01/22/0
X0133	XG.2001.94-5	108-38-3/106-42	p/m-Xylenes	ND	mg / Kg	1	0.01	01/22/0
X0133	XG.2001.94-5	108-88-3	Toluene	ND	mg / Kg	1	0.005	01/22/0
X0133-004		**SW846 5030A/8021B Purgeable VOCs by GC/PID**						
X0133	XG.2001.98-7	71-43-2	Benzene	ND	mg / Kg	1	0.005	01/23/01
X0133	XG.2001.98-7	100-41-4	Ethylbenzene	ND	mg / Kg	1	0.005	01/23/01
X0133	XG.2001.98-7	95-47-6	o-Xylene	ND	mg / Kg	1	0.005	01/23/01
X0133	XG.2001.98-7	108-38-3/106-42	p/m-Xylenes	ND	mg / Kg	1	0.01	01/23/01
X0133	XG.2001.98-7	108-88-3	Toluene	ND	mg / Kg	1	0.005	01/23/01
X0133-009		**SW846 5030A/8021B Purgeable VOCs by GC/PID**						
X0133	XG.2001.108-5	71-43-2	Benzene	ND	mg / Kg	1	0.005	01/24/01
X0133	XG.2001.108-5	100-41-4	Ethylbenzene	ND	mg / Kg	1	0.005	01/24/01
X0133	XG.2001.108-5	95-47-6	o-Xylene	ND	mg / Kg	1	0.005	01/24/01
X0133	XG.2001.108-5	108-38-3/106-42	p/m-Xylenes	ND	mg / Kg	1	0.01	01/24/01
X0133	XG.2001.108-5	108-88-3	Toluene	ND	mg / Kg	1	0.005	01/24/01
X0133-016		**SW846 5030A/8021B Purgeable VOCs by GC/PID**						
X0133	XG.2001.123-13	71-43-2	Benzene	ND	mg / Kg	1	0.005	01/26/01
X0133	XG.2001.123-13	100-41-4	Ethylbenzene	ND	mg / Kg	1	0.005	01/26/01
X0133	XG.2001.123-13	95-47-6	o-Xylene	ND	mg / Kg	1	0.005	01/26

Quality Control Summary

Explanation of codes

D *Not applicable due to sample dilution*
L *Not applicable due to MDL proximity*

Client: **CH2MHILL**
Project: **0101252** **160660.02.FF.SA**

X0133	XG.2001.123-13	108-38-3/106-42	p/m-Xylenes	ND	mg / Kg	1	0.01	01/26/01
X0133	XG.2001.123-13	108-88-3	Toluene	ND	mg / Kg	1	0.005	01/26/01
X0133-018		**SW846 5030A/8021B Purgeable VOCs by GC/PID**						
X0133	XG.2001.134-1	71-43-2	Benzene	ND	mg / Kg	1	0.005	01/30/01
X0133	XG.2001.134-1	100-41-4	Ethylbenzene	ND	mg / Kg	1	0.005	01/30/01
X0133	XG.2001.134-1	95-47-6	o-Xylene	ND	mg / Kg	1	0.005	01/30/01
X0133	XG.2001.134-1	108-38-3/106-42	p/m-Xylenes	ND	mg / Kg	1	0.01	01/30/01
X0133	XG.2001.134-1	108-88-3	Toluene	ND	mg / Kg	1	0.005	01/30/01
X0133-025		**SW846 5030A/8021B Purgeable VOCs by GC/PID**						
X0133	XG.2001.139-1	71-43-2	Benzene	ND	mg / Kg	1	0.005	01/31/01
X0133	XG.2001.139-1	100-41-4	Ethylbenzene	ND	mg / Kg	1	0.005	01/31/01
X0133	XG.2001.139-1	95-47-6	o-Xylene	ND	mg / Kg	1	0.005	01/31/01
X0133	XG.2001.139-1	108-38-3/106-42	p/m-Xylenes	ND	mg / Kg	1	0.01	01/31/01
X0133	XG.2001.139-1	108-88-3	Toluene	ND	mg / Kg	1	0.005	01/31/01
X0133-034		**SW846 5030A/8021B Purgeable VOCs by GC/PID**						
X0133	XG.2001.150-8	71-43-2	Benzene	ND	mg / Kg	1	0.005	02/01/01
X0133	XG.2001.150-8	100-41-4	Ethylbenzene	ND	mg / Kg	1	0.005	02/01/01
X0133	XG.2001.150-8	95-47-6	o-Xylene	ND	mg / Kg	1	0.005	02/01/01
X0133	XG.2001.150-8	108-38-3/106-42	p/m-Xylenes	ND	mg / Kg	1	0.01	02/01/01
[illegible]	XG.2001.150-8	108-88-3	Toluene	ND	mg / Kg	1	0.005	02/01/01
X0133-039		**SW846 5030A/8021B Purgeable VOCs by GC/PID**						
X0133	XG.2001.178-6	71-43-2	Benzene	ND	mg / Kg	1	0.005	02/08/01
X0133	XG.2001.178-6	100-41-4	Ethylbenzene	ND	mg / Kg	1	0.005	02/08/01
X0133	XG.2001.178-6	95-47-6	o-Xylene	ND	mg / Kg	1	0.005	02/08/01
X0133	XG.2001.178-6	108-38-3/106-42	p/m-Xylenes	ND	mg / Kg	1	0.01	02/08/01
X0133	XG.2001.178-6	108-88-3	Toluene	ND	mg / Kg	1	0.005	02/08/01
X0133-041		**SW846 5030A/8021B Purgeable VOCs by GC/PID**						
X0133	XG.2001.191-1	71-43-2	Benzene	ND	mg / Kg	1	0.005	02/12/01
X0133	XG.2001.191-1	100-41-4	Ethylbenzene	ND	mg / Kg	1	0.005	02/12/01
X0133	XG.2001.191-1	95-47-6	o-Xylene	ND	mg / Kg	1	0.005	02/12/01
X0133	XG.2001.191-1	108-38-3/106-42	p/m-Xylenes	ND	mg / Kg	1	0.01	02/12/01
X0133	XG.2001.191-1	108-88-3	Toluene	ND	mg / Kg	1	0.005	02/12/01
X018-001		**SW846 ME/8015A Diesel Range Organics by GC/FID**						
X018	XG.2001.41-1		Diesel Range Organics	ND	mg / Kg	1	25	01/09/01
X018-010		**SW846 ME/8015A Diesel Range Organics by GC/FID**						
X018	XG.2001.121-1		Diesel Range Organics	ND	mg / Kg	1	25	01/26/01
X018-016		**SW846 ME/8015A Diesel Range Organics by GC/FID**						
X018	XG.2001.130-1		Diesel Range Organics	ND	mg / Kg	1	25	01/30/01
X018-023		**SW846 ME/8015A Diesel Range Organics by GC/FID**						
X018	XG.2001.148-1		Diesel Range Organics	ND	mg / Kg	1	25	02/01/01
[illegible]-026		**SW846 ME/8015A Diesel Range Organics by GC/FID**						
[illegible]	XG.2001.153-1		Diesel Range Organics	ND	mg / Kg	1	25	02/02/01

Quality Control Summary

Client: **CH2MHILL**

Project: **0101252** **160660.02.FF.SA**

Explanation of codes

D *Not applicable due to sample dilut*

L *Not applicable due to MDL proximit*

OC Type **MS: Matrix Spike** QC Matrix **SOLID**

QC Group	Run Sequence	CAS #	Analyte	Result	Units	Dilution Factor	Detection Limit	Code	Run Date
X0114-012		**SW846 5030A/8015A GRO by GC/FID**							
X0114	XG.2001.56-3		Gasoline Range Organics	112	% Recovery	10	NA		01/10/0
X0127-003		**SW846 8260A Purgeable VOCs by GC/MS**							
X0127	XG.2001.69-3	75-34-3	1,1 Dichloroethene	116	% Recovery	1	NA		01/18/0
X0127	XG.2001.69-3	106-46-7	1,4 Dichlorobenzene	104	% Recovery	1	NA		01/18/0
X0127	XG.2001.69-3	71-43-2	Benzene	117	% Recovery	1	NA		01/18/0
X0127	XG.2001.69-3	108-90-7	Chlorobenzene	110	% Recovery	1	NA		01/18/0
X0127	XG.2001.69-3	108-88-3	Toluene	117	% Recovery	1	NA		01/18/0
X0127	XG.2001.69-3	79-01-6	Trichloroethene	109	% Recovery	1	NA		01/18/0
X0128-005		**SW846 3550A/8270B SVOCs by GC/MS**							
X0128	XG.2001.92-2	120-82-1	1,2,4-Trichlorobenzene	72	% Recovery	1	NA		01/22/0
X0128	XG.2001.92-2	106-46-7	1,4-Dichlorobenzene	75	% Recovery	1	NA		01/22/0
X0128	XG.2001.92-2	121-14-2	2,4-Dinitrotoluene	84	% Recovery	1	NA		01/22/0
X0128	XG.2001.92-2	95-57-8	2-Chlorophenol	84	% Recovery	1	NA		01/22/0
X0128	XG.2001.92-2	59-50-7	4-Chloro-3-methylphenol	89	% Recovery	1	NA		01/22/0
X0128	XG.2001.92-2	100-02-7	4-Nitrophenol	95	% Recovery	1	NA		01/22/0
X0128	XG.2001.92-2	83-32-9	Acenaphthene	94	% Recovery	1	NA		01/22
X0128	XG.2001.92-2	117-84-0	di-n-Octylpthalate	80	% Recovery	1	NA		01/22/0
X0128	XG.2001.92-2	621-64-7	n-Nitroso-di-n-propylamine	94	% Recovery	1	NA		01/22/0
X0128	XG.2001.92-2	87-86-5	Pentachlorophenol	94	% Recovery	1	NA		01/22/0
X0128	XG.2001.92-2	108-95-2	Phenol	79	% Recovery	1	NA		01/22/0
X0128	XG.2001.92-2	129-00-0	Pyrene	95	% Recovery	1	NA		01/22/0
X0133-014		**SW846 5030A/8021B Purgeable VOCs by GC/PID**							
X0133	XG.2001.108-10	71-43-2	Benzene	104	% Recovery	1	NA		01/24/0
X0133	XG.2001.108-10	100-41-4	Ethylbenzene	106	% Recovery	1	NA		01/24/0
X0133	XG.2001.108-10	95-47-6	o-Xylene	105	% Recovery	1	NA		01/24/0
X0133	XG.2001.108-10	108-38-3/106-42	p/m-Xylenes	107	% Recovery	1	NA		01/24/0
X0133	XG.2001.108-10	108-88-3	Toluene	105	% Recovery	1	NA		01/24/0
X018-005		**SW846 ME/8015A Diesel Range Organics by GC/FID**							
X018	XG.2001.41-5		Diesel Range Organics	73	% Recovery	10	NA		01/09/0

OC Type **MSD: Matrix Spike Duplicate Accuracy** QC Matrix **SOLID**

QC Group	Run Sequence	CAS #	Analyte	Result	Units	Dilution Factor	Detection Limit	Code	Run Date
X0114-013		**SW846 5030A/8015A GRO by GC/FID**							
X0114	XG.2001.56-4		Gasoline Range Organics	112	% Recovery	10	NA		01/10/01
X0127-004		**SW846 8260A Purgeable VOCs by GC/MS**							
X0127	XG.2001.69-4	75-34-3	1,1 Dichloroethene	113	% Recovery	1	NA		01/18

Client: CH2MHILL

Project: 0101252 160660.02.FF.SA

Explanation of codes

D *Not applicable due to sample dilution*

L *Not applicable due to MDL proximity*

X0127	XG.2001.69-4	106-46-7	1,4 Dichlorobenzene	103	% Recovery	1	NA		01/18/01
X0127	XG.2001.69-4	71-43-2	Benzene	116	% Recovery	1	NA		01/18/01
X0127	XG.2001.69-4	108-90-7	Chlorobenzene	110	% Recovery	1	NA		01/18/01
X0127	XG.2001.69-4	108-88-3	Toluene	116	% Recovery	1	NA		01/18/01
X0127	XG.2001.69-4	79-01-6	Trichloroethene	108	% Recovery	1	NA		01/18/01
X0128-006		**SW846 3550A/8270B SVOCs by GC/MS**							
X0128	XG.2001.92-3	120-82-1	1,2,4-Trichlorobenzene	65	% Recovery	1	NA		01/22/01
X0128	XG.2001.92-3	106-46-7	1,4-Dichlorobenzene	68	% Recovery	1	NA		01/22/01
X0128	XG.2001.92-3	121-14-2	2,4-Dinitrotoluene	82	% Recovery	1	NA		01/22/01
X0128	XG.2001.92-3	95-57-8	2-Chlorophenol	76	% Recovery	1	NA		01/22/01
X0128	XG.2001.92-3	59-50-7	4-Chloro-3-methylphenol	85	% Recovery	1	NA		01/22/01
X0128	XG.2001.92-3	100-02-7	4-Nitrophenol	94	% Recovery	1	NA		01/22/01
X0128	XG.2001.92-3	83-32-9	Acenaphthene	89	% Recovery	1	NA		01/22/01
X0128	XG.2001.92-3	117-84-0	di-n-Octylpthalate	79	% Recovery	1	NA		01/22/01
X0128	XG.2001.92-3	621-64-7	n-Nitroso-di-n-propylamine	90	% Recovery	1	NA		01/22/01
X0128	XG.2001.92-3	87-86-5	Pentachlorophenol	92	% Recovery	1	NA		01/22/01
X0128	XG.2001.92-3	108-95-2	Phenol	72	% Recovery	1	NA		01/22/01
X0128	XG.2001.92-3	129-00-0	Pyrene	88	% Recovery	1	NA		01/22/01
X0133-015		**SW846 5030A/8021B Purgeable VOCs by GC/PID**							
X0133	XG.2001.108-11	71-43-2	Benzene	108	% Recovery	1	NA		01/24/01
X0133	XG.2001.108-11	100-41-4	Ethylbenzene	110	% Recovery	1	NA		01/24/01
X0133	XG.2001.108-11	95-47-6	o-Xylene	107	% Recovery	1	NA		01/24/01
	XG.2001.108-11	108-38-3/106-42	p/m-Xylenes	110	% Recovery	1	NA		01/24/01
X0133	XG.2001.108-11	108-88-3	Toluene	109	% Recovery	1	NA		01/24/01
X018-006		**SW846 ME/8015A Diesel Range Organics by GC/FID**							
X018	XG.2001.41-6		Diesel Range Organics	76	% Recovery	10	NA		01/09/01

QC Type **MSD: Matrix Spike Duplicate Precision** QC Matrix **SOLID**

QC Group	Run Sequence	CAS #	Analyte	Result	Units	Dilution Factor	Detection Limit	Code	Run Date
X0114-013		**SW846 5030A/8015A GRO by GC/FID**							
X0114	XG.2001.56-4		Gasoline Range Organics	< 1	RPD	10	NA		01/10/01
X0127-004		**SW846 8260A Purgeable VOCs by GC/MS**							
X0127	XG.2001.69-4	75-34-3	1,1 Dichloroethene	2	RPD	1	NA		01/18/01
X0127	XG.2001.69-4	106-46-7	1,4 Dichlorobenzene	< 1	RPD	1	NA		01/18/01
X0127	XG.2001.69-4	71-43-2	Benzene	1	RPD	1	NA		01/18/01
X0127	XG.2001.69-4	108-90-7	Chlorobenzene	< 1	RPD	1	NA		01/18/01
X0127	XG.2001.69-4	108-88-3	Toluene	< 1	RPD	1	NA		01/18/01
X0127	XG.2001.69-4	79-01-6	Trichloroethene	< 1	RPD	1	NA		01/18/01
X0128-006		**SW846 3550A/8270B SVOCs by GC/MS**							
X0128	XG.2001.92-3	120-82-1	1,2,4-Trichlorobenzene	10	RPD	1	NA		01/22/01
X0128	XG.2001.92-3	106-46-7	1,4-Dichlorobenzene	10	RPD	1	NA		01/22/01
X0128	XG.2001.92-3	121-14-2	2,4-Dinitrotoluene	3	RPD	1	NA		01/22/01
X0128	XG.2001.92-3	95-57-8	2-Chlorophenol	10	RPD	1	NA		01/22/01
X0128	XG.2001.92-3	59-50-7	4-Chloro-3-methylphenol	4	RPD	1	NA		01/22/01

Quality Control Summary

RECEIVED MAR 12 2001

Client: **CH2MHILL**

Project: **0101252** **160660.02.FF.SA**

Explanation of codes

D *Not applicable due to sample dilut*

L *Not applicable due to MDL proximity*

X0128	XG.2001.92-3	100-02-7	4-Nitrophenol	< 1	RPD	1	NA		01/22/0
X0128	XG.2001.92-3	83-32-9	Acenaphthene	5	RPD	1	NA		01/22/0
X0128	XG.2001.92-3	117-84-0	di-n-Octylpthalate	2	RPD	1	NA		01/22/0
X0128	XG.2001.92-3	621-64-7	n-Nitroso-di-n-propylamine	4	RPD	1	NA		01/22/0
X0128	XG.2001.92-3	87-86-5	Pentachlorophenol	2	RPD	1	NA		01/22/0
X0128	XG.2001.92-3	108-95-2	Phenol	9	RPD	1	NA		01/22/0
X0128	XG.2001.92-3	129-00-0	Pyrene	8	RPD	1	NA		01/22/01
X0133-015		**SW846 5030A/8021B Purgeable VOCs by GC/PID**							
X0133	XG.2001.108-11	71-43-2	Benzene	4	RPD	1	NA		01/24/01
X0133	XG.2001.108-11	100-41-4	Ethylbenzene	3	RPD	1	NA		01/24/01
X0133	XG.2001.108-11	95-47-6	o-Xylene	2	RPD	1	NA		01/24/01
X0133	XG.2001.108-11	108-38-3/106-42	p/m-Xylenes	3	RPD	1	NA		01/24/01
X0133	XG.2001.108-11	108-88-3	Toluene	4	RPD	1	NA		01/24/01
X018-006		**SW846 ME/8015A Diesel Range Organics by GC/FID**							
X018	XG.2001.41-6		Diesel Range Organics	5	RPD	10	NA		01/09/01

Assaigai Analytical Laboratories, Inc.

Surrogate Summary: QC

Client: CH2MHILL

Project: 0101252 160660.02.FF.SA

QC Type: **LCS** QC Matrix: **SOLID**

QC Group	Run Sequence	CAS #	Analyte	Result	Units	Dilution Factor	Detection Limit	Code	Run Date
X0114-002		GRO							
X0114	XG.2001.43-2	NA	4-Bromofluorobenzene-FID	106	% Recovery	1	NA		01/09/01
X0114	XG.2001.43-2	NA	4-Bromofluorobenzene-PID	ND	% Recovery	1	NA		01/09/01
X0114	XG.2001.43-2	NA	aaa-Trifluorotoluene-FID	105	% Recovery	1	NA		01/09/01
X0114	XG.2001.43-2	NA	aaa-Trifluorotoluene-PID	ND	% Recovery	1	NA		01/09/01
X0127-005		8260							
X0127	XG.2001.69-5	NA	1,2 Dichloroethane-D4 (SS)	87	% Recovery	1	NA		01/18/01
X0127	XG.2001.69-5	NA	4-Bromofluorobenzene (SS)	96	% Recovery	1	NA		01/18/01
X0127	XG.2001.69-5	NA	Dibromofluoromethane (SS)	101	% Recovery	1	NA		01/18/01
X0127	XG.2001.69-5	NA	Toluene-D8 (SS)	102	% Recovery	1	NA		01/18/01
X0128-002		8270							
X0128	XG.2001.83-2	NA	*2,4,6-TRIBROMOPHENOL	98	% Recovery	1	NA		01/21/01
X0128	XG.2001.83-2	NA	*2-FLUOROBIPHENYL	92	% Recovery	1	NA		01/21/01
X0128	XG.2001.83-2	NA	*2-FLUOROPHENOL	78	% Recovery	1	NA		01/21/01
X0128	XG.2001.83-2	NA	*NITROBENZENE-D5	86	% Recovery	1	NA		01/21/01
[illegible]	XG.2001.83-2	NA	*PHENOL-D6	86	% Recovery	1	NA		01/21/01
[illegible]	XG.2001.83-2	NA	*TERPHENYL-D14	91	% Recovery	1	NA		01/21/01
X0133-001		BTEXALL							
X0133	XG.2001.94-3	NA	4-Bromofluorobenzene	101	% Recovery	1	NA		01/22/01
X0133	XG.2001.94-3	NA	aaa-Trifluorotoluene	99	% Recovery	1	NA		01/22/01
X0133	XG.2001.94-3	NA	Bromochloromethane	ND	% Recovery	1	NA		01/22/01
X0133	XG.2001.94-3	NA	Bromochloropropane	6	% Recovery	1	NA		01/22/01
X0133	XG.2001.94-3	NA	Dichlorobutane	ND	% Recovery	1	NA		01/22/01
X018-002		DRO							
X018	XG.2001.41-2	NA	O-terphenyl	106	% Recovery	1	NA		01/09/01

QC Type: **LCSD** QC Matrix: **SOLID**

QC Group	Run Sequence	CAS #	Analyte	Result	Units	Dilution Factor	Detection Limit	Code	Run Date
X0114-003		GRO							
X0114	XG.2001.43-3	NA	4-Bromofluorobenzene-FID	106	% Recovery	1	NA		01/09/01
X0114	XG.2001.43-3	NA	4-Bromofluorobenzene-PID	ND	% Recovery	1	NA		01/09/01
X0114	XG.2001.43-3	NA	aaa-Trifluorotoluene-FID	105	% Recovery	1	NA		01/09/01
X0114	XG.2001.43-3	NA	aaa-Trifluorotoluene-PID	ND	% Recovery	1	NA		01/09/01
X0127-006		8260							
X0127	XG.2001.69-6	NA	1,2 Dichloroethane-D4 (SS)	91	% Recovery	1	NA		01/18/01
[illegible]7	XG.2001.69-6	NA	4-Bromofluorobenzene (SS)	98	% Recovery	1	NA		01/18/01
[illegible]	XG.2001.69-6	NA	Dibromofluoromethane (SS)	101	% Recovery	1	NA		01/18/01
X0127	XG.2001.69-6	NA	Toluene-D8 (SS)	102	% Recovery	1	NA		01/18/01

Surrogate Summary: QC

Client: **CH2MHILL**

Project: **0101252** **160660.02.FF.SA**

X0128-003		**8270**							
X0128	XG.2001.83-3	NA	*2,4,6-TRIBROMOPHENOL	95	% Recovery	1	NA		01/21/01
X0128	XG.2001.83-3	NA	*2-FLUOROBIPHENYL	86	% Recovery	1	NA		01/21/01
X0128	XG.2001.83-3	NA	*2-FLUOROPHENOL	72	% Recovery	1	NA		01/21/01
X0128	XG.2001.83-3	NA	*NITROBENZENE-D5	81	% Recovery	1	NA		01/21/01
X0128	XG.2001.83-3	NA	*PHENOL-D6	80	% Recovery	1	NA		01/21/01
X0128	XG.2001.83-3	NA	*TERPHENYL-D14	90	% Recovery	1	NA		01/21/01
X0133-002		**BTEXALL**							
X0133	XG.2001.94-4	NA	4-Bromofluorobenzene	102	% Recovery	1	NA		01/22/01
X0133	XG.2001.94-4	NA	aaa-Trifluorotoluene	100	% Recovery	1	NA		01/22/01
X0133	XG.2001.94-4	NA	Bromochloromethane	ND	% Recovery	1	NA		01/22/01
X0133	XG.2001.94-4	NA	Bromochloropropane	7	% Recovery	1	NA		01/22/01
X0133	XG.2001.94-4	NA	Dichlorobutane	ND	% Recovery	1	NA		01/22/01
X018-003		**DRO**							
X018	XG.2001.41-3	NA	O-terphenyl	113	% Recovery	1	NA		01/09/01

QC Type **MB** QC Matrix **SOLID**

QC Group	Run Sequence	CAS #	Analyte	Result	Units	Dilution Factor	Detection Limit	Code	Run Date
X0114-001		**GRO**							
X0114	XG.2001.43-1	NA	4-Bromofluorobenzene-FID	93	% Recovery	1	NA		01/09/01
X0114	XG.2001.43-1	NA	4-Bromofluorobenzene-PID	ND	% Recovery	1	NA		01/09/01
X0114	XG.2001.43-1	NA	aaa-Trifluorotoluene-FID	104	% Recovery	1	NA		01/09/01
X0114	XG.2001.43-1	NA	aaa-Trifluorotoluene-PID	ND	% Recovery	1	NA		01/09/01
X0114-010		**GRO**							
X0114	XG.2001.56-1	NA	4-Bromofluorobenzene-FID	92	% Recovery	1	NA		01/10/01
X0114	XG.2001.56-1	NA	4-Bromofluorobenzene-PID	ND	% Recovery	1	NA		01/10/01
X0114	XG.2001.56-1	NA	aaa-Trifluorotoluene-FID	102	% Recovery	1	NA		01/10/01
X0114	XG.2001.56-1	NA	aaa-Trifluorotoluene-PID	ND	% Recovery	1	NA		01/10/01
X0114-014		**GRO**							
X0114	XG.2001.120-1	NA	4-Bromofluorobenzene-FID	93	% Recovery	1	NA		01/26/01
X0114	XG.2001.120-1	NA	4-Bromofluorobenzene-PID	ND	% Recovery	1	NA		01/26/01
X0114	XG.2001.120-1	NA	aaa-Trifluorotoluene-FID	102	% Recovery	1	NA		01/26/01
X0114	XG.2001.120-1	NA	aaa-Trifluorotoluene-PID	ND	% Recovery	1	NA		01/26/01
X0114-018		**GRO**							
X0114	XG.2001.129-1	NA	4-Bromofluorobenzene-FID	89	% Recovery	1	NA		01/30/01
X0114	XG.2001.129-1	NA	4-Bromofluorobenzene-PID	ND	% Recovery	1	NA		01/30/01
X0114	XG.2001.129-1	NA	aaa-Trifluorotoluene-FID	101	% Recovery	1	NA		01/30/01
X0114	XG.2001.129-1	NA	aaa-Trifluorotoluene-PID	ND	% Recovery	1	NA		01/30/01
X0114-026		**GRO**							
X0114	XG.2001.149-1	NA	4-Bromofluorobenzene-FID	87	% Recovery	1	NA		02/01/01
X0114	XG.2001.149-1	NA	4-Bromofluorobenzene-PID	ND	% Recovery	1	NA		02/01/01
X0114	XG.2001.149-1	NA	aaa-Trifluorotoluene-FID	102	% Recovery	1	NA		02/01/01
X0114	XG.2001.149-1	NA	aaa-Trifluorotoluene-PID	ND	% Recovery	1	NA		02/01/01

Surrogate Summary: QC

Client: CH2MHILL

Project: 0101252 160660.02.FF.SA

X0114-029		GRO						
X0114	XG.2001.168-1	NA	4-Bromofluorobenzene-FID	86	% Recovery	1	NA	02/07/01
X0114	XG.2001.168-1	NA	4-Bromofluorobenzene-PID	ND	% Recovery	1	NA	02/07/01
X0114	XG.2001.168-1	NA	aaa-Trifluorotoluene-FID	101	% Recovery	1	NA	02/07/01
X0114	XG.2001.168-1	NA	aaa-Trifluorotoluene-PID	ND	% Recovery	1	NA	02/07/01
X0127-001		8260						
X0127	XG.2001.69-1	NA	1,2 Dichloroethane-D4 (SS)	85	% Recovery	1	NA	01/18/01
X0127	XG.2001.69-1	NA	4-Bromofluorobenzene (SS)	96	% Recovery	1	NA	01/18/01
X0127	XG.2001.69-1	NA	Dibromofluoromethane (SS)	98	% Recovery	1	NA	01/18/01
X0127	XG.2001.69-1	NA	Toluene-D8 (SS)	100	% Recovery	1	NA	01/18/01
X0127-011		8260						
X0127	XG.2001.80-1	NA	1,2 Dichloroethane-D4 (SS)	96	% Recovery	1	NA	01/22/01
X0127	XG.2001.80-1	NA	4-Bromofluorobenzene (SS)	100	% Recovery	1	NA	01/22/01
X0127	XG.2001.80-1	NA	Dibromofluoromethane (SS)	103	% Recovery	1	NA	01/22/01
X0127	XG.2001.80-1	NA	Toluene-D8 (SS)	101	% Recovery	1	NA	01/22/01
X0127-014		8260						
X0127	XG.2001.80-3	NA	1,2 Dichloroethane-D4 (SS)	95	% Recovery	1	NA	01/22/01
X0127	XG.2001.80-3	NA	4-Bromofluorobenzene (SS)	97	% Recovery	1	NA	01/22/01
X0127	XG.2001.80-3	NA	Dibromofluoromethane (SS)	102	% Recovery	1	NA	01/22/01
X0127	XG.2001.80-3	NA	Toluene-D8 (SS)	102	% Recovery	1	NA	01/22/01
X0127-016		8260						
	XG.2001.117-1	NA	1,2 Dichloroethane-D4 (SS)	99	% Recovery	1	NA	01/25/01
X0127	XG.2001.117-1	NA	4-Bromofluorobenzene (SS)	98	% Recovery	1	NA	01/25/01
X0127	XG.2001.117-1	NA	Dibromofluoromethane (SS)	102	% Recovery	1	NA	01/25/01
X0127	XG.2001.117-1	NA	Toluene-D8 (SS)	103	% Recovery	1	NA	01/25/01
X0127-019		8260						
X0127	XG.2001.124-1	NA	1,2 Dichloroethane-D4 (SS)	94	% Recovery	1	NA	01/29/01
X0127	XG.2001.124-1	NA	4-Bromofluorobenzene (SS)	97	% Recovery	1	NA	01/29/01
X0127	XG.2001.124-1	NA	Dibromofluoromethane (SS)	102	% Recovery	1	NA	01/29/01
X0127	XG.2001.124-1	NA	Toluene-D8 (SS)	100	% Recovery	1	NA	01/29/01
X0127-021		8260						
X0127	XG.2001.132-1	NA	1,2 Dichloroethane-D4 (SS)	89	% Recovery	1	NA	01/30/01
X0127	XG.2001.132-1	NA	4-Bromofluorobenzene (SS)	98	% Recovery	1	NA	01/30/01
X0127	XG.2001.132-1	NA	Dibromofluoromethane (SS)	101	% Recovery	1	NA	01/30/01
X0127	XG.2001.132-1	NA	Toluene-D8 (SS)	100	% Recovery	1	NA	01/30/01
X0127-024		8260						
X0127	XG.2001.157-2	NA	1,2 Dichloroethane-D4 (SS)	94	% Recovery	1	NA	02/01/01
X0127	XG.2001.157-2	NA	4-Bromofluorobenzene (SS)	98	% Recovery	1	NA	02/01/01
X0127	XG.2001.157-2	NA	Dibromofluoromethane (SS)	101	% Recovery	1	NA	02/01/01
X0127	XG.2001.157-2	NA	Toluene-D8 (SS)	100	% Recovery	1	NA	02/01/01
X0127-028		8260						
X0127	XG.2001.157-5	NA	1,2 Dichloroethane-D4 (SS)	97	% Recovery	1	NA	02/02/01
X0127	XG.2001.157-5	NA	4-Bromofluorobenzene (SS)	98	% Recovery	1	NA	02/02/01
X0127	XG.2001.157-5	NA	Dibromofluoromethane (SS)	101	% Recovery	1	NA	02/02/01
[illegible]	XG.2001.157-5	NA	Toluene-D8 (SS)	102	% Recovery	1	NA	02/02/01

Surrogate Summary: QC

Client: **CH2MHILL**

Project: **0101252** **160660.02.FF.SA**

X0127-030		**8260**						
X0127	XG.2001.198-1	NA	1,2 Dichloroethane-D4 (SS)	91	% Recovery	1	NA	02/09/0
X0127	XG.2001.198-1	NA	4-Bromofluorobenzene (SS)	99	% Recovery	1	NA	02/09/0
X0127	XG.2001.198-1	NA	Dibromofluoromethane (SS)	98	% Recovery	1	NA	02/09/0
X0127	XG.2001.198-1	NA	Toluene-D8 (SS)	100	% Recovery	1	NA	02/09/0
X0127-039		**8260**						
X0127	XG.2001.198-9	NA	1,2 Dichloroethane-D4 (SS)	97	% Recovery	1	NA	02/13/0
X0127	XG.2001.198-9	NA	4-Bromofluorobenzene (SS)	101	% Recovery	1	NA	02/13/0
X0127	XG.2001.198-9	NA	Dibromofluoromethane (SS)	100	% Recovery	1	NA	02/13/0
X0127	XG.2001.198-9	NA	Toluene-D8 (SS)	100	% Recovery	1	NA	02/13/0
X0128-001		**8270**						
X0128	XG.2001.83-1	NA	*2,4,6-TRIBROMOPHENOL	97	% Recovery	1	NA	01/21/0
X0128	XG.2001.83-1	NA	*2-FLUOROBIPHENYL	89	% Recovery	1	NA	01/21/0
X0128	XG.2001.83-1	NA	*2-FLUOROPHENOL	76	% Recovery	1	NA	01/21/0
X0128	XG.2001.83-1	NA	*NITROBENZENE-D5	84	% Recovery	1	NA	01/21/0
X0128	XG.2001.83-1	NA	*PHENOL-D6	85	% Recovery	1	NA	01/21/0
X0128	XG.2001.83-1	NA	*TERPHENYL-D14	92	% Recovery	1	NA	01/21/0
X0128-011		**8270**						
X0128	XG.2001.274-1	NA	*2,4,6-TRIBROMOPHENOL	92	% Recovery	1	NA	01/30/0
X0128	XG.2001.274-1	NA	*2-FLUOROBIPHENYL	87	% Recovery	1	NA	01/30/0
X0128	XG.2001.274-1	NA	*2-FLUOROPHENOL	76	% Recovery	1	NA	01/30/0
X0128	XG.2001.274-1	NA	*NITROBENZENE-D5	83	% Recovery	1	NA	01/30/
X0128	XG.2001.274-1	NA	*PHENOL-D6	86	% Recovery	1	NA	01/30/
X0128	XG.2001.274-1	NA	*TERPHENYL-D14	93	% Recovery	1	NA	01/30/0
X0128-014		**8270**						
X0128	XG.2001.162-1	NA	*2,4,6-TRIBROMOPHENOL	96	% Recovery	1	NA	02/05/0
X0128	XG.2001.162-1	NA	*2-FLUOROBIPHENYL	92	% Recovery	1	NA	02/05/0
X0128	XG.2001.162-1	NA	*2-FLUOROPHENOL	77	% Recovery	1	NA	02/05/0
X0128	XG.2001.162-1	NA	*NITROBENZENE-D5	86	% Recovery	1	NA	02/05/0
X0128	XG.2001.162-1	NA	*PHENOL-D6	89	% Recovery	1	NA	02/05/0
X0128	XG.2001.162-1	NA	*TERPHENYL-D14	92	% Recovery	1	NA	02/05/0
X0128-016		**8270**						
X0128	XG.2001.189-2	NA	*2,4,6-TRIBROMOPHENOL	92	% Recovery	1	NA	02/09/0
X0128	XG.2001.189-2	NA	*2-FLUOROBIPHENYL	86	% Recovery	1	NA	02/09/0
X0128	XG.2001.189-2	NA	*2-FLUOROPHENOL	74	% Recovery	1	NA	02/09/0
X0128	XG.2001.189-2	NA	*NITROBENZENE-D5	81	% Recovery	1	NA	02/09/0
X0128	XG.2001.189-2	NA	*PHENOL-D6	84	% Recovery	1	NA	02/09/0
X0128	XG.2001.189-2	NA	*TERPHENYL-D14	88	% Recovery	1	NA	02/09/0
X0128-018		**8270**						
X0128	XG.2001.201-1	NA	*2,4,6-TRIBROMOPHENOL	68	% Recovery	1	NA	02/13/0
X0128	XG.2001.201-1	NA	*2-FLUOROBIPHENYL	65	% Recovery	1	NA	02/13/0
X0128	XG.2001.201-1	NA	*2-FLUOROPHENOL	56	% Recovery	1	NA	02/13/0
X0128	XG.2001.201-1	NA	*NITROBENZENE-D5	62	% Recovery	1	NA	02/13/0
X0128	XG.2001.201-1	NA	*PHENOL-D6	63	% Recovery	1	NA	02/13/0
X0128	XG.2001.201-1	NA	*TERPHENYL-D14	90	% Recovery	1	NA	02/13/0
X0133-003		**BTEXALL**						
X0133	XG.2001.94-5	NA	4-Bromofluorobenzene	103	% Recovery	1	NA	01/22/0

Surrogate Summary: QC

Client: CH2MHILL

Project: 0101252 160660.02.FF.SA

X0133	XG.2001.94-5	NA	aaa-Trifluorotoluene	99	% Recovery	1	NA	01/22/01
X0133	XG.2001.94-5	NA	Bromochloromethane	ND	% Recovery	1	NA	01/22/01
X0133	XG.2001.94-5	NA	Bromochloropropane	6	% Recovery	1	NA	01/22/01
X0133	XG.2001.94-5	NA	Dichlorobutane	ND	% Recovery	1	NA	01/22/01
X0133-004		BTEXALL						
X0133	XG.2001.98-7	NA	4-Bromofluorobenzene	103	% Recovery	1	NA	01/23/01
X0133	XG.2001.98-7	NA	aaa-Trifluorotoluene	101	% Recovery	1	NA	01/23/01
X0133	XG.2001.98-7	NA	Bromochloromethane	ND	% Recovery	1	NA	01/23/01
X0133	XG.2001.98-7	NA	Bromochloropropane	6	% Recovery	1	NA	01/23/01
X0133	XG.2001.98-7	NA	Dichlorobutane	ND	% Recovery	1	NA	01/23/01
X0133-009		BTEXALL						
X0133	XG.2001.108-5	NA	4-Bromofluorobenzene	101	% Recovery	1	NA	01/24/01
X0133	XG.2001.108-5	NA	aaa-Trifluorotoluene	101	% Recovery	1	NA	01/24/01
X0133	XG.2001.108-5	NA	Bromochloromethane	ND	% Recovery	1	NA	01/24/01
X0133	XG.2001.108-5	NA	Bromochloropropane	6	% Recovery	1	NA	01/24/01
X0133	XG.2001.108-5	NA	Dichlorobutane	ND	% Recovery	1	NA	01/24/01
X0133-016		BTEXALL						
X0133	XG.2001.123-13	NA	4-Bromofluorobenzene	101	% Recovery	1	NA	01/26/01
X0133	XG.2001.123-13	NA	aaa-Trifluorotoluene	101	% Recovery	1	NA	01/26/01
X0133	XG.2001.123-13	NA	Bromochloromethane	ND	% Recovery	1	NA	01/26/01
X0133	XG.2001.123-13	NA	Bromochloropropane	6	% Recovery	1	NA	01/26/01
X0133	XG.2001.123-13	NA	Dichlorobutane	ND	% Recovery	1	NA	01/26/01
X0133-018		BTEXALL						
X0133	XG.2001.134-1	NA	4-Bromofluorobenzene	99	% Recovery	1	NA	01/30/01
X0133	XG.2001.134-1	NA	aaa-Trifluorotoluene	103	% Recovery	1	NA	01/30/01
X0133	XG.2001.134-1	NA	Bromochloromethane	ND	% Recovery	1	NA	01/30/01
X0133	XG.2001.134-1	NA	Bromochloropropane	6	% Recovery	1	NA	01/30/01
X0133	XG.2001.134-1	NA	Dichlorobutane	ND	% Recovery	1	NA	01/30/01
X0133-025		BTEXALL						
X0133	XG.2001.139-1	NA	4-Bromofluorobenzene	98	% Recovery	1	NA	01/31/01
X0133	XG.2001.139-1	NA	aaa-Trifluorotoluene	102	% Recovery	1	NA	01/31/01
X0133	XG.2001.139-1	NA	Bromochloromethane	ND	% Recovery	1	NA	01/31/01
X0133	XG.2001.139-1	NA	Bromochloropropane	6	% Recovery	1	NA	01/31/01
X0133	XG.2001.139-1	NA	Dichlorobutane	ND	% Recovery	1	NA	01/31/01
X0133-034		BTEXALL						
X0133	XG.2001.150-8	NA	4-Bromofluorobenzene	99	% Recovery	1	NA	02/01/01
X0133	XG.2001.150-8	NA	aaa-Trifluorotoluene	101	% Recovery	1	NA	02/01/01
X0133	XG.2001.150-8	NA	Bromochloromethane	ND	% Recovery	1	NA	02/01/01
X0133	XG.2001.150-8	NA	Bromochloropropane	6	% Recovery	1	NA	02/01/01
X0133	XG.2001.150-8	NA	Dichlorobutane	ND	% Recovery	1	NA	02/01/01
X0133-039		BTEXALL						
X0133	XG.2001.178-6	NA	4-Bromofluorobenzene	101	% Recovery	1	NA	02/08/01
X0133	XG.2001.178-6	NA	aaa-Trifluorotoluene	101	% Recovery	1	NA	02/08/01
X0133	XG.2001.178-6	NA	Bromochloromethane	ND	% Recovery	1	NA	02/08/01
X0133	XG.2001.178-6	NA	Bromochloropropane	6	% Recovery	1	NA	02/08/01
[illegible]	XG.2001.178-6	NA	Dichlorobutane	ND	% Recovery	1	NA	02/08/01

Surrogate Summary: QC

Client: **CH2MHILL**

Project: **0101252** **160660.02.FF.SA**

X0133-041		BTEXALL							
X0133	XG.2001.191-1	NA	4-Bromofluorobenzene	100	% Recovery	1	NA		02/12/01
X0133	XG.2001.191-1	NA	aaa-Trifluorotoluene	102	% Recovery	1	NA		02/12/01
X0133	XG.2001.191-1	NA	Bromochloromethane	ND	% Recovery	1	NA		02/12/01
X0133	XG.2001.191-1	NA	Bromochloropropane	6	% Recovery	1	NA		02/12/01
X0133	XG.2001.191-1	NA	Dichlorobutane	ND	% Recovery	1	NA		02/12/01
X018-001		DRO							
X018	XG.2001.41-1	NA	O-terphenyl	96	% Recovery	1	NA		01/09/01
X018-010		DRO							
X018	XG.2001.121-1	NA	O-terphenyl	99	% Recovery	1	NA		01/26/01
X018-016		DRO							
X018	XG.2001.130-1	NA	O-terphenyl	87	% Recovery	1	NA		01/30/01
X018-023		DRO							
X018	XG.2001.148-1	NA	O-terphenyl	88	% Recovery	1	NA		02/01/01
X018-026		DRO							
X018	XG.2001.153-1	NA	O-terphenyl	91	% Recovery	1	NA		02/02/01

QC Type **MS** QC Matrix **SOLID**

QC Group	Run Sequence	CAS #	Analyte	Result	Units	Dilution Factor	Detection Limit	Code	Run Date
X0114-012		GRO							
X0114	XG.2001.56-3	NA	4-Bromofluorobenzene-FID	105	% Recovery	10	NA		01/10/01
X0114	XG.2001.56-3	NA	4-Bromofluorobenzene-PID	ND	% Recovery	10	NA		01/10/01
X0114	XG.2001.56-3	NA	aaa-Trifluorotoluene-FID	106	% Recovery	10	NA		01/10/01
X0114	XG.2001.56-3	NA	aaa-Trifluorotoluene-PID	ND	% Recovery	10	NA		01/10/01
X0127-003		8260							
X0127	XG.2001.69-3	NA	1,2 Dichloroethane-D4 (SS)	93	% Recovery	1	NA		01/18/01
X0127	XG.2001.69-3	NA	4-Bromofluorobenzene (SS)	92	% Recovery	1	NA		01/18/01
X0127	XG.2001.69-3	NA	Dibromofluoromethane (SS)	103	% Recovery	1	NA		01/18/01
X0127	XG.2001.69-3	NA	Toluene-D8 (SS)	96	% Recovery	1	NA		01/18/01
X0128-005		8270							
X0128	XG.2001.92-2	NA	*2,4,6-TRIBROMOPHENOL	101	% Recovery	1	NA		01/22/01
X0128	XG.2001.92-2	NA	*2-FLUOROBIPHENYL	93	% Recovery	1	NA		01/22/01
X0128	XG.2001.92-2	NA	*2-FLUOROPHENOL	76	% Recovery	1	NA		01/22/01
X0128	XG.2001.92-2	NA	*NITROBENZENE-D5	89	% Recovery	1	NA		01/22/01
X0128	XG.2001.92-2	NA	*PHENOL-D6	86	% Recovery	1	NA		01/22/01
X0128	XG.2001.92-2	NA	*TERPHENYL-D14	96	% Recovery	1	NA		01/22/01
X0133-014		BTEXALL							
X0133	XG.2001.108-10	NA	4-Bromofluorobenzene	102	% Recovery	1	NA		01/24/01
X0133	XG.2001.108-10	NA	aaa-Trifluorotoluene	99	% Recovery	1	NA		01/24/01
X0133	XG.2001.108-10	NA	Bromochloromethane	ND	% Recovery	1	NA		01/24/01
X0133	XG.2001.108-10	NA	Bromochloropropane	6	% Recovery	1	NA		01/24/01
X0133	XG.2001.108-10	NA	Dichlorobutane	ND	% Recovery	1	NA		01/24/01

Surrogate Summary: QC

Client: CH2MHILL

Project: 0101252 160660.02.FF.SA

X018-005		DRO							
X018	XG.2001.41-5	NA	O-terphenyl	138	% Recovery	10	NA		01/09/01

QC Type **MSD** QC Matrix **SOLID**

QC Group	Run Sequence	CAS #	Analyte	Result	Units	Dilution Factor	Detection Limit	Code	Run Date
X0114-013		GRO							
X0114	XG.2001.56-4	NA	4-Bromofluorobenzene-FID	106	% Recovery	10	NA		01/10/01
X0114	XG.2001.56-4	NA	4-Bromofluorobenzene-PID	ND	% Recovery	10	NA		01/10/01
X0114	XG.2001.56-4	NA	aaa-Trifluorotoluene-FID	107	% Recovery	10	NA		01/10/01
X0114	XG.2001.56-4	NA	aaa-Trifluorotoluene-PID	ND	% Recovery	10	NA		01/10/01
X0127-004		8260							
X0127	XG.2001.69-4	NA	1,2 Dichloroethane-D4 (SS)	94	% Recovery	1	NA		01/18/01
X0127	XG.2001.69-4	NA	4-Bromofluorobenzene (SS)	93	% Recovery	1	NA		01/18/01
X0127	XG.2001.69-4	NA	Dibromofluoromethane (SS)	104	% Recovery	1	NA		01/18/01
X0127	XG.2001.69-4	NA	Toluene-D8 (SS)	96	% Recovery	1	NA		01/18/01
X0128-006		8270							
X0128	XG.2001.92-3	NA	*2,4,6-TRIBROMOPHENOL	96	% Recovery	1	NA		01/22/01
X0128	XG.2001.92-3	NA	*2-FLUOROBIPHENYL	85	% Recovery	1	NA		01/22/01
	XG.2001.92-3	NA	*2-FLUOROPHENOL	67	% Recovery	1	NA		01/22/01
X0128	XG.2001.92-3	NA	*NITROBENZENE-D5	79	% Recovery	1	NA		01/22/01
X0128	XG.2001.92-3	NA	*PHENOL-D6	78	% Recovery	1	NA		01/22/01
X0128	XG.2001.92-3	NA	*TERPHENYL-D14	89	% Recovery	1	NA		01/22/01
X0133-015		BTEXALL							
X0133	XG.2001.108-11	NA	4-Bromofluorobenzene	101	% Recovery	1	NA		01/24/01
X0133	XG.2001.108-11	NA	aaa-Trifluorotoluene	101	% Recovery	1	NA		01/24/01
X0133	XG.2001.108-11	NA	Bromochloromethane	ND	% Recovery	1	NA		01/24/01
X0133	XG.2001.108-11	NA	Bromochloropropane	6	% Recovery	1	NA		01/24/01
X0133	XG.2001.108-11	NA	Dichlorobutane	ND	% Recovery	1	NA		01/24/01
X018-006		DRO							
X018	XG.2001.41-6	NA	O-terphenyl	138	% Recovery	10	NA		01/09/01

Surrogate Summary: Fraction

Client: CH2MHILL
Project: 0101252 160660.02.FF.SA

Client Sample ID: **ST-106 SB30 220'** Sample Matrix: **SOIL**

QC Group	Run Sequence	CAS #	Analyte	Result	Units	Dilution Factor	Detection Limit	Code	Run Date
0101252-01A		GRO							X0114-019
X0114	XG.2001.129-2	NA	4-Bromofluorobenzene-FID	92	% Recovery	1	NA		01/30/01
X0114	XG.2001.129-2	NA	4-Bromofluorobenzene-PID	ND	% Recovery	1	NA		01/30/01
X0114	XG.2001.129-2	NA	aaa-Trifluorotoluene-FID	103	% Recovery	1	NA		01/30/01
X0114	XG.2001.129-2	NA	aaa-Trifluorotoluene-PID	ND	% Recovery	1	NA		01/30/01
0101252-01B		DRO							X018-017
X018	XG.2001.130-2	NA	O-terphenyl	84	% Recovery	1	NA		01/30/01
0101252-01C		8260							X0127-022
X0127	XG.2001.132-2	NA	1,2 Dichloroethane-D4 (SS)	96	% Recovery	1	NA		01/30/01
X0127	XG.2001.132-2	NA	4-Bromofluorobenzene (SS)	98	% Recovery	1	NA		01/30/01
X0127	XG.2001.132-2	NA	Dibromofluoromethane (SS)	101	% Recovery	1	NA		01/30/01
X0127	XG.2001.132-2	NA	Toluene-D8 (SS)	101	% Recovery	1	NA		01/30/01
0101252-01C		8260							X0127-026
X0127	XG.2001.157-3	NA	1,2 Dichloroethane-D4 (SS)	94	% Recovery	1	NA		02/01/01
X0127	XG.2001.157-3	NA	4-Bromofluorobenzene (SS)	98	% Recovery	1	NA		02/01/01
	XG.2001.157-3	NA	Dibromofluoromethane (SS)	101	% Recovery	1	NA		02/01/01
X0127	XG.2001.157-3	NA	Toluene-D8 (SS)	101	% Recovery	1	NA		02/01/01
0101252-01D		8270							X0128-012
X0128	XG.2001.274-2	NA	*2,4,6-TRIBROMOPHENOL	93	% Recovery	1	NA		01/30/01
X0128	XG.2001.274-2	NA	*2-FLUOROBIPHENYL	89	% Recovery	1	NA		01/30/01
X0128	XG.2001.274-2	NA	*2-FLUOROPHENOL	77	% Recovery	1	NA		01/30/01
X0128	XG.2001.274-2	NA	*NITROBENZENE-D5	84	% Recovery	1	NA		01/30/01
X0128	XG.2001.274-2	NA	*PHENOL-D6	86	% Recovery	1	NA		01/30/01
X0128	XG.2001.274-2	NA	*TERPHENYL-D14	93	% Recovery	1	NA		01/30/01

Client Sample ID: **ST-106 SB30 250'** Sample Matrix: **SOIL**

QC Group	Run Sequence	CAS #	Analyte	Result	Units	Dilution Factor	Detection Limit	Code	Run Date
0101252-02A		GRO							X0114-020
X0114	XG.2001.129-3	NA	4-Bromofluorobenzene-FID	115	% Recovery	1	NA		01/30/01
X0114	XG.2001.129-3	NA	4-Bromofluorobenzene-PID	ND	% Recovery	1	NA		01/30/01
X0114	XG.2001.129-3	NA	aaa-Trifluorotoluene-FID	92	% Recovery	1	NA		01/30/01
X0114	XG.2001.129-3	NA	aaa-Trifluorotoluene-PID	80	% Recovery	1	NA		01/30/01
0101252-02B		DRO							X018-018
X018	XG.2001.130-3	NA	O-terphenyl	86	% Recovery	1	NA		01/30/01
0101252-02C		BTEXALL							X0133-038
[illegible]	XG.2001.150-11	NA	4-Bromofluorobenzene	100	% Recovery	10	NA		02/01/01
[illegible]03	XG.2001.150-11	NA	aaa-Trifluorotoluene	102	% Recovery	10	NA		02/01/01

Surrogate Summary: Fraction

Client: **CH2MHILL**

Project: **0101252** **160660.02.FF.SA**

X0133	XG.2001.150-11	NA	Bromochloromethane	ND	% Recovery	10	NA		02/01/0 1
X0133	XG.2001.150-11	NA	Bromochloropropane	6	% Recovery	10	NA		02/01/0 1
X0133	XG.2001.150-11	NA	Dichlorobutane	ND	% Recovery	10	NA		02/01/0 1

Client Sample ID **ST-106 SB30 270'** Sample Matrix **SOIL**

QC Group	Run Sequence	CAS #	Analyte	Result	Units	Dilution Factor	Detection Limit	Code	Run Date
0101252-03A		GRO							X0114-021
X0114	XG.2001.129-4	NA	4-Bromofluorobenzene-FID	104	% Recovery	1	NA		01/30/0 1
X0114	XG.2001.129-4	NA	4-Bromofluorobenzene-PID	ND	% Recovery	1	NA		01/30/0 1
X0114	XG.2001.129-4	NA	aaa-Trifluorotoluene-FID	111	% Recovery	1	NA		01/30/0 1
X0114	XG.2001.129-4	NA	aaa-Trifluorotoluene-PID	ND	% Recovery	1	NA		01/30/0 1
0101252-03B		DRO							X018-019
X018	XG.2001.130-4	NA	O-terphenyl	90	% Recovery	1	NA		01/30/0 1
0101252-03C		8260							X0127-023
X0127	XG.2001.132-3	NA	1,2 Dichloroethane-D4 (SS)	96	% Recovery	1	NA		01/30/0 1
X0127	XG.2001.132-3	NA	4-Bromofluorobenzene (SS)	100	% Recovery	1	NA		01/30/0 1
X0127	XG.2001.132-3	NA	Dibromofluoromethane (SS)	102	% Recovery	1	NA		01/30/0 1
X0127	XG.2001.132-3	NA	Toluene-D8 (SS)	102	% Recovery	1	NA		01/30/0 1
0101252-03C		8260							X012
X0127	XG.2001.157-1	NA	1,2 Dichloroethane-D4 (SS)	96	% Recovery	1	NA		02/01/0 1
X0127	XG.2001.157-1	NA	4-Bromofluorobenzene (SS)	99	% Recovery	1	NA		02/01/0 1
X0127	XG.2001.157-1	NA	Dibromofluoromethane (SS)	102	% Recovery	1	NA		02/01/0 1
X0127	XG.2001.157-1	NA	Toluene-D8 (SS)	101	% Recovery	1	NA		02/01/0 1
0101252-03D		8270							X0128-013
X0128	XG.2001.274-3	NA	*2,4,6-TRIBROMOPHENOL	99	% Recovery	1	NA		01/30/0 1
X0128	XG.2001.274-3	NA	*2-FLUOROBIPHENYL	92	% Recovery	1	NA		01/30/0 1
X0128	XG.2001.274-3	NA	*2-FLUOROPHENOL	69	% Recovery	1	NA		01/30/0 1
X0128	XG.2001.274-3	NA	*NITROBENZENE-D5	80	% Recovery	1	NA		01/30/0 1
X0128	XG.2001.274-3	NA	*PHENOL-D6	80	% Recovery	1	NA		01/30/0 1
X0128	XG.2001.274-3	NA	*TERPHENYL-D14	88	% Recovery	1	NA		01/30/0 1

Client Sample ID **ST-106 SB30 300'** Sample Matrix **SOIL**

QC Group	Run Sequence	CAS #	Analyte	Result	Units	Dilution Factor	Detection Limit	Code	Run Date
0101252-04A		GRO							X0114-022
X0114	XG.2001.129-5	NA	4-Bromofluorobenzene-FID	99	% Recovery	1	NA		01/30 1
X0114	XG.2001.129-5	NA	4-Bromofluorobenzene-PID	ND	% Recovery	1	NA		01/30 1
X0114	XG.2001.129-5	NA	aaa-Trifluorotoluene-FID	110	% Recovery	1	NA		01/30 1
X0114	XG.2001.129-5	NA	aaa-Trifluorotoluene-PID	ND	% Recovery	1	NA		01/30 1
0101252-04B		DRO							X018
X018	XG.2001.130-5	NA	O-terphenyl	107	% Recovery	1	NA		01/30

Surrogate Summary: Fraction

MAR 12 2001

Client: CH2MHILL

Project: 0101252 160660.02.FF.SA

0101252-04C		BTEXALL							X0133-033
X0133	XG.2001.150-5	NA	4-Bromofluorobenzene	103	% Recovery	1	NA		01/31/01
X0133	XG.2001.150-5	NA	aaa-Trifluorotoluene	104	% Recovery	1	NA		01/31/01
X0133	XG.2001.150-5	NA	Bromochloromethane	ND	% Recovery	1	NA		01/31/01
X0133	XG.2001.150-5	NA	Bromochloropropane	6	% Recovery	1	NA		01/31/01
X0133	XG.2001.150-5	NA	Dichlorobutane	ND	% Recovery	1	NA		01/31/01

ASSAIGAI ANALYTICAL LABORATORIES, INC.

Chain of Custody Record

7300 JEFFERSON N.E.
ALBUQUERQUE, NEW MEXICO 87109
(505) 345-8964

3332 WEDGEWOOD
EL PASO, TEXAS 79925
(915) 593-6000

127 EASTGATE DRIVE, 212-C
LOS ALAMOS, NEW MEXICO 87544
(505) 662-2558

Lab job No. 0101252 Date 1-29-1

Page 1 of 1

Client CH2M HILL

Address 6001 INDIAN SCHOOL RD #350

City / State / Zip ALBQ NM 87110

Project Name / Number KAFB/TOD/ Bulkfuels

Contract / Purchase Order / Quote

Project Manager / Contact LeFevre/M.u.nak

Telephone No. 884 5600

Fax No. 883-7507

Samplers : (signature)

AAL Fraction Number	Field Sample Number / Location	Date	Time	Sample Type	Type / Size of Container	Preservation Temp.	Preservation Chemical	No. of Containers	GRO + DRO	BTEX	VOC	SVOC						Remarks
MLCD	ST-106 5030 200	1-26	1600	Soil	4 oz	ICE	–	4	X		X	X						[illegible]
MADC	ST 106 5030 250	1-29	1025	Soil	4 oz	ICE	–	3	X	X								[illegible]
MLCD	ST 106 5030 270	1-29	1235	Soil	4 oz	ICE	–	4	X		X	X						
MADC	ST 106 5030 300	1-29	1535	Soil	4 oz	ICE	–	3	X	X								

RECEIVED MAR 1 2 2001

Relinquished by:	Date	Received by:	Relinquished by:	Date	Received by:
Signature	1-29	Signature	Signature		Signature
Printed	Time	Printed	Printed	Time	Printed
Company CH2M HILL		Company	Company		Company
Reason		Reason	Reason		Reason

Method of Shipment:

Shipment No.

Special Instructions:

Comments:

After analysis, samples are to be:

- ❑ Disposed of (additional fee)
- ❑ Stored (30 days max)
- ❑ Stored over 30 days (additional fee)
- ❑ Returned to customer

ASSAIGAI
ANALYTICAL
LABORATORIES, INC.
7300 Jefferson, NE • Albuquerque, New Mexico 87109 • (505) 345-8964 • FAX (505) 345-7259
3332 Wedgewood Dr., Suite N • El Paso, Texas 79925 • (915) 593-6000 • FAX (915) 593-7820
127 Eastgate Drive, 212-C • Los Alamos, New Mexico 87544 • (505) 662-255

RECEIVED FEB 0 5 2001

Explanation of codes

B	*analyte detected in Method Blank*
E	*result is estimated*
H	*analyzed out of hold time*
N	*tentatively identified compound*
S	*subcontracted*
1-9	*see footnote*

CH2MHILL
attn: **AMY HALLORAN**
6001 INDIAN SCHOOL RD NE STE 350
ALBUQUERQUE, NM 87110-4140

Assaigai Analytical Laboratories, Inc.

Certificate of Analysis

Client: **CH2MHILL**
Project: **0102006** **160660.02.FF.SA**

William P. Biava: President of Assaigai Analytical Laboratories, Inc.

Client Sample ID ***ST106 SB30 310'*** Sample Matrix ***SOIL*** Sample Collected ***01/31/01 16:15:00***

QC Group	Run Sequence	CAS #	Analyte	Result	Units	Dilution Factor	Detection Limit	Code	Run Date
0102006-01A		**SW846 ME/8015A Diesel Range Organics by GC/FID**							
X018	XG.2001.148-2		Diesel Range Organics	210	mg / Kg	1	25		02/01/01
0102006-01B		**SW846 5030A/8015A GRO by GC/FID**							
X0114	XG.2001.149-2		Gasoline Range Organics	ND	mg / Kg	1	0.25		02/01/01

Client Sample ID ***ST106 SB30 320'*** Sample Matrix ***SOIL*** Sample Collected ***01/31/01 17:25:00***

QC Group	Run Sequence	CAS #	Analyte	Result	Units	Dilution Factor	Detection Limit	Code	Run Date
0102006-02A		**SW846 ME/8015A Diesel Range Organics by GC/FID**							
X018	XG.2001.148-3		Diesel Range Organics	35	mg / Kg	1	25		02/01/01
0102006-02B		**SW846 5030A/8015A GRO by GC/FID**							
X0114	XG.2001.149-3		Gasoline Range Organics	ND	mg / Kg	1	0.25		02/01/01

Member
American Council of
Independent Laboratories, Inc.

REPRODUCTION OF THIS REPORT IN LESS THAN FULL REQUIRES THE WRITTEN CONSENT OF AAL
THIS REPORT MAY NOT BE USED IN ANY MANNER BY THE CLIENT OR ANY OTHER THIRD PARTY TO CLAIM
PRODUCT ENDORSEMENT BY ANY ACCREDITATION PROGRAM

Certificate of Analysis

Client: **CH2MHILL**

Project: **0102006** **160660.02.FF.SA**

**** Sample specific Detection Limit is determined by multiplying the sample Dilution Factor by the listed Reporting Detection Limit. ****

**** ND = Not detected: less than the sample specific Detection Limit. Results relate only to the items tested. ****

Assaigai Analytical Laboratories, Inc.

Quality Control Summary

Client: CH2MHILL

ct: 0102006 160660.02.FF.SA

Explanation of codes

D	*Not applicable due to sample dilution*
L	*Not applicable due to MDL proximity*

QC Type **LCS: Lab Control Spike** QC Matrix **SOLID**

QC Group	Run Sequence	CAS #	Analyte	Result	Units	Dilution Factor	Detection Limit	Code	Run Date
X0114-002		**SW846 5030A/8015A GRO by GC/FID**							
X0114	XG.2001.43-2		Gasoline Range Organics	110	% Recovery	1	NA		01/09/01
X018-002		**SW846 ME/8015A Diesel Range Organics by GC/FID**							
X018	XG.2001.41-2		Diesel Range Organics	94	% Recovery	1	NA		01/09/01

QC Type **LCSD: Lab Control Spike Duplicate Accuracy** QC Matrix **SOLID**

QC Group	Run Sequence	CAS #	Analyte	Result	Units	Dilution Factor	Detection Limit	Code	Run Date
X0114-003		**SW846 5030A/8015A GRO by GC/FID**							
X0114	XG.2001.43-3		Gasoline Range Organics	106	% Recovery	1	NA		01/09/01
X018-003		**SW846 ME/8015A Diesel Range Organics by GC/FID**							
X018	XG.2001.41-3		Diesel Range Organics	104	% Recovery	1	NA		01/09/01

Type **LCSD: Lab Control Spike Duplicate Precision** QC Matrix **SOLID**

QC Group	Run Sequence	CAS #	Analyte	Result	Units	Dilution Factor	Detection Limit	Code	Run Date
X0114-003		**SW846 5030A/8015A GRO by GC/FID**							
X0114	XG.2001.43-3		Gasoline Range Organics	4	RPD	1	NA		01/09/01
X018-003		**SW846 ME/8015A Diesel Range Organics by GC/FID**							
X018	XG.2001.41-3		Diesel Range Organics	10	RPD	1	NA		01/09/01

QC Type **MB: Method Blank** QC Matrix **SOLID**

QC Group	Run Sequence	CAS #	Analyte	Result	Units	Dilution Factor	Detection Limit	Code	Run Date
X0114-001		**SW846 5030A/8015A GRO by GC/FID**							
X0114	XG.2001.43-1		Gasoline Range Organics	ND	mg / Kg	1	0.25		01/09/01
X0114-010		**SW846 5030A/8015A GRO by GC/FID**							
X0114	XG.2001.56-1		Gasoline Range Organics	ND	mg / Kg	1	0.25		01/10/01
X0114-014		**SW846 5030A/8015A GRO by GC/FID**							
X0114	XG.2001.120-1		Gasoline Range Organics	ND	mg / Kg	1	0.25		01/26/01
X0114-018		**SW846 5030A/8015A GRO by GC/FID**							
X0114	XG.2001.129-1		Gasoline Range Organics	ND	mg / Kg	1	0.25		01/30/01

Quality Control Summary

Client: **CH2MHILL**

Project: **0102006** **160660.02.FF.SA**

Explanation of codes

D	*Not applicable due to sample dilu*
L	*Not applicable due to MDL proxin*

X0114-026		**SW846 5030A/8015A GRO by GC/FID**							
X0114	XG.2001.149-1		Gasoline Range Organics	ND	mg / Kg	1	0.25		02/01/01
X018-001		**SW846 ME/8015A Diesel Range Organics by GC/FID**							
X018	XG.2001.41-1		Diesel Range Organics	ND	mg / Kg	1	25		01/09/01
X018-010		**SW846 ME/8015A Diesel Range Organics by GC/FID**							
X018	XG.2001.121-1		Diesel Range Organics	ND	mg / Kg	1	25		01/26/01
X018-016		**SW846 ME/8015A Diesel Range Organics by GC/FID**							
X018	XG.2001.130-1		Diesel Range Organics	ND	mg / Kg	1	25		01/30/01
X018-023		**SW846 ME/8015A Diesel Range Organics by GC/FID**							
X018	XG.2001.148-1		Diesel Range Organics	ND	mg / Kg	1	25		02/01/01

QC Type **MS: Matrix Spike** QC Matrix **SOLID**

QC Group	Run Sequence	CAS #	Analyte	Result	Units	Dilution Factor	Detection Limit	Code	Run Date
X0114-012		**SW846 5030A/8015A GRO by GC/FID**							
X0114	XG.2001.56-3		Gasoline Range Organics	112	% Recovery	10	NA		01/10/01
X018-005		**SW846 ME/8015A Diesel Range Organics by GC/FID**							
X018	XG.2001.41-5		Diesel Range Organics	73	% Recovery	10	NA		01/09/0

QC Type **MSD: Matrix Spike Duplicate Accuracy** QC Matrix **SOLID**

QC Group	Run Sequence	CAS #	Analyte	Result	Units	Dilution Factor	Detection Limit	Code	Run Date
X0114-013		**SW846 5030A/8015A GRO by GC/FID**							
X0114	XG.2001.56-4		Gasoline Range Organics	112	% Recovery	10	NA		01/10/0
X018-006		**SW846 ME/8015A Diesel Range Organics by GC/FID**							
X018	XG.2001.41-6		Diesel Range Organics	76	% Recovery	10	NA		01/09/0

QC Type **MSD: Matrix Spike Duplicate Precision** QC Matrix **SOLID**

QC Group	Run Sequence	CAS #	Analyte	Result	Units	Dilution Factor	Detection Limit	Code	Run Date
X0114-013		**SW846 5030A/8015A GRO by GC/FID**							
X0114	XG.2001.56-4		Gasoline Range Organics	< 1	RPD	10	NA		01/10/01
X018-006		**SW846 ME/8015A Diesel Range Organics by GC/FID**							
X018	XG.2001.41-6		Diesel Range Organics	5	RPD	10	NA		01/09/01

Assaigai Analytical Laboratories, Inc.

Surrogate Summary: QC

Client: CH2MHILL

ect: 0102006 160660.02.FF.SA

QC Type **LCS** QC Matrix **SOLID**

QC Group	Run Sequence	CAS #	Analyte	Result	Units	Dilution Factor	Detection Limit	Code	Run Date
X0114-002		GRO							
X0114	XG.2001.43-2	NA	4-Bromofluorobenzene-FID	106	% Recovery	1	NA		01/09/01
X0114	XG.2001.43-2	NA	4-Bromofluorobenzene-PID	ND	% Recovery	1	NA		01/09/01
X0114	XG.2001.43-2	NA	aaa-Trifluorotoluene-FID	105	% Recovery	1	NA		01/09/01
X0114	XG.2001.43-2	NA	aaa-Trifluorotoluene-PID	ND	% Recovery	1	NA		01/09/01
X018-002		DRO							
X018	XG.2001.41-2	NA	O-terphenyl	106	% Recovery	1	NA		01/09/01

QC Type **LCSD** QC Matrix **SOLID**

QC Group	Run Sequence	CAS #	Analyte	Result	Units	Dilution Factor	Detection Limit	Code	Run Date
X0114-003		GRO							
X0114	XG.2001.43-3	NA	4-Bromofluorobenzene-FID	106	% Recovery	1	NA		01/09/01
X0114	XG.2001.43-3	NA	4-Bromofluorobenzene-PID	ND	% Recovery	1	NA		01/09/01
	XG.2001.43-3	NA	aaa-Trifluorotoluene-FID	105	% Recovery	1	NA		01/09/01
X0114	XG.2001.43-3	NA	aaa-Trifluorotoluene-PID	ND	% Recovery	1	NA		01/09/01
X018-003		DRO							
X018	XG.2001.41-3	NA	O-terphenyl	113	% Recovery	1	NA		01/09/01

QC Type **MB** QC Matrix **SOLID**

QC Group	Run Sequence	CAS #	Analyte	Result	Units	Dilution Factor	Detection Limit	Code	Run Date
X0114-001		GRO							
X0114	XG.2001.43-1	NA	4-Bromofluorobenzene-FID	93	% Recovery	1	NA		01/09/01
X0114	XG.2001.43-1	NA	4-Bromofluorobenzene-PID	ND	% Recovery	1	NA		01/09/01
X0114	XG.2001.43-1	NA	aaa-Trifluorotoluene-FID	104	% Recovery	1	NA		01/09/01
X0114	XG.2001.43-1	NA	aaa-Trifluorotoluene-PID	ND	% Recovery	1	NA		01/09/01
X0114-010		GRO							
X0114	XG.2001.56-1	NA	4-Bromofluorobenzene-FID	92	% Recovery	1	NA		01/10/01
X0114	XG.2001.56-1	NA	4-Bromofluorobenzene-PID	ND	% Recovery	1	NA		01/10/01
X0114	XG.2001.56-1	NA	aaa-Trifluorotoluene-FID	102	% Recovery	1	NA		01/10/01
X0114	XG.2001.56-1	NA	aaa-Trifluorotoluene-PID	ND	% Recovery	1	NA		01/10/01
X0114-014		GRO							
X0114	XG.2001.120-1	NA	4-Bromofluorobenzene-FID	93	% Recovery	1	NA		01/26/01
X0114	XG.2001.120-1	NA	4-Bromofluorobenzene-PID	ND	% Recovery	1	NA		01/26/01
	XG.2001.120-1	NA	aaa-Trifluorotoluene-FID	102	% Recovery	1	NA		01/26/01

Surrogate Summary: QC

Client: **CH2MHILL**

Project: **0102006** **160660.02.FF.SA**

X0114	XG.2001.120-1	NA	aaa-Trifluorotoluene-PID	ND	% Recovery	1	NA		01/26/01
X0114-018		GRO							
X0114	XG.2001.129-1	NA	4-Bromofluorobenzene-FID	89	% Recovery	1	NA		01/30/01
X0114	XG.2001.129-1	NA	4-Bromofluorobenzene-PID	ND	% Recovery	1	NA		01/30/01
X0114	XG.2001.129-1	NA	aaa-Trifluorotoluene-FID	101	% Recovery	1	NA		01/30/01
X0114	XG.2001.129-1	NA	aaa-Trifluorotoluene-PID	ND	% Recovery	1	NA		01/30/01
X0114-026		GRO							
X0114	XG.2001.149-1	NA	4-Bromofluorobenzene-FID	87	% Recovery	1	NA		02/01/01
X0114	XG.2001.149-1	NA	4-Bromofluorobenzene-PID	ND	% Recovery	1	NA		02/01/01
X0114	XG.2001.149-1	NA	aaa-Trifluorotoluene-FID	102	% Recovery	1	NA		02/01/01
X0114	XG.2001.149-1	NA	aaa-Trifluorotoluene-PID	ND	% Recovery	1	NA		02/01/01
X018-001		DRO							
X018	XG.2001.41-1	NA	O-terphenyl	96	% Recovery	1	NA		01/09/01
X018-010		DRO							
X018	XG.2001.121-1	NA	O-terphenyl	99	% Recovery	1	NA		01/26/01
X018-016		DRO							
X018	XG.2001.130-1	NA	O-terphenyl	87	% Recovery	1	NA		01/30/01
X018-023		DRO							
X018	XG.2001.148-1	NA	O-terphenyl	88	% Recovery	1	NA		02/01/01

QC Type **MS** QC Matrix **SOLID**

QC Group	Run Sequence	CAS #	Analyte	Result	Units	Dilution Factor	Detection Limit	Code	Run Date
X0114-012		GRO							
X0114	XG.2001.56-3	NA	4-Bromofluorobenzene-FID	105	% Recovery	10	NA		01/10/01
X0114	XG.2001.56-3	NA	4-Bromofluorobenzene-PID	ND	% Recovery	10	NA		01/10/01
X0114	XG.2001.56-3	NA	aaa-Trifluorotoluene-FID	106	% Recovery	10	NA		01/10/01
X0114	XG.2001.56-3	NA	aaa-Trifluorotoluene-PID	ND	% Recovery	10	NA		01/10/01
X018-005		DRO							
X018	XG.2001.41-5	NA	O-terphenyl	138	% Recovery	10	NA		01/09/0

QC Type **MSD** QC Matrix **SOLID**

QC Group	Run Sequence	CAS #	Analyte	Result	Units	Dilution Factor	Detection Limit	Code	Run Date
X0114-013		GRO							
X0114	XG.2001.56-4	NA	4-Bromofluorobenzene-FID	106	% Recovery	10	NA		01/10/0
X0114	XG.2001.56-4	NA	4-Bromofluorobenzene-PID	ND	% Recovery	10	NA		01/10/0
X0114	XG.2001.56-4	NA	aaa-Trifluorotoluene-FID	107	% Recovery	10	NA		01/10/0
X0114	XG.2001.56-4	NA	aaa-Trifluorotoluene-PID	ND	% Recovery	10	NA		01/10/0
X018-006		DRO							
X018	XG.2001.41-6	NA	O-terphenyl	138	% Recovery	10	NA		01/09/

Surrogate Summary: QC

Client: **CH2MHILL**

ect: **0102006** **160660.02.FF.SA**

Assaigai Analytical Laboratories, Inc.

Surrogate Summary: Fraction

Client: **CH2MHILL**

Project: **0102006** **160660.02.FF.SA**

Client Sample ID **ST106 SB30 310'** Sample Matrix **SOIL**

QC Group	Run Sequence	CAS #	Analyte	Result	Units	Dilution Factor	Detection Limit	Code	Run Date
0102006-01A		DRO							**X018-(24**
X018	XG.2001.148-2	NA	O-terphenyl	104	% Recovery	1	NA		02/01/01
0102006-01B		GRO							**X0114-(27**
X0114	XG.2001.149-2	NA	4-Bromofluorobenzene-FID	92	% Recovery	1	NA		02/01/01
X0114	XG.2001.149-2	NA	4-Bromofluorobenzene-PID	ND	% Recovery	1	NA		02/01/01
X0114	XG.2001.149-2	NA	aaa-Trifluorotoluene-FID	107	% Recovery	1	NA		02/01/01
X0114	XG.2001.149-2	NA	aaa-Trifluorotoluene-PID	ND	% Recovery	1	NA		02/01/01

Client Sample ID **ST106 SB30 320'** Sample Matrix **SOIL**

QC Group	Run Sequence	CAS #	Analyte	Result	Units	Dilution Factor	Detection Limit	Code	Run Date
0102006-02A		DRO							**X018-(25**
X018	XG.2001.148-3	NA	O-terphenyl	96	% Recovery	1	NA		02/01/01
0102006-02B		GRO							**X0114**
X0114	XG.2001.149-3	NA	4-Bromofluorobenzene-FID	89	% Recovery	1	NA		02/01/0
X0114	XG.2001.149-3	NA	4-Bromofluorobenzene-PID	ND	% Recovery	1	NA		02/01/01
X0114	XG.2001.149-3	NA	aaa-Trifluorotoluene-FID	104	% Recovery	1	NA		02/01/01
X0114	XG.2001.149-3	NA	aaa-Trifluorotoluene-PID	ND	% Recovery	1	NA		02/01/01

ASSOCIATED ANALYTICAL LABORATORIES, INC.

Chain of Custody Record

7300 JEFFERSON N.E.
ALBUQUERQUE, NEW MEXICO 87109
(505) 345-8964

3332 WEDGEWOOD
EL PASO, TEXAS 79925
(915) 593-6000

127 EASTGATE DRIVE, 212-C
LOS ALAMOS, NEW MEXICO 87544
(505) 662-2558

Lab job No.: 8102006 Date: 1-31

Page 1 of 1

Client: CH2M HILL

Address: 6201 INDIANSCHOOL NE #350

City / State / Zip: ALBQ NM 87110

Project Name / Number: KAFB/TO10/Bulk Fuels

Contract / Purchase Order / Quote:

Project Manager / Contact: Murchek / LeFevre

Telephone No.: 884 5600

Fax No.: 883-7507

Samplers: (signature)

AAL Fraction Number	Field Sample Number / Location	Date	Time	Sample Type	Type / Size of Container	Preservation Temp.	Preservation Chemical	No. of Containers	DRO 8015B	GRO 8015B									Remarks
1A,B	ST106 SB30 310	1-30	1015	Soil	4oz	ICE	—	2	X	X									
2A,B	ST106 SB30 320	1-30	1725	Soil	4oz	ICE	—	2	X	X									

5 samples

Relinquished by:	Date	Received by:	Relinquished by:	Date	Received by:
Signature:	2-1-01	Signature:	Signature:		Signature:
Printed: Jim D LeFevre	Time: 1:31	Printed:	Printed:	Time	Printed:
Company: CH2M HILL		Company:	Company:		Company:
Reason: Relinquished by LAB Courier		Reason:	Reason:		Reason:

Method of Shipment:

Shipment No.

Special Instructions:

Comments: 24 hr TAT on 8015B

After analysis, samples are to be:

- ☐ Disposed of (additional fee)
- ☐ Stored (30 days max)
- ☐ Stored over 30 days (additional fee)
- ☐ Returned to customer

COURIER

ASSAIGAI
ANALYTICAL
LABORATORIES, INC.
7300 Jefferson, NE • Albuquerque, New Mexico 87109 • (505) 345-8964 • FAX (505) 345-7259
3332 Wedgewood Dr., Suite N • El Paso, Texas 79925 • (915) 593-6000 • FAX (915) 593-7820
127 Eastgate Drive, 212-C • Los Alamos, New Mexico 87544 • (505) 662-255

RECEIVED FEB 1 2 2001

Explanation of codes

B	*analyte detected in Method Blank*
E	*result is estimated*
H	*analyzed out of hold time*
N	*tentatively identified compound*
S	*subcontracted*
1-9	*see footnote*

CH2MHILL
attn: **AMY HALLORAN**
6001 INDIAN SCHOOL RD NE STE 350
ALBUQUERQUE, NM 87110-4140

Assaigai Analytical Laboratories, Inc.

Certificate of Analysis

Client: **CH2MHILL**
Project: **0102020** **160660.02.FF.SA**

William P. Biava: President of Assaigai Analytical Laboratories, Inc.

Client Sample ID ***ST106 SB30 325'*** Sample Matrix ***SOIL*** Sample Collected ***02/02/01 11:30:00***

QC Group	Run Sequence	CAS #	Analyte	Result	Units	Dilution Factor	Detection Limit	Code	Run Date
0102020-01A		**SW846 ME/8015A Diesel Range Organics by GC/FID**							
X018	XG.2001.153-2		Diesel Range Organics	ND	mg / Kg	1	25		02/02/01
0102020-01B		**SW846 5030A/8015A GRO by GC/FID**							
X0114	XG.2001.168-3		Gasoline Range Organics	ND	mg / Kg	1	0.25		02/07/01

Client Sample ID ***ST106 SB30 330'*** Sample Matrix ***SOIL*** Sample Collected ***02/02/01 11:58:00***

QC Group	Run Sequence	CAS #	Analyte	Result	Units	Dilution Factor	Detection Limit	Code	Run Date
0102020-02A		**SW846 ME/8015A Diesel Range Organics by GC/FID**							
X018	XG.2001.153-3		Diesel Range Organics	ND	mg / Kg	1	25		02/02/01
0102020-02B		**SW846 5030A/8015A GRO by GC/FID**							
X0114	XG.2001.168-4		Gasoline Range Organics	ND	mg / Kg	1	0.25		02/07/01

Member
American Council of
Independent Laboratories, Inc.

REPRODUCTION OF THIS REPORT IN LESS THAN FULL REQUIRES THE WRITTEN CONSENT OF AAL
THIS REPORT MAY NOT BE USED IN ANY MANNER BY THE CLIENT OR ANY OTHER THIRD PARTY TO CLAIM
PRODUCT ENDORSEMENT BY ANY ACCREDITATION PROGRAM

Certificate of Analysis

Client: **CH2MHILL**

Project: **0102020** **160660.02.FF.SA**

**** Sample specific Detection Limit is determined by multiplying the sample Dilution Factor by the listed Reporting Detection Limit. ****

**** ND = Not detected: less than the sample specific Deteclion Limit. Results relate only to the items tested. ****

Assaigai Analytical Laboratories, Inc.

Quality Control Summary

Client: **CH2MHILL**

ct: **0102020** **160660.02.FF.SA**

Explanation of codes

D	*Not applicable due to sample dilution*
L	*Not applicable due to MDL proximity*

QC Type **LCS: Lab Control Spike** QC Matrix **SOLID**

QC Group	Run Sequence	CAS #	Analyte	Result	Units	Dilution Factor	Detection Limit	Code	Run Date
X0114-002		**SW846 5030A/8015A GRO by GC/FID**							
X0114	XG.2001.43-2		Gasoline Range Organics	110	% Recovery	1	NA		01/09/01
X018-002		**SW846 ME/8015A Diesel Range Organics by GC/FID**							
X018	XG.2001.41-2		Diesel Range Organics	94	% Recovery	1	NA		01/09/01

QC Type **LCSD: Lab Control Spike Duplicate Accuracy** QC Matrix **SOLID**

QC Group	Run Sequence	CAS #	Analyte	Result	Units	Dilution Factor	Detection Limit	Code	Run Date
X0114-003		**SW846 5030A/8015A GRO by GC/FID**							
X0114	XG.2001.43-3		Gasoline Range Organics	106	% Recovery	1	NA		01/09/01
X018-003		**SW846 ME/8015A Diesel Range Organics by GC/FID**							
X018	XG.2001.41-3		Diesel Range Organics	104	% Recovery	1	NA		01/09/01

Type **LCSD: Lab Control Spike Duplicate Precision** QC Matrix **SOLID**

QC Group	Run Sequence	CAS #	Analyte	Result	Units	Dilution Factor	Detection Limit	Code	Run Date
X0114-003		**SW846 5030A/8015A GRO by GC/FID**							
X0114	XG.2001.43-3		Gasoline Range Organics	4	RPD	1	NA		01/09/01
X018-003		**SW846 ME/8015A Diesel Range Organics by GC/FID**							
X018	XG.2001.41-3		Diesel Range Organics	10	RPD	1	NA		01/09/01

QC Type **MB: Method Blank** QC Matrix **SOLID**

QC Group	Run Sequence	CAS #	Analyte	Result	Units	Dilution Factor	Detection Limit	Code	Run Date
X0114-001		**SW846 5030A/8015A GRO by GC/FID**							
X0114	XG.2001.43-1		Gasoline Range Organics	ND	mg / Kg	1	0.25		01/09/01
X0114-010		**SW846 5030A/8015A GRO by GC/FID**							
X0114	XG.2001.56-1		Gasoline Range Organics	ND	mg / Kg	1	0.25		01/10/01
X0114-014		**SW846 5030A/8015A GRO by GC/FID**							
X0114	XG.2001.120-1		Gasoline Range Organics	ND	mg / Kg	1	0.25		01/26/01
X0114-018		**SW846 5030A/8015A GRO by GC/FID**							
X0114	XG.2001.129-1		Gasoline Range Organics	ND	mg / Kg	1	0.25		01/30/01

Quality Control Summary

Client: **CH2MHILL**

Project: **0102020** **160660.02.FF.SA**

Explanation of codes

D	*Not applicable due to sample dilt*
L	*Not applicable due to MDL proxim*

X0114-026		**SW846 5030A/8015A GRO by GC/FID**							
X0114	XG.2001.149-1		Gasoline Range Organics	ND	mg / Kg	1	0.25		02/01/01
X0114-029		**SW846 5030A/8015A GRO by GC/FID**							
X0114	XG.2001.168-1		Gasoline Range Organics	ND	mg / Kg	1	0.25		02/07/01
X018-001		**SW846 ME/8015A Diesel Range Organics by GC/FID**							
X018	XG.2001.41-1		Diesel Range Organics	ND	mg / Kg	1	25		01/09/01
X018-010		**SW846 ME/8015A Diesel Range Organics by GC/FID**							
X018	XG.2001.121-1		Diesel Range Organics	ND	mg / Kg	1	25		01/26/01
X018-016		**SW846 ME/8015A Diesel Range Organics by GC/FID**							
X018	XG.2001.130-1		Diesel Range Organics	ND	mg / Kg	1	25		01/30/01
X018-023		**SW846 ME/8015A Diesel Range Organics by GC/FID**							
X018	XG.2001.148-1		Diesel Range Organics	ND	mg / Kg	1	25		02/01/01
X018-026		**SW846 ME/8015A Diesel Range Organics by GC/FID**							
X018	XG.2001.153-1		Diesel Range Organics	ND	mg / Kg	1	25		02/02/0

QC Type **MS: Matrix Spike** QC Matrix **SOLID**

QC Group	Run Sequence	CAS #	Analyte	Result	Units	Dilution Factor	Detection Limit	Code	Run Date
X0114-012		**SW846 5030A/8015A GRO by GC/FID**							
X0114	XG.2001.56-3		Gasoline Range Organics	112	% Recovery	10	NA		01/10/01
X018-005		**SW846 ME/8015A Diesel Range Organics by GC/FID**							
X018	XG.2001.41-5		Diesel Range Organics	73	% Recovery	10	NA		01/09/01

QC Type **MSD: Matrix Spike Duplicate Accuracy** QC Matrix **SOLID**

QC Group	Run Sequence	CAS #	Analyte	Result	Units	Dilution Factor	Detection Limit	Code	Run Date
X0114-013		**SW846 5030A/8015A GRO by GC/FID**							
X0114	XG.2001.56-4		Gasoline Range Organics	112	% Recovery	10	NA		01/10/01
X018-006		**SW846 ME/8015A Diesel Range Organics by GC/FID**							
X018	XG.2001.41-6		Diesel Range Organics	76	% Recovery	10	NA		01/09/01

QC Type **MSD: Matrix Spike Duplicate Precision** QC Matrix **SOLID**

QC Group	Run Sequence	CAS #	Analyte	Result	Units	Dilution Factor	Detection Limit	Code	Run Date
X0114-013		**SW846 5030A/8015A GRO by GC/FID**							
X0114	XG.2001.56-4		Gasoline Range Organics	< 1	RPD	10	NA		01/10/01

Quality Control Summary

Client: **CH2MHILL**

ect: **0102020** **160660.02.FF.SA**

Explanation of codes

D *Not applicable due to sample dilution*

L *Not applicable due to MDL proximity*

X018-006 **SW846 ME/8015A Diesel Range Organics by GC/FID**

X018	XG.2001.41-6		Diesel Range Organics	5	RPD	10	NA		01/09/01

Assaigai Analytical Laboratories, Inc.

Surrogate Summary: QC

Client: **CH2MHILL**

Project: **0102020** **160660.02.FF.SA**

QC Type **LCS** QC Matrix **SOLID**

QC Group	Run Sequence	CAS #	Analyte	Result	Units	Dilution Factor	Detection Limit	Code	Run Date
X0114-002		GRO							
X0114	XG.2001.43-2	NA	4-Bromofluorobenzene-FID	106	% Recovery	1	NA		01/09/01
X0114	XG.2001.43-2	NA	4-Bromofluorobenzene-PID	ND	% Recovery	1	NA		01/09/01
X0114	XG.2001.43-2	NA	aaa-Trifluorotoluene-FID	105	% Recovery	1	NA		01/09/01
X0114	XG.2001.43-2	NA	aaa-Trifluorotoluene-PID	ND	% Recovery	1	NA		01/09/01
X018-002		DRO							
X018	XG.2001.41-2	NA	O-terphenyl	106	% Recovery	1	NA		01/09/01

QC Type **LCSD** QC Matrix **SOLID**

QC Group	Run Sequence	CAS #	Analyte	Result	Units	Dilution Factor	Detection Limit	Code	Run Date
X0114-003		GRO							
X0114	XG.2001.43-3	NA	4-Bromofluorobenzene-FID	106	% Recovery	1	NA		01/09/01
	XG.2001.43-3	NA	4-Bromofluorobenzene-PID	ND	% Recovery	1	NA		01/09/01
	XG.2001.43-3	NA	aaa-Trifluorotoluene-FID	105	% Recovery	1	NA		01/09/01
X0114	XG.2001.43-3	NA	aaa-Trifluorotoluene-PID	ND	% Recovery	1	NA		01/09/01
X018-003		DRO							
X018	XG.2001.41-3	NA	O-terphenyl	113	% Recovery	1	NA		01/09/01

QC Type **MB** QC Matrix **SOLID**

QC Group	Run Sequence	CAS #	Analyte	Result	Units	Dilution Factor	Detection Limit	Code	Run Date
X0114-001		GRO							
X0114	XG.2001.43-1	NA	4-Bromofluorobenzene-FID	93	% Recovery	1	NA		01/09/01
X0114	XG.2001.43-1	NA	4-Bromofluorobenzene-PID	ND	% Recovery	1	NA		01/09/01
X0114	XG.2001.43-1	NA	aaa-Trifluorotoluene-FID	104	% Recovery	1	NA		01/09/01
X0114	XG.2001.43-1	NA	aaa-Trifluorotoluene-PID	ND	% Recovery	1	NA		01/09/01
X0114-010		GRO							
X0114	XG.2001.56-1	NA	4-Bromofluorobenzene-FID	92	% Recovery	1	NA		01/10/01
X0114	XG.2001.56-1	NA	4-Bromofluorobenzene-PID	ND	% Recovery	1	NA		01/10/01
X0114	XG.2001.56-1	NA	aaa-Trifluorotoluene-FID	102	% Recovery	1	NA		01/10/01
X0114	XG.2001.56-1	NA	aaa-Trifluorotoluene-PID	ND	% Recovery	1	NA		01/10/01
X0114-014		GRO							
X0114	XG.2001.120-1	NA	4-Bromofluorobenzene-FID	93	% Recovery	1	NA		01/26/01
[illegible]4	XG.2001.120-1	NA	4-Bromofluorobenzene-PID	ND	% Recovery	1	NA		01/26/01
[illegible]4	XG.2001.120-1	NA	aaa-Trifluorotoluene-FID	102	% Recovery	1	NA		01/26/01

Surrogate Summary: QC

Client: **CH2MHILL**

Project: **0102020** **160660.02.FF.SA**

X0114	XG.2001.120-1	NA	aaa-Trifluorotoluene-PID	ND	% Recovery	1	NA		01/26/01
X0114-018		GRO							
X0114	XG.2001.129-1	NA	4-Bromofluorobenzene-FID	89	% Recovery	1	NA		01/30/01
X0114	XG.2001.129-1	NA	4-Bromofluorobenzene-PID	ND	% Recovery	1	NA		01/30/01
X0114	XG.2001.129-1	NA	aaa-Trifluorotoluene-FID	101	% Recovery	1	NA		01/30/01
X0114	XG.2001.129-1	NA	aaa-Trifluorotoluene-PID	ND	% Recovery	1	NA		01/30/01
X0114-026		GRO							
X0114	XG.2001.149-1	NA	4-Bromofluorobenzene-FID	87	% Recovery	1	NA		02/01/01
X0114	XG.2001.149-1	NA	4-Bromofluorobenzene-PID	ND	% Recovery	1	NA		02/01/01
X0114	XG.2001.149-1	NA	aaa-Trifluorotoluene-FID	102	% Recovery	1	NA		02/01/01
X0114	XG.2001.149-1	NA	aaa-Trifluorotoluene-PID	ND	% Recovery	1	NA		02/01/0
X0114-029		GRO							
X0114	XG.2001.168-1	NA	4-Bromofluorobenzene-FID	86	% Recovery	1	NA		02/07/01
X0114	XG.2001.168-1	NA	4-Bromofluorobenzene-PID	ND	% Recovery	1	NA		02/07/01
X0114	XG.2001.168-1	NA	aaa-Trifluorotoluene-FID	101	% Recovery	1	NA		02/07/01
X0114	XG.2001.168-1	NA	aaa-Trifluorotoluene-PID	ND	% Recovery	1	NA		02/07/01
X018-001		DRO							
X018	XG.2001.41-1	NA	O-terphenyl	96	% Recovery	1	NA		01/09/01
X018-010		DRO							
X018	XG.2001.121-1	NA	O-terphenyl	99	% Recovery	1	NA		01/26/01
X018-016		DRO							
X018	XG.2001.130-1	NA	O-terphenyl	87	% Recovery	1	NA		01/30/01
X018-023		DRO							
X018	XG.2001.148-1	NA	O-terphenyl	88	% Recovery	1	NA		02/01/01
X018-026		DRO							
X018	XG.2001.153-1	NA	O-terphenyl	91	% Recovery	1	NA		02/02/01

QC Type **MS** QC Matrix **SOLID**

QC Group	Run Sequence	CAS #	Analyte	Result	Units	Dilution Factor	Detection Limit	Code	Run Date
X0114-012		GRO							
X0114	XG.2001.56-3	NA	4-Bromofluorobenzene-FID	105	% Recovery	10	NA		01/10/01
X0114	XG.2001.56-3	NA	4-Bromofluorobenzene-PID	ND	% Recovery	10	NA		01/10/01
X0114	XG.2001.56-3	NA	aaa-Trifluorotoluene-FID	106	% Recovery	10	NA		01/10/01
X0114	XG.2001.56-3	NA	aaa-Trifluorotoluene-PID	ND	% Recovery	10	NA		01/10/01
X018-005		DRO							
X018	XG.2001.41-5	NA	O-terphenyl	138	% Recovery	10	NA		01/09/01

Surrogate Summary: QC

Client: **CH2MHILL**

Project: **0102020** **160660.02.FF.SA**

QC Type **MSD** QC Matrix **SOLID**

QC Group	Run Sequence	CAS #	Analyte	Result	Units	Dilution Factor	Detection Limit	Code	Run Date
X0114-013		GRO							
X0114	XG.2001.56-4	NA	4-Bromofluorobenzene-FID	106	% Recovery	10	NA		01/10/01
X0114	XG.2001.56-4	NA	4-Bromofluorobenzene-PID	ND	% Recovery	10	NA		01/10/01
X0114	XG.2001.56-4	NA	aaa-Trifluorotoluene-FID	107	% Recovery	10	NA		01/10/01
X0114	XG.2001.56-4	NA	aaa-Trifluorotoluene-PID	ND	% Recovery	10	NA		01/10/01
X018-006		DRO							
X018	XG.2001.41-6	NA	O-terphenyl	138	% Recovery	10	NA		01/09/01

Assaigai Analytical Laboratories, Inc.

Surrogate Summary: Fraction

Client: **CH2MHILL**

Project: **0102020** **160660.02.FF.SA**

Client Sample ID **ST106 SB30 325'** Sample Matrix **SOIL**

QC Group	Run Sequence	CAS #	Analyte	Result	Units	Dilution Factor	Detection Limit	Code	Run Date
0102020-01A		DRO							X018-027
X018	XG.2001.153-2	NA	O-terphenyl	92	% Recovery	1	NA		02/02/01
0102020-01B		GRO							X0114-031
X0114	XG.2001.168-3	NA	4-Bromofluorobenzene-FID	89	% Recovery	1	NA		02/07/01
X0114	XG.2001.168-3	NA	4-Bromofluorobenzene-PID	ND	% Recovery	1	NA		02/07/01
X0114	XG.2001.168-3	NA	aaa-Trifluorotoluene-FID	104	% Recovery	1	NA		02/07/01
X0114	XG.2001.168-3	NA	aaa-Trifluorotoluene-PID	ND	% Recovery	1	NA		02/07/01

Client Sample ID **ST106 SB30 330'** Sample Matrix **SOIL**

QC Group	Run Sequence	CAS #	Analyte	Result	Units	Dilution Factor	Detection Limit	Code	Run Date
0102020-02A		DRO							X018-028
X018	XG.2001.153-3	NA	O-terphenyl	88	% Recovery	1	NA		02/02/01
0102020-02B		GRO							X011[illegible]
X0114	XG.2001.168-4	NA	4-Bromofluorobenzene-FID	89	% Recovery	1	NA		02/07/[illegible]
X0114	XG.2001.168-4	NA	4-Bromofluorobenzene-PID	ND	% Recovery	1	NA		02/07/01
X0114	XG.2001.168-4	NA	aaa-Trifluorotoluene-FID	105	% Recovery	1	NA		02/07/01
X0114	XG.2001.168-4	NA	aaa-Trifluorotoluene-PID	ND	% Recovery	1	NA		02/07/01

ASSOCIATED ANALYTICAL LABORATORIES, INC.

Chain of Custody Record

7300 JEFFERSON N.E.
ALBUQUERQUE, NEW MEXICO 8710
(505) 345-8964

3332 WEDGEWOOD
EL PASO, TEXAS 79925
(915) 593-6000

127 EASTGATE DRIVE, 212-C
LOS ALAMOS, NEW MEXICO 87544
(505) 662-2558

Lab job No.: 0102020 Date 2-2-1

Page 1 of 1

Client CH2M HILL

Address 6001 INDIAN SCHOOL RD NE #350

City / State / Zip ABQ NM 87110

Project Name / Number FAFB/1010/Bulkfuels

Contract / Purchase Order / Quote

Project Manager / Contact Halloran / LeFence

Telephone No. 884 5600

Fax No. 883 7507

Samplers: (signature) [signature]

AAL Fraction Number	Field Sample Number / Location	Date	Time	Sample Type	Type / Size of Container	Preservation Temp.	Preservation Chemical	No. of Containers	DRO	GRO									Remarks
[illegible]	01 06 [illegible] 325	2-2-01	1130	Soil	4oz	ICE	—	2	X	X									
[illegible]	01 06 [illegible] 330	2-2-01	1158	Soil	4oz	ICE	—	2	X	X									

Relinquished by:	Date	Received by:	Relinquished by:	Date	Received by:
Signature [signature]	2/2/01	Signature [signature]	Signature		Signature
Printed [illegible]	Time 1225	Printed [illegible]	Printed	Time	Printed
Company CH2M HILL		Company AAL	Company		Company
Reason Drop off LAB		Reason analysis	Reason		Reason

Method of Shipment:

Shipment No.

Special Instructions:

Comments:

After analysis, samples are to be:

- ❑ Disposed of (additional fee)
- ❑ Stored (30 days max)
- ❑ Stored over 30 days (additional fee)
- ❑ Returned to customer

COURIER

ASSAIGAI
ANALYTICAL
LABORATORIES, INC.
7300 Jefferson, NE • Albuquerque, New Mexico 87109 • (505) 345-8964 • FAX (505) 345-7259
3332 Wedgewood Dr., Suite N • El Paso, Texas 79925 • (915) 593-6000 • FAX (915) 593-7820
127 Eastgate Drive, 212-C • Los Alamos, New Mexico 87544 • (505) 662-255

Explanation of codes

B	*analyte detected in Method Blank*
E	*result is estimated*
H	*analyzed out of hold time*
N	*tentatively identified compound*
S	*subcontracted*
1-9	*see footnote*

CH2MHILL
attn: **AMY HALLORAN**
6001 INDIAN SCHOOL RD NE STE 350
ALBUQUERQUE, NM 87110-4140

Assaigai Analytical Laboratories, Inc.

Certificate of Analysis

Client: **CH2MHILL**
Project: **0102050** **160660.02.FF.SA**

William P. Biava: President of Assaigai Analytical Laboratories, Inc.

Client Sample ID ***ST106 SB31 70'*** Sample Matrix ***SOIL*** Sample Collected ***02/06/01 17:15:00***

Group	Run Sequence	CAS #	Analyte	Result	Units	Dilution Factor	Detection Limit	Code	Run Date
0102050-01A		**SW846 ME/8015A Diesel Range Organics by GC/FID**							
X0148	XG.2001.169-4		Diesel Range Organics	ND	mg / Kg	1	25		02/07/01
0102050-01B		**SW846 5030A/8015A GRO by GC/FID**							
X0114	XG.2001.168-2		Gasoline Range Organics	ND	mg / Kg	1	0.25		02/07/01
0102050-01C		**SW846 8260A Purgeable VOCs by GC/MS**							
X0127	XG.2001.198-5	75-34-3	1,1 Dichloroethane	ND	mg / Kg	1	0.005		02/09/01
X0127	XG.2001.198-5	75-34-3	1,1 Dichloroethene	ND	mg / Kg	1	0.005		02/09/01
X0127	XG.2001.198-5	71-55-6	1,1,1 Trichloroethane	ND	mg / Kg	1	0.005		02/09/01
X0127	XG.2001.198-5	630-20-6	1,1,1,2 Tetrachloroethane	ND	mg / Kg	1	0.005		02/09/01
X0127	XG.2001.198-5	79-00-5	1,1,2 Trichloroethane	ND	mg / Kg	1	0.005		02/09/01
X0127	XG.2001.198-5	79-34-5	1,1,2,2 Tetrachloroethane	ND	mg / Kg	1	0.005		02/09/01
X0127	XG.2001.198-5	106-93-4	1,2 Dibromoethane (EDB)	ND	mg / Kg	1	0.005		02/09/01
X0127	XG.2001.198-5	95-50-1	1,2 Dichlorobenzene	ND	mg / Kg	1	0.005		02/09/01
X0127	XG.2001.198-5	107-06-2	1,2 Dichloroethane	ND	mg / Kg	1	0.005		02/09/01
X0127	XG.2001.198-5	78-87-5	1,2 Dichloropropane	ND	mg / Kg	1	0.005		02/09/01
X0127	XG.2001.198-5	96-18-4	1,2,3 Trichloropropane	ND	mg / Kg	1	0.005		02/09/01
X0127	XG.2001.198-5	95-63-6	1,2,4-Trimethylbenzene	ND	mg / Kg	1	0.005		02/09/01
X0127	XG.2001.198-5	541-73-1	1,3 Dichlorobenzene	ND	mg / Kg	1	0.005		02/09/01
X0127	XG.2001.198-5	108-67-8	1,3,5-Trimethylbenzene	ND	mg / Kg	1	0.005		02/09/01
X0127	XG.2001.198-5	764-41-0	1,4 Dichloro-2-butene	ND	mg / Kg	1	0.05		02/09/01
X0127	XG.2001.198-5	106-46-7	1,4 Dichlorobenzene	ND	mg / Kg	1	0.005		02/09/01
7	XG.2001.198-5	78-93-3	2-Butanone (MEK)	ND	mg / Kg	1	0.025		02/09/01

Member
American Council of
Independent Laboratories, Inc.

REPRODUCTION OF THIS REPORT IN LESS THAN FULL REQUIRES THE WRITTEN CONSENT OF AAL.
THIS REPORT MAY NOT BE USED IN ANY MANNER BY THE CLIENT OR ANY OTHER THIRD PARTY TO CLAIM
PRODUCT ENDORSEMENT BY ANY ACCREDITATION PROGRAM

Certificate of Analysis

Client: **CH2MHILL**

Project: **0102050** **160660.02.FF.SA**

X0127	XG.2001.198-5	110-75-8	2-Chloroethylvinylether	ND	mg / Kg	1	0.025		02/09/0
X0127	XG.2001.198-5	591-78-6	2-Hexanone (MBK)	ND	mg / Kg	1	0.025		02/09/0
X0127	XG.2001.198-5	108-10-1	4-Methyl-2-pentanone (MIBK)	ND	mg / Kg	1	0.025		02/09/0
X0127	XG.2001.198-5	67-64-1	Acetone	ND	mg / Kg	1	0.05		02/09/0
X0127	XG.2001.198-5	107-02-8	Acrolein	ND	mg / Kg	1	0.1		02/09/0
X0127	XG.2001.198-5	107-13-1	Acrylonitrile	ND	mg / Kg	1	0.1		02/09/0
X0127	XG.2001.198-5	71-43-2	Benzene	ND	mg / Kg	1	0.005		02/09/0
X0127	XG.2001.198-5	75-27-4	Bromodichloromethane	ND	mg / Kg	1	0.005		02/09/01
X0127	XG.2001.198-5	75-25-2	Bromoform	ND	mg / Kg	1	0.005		02/09/01
X0127	XG.2001.198-5	74-83-9	Bromomethane	ND	mg / Kg	1	0.025		02/09/01
X0127	XG.2001.198-5	75-15-0	Carbon disulfide	ND	mg / Kg	1	0.025		02/09/01
X0127	XG.2001.198-5	56-23-5	Carbon tetrachloride	ND	mg / Kg	1	0.005		02/09/01
X0127	XG.2001.198-5	108-90-7	Chlorobenzene	ND	mg / Kg	1	0.005		02/09/01
X0127	XG.2001.198-5	124-48-1	Chlorodibromomethane	ND	mg / Kg	1	0.005		02/09/01
X0127	XG.2001.198-5	75-00-3	Chloroethane	ND	mg / Kg	1	0.025		02/09/01
X0127	XG.2001.198-5	67-66-3	Chloroform	ND	mg / Kg	1	0.005		02/09/01
X0127	XG.2001.198-5	74-87-3	Chloromethane	ND	mg / Kg	1	0.025		02/09/01
X0127	XG.2001.198-5	156-59-2	cis-1,2 dichloroethene	ND	mg / Kg	1	0.005		02/09/01
X0127	XG.2001.198-5	10061-01-5	cis-1,3 dichloropropene	ND	mg / Kg	1	0.005		02/09/01
X0127	XG.2001.198-5	74-95-3	Dibromomethane	ND	mg / Kg	1	0.005		02/09/01
X0127	XG.2001.198-5	97-63-2	Ethyl methacrylate	ND	mg / Kg	1	0.025		02/09/01
X0127	XG.2001.198-5	100-41-4	Ethylbenzene	ND	mg / Kg	1	0.005		02/09/01
X0127	XG.2001.198-5		Freon 113	ND	mg / Kg	1	0.025		02/09/
X0127	XG.2001.198-5	75-71-8	Freon 12	ND	mg / Kg	1	0.05		02/09/
X0127	XG.2001.198-5	74-88-4	Iodomethane	ND	mg / Kg	1	0.025		02/09/01
X0127	XG.2001.198-5	1634-04-4	Methyl t-butyl ether (MTBE)	ND	mg / Kg	1	0.005		02/09/01
X0127	XG.2001.198-5	75-09-2	Methylene chloride	ND	mg / Kg	1	0.05		02/09/01
X0127	XG.2001.198-5	91-20-3	Naphthalene	ND	mg / Kg	1	0.025		02/09/01
X0127	XG.2001.198-5	95-47-6	o-Xylene	ND	mg / Kg	1	0.005		02/09/01
X0127	XG.2001.198-5	108-38-3/106-42	p/m Xylenes	ND	mg / Kg	1	0.01		02/09/01
X0127	XG.2001.198-5	100-42-5	Styrene	ND	mg / Kg	1	0.005		02/09/01
X0127	XG.2001.198-5	156-60-5	t-1,2 Dichloroethene	ND	mg / Kg	1	0.005		02/09/01
X0127	XG.2001.198-5	10061-02-6	t-1,3 Dichloropropene	ND	mg / Kg	1	0.005		02/09/01
X0127	XG.2001.198-5	127-18-4	Tetrachloroethene	ND	mg / Kg	1	0.005		02/09/01
X0127	XG.2001.198-5	108-88-3	Toluene	ND	mg / Kg	1	0.005		02/09/01
X0127	XG.2001.198-5	79-01-6	Trichloroethene	ND	mg / Kg	1	0.005		02/09/01
X0127	XG.2001.198-5	75-69-4	Trichlorofluoromethane	ND	mg / Kg	1	0.025		02/09/01
X0127	XG.2001.198-5	108-05-4	Vinyl acetate	ND	mg / Kg	1	0.025		02/09/01
X0127	XG.2001.198-5	75-01-4	Vinyl chloride	ND	mg / Kg	1	0.025		02/09/01

**** Sample specific Detection Limit is determined by multiplying the sample Dilution Factor by the listed Reporting Detection Limit. ****

**** ND = Not detected: less than the sample specific Detection Limit. Results relate only to the items tested. ****

Assaigai Analytical Laboratories, Inc.

Quality Control Summary

C[illegible]nt: **CH2MHILL**

[illegible]ct: **0102050** **160660.02.FF.SA**

Explanation of codes	
D	*Not applicable due to sample dilution*
L	*Not applicable due to MDL proximity*

QC Type **LCS: Lab Control Spike** QC Matrix **SOLID**

QC Group	Run Sequence	CAS #	Analyte	Result	Units	Dilution Factor	Detection Limit	Code	Run Date
X0114-002		**SW846 5030A/8015A GRO by GC/FID**							
X0114	XG.2001.43-2		Gasoline Range Organics	110	% Recovery	1	NA		01/09/01
X0127-005		**SW846 8260A Purgeable VOCs by GC/MS**							
X0127	XG.2001.69-5	75-34-3	1,1 Dichloroethene	109	% Recovery	1	NA		01/18/01
X0127	XG.2001.69-5	106-46-7	1,4 Dichlorobenzene	100	% Recovery	1	NA		01/18/01
X0127	XG.2001.69-5	71-43-2	Benzene	113	% Recovery	1	NA		01/18/01
X0127	XG.2001.69-5	108-90-7	Chlorobenzene	106	% Recovery	1	NA		01/18/01
X0127	XG.2001.69-5	108-88-3	Toluene	108	% Recovery	1	NA		01/18/01
X0127	XG.2001.69-5	79-01-6	Trichloroethene	111	% Recovery	1	NA		01/18/01
X0148-002		**SW846 ME/8015A Diesel Range Organics by GC/FID**							
X0148	XG.2001.169-2		Diesel Range Organics	90	% Recovery	1	NA		02/07/01

QC Type **LCSD: Lab Control Spike Duplicate Accuracy** QC Matrix **SOLID**

[illegible]oup	Run Sequence	CAS #	Analyte	Result	Units	Dilution Factor	Detection Limit	Code	Run Date
X0114-003		**SW846 5030A/8015A GRO by GC/FID**							
X0114	XG.2001.43-3		Gasoline Range Organics	106	% Recovery	1	NA		01/09/01
X0127-006		**SW846 8260A Purgeable VOCs by GC/MS**							
X0127	XG.2001.69-6	75-34-3	1,1 Dichloroethene	110	% Recovery	1	NA		01/18/01
X0127	XG.2001.69-6	106-46-7	1,4 Dichlorobenzene	108	% Recovery	1	NA		01/18/01
X0127	XG.2001.69-6	71-43-2	Benzene	115	% Recovery	1	NA		01/18/01
X0127	XG.2001.69-6	108-90-7	Chlorobenzene	113	% Recovery	1	NA		01/18/01
X0127	XG.2001.69-6	108-88-3	Toluene	113	% Recovery	1	NA		01/18/01
X0127	XG.2001.69-6	79-01-6	Trichloroethene	116	% Recovery	1	NA		01/18/01
X0148-003		**SW846 ME/8015A Diesel Range Organics by GC/FID**							
X0148	XG.2001.169-3		Diesel Range Organics	91	% Recovery	1	NA		02/07/01

QC Type **LCSD: Lab Control Spike Duplicate Precision** QC Matrix **SOLID**

QC Group	Run Sequence	CAS #	Analyte	Result	Units	Dilution Factor	Detection Limit	Code	Run Date
X0114-003		**SW846 5030A/8015A GRO by GC/FID**							
X0114	XG.2001.43-3		Gasoline Range Organics	4	RPD	1	NA		01/09/01
X0127-006		**SW846 8260A Purgeable VOCs by GC/MS**							
X0127	XG.2001.69-6	75-34-3	1,1 Dichloroethene	< 1	RPD	1	NA		01/18/01
X[illegible]7	XG.2001.69-6	106-46-7	1,4 Dichlorobenzene	7	RPD	1	NA		01/18/01
[illegible]	XG.2001.69-6	71-43-2	Benzene	2	RPD	1	NA		01/18/01

Quality Control Summary

Client: **CH2MHILL**

Project: **0102050** **160660.02.FF.SA**

Explanation of codes	
D	*Not applicable due to sample dilu*
L	*Not applicable due to MDL proxim*

X0127	XG.2001.69-6	108-90-7	Chlorobenzene	7	RPD	1	NA		01/18/01
X0127	XG.2001.69-6	108-88-3	Toluene	5	RPD	1	NA		01/18/01
X0127	XG.2001.69-6	79-01-6	Trichloroethene	4	RPD	1	NA		01/18/01
X0148-003		**SW846 ME/8015A Diesel Range Organics by GC/FID**							
X0148	XG.2001.169-3		Diesel Range Organics	1	RPD	1	NA		02/07/01

QC Type **MB: Method Blank** QC Matrix **SOLID**

QC Group	Run Sequence	CAS #	Analyte	Result	Units	Dilution Factor	Detection Limit	Code	Run Date
X0114-001		**SW846 5030A/8015A GRO by GC/FID**							
X0114	XG.2001.43-1		Gasoline Range Organics	ND	mg / Kg	1	0.25		01/09/01
X0114-010		**SW846 5030A/8015A GRO by GC/FID**							
X0114	XG.2001.56-1		Gasoline Range Organics	ND	mg / Kg	1	0.25		01/10/01
X0114-014		**SW846 5030A/8015A GRO by GC/FID**							
X0114	XG.2001.120-1		Gasoline Range Organics	ND	mg / Kg	1	0.25		01/26/01
X0114-018		**SW846 5030A/8015A GRO by GC/FID**							
X0114	XG.2001.129-1		Gasoline Range Organics	ND	mg / Kg	1	0.25		01/30/01
X0114-026		**SW846 5030A/8015A GRO by GC/FID**							
X0114	XG.2001.149-1		Gasoline Range Organics	ND	mg / Kg	1	0.25		02/0
X0114-029		**SW846 5030A/8015A GRO by GC/FID**							
X0114	XG.2001.168-1		Gasoline Range Organics	ND	mg / Kg	1	0.25		02/07/01
X0127-001		**SW846 8260A Purgeable VOCs by GC/MS**							
X0127	XG.2001.69-1	75-34-3	1,1 Dichloroethane	ND	mg / Kg	1	0.005		01/18/01
X0127	XG.2001.69-1	75-34-3	1,1 Dichloroethene	ND	mg / Kg	1	0.005		01/18/01
X0127	XG.2001.69-1	71-55-6	1,1,1 Trichloroethane	ND	mg / Kg	1	0.005		01/18/01
X0127	XG.2001.69-1	630-20-6	1,1,1,2 Tetrachloroethane	ND	mg / Kg	1	0.005		01/18/01
X0127	XG.2001.69-1	79-00-5	1,1,2 Trichloroethane	ND	mg / Kg	1	0.005		01/18/01
X0127	XG.2001.69-1	79-34-5	1,1,2,2 Tetrachloroethane	ND	mg / Kg	1	0.005		01/18/01
X0127	XG.2001.69-1	106-93-4	1,2 Dibromoethane (EDB)	ND	mg / Kg	1	0.005		01/18/01
X0127	XG.2001.69-1	95-50-1	1,2 Dichlorobenzene	ND	mg / Kg	1	0.005		01/18/0
X0127	XG.2001.69-1	107-06-2	1,2 Dichloroethane	ND	mg / Kg	1	0.005		01/18/0
X0127	XG.2001.69-1	78-87-5	1,2 Dichloropropane	ND	mg / Kg	1	0.005		01/18/0
X0127	XG.2001.69-1	96-18-4	1,2,3 Trichloropropane	ND	mg / Kg	1	0.005		01/18/0
X0127	XG.2001.69-1	95-63-6	1,2,4-Trimethylbenzene	ND	mg / Kg	1	0.005		01/18/0
X0127	XG.2001.69-1	541-73-1	1,3 Dichlorobenzene	ND	mg / Kg	1	0.005		01/18/0
X0127	XG.2001.69-1	108-67-8	1,3,5-Trimethylbenzene	ND	mg / Kg	1	0.005		01/18/0
X0127	XG.2001.69-1	764-41-0	1,4 Dichloro-2-butene	ND	mg / Kg	1	0.05		01/18/0
X0127	XG.2001.69-1	106-46-7	1,4 Dichlorobenzene	ND	mg / Kg	1	0.005		01/18/0
X0127	XG.2001.69-1	78-93-3	2-Butanone (MEK)	ND	mg / Kg	1	0.025		01/18/0
X0127	XG.2001.69-1	110-75-8	2-Chloroethylvinylether	ND	mg / Kg	1	0.025		01/18/0
X0127	XG.2001.69-1	591-78-6	2-Hexanone (MBK)	ND	mg / Kg	1	0.025		01/18/0
X0127	XG.2001.69-1	108-10-1	4-Methyl-2-pentanone (MIBK)	ND	mg / Kg	1	0.025		01/18/0
X0127	XG.2001.69-1	67-64-1	Acetone	ND	mg / Kg	1	0.05		01/18/0
X0127	XG.2001.69-1	107-02-8	Acrolein	ND	mg / Kg	1	0.1		01/1

Quality Control Summary

Client: CH2MHILL

Project: 0102050 160660.02.FF.SA

Explanation of codes

D	Not applicable due to sample dilution
L	Not applicable due to MDL proximity

X0127	XG.2001.69-1	107-13-1	Acrylonitrile	ND	mg / Kg	1	0.1		01/18/01
X0127	XG.2001.69-1	71-43-2	Benzene	ND	mg / Kg	1	0.005		01/18/01
X0127	XG.2001.69-1	75-27-4	Bromodichloromethane	ND	mg / Kg	1	0.005		01/18/01
X0127	XG.2001.69-1	75-25-2	Bromoform	ND	mg / Kg	1	0.005		01/18/01
X0127	XG.2001.69-1	74-83-9	Bromomethane	ND	mg / Kg	1	0.025		01/18/01
X0127	XG.2001.69-1	75-15-0	Carbon disulfide	ND	mg / Kg	1	0.025		01/18/01
X0127	XG.2001.69-1	56-23-5	Carbon tetrachloride	ND	mg / Kg	1	0.005		01/18/01
X0127	XG.2001.69-1	108-90-7	Chlorobenzene	ND	mg / Kg	1	0.005		01/18/01
X0127	XG.2001.69-1	124-48-1	Chlorodibromomethane	ND	mg / Kg	1	0.005		01/18/01
X0127	XG.2001.69-1	75-00-3	Chloroethane	ND	mg / Kg	1	0.025		01/18/01
X0127	XG.2001.69-1	67-66-3	Chloroform	ND	mg / Kg	1	0.005		01/18/01
X0127	XG.2001.69-1	74-87-3	Chloromethane	ND	mg / Kg	1	0.025		01/18/01
X0127	XG.2001.69-1	156-59-2	cis-1,2 dichloroethene	ND	mg / Kg	1	0.005		01/18/01
X0127	XG.2001.69-1	10061-01-5	cis-1,3 dichloropropene	ND	mg / Kg	1	0.005		01/18/01
X0127	XG.2001.69-1	74-95-3	Dibromomethane	ND	mg / Kg	1	0.005		01/18/01
X0127	XG.2001.69-1	97-63-2	Ethyl methacrylate	ND	mg / Kg	1	0.025		01/18/01
X0127	XG.2001.69-1	100-41-4	Ethylbenzene	ND	mg / Kg	1	0.005		01/18/01
X0127	XG.2001.69-1		Freon 113	ND	mg / Kg	1	0.025		01/18/01
X0127	XG.2001.69-1	75-71-8	Freon 12	ND	mg / Kg	1	0.05		01/18/01
X0127	XG.2001.69-1	74-88-4	Iodomethane	ND	mg / Kg	1	0.025		01/18/01
X0127	XG.2001.69-1	1634-04-4	Methyl t-butyl ether (MTBE)	ND	mg / Kg	1	0.005		01/18/01
X0127	XG.2001.69-1	75-09-2	Methylene chloride	ND	mg / Kg	1	0.05		01/18/01
X0127	XG.2001.69-1	91-20-3	Naphthalene	ND	mg / Kg	1	0.025		01/18/01
	XG.2001.69-1	95-47-6	o-Xylene	ND	mg / Kg	1	0.005		01/18/01
	XG.2001.69-1	108-38-3/106-42	p/m Xylenes	ND	mg / Kg	1	0.01		01/18/01
X0127	XG.2001.69-1	100-42-5	Styrene	ND	mg / Kg	1	0.005		01/18/01
X0127	XG.2001.69-1	156-60-5	t-1,2 Dichloroethene	ND	mg / Kg	1	0.005		01/18/01
X0127	XG.2001.69-1	10061-02-6	t-1,3 Dichloropropene	ND	mg / Kg	1	0.005		01/18/01
X0127	XG.2001.69-1	127-18-4	Tetrachloroethene	ND	mg / Kg	1	0.005		01/18/01
X0127	XG.2001.69-1	108-88-3	Toluene	ND	mg / Kg	1	0.005		01/18/01
X0127	XG.2001.69-1	79-01-6	Trichloroethene	ND	mg / Kg	1	0.005		01/18/01
X0127	XG.2001.69-1	75-69-4	Trichlorofluoromethane	ND	mg / Kg	1	0.025		01/18/01
X0127	XG.2001.69-1	108-05-4	Vinyl acetate	ND	mg / Kg	1	0.025		01/18/01
X0127	XG.2001.69-1	75-01-4	Vinyl chloride	ND	mg / Kg	1	0.025		01/18/01

X0127-011 **SW846 8260A Purgeable VOCs by GC/MS**

X0127	XG.2001.80-1	75-34-3	1,1 Dichloroethane	ND	mg / Kg	1	0.005		01/22/01
X0127	XG.2001.80-1	75-34-3	1,1 Dichloroethene	ND	mg / Kg	1	0.005		01/22/01
X0127	XG.2001.80-1	71-55-6	1,1,1 Trichloroethane	ND	mg / Kg	1	0.005		01/22/01
X0127	XG.2001.80-1	630-20-6	1,1,1,2 Tetrachloroethane	ND	mg / Kg	1	0.005		01/22/01
X0127	XG.2001.80-1	79-00-5	1,1,2 Trichloroethane	ND	mg / Kg	1	0.005		01/22/01
X0127	XG.2001.80-1	79-34-5	1,1,2,2 Tetrachloroethane	ND	mg / Kg	1	0.005		01/22/01
X0127	XG.2001.80-1	106-93-4	1,2 Dibromoethane (EDB)	ND	mg / Kg	1	0.005		01/22/01
X0127	XG.2001.80-1	95-50-1	1,2 Dichlorobenzene	ND	mg / Kg	1	0.005		01/22/01
X0127	XG.2001.80-1	107-06-2	1,2 Dichloroethane	ND	mg / Kg	1	0.005		01/22/01
X0127	XG.2001.80-1	78-87-5	1,2 Dichloropropane	ND	mg / Kg	1	0.005		01/22/01
X0127	XG.2001.80-1	96-18-4	1,2,3 Trichloropropane	ND	mg / Kg	1	0.005		01/22/01
X0127	XG.2001.80-1	95-63-6	1,2,4-Trimethylbenzene	ND	mg / Kg	1	0.005		01/22/01
X0127	XG.2001.80-1	541-73-1	1,3 Dichlorobenzene	ND	mg / Kg	1	0.005		01/22/01
	XG.2001.80-1	108-67-8	1,3,5-Trimethylbenzene	ND	mg / Kg	1	0.005		01/22/01

Quality Control Summary

Client: **CH2MHILL**

Project: **0102050** **160660.02.FF.SA**

Explanation of codes	
D	*Not applicable due to sample dilut*
L	*Not applicable due to MDL proxim*

X0127	XG.2001.80-1	764-41-0	1,4 Dichloro-2-butene	ND	mg / Kg	1	0.05		01/22/01
X0127	XG.2001.80-1	106-46-7	1,4 Dichlorobenzene	ND	mg / Kg	1	0.005		01/22/01
X0127	XG.2001.80-1	78-93-3	2-Butanone (MEK)	ND	mg / Kg	1	0.025		01/22/01
X0127	XG.2001.80-1	110-75-8	2-Chloroethylvinylether	ND	mg / Kg	1	0.025		01/22/01
X0127	XG.2001.80-1	591-78-6	2-Hexanone (MBK)	ND	mg / Kg	1	0.025		01/22/01
X0127	XG.2001.80-1	108-10-1	4-Methyl-2-pentanone (MIBK)	ND	mg / Kg	1	0.025		01/22/01
X0127	XG.2001.80-1	67-64-1	Acetone	ND	mg / Kg	1	0.05		01/22/01
X0127	XG.2001.80-1	107-02-8	Acrolein	ND	mg / Kg	1	0.1		01/22/01
X0127	XG.2001.80-1	107-13-1	Acrylonitrile	ND	mg / Kg	1	0.1		01/22/01
X0127	XG.2001.80-1	71-43-2	Benzene	ND	mg / Kg	1	0.005		01/22/01
X0127	XG.2001.80-1	75-27-4	Bromodichloromethane	ND	mg / Kg	1	0.005		01/22/01
X0127	XG.2001.80-1	75-25-2	Bromoform	ND	mg / Kg	1	0.005		01/22/01
X0127	XG.2001.80-1	74-83-9	Bromomethane	ND	mg / Kg	1	0.025		01/22/01
X0127	XG.2001.80-1	75-15-0	Carbon disulfide	ND	mg / Kg	1	0.025		01/22/01
X0127	XG.2001.80-1	56-23-5	Carbon tetrachloride	ND	mg / Kg	1	0.005		01/22/01
X0127	XG.2001.80-1	108-90-7	Chlorobenzene	ND	mg / Kg	1	0.005		01/22/01
X0127	XG.2001.80-1	124-48-1	Chlorodibromomethane	ND	mg / Kg	1	0.005		01/22/01
X0127	XG.2001.80-1	75-00-3	Chloroethane	ND	mg / Kg	1	0.025		01/22/01
X0127	XG.2001.80-1	67-66-3	Chloroform	ND	mg / Kg	1	0.005		01/22/01
X0127	XG.2001.80-1	74-87-3	Chloromethane	ND	mg / Kg	1	0.025		01/22/01
X0127	XG.2001.80-1	156-59-2	cis-1,2 dichloroethene	ND	mg / Kg	1	0.005		01/22/01
X0127	XG.2001.80-1	10061-01-5	cis-1,3 dichloropropene	ND	mg / Kg	1	0.005		01/22/01
X0127	XG.2001.80-1	74-95-3	Dibromomethane	ND	mg / Kg	1	0.005		01/22/01
X0127	XG.2001.80-1	97-63-2	Ethyl methacrylate	ND	mg / Kg	1	0.025		01/22
X0127	XG.2001.80-1	100-41-4	Ethylbenzene	ND	mg / Kg	1	0.005		01/22
X0127	XG.2001.80-1		Freon 113	ND	mg / Kg	1	0.025		01/22/01
X0127	XG.2001.80-1	75-71-8	Freon 12	ND	mg / Kg	1	0.05		01/22/01
X0127	XG.2001.80-1	74-88-4	Iodomethane	ND	mg / Kg	1	0.025		01/22/01
X0127	XG.2001.80-1	1634-04-4	Methyl t-butyl ether (MTBE)	ND	mg / Kg	1	0.005		01/22/01
X0127	XG.2001.80-1	75-09-2	Methylene chloride	ND	mg / Kg	1	0.05		01/22/01
X0127	XG.2001.80-1	91-20-3	Naphthalene	ND	mg / Kg	1	0.025		01/22/01
X0127	XG.2001.80-1	95-47-6	o-Xylene	ND	mg / Kg	1	0.005		01/22/01
X0127	XG.2001.80-1	108-38-3/106-42	p/m Xylenes	ND	mg / Kg	1	0.01		01/22/01
X0127	XG.2001.80-1	100-42-5	Styrene	ND	mg / Kg	1	0.005		01/22/01
X0127	XG.2001.80-1	156-60-5	t-1,2 Dichloroethene	ND	mg / Kg	1	0.005		01/22/01
X0127	XG.2001.80-1	10061-02-6	t-1,3 Dichloropropene	ND	mg / Kg	1	0.005		01/22/01
X0127	XG.2001.80-1	127-18-4	Tetrachloroethene	ND	mg / Kg	1	0.005		01/22/01
X0127	XG.2001.80-1	108-88-3	Toluene	ND	mg / Kg	1	0.005		01/22/01
X0127	XG.2001.80-1	79-01-6	Trichloroethene	ND	mg / Kg	1	0.005		01/22/01
X0127	XG.2001.80-1	75-69-4	Trichlorofluoromethane	ND	mg / Kg	1	0.025		01/22/01
X0127	XG.2001.80-1	108-05-4	Vinyl acetate	ND	mg / Kg	1	0.025		01/22/01
X0127	XG.2001.80-1	75-01-4	Vinyl chloride	ND	mg / Kg	1	0.025		01/22/01
X0127-014		**SW846 8260A Purgeable VOCs by GC/MS**							
X0127	XG.2001.80-3	75-34-3	1,1 Dichloroethane	ND	mg / Kg	1	0.005		01/22/01
X0127	XG.2001.80-3	75-34-3	1,1 Dichloroethene	ND	mg / Kg	1	0.005		01/22/01
X0127	XG.2001.80-3	71-55-6	1,1,1 Trichloroethane	ND	mg / Kg	1	0.005		01/22/01
X0127	XG.2001.80-3	630-20-6	1,1,1,2 Tetrachloroethane	ND	mg / Kg	1	0.005		01/22/01
X0127	XG.2001.80-3	79-00-5	1,1,2 Trichloroethane	ND	mg / Kg	1	0.005		01/22/01
X0127	XG.2001.80-3	79-34-5	1,1,2,2 Tetrachloroethane	ND	mg / Kg	1	0.005		01/22

Quality Control Summary

Client: **CH2MHILL**

Project: **0102050** **160660.02.FF.SA**

Explanation of codes	
D	*Not applicable due to sample dilution*
L	*Not applicable due to MDL proximity*

X0127	XG.2001.80-3	106-93-4	1,2 Dibromoethane (EDB)	ND	mg / Kg	1	0.005		01/22/01
X0127	XG.2001.80-3	95-50-1	1,2 Dichlorobenzene	ND	mg / Kg	1	0.005		01/22/01
X0127	XG.2001.80-3	107-06-2	1,2 Dichloroethane	ND	mg / Kg	1	0.005		01/22/01
X0127	XG.2001.80-3	78-87-5	1,2 Dichloropropane	ND	mg / Kg	1	0.005		01/22/01
X0127	XG.2001.80-3	96-18-4	1,2,3 Trichloropropane	ND	mg / Kg	1	0.005		01/22/01
X0127	XG.2001.80-3	95-63-6	1,2,4-Trimethylbenzene	ND	mg / Kg	1	0.005		01/22/01
X0127	XG.2001.80-3	541-73-1	1,3 Dichlorobenzene	ND	mg / Kg	1	0.005		01/22/01
X0127	XG.2001.80-3	108-67-8	1,3,5-Trimethylbenzene	ND	mg / Kg	1	0.005		01/22/01
X0127	XG.2001.80-3	764-41-0	1,4 Dichloro-2-butene	ND	mg / Kg	1	0.05		01/22/01
X0127	XG.2001.80-3	106-46-7	1,4 Dichlorobenzene	ND	mg / Kg	1	0.005		01/22/01
X0127	XG.2001.80-3	78-93-3	2-Butanone (MEK)	ND	mg / Kg	1	0.025		01/22/01
X0127	XG.2001.80-3	110-75-8	2-Chloroethylvinylether	ND	mg / Kg	1	0.025		01/22/01
X0127	XG.2001.80-3	591-78-6	2-Hexanone (MBK)	ND	mg / Kg	1	0.025		01/22/01
X0127	XG.2001.80-3	108-10-1	4-Methyl-2-pentanone (MIBK)	ND	mg / Kg	1	0.025		01/22/01
X0127	XG.2001.80-3	67-64-1	Acetone	ND	mg / Kg	1	0.05		01/22/01
X0127	XG.2001.80-3	107-02-8	Acrolein	ND	mg / Kg	1	0.1		01/22/01
X0127	XG.2001.80-3	107-13-1	Acrylonitrile	ND	mg / Kg	1	0.1		01/22/01
X0127	XG.2001.80-3	71-43-2	Benzene	ND	mg / Kg	1	0.005		01/22/01
X0127	XG.2001.80-3	75-27-4	Bromodichloromethane	ND	mg / Kg	1	0.005		01/22/01
X0127	XG.2001.80-3	75-25-2	Bromoform	ND	mg / Kg	1	0.005		01/22/01
X0127	XG.2001.80-3	74-83-9	Bromomethane	ND	mg / Kg	1	0.025		01/22/01
X0127	XG.2001.80-3	75-15-0	Carbon disulfide	ND	mg / Kg	1	0.025		01/22/01
X0127	XG.2001.80-3	56-23-5	Carbon tetrachloride	ND	mg / Kg	1	0.005		01/22/01
[illegible]	XG.2001.80-3	108-90-7	Chlorobenzene	ND	mg / Kg	1	0.005		01/22/01
[illegible]	XG.2001.80-3	124-48-1	Chlorodibromomethane	ND	mg / Kg	1	0.005		01/22/01
X0127	XG.2001.80-3	75-00-3	Chloroethane	ND	mg / Kg	1	0.025		01/22/01
X0127	XG.2001.80-3	67-66-3	Chloroform	ND	mg / Kg	1	0.005		01/22/01
X0127	XG.2001.80-3	74-87-3	Chloromethane	ND	mg / Kg	1	0.025		01/22/01
X0127	XG.2001.80-3	156-59-2	cis-1,2 dichloroethene	ND	mg / Kg	1	0.005		01/22/01
X0127	XG.2001.80-3	10061-01-5	cis-1,3 dichloropropene	ND	mg / Kg	1	0.005		01/22/01
X0127	XG.2001.80-3	74-95-3	Dibromomethane	ND	mg / Kg	1	0.005		01/22/01
X0127	XG.2001.80-3	97-63-2	Ethyl methacrylate	ND	mg / Kg	1	0.025		01/22/01
X0127	XG.2001.80-3	100-41-4	Ethylbenzene	ND	mg / Kg	1	0.005		01/22/01
X0127	XG.2001.80-3		Freon 113	ND	mg / Kg	1	0.025		01/22/01
X0127	XG.2001.80-3	75-71-8	Freon 12	ND	mg / Kg	1	0.05		01/22/01
X0127	XG.2001.80-3	74-88-4	Iodomethane	ND	mg / Kg	1	0.025		01/22/01
X0127	XG.2001.80-3	1634-04-4	Methyl t-butyl ether (MTBE)	ND	mg / Kg	1	0.005		01/22/01
X0127	XG.2001.80-3	75-09-2	Methylene chloride	ND	mg / Kg	1	0.05		01/22/01
X0127	XG.2001.80-3	91-20-3	Naphthalene	ND	mg / Kg	1	0.025		01/22/01
X0127	XG.2001.80-3	95-47-6	o-Xylene	ND	mg / Kg	1	0.005		01/22/01
X0127	XG.2001.80-3	108-38-3/106-42	p/m Xylenes	ND	mg / Kg	1	0.01		01/22/01
X0127	XG.2001.80-3	100-42-5	Styrene	ND	mg / Kg	1	0.005		01/22/01
X0127	XG.2001.80-3	156-60-5	t-1,2 Dichloroethene	ND	mg / Kg	1	0.005		01/22/01
X0127	XG.2001.80-3	10061-02-6	t-1,3 Dichloropropene	ND	mg / Kg	1	0.005		01/22/01
X0127	XG.2001.80-3	127-18-4	Tetrachloroethene	ND	mg / Kg	1	0.005		01/22/01
X0127	XG.2001.80-3	108-88-3	Toluene	ND	mg / Kg	1	0.005		01/22/01
X0127	XG.2001.80-3	79-01-6	Trichloroethene	ND	mg / Kg	1	0.005		01/22/01
X0127	XG.2001.80-3	75-69-4	Trichlorofluoromethane	ND	mg / Kg	1	0.025		01/22/01
[illegible]	XG.2001.80-3	108-05-4	Vinyl acetate	ND	mg / Kg	1	0.025		01/22/01
[illegible]	XG.2001.80-3	75-01-4	Vinyl chloride	ND	mg / Kg	1	0.025		01/22/01

Quality Control Summary

Explanation of codes	
D	*Not applicable due to sample dilut*
L	*Not applicable due to MDL proximi*

Client: **CH2MHILL**

Project: **0102050** **160660.02.FF.SA**

X0127-016 **SW846 8260A Purgeable VOCs by GC/MS**

X0127	XG.2001.117-1	75-34-3	1,1 Dichloroethane	ND	mg / Kg	1	0.005	01/25/0
X0127	XG.2001.117-1	75-34-3	1,1 Dichloroethene	ND	mg / Kg	1	0.005	01/25/0
X0127	XG.2001.117-1	71-55-6	1,1,1 Trichloroethane	ND	mg / Kg	1	0.005	01/25/0
X0127	XG.2001.117-1	630-20-6	1,1,1,2 Tetrachloroethane	ND	mg / Kg	1	0.005	01/25/0
X0127	XG.2001.117-1	79-00-5	1,1,2 Trichloroethane	ND	mg / Kg	1	0.005	01/25/0
X0127	XG.2001.117-1	79-34-5	1,1,2,2 Tetrachloroethane	ND	mg / Kg	1	0.005	01/25/0
X0127	XG.2001.117-1	106-93-4	1,2 Dibromoethane (EDB)	ND	mg / Kg	1	0.005	01/25/0
X0127	XG.2001.117-1	95-50-1	1,2 Dichlorobenzene	ND	mg / Kg	1	0.005	01/25/0
X0127	XG.2001.117-1	107-06-2	1,2 Dichloroethane	ND	mg / Kg	1	0.005	01/25/0
X0127	XG.2001.117-1	78-87-5	1,2 Dichloropropane	ND	mg / Kg	1	0.005	01/25/0
X0127	XG.2001.117-1	96-18-4	1,2,3 Trichloropropane	ND	mg / Kg	1	0.005	01/25/0
X0127	XG.2001.117-1	95-63-6	1,2,4-Trimethylbenzene	ND	mg / Kg	1	0.005	01/25/0
X0127	XG.2001.117-1	541-73-1	1,3 Dichlorobenzene	ND	mg / Kg	1	0.005	01/25/0
X0127	XG.2001.117-1	108-67-8	1,3,5-Trimethylbenzene	ND	mg / Kg	1	0.005	01/25/0
X0127	XG.2001.117-1	764-41-0	1,4 Dichloro-2-butene	ND	mg / Kg	1	0.05	01/25/0
X0127	XG.2001.117-1	106-46-7	1,4 Dichlorobenzene	ND	mg / Kg	1	0.005	01/25/0
X0127	XG.2001.117-1	78-93-3	2-Butanone (MEK)	ND	mg / Kg	1	0.025	01/25/0
X0127	XG.2001.117-1	110-75-8	2-Chloroethylvinylether	ND	mg / Kg	1	0.025	01/25/0
X0127	XG.2001.117-1	591-78-6	2-Hexanone (MBK)	ND	mg / Kg	1	0.025	01/25/0
X0127	XG.2001.117-1	108-10-1	4-Methyl-2-pentanone (MIBK)	ND	mg / Kg	1	0.025	01/25/0
X0127	XG.2001.117-1	67-64-1	Acetone	ND	mg / Kg	1	0.05	01/25/0
X0127	XG.2001.117-1	107-02-8	Acrolein	ND	mg / Kg	1	0.1	01/25/0
X0127	XG.2001.117-1	107-13-1	Acrylonitrile	ND	mg / Kg	1	0.1	01/25
X0127	XG.2001.117-1	71-43-2	Benzene	ND	mg / Kg	1	0.005	01/25/0
X0127	XG.2001.117-1	75-27-4	Bromodichloromethane	ND	mg / Kg	1	0.005	01/25/0
X0127	XG.2001.117-1	75-25-2	Bromoform	ND	mg / Kg	1	0.005	01/25/0
X0127	XG.2001.117-1	74-83-9	Bromomethane	ND	mg / Kg	1	0.025	01/25/0
X0127	XG.2001.117-1	75-15-0	Carbon disulfide	ND	mg / Kg	1	0.025	01/25/0
X0127	XG.2001.117-1	56-23-5	Carbon tetrachloride	ND	mg / Kg	1	0.005	01/25/0
X0127	XG.2001.117-1	108-90-7	Chlorobenzene	ND	mg / Kg	1	0.005	01/25/0
X0127	XG.2001.117-1	124-48-1	Chlorodibromomethane	ND	mg / Kg	1	0.005	01/25/0
X0127	XG.2001.117-1	75-00-3	Chloroethane	ND	mg / Kg	1	0.025	01/25/0
X0127	XG.2001.117-1	67-66-3	Chloroform	ND	mg / Kg	1	0.005	01/25/0
X0127	XG.2001.117-1	74-87-3	Chloromethane	ND	mg / Kg	1	0.025	01/25/0
X0127	XG.2001.117-1	156-59-2	cis-1,2 dichloroethene	ND	mg / Kg	1	0.005	01/25/0
X0127	XG.2001.117-1	10061-01-5	cis-1,3 dichloropropene	ND	mg / Kg	1	0.005	01/25/0
X0127	XG.2001.117-1	74-95-3	Dibromomethane	ND	mg / Kg	1	0.005	01/25/0
X0127	XG.2001.117-1	97-63-2	Ethyl methacrylate	ND	mg / Kg	1	0.025	01/25/0
X0127	XG.2001.117-1	100-41-4	Ethylbenzene	ND	mg / Kg	1	0.005	01/25/0
X0127	XG.2001.117-1		Freon 113	ND	mg / Kg	1	0.025	01/25/0
X0127	XG.2001.117-1	75-71-8	Freon 12	ND	mg / Kg	1	0.05	01/25/0
X0127	XG.2001.117-1	74-88-4	Iodomethane	ND	mg / Kg	1	0.025	01/25/0
X0127	XG.2001.117-1	1634-04-4	Methyl t-butyl ether (MTBE)	ND	mg / Kg	1	0.005	01/25/0
X0127	XG.2001.117-1	75-09-2	Methylene chloride	ND	mg / Kg	1	0.05	01/25/0
X0127	XG.2001.117-1	91-20-3	Naphthalene	ND	mg / Kg	1	0.025	01/25/0
X0127	XG.2001.117-1	95-47-6	o-Xylene	ND	mg / Kg	1	0.005	01/25/0
X0127	XG.2001.117-1	108-38-3/106-42	p/m Xylenes	ND	mg / Kg	1	0.01	01/25/0
X0127	XG.2001.117-1	100-42-5	Styrene	ND	mg / Kg	1	0.005	01/25

Quality Control Summary

Explanation of codes

D	*Not applicable due to sample dilution*
L	*Not applicable due to MDL proximity*

C[illegible]t: **CH2MHILL**

P[illegible]ct: **0102050** **160660.02.FF.SA**

X0127	XG.2001.117-1	156-60-5	t-1,2 Dichloroethene	ND	mg / Kg	1	0.005		01/25/01
X0127	XG.2001.117-1	10061-02-6	t-1,3 Dichloropropene	ND	mg / Kg	1	0.005		01/25/01
X0127	XG.2001.117-1	127-18-4	Tetrachloroethene	ND	mg / Kg	1	0.005		01/25/01
X0127	XG.2001.117-1	108-88-3	Toluene	ND	mg / Kg	1	0.005		01/25/01
X0127	XG.2001.117-1	79-01-6	Trichloroethene	ND	mg / Kg	1	0.005		01/25/01
X0127	XG.2001.117-1	75-69-4	Trichlorofluoromethane	ND	mg / Kg	1	0.025		01/25/01
X0127	XG.2001.117-1	108-05-4	Vinyl acetate	ND	mg / Kg	1	0.025		01/25/01
X0127	XG.2001.117-1	75-01-4	Vinyl chloride	ND	mg / Kg	1	0.025		01/25/01
X0127-019		**SW846 8260A Purgeable VOCs by GC/MS**							
X0127	XG.2001.124-1	75-34-3	1,1 Dichloroethane	ND	mg / Kg	1	0.005		01/29/01
X0127	XG.2001.124-1	75-34-3	1,1 Dichloroethene	ND	mg / Kg	1	0.005		01/29/01
X0127	XG.2001.124-1	71-55-6	1,1,1 Trichloroethane	ND	mg / Kg	1	0.005		01/29/01
X0127	XG.2001.124-1	630-20-6	1,1,1,2 Tetrachloroethane	ND	mg / Kg	1	0.005		01/29/01
X0127	XG.2001.124-1	79-00-5	1,1,2 Trichloroethane	ND	mg / Kg	1	0.005		01/29/01
X0127	XG.2001.124-1	79-34-5	1,1,2,2 Tetrachloroethane	ND	mg / Kg	1	0.005		01/29/01
X0127	XG.2001.124-1	106-93-4	1,2 Dibromoethane (EDB)	ND	mg / Kg	1	0.005		01/29/01
X0127	XG.2001.124-1	95-50-1	1,2 Dichlorobenzene	ND	mg / Kg	1	0.005		01/29/01
X0127	XG.2001.124-1	107-06-2	1,2 Dichloroethane	ND	mg / Kg	1	0.005		01/29/01
X0127	XG.2001.124-1	78-87-5	1,2 Dichloropropane	ND	mg / Kg	1	0.005		01/29/01
X0127	XG.2001.124-1	96-18-4	1,2,3 Trichloropropane	ND	mg / Kg	1	0.005		01/29/01
X0127	XG.2001.124-1	95-63-6	1,2,4-Trimethylbenzene	ND	mg / Kg	1	0.005		01/29/01
X0127	XG.2001.124-1	541-73-1	1,3 Dichlorobenzene	ND	mg / Kg	1	0.005		01/29/01
X[illegible]	XG.2001.124-1	108-67-8	1,3,5-Trimethylbenzene	ND	mg / Kg	1	0.005		01/29/01
[illegible]	XG.2001.124-1	764-41-0	1,4 Dichloro-2-butene	ND	mg / Kg	1	0.05		01/29/01
X0127	XG.2001.124-1	106-46-7	1,4 Dichlorobenzene	ND	mg / Kg	1	0.005		01/29/01
X0127	XG.2001.124-1	78-93-3	2-Butanone (MEK)	ND	mg / Kg	1	0.025		01/29/01
X0127	XG.2001.124-1	110-75-8	2-Chloroethylvinylether	ND	mg / Kg	1	0.025		01/29/01
X0127	XG.2001.124-1	591-78-6	2-Hexanone (MBK)	ND	mg / Kg	1	0.025		01/29/01
X0127	XG.2001.124-1	108-10-1	4-Methyl-2-pentanone (MIBK)	ND	mg / Kg	1	0.025		01/29/01
X0127	XG.2001.124-1	67-64-1	Acetone	ND	mg / Kg	1	0.05		01/29/01
X0127	XG.2001.124-1	107-02-8	Acrolein	ND	mg / Kg	1	0.1		01/29/01
X0127	XG.2001.124-1	107-13-1	Acrylonitrile	ND	mg / Kg	1	0.1		01/29/01
X0127	XG.2001.124-1	71-43-2	Benzene	ND	mg / Kg	1	0.005		01/29/01
X0127	XG.2001.124-1	75-27-4	Bromodichloromethane	ND	mg / Kg	1	0.005		01/29/01
X0127	XG.2001.124-1	75-25-2	Bromoform	ND	mg / Kg	1	0.005		01/29/01
X0127	XG.2001.124-1	74-83-9	Bromomethane	ND	mg / Kg	1	0.025		01/29/01
X0127	XG.2001.124-1	75-15-0	Carbon disulfide	ND	mg / Kg	1	0.025		01/29/01
X0127	XG.2001.124-1	56-23-5	Carbon tetrachloride	ND	mg / Kg	1	0.005		01/29/01
X0127	XG.2001.124-1	108-90-7	Chlorobenzene	ND	mg / Kg	1	0.005		01/29/01
X0127	XG.2001.124-1	124-48-1	Chlorodibromomethane	ND	mg / Kg	1	0.005		01/29/01
X0127	XG.2001.124-1	75-00-3	Chloroethane	ND	mg / Kg	1	0.025		01/29/01
X0127	XG.2001.124-1	67-66-3	Chloroform	ND	mg / Kg	1	0.005		01/29/01
X0127	XG.2001.124-1	74-87-3	Chloromethane	ND	mg / Kg	1	0.025		01/29/01
X0127	XG.2001.124-1	156-59-2	cis-1,2 dichloroethene	ND	mg / Kg	1	0.005		01/29/01
X0127	XG.2001.124-1	10061-01-5	cis-1,3 dichloropropene	ND	mg / Kg	1	0.005		01/29/01
X0127	XG.2001.124-1	74-95-3	Dibromomethane	ND	mg / Kg	1	0.005		01/29/01
X0127	XG.2001.124-1	97-63-2	Ethyl methacrylate	ND	mg / Kg	1	0.025		01/29/01
X0127	XG.2001.124-1	100-41-4	Ethylbenzene	ND	mg / Kg	1	0.005		01/29/01
[illegible]	XG.2001.124-1		Freon 113	ND	mg / Kg	1	0.025		01/29/01
[illegible]	XG.2001.124-1	75-71-8	Freon 12	ND	mg / Kg	1	0.05		01/29/01

Quality Control Summary

Client: **CH2MHILL**

Project: **0102050** **160660.02.FF.SA**

Explanation of codes	
D	*Not applicable due to sample dilut*
L	*Not applicable due to MDL proxim*

X0127	XG.2001.124-1	74-88-4	Iodomethane	ND	mg / Kg	1	0.025		01/29/01
X0127	XG.2001.124-1	1634-04-4	Methyl t-butyl ether (MTBE)	ND	mg / Kg	1	0.005		01/29/01
X0127	XG.2001.124-1	75-09-2	Methylene chloride	ND	mg / Kg	1	0.05		01/29/01
X0127	XG.2001.124-1	91-20-3	Naphthalene	ND	mg / Kg	1	0.025		01/29/01
X0127	XG.2001.124-1	95-47-6	o-Xylene	ND	mg / Kg	1	0.005		01/29/01
X0127	XG.2001.124-1	108-38-3/106-42	p/m Xylenes	ND	mg / Kg	1	0.01		01/29/01
X0127	XG.2001.124-1	100-42-5	Styrene	ND	mg / Kg	1	0.005		01/29/01
X0127	XG.2001.124-1	156-60-5	t-1,2 Dichloroethene	ND	mg / Kg	1	0.005		01/29/01
X0127	XG.2001.124-1	10061-02-6	t-1,3 Dichloropropene	ND	mg / Kg	1	0.005		01/29/01
X0127	XG.2001.124-1	127-18-4	Tetrachloroethene	ND	mg / Kg	1	0.005		01/29/01
X0127	XG.2001.124-1	108-88-3	Toluene	ND	mg / Kg	1	0.005		01/29/01
X0127	XG.2001.124-1	79-01-6	Trichloroethene	ND	mg / Kg	1	0.005		01/29/01
X0127	XG.2001.124-1	75-69-4	Trichlorofluoromethane	ND	mg / Kg	1	0.025		01/29/01
X0127	XG.2001.124-1	108-05-4	Vinyl acetate	ND	mg / Kg	1	0.025		01/29/01
X0127	XG.2001.124-1	75-01-4	Vinyl chloride	ND	mg / Kg	1	0.025		01/29/01

X0127-021 **SW846 8260A Purgeable VOCs by GC/MS**

X0127	XG.2001.132-1	75-34-3	1,1 Dichloroethane	ND	mg / Kg	1	0.005		01/30/01
X0127	XG.2001.132-1	75-34-3	1,1 Dichloroethene	ND	mg / Kg	1	0.005		01/30/01
X0127	XG.2001.132-1	71-55-6	1,1,1 Trichloroethane	ND	mg / Kg	1	0.005		01/30/01
X0127	XG.2001.132-1	630-20-6	1,1,1,2 Tetrachloroethane	ND	mg / Kg	1	0.005		01/30/01
X0127	XG.2001.132-1	79-00-5	1,1,2 Trichloroethane	ND	mg / Kg	1	0.005		01/30/01
X0127	XG.2001.132-1	79-34-5	1,1,2,2 Tetrachloroethane	ND	mg / Kg	1	0.005		01/30/01
X0127	XG.2001.132-1	106-93-4	1,2 Dibromoethane (EDB)	ND	mg / Kg	1	0.005		01/30
X0127	XG.2001.132-1	95-50-1	1,2 Dichlorobenzene	ND	mg / Kg	1	0.005		01/30
X0127	XG.2001.132-1	107-06-2	1,2 Dichloroethane	ND	mg / Kg	1	0.005		01/30/01
X0127	XG.2001.132-1	78-87-5	1,2 Dichloropropane	ND	mg / Kg	1	0.005		01/30/01
X0127	XG.2001.132-1	96-18-4	1,2,3 Trichloropropane	ND	mg / Kg	1	0.005		01/30/01
X0127	XG.2001.132-1	95-63-6	1,2,4-Trimethylbenzene	ND	mg / Kg	1	0.005		01/30/01
X0127	XG.2001.132-1	541-73-1	1,3 Dichlorobenzene	ND	mg / Kg	1	0.005		01/30/01
X0127	XG.2001.132-1	108-67-8	1,3,5-Trimethylbenzene	ND	mg / Kg	1	0.005		01/30/01
X0127	XG.2001.132-1	764-41-0	1,4 Dichloro-2-butene	ND	mg / Kg	1	0.05		01/30/01
X0127	XG.2001.132-1	106-46-7	1,4 Dichlorobenzene	ND	mg / Kg	1	0.005		01/30/01
X0127	XG.2001.132-1	78-93-3	2-Butanone (MEK)	ND	mg / Kg	1	0.025		01/30/01
X0127	XG.2001.132-1	110-75-8	2-Chloroethylvinylether	ND	mg / Kg	1	0.025		01/30/01
X0127	XG.2001.132-1	591-78-6	2-Hexanone (MBK)	ND	mg / Kg	1	0.025		01/30/01
X0127	XG.2001.132-1	108-10-1	4-Methyl-2-pentanone (MIBK)	ND	mg / Kg	1	0.025		01/30/01
X0127	XG.2001.132-1	67-64-1	Acetone	ND	mg / Kg	1	0.05		01/30/01
X0127	XG.2001.132-1	107-02-8	Acrolein	ND	mg / Kg	1	0.1		01/30/01
X0127	XG.2001.132-1	107-13-1	Acrylonitrile	ND	mg / Kg	1	0.1		01/30/01
X0127	XG.2001.132-1	71-43-2	Benzene	ND	mg / Kg	1	0.005		01/30/01
X0127	XG.2001.132-1	75-27-4	Bromodichloromethane	ND	mg / Kg	1	0.005		01/30/01
X0127	XG.2001.132-1	75-25-2	Bromoform	ND	mg / Kg	1	0.005		01/30/01
X0127	XG.2001.132-1	74-83-9	Bromomethane	ND	mg / Kg	1	0.025		01/30/01
X0127	XG.2001.132-1	75-15-0	Carbon disulfide	ND	mg / Kg	1	0.025		01/30/01
X0127	XG.2001.132-1	56-23-5	Carbon tetrachloride	ND	mg / Kg	1	0.005		01/30/01
X0127	XG.2001.132-1	108-90-7	Chlorobenzene	ND	mg / Kg	1	0.005		01/30/01
X0127	XG.2001.132-1	124-48-1	Chlorodibromomethane	ND	mg / Kg	1	0.005		01/30/01
X0127	XG.2001.132-1	75-00-3	Chloroethane	ND	mg / Kg	1	0.025		01/30/01
X0127	XG.2001.132-1	67-66-3	Chloroform	ND	mg / Kg	1	0.005		01/30

Quality Control Summary

Explanation of codes	
D	*Not applicable due to sample dilution*
L	*Not applicable due to MDL proximity*

Client: **CH2MHILL**

Project: **0102050** **160660.02.FF.SA**

X0127	XG.2001.132-1	74-87-3	Chloromethane	ND	mg / Kg	1	0.025		01/30/01
X0127	XG.2001.132-1	156-59-2	cis-1,2 dichloroethene	ND	mg / Kg	1	0.005		01/30/01
X0127	XG.2001.132-1	10061-01-5	cis-1,3 dichloropropene	ND	mg / Kg	1	0.005		01/30/01
X0127	XG.2001.132-1	74-95-3	Dibromomethane	ND	mg / Kg	1	0.005		01/30/01
X0127	XG.2001.132-1	97-63-2	Ethyl methacrylate	ND	mg / Kg	1	0.025		01/30/01
X0127	XG.2001.132-1	100-41-4	Ethylbenzene	ND	mg / Kg	1	0.005		01/30/01
X0127	XG.2001.132-1		Freon 113	ND	mg / Kg	1	0.025		01/30/01
X0127	XG.2001.132-1	75-71-8	Freon 12	ND	mg / Kg	1	0.05		01/30/01
X0127	XG.2001.132-1	74-88-4	Iodomethane	ND	mg / Kg	1	0.025		01/30/01
X0127	XG.2001.132-1	1634-04-4	Methyl t-butyl ether (MTBE)	ND	mg / Kg	1	0.005		01/30/01
X0127	XG.2001.132-1	75-09-2	Methylene chloride	ND	mg / Kg	1	0.05		01/30/01
X0127	XG.2001.132-1	91-20-3	Naphthalene	ND	mg / Kg	1	0.025		01/30/01
X0127	XG.2001.132-1	95-47-6	o-Xylene	ND	mg / Kg	1	0.005		01/30/01
X0127	XG.2001.132-1	108-38-3/106-42	p/m Xylenes	ND	mg / Kg	1	0.01		01/30/01
X0127	XG.2001.132-1	100-42-5	Styrene	ND	mg / Kg	1	0.005		01/30/01
X0127	XG.2001.132-1	156-60-5	t-1,2 Dichloroethene	ND	mg / Kg	1	0.005		01/30/01
X0127	XG.2001.132-1	10061-02-6	t-1,3 Dichloropropene	ND	mg / Kg	1	0.005		01/30/01
X0127	XG.2001.132-1	127-18-4	Tetrachloroethene	ND	mg / Kg	1	0.005		01/30/01
X0127	XG.2001.132-1	108-88-3	Toluene	ND	mg / Kg	1	0.005		01/30/01
X0127	XG.2001.132-1	79-01-6	Trichloroethene	ND	mg / Kg	1	0.005		01/30/01
X0127	XG.2001.132-1	75-69-4	Trichlorofluoromethane	ND	mg / Kg	1	0.025		01/30/01
X0127	XG.2001.132-1	108-05-4	Vinyl acetate	ND	mg / Kg	1	0.025		01/30/01
X0127	XG.2001.132-1	75-01-4	Vinyl chloride	ND	mg / Kg	1	0.025		01/30/01

[illegible]7-024 **SW846 8260A Purgeable VOCs by GC/MS**

X0127	XG.2001.157-2	75-34-3	1,1 Dichloroethane	ND	mg / Kg	1	0.005		02/01/01
X0127	XG.2001.157-2	75-34-3	1,1 Dichloroethene	ND	mg / Kg	1	0.005		02/01/01
X0127	XG.2001.157-2	71-55-6	1,1,1 Trichloroethane	ND	mg / Kg	1	0.005		02/01/01
X0127	XG.2001.157-2	630-20-6	1,1,1,2 Tetrachloroethane	ND	mg / Kg	1	0.005		02/01/01
X0127	XG.2001.157-2	79-00-5	1,1,2 Trichloroethane	ND	mg / Kg	1	0.005		02/01/01
X0127	XG.2001.157-2	79-34-5	1,1,2,2 Tetrachloroethane	ND	mg / Kg	1	0.005		02/01/01
X0127	XG.2001.157-2	106-93-4	1,2 Dibromoethane (EDB)	ND	mg / Kg	1	0.005		02/01/01
X0127	XG.2001.157-2	95-50-1	1,2 Dichlorobenzene	ND	mg / Kg	1	0.005		02/01/01
X0127	XG.2001.157-2	107-06-2	1,2 Dichloroethane	ND	mg / Kg	1	0.005		02/01/01
X0127	XG.2001.157-2	78-87-5	1,2 Dichloropropane	ND	mg / Kg	1	0.005		02/01/01
X0127	XG.2001.157-2	96-18-4	1,2,3 Trichloropropane	ND	mg / Kg	1	0.005		02/01/01
X0127	XG.2001.157-2	95-63-6	1,2,4-Trimethylbenzene	ND	mg / Kg	1	0.005		02/01/01
X0127	XG.2001.157-2	541-73-1	1,3 Dichlorobenzene	ND	mg / Kg	1	0.005		02/01/01
X0127	XG.2001.157-2	108-67-8	1,3,5-Trimethylbenzene	ND	mg / Kg	1	0.005		02/01/01
X0127	XG.2001.157-2	764-41-0	1,4 Dichloro-2-butene	ND	mg / Kg	1	0.05		02/01/01
X0127	XG.2001.157-2	106-46-7	1,4 Dichlorobenzene	ND	mg / Kg	1	0.005		02/01/01
X0127	XG.2001.157-2	78-93-3	2-Butanone (MEK)	ND	mg / Kg	1	0.025		02/01/01
X0127	XG.2001.157-2	110-75-8	2-Chloroethylvinylether	ND	mg / Kg	1	0.025		02/01/01
X0127	XG.2001.157-2	591-78-6	2-Hexanone (MBK)	ND	mg / Kg	1	0.025		02/01/01
X0127	XG.2001.157-2	108-10-1	4-Methyl-2-pentanone (MIBK)	ND	mg / Kg	1	0.025		02/01/01
X0127	XG.2001.157-2	67-64-1	Acetone	ND	mg / Kg	1	0.05		02/01/01
X0127	XG.2001.157-2	107-02-8	Acrolein	ND	mg / Kg	1	0.1		02/01/01
X0127	XG.2001.157-2	107-13-1	Acrylonitrile	ND	mg / Kg	1	0.1		02/01/01
X0127	XG.2001.157-2	71-43-2	Benzene	ND	mg / Kg	1	0.005		02/01/01
	XG.2001.157-2	75-27-4	Bromodichloromethane	ND	mg / Kg	1	0.005		02/01/01

Quality Control Summary

Explanation of codes	
D	*Not applicable due to sample dilut.*
L	*Not applicable due to MDL proximity*

Client: **CH2MHILL**

Project: **0102050** **160660.02.FF.SA**

X0127	XG.2001.157-2	75-25-2	Bromoform	ND	mg / Kg	1	0.005		02/01/0
X0127	XG.2001.157-2	74-83-9	Bromomethane	ND	mg / Kg	1	0.025		02/01/0
X0127	XG.2001.157-2	75-15-0	Carbon disulfide	ND	mg / Kg	1	0.025		02/01/0
X0127	XG.2001.157-2	56-23-5	Carbon tetrachloride	ND	mg / Kg	1	0.005		02/01/0
X0127	XG.2001.157-2	108-90-7	Chlorobenzene	ND	mg / Kg	1	0.005		02/01/0
X0127	XG.2001.157-2	124-48-1	Chlorodibromomethane	ND	mg / Kg	1	0.005		02/01/0
X0127	XG.2001.157-2	75-00-3	Chloroethane	ND	mg / Kg	1	0.025		02/01/0
X0127	XG.2001.157-2	67-66-3	Chloroform	ND	mg / Kg	1	0.005		02/01/0
X0127	XG.2001.157-2	74-87-3	Chloromethane	ND	mg / Kg	1	0.025		02/01/0
X0127	XG.2001.157-2	156-59-2	cis-1,2 dichloroethene	ND	mg / Kg	1	0.005		02/01/0
X0127	XG.2001.157-2	10061-01-5	cis-1,3 dichloropropene	ND	mg / Kg	1	0.005		02/01/0
X0127	XG.2001.157-2	74-95-3	Dibromomethane	ND	mg / Kg	1	0.005		02/01/0
X0127	XG.2001.157-2	97-63-2	Ethyl methacrylate	ND	mg / Kg	1	0.025		02/01/0
X0127	XG.2001.157-2	100-41-4	Ethylbenzene	ND	mg / Kg	1	0.005		02/01/0
X0127	XG.2001.157-2		Freon 113	ND	mg / Kg	1	0.025		02/01/0
X0127	XG.2001.157-2	75-71-8	Freon 12	ND	mg / Kg	1	0.05		02/01/01
X0127	XG.2001.157-2	74-88-4	Iodomethane	ND	mg / Kg	1	0.025		02/01/01
X0127	XG.2001.157-2	1634-04-4	Methyl t-butyl ether (MTBE)	ND	mg / Kg	1	0.005		02/01/01
X0127	XG.2001.157-2	75-09-2	Methylene chloride	ND	mg / Kg	1	0.05		02/01/01
X0127	XG.2001.157-2	91-20-3	Naphthalene	ND	mg / Kg	1	0.025		02/01/01
X0127	XG.2001.157-2	95-47-6	o-Xylene	ND	mg / Kg	1	0.005		02/01/01
X0127	XG.2001.157-2	108-38-3/106-42	p/m Xylenes	ND	mg / Kg	1	0.01		02/01/01
X0127	XG.2001.157-2	100-42-5	Styrene	ND	mg / Kg	1	0.005		02/01/
X0127	XG.2001.157-2	156-60-5	t-1,2 Dichloroethene	ND	mg / Kg	1	0.005		02/01/
X0127	XG.2001.157-2	10061-02-6	t-1,3 Dichloropropene	ND	mg / Kg	1	0.005		02/01/01
X0127	XG.2001.157-2	127-18-4	Tetrachloroethene	ND	mg / Kg	1	0.005		02/01/01
X0127	XG.2001.157-2	108-88-3	Toluene	ND	mg / Kg	1	0.005		02/01/01
X0127	XG.2001.157-2	79-01-6	Trichloroethene	ND	mg / Kg	1	0.005		02/01/01
X0127	XG.2001.157-2	75-69-4	Trichlorofluoromethane	ND	mg / Kg	1	0.025		02/01/01
X0127	XG.2001.157-2	108-05-4	Vinyl acetate	ND	mg / Kg	1	0.025		02/01/01
X0127	XG.2001.157-2	75-01-4	Vinyl chloride	ND	mg / Kg	1	0.025		02/01/01

X0127-028 **SW846 8260A Purgeable VOCs by GC/MS**

X0127	XG.2001.157-5	75-34-3	1,1 Dichloroethane	ND	mg / Kg	1	0.005		02/02/01
X0127	XG.2001.157-5	75-34-3	1,1 Dichloroethene	ND	mg / Kg	1	0.005		02/02/01
X0127	XG.2001.157-5	71-55-6	1,1,1 Trichloroethane	ND	mg / Kg	1	0.005		02/02/01
X0127	XG.2001.157-5	630-20-6	1,1,1,2 Tetrachloroethane	ND	mg / Kg	1	0.005		02/02/01
X0127	XG.2001.157-5	79-00-5	1,1,2 Trichloroethane	ND	mg / Kg	1	0.005		02/02/01
X0127	XG.2001.157-5	79-34-5	1,1,2,2 Tetrachloroethane	ND	mg / Kg	1	0.005		02/02/01
X0127	XG.2001.157-5	106-93-4	1,2 Dibromoethane (EDB)	ND	mg / Kg	1	0.005		02/02/01
X0127	XG.2001.157-5	95-50-1	1,2 Dichlorobenzene	ND	mg / Kg	1	0.005		02/02/01
X0127	XG.2001.157-5	107-06-2	1,2 Dichloroethane	ND	mg / Kg	1	0.005		02/02/01
X0127	XG.2001.157-5	78-87-5	1,2 Dichloropropane	ND	mg / Kg	1	0.005		02/02/01
X0127	XG.2001.157-5	96-18-4	1,2,3 Trichloropropane	ND	mg / Kg	1	0.005		02/02/01
X0127	XG.2001.157-5	95-63-6	1,2,4-Trimethylbenzene	ND	mg / Kg	1	0.005		02/02/01
X0127	XG.2001.157-5	541-73-1	1,3 Dichlorobenzene	ND	mg / Kg	1	0.005		02/02/01
X0127	XG.2001.157-5	108-67-8	1,3,5-Trimethylbenzene	ND	mg / Kg	1	0.005		02/02/01
X0127	XG.2001.157-5	764-41-0	1,4 Dichloro-2-butene	ND	mg / Kg	1	0.05		02/02/01
X0127	XG.2001.157-5	106-46-7	1,4 Dichlorobenzene	ND	mg / Kg	1	0.005		02/02/01
X0127	XG.2001.157-5	78-93-3	2-Butanone (MEK)	ND	mg / Kg	1	0.025		02/02

Quality Control Summary

Explanation of codes	
D	*Not applicable due to sample dilution*
L	*Not applicable due to MDL proximity*

Client: **CH2MHILL**

Project: **0102050** **160660.02.FF.SA**

X0127	XG.2001.157-5	110-75-8	2-Chloroethylvinylether	ND	mg / Kg	1	0.025		02/02/01
X0127	XG.2001.157-5	591-78-6	2-Hexanone (MBK)	ND	mg / Kg	1	0.025		02/02/01
X0127	XG.2001.157-5	108-10-1	4-Methyl-2-pentanone (MIBK)	ND	mg / Kg	1	0.025		02/02/01
X0127	XG.2001.157-5	67-64-1	Acetone	ND	mg / Kg	1	0.05		02/02/01
X0127	XG.2001.157-5	107-02-8	Acrolein	ND	mg / Kg	1	0.1		02/02/01
X0127	XG.2001.157-5	107-13-1	Acrylonitrile	ND	mg / Kg	1	0.1		02/02/01
X0127	XG.2001.157-5	71-43-2	Benzene	ND	mg / Kg	1	0.005		02/02/01
X0127	XG.2001.157-5	75-27-4	Bromodichloromethane	ND	mg / Kg	1	0.005		02/02/01
X0127	XG.2001.157-5	75-25-2	Bromoform	ND	mg / Kg	1	0.005		02/02/01
X0127	XG.2001.157-5	74-83-9	Bromomethane	ND	mg / Kg	1	0.025		02/02/01
X0127	XG.2001.157-5	75-15-0	Carbon disulfide	ND	mg / Kg	1	0.025		02/02/01
X0127	XG.2001.157-5	56-23-5	Carbon tetrachloride	ND	mg / Kg	1	0.005		02/02/01
X0127	XG.2001.157-5	108-90-7	Chlorobenzene	ND	mg / Kg	1	0.005		02/02/01
X0127	XG.2001.157-5	124-48-1	Chlorodibromomethane	ND	mg / Kg	1	0.005		02/02/01
X0127	XG.2001.157-5	75-00-3	Chloroethane	ND	mg / Kg	1	0.025		02/02/01
X0127	XG.2001.157-5	67-66-3	Chloroform	ND	mg / Kg	1	0.005		02/02/01
X0127	XG.2001.157-5	74-87-3	Chloromethane	ND	mg / Kg	1	0.025		02/02/01
X0127	XG.2001.157-5	156-59-2	cis-1,2 dichloroethene	ND	mg / Kg	1	0.005		02/02/01
X0127	XG.2001.157-5	10061-01-5	cis-1,3 dichloropropene	ND	mg / Kg	1	0.005		02/02/01
X0127	XG.2001.157-5	74-95-3	Dibromomethane	ND	mg / Kg	1	0.005		02/02/01
X0127	XG.2001.157-5	97-63-2	Ethyl methacrylate	ND	mg / Kg	1	0.025		02/02/01
X0127	XG.2001.157-5	100-41-4	Ethylbenzene	ND	mg / Kg	1	0.005		02/02/01
X0127	XG.2001.157-5		Freon 113	ND	mg / Kg	1	0.025		02/02/01
[illegible]	XG.2001.157-5	75-71-8	Freon 12	ND	mg / Kg	1	0.05		02/02/01
[illegible]	XG.2001.157-5	74-88-4	Iodomethane	ND	mg / Kg	1	0.025		02/02/01
X0127	XG.2001.157-5	1634-04-4	Methyl t-butyl ether (MTBE)	ND	mg / Kg	1	0.005		02/02/01
X0127	XG.2001.157-5	75-09-2	Methylene chloride	ND	mg / Kg	1	0.05		02/02/01
X0127	XG.2001.157-5	91-20-3	Naphthalene	ND	mg / Kg	1	0.025		02/02/01
X0127	XG.2001.157-5	95-47-6	o-Xylene	ND	mg / Kg	1	0.005		02/02/01
X0127	XG.2001.157-5	108-38-3/106-42	p/m Xylenes	ND	mg / Kg	1	0.01		02/02/01
X0127	XG.2001.157-5	100-42-5	Styrene	ND	mg / Kg	1	0.005		02/02/01
X0127	XG.2001.157-5	156-60-5	t-1,2 Dichloroethene	ND	mg / Kg	1	0.005		02/02/01
X0127	XG.2001.157-5	10061-02-6	t-1,3 Dichloropropene	ND	mg / Kg	1	0.005		02/02/01
X0127	XG.2001.157-5	127-18-4	Tetrachloroethene	ND	mg / Kg	1	0.005		02/02/01
X0127	XG.2001.157-5	108-88-3	Toluene	ND	mg / Kg	1	0.005		02/02/01
X0127	XG.2001.157-5	79-01-6	Trichloroethene	ND	mg / Kg	1	0.005		02/02/01
X0127	XG.2001.157-5	75-69-4	Trichlorofluoromethane	ND	mg / Kg	1	0.025		02/02/01
X0127	XG.2001.157-5	108-05-4	Vinyl acetate	ND	mg / Kg	1	0.025		02/02/01
X0127	XG.2001.157-5	75-01-4	Vinyl chloride	ND	mg / Kg	1	0.025		02/02/01

X0127-030 **SW846 8260A Purgeable VOCs by GC/MS**

X0127	XG.2001.198-1	75-34-3	1,1 Dichloroethane	ND	mg / Kg	1	0.005		02/09/01
X0127	XG.2001.198-1	75-34-3	1,1 Dichloroethene	ND	mg / Kg	1	0.005		02/09/01
X0127	XG.2001.198-1	71-55-6	1,1,1 Trichloroethane	ND	mg / Kg	1	0.005		02/09/01
X0127	XG.2001.198-1	630-20-6	1,1,1,2 Tetrachloroethane	ND	mg / Kg	1	0.005		02/09/01
X0127	XG.2001.198-1	79-00-5	1,1,2 Trichloroethane	ND	mg / Kg	1	0.005		02/09/01
X0127	XG.2001.198-1	79-34-5	1,1,2,2 Tetrachloroethane	ND	mg / Kg	1	0.005		02/09/01
X0127	XG.2001.198-1	106-93-4	1,2 Dibromoethane (EDB)	ND	mg / Kg	1	0.005		02/09/01
X0127	XG.2001.198-1	95-50-1	1,2 Dichlorobenzene	ND	mg / Kg	1	0.005		02/09/01
[illegible]	XG.2001.198-1	107-06-2	1,2 Dichloroethane	ND	mg / Kg	1	0.005		02/09/01

Quality Control Summary

Client: **CH2MHILL**

Project: **0102050** **160660.02.FF.SA**

Explanation of codes	
D	*Not applicable due to sample dilutio*
L	*Not applicable due to MDL proxim.*

X0127	XG.2001.198-1	78-87-5	1,2 Dichloropropane	ND	mg / Kg	1	0.005		02/09/01
X0127	XG.2001.198-1	96-18-4	1,2,3 Trichloropropane	ND	mg / Kg	1	0.005		02/09/01
X0127	XG.2001.198-1	95-63-6	1,2,4-Trimethylbenzene	ND	mg / Kg	1	0.005		02/09/01
X0127	XG.2001.198-1	541-73-1	1,3 Dichlorobenzene	ND	mg / Kg	1	0.005		02/09/01
X0127	XG.2001.198-1	108-67-8	1,3,5-Trimethylbenzene	ND	mg / Kg	1	0.005		02/09/01
X0127	XG.2001.198-1	764-41-0	1,4 Dichloro-2-butene	ND	mg / Kg	1	0.05		02/09/01
X0127	XG.2001.198-1	106-46-7	1,4 Dichlorobenzene	ND	mg / Kg	1	0.005		02/09/01
X0127	XG.2001.198-1	78-93-3	2-Butanone (MEK)	ND	mg / Kg	1	0.025		02/09/01
X0127	XG.2001.198-1	110-75-8	2-Chloroethylvinylether	ND	mg / Kg	1	0.025		02/09/01
X0127	XG.2001.198-1	591-78-6	2-Hexanone (MBK)	ND	mg / Kg	1	0.025		02/09/01
X0127	XG.2001.198-1	108-10-1	4-Methyl-2-pentanone (MIBK)	ND	mg / Kg	1	0.025		02/09/01
X0127	XG.2001.198-1	67-64-1	Acetone	ND	mg / Kg	1	0.05		02/09/01
X0127	XG.2001.198-1	107-02-8	Acrolein	ND	mg / Kg	1	0.1		02/09/01
X0127	XG.2001.198-1	107-13-1	Acrylonitrile	ND	mg / Kg	1	0.1		02/09/01
X0127	XG.2001.198-1	71-43-2	Benzene	ND	mg / Kg	1	0.005		02/09/01
X0127	XG.2001.198-1	75-27-4	Bromodichloromethane	ND	mg / Kg	1	0.005		02/09/01
X0127	XG.2001.198-1	75-25-2	Bromoform	ND	mg / Kg	1	0.005		02/09/01
X0127	XG.2001.198-1	74-83-9	Bromomethane	ND	mg / Kg	1	0.025		02/09/01
X0127	XG.2001.198-1	75-15-0	Carbon disulfide	ND	mg / Kg	1	0.025		02/09/01
X0127	XG.2001.198-1	56-23-5	Carbon tetrachloride	ND	mg / Kg	1	0.005		02/09/01
X0127	XG.2001.198-1	108-90-7	Chlorobenzene	ND	mg / Kg	1	0.005		02/09/01
X0127	XG.2001.198-1	124-48-1	Chlorodibromomethane	ND	mg / Kg	1	0.005		02/09/01
X0127	XG.2001.198-1	75-00-3	Chloroethane	ND	mg / Kg	1	0.025		02/09/01
X0127	XG.2001.198-1	67-66-3	Chloroform	ND	mg / Kg	1	0.005		02/09/0
X0127	XG.2001.198-1	74-87-3	Chloromethane	ND	mg / Kg	1	0.025		02/09/
X0127	XG.2001.198-1	156-59-2	cis-1,2 dichloroethene	ND	mg / Kg	1	0.005		02/09/01
X0127	XG.2001.198-1	10061-01-5	cis-1,3 dichloropropene	ND	mg / Kg	1	0.005		02/09/01
X0127	XG.2001.198-1	74-95-3	Dibromomethane	ND	mg / Kg	1	0.005		02/09/01
X0127	XG.2001.198-1	97-63-2	Ethyl methacrylate	ND	mg / Kg	1	0.025		02/09/01
X0127	XG.2001.198-1	100-41-4	Ethylbenzene	ND	mg / Kg	1	0.005		02/09/01
X0127	XG.2001.198-1		Freon 113	ND	mg / Kg	1	0.025		02/09/01
X0127	XG.2001.198-1	75-71-8	Freon 12	ND	mg / Kg	1	0.05		02/09/01
X0127	XG.2001.198-1	74-88-4	Iodomethane	ND	mg / Kg	1	0.025		02/09/01
X0127	XG.2001.198-1	1634-04-4	Methyl t-butyl ether (MTBE)	ND	mg / Kg	1	0.005		02/09/01
X0127	XG.2001.198-1	75-09-2	Methylene chloride	ND	mg / Kg	1	0.05		02/09/01
X0127	XG.2001.198-1	91-20-3	Naphthalene	ND	mg / Kg	1	0.025		02/09/01
X0127	XG.2001.198-1	95-47-6	o-Xylene	ND	mg / Kg	1	0.005		02/09/01
X0127	XG.2001.198-1	108-38-3/106-42	p/m Xylenes	ND	mg / Kg	1	0.01		02/09/01
X0127	XG.2001.198-1	100-42-5	Styrene	ND	mg / Kg	1	0.005		02/09/01
X0127	XG.2001.198-1	156-60-5	t-1,2 Dichloroethene	ND	mg / Kg	1	0.005		02/09/01
X0127	XG.2001.198-1	10061-02-6	t-1,3 Dichloropropene	ND	mg / Kg	1	0.005		02/09/01
X0127	XG.2001.198-1	127-18-4	Tetrachloroethene	ND	mg / Kg	1	0.005		02/09/01
X0127	XG.2001.198-1	108-88-3	Toluene	ND	mg / Kg	1	0.005		02/09/01
X0127	XG.2001.198-1	79-01-6	Trichloroethene	ND	mg / Kg	1	0.005		02/09/01
X0127	XG.2001.198-1	75-69-4	Trichlorofluoromethane	ND	mg / Kg	1	0.025		02/09/01
X0127	XG.2001.198-1	108-05-4	Vinyl acetate	ND	mg / Kg	1	0.025		02/09/01
X0127	XG.2001.198-1	75-01-4	Vinyl chloride	ND	mg / Kg	1	0.025		02/09/01
X0127-039		**SW846 8260A Purgeable VOCs by GC/MS**							
X0127	XG.2001.198-9	75-34-3	1,1 Dichloroethane	ND	mg / Kg	1	0.005		02/13/0

Quality Control Summary

Explanation of codes	
D	*Not applicable due to sample dilution*
L	*Not applicable due to MDL proximity*

Client: **CH2MHILL**

Project: **0102050** **160660.02.FF.SA**

X0127	XG.2001.198-9	75-34-3	1,1 Dichloroethene	ND	mg / Kg	1	0.005		02/13/01
X0127	XG.2001.198-9	71-55-6	1,1,1 Trichloroethane	ND	mg / Kg	1	0.005		02/13/01
X0127	XG.2001.198-9	630-20-6	1,1,1,2 Tetrachloroethane	ND	mg / Kg	1	0.005		02/13/01
X0127	XG.2001.198-9	79-00-5	1,1,2 Trichloroethane	ND	mg / Kg	1	0.005		02/13/01
X0127	XG.2001.198-9	79-34-5	1,1,2,2 Tetrachloroethane	ND	mg / Kg	1	0.005		02/13/01
X0127	XG.2001.198-9	106-93-4	1,2 Dibromoethane (EDB)	ND	mg / Kg	1	0.005		02/13/01
X0127	XG.2001.198-9	95-50-1	1,2 Dichlorobenzene	ND	mg / Kg	1	0.005		02/13/01
X0127	XG.2001.198-9	107-06-2	1,2 Dichloroethane	ND	mg / Kg	1	0.005		02/13/01
X0127	XG.2001.198-9	78-87-5	1,2 Dichloropropane	ND	mg / Kg	1	0.005		02/13/01
X0127	XG.2001.198-9	96-18-4	1,2,3 Trichloropropane	ND	mg / Kg	1	0.005		02/13/01
X0127	XG.2001.198-9	95-63-6	1,2,4-Trimethylbenzene	ND	mg / Kg	1	0.005		02/13/01
X0127	XG.2001.198-9	541-73-1	1,3 Dichlorobenzene	ND	mg / Kg	1	0.005		02/13/01
X0127	XG.2001.198-9	108-67-8	1,3,5-Trimethylbenzene	ND	mg / Kg	1	0.005		02/13/01
X0127	XG.2001.198-9	764-41-0	1,4 Dichloro-2-butene	ND	mg / Kg	1	0.05		02/13/01
X0127	XG.2001.198-9	106-46-7	1,4 Dichlorobenzene	ND	mg / Kg	1	0.005		02/13/01
X0127	XG.2001.198-9	78-93-3	2-Butanone (MEK)	ND	mg / Kg	1	0.025		02/13/01
X0127	XG.2001.198-9	110-75-8	2-Chloroethylvinylether	ND	mg / Kg	1	0.025		02/13/01
X0127	XG.2001.198-9	591-78-6	2-Hexanone (MBK)	ND	mg / Kg	1	0.025		02/13/01
X0127	XG.2001.198-9	108-10-1	4-Methyl-2-pentanone (MIBK)	ND	mg / Kg	1	0.025		02/13/01
X0127	XG.2001.198-9	67-64-1	Acetone	ND	mg / Kg	1	0.05		02/13/01
X0127	XG.2001.198-9	107-02-8	Acrolein	ND	mg / Kg	1	0.1		02/13/01
X0127	XG.2001.198-9	107-13-1	Acrylonitrile	ND	mg / Kg	1	0.1		02/13/01
X0127	XG.2001.198-9	71-43-2	Benzene	ND	mg / Kg	1	0.005		02/13/01
	XG.2001.198-9	75-27-4	Bromodichloromethane	ND	mg / Kg	1	0.005		02/13/01
	XG.2001.198-9	75-25-2	Bromoform	ND	mg / Kg	1	0.005		02/13/01
X0127	XG.2001.198-9	74-83-9	Bromomethane	ND	mg / Kg	1	0.025		02/13/01
X0127	XG.2001.198-9	75-15-0	Carbon disulfide	ND	mg / Kg	1	0.025		02/13/01
X0127	XG.2001.198-9	56-23-5	Carbon tetrachloride	ND	mg / Kg	1	0.005		02/13/01
X0127	XG.2001.198-9	108-90-7	Chlorobenzene	ND	mg / Kg	1	0.005		02/13/01
X0127	XG.2001.198-9	124-48-1	Chlorodibromomethane	ND	mg / Kg	1	0.005		02/13/01
X0127	XG.2001.198-9	75-00-3	Chloroethane	ND	mg / Kg	1	0.025		02/13/01
X0127	XG.2001.198-9	67-66-3	Chloroform	ND	mg / Kg	1	0.005		02/13/01
X0127	XG.2001.198-9	74-87-3	Chloromethane	ND	mg / Kg	1	0.025		02/13/01
X0127	XG.2001.198-9	156-59-2	cis-1,2 dichloroethene	ND	mg / Kg	1	0.005		02/13/01
X0127	XG.2001.198-9	10061-01-5	cis-1,3 dichloropropene	ND	mg / Kg	1	0.005		02/13/01
X0127	XG.2001.198-9	74-95-3	Dibromomethane	ND	mg / Kg	1	0.005		02/13/01
X0127	XG.2001.198-9	97-63-2	Ethyl methacrylate	ND	mg / Kg	1	0.025		02/13/01
X0127	XG.2001.198-9	100-41-4	Ethylbenzene	ND	mg / Kg	1	0.005		02/13/01
X0127	XG.2001.198-9		Freon 113	ND	mg / Kg	1	0.025		02/13/01
X0127	XG.2001.198-9	75-71-8	Freon 12	ND	mg / Kg	1	0.05		02/13/01
X0127	XG.2001.198-9	74-88-4	Iodomethane	ND	mg / Kg	1	0.025		02/13/01
X0127	XG.2001.198-9	1634-04-4	Methyl t-butyl ether (MTBE)	ND	mg / Kg	1	0.005		02/13/01
X0127	XG.2001.198-9	75-09-2	Methylene chloride	ND	mg / Kg	1	0.05		02/13/01
X0127	XG.2001.198-9	91-20-3	Naphthalene	ND	mg / Kg	1	0.025		02/13/01
X0127	XG.2001.198-9	95-47-6	o-Xylene	ND	mg / Kg	1	0.005		02/13/01
X0127	XG.2001.198-9	108-38-3/106-42	p/m Xylenes	ND	mg / Kg	1	0.01		02/13/01
X0127	XG.2001.198-9	100-42-5	Styrene	ND	mg / Kg	1	0.005		02/13/01
X0127	XG.2001.198-9	156-60-5	t-1,2 Dichloroethene	ND	mg / Kg	1	0.005		02/13/01
7	XG.2001.198-9	10061-02-6	t-1,3 Dichloropropene	ND	mg / Kg	1	0.005		02/13/01
7	XG.2001.198-9	127-18-4	Tetrachloroethene	ND	mg / Kg	1	0.005		02/13/01

Quality Control Summary

Client: **CH2MHILL**

Project: **0102050** **160660.02.FF.SA**

Explanation of codes

D	*Not applicable due to sample dilut*
L	*Not applicable due to MDL proxin*

X0127	XG.2001.198-9	108-88-3	Toluene	ND	mg / Kg	1	0.005		02/13/0
X0127	XG.2001.198-9	79-01-6	Trichloroethene	ND	mg / Kg	1	0.005		02/13/0
X0127	XG.2001.198-9	75-69-4	Trichlorofluoromethane	ND	mg / Kg	1	0.025		02/13/0
X0127	XG.2001.198-9	108-05-4	Vinyl acetate	ND	mg / Kg	1	0.025		02/13/0
X0127	XG.2001.198-9	75-01-4	Vinyl chloride	ND	mg / Kg	1	0.025		02/13/0
X0148-001		**SW846 ME/8015A Diesel Range Organics by GC/FID**							
X0148	XG.2001.169-1		Diesel Range Organics	ND	mg / Kg	1	25		02/07/0
X0148-008		**SW846 ME/8015A Diesel Range Organics by GC/FID**							
X0148	XG.2001.175-1		Diesel Range Organics	ND	mg / Kg	1	25		02/08/0
X0148-011		**SW846 ME/8015A Diesel Range Organics by GC/FID**							
X0148	XG.2001.182-1		Diesel Range Organics	ND	mg / Kg	1	25		02/09/0
X0148-013		**SW846 ME/8015A Diesel Range Organics by GC/FID**							
X0148	XG.2001.194-1		Diesel Range Organics	ND	mg / Kg	1	25		02/14/0

QC Type **MS: Matrix Spike** QC Matrix **SOLID**

QC Group	Run Sequence	CAS #	Analyte	Result	Units	Dilution Factor	Detection Limit	Code	Run Date
X0114-012		**SW846 5030A/8015A GRO by GC/FID**							
X0114	XG.2001.56-3		Gasoline Range Organics	112	% Recovery	10	NA		01/10/01
X0127-003		**SW846 8260A Purgeable VOCs by GC/MS**							
X0127	XG.2001.69-3	75-34-3	1,1 Dichloroethene	116	% Recovery	1	NA		01/18/01
X0127	XG.2001.69-3	106-46-7	1,4 Dichlorobenzene	104	% Recovery	1	NA		01/18/01
X0127	XG.2001.69-3	71-43-2	Benzene	117	% Recovery	1	NA		01/18/01
X0127	XG.2001.69-3	108-90-7	Chlorobenzene	110	% Recovery	1	NA		01/18/01
X0127	XG.2001.69-3	108-88-3	Toluene	117	% Recovery	1	NA		01/18/01
X0127	XG.2001.69-3	79-01-6	Trichloroethene	109	% Recovery	1	NA		01/18/01
X0148-005		**SW846 ME/8015A Diesel Range Organics by GC/FID**							
X0148	XG.2001.169-5		Diesel Range Organics	99	% Recovery	1	NA		02/07/01

QC Type **MSD: Matrix Spike Duplicate Accuracy** QC Matrix **SOLID**

QC Group	Run Sequence	CAS #	Analyte	Result	Units	Dilution Factor	Detection Limit	Code	Run Date
X0114-013		**SW846 5030A/8015A GRO by GC/FID**							
X0114	XG.2001.56-4		Gasoline Range Organics	112	% Recovery	10	NA		01/10/01
X0127-004		**SW846 8260A Purgeable VOCs by GC/MS**							
X0127	XG.2001.69-4	75-34-3	1,1 Dichloroethene	113	% Recovery	1	NA		01/18/01
X0127	XG.2001.69-4	106-46-7	1,4 Dichlorobenzene	103	% Recovery	1	NA		01/18/01
X0127	XG.2001.69-4	71-43-2	Benzene	116	% Recovery	1	NA		01/18/01
X0127	XG.2001.69-4	108-90-7	Chlorobenzene	110	% Recovery	1	NA		01/18/01
X0127	XG.2001.69-4	108-88-3	Toluene	116	% Recovery	1	NA		01/18/01
X0127	XG.2001.69-4	79-01-6	Trichloroethene	108	% Recovery	1	NA		01/18/0

Quality Control Summary

Client: **CH2MHILL**

Project: **0102050** **160660.02.FF.SA**

Explanation of codes	
D	*Not applicable due to sample dilution*
L	*Not applicable due to MDL proximity*

X0148-006		**SW846 ME/8015A Diesel Range Organics by GC/FID**							
X0148	XG.2001.169-6		Diesel Range Organics	96	% Recovery	1	NA		02/07/01

QC Type **MSD: Matrix Spike Duplicate Precision** QC Matrix **SOLID**

QC Group	Run Sequence	CAS #	Analyte	Result	Units	Dilution Factor	Detection Limit	Code	Run Date
X0114-013		**SW846 5030A/8015A GRO by GC/FID**							
X0114	XG.2001.56-4		Gasoline Range Organics	< 1	RPD	10	NA		01/10/01
X0127-004		**SW846 8260A Purgeable VOCs by GC/MS**							
X0127	XG.2001.69-4	75-34-3	1,1 Dichloroethene	2	RPD	1	NA		01/18/01
X0127	XG.2001.69-4	106-46-7	1,4 Dichlorobenzene	< 1	RPD	1	NA		01/18/01
X0127	XG.2001.69-4	71-43-2	Benzene	1	RPD	1	NA		01/18/01
X0127	XG.2001.69-4	108-90-7	Chlorobenzene	< 1	RPD	1	NA		01/18/01
X0127	XG.2001.69-4	108-88-3	Toluene	< 1	RPD	1	NA		01/18/01
X0127	XG.2001.69-4	79-01-6	Trichloroethene	< 1	RPD	1	NA		01/18/01
X0148-006		**SW846 ME/8015A Diesel Range Organics by GC/FID**							
X0148	XG.2001.169-6		Diesel Range Organics	3	RPD	1	NA		02/07/01

Assaigai Analytical Laboratories, Inc.

Surrogate Summary: QC

Client: CH2MHILL

Project: 0102050 160660.02.FF.SA

QC Type: **LCS** QC Matrix: **SOLID**

QC Group	Run Sequence	CAS #	Analyte	Result	Units	Dilution Factor	Detection Limit	Code	Run Date
X0114-002		GRO							
X0114	XG.2001.43-2	NA	4-Bromofluorobenzene-FID	106	% Recovery	1	NA		01/09/01
X0114	XG.2001.43-2	NA	4-Bromofluorobenzene-PID	ND	% Recovery	1	NA		01/09/01
X0114	XG.2001.43-2	NA	aaa-Trifluorotoluene-FID	105	% Recovery	1	NA		01/09/01
X0114	XG.2001.43-2	NA	aaa-Trifluorotoluene-PID	ND	% Recovery	1	NA		01/09/01
X0127-005		8260							
X0127	XG.2001.69-5	NA	1,2 Dichloroethane-D4 (SS)	87	% Recovery	1	NA		01/18/01
X0127	XG.2001.69-5	NA	4-Bromofluorobenzene (SS)	96	% Recovery	1	NA		01/18/01
X0127	XG.2001.69-5	NA	Dibromofluoromethane (SS)	101	% Recovery	1	NA		01/18/01
X0127	XG.2001.69-5	NA	Toluene-D8 (SS)	102	% Recovery	1	NA		01/18/01
X0148-002		DRO							
X0148	XG.2001.169-2	NA	O-terphenyl	102	% Recovery	1	NA		02/07/01

QC Type: **LCSD** QC Matrix: **SOLID**

QC Group	Run Sequence	CAS #	Analyte	Result	Units	Dilution Factor	Detection Limit	Code	Run Date
X0114-003		GRO							
X0114	XG.2001.43-3	NA	4-Bromofluorobenzene-FID	106	% Recovery	1	NA		01/09/01
X0114	XG.2001.43-3	NA	4-Bromofluorobenzene-PID	ND	% Recovery	1	NA		01/09/01
X0114	XG.2001.43-3	NA	aaa-Trifluorotoluene-FID	105	% Recovery	1	NA		01/09/01
X0114	XG.2001.43-3	NA	aaa-Trifluorotoluene-PID	ND	% Recovery	1	NA		01/09/01
X0127-006		8260							
X0127	XG.2001.69-6	NA	1,2 Dichloroethane-D4 (SS)	91	% Recovery	1	NA		01/18/01
X0127	XG.2001.69-6	NA	4-Bromofluorobenzene (SS)	98	% Recovery	1	NA		01/18/01
X0127	XG.2001.69-6	NA	Dibromofluoromethane (SS)	101	% Recovery	1	NA		01/18/01
X0127	XG.2001.69-6	NA	Toluene-D8 (SS)	102	% Recovery	1	NA		01/18/01
X0148-003		DRO							
X0148	XG.2001.169-3	NA	O-terphenyl	104	% Recovery	1	NA		02/07/01

QC Type: **MB** QC Matrix: **SOLID**

QC Group	Run Sequence	CAS #	Analyte	Result	Units	Dilution Factor	Detection Limit	Code	Run Date
X0114-001		GRO							
X0114	XG.2001.43-1	NA	4-Bromofluorobenzene-FID	93	% Recovery	1	NA		01/09/01
[illegible]	XG.2001.43-1	NA	4-Bromofluorobenzene-PID	ND	% Recovery	1	NA		01/09/01
[illegible]	XG.2001.43-1	NA	aaa-Trifluorotoluene-FID	104	% Recovery	1	NA		01/09/01

Surrogate Summary: QC

Client: **CH2MHILL**

Project: **0102050** **160660.02.FF.SA**

X0114	XG.2001.43-1	NA	aaa-Trifluorotoluene-PID	ND	% Recovery	1	NA		01/09/01
X0114-010		GRO							
X0114	XG.2001.56-1	NA	4-Bromofluorobenzene-FID	92	% Recovery	1	NA		01/10/01
X0114	XG.2001.56-1	NA	4-Bromofluorobenzene-PID	ND	% Recovery	1	NA		01/10/01
X0114	XG.2001.56-1	NA	aaa-Trifluorotoluene-FID	102	% Recovery	1	NA		01/10/01
X0114	XG.2001.56-1	NA	aaa-Trifluorotoluene-PID	ND	% Recovery	1	NA		01/10/01
X0114-014		GRO							
X0114	XG.2001.120-1	NA	4-Bromofluorobenzene-FID	93	% Recovery	1	NA		01/26/01
X0114	XG.2001.120-1	NA	4-Bromofluorobenzene-PID	ND	% Recovery	1	NA		01/26/01
X0114	XG.2001.120-1	NA	aaa-Trifluorotoluene-FID	102	% Recovery	1	NA		01/26/01
X0114	XG.2001.120-1	NA	aaa-Trifluorotoluene-PID	ND	% Recovery	1	NA		01/26/01
X0114-018		GRO							
X0114	XG.2001.129-1	NA	4-Bromofluorobenzene-FID	89	% Recovery	1	NA		01/30/01
X0114	XG.2001.129-1	NA	4-Bromofluorobenzene-PID	ND	% Recovery	1	NA		01/30/01
X0114	XG.2001.129-1	NA	aaa-Trifluorotoluene-FID	101	% Recovery	1	NA		01/30/01
X0114	XG.2001.129-1	NA	aaa-Trifluorotoluene-PID	ND	% Recovery	1	NA		01/30/01
X0114-026		GRO							
X0114	XG.2001.149-1	NA	4-Bromofluorobenzene-FID	87	% Recovery	1	NA		02/01/01
X0114	XG.2001.149-1	NA	4-Bromofluorobenzene-PID	ND	% Recovery	1	NA		02/01/01
X0114	XG.2001.149-1	NA	aaa-Trifluorotoluene-FID	102	% Recovery	1	NA		02/01/01
X0114	XG.2001.149-1	NA	aaa-Trifluorotoluene-PID	ND	% Recovery	1	NA		02/01/01
X0114-029		GRO							
X0114	XG.2001.168-1	NA	4-Bromofluorobenzene-FID	86	% Recovery	1	NA		02/07/01
X0114	XG.2001.168-1	NA	4-Bromofluorobenzene-PID	ND	% Recovery	1	NA		02/07/01
X0114	XG.2001.168-1	NA	aaa-Trifluorotoluene-FID	101	% Recovery	1	NA		02/07/01
X0114	XG.2001.168-1	NA	aaa-Trifluorotoluene-PID	ND	% Recovery	1	NA		02/07/01
X0127-001		8260							
X0127	XG.2001.69-1	NA	1,2 Dichloroethane-D4 (SS)	85	% Recovery	1	NA		01/18/01
X0127	XG.2001.69-1	NA	4-Bromofluorobenzene (SS)	96	% Recovery	1	NA		01/18/01
X0127	XG.2001.69-1	NA	Dibromofluoromethane (SS)	98	% Recovery	1	NA		01/18/01
X0127	XG.2001.69-1	NA	Toluene-D8 (SS)	100	% Recovery	1	NA		01/18/01
X0127-011		8260							
X0127	XG.2001.80-1	NA	1,2 Dichloroethane-D4 (SS)	96	% Recovery	1	NA		01/22/01
X0127	XG.2001.80-1	NA	4-Bromofluorobenzene (SS)	100	% Recovery	1	NA		01/22/01
X0127	XG.2001.80-1	NA	Dibromofluoromethane (SS)	103	% Recovery	1	NA		01/22/01
X0127	XG.2001.80-1	NA	Toluene-D8 (SS)	101	% Recovery	1	NA		01/22/01
X0127-014		8260							
X0127	XG.2001.80-3	NA	1,2 Dichloroethane-D4 (SS)	95	% Recovery	1	NA		01/22/0
X0127	XG.2001.80-3	NA	4-Bromofluorobenzene (SS)	97	% Recovery	1	NA		01/22/0
X0127	XG.2001.80-3	NA	Dibromofluoromethane (SS)	102	% Recovery	1	NA		01/22/0
X0127	XG.2001.80-3	NA	Toluene-D8 (SS)	102	% Recovery	1	NA		01/22/0
X0127-016		8260							
X0127	XG.2001.117-1	NA	1,2 Dichloroethane-D4 (SS)	99	% Recovery	1	NA		01/25/0
X0127	XG.2001.117-1	NA	4-Bromofluorobenzene (SS)	98	% Recovery	1	NA		01/25/0
X0127	XG.2001.117-1	NA	Dibromofluoromethane (SS)	102	% Recovery	1	NA		01/25/0
X0127	XG.2001.117-1	NA	Toluene-D8 (SS)	103	% Recovery	1	NA		01/25/

Surrogate Summary: QC

Client: **CH2MHILL**

Project: **0102050** **160660.02.FF.SA**

X0127-019		8260							
X0127	XG.2001.124-1	NA	1,2 Dichloroethane-D4 (SS)	94	% Recovery	1	NA		01/29/01
X0127	XG.2001.124-1	NA	4-Bromofluorobenzene (SS)	97	% Recovery	1	NA		01/29/01
X0127	XG.2001.124-1	NA	Dibromofluoromethane (SS)	102	% Recovery	1	NA		01/29/01
X0127	XG.2001.124-1	NA	Toluene-D8 (SS)	100	% Recovery	1	NA		01/29/01
X0127-021		8260							
X0127	XG.2001.132-1	NA	1,2 Dichloroethane-D4 (SS)	89	% Recovery	1	NA		01/30/01
X0127	XG.2001.132-1	NA	4-Bromofluorobenzene (SS)	98	% Recovery	1	NA		01/30/01
X0127	XG.2001.132-1	NA	Dibromofluoromethane (SS)	101	% Recovery	1	NA		01/30/01
X0127	XG.2001.132-1	NA	Toluene-D8 (SS)	100	% Recovery	1	NA		01/30/01
X0127-024		8260							
X0127	XG.2001.157-2	NA	1,2 Dichloroethane-D4 (SS)	94	% Recovery	1	NA		02/01/01
X0127	XG.2001.157-2	NA	4-Bromofluorobenzene (SS)	98	% Recovery	1	NA		02/01/01
X0127	XG.2001.157-2	NA	Dibromofluoromethane (SS)	101	% Recovery	1	NA		02/01/01
X0127	XG.2001.157-2	NA	Toluene-D8 (SS)	100	% Recovery	1	NA		02/01/01
X0127-028		8260							
X0127	XG.2001.157-5	NA	1,2 Dichloroethane-D4 (SS)	97	% Recovery	1	NA		02/02/01
X0127	XG.2001.157-5	NA	4-Bromofluorobenzene (SS)	98	% Recovery	1	NA		02/02/01
X0127	XG.2001.157-5	NA	Dibromofluoromethane (SS)	101	% Recovery	1	NA		02/02/01
X0127	XG.2001.157-5	NA	Toluene-D8 (SS)	102	% Recovery	1	NA		02/02/01
X0127-030		8260							
[illegible]7	XG.2001.198-1	NA	1,2 Dichloroethane-D4 (SS)	91	% Recovery	1	NA		02/09/01
X0127	XG.2001.198-1	NA	4-Bromofluorobenzene (SS)	99	% Recovery	1	NA		02/09/01
X0127	XG.2001.198-1	NA	Dibromofluoromethane (SS)	98	% Recovery	1	NA		02/09/01
X0127	XG.2001.198-1	NA	Toluene-D8 (SS)	100	% Recovery	1	NA		02/09/01
X0127-039		8260							
X0127	XG.2001.198-9	NA	1,2 Dichloroethane-D4 (SS)	97	% Recovery	1	NA		02/13/01
X0127	XG.2001.198-9	NA	4-Bromofluorobenzene (SS)	101	% Recovery	1	NA		02/13/01
X0127	XG.2001.198-9	NA	Dibromofluoromethane (SS)	100	% Recovery	1	NA		02/13/01
X0127	XG.2001.198-9	NA	Toluene-D8 (SS)	100	% Recovery	1	NA		02/13/01
X0148-001		DRO							
X0148	XG.2001.169-1	NA	O-terphenyl	92	% Recovery	1	NA		02/07/01
X0148-008		DRO							
X0148	XG.2001.175-1	NA	O-terphenyl	92	% Recovery	1	NA		02/08/01
X0148-011		DRO							
X0148	XG.2001.182-1	NA	O-terphenyl	90	% Recovery	1	NA		02/09/01
X0148-013		DRO							
X0148	XG.2001.194-1	NA	O-terphenyl	87	% Recovery	1	NA		02/14/01

Surrogate Summary: QC

Client: **CH2MHILL**

Project: **0102050** **160660.02.FF.SA**

QC Type **MS** QC Matrix **SOLID**

QC Group	Run Sequence	CAS #	Analyte	Result	Units	Dilution Factor	Detection Limit	Code	Run Date
X0114-012		GRO							
X0114	XG.2001.56-3	NA	4-Bromofluorobenzene-FID	105	% Recovery	10	NA		01/10/01
X0114	XG.2001.56-3	NA	4-Bromofluorobenzene-PID	ND	% Recovery	10	NA		01/10/01
X0114	XG.2001.56-3	NA	aaa-Trifluorotoluene-FID	106	% Recovery	10	NA		01/10/01
X0114	XG.2001.56-3	NA	aaa-Trifluorotoluene-PID	ND	% Recovery	10	NA		01/10/01
X0127-003		8260							
X0127	XG.2001.69-3	NA	1,2 Dichloroethane-D4 (SS)	93	% Recovery	1	NA		01/18/01
X0127	XG.2001.69-3	NA	4-Bromofluorobenzene (SS)	92	% Recovery	1	NA		01/18/01
X0127	XG.2001.69-3	NA	Dibromofluoromethane (SS)	103	% Recovery	1	NA		01/18/01
X0127	XG.2001.69-3	NA	Toluene-D8 (SS)	96	% Recovery	1	NA		01/18/01
X0148-005		DRO							
X0148	XG.2001.169-5	NA	O-terphenyl	107	% Recovery	1	NA		02/07/01

QC Type **MSD** QC Matrix **SOLID**

QC Group	Run Sequence	CAS #	Analyte	Result	Units	Dilution Factor	Detection Limit	Code	Run Date
X0114-013		GRO							
X0114	XG.2001.56-4	NA	4-Bromofluorobenzene-FID	106	% Recovery	10	NA		01/10/01
X0114	XG.2001.56-4	NA	4-Bromofluorobenzene-PID	ND	% Recovery	10	NA		01/10/01
X0114	XG.2001.56-4	NA	aaa-Trifluorotoluene-FID	107	% Recovery	10	NA		01/10/01
X0114	XG.2001.56-4	NA	aaa-Trifluorotoluene-PID	ND	% Recovery	10	NA		01/10/01
X0127-004		8260							
X0127	XG.2001.69-4	NA	1,2 Dichloroethane-D4 (SS)	94	% Recovery	1	NA		01/18/01
X0127	XG.2001.69-4	NA	4-Bromofluorobenzene (SS)	93	% Recovery	1	NA		01/18/01
X0127	XG.2001.69-4	NA	Dibromofluoromethane (SS)	104	% Recovery	1	NA		01/18/01
X0127	XG.2001.69-4	NA	Toluene-D8 (SS)	96	% Recovery	1	NA		01/18/01
X0148-006		DRO							
X0148	XG.2001.169-6	NA	O-terphenyl	108	% Recovery	1	NA		02/07/01

Assaigai Analytical Laboratories, Inc.

Surrogate Summary: Fraction

Client: **CH2MHILL**

Project: **0102050** **160660.02.FF.SA**

Client Sample ID **ST106 SB31 70'** Sample Matrix **SOIL**

QC Group	Run Sequence	CAS #	Analyte	Result	Units	Dilution Factor	Detection Limit	Code	Run Date
0102050-01A		DRO							**X0148-004**
X0148	XG.2001.169-4	NA	O-terphenyl	92	% Recovery	1	NA		02/07/01
0102050-01B		GRO							**X0114-030**
X0114	XG.2001.168-2	NA	4-Bromofluorobenzene-FID	87	% Recovery	1	NA		02/07/01
X0114	XG.2001.168-2	NA	4-Bromofluorobenzene-PID	ND	% Recovery	1	NA		02/07/01
X0114	XG.2001.168-2	NA	aaa-Trifluorotoluene-FID	102	% Recovery	1	NA		02/07/01
X0114	XG.2001.168-2	NA	aaa-Trifluorotoluene-PID	ND	% Recovery	1	NA		02/07/01
0102050-01C		8260							**X0127-034**
X0127	XG.2001.198-5	NA	1,2 Dichloroethane-D4 (SS)	93	% Recovery	1	NA		02/09/01
X0127	XG.2001.198-5	NA	4-Bromofluorobenzene (SS)	97	% Recovery	1	NA		02/09/01
X0127	XG.2001.198-5	NA	Dibromofluoromethane (SS)	99	% Recovery	1	NA		02/09/01
X0127	XG.2001.198-5	NA	Toluene-D8 (SS)	101	% Recovery	1	NA		02/09/01

ASSAIGAI ANALYTICAL LABORATORIES, INC.

Chain of Custody Record

7300 JEFFERSON N.E.
ALBUQUERQUE, NEW MEXICO 87109
(505) 345-8964

3332 WEDGEWOOD
EL PASO, TEXAS 79925
(915) 593-6000

127 EASTGATE DRIVE, 212-C
LOS ALAMOS, NEW MEXICO 87544
(505) 662-2558

Lab job No.: 0102050 Date: 2-6

Page 1 of 1

Client: CH2M HILL

Address: 6001 Indian School Rd NE #350

City / State / Zip: ABQ NM 87110

Project Name / Number: KHFB/TO10/Bulk Bucl

Contract / Purchase Order / Quote:

Project Manager / Contact: Hollis LeFevre

Telephone No.: 884 5606

Fax No.: 883 7507

Samplers: (signature): [signature]

Analysis Required: DRO, GRO, VOC, 8260

AAL Fraction Number	Field Sample Number / Location	Date	Time	Sample Type	Type / Size of Container	Preservation Temp.	Preservation Chemical	No. of Containers	DRO	GRO	VOC	8260							Remarks
1	ST 106 SB31 70'	2-6	1715	Soil	4 oz	ICE	—	3	X	X	X								

Relinquished by:	Date	Received by:	Relinquished by:	Date	Received by:
Signature: [signature]	2-6	Signature: [signature]	Signature:		Signature:
Printed: WM J LeFevre	Time: 1825	Printed: Scott Pratt	Printed:	Time	Printed:
Company: CH2M HILL		Company: AAL	Company:		Company:
Reason: DROP @ LAB		Reason:	Reason:		Reason:

Method of Shipment:

Shipment No.:

Special Instructions:

Comments: 24 HR TAT W/ TPH X

After analysis, samples are to be:

- ☐ Disposed of (additional fee)
- ☐ Stored (30 days max)
- ☐ Stored over 30 days (additional fee)
- ☐ Returned to customer

ASSAIGAI
ANALYTICAL
LABORATORIES, INC.
7300 Jefferson, NE • Albuquerque, New Mexico 87109 • (505) 345-8964 • FAX (505) 345-7259
3332 Wedgewood Dr., Suite N • El Paso, Texas 79925 • (915) 593-6000 • FAX (915) 593-7820
127 Eastgate Drive, 212-C • Los Alamos, New Mexico 87544 • (505) 662-2555

RECEIVED FEB 2 3 2001

Explanation of codes

B	*analyte detected in Method Blank*
E	*result is estimated*
H	*analyzed out of hold time*
N	*tentatively identified compound*
S	*subcontracted*
1-9	*see footnote*

CH2MHILL
attn: **AMY HALLORAN**
6001 INDIAN SCHOOL RD NE STE 350
ALBUQUERQUE, NM 87110-4140

Assaigai Analytical Laboratories, Inc.

Certificate of Analysis

Client: **CH2MHILL**
Project: **0102072** **160660.02.FF.SA**

William P. Biava: President of Assaigai Analytical Laboratories, Inc.

Client Sample ID ***ST 106 SB31 120'*** Sample Matrix ***SOIL*** Sample Collected ***02/07/01 10:35:00***

Group	Run Sequence	CAS #	Analyte	Result	Units	Dilution Factor	Detection Limit	Code	Run Date
0102072-01A		**SW846 5030A/8015A GRO by GC/FID**							
X0150	XG.2001.174-4		Gasoline Range Organics	ND	mg / Kg	1	0.25		02/07/01
0102072-01B		**SW846 ME/8015A Diesel Range Organics by GC/FID**							
X0148	XG.2001.175-2		Diesel Range Organics	ND	mg / Kg	1	25		02/08/01
0102072-01C		**SW846 8260A Purgeable VOCs by GC/MS**							
X0127	XG.2001.198-8	75-34-3	1,1 Dichloroethane	ND	mg / Kg	1	0.005		02/09/01
X0127	XG.2001.198-8	75-34-3	1,1 Dichloroethene	ND	mg / Kg	1	0.005		02/09/01
X0127	XG.2001.198-8	71-55-6	1,1,1 Trichloroethane	ND	mg / Kg	1	0.005		02/09/01
X0127	XG.2001.198-8	630-20-6	1,1,1,2 Tetrachloroethane	ND	mg / Kg	1	0.005		02/09/01
X0127	XG.2001.198-8	79-00-5	1,1,2 Trichloroethane	ND	mg / Kg	1	0.005		02/09/01
X0127	XG.2001.198-8	79-34-5	1,1,2,2 Tetrachloroethane	ND	mg / Kg	1	0.005		02/09/01
X0127	XG.2001.198-8	106-93-4	1,2 Dibromoethane (EDB)	ND	mg / Kg	1	0.005		02/09/01
X0127	XG.2001.198-8	95-50-1	1,2 Dichlorobenzene	ND	mg / Kg	1	0.005		02/09/01
X0127	XG.2001.198-8	107-06-2	1,2 Dichloroethane	ND	mg / Kg	1	0.005		02/09/01
X0127	XG.2001.198-8	78-87-5	1,2 Dichloropropane	ND	mg / Kg	1	0.005		02/09/01
X0127	XG.2001.198-8	96-18-4	1,2,3 Trichloropropane	ND	mg / Kg	1	0.005		02/09/01
X0127	XG.2001.198-8	95-63-6	1,2,4-Trimethylbenzene	ND	mg / Kg	1	0.005		02/09/01
X0127	XG.2001.198-8	541-73-1	1,3 Dichlorobenzene	ND	mg / Kg	1	0.005		02/09/01
X0127	XG.2001.198-8	108-67-8	1,3,5-Trimethylbenzene	ND	mg / Kg	1	0.005		02/09/01
X0127	XG.2001.198-8	764-41-0	1,4 Dichloro-2-butene	ND	mg / Kg	1	0.05		02/09/01
X0127	XG.2001.198-8	106-46-7	1,4 Dichlorobenzene	ND	mg / Kg	1	0.005		02/09/01
7	XG.2001.198-8	78-93-3	2-Butanone (MEK)	ND	mg / Kg	1	0.025		02/09/01

Member
NO REPRODUCTION OF THIS REPORT UNLESS THAN FULL IS REQUIRED WITHOUT WRITTEN CONSENT OF AAL
THIS REPORT MAY NOT BE PUBLISHED IN ANY MANNER BY THE CLIENT OR ANY OTHER THIRD PARTY WITHOUT AAL
PRIOR CONSENT. REFER TO ANY AGREEMENT OR PROPOSAL

RECEIVED FEB 2 6 2001

Client: **CH2MHILL**

Project: **0102072** **160660.02.FF.SA**

X0127	XG.2001.198-8	110-75-8	2-Chloroethylvinylether	ND	mg / Kg	1	0.025		02/09/01
X0127	XG.2001.198-8	591-78-6	2-Hexanone (MBK)	ND	mg / Kg	1	0.025		02/09/01
X0127	XG.2001.198-8	108-10-1	4-Methyl-2-pentanone (MIBK)	ND	mg / Kg	1	0.025		02/09/01
X0127	XG.2001.198-8	67-64-1	Acetone	0.12	mg / Kg	1	0.05		02/09/01
X0127	XG.2001.198-8	107-02-8	Acrolein	ND	mg / Kg	1	0.1		02/09/01
X0127	XG.2001.198-8	107-13-1	Acrylonitrile	ND	mg / Kg	1	0.1		02/09/01
X0127	XG.2001.198-8	71-43-2	Benzene	ND	mg / Kg	1	0.005		02/09/01
X0127	XG.2001.198-8	75-27-4	Bromodichloromethane	ND	mg / Kg	1	0.005		02/09/01
X0127	XG.2001.198-8	75-25-2	Bromoform	ND	mg / Kg	1	0.005		02/09/01
X0127	XG.2001.198-8	74-83-9	Bromomethane	ND	mg / Kg	1	0.025		02/09/01
X0127	XG.2001.198-8	75-15-0	Carbon disulfide	ND	mg / Kg	1	0.025		02/09/01
X0127	XG.2001.198-8	56-23-5	Carbon tetrachloride	ND	mg / Kg	1	0.005		02/09/01
X0127	XG.2001.198-8	108-90-7	Chlorobenzene	ND	mg / Kg	1	0.005		02/09/01
X0127	XG.2001.198-8	124-48-1	Chlorodibromomethane	ND	mg / Kg	1	0.005		02/09/01
X0127	XG.2001.198-8	75-00-3	Chloroethane	ND	mg / Kg	1	0.025		02/09/01
X0127	XG.2001.198-8	67-66-3	Chloroform	ND	mg / Kg	1	0.005		02/09/01
X0127	XG.2001.198-8	74-87-3	Chloromethane	ND	mg / Kg	1	0.025		02/09/01
X0127	XG.2001.198-8	156-59-2	cis-1,2 dichloroethene	ND	mg / Kg	1	0.005		02/09/01
X0127	XG.2001.198-8	10061-01-5	cis-1,3 dichloropropene	ND	mg / Kg	1	0.005		02/09/01
X0127	XG.2001.198-8	74-95-3	Dibromomethane	ND	mg / Kg	1	0.005		02/09/01
X0127	XG.2001.198-8	97-63-2	Ethyl methacrylate	ND	mg / Kg	1	0.025		02/09/01
X0127	XG.2001.198-8	100-41-4	Ethylbenzene	ND	mg / Kg	1	0.005		02/09/01
X0127	XG.2001.198-8		Freon 113	ND	mg / Kg	1	0.025		02/09/01
X0127	XG.2001.198-8	75-71-8	Freon 12	ND	mg / Kg	1	0.05		02/0
X0127	XG.2001.198-8	74-88-4	Iodomethane	ND	mg / Kg	1	0.025		02/09/01
X0127	XG.2001.198-8	1634-04-4	Methyl t-butyl ether (MTBE)	ND	mg / Kg	1	0.005		02/09/01
X0127	XG.2001.198-8	75-09-2	Methylene chloride	ND	mg / Kg	1	0.05		02/09/01
X0127	XG.2001.198-8	91-20-3	Naphthalene	ND	mg / Kg	1	0.025		02/09/01
X0127	XG.2001.198-8	95-47-6	o-Xylene	ND	mg / Kg	1	0.005		02/09/01
X0127	XG.2001.198-8	108-38-3/106-42	p/m Xylenes	ND	mg / Kg	1	0.01		02/09/01
X0127	XG.2001.198-8	100-42-5	Styrene	ND	mg / Kg	1	0.005		02/09/01
X0127	XG.2001.198-8	156-60-5	t-1,2 Dichloroethene	ND	mg / Kg	1	0.005		02/09/01
X0127	XG.2001.198-8	10061-02-6	t-1,3 Dichloropropene	ND	mg / Kg	1	0.005		02/09/01
X0127	XG.2001.198-8	127-18-4	Tetrachloroethene	ND	mg / Kg	1	0.005		02/09/01
X0127	XG.2001.198-8	108-88-3	Toluene	ND	mg / Kg	1	0.005		02/09/01
X0127	XG.2001.198-8	79-01-6	Trichloroethene	ND	mg / Kg	1	0.005		02/09/01
X0127	XG.2001.198-8	75-69-4	Trichlorofluoromethane	ND	mg / Kg	1	0.025		02/09/01
X0127	XG.2001.198-8	108-05-4	Vinyl acetate	ND	mg / Kg	1	0.025		02/09/01
X0127	XG.2001.198-8	75-01-4	Vinyl chloride	ND	mg / Kg	1	0.025		02/09/01

Client Sample ID ***ST 106 SB31 130'*** Sample Matrix ***SOIL*** Sample Collected *02/07/01 11:30:00*

QC Group	Run Sequence	CAS #	Analyte	Result	Units	Dilution Factor	Detection Limit	Code	Run Date
0102072-02A		**SW846 5030A/8015A GRO by GC/FID**							
X0150	XG.2001.174-5		Gasoline Range Organics	ND	mg / Kg	1	0.25		02/07/01

Assaigai Analytical Laboratories, Inc.

Certificate of Analysis

Client: **CH2MHILL**

Project: **0102072** **160660.02.FF.SA**

0102072-02B **SW846 ME/8015A Diesel Range Organics by GC/FID**

X0148	XG.2001.175-3		Diesel Range Organics	830	mg / Kg	1	25		02/08/01

0102072-02C **SW846 8260A Purgeable VOCs by GC/MS**

X0127	XG.2001.198-6	75-34-3	1,1 Dichloroethane	ND	mg / Kg	1	0.005		02/09/01
X0127	XG.2001.198-6	75-34-3	1,1 Dichloroethene	ND	mg / Kg	1	0.005		02/09/01
X0127	XG.2001.198-6	71-55-6	1,1,1 Trichloroethane	ND	mg / Kg	1	0.005		02/09/01
X0127	XG.2001.198-6	630-20-6	1,1,1,2 Tetrachloroethane	ND	mg / Kg	1	0.005		02/09/01
X0127	XG.2001.198-6	79-00-5	1,1,2 Trichloroethane	ND	mg / Kg	1	0.005		02/09/01
X0127	XG.2001.198-6	79-34-5	1,1,2,2 Tetrachloroethane	ND	mg / Kg	1	0.005		02/09/01
X0127	XG.2001.198-6	106-93-4	1,2 Dibromoethane (EDB)	ND	mg / Kg	1	0.005		02/09/01
X0127	XG.2001.198-6	95-50-1	1,2 Dichlorobenzene	ND	mg / Kg	1	0.005		02/09/01
X0127	XG.2001.198-6	107-06-2	1,2 Dichloroethane	ND	mg / Kg	1	0.005		02/09/01
X0127	XG.2001.198-6	78-87-5	1,2 Dichloropropane	ND	mg / Kg	1	0.005		02/09/01
X0127	XG.2001.198-6	96-18-4	1,2,3 Trichloropropane	ND	mg / Kg	1	0.005		02/09/01
X0127	XG.2001.198-6	95-63-6	1,2,4-Trimethylbenzene	ND	mg / Kg	1	0.005		02/09/01
X0127	XG.2001.198-6	541-73-1	1,3 Dichlorobenzene	ND	mg / Kg	1	0.005		02/09/01
X0127	XG.2001.198-6	108-67-8	1,3,5-Trimethylbenzene	ND	mg / Kg	1	0.005		02/09/01
X0127	XG.2001.198-6	764-41-0	1,4 Dichloro-2-butene	ND	mg / Kg	1	0.05		02/09/01
X0127	XG.2001.198-6	106-46-7	1,4 Dichlorobenzene	ND	mg / Kg	1	0.005		02/09/01
X0127	XG.2001.198-6	78-93-3	2-Butanone (MEK)	ND	mg / Kg	1	0.025		02/09/01
	XG.2001.198-6	110-75-8	2-Chloroethylvinylether	ND	mg / Kg	1	0.025		02/09/01
X0127	XG.2001.198-6	591-78-6	2-Hexanone (MBK)	ND	mg / Kg	1	0.025		02/09/01
X0127	XG.2001.198-6	108-10-1	4-Methyl-2-pentanone (MIBK)	ND	mg / Kg	1	0.025		02/09/01
X0127	XG.2001.198-6	67-64-1	Acetone	ND	mg / Kg	1	0.05		02/09/01
X0127	XG.2001.198-6	107-02-8	Acrolein	ND	mg / Kg	1	0.1		02/09/01
X0127	XG.2001.198-6	107-13-1	Acrylonitrile	ND	mg / Kg	1	0.1		02/09/01
X0127	XG.2001.198-6	71-43-2	Benzene	ND	mg / Kg	1	0.005		02/09/01
X0127	XG.2001.198-6	75-27-4	Bromodichloromethane	ND	mg / Kg	1	0.005		02/09/01
X0127	XG.2001.198-6	75-25-2	Bromoform	ND	mg / Kg	1	0.005		02/09/01
X0127	XG.2001.198-6	74-83-9	Bromomethane	ND	mg / Kg	1	0.025		02/09/01
X0127	XG.2001.198-6	75-15-0	Carbon disulfide	ND	mg / Kg	1	0.025		02/09/01
X0127	XG.2001.198-6	56-23-5	Carbon tetrachloride	ND	mg / Kg	1	0.005		02/09/01
X0127	XG.2001.198-6	108-90-7	Chlorobenzene	ND	mg / Kg	1	0.005		02/09/01
X0127	XG.2001.198-6	124-48-1	Chlorodibromomethane	ND	mg / Kg	1	0.005		02/09/01
X0127	XG.2001.198-6	75-00-3	Chloroethane	ND	mg / Kg	1	0.025		02/09/01
X0127	XG.2001.198-6	67-66-3	Chloroform	ND	mg / Kg	1	0.005		02/09/01
X0127	XG.2001.198-6	74-87-3	Chloromethane	ND	mg / Kg	1	0.025		02/09/01
X0127	XG.2001.198-6	156-59-2	cis-1,2 dichloroethene	ND	mg / Kg	1	0.005		02/09/01
X0127	XG.2001.198-6	10061-01-5	cis-1,3 dichloropropene	ND	mg / Kg	1	0.005		02/09/01
X0127	XG.2001.198-6	74-95-3	Dibromomethane	ND	mg / Kg	1	0.005		02/09/01
X0127	XG.2001.198-6	97-63-2	Ethyl methacrylate	ND	mg / Kg	1	0.025		02/09/01
X0127	XG.2001.198-6	100-41-4	Ethylbenzene	ND	mg / Kg	1	0.005		02/09/01
X0127	XG.2001.198-6		Freon 113	ND	mg / Kg	1	0.025		02/09/01
X0127	XG.2001.198-6	75-71-8	Freon 12	ND	mg / Kg	1	0.05		02/09/01
X0127	XG.2001.198-6	74-88-4	Iodomethane	ND	mg / Kg	1	0.025		02/09/01
[illegible]	XG.2001.198-6	1634-04-4	Methyl t-butyl ether (MTBE)	ND	mg / Kg	1	0.005		02/09/01
	XG.2001.198-6	75-09-2	Methylene chloride	ND	mg / Kg	1	0.05		02/09/01

Certificate of Analysis

Client: **CH2MHILL**

Project: **0102072** **160660.02.FF.SA**

X0127	XG.2001.198-6	91-20-3	Naphthalene	ND	mg / Kg	1	0.025		02/09/01
X0127	XG.2001.198-6	95-47-6	o-Xylene	ND	mg / Kg	1	0.005		02/09/01
X0127	XG.2001.198-6	108-38-3/106-42	p/m Xylenes	ND	mg / Kg	1	0.01		02/09/01
X0127	XG.2001.198-6	100-42-5	Styrene	ND	mg / Kg	1	0.005		02/09/01
X0127	XG.2001.198-6	156-60-5	t-1,2 Dichloroethene	ND	mg / Kg	1	0.005		02/09/01
X0127	XG.2001.198-6	10061-02-6	t-1,3 Dichloropropene	ND	mg / Kg	1	0.005		02/09/01
X0127	XG.2001.198-6	127-18-4	Tetrachloroethene	ND	mg / Kg	1	0.005		02/09/01
X0127	XG.2001.198-6	108-88-3	Toluene	ND	mg / Kg	1	0.005		02/09/01
X0127	XG.2001.198-6	79-01-6	Trichloroethene	ND	mg / Kg	1	0.005		02/09/01
X0127	XG.2001.198-6	75-69-4	Trichlorofluoromethane	ND	mg / Kg	1	0.025		02/09/01
X0127	XG.2001.198-6	108-05-4	Vinyl acetate	ND	mg / Kg	1	0.025		02/09/01
X0127	XG.2001.198-6	75-01-4	Vinyl chloride	ND	mg / Kg	1	0.025		02/09/01

0102072-02D **SW846 3550A/8270B SVOCs by GC/MS**

X0128	XG.2001.189-3	120-82-1	1,2,4-Trichlorobenzene	ND	mg / Kg	1	0.03		02/09/01
X0128	XG.2001.189-3	95-50-1	1,2-Dichlorobenzene	ND	mg / Kg	1	0.03		02/09/01
X0128	XG.2001.189-3	541-73-1	1,3-Dichlorobenzene	ND	mg / Kg	1	0.03		02/09/01
X0128	XG.2001.189-3	106-46-7	1,4-Dichlorobenzene	ND	mg / Kg	1	0.03		02/09/01
X0128	XG.2001.189-3	90-12-0	1-Methylnaphthalene	ND	mg / Kg	1	0.03		02/09/01
X0128	XG.2001.189-3	58-90-2	2,3,4,6-Tetrachlorophenol	ND	mg / Kg	1	1.5		02/09/01
X0128	XG.2001.189-3	95-95-4	2,4,5-Trichlorophenol	ND	mg / Kg	1	0.3		02/09/01
X0128	XG.2001.189-3	88-06-2	2,4,6-Trichlorophenol	ND	mg / Kg	1	0.3		02/09/01
X0128	XG.2001.189-3	120-83-2	2,4-Dichlorophenol	ND	mg / Kg	1	0.3		02/09
X0128	XG.2001.189-3	105-67-9	2,4-Dimethylphenol	ND	mg / Kg	1	0.03		02/09/01
X0128	XG.2001.189-3	51-28-5	2,4-Dinitrophenol	ND	mg / Kg	1	0.67		02/09/01
X0128	XG.2001.189-3	121-14-2	2,4-Dinitrotoluene	ND	mg / Kg	1	0.3		02/09/01
X0128	XG.2001.189-3	606-20-2	2,6-Dinitrotoluene	ND	mg / Kg	1	0.3		02/09/01
X0128	XG.2001.189-3	91-58-7	2-Chloronaphthalene	ND	mg / Kg	1	0.03		02/09/01
X0128	XG.2001.189-3	95-57-8	2-Chlorophenol	ND	mg / Kg	1	0.03		02/09/01
X0128	XG.2001.189-3	91-57-6	2-Methylnaphthalene	ND	mg / Kg	1	0.03		02/09/01
X0128	XG.2001.189-3	95-48-7	2-Methylphenol	ND	mg / Kg	1	0.03		02/09/01
X0128	XG.2001.189-3	88-74-4	2-Nitroaniline	ND	mg / Kg	1	0.3		02/09/01
X0128	XG.2001.189-3	88-75-5	2-Nitrophenol	ND	mg / Kg	1	0.3		02/09/01
X0128	XG.2001.189-3		3+4 Methylphenol	ND	mg / Kg	1	0.03		02/09/01
X0128	XG.2001.189-3	91-94-1	3,3-Dichlorobenzidine	ND	mg / Kg	1	0.3		02/09/01
X0128	XG.2001.189-3	99-09-2	3-Nitroaniline	ND	mg / Kg	1	0.3		02/09/01
X0128	XG.2001.189-3	534-52-1	4,6-Dinitro-2-methylphenol	ND	mg / Kg	1	0.3		02/09/01
X0128	XG.2001.189-3	101-55-3	4-Bromophenyl-phenylether	ND	mg / Kg	1	0.03		02/09/01
X0128	XG.2001.189-3	59-50-7	4-Chloro-3-methylphenol	ND	mg / Kg	1	0.3		02/09/01
X0128	XG.2001.189-3	106-47-8	4-Chloroaniline	ND	mg / Kg	1	0.3		02/09/01
X0128	XG.2001.189-3	7005-72-3	4-Chlorophenyl-phenylether	ND	mg / Kg	1	0.03		02/09/01
X0128	XG.2001.189-3	100-01-6	4-Nitroaniline	ND	mg / Kg	1	0.3		02/09/01
X0128	XG.2001.189-3	100-02-7	4-Nitrophenol	ND	mg / Kg	1	0.6		02/09/01
X0128	XG.2001.189-3	83-32-9	Acenaphthene	ND	mg / Kg	1	0.03		02/09/01
X0128	XG.2001.189-3	208-96-8	Acenaphthylene	ND	mg / Kg	1	0.03		02/09/01
X0128	XG.2001.189-3	62-53-3	Aniline	ND	mg / Kg	1	0.3		02/09/01
X0128	XG.2001.189-3	120-12-7	Anthracene	ND	mg / Kg	1	0.03		02/09/01

Certificate of Analysis

C[illegible]: CH2MHILL

Project: **0102072** **160660.02.FF.SA**

X0128	XG.2001.189-3		Azobenzene&1,2-Diphenylhydrazine	ND	mg / Kg	1	0.03		02/09/01
X0128	XG.2001.189-3	56-55-3	Benzo (a) anthracene	ND	mg / Kg	1	0.03		02/09/01
X0128	XG.2001.189-3	50-32-8	Benzo(a)pyrene	ND	mg / Kg	1	0.03		02/09/01
X0128	XG.2001.189-3		Benzo(b & k)fluoranthene	ND	mg / Kg	1	0.03		02/09/01
X0128	XG.2001.189-3	191-24-2	Benzo(g,h,i)perylene	ND	mg / Kg	1	0.3		02/09/01
X0128	XG.2001.189-3	64-85-0	Benzoic acid	ND	mg / Kg	1	3		02/09/01
X0128	XG.2001.189-3	100-51-6	Benzyl alcohol	ND	mg / Kg	1	1.5		02/09/01
X0128	XG.2001.189-3	111-44-4	bis (2-Chloroethyl) ether	ND	mg / Kg	1	0.03		02/09/01
X0128	XG.2001.189-3	111-91-1	bis(2-Chloroethoxy)methane	ND	mg / Kg	1	0.03		02/09/01
X0128	XG.2001.189-3	108-60-1	bis(2-Chloroisopropyl)ether	ND	mg / Kg	1	0.03		02/09/01
X0128	XG.2001.189-3	117-81-7	bis(2-Ethylhexyl)phthalate	1.6	mg / Kg	1	0.3		02/09/01
X0128	XG.2001.189-3	85-68-7	Butylbenzylphthalate	ND	mg / Kg	1	0.03		02/09/01
X0128	XG.2001.189-3	218-01-9	Chrysene	ND	mg / Kg	1	0.03		02/09/01
X0128	XG.2001.189-3	84-74-2	di-n-Butylphthalate	ND	mg / Kg	1	0.3		02/09/01
X0128	XG.2001.189-3	117-84-0	di-n-Octylpthalate	ND	mg / Kg	1	0.3		02/09/01
X0128	XG.2001.189-3	53-70-3	Dibenz(a,h)anthracene	ND	mg / Kg	1	0.3		02/09/01
X0128	XG.2001.189-3	132-64-9	Dibenzofuran	ND	mg / Kg	1	0.03		02/09/01
X0128	XG.2001.189-3	84-66-2	Diethylphthalate	ND	mg / Kg	1	0.03		02/09/01
X0128	XG.2001.189-3	131-11-3	Dimethylphthalate	ND	mg / Kg	1	0.03		02/09/01
X0128	XG.2001.189-3	206-44-0	Fluoranthene	ND	mg / Kg	1	0.03		02/09/01
X0128	XG.2001.189-3	86737	Fluorene	ND	mg / Kg	1	0.03		02/09/01
[illegible]	XG.2001.189-3	118-74-1	Hexachlorobenzene	ND	mg / Kg	1	0.03		02/09/01
[illegible]	XG.2001.189-3	87-68-3	Hexachlorobutadiene	ND	mg / Kg	1	0.03		02/09/01
X0128	XG.2001.189-3	77-47-4	Hexachlorocyclopentadiene	ND	mg / Kg	1	1.5		02/09/01
X0128	XG.2001.189-3	67-72-1	Hexachloroethane	ND	mg / Kg	1	0.03		02/09/01
X0128	XG.2001.189-3	193-39-5	Indeno(1,2,3-cd)pyrene	ND	mg / Kg	1	0.3		02/09/01
X0128	XG.2001.189-3	78-59-1	Isophorone	ND	mg / Kg	1	0.03		02/09/01
X0128	XG.2001.189-3	621-64-7	n-Nitroso-di-n-propylamine	ND	mg / Kg	1	0.03		02/09/01
X0128	XG.2001.189-3	62-75-9	n-Nitroso-dimethyl-amine	ND	mg / Kg	1	0.3		02/09/01
X0128	XG.2001.189-3	86-30-6	n-Nitrosodiphenylamine	0.075	mg / Kg	1	0.03		02/09/01
X0128	XG.2001.189-3	91-20-3	Naphthalene	ND	mg / Kg	1	0.03		02/09/01
X0128	XG.2001.189-3	98-95-3	Nitrobenzene	ND	mg / Kg	1	0.03		02/09/01
X0128	XG.2001.189-3	87-86-5	Pentachlorophenol	ND	mg / Kg	1	0.3		02/09/01
X0128	XG.2001.189-3	85-01-8	Phenanthrene	ND	mg / Kg	1	0.03		02/09/01
X0128	XG.2001.189-3	108-95-2	Phenol	ND	mg / Kg	1	0.3		02/09/01
X0128	XG.2001.189-3	129-00-0	Pyrene	ND	mg / Kg	1	0.03		02/09/01
X0128	XG.2001.189-3	110-86-1	Pyridine	ND	mg / Kg	1	0.3		02/09/01

Client Sample ID ***ST 106 SB31 140'*** Sample Matrix ***SOIL*** Sample Collected ***02/07/01 12:00:00***

QC Group	Run Sequence	CAS #	Analyte	Result	Units	Dilution Factor	Detection Limit	Code	Run Date
0102072-03A		**SW846 8260A Purgeable VOCs by GC/MS**							
X0127	XG.2001.198-7	75-34-3	1,1 Dichloroethane	ND	mg / Kg	1	0.005		02/09/01
[illegible]	XG.2001.198-7	75-34-3	1,1 Dichloroethene	ND	mg / Kg	1	0.005		02/09/01
[illegible]	XG.2001.198-7	71-55-6	1,1,1 Trichloroethane	ND	mg / Kg	1	0.005		02/09/01

Certificate of Analysis

Client: **CH2MHILL**

Project: **0102072** **160660.02.FF.SA**

X0127	XG.2001.198-7	630-20-6	1,1,1,2 Tetrachloroethane	ND	mg / Kg	1	0.005		02/09/01
X0127	XG.2001.198-7	79-00-5	1,1,2 Trichloroethane	ND	mg / Kg	1	0.005		02/09/01
X0127	XG.2001.198-7	79-34-5	1,1,2,2 Tetrachloroethane	ND	mg / Kg	1	0.005		02/09/01
X0127	XG.2001.198-7	106-93-4	1,2 Dibromoethane (EDB)	ND	mg / Kg	1	0.005		02/09/01
X0127	XG.2001.198-7	95-50-1	1,2 Dichlorobenzene	ND	mg / Kg	1	0.005		02/09/01
X0127	XG.2001.198-7	107-06-2	1,2 Dichloroethane	ND	mg / Kg	1	0.005		02/09/01
X0127	XG.2001.198-7	78-87-5	1,2 Dichloropropane	ND	mg / Kg	1	0.005		02/09/01
X0127	XG.2001.198-7	96-18-4	1,2,3 Trichloropropane	ND	mg / Kg	1	0.005		02/09/01
X0127	XG.2001.198-7	95-63-6	1,2,4-Trimethylbenzene	ND	mg / Kg	1	0.005		02/09/01
X0127	XG.2001.198-7	541-73-1	1,3 Dichlorobenzene	ND	mg / Kg	1	0.005		02/09/01
X0127	XG.2001.198-7	108-67-8	1,3,5-Trimethylbenzene	ND	mg / Kg	1	0.005		02/09/01
X0127	XG.2001.198-7	764-41-0	1,4 Dichloro-2-butene	ND	mg / Kg	1	0.05		02/09/01
X0127	XG.2001.198-7	106-46-7	1,4 Dichlorobenzene	ND	mg / Kg	1	0.005		02/09/01
X0127	XG.2001.198-7	78-93-3	2-Butanone (MEK)	ND	mg / Kg	1	0.025		02/09/01
X0127	XG.2001.198-7	110-75-8	2-Chloroethylvinylether	ND	mg / Kg	1	0.025		02/09/01
X0127	XG.2001.198-7	591-78-6	2-Hexanone (MBK)	ND	mg / Kg	1	0.025		02/09/01
X0127	XG.2001.198-7	108-10-1	4-Methyl-2-pentanone (MIBK)	ND	mg / Kg	1	0.025		02/09/01
X0127	XG.2001.198-7	67-64-1	Acetone	ND	mg / Kg	1	0.05		02/09/01
X0127	XG.2001.198-7	107-02-8	Acrolein	ND	mg / Kg	1	0.1		02/09/01
X0127	XG.2001.198-7	107-13-1	Acrylonitrile	ND	mg / Kg	1	0.1		02/09/01
X0127	XG.2001.198-7	71-43-2	Benzene	ND	mg / Kg	1	0.005		02/09/01
X0127	XG.2001.198-7	75-27-4	Bromodichloromethane	ND	mg / Kg	1	0.005		02/09/01
X0127	XG.2001.198-7	75-25-2	Bromoform	ND	mg / Kg	1	0.005		02/09/01
X0127	XG.2001.198-7	74-83-9	Bromomethane	ND	mg / Kg	1	0.025		02/0[illegible]
X0127	XG.2001.198-7	75-15-0	Carbon disulfide	ND	mg / Kg	1	0.025		02/09/01
X0127	XG.2001.198-7	56-23-5	Carbon tetrachloride	ND	mg / Kg	1	0.005		02/09/01
X0127	XG.2001.198-7	108-90-7	Chlorobenzene	ND	mg / Kg	1	0.005		02/09/01
X0127	XG.2001.198-7	124-48-1	Chlorodibromomethane	ND	mg / Kg	1	0.005		02/09/01
X0127	XG.2001.198-7	75-00-3	Chloroethane	ND	mg / Kg	1	0.025		02/09/01
X0127	XG.2001.198-7	67-66-3	Chloroform	ND	mg / Kg	1	0.005		02/09/01
X0127	XG.2001.198-7	74-87-3	Chloromethane	ND	mg / Kg	1	0.025		02/09/01
X0127	XG.2001.198-7	156-59-2	cis-1,2 dichloroethene	ND	mg / Kg	1	0.005		02/09/01
X0127	XG.2001.198-7	10061-01-5	cis-1,3 dichloropropene	ND	mg / Kg	1	0.005		02/09/01
X0127	XG.2001.198-7	74-95-3	Dibromomethane	ND	mg / Kg	1	0.005		02/09/01
X0127	XG.2001.198-7	97-63-2	Ethyl methacrylate	ND	mg / Kg	1	0.025		02/09/01
X0127	XG.2001.198-7	100-41-4	Ethylbenzene	ND	mg / Kg	1	0.005		02/09/01
X0127	XG.2001.198-7		Freon 113	ND	mg / Kg	1	0.025		02/09/01
X0127	XG.2001.198-7	75-71-8	Freon 12	ND	mg / Kg	1	0.05		02/09/01
X0127	XG.2001.198-7	74-88-4	Iodomethane	ND	mg / Kg	1	0.025		02/09/01
X0127	XG.2001.198-7	1634-04-4	Methyl t-butyl ether (MTBE)	ND	mg / Kg	1	0.005		02/09/01
X0127	XG.2001.198-7	75-09-2	Methylene chloride	ND	mg / Kg	1	0.05		02/09/01
X0127	XG.2001.198-7	91-20-3	Naphthalene	ND	mg / Kg	1	0.025		02/09/01
X0127	XG.2001.198-7	95-47-6	o-Xylene	ND	mg / Kg	1	0.005		02/09/01
X0127	XG.2001.198-7	108-38-3/106-42	p/m Xylenes	ND	mg / Kg	1	0.01		02/09/01
X0127	XG.2001.198-7	100-42-5	Styrene	ND	mg / Kg	1	0.005		02/09/01
X0127	XG.2001.198-7	156-60-5	t-1,2 Dichloroethene	ND	mg / Kg	1	0.005		02/09/01
X0127	XG.2001.198-7	10061-02-6	t-1,3 Dichloropropene	ND	mg / Kg	1	0.005		02/09/01
X0127	XG.2001.198-7	127-18-4	Tetrachloroethene	ND	mg / Kg	1	0.005		02/09/01

Certificate of Analysis

C... .: **CH2MHILL**

Project: **0102072** **160660.02.FF.SA**

X0127	XG.2001.198-7	108-88-3	Toluene	ND	mg / Kg	1	0.005		02/09/01
X0127	XG.2001.198-7	79-01-6	Trichloroethene	ND	mg / Kg	1	0.005		02/09/01
X0127	XG.2001.198-7	75-69-4	Trichlorofluoromethane	ND	mg / Kg	1	0.025		02/09/01
X0127	XG.2001.198-7	108-05-4	Vinyl acetate	ND	mg / Kg	1	0.025		02/09/01
X0127	XG.2001.198-7	75-01-4	Vinyl chloride	ND	mg / Kg	1	0.025		02/09/01

**** Sample specific Detection Limit is determined by multiplying the sample Dilution Factor by the listed Reporting Detection Limit. ****

**** ND = Not detected: less than the sample specific Detection Limit. Results relate only to the items tested. ****

Assaigai Analytical Laboratories, Inc.

Quality Control Summary

RECEIVED FEB 2 6 2001

Explanation of codes	
D	*Not applicable due to sample dilution*
L	*Not applicable due to MDL proximity*

Client: CH2MHILL

Project: 0102072 160660.02.FF.SA

QC Type **LCS: Lab Control Spike** QC Matrix **SOLID**

QC Group	Run Sequence	CAS #	Analyte	Result	Units	Dilution Factor	Detection Limit	Code	Run Date
X0127-005		**SW846 8260A Purgeable VOCs by GC/MS**							
X0127	XG.2001.69-5	75-34-3	1,1 Dichloroethene	109	% Recovery	1	NA		01/18/01
X0127	XG.2001.69-5	106-46-7	1,4 Dichlorobenzene	100	% Recovery	1	NA		01/18/01
X0127	XG.2001.69-5	71-43-2	Benzene	113	% Recovery	1	NA		01/18/01
X0127	XG.2001.69-5	108-90-7	Chlorobenzene	106	% Recovery	1	NA		01/18/01
X0127	XG.2001.69-5	108-88-3	Toluene	108	% Recovery	1	NA		01/18/01
X0127	XG.2001.69-5	79-01-6	Trichloroethene	111	% Recovery	1	NA		01/18/01
X0128-002		**SW846 3550A/8270B SVOCs by GC/MS**							
X0128	XG.2001.83-2	120-82-1	1,2,4-Trichlorobenzene	72	% Recovery	1	NA		01/21/01
X0128	XG.2001.83-2	106-46-7	1,4-Dichlorobenzene	77	% Recovery	1	NA		01/21/01
X0128	XG.2001.83-2	121-14-2	2,4-Dinitrotoluene	79	% Recovery	1	NA		01/21/01
X0128	XG.2001.83-2	95-57-8	2-Chlorophenol	84	% Recovery	1	NA		01/21/01
X0128	XG.2001.83-2	59-50-7	4-Chloro-3-methylphenol	84	% Recovery	1	NA		01/21/01
X0128	XG.2001.83-2	100-02-7	4-Nitrophenol	94	% Recovery	1	NA		01/21/01
X0128	XG.2001.83-2	83-32-9	Acenaphthene	89	% Recovery	1	NA		01/21/01
X0128	XG.2001.83-2	117-84-0	di-n-Octylpthalate	95	% Recovery	1	NA		01/21/01
X0128	XG.2001.83-2	621-64-7	n-Nitroso-di-n-propylamine	81	% Recovery	1	NA		01/21/01
	XG.2001.83-2	87-86-5	Pentachlorophenol	96	% Recovery	1	NA		01/21/01
X0128	XG.2001.83-2	108-95-2	Phenol	77	% Recovery	1	NA		01/21/01
X0128	XG.2001.83-2	129-00-0	Pyrene	89	% Recovery	1	NA		01/21/01
X0148-002		**SW846 ME/8015A Diesel Range Organics by GC/FID**							
X0148	XG.2001.169-2		Diesel Range Organics	90	% Recovery	1	NA		02/07/01

QC Type **LCSD: Lab Control Spike Duplicate Accuracy** QC Matrix **SOLID**

QC Group	Run Sequence	CAS #	Analyte	Result	Units	Dilution Factor	Detection Limit	Code	Run Date
X0127-006		**SW846 8260A Purgeable VOCs by GC/MS**							
X0127	XG.2001.69-6	75-34-3	1,1 Dichloroethene	110	% Recovery	1	NA		01/18/01
X0127	XG.2001.69-6	106-46-7	1,4 Dichlorobenzene	108	% Recovery	1	NA		01/18/01
X0127	XG.2001.69-6	71-43-2	Benzene	115	% Recovery	1	NA		01/18/01
X0127	XG.2001.69-6	108-90-7	Chlorobenzene	113	% Recovery	1	NA		01/18/01
X0127	XG.2001.69-6	108-88-3	Toluene	113	% Recovery	1	NA		01/18/01
X0127	XG.2001.69-6	79-01-6	Trichloroethene	116	% Recovery	1	NA		01/18/01
X0128-003		**SW846 3550A/8270B SVOCs by GC/MS**							
X0128	XG.2001.83-3	120-82-1	1,2,4-Trichlorobenzene	68	% Recovery	1	NA		01/21/01
X0128	XG.2001.83-3	106-46-7	1,4-Dichlorobenzene	71	% Recovery	1	NA		01/21/01
X0128	XG.2001.83-3	121-14-2	2,4-Dinitrotoluene	78	% Recovery	1	NA		01/21/01
X0128	XG.2001.83-3	95-57-8	2-Chlorophenol	79	% Recovery	1	NA		01/21/01
X0128	XG.2001.83-3	59-50-7	4-Chloro-3-methylphenol	81	% Recovery	1	NA		01/21/01
	XG.2001.83-3	100-02-7	4-Nitrophenol	91	% Recovery	1	NA		01/21/01

Quality Control Summary

Explanation of codes	
D	*Not applicable due to sample dilutio*
L	*Not applicable due to MDL proxin*

Client: **CH2MHILL**

Project: **0102072** **160660.02.FF.SA**

X0128	XG.2001.83-3	83-32-9	Acenaphthene	87	% Recovery	1	NA		01/21/01
X0128	XG.2001.83-3	117-84-0	di-n-Octylpthalate	94	% Recovery	1	NA		01/21/01
X0128	XG.2001.83-3	621-64-7	n-Nitroso-di-n-propylamine	78	% Recovery	1	NA		01/21/01
X0128	XG.2001.83-3	87-86-5	Pentachlorophenol	92	% Recovery	1	NA		01/21/01
X0128	XG.2001.83-3	108-95-2	Phenol	72	% Recovery	1	NA		01/21/01
X0128	XG.2001.83-3	129-00-0	Pyrene	87	% Recovery	1	NA		01/21/01
X0148-003		**SW846 ME/8015A Diesel Range Organics by GC/FID**							
X0148	XG.2001.169-3		Diesel Range Organics	91	% Recovery	1	NA		02/07/01
X0150-003		**SW846 5030A/8015A GRO by GC/FID**							
X0150	XG.2001.174-3		Gasoline Range Organics	92	% Recovery	1	NA		02/07/01

QC Type **LCSD: Lab Control Spike Duplicate Precision** QC Matrix **SOLID**

QC Group	Run Sequence	CAS #	Analyte	Result	Units	Dilution Factor	Detection Limit	Code	Run Date
X0127-006		**SW846 8260A Purgeable VOCs by GC/MS**							
X0127	XG.2001.69-6	75-34-3	1,1 Dichloroethene	< 1	RPD	1	NA		01/18/01
X0127	XG.2001.69-6	106-46-7	1,4 Dichlorobenzene	7	RPD	1	NA		01/18/01
X0127	XG.2001.69-6	71-43-2	Benzene	2	RPD	1	NA		01/18/01
X0127	XG.2001.69-6	108-90-7	Chlorobenzene	7	RPD	1	NA		01/18/01
X0127	XG.2001.69-6	108-88-3	Toluene	5	RPD	1	NA		01/18/01
X0127	XG.2001.69-6	79-01-6	Trichloroethene	4	RPD	1	NA		01/1
X0128-003		**SW846 3550A/8270B SVOCs by GC/MS**							
X0128	XG.2001.83-3	120-82-1	1,2,4-Trichlorobenzene	6	RPD	1	NA		01/21/01
X0128	XG.2001.83-3	106-46-7	1,4-Dichlorobenzene	7	RPD	1	NA		01/21/01
X0128	XG.2001.83-3	121-14-2	2,4-Dinitrotoluene	< 1	RPD	1	NA		01/21/01
X0128	XG.2001.83-3	95-57-8	2-Chlorophenol	6	RPD	1	NA		01/21/01
X0128	XG.2001.83-3	59-50-7	4-Chloro-3-methylphenol	3	RPD	1	NA		01/21/01
X0128	XG.2001.83-3	100-02-7	4-Nitrophenol	3	RPD	1	NA		01/21/01
X0128	XG.2001.83-3	83-32-9	Acenaphthene	3	RPD	1	NA		01/21/01
X0128	XG.2001.83-3	117-84-0	di-n-Octylpthalate	< 1	RPD	1	NA		01/21/01
X0128	XG.2001.83-3	621-64-7	n-Nitroso-di-n-propylamine	4	RPD	1	NA		01/21/01
X0128	XG.2001.83-3	87-86-5	Pentachlorophenol	4	RPD	1	NA		01/21/01
X0128	XG.2001.83-3	108-95-2	Phenol	7	RPD	1	NA		01/21/01
X0128	XG.2001.83-3	129-00-0	Pyrene	3	RPD	1	NA		01/21/01
X0148-003		**SW846 ME/8015A Diesel Range Organics by GC/FID**							
X0148	XG.2001.169-3		Diesel Range Organics	1	RPD	1	NA		02/07/01
X0150-003		**SW846 5030A/8015A GRO by GC/FID**							
X0150	XG.2001.174-3		Gasoline Range Organics	7	RPD	1	NA		02/07/01

Quality Control Summary

Client: **CH2MHILL**

Project: **0102072** **160660.02.FF.SA**

Explanation of codes	
D	*Not applicable due to sample dilution*
L	*Not applicable due to MDL proximity*

QC Type **MB: Method Blank** QC Matrix **SOLID**

QC Group	Run Sequence	CAS #	Analyte	Result	Units	Dilution Factor	Detection Limit	Code	Run Date
X0127-001		**SW846 8260A Purgeable VOCs by GC/MS**							
X0127	XG.2001.69-1	75-34-3	1,1 Dichloroethane	ND	mg / Kg	1	0.005		01/18/01
X0127	XG.2001.69-1	75-34-3	1,1 Dichloroethene	ND	mg / Kg	1	0.005		01/18/01
X0127	XG.2001.69-1	71-55-6	1,1,1 Trichloroethane	ND	mg / Kg	1	0.005		01/18/01
X0127	XG.2001.69-1	630-20-6	1,1,1,2 Tetrachloroethane	ND	mg / Kg	1	0.005		01/18/01
X0127	XG.2001.69-1	79-00-5	1,1,2 Trichloroethane	ND	mg / Kg	1	0.005		01/18/01
X0127	XG.2001.69-1	79-34-5	1,1,2,2 Tetrachloroethane	ND	mg / Kg	1	0.005		01/18/01
X0127	XG.2001.69-1	106-93-4	1,2 Dibromoethane (EDB)	ND	mg / Kg	1	0.005		01/18/01
X0127	XG.2001.69-1	95-50-1	1,2 Dichlorobenzene	ND	mg / Kg	1	0.005		01/18/01
X0127	XG.2001.69-1	107-06-2	1,2 Dichloroethane	ND	mg / Kg	1	0.005		01/18/01
X0127	XG.2001.69-1	78-87-5	1,2 Dichloropropane	ND	mg / Kg	1	0.005		01/18/01
X0127	XG.2001.69-1	96-18-4	1,2,3 Trichloropropane	ND	mg / Kg	1	0.005		01/18/01
X0127	XG.2001.69-1	95-63-6	1,2,4-Trimethylbenzene	ND	mg / Kg	1	0.005		01/18/01
X0127	XG.2001.69-1	541-73-1	1,3 Dichlorobenzene	ND	mg / Kg	1	0.005		01/18/01
X0127	XG.2001.69-1	108-67-8	1,3,5-Trimethylbenzene	ND	mg / Kg	1	0.005		01/18/01
X0127	XG.2001.69-1	764-41-0	1,4 Dichloro-2-butene	ND	mg / Kg	1	0.05		01/18/01
X0127	XG.2001.69-1	106-46-7	1,4 Dichlorobenzene	ND	mg / Kg	1	0.005		01/18/01
[illegible]	XG.2001.69-1	78-93-3	2-Butanone (MEK)	ND	mg / Kg	1	0.025		01/18/01
[illegible]	XG.2001.69-1	110-75-8	2-Chloroethylvinylether	ND	mg / Kg	1	0.025		01/18/01
X0127	XG.2001.69-1	591-78-6	2-Hexanone (MBK)	ND	mg / Kg	1	0.025		01/18/01
X0127	XG.2001.69-1	108-10-1	4-Methyl-2-pentanone (MIBK)	ND	mg / Kg	1	0.025		01/18/01
X0127	XG.2001.69-1	67-64-1	Acetone	ND	mg / Kg	1	0.05		01/18/01
X0127	XG.2001.69-1	107-02-8	Acrolein	ND	mg / Kg	1	0.1		01/18/01
X0127	XG.2001.69-1	107-13-1	Acrylonitrile	ND	mg / Kg	1	0.1		01/18/01
X0127	XG.2001.69-1	71-43-2	Benzene	ND	mg / Kg	1	0.005		01/18/01
X0127	XG.2001.69-1	75-27-4	Bromodichloromethane	ND	mg / Kg	1	0.005		01/18/01
X0127	XG.2001.69-1	75-25-2	Bromoform	ND	mg / Kg	1	0.005		01/18/01
X0127	XG.2001.69-1	74-83-9	Bromomethane	ND	mg / Kg	1	0.025		01/18/01
X0127	XG.2001.69-1	75-15-0	Carbon disulfide	ND	mg / Kg	1	0.025		01/18/01
X0127	XG.2001.69-1	56-23-5	Carbon tetrachloride	ND	mg / Kg	1	0.005		01/18/01
X0127	XG.2001.69-1	108-90-7	Chlorobenzene	ND	mg / Kg	1	0.005		01/18/01
X0127	XG.2001.69-1	124-48-1	Chlorodibromomethane	ND	mg / Kg	1	0.005		01/18/01
X0127	XG.2001.69-1	75-00-3	Chloroethane	ND	mg / Kg	1	0.025		01/18/01
X0127	XG.2001.69-1	67-66-3	Chloroform	ND	mg / Kg	1	0.005		01/18/01
X0127	XG.2001.69-1	74-87-3	Chloromethane	ND	mg / Kg	1	0.025		01/18/01
X0127	XG.2001.69-1	156-59-2	cis-1,2 dichloroethene	ND	mg / Kg	1	0.005		01/18/01
X0127	XG.2001.69-1	10061-01-5	cis-1,3 dichloropropene	ND	mg / Kg	1	0.005		01/18/01
X0127	XG.2001.69-1	74-95-3	Dibromomethane	ND	mg / Kg	1	0.005		01/18/01
X0127	XG.2001.69-1	97-63-2	Ethyl methacrylate	ND	mg / Kg	1	0.025		01/18/01
X0127	XG.2001.69-1	100-41-4	Ethylbenzene	ND	mg / Kg	1	0.005		01/18/01
X0127	XG.2001.69-1		Freon 113	ND	mg / Kg	1	0.025		01/18/01
X0127	XG.2001.69-1	75-71-8	Freon 12	ND	mg / Kg	1	0.05		01/18/01
X0127	XG.2001.69-1	74-88-4	Iodomethane	ND	mg / Kg	1	0.025		01/18/01
[illegible]	XG.2001.69-1	1634-04-4	Methyl t-butyl ether (MTBE)	ND	mg / Kg	1	0.005		01/18/01

Quality Control Summary

Client: **CH2MHILL**

Project: **0102072** **160660.02.FF.SA**

Explanation of codes	
D	*Not applicable due to sample dilut*
L	*Not applicable due to MDL proxin*

X0127	XG.2001.69-1	75-09-2	Methylene chloride	ND	mg / Kg	1	0.05		01/18/01
X0127	XG.2001.69-1	91-20-3	Naphthalene	ND	mg / Kg	1	0.025		01/18/01
X0127	XG.2001.69-1	95-47-6	o-Xylene	ND	mg / Kg	1	0.005		01/18/01
X0127	XG.2001.69-1	108-38-3/106-42	p/m Xylenes	ND	mg / Kg	1	0.01		01/18/01
X0127	XG.2001.69-1	100-42-5	Styrene	ND	mg / Kg	1	0.005		01/18/01
X0127	XG.2001.69-1	156-60-5	t-1,2 Dichloroethene	ND	mg / Kg	1	0.005		01/18/01
X0127	XG.2001.69-1	10061-02-6	t-1,3 Dichloropropene	ND	mg / Kg	1	0.005		01/18/01
X0127	XG.2001.69-1	127-18-4	Tetrachloroethene	ND	mg / Kg	1	0.005		01/18/01
X0127	XG.2001.69-1	108-88-3	Toluene	ND	mg / Kg	1	0.005		01/18/01
X0127	XG.2001.69-1	79-01-6	Trichloroethene	ND	mg / Kg	1	0.005		01/18/01
X0127	XG.2001.69-1	75-69-4	Trichlorofluoromethane	ND	mg / Kg	1	0.025		01/18/01
X0127	XG.2001.69-1	108-05-4	Vinyl acetate	ND	mg / Kg	1	0.025		01/18/01
X0127	XG.2001.69-1	75-01-4	Vinyl chloride	ND	mg / Kg	1	0.025		01/18/01

X0127-011 **SW846 8260A Purgeable VOCs by GC/MS**

X0127	XG.2001.80-1	75-34-3	1,1 Dichloroethane	ND	mg / Kg	1	0.005		01/22/01
X0127	XG.2001.80-1	75-34-3	1,1 Dichloroethene	ND	mg / Kg	1	0.005		01/22/01
X0127	XG.2001.80-1	71-55-6	1,1,1 Trichloroethane	ND	mg / Kg	1	0.005		01/22/01
X0127	XG.2001.80-1	630-20-6	1,1,1,2 Tetrachloroethane	ND	mg / Kg	1	0.005		01/22/01
X0127	XG.2001.80-1	79-00-5	1,1,2 Trichloroethane	ND	mg / Kg	1	0.005		01/22/01
X0127	XG.2001.80-1	79-34-5	1,1,2,2 Tetrachloroethane	ND	mg / Kg	1	0.005		01/22/01
X0127	XG.2001.80-1	106-93-4	1,2 Dibromoethane (EDB)	ND	mg / Kg	1	0.005		01/22/01
X0127	XG.2001.80-1	95-50-1	1,2 Dichlorobenzene	ND	mg / Kg	1	0.005		01/22/01
X0127	XG.2001.80-1	107-06-2	1,2 Dichloroethane	ND	mg / Kg	1	0.005		01/22/01
X0127	XG.2001.80-1	78-87-5	1,2 Dichloropropane	ND	mg / Kg	1	0.005		01/2
X0127	XG.2001.80-1	96-18-4	1,2,3 Trichloropropane	ND	mg / Kg	1	0.005		01/22/01
X0127	XG.2001.80-1	95-63-6	1,2,4-Trimethylbenzene	ND	mg / Kg	1	0.005		01/22/01
X0127	XG.2001.80-1	541-73-1	1,3 Dichlorobenzene	ND	mg / Kg	1	0.005		01/22/01
X0127	XG.2001.80-1	108-67-8	1,3,5-Trimethylbenzene	ND	mg / Kg	1	0.005		01/22/01
X0127	XG.2001.80-1	764-41-0	1,4 Dichloro-2-butene	ND	mg / Kg	1	0.05		01/22/01
X0127	XG.2001.80-1	106-46-7	1,4 Dichlorobenzene	ND	mg / Kg	1	0.005		01/22/01
X0127	XG.2001.80-1	78-93-3	2-Butanone (MEK)	ND	mg / Kg	1	0.025		01/22/01
X0127	XG.2001.80-1	110-75-8	2-Chloroethylvinylether	ND	mg / Kg	1	0.025		01/22/01
X0127	XG.2001.80-1	591-78-6	2-Hexanone (MBK)	ND	mg / Kg	1	0.025		01/22/01
X0127	XG.2001.80-1	108-10-1	4-Methyl-2-pentanone (MIBK)	ND	mg / Kg	1	0.025		01/22/01
X0127	XG.2001.80-1	67-64-1	Acetone	ND	mg / Kg	1	0.05		01/22/01
X0127	XG.2001.80-1	107-02-8	Acrolein	ND	mg / Kg	1	0.1		01/22/01
X0127	XG.2001.80-1	107-13-1	Acrylonitrile	ND	mg / Kg	1	0.1		01/22/01
X0127	XG.2001.80-1	71-43-2	Benzene	ND	mg / Kg	1	0.005		01/22/01
X0127	XG.2001.80-1	75-27-4	Bromodichloromethane	ND	mg / Kg	1	0.005		01/22/01
X0127	XG.2001.80-1	75-25-2	Bromoform	ND	mg / Kg	1	0.005		01/22/01
X0127	XG.2001.80-1	74-83-9	Bromomethane	ND	mg / Kg	1	0.025		01/22/01
X0127	XG.2001.80-1	75-15-0	Carbon disulfide	ND	mg / Kg	1	0.025		01/22/01
X0127	XG.2001.80-1	56-23-5	Carbon tetrachloride	ND	mg / Kg	1	0.005		01/22/01
X0127	XG.2001.80-1	108-90-7	Chlorobenzene	ND	mg / Kg	1	0.005		01/22/01
X0127	XG.2001.80-1	124-48-1	Chlorodibromomethane	ND	mg / Kg	1	0.005		01/22/01
X0127	XG.2001.80-1	75-00-3	Chloroethane	ND	mg / Kg	1	0.025		01/22/01
X0127	XG.2001.80-1	67-66-3	Chloroform	ND	mg / Kg	1	0.005		01/22/01
X0127	XG.2001.80-1	74-87-3	Chloromethane	ND	mg / Kg	1	0.025		01/22/01
X0127	XG.2001.80-1	156-59-2	cis-1,2 dichloroethene	ND	mg / Kg	1	0.005		01/22

Quality Control Summary

Explanation of codes	
D	*Not applicable due to sample dilution*
L	*Not applicable due to MDL proximity*

Client: **CH2MHILL**

ct: **0102072** **160660.02.FF.SA**

X0127	XG.2001.80-1	10061-01-5	cis-1,3 dichloropropene	ND	mg / Kg	1	0.005		01/22/01
X0127	XG.2001.80-1	74-95-3	Dibromomethane	ND	mg / Kg	1	0.005		01/22/01
X0127	XG.2001.80-1	97-63-2	Ethyl methacrylate	ND	mg / Kg	1	0.025		01/22/01
X0127	XG.2001.80-1	100-41-4	Ethylbenzene	ND	mg / Kg	1	0.005		01/22/01
X0127	XG.2001.80-1		Freon 113	ND	mg / Kg	1	0.025		01/22/01
X0127	XG.2001.80-1	75-71-8	Freon 12	ND	mg / Kg	1	0.05		01/22/01
X0127	XG.2001.80-1	74-88-4	Iodomethane	ND	mg / Kg	1	0.025		01/22/01
X0127	XG.2001.80-1	1634-04-4	Methyl t-butyl ether (MTBE)	ND	mg / Kg	1	0.005		01/22/01
X0127	XG.2001.80-1	75-09-2	Methylene chloride	ND	mg / Kg	1	0.05		01/22/01
X0127	XG.2001.80-1	91-20-3	Naphthalene	ND	mg / Kg	1	0.025		01/22/01
X0127	XG.2001.80-1	95-47-6	o-Xylene	ND	mg / Kg	1	0.005		01/22/01
X0127	XG.2001.80-1	108-38-3/106-42	p/m Xylenes	ND	mg / Kg	1	0.01		01/22/01
X0127	XG.2001.80-1	100-42-5	Styrene	ND	mg / Kg	1	0.005		01/22/01
X0127	XG.2001.80-1	156-60-5	t-1,2 Dichloroethene	ND	mg / Kg	1	0.005		01/22/01
X0127	XG.2001.80-1	10061-02-6	t-1,3 Dichloropropene	ND	mg / Kg	1	0.005		01/22/01
X0127	XG.2001.80-1	127-18-4	Tetrachloroethene	ND	mg / Kg	1	0.005		01/22/01
X0127	XG.2001.80-1	108-88-3	Toluene	ND	mg / Kg	1	0.005		01/22/01
X0127	XG.2001.80-1	79-01-6	Trichloroethene	ND	mg / Kg	1	0.005		01/22/01
X0127	XG.2001.80-1	75-69-4	Trichlorofluoromethane	ND	mg / Kg	1	0.025		01/22/01
X0127	XG.2001.80-1	108-05-4	Vinyl acetate	ND	mg / Kg	1	0.025		01/22/01
X0127	XG.2001.80-1	75-01-4	Vinyl chloride	ND	mg / Kg	1	0.025		01/22/01
X0127-014		**SW846 8260A Purgeable VOCs by GC/MS**							
	XG.2001.80-3	75-34-3	1,1 Dichloroethane	ND	mg / Kg	1	0.005		01/22/01
	XG.2001.80-3	75-34-3	1,1 Dichloroethene	ND	mg / Kg	1	0.005		01/22/01
X0127	XG.2001.80-3	71-55-6	1,1,1 Trichloroethane	ND	mg / Kg	1	0.005		01/22/01
X0127	XG.2001.80-3	630-20-6	1,1,1,2 Tetrachloroethane	ND	mg / Kg	1	0.005		01/22/01
X0127	XG.2001.80-3	79-00-5	1,1,2 Trichloroethane	ND	mg / Kg	1	0.005		01/22/01
X0127	XG.2001.80-3	79-34-5	1,1,2,2 Tetrachloroethane	ND	mg / Kg	1	0.005		01/22/01
X0127	XG.2001.80-3	106-93-4	1,2 Dibromoethane (EDB)	ND	mg / Kg	1	0.005		01/22/01
X0127	XG.2001.80-3	95-50-1	1,2 Dichlorobenzene	ND	mg / Kg	1	0.005		01/22/01
X0127	XG.2001.80-3	107-06-2	1,2 Dichloroethane	ND	mg / Kg	1	0.005		01/22/01
X0127	XG.2001.80-3	78-87-5	1,2 Dichloropropane	ND	mg / Kg	1	0.005		01/22/01
X0127	XG.2001.80-3	96-18-4	1,2,3 Trichloropropane	ND	mg / Kg	1	0.005		01/22/01
X0127	XG.2001.80-3	95-63-6	1,2,4-Trimethylbenzene	ND	mg / Kg	1	0.005		01/22/01
X0127	XG.2001.80-3	541-73-1	1,3 Dichlorobenzene	ND	mg / Kg	1	0.005		01/22/01
X0127	XG.2001.80-3	108-67-8	1,3,5-Trimethylbenzene	ND	mg / Kg	1	0.005		01/22/01
X0127	XG.2001.80-3	764-41-0	1,4 Dichloro-2-butene	ND	mg / Kg	1	0.05		01/22/01
X0127	XG.2001.80-3	106-46-7	1,4 Dichlorobenzene	ND	mg / Kg	1	0.005		01/22/01
X0127	XG.2001.80-3	78-93-3	2-Butanone (MEK)	ND	mg / Kg	1	0.025		01/22/01
X0127	XG.2001.80-3	110-75-8	2-Chloroethylvinylether	ND	mg / Kg	1	0.025		01/22/01
X0127	XG.2001.80-3	591-78-6	2-Hexanone (MBK)	ND	mg / Kg	1	0.025		01/22/01
X0127	XG.2001.80-3	108-10-1	4-Methyl-2-pentanone (MIBK)	ND	mg / Kg	1	0.025		01/22/01
X0127	XG.2001.80-3	67-64-1	Acetone	ND	mg / Kg	1	0.05		01/22/01
X0127	XG.2001.80-3	107-02-8	Acrolein	ND	mg / Kg	1	0.1		01/22/01
X0127	XG.2001.80-3	107-13-1	Acrylonitrile	ND	mg / Kg	1	0.1		01/22/01
X0127	XG.2001.80-3	71-43-2	Benzene	ND	mg / Kg	1	0.005		01/22/01
X0127	XG.2001.80-3	75-27-4	Bromodichloromethane	ND	mg / Kg	1	0.005		01/22/01
X0127	XG.2001.80-3	75-25-2	Bromoform	ND	mg / Kg	1	0.005		01/22/01
	XG.2001.80-3	74-83-9	Bromomethane	ND	mg / Kg	1	0.025		01/22/01

Quality Control Summary

Client: **CH2MHILL**

Project: **0102072** **160660.02.FF.SA**

Explanation of codes

D	*Not applicable due to sample dilutio*
L	*Not applicable due to MDL proxim*

X0127	XG.2001.80-3	75-15-0	Carbon disulfide	ND	mg / Kg	1	0.025		01/22/01
X0127	XG.2001.80-3	56-23-5	Carbon tetrachloride	ND	mg / Kg	1	0.005		01/22/01
X0127	XG.2001.80-3	108-90-7	Chlorobenzene	ND	mg / Kg	1	0.005		01/22/01
X0127	XG.2001.80-3	124-48-1	Chlorodibromomethane	ND	mg / Kg	1	0.005		01/22/01
X0127	XG.2001.80-3	75-00-3	Chloroethane	ND	mg / Kg	1	0.025		01/22/01
X0127	XG.2001.80-3	67-66-3	Chloroform	ND	mg / Kg	1	0.005		01/22/01
X0127	XG.2001.80-3	74-87-3	Chloromethane	ND	mg / Kg	1	0.025		01/22/01
X0127	XG.2001.80-3	156-59-2	cis-1,2 dichloroethene	ND	mg / Kg	1	0.005		01/22/01
X0127	XG.2001.80-3	10061-01-5	cis-1,3 dichloropropene	ND	mg / Kg	1	0.005		01/22/01
X0127	XG.2001.80-3	74-95-3	Dibromomethane	ND	mg / Kg	1	0.005		01/22/0
X0127	XG.2001.80-3	97-63-2	Ethyl methacrylate	ND	mg / Kg	1	0.025		01/22/0
X0127	XG.2001.80-3	100-41-4	Ethylbenzene	ND	mg / Kg	1	0.005		01/22/0
X0127	XG.2001.80-3		Freon 113	ND	mg / Kg	1	0.025		01/22/0
X0127	XG.2001.80-3	75-71-8	Freon 12	ND	mg / Kg	1	0.05		01/22/0
X0127	XG.2001.80-3	74-88-4	Iodomethane	ND	mg / Kg	1	0.025		01/22/0
X0127	XG.2001.80-3	1634-04-4	Methyl t-butyl ether (MTBE)	ND	mg / Kg	1	0.005		01/22/0
X0127	XG.2001.80-3	75-09-2	Methylene chloride	ND	mg / Kg	1	0.05		01/22/0
X0127	XG.2001.80-3	91-20-3	Naphthalene	ND	mg / Kg	1	0.025		01/22/0
X0127	XG.2001.80-3	95-47-6	o-Xylene	ND	mg / Kg	1	0.005		01/22/0
X0127	XG.2001.80-3	108-38-3/106-42	p/m Xylenes	ND	mg / Kg	1	0.01		01/22/0
X0127	XG.2001.80-3	100-42-5	Styrene	ND	mg / Kg	1	0.005		01/22/0
X0127	XG.2001.80-3	156-60-5	t-1,2 Dichloroethene	ND	mg / Kg	1	0.005		01/22/0
X0127	XG.2001.80-3	10061-02-6	t-1,3 Dichloropropene	ND	mg / Kg	1	0.005		01/22/0
X0127	XG.2001.80-3	127-18-4	Tetrachloroethene	ND	mg / Kg	1	0.005		01/22
X0127	XG.2001.80-3	108-88-3	Toluene	ND	mg / Kg	1	0.005		01/22/
X0127	XG.2001.80-3	79-01-6	Trichloroethene	ND	mg / Kg	1	0.005		01/22/0
X0127	XG.2001.80-3	75-69-4	Trichlorofluoromethane	ND	mg / Kg	1	0.025		01/22/0
X0127	XG.2001.80-3	108-05-4	Vinyl acetate	ND	mg / Kg	1	0.025		01/22/0
X0127	XG.2001.80-3	75-01-4	Vinyl chloride	ND	mg / Kg	1	0.025		01/22/0

X0127-016 **SW846 8260A Purgeable VOCs by GC/MS**

X0127	XG.2001.117-1	75-34-3	1,1 Dichloroethane	ND	mg / Kg	1	0.005		01/25/0
X0127	XG.2001.117-1	75-34-3	1,1 Dichloroethene	ND	mg / Kg	1	0.005		01/25/0
X0127	XG.2001.117-1	71-55-6	1,1,1 Trichloroethane	ND	mg / Kg	1	0.005		01/25/0
X0127	XG.2001.117-1	630-20-6	1,1,1,2 Tetrachloroethane	ND	mg / Kg	1	0.005		01/25/0
X0127	XG.2001.117-1	79-00-5	1,1,2 Trichloroethane	ND	mg / Kg	1	0.005		01/25/0
X0127	XG.2001.117-1	79-34-5	1,1,2,2 Tetrachloroethane	ND	mg / Kg	1	0.005		01/25/0
X0127	XG.2001.117-1	106-93-4	1,2 Dibromoethane (EDB)	ND	mg / Kg	1	0.005		01/25/0
X0127	XG.2001.117-1	95-50-1	1,2 Dichlorobenzene	ND	mg / Kg	1	0.005		01/25/0
X0127	XG.2001.117-1	107-06-2	1,2 Dichloroethane	ND	mg / Kg	1	0.005		01/25/0
X0127	XG.2001.117-1	78-87-5	1,2 Dichloropropane	ND	mg / Kg	1	0.005		01/25/0
X0127	XG.2001.117-1	96-18-4	1,2,3 Trichloropropane	ND	mg / Kg	1	0.005		01/25/0
X0127	XG.2001.117-1	95-63-6	1,2,4-Trimethylbenzene	ND	mg / Kg	1	0.005		01/25/0
X0127	XG.2001.117-1	541-73-1	1,3 Dichlorobenzene	ND	mg / Kg	1	0.005		01/25/0
X0127	XG.2001.117-1	108-67-8	1,3,5-Trimethylbenzene	ND	mg / Kg	1	0.005		01/25/0
X0127	XG.2001.117-1	764-41-0	1,4 Dichloro-2-butene	ND	mg / Kg	1	0.05		01/25/0
X0127	XG.2001.117-1	106-46-7	1,4 Dichlorobenzene	ND	mg / Kg	1	0.005		01/25/0
X0127	XG.2001.117-1	78-93-3	2-Butanone (MEK)	ND	mg / Kg	1	0.025		01/25/0
X0127	XG.2001.117-1	110-75-8	2-Chloroethylvinylether	ND	mg / Kg	1	0.025		01/25/0
X0127	XG.2001.117-1	591-78-6	2-Hexanone (MBK)	ND	mg / Kg	1	0.025		01/25

Quality Control Summary

Client: **CH2MHILL**

Project: **0102072** **160660.02.FF.SA**

Explanation of codes

D	*Not applicable due to sample dilution*
L	*Not applicable due to MDL proximity*

X0127	XG.2001.117-1	108-10-1	4-Methyl-2-pentanone (MIBK)	ND	mg / Kg	1	0.025		01/25/01
X0127	XG.2001.117-1	67-64-1	Acetone	ND	mg / Kg	1	0.05		01/25/01
X0127	XG.2001.117-1	107-02-8	Acrolein	ND	mg / Kg	1	0.1		01/25/01
X0127	XG.2001.117-1	107-13-1	Acrylonitrile	ND	mg / Kg	1	0.1		01/25/01
X0127	XG.2001.117-1	71-43-2	Benzene	ND	mg / Kg	1	0.005		01/25/01
X0127	XG.2001.117-1	75-27-4	Bromodichloromethane	ND	mg / Kg	1	0.005		01/25/01
X0127	XG.2001.117-1	75-25-2	Bromoform	ND	mg / Kg	1	0.005		01/25/01
X0127	XG.2001.117-1	74-83-9	Bromomethane	ND	mg / Kg	1	0.025		01/25/01
X0127	XG.2001.117-1	75-15-0	Carbon disulfide	ND	mg / Kg	1	0.025		01/25/01
X0127	XG.2001.117-1	56-23-5	Carbon tetrachloride	ND	mg / Kg	1	0.005		01/25/01
X0127	XG.2001.117-1	108-90-7	Chlorobenzene	ND	mg / Kg	1	0.005		01/25/01
X0127	XG.2001.117-1	124-48-1	Chlorodibromomethane	ND	mg / Kg	1	0.005		01/25/01
X0127	XG.2001.117-1	75-00-3	Chloroethane	ND	mg / Kg	1	0.025		01/25/01
X0127	XG.2001.117-1	67-66-3	Chloroform	ND	mg / Kg	1	0.005		01/25/01
X0127	XG.2001.117-1	74-87-3	Chloromethane	ND	mg / Kg	1	0.025		01/25/01
X0127	XG.2001.117-1	156-59-2	cis-1,2 dichloroethene	ND	mg / Kg	1	0.005		01/25/01
X0127	XG.2001.117-1	10061-01-5	cis-1,3 dichloropropene	ND	mg / Kg	1	0.005		01/25/01
X0127	XG.2001.117-1	74-95-3	Dibromomethane	ND	mg / Kg	1	0.005		01/25/01
X0127	XG.2001.117-1	97-63-2	Ethyl methacrylate	ND	mg / Kg	1	0.025		01/25/01
X0127	XG.2001.117-1	100-41-4	Ethylbenzene	ND	mg / Kg	1	0.005		01/25/01
X0127	XG.2001.117-1		Freon 113	ND	mg / Kg	1	0.025		01/25/01
X0127	XG.2001.117-1	75-71-8	Freon 12	ND	mg / Kg	1	0.05		01/25/01
X0127	XG.2001.117-1	74-88-4	Iodomethane	ND	mg / Kg	1	0.025		01/25/01
	XG.2001.117-1	1634-04-4	Methyl t-butyl ether (MTBE)	ND	mg / Kg	1	0.005		01/25/01
	XG.2001.117-1	75-09-2	Methylene chloride	ND	mg / Kg	1	0.05		01/25/01
X0127	XG.2001.117-1	91-20-3	Naphthalene	ND	mg / Kg	1	0.025		01/25/01
X0127	XG.2001.117-1	95-47-6	o-Xylene	ND	mg / Kg	1	0.005		01/25/01
X0127	XG.2001.117-1	108-38-3/106-42	p/m Xylenes	ND	mg / Kg	1	0.01		01/25/01
X0127	XG.2001.117-1	100-42-5	Styrene	ND	mg / Kg	1	0.005		01/25/01
X0127	XG.2001.117-1	156-60-5	t-1,2 Dichloroethene	ND	mg / Kg	1	0.005		01/25/01
X0127	XG.2001.117-1	10061-02-6	t-1,3 Dichloropropene	ND	mg / Kg	1	0.005		01/25/01
X0127	XG.2001.117-1	127-18-4	Tetrachloroethene	ND	mg / Kg	1	0.005		01/25/01
X0127	XG.2001.117-1	108-88-3	Toluene	ND	mg / Kg	1	0.005		01/25/01
X0127	XG.2001.117-1	79-01-6	Trichloroethene	ND	mg / Kg	1	0.005		01/25/01
X0127	XG.2001.117-1	75-69-4	Trichlorofluoromethane	ND	mg / Kg	1	0.025		01/25/01
X0127	XG.2001.117-1	108-05-4	Vinyl acetate	ND	mg / Kg	1	0.025		01/25/01
X0127	XG.2001.117-1	75-01-4	Vinyl chloride	ND	mg / Kg	1	0.025		01/25/01

X0127-019 **SW846 8260A Purgeable VOCs by GC/MS**

X0127	XG.2001.124-1	75-34-3	1,1 Dichloroethane	ND	mg / Kg	1	0.005		01/29/01
X0127	XG.2001.124-1	75-34-3	1,1 Dichloroethene	ND	mg / Kg	1	0.005		01/29/01
X0127	XG.2001.124-1	71-55-6	1,1,1 Trichloroethane	ND	mg / Kg	1	0.005		01/29/01
X0127	XG.2001.124-1	630-20-6	1,1,1,2 Tetrachloroethane	ND	mg / Kg	1	0.005		01/29/01
X0127	XG.2001.124-1	79-00-5	1,1,2 Trichloroethane	ND	mg / Kg	1	0.005		01/29/01
X0127	XG.2001.124-1	79-34-5	1,1,2,2 Tetrachloroethane	ND	mg / Kg	1	0.005		01/29/01
X0127	XG.2001.124-1	106-93-4	1,2 Dibromoethane (EDB)	ND	mg / Kg	1	0.005		01/29/01
X0127	XG.2001.124-1	95-50-1	1,2 Dichlorobenzene	ND	mg / Kg	1	0.005		01/29/01
X0127	XG.2001.124-1	107-06-2	1,2 Dichloroethane	ND	mg / Kg	1	0.005		01/29/01
X0127	XG.2001.124-1	78-87-5	1,2 Dichloropropane	ND	mg / Kg	1	0.005		01/29/01
	XG.2001.124-1	96-18-4	1,2,3 Trichloropropane	ND	mg / Kg	1	0.005		01/29/01

Quality Control Summary

Client: **CH2MHILL**

Project: **0102072** **160660.02.FF.SA**

Explanation of codes	
D	*Not applicable due to sample dilut*
L	*Not applicable due to MDL proxim*

X0127	XG.2001.124-1	95-63-6	1,2,4-Trimethylbenzene	ND	mg / Kg	1	0.005	01/29/0
X0127	XG.2001.124-1	541-73-1	1,3 Dichlorobenzene	ND	mg / Kg	1	0.005	01/29/0
X0127	XG.2001.124-1	108-67-8	1,3,5-Trimethylbenzene	ND	mg / Kg	1	0.005	01/29/0
X0127	XG.2001.124-1	764-41-0	1,4 Dichloro-2-butene	ND	mg / Kg	1	0.05	01/29/0
X0127	XG.2001.124-1	106-46-7	1,4 Dichlorobenzene	ND	mg / Kg	1	0.005	01/29/0
X0127	XG.2001.124-1	78-93-3	2-Butanone (MEK)	ND	mg / Kg	1	0.025	01/29/0
X0127	XG.2001.124-1	110-75-8	2-Chloroethylvinylether	ND	mg / Kg	1	0.025	01/29/0
X0127	XG.2001.124-1	591-78-6	2-Hexanone (MBK)	ND	mg / Kg	1	0.025	01/29/0
X0127	XG.2001.124-1	108-10-1	4-Methyl-2-pentanone (MIBK)	ND	mg / Kg	1	0.025	01/29/0
X0127	XG.2001.124-1	67-64-1	Acetone	ND	mg / Kg	1	0.05	01/29/0
X0127	XG.2001.124-1	107-02-8	Acrolein	ND	mg / Kg	1	0.1	01/29/0
X0127	XG.2001.124-1	107-13-1	Acrylonitrile	ND	mg / Kg	1	0.1	01/29/0
X0127	XG.2001.124-1	71-43-2	Benzene	ND	mg / Kg	1	0.005	01/29/0
X0127	XG.2001.124-1	75-27-4	Bromodichloromethane	ND	mg / Kg	1	0.005	01/29/0
X0127	XG.2001.124-1	75-25-2	Bromoform	ND	mg / Kg	1	0.005	01/29/0
X0127	XG.2001.124-1	74-83-9	Bromomethane	ND	mg / Kg	1	0.025	01/29/0
X0127	XG.2001.124-1	75-15-0	Carbon disulfide	ND	mg / Kg	1	0.025	01/29/0
X0127	XG.2001.124-1	56-23-5	Carbon tetrachloride	ND	mg / Kg	1	0.005	01/29/0
X0127	XG.2001.124-1	108-90-7	Chlorobenzene	ND	mg / Kg	1	0.005	01/29/0
X0127	XG.2001.124-1	124-48-1	Chlorodibromomethane	ND	mg / Kg	1	0.005	01/29/0
X0127	XG.2001.124-1	75-00-3	Chloroethane	ND	mg / Kg	1	0.025	01/29/0
X0127	XG.2001.124-1	67-66-3	Chloroform	ND	mg / Kg	1	0.005	01/29/0
X0127	XG.2001.124-1	74-87-3	Chloromethane	ND	mg / Kg	1	0.025	01/29/0
X0127	XG.2001.124-1	156-59-2	cis-1,2 dichloroethene	ND	mg / Kg	1	0.005	01/29
X0127	XG.2001.124-1	10061-01-5	cis-1,3 dichloropropene	ND	mg / Kg	1	0.005	01/2
X0127	XG.2001.124-1	74-95-3	Dibromomethane	ND	mg / Kg	1	0.005	01/29/01
X0127	XG.2001.124-1	97-63-2	Ethyl methacrylate	ND	mg / Kg	1	0.025	01/29/01
X0127	XG.2001.124-1	100-41-4	Ethylbenzene	ND	mg / Kg	1	0.005	01/29/01
X0127	XG.2001.124-1		Freon 113	ND	mg / Kg	1	0.025	01/29/01
X0127	XG.2001.124-1	75-71-8	Freon 12	ND	mg / Kg	1	0.05	01/29/01
X0127	XG.2001.124-1	74-88-4	Iodomethane	ND	mg / Kg	1	0.025	01/29/01
X0127	XG.2001.124-1	1634-04-4	Methyl t-butyl ether (MTBE)	ND	mg / Kg	1	0.005	01/29/01
X0127	XG.2001.124-1	75-09-2	Methylene chloride	ND	mg / Kg	1	0.05	01/29/01
X0127	XG.2001.124-1	91-20-3	Naphthalene	ND	mg / Kg	1	0.025	01/29/01
X0127	XG.2001.124-1	95-47-6	o-Xylene	ND	mg / Kg	1	0.005	01/29/01
X0127	XG.2001.124-1	108-38-3/106-42	p/m Xylenes	ND	mg / Kg	1	0.01	01/29/01
X0127	XG.2001.124-1	100-42-5	Styrene	ND	mg / Kg	1	0.005	01/29/01
X0127	XG.2001.124-1	156-60-5	t-1,2 Dichloroethene	ND	mg / Kg	1	0.005	01/29/01
X0127	XG.2001.124-1	10061-02-6	t-1,3 Dichloropropene	ND	mg / Kg	1	0.005	01/29/01
X0127	XG.2001.124-1	127-18-4	Tetrachloroethene	ND	mg / Kg	1	0.005	01/29/01
X0127	XG.2001.124-1	108-88-3	Toluene	ND	mg / Kg	1	0.005	01/29/01
X0127	XG.2001.124-1	79-01-6	Trichloroethene	ND	mg / Kg	1	0.005	01/29/01
X0127	XG.2001.124-1	75-69-4	Trichlorofluoromethane	ND	mg / Kg	1	0.025	01/29/01
X0127	XG.2001.124-1	108-05-4	Vinyl acetate	ND	mg / Kg	1	0.025	01/29/01
X0127	XG.2001.124-1	75-01-4	Vinyl chloride	ND	mg / Kg	1	0.025	01/29/01
X0127-021		**SW846 8260A Purgeable VOCs by GC/MS**						
X0127	XG.2001.132-1	75-34-3	1,1 Dichloroethane	ND	mg / Kg	1	0.005	01/30/01
X0127	XG.2001.132-1	75-34-3	1,1 Dichloroethene	ND	mg / Kg	1	0.005	01/30/01
X0127	XG.2001.132-1	71-55-6	1,1,1 Trichloroethane	ND	mg / Kg	1	0.005	01/30

Quality Control Summary

Client: **CH2MHILL**

Project: **0102072** **160660.02.FF.SA**

Explanation of codes

D	*Not applicable due to sample dilution*
L	*Not applicable due to MDL proximity*

X0127	XG.2001.132-1	630-20-6	1,1,1,2 Tetrachloroethane	ND	mg / Kg	1	0.005		01/30/01
X0127	XG.2001.132-1	79-00-5	1,1,2 Trichloroethane	ND	mg / Kg	1	0.005		01/30/01
X0127	XG.2001.132-1	79-34-5	1,1,2,2 Tetrachloroethane	ND	mg / Kg	1	0.005		01/30/01
X0127	XG.2001.132-1	106-93-4	1,2 Dibromoethane (EDB)	ND	mg / Kg	1	0.005		01/30/01
X0127	XG.2001.132-1	95-50-1	1,2 Dichlorobenzene	ND	mg / Kg	1	0.005		01/30/01
X0127	XG.2001.132-1	107-06-2	1,2 Dichloroethane	ND	mg / Kg	1	0.005		01/30/01
X0127	XG.2001.132-1	78-87-5	1,2 Dichloropropane	ND	mg / Kg	1	0.005		01/30/01
X0127	XG.2001.132-1	96-18-4	1,2,3 Trichloropropane	ND	mg / Kg	1	0.005		01/30/01
X0127	XG.2001.132-1	95-63-6	1,2,4-Trimethylbenzene	ND	mg / Kg	1	0.005		01/30/01
X0127	XG.2001.132-1	541-73-1	1,3 Dichlorobenzene	ND	mg / Kg	1	0.005		01/30/01
X0127	XG.2001.132-1	108-67-8	1,3,5-Trimethylbenzene	ND	mg / Kg	1	0.005		01/30/01
X0127	XG.2001.132-1	764-41-0	1,4 Dichloro-2-butene	ND	mg / Kg	1	0.05		01/30/01
X0127	XG.2001.132-1	106-46-7	1,4 Dichlorobenzene	ND	mg / Kg	1	0.005		01/30/01
X0127	XG.2001.132-1	78-93-3	2-Butanone (MEK)	ND	mg / Kg	1	0.025		01/30/01
X0127	XG.2001.132-1	110-75-8	2-Chloroethylvinylether	ND	mg / Kg	1	0.025		01/30/01
X0127	XG.2001.132-1	591-78-6	2-Hexanone (MBK)	ND	mg / Kg	1	0.025		01/30/01
X0127	XG.2001.132-1	108-10-1	4-Methyl-2-pentanone (MIBK)	ND	mg / Kg	1	0.025		01/30/01
X0127	XG.2001.132-1	67-64-1	Acetone	ND	mg / Kg	1	0.05		01/30/01
X0127	XG.2001.132-1	107-02-8	Acrolein	ND	mg / Kg	1	0.1		01/30/01
X0127	XG.2001.132-1	107-13-1	Acrylonitrile	ND	mg / Kg	1	0.1		01/30/01
X0127	XG.2001.132-1	71-43-2	Benzene	ND	mg / Kg	1	0.005		01/30/01
X0127	XG.2001.132-1	75-27-4	Bromodichloromethane	ND	mg / Kg	1	0.005		01/30/01
X0127	XG.2001.132-1	75-25-2	Bromoform	ND	mg / Kg	1	0.005		01/30/01
[illegible]	XG.2001.132-1	74-83-9	Bromomethane	ND	mg / Kg	1	0.025		01/30/01
[illegible]	XG.2001.132-1	75-15-0	Carbon disulfide	ND	mg / Kg	1	0.025		01/30/01
X0127	XG.2001.132-1	56-23-5	Carbon tetrachloride	ND	mg / Kg	1	0.005		01/30/01
X0127	XG.2001.132-1	108-90-7	Chlorobenzene	ND	mg / Kg	1	0.005		01/30/01
X0127	XG.2001.132-1	124-48-1	Chlorodibromomethane	ND	mg / Kg	1	0.005		01/30/01
X0127	XG.2001.132-1	75-00-3	Chloroethane	ND	mg / Kg	1	0.025		01/30/01
X0127	XG.2001.132-1	67-66-3	Chloroform	ND	mg / Kg	1	0.005		01/30/01
X0127	XG.2001.132-1	74-87-3	Chloromethane	ND	mg / Kg	1	0.025		01/30/01
X0127	XG.2001.132-1	156-59-2	cis-1,2 dichloroethene	ND	mg / Kg	1	0.005		01/30/01
X0127	XG.2001.132-1	10061-01-5	cis-1,3 dichloropropene	ND	mg / Kg	1	0.005		01/30/01
X0127	XG.2001.132-1	74-95-3	Dibromomethane	ND	mg / Kg	1	0.005		01/30/01
X0127	XG.2001.132-1	97-63-2	Ethyl methacrylate	ND	mg / Kg	1	0.025		01/30/01
X0127	XG.2001.132-1	100-41-4	Ethylbenzene	ND	mg / Kg	1	0.005		01/30/01
X0127	XG.2001.132-1		Freon 113	ND	mg / Kg	1	0.025		01/30/01
X0127	XG.2001.132-1	75-71-8	Freon 12	ND	mg / Kg	1	0.05		01/30/01
X0127	XG.2001.132-1	74-88-4	Iodomethane	ND	mg / Kg	1	0.025		01/30/01
X0127	XG.2001.132-1	1634-04-4	Methyl t-butyl ether (MTBE)	ND	mg / Kg	1	0.005		01/30/01
X0127	XG.2001.132-1	75-09-2	Methylene chloride	ND	mg / Kg	1	0.05		01/30/01
X0127	XG.2001.132-1	91-20-3	Naphthalene	ND	mg / Kg	1	0.025		01/30/01
X0127	XG.2001.132-1	95-47-6	o-Xylene	ND	mg / Kg	1	0.005		01/30/01
X0127	XG.2001.132-1	108-38-3/106-42	p/m Xylenes	ND	mg / Kg	1	0.01		01/30/01
X0127	XG.2001.132-1	100-42-5	Styrene	ND	mg / Kg	1	0.005		01/30/01
X0127	XG.2001.132-1	156-60-5	t-1,2 Dichloroethene	ND	mg / Kg	1	0.005		01/30/01
X0127	XG.2001.132-1	10061-02-6	t-1,3 Dichloropropene	ND	mg / Kg	1	0.005		01/30/01
X0127	XG.2001.132-1	127-18-4	Tetrachloroethene	ND	mg / Kg	1	0.005		01/30/01
X0127	XG.2001.132-1	108-88-3	Toluene	ND	mg / Kg	1	0.005		01/30/01
[illegible]	XG.2001.132-1	79-01-6	Trichloroethene	ND	mg / Kg	1	0.005		01/30/01

Quality Control Summary

Client: **CH2MHILL**

Project: **0102072** **160660.02.FF.SA**

Explanation of codes	
D	*Not applicable due to sample dilut*
L	*Not applicable due to MDL proxin*

X0127	XG.2001.132-1	75-69-4	Trichlorofluoromethane	ND	mg / Kg	1	0.025		01/30/01
X0127	XG.2001.132-1	108-05-4	Vinyl acetate	ND	mg / Kg	1	0.025		01/30/01
X0127	XG.2001.132-1	75-01-4	Vinyl chloride	ND	mg / Kg	1	0.025		01/30/01
X0127-024		**SW846 8260A Purgeable VOCs by GC/MS**							
X0127	XG.2001.157-2	75-34-3	1,1 Dichloroethane	ND	mg / Kg	1	0.005		02/01/01
X0127	XG.2001.157-2	75-34-3	1,1 Dichloroethene	ND	mg / Kg	1	0.005		02/01/01
X0127	XG.2001.157-2	71-55-6	1,1,1 Trichloroethane	ND	mg / Kg	1	0.005		02/01/01
X0127	XG.2001.157-2	630-20-6	1,1,1,2 Tetrachloroethane	ND	mg / Kg	1	0.005		02/01/01
X0127	XG.2001.157-2	79-00-5	1,1,2 Trichloroethane	ND	mg / Kg	1	0.005		02/01/01
X0127	XG.2001.157-2	79-34-5	1,1,2,2 Tetrachloroethane	ND	mg / Kg	1	0.005		02/01/01
X0127	XG.2001.157-2	106-93-4	1,2 Dibromoethane (EDB)	ND	mg / Kg	1	0.005		02/01/01
X0127	XG.2001.157-2	95-50-1	1,2 Dichlorobenzene	ND	mg / Kg	1	0.005		02/01/01
X0127	XG.2001.157-2	107-06-2	1,2 Dichloroethane	ND	mg / Kg	1	0.005		02/01/01
X0127	XG.2001.157-2	78-87-5	1,2 Dichloropropane	ND	mg / Kg	1	0.005		02/01/01
X0127	XG.2001.157-2	96-18-4	1,2,3 Trichloropropane	ND	mg / Kg	1	0.005		02/01/01
X0127	XG.2001.157-2	95-63-6	1,2,4-Trimethylbenzene	ND	mg / Kg	1	0.005		02/01/01
X0127	XG.2001.157-2	541-73-1	1,3 Dichlorobenzene	ND	mg / Kg	1	0.005		02/01/01
X0127	XG.2001.157-2	108-67-8	1,3,5-Trimethylbenzene	ND	mg / Kg	1	0.005		02/01/01
X0127	XG.2001.157-2	764-41-0	1,4 Dichloro-2-butene	ND	mg / Kg	1	0.05		02/01/01
X0127	XG.2001.157-2	106-46-7	1,4 Dichlorobenzene	ND	mg / Kg	1	0.005		02/01/01
X0127	XG.2001.157-2	78-93-3	2-Butanone (MEK)	ND	mg / Kg	1	0.025		02/01/01
X0127	XG.2001.157-2	110-75-8	2-Chloroethylvinylether	ND	mg / Kg	1	0.025		02/01/01
X0127	XG.2001.157-2	591-78-6	2-Hexanone (MBK)	ND	mg / Kg	1	0.025		02/01/01
X0127	XG.2001.157-2	108-10-1	4-Methyl-2-pentanone (MIBK)	ND	mg / Kg	1	0.025		02/0
X0127	XG.2001.157-2	67-64-1	Acetone	ND	mg / Kg	1	0.05		02/01
X0127	XG.2001.157-2	107-02-8	Acrolein	ND	mg / Kg	1	0.1		02/01/01
X0127	XG.2001.157-2	107-13-1	Acrylonitrile	ND	mg / Kg	1	0.1		02/01/01
X0127	XG.2001.157-2	71-43-2	Benzene	ND	mg / Kg	1	0.005		02/01/01
X0127	XG.2001.157-2	75-27-4	Bromodichloromethane	ND	mg / Kg	1	0.005		02/01/01
X0127	XG.2001.157-2	75-25-2	Bromoform	ND	mg / Kg	1	0.005		02/01/01
X0127	XG.2001.157-2	74-83-9	Bromomethane	ND	mg / Kg	1	0.025		02/01/01
X0127	XG.2001.157-2	75-15-0	Carbon disulfide	ND	mg / Kg	1	0.025		02/01/01
X0127	XG.2001.157-2	56-23-5	Carbon tetrachloride	ND	mg / Kg	1	0.005		02/01/01
X0127	XG.2001.157-2	108-90-7	Chlorobenzene	ND	mg / Kg	1	0.005		02/01/01
X0127	XG.2001.157-2	124-48-1	Chlorodibromomethane	ND	mg / Kg	1	0.005		02/01/01
X0127	XG.2001.157-2	75-00-3	Chloroethane	ND	mg / Kg	1	0.025		02/01/01
X0127	XG.2001.157-2	67-66-3	Chloroform	ND	mg / Kg	1	0.005		02/01/01
X0127	XG.2001.157-2	74-87-3	Chloromethane	ND	mg / Kg	1	0.025		02/01/01
X0127	XG.2001.157-2	156-59-2	cis-1,2 dichloroethene	ND	mg / Kg	1	0.005		02/01/01
X0127	XG.2001.157-2	10061-01-5	cis-1,3 dichloropropene	ND	mg / Kg	1	0.005		02/01/01
X0127	XG.2001.157-2	74-95-3	Dibromomethane	ND	mg / Kg	1	0.005		02/01/01
X0127	XG.2001.157-2	97-63-2	Ethyl methacrylate	ND	mg / Kg	1	0.025		02/01/01
X0127	XG.2001.157-2	100-41-4	Ethylbenzene	ND	mg / Kg	1	0.005		02/01/01
X0127	XG.2001.157-2		Freon 113	ND	mg / Kg	1	0.025		02/01/01
X0127	XG.2001.157-2	75-71-8	Freon 12	ND	mg / Kg	1	0.05		02/01/01
X0127	XG.2001.157-2	74-88-4	Iodomethane	ND	mg / Kg	1	0.025		02/01/01
X0127	XG.2001.157-2	1634-04-4	Methyl t-butyl ether (MTBE)	ND	mg / Kg	1	0.005		02/01/01
X0127	XG.2001.157-2	75-09-2	Methylene chloride	ND	mg / Kg	1	0.05		02/01/01
X0127	XG.2001.157-2	91-20-3	Naphthalene	ND	mg / Kg	1	0.025		02/01/01
X0127	XG.2001.157-2	95-47-6	o-Xylene	ND	mg / Kg	1	0.005		02/0

Quality Control Summary

Client: **CH2MHILL**

Project: **0102072** **160660.02.FF.SA**

Explanation of codes

D	*Not applicable due to sample dilution*
L	*Not applicable due to MDL proximity*

X0127	XG.2001.157-2	108-38-3/106-42	p/m Xylenes	ND	mg / Kg	1	0.01		02/01/01
X0127	XG.2001.157-2	100-42-5	Styrene	ND	mg / Kg	1	0.005		02/01/01
X0127	XG.2001.157-2	156-60-5	t-1,2 Dichloroethene	ND	mg / Kg	1	0.005		02/01/01
X0127	XG.2001.157-2	10061-02-6	t-1,3 Dichloropropene	ND	mg / Kg	1	0.005		02/01/01
X0127	XG.2001.157-2	127-18-4	Tetrachloroethene	ND	mg / Kg	1	0.005		02/01/01
X0127	XG.2001.157-2	108-88-3	Toluene	ND	mg / Kg	1	0.005		02/01/01
X0127	XG.2001.157-2	79-01-6	Trichloroethene	ND	mg / Kg	1	0.005		02/01/01
X0127	XG.2001.157-2	75-69-4	Trichlorofluoromethane	ND	mg / Kg	1	0.025		02/01/01
X0127	XG.2001.157-2	108-05-4	Vinyl acetate	ND	mg / Kg	1	0.025		02/01/01
X0127	XG.2001.157-2	75-01-4	Vinyl chloride	ND	mg / Kg	1	0.025		02/01/01
X0127-028		**SW846 8260A Purgeable VOCs by GC/MS**							
X0127	XG.2001.157-5	75-34-3	1,1 Dichloroethane	ND	mg / Kg	1	0.005		02/02/01
X0127	XG.2001.157-5	75-34-3	1,1 Dichloroethene	ND	mg / Kg	1	0.005		02/02/01
X0127	XG.2001.157-5	71-55-6	1,1,1 Trichloroethane	ND	mg / Kg	1	0.005		02/02/01
X0127	XG.2001.157-5	630-20-6	1,1,1,2 Tetrachloroethane	ND	mg / Kg	1	0.005		02/02/01
X0127	XG.2001.157-5	79-00-5	1,1,2 Trichloroethane	ND	mg / Kg	1	0.005		02/02/01
X0127	XG.2001.157-5	79-34-5	1,1,2,2 Tetrachloroethane	ND	mg / Kg	1	0.005		02/02/01
X0127	XG.2001.157-5	106-93-4	1,2 Dibromoethane (EDB)	ND	mg / Kg	1	0.005		02/02/01
X0127	XG.2001.157-5	95-50-1	1,2 Dichlorobenzene	ND	mg / Kg	1	0.005		02/02/01
X0127	XG.2001.157-5	107-06-2	1,2 Dichloroethane	ND	mg / Kg	1	0.005		02/02/01
X0127	XG.2001.157-5	78-87-5	1,2 Dichloropropane	ND	mg / Kg	1	0.005		02/02/01
X0127	XG.2001.157-5	96-18-4	1,2,3 Trichloropropane	ND	mg / Kg	1	0.005		02/02/01
[illegible]	XG.2001.157-5	95-63-6	1,2,4-Trimethylbenzene	ND	mg / Kg	1	0.005		02/02/01
[illegible]	XG.2001.157-5	541-73-1	1,3 Dichlorobenzene	ND	mg / Kg	1	0.005		02/02/01
X0127	XG.2001.157-5	108-67-8	1,3,5-Trimethylbenzene	ND	mg / Kg	1	0.005		02/02/01
X0127	XG.2001.157-5	764-41-0	1,4 Dichloro-2-butene	ND	mg / Kg	1	0.05		02/02/01
X0127	XG.2001.157-5	106-46-7	1,4 Dichlorobenzene	ND	mg / Kg	1	0.005		02/02/01
X0127	XG.2001.157-5	78-93-3	2-Butanone (MEK)	ND	mg / Kg	1	0.025		02/02/01
X0127	XG.2001.157-5	110-75-8	2-Chloroethylvinylether	ND	mg / Kg	1	0.025		02/02/01
X0127	XG.2001.157-5	591-78-6	2-Hexanone (MBK)	ND	mg / Kg	1	0.025		02/02/01
X0127	XG.2001.157-5	108-10-1	4-Methyl-2-pentanone (MIBK)	ND	mg / Kg	1	0.025		02/02/01
X0127	XG.2001.157-5	67-64-1	Acetone	ND	mg / Kg	1	0.05		02/02/01
X0127	XG.2001.157-5	107-02-8	Acrolein	ND	mg / Kg	1	0.1		02/02/01
X0127	XG.2001.157-5	107-13-1	Acrylonitrile	ND	mg / Kg	1	0.1		02/02/01
X0127	XG.2001.157-5	71-43-2	Benzene	ND	mg / Kg	1	0.005		02/02/01
X0127	XG.2001.157-5	75-27-4	Bromodichloromethane	ND	mg / Kg	1	0.005		02/02/01
X0127	XG.2001.157-5	75-25-2	Bromoform	ND	mg / Kg	1	0.005		02/02/01
X0127	XG.2001.157-5	74-83-9	Bromomethane	ND	mg / Kg	1	0.025		02/02/01
X0127	XG.2001.157-5	75-15-0	Carbon disulfide	ND	mg / Kg	1	0.025		02/02/01
X0127	XG.2001.157-5	56-23-5	Carbon tetrachloride	ND	mg / Kg	1	0.005		02/02/01
X0127	XG.2001.157-5	108-90-7	Chlorobenzene	ND	mg / Kg	1	0.005		02/02/01
X0127	XG.2001.157-5	124-48-1	Chlorodibromomethane	ND	mg / Kg	1	0.005		02/02/01
X0127	XG.2001.157-5	75-00-3	Chloroethane	ND	mg / Kg	1	0.025		02/02/01
X0127	XG.2001.157-5	67-66-3	Chloroform	ND	mg / Kg	1	0.005		02/02/01
X0127	XG.2001.157-5	74-87-3	Chloromethane	ND	mg / Kg	1	0.025		02/02/01
X0127	XG.2001.157-5	156-59-2	cis-1,2 dichloroethene	ND	mg / Kg	1	0.005		02/02/01
X0127	XG.2001.157-5	10061-01-5	cis-1,3 dichloropropene	ND	mg / Kg	1	0.005		02/02/01
X0127	XG.2001.157-5	74-95-3	Dibromomethane	ND	mg / Kg	1	0.005		02/02/01
[illegible]	XG.2001.157-5	97-63-2	Ethyl methacrylate	ND	mg / Kg	1	0.025		02/02/01

Quality Control Summary

Client: **CH2MHILL**

Project: **0102072** **160660.02.FF.SA**

Explanation of codes	
D	*Not applicable due to sample dilut*
L	*Not applicable due to MDL proxim*

X0127	XG.2001.157-5	100-41-4	Ethylbenzene	ND	mg / Kg	1	0.005		02/02/0
X0127	XG.2001.157-5		Freon 113	ND	mg / Kg	1	0.025		02/02/0
X0127	XG.2001.157-5	75-71-8	Freon 12	ND	mg / Kg	1	0.05		02/02/0
X0127	XG.2001.157-5	74-88-4	Iodomethane	ND	mg / Kg	1	0.025		02/02/0
X0127	XG.2001.157-5	1634-04-4	Methyl t-butyl ether (MTBE)	ND	mg / Kg	1	0.005		02/02/0
X0127	XG.2001.157-5	75-09-2	Methylene chloride	ND	mg / Kg	1	0.05		02/02/0
X0127	XG.2001.157-5	91-20-3	Naphthalene	ND	mg / Kg	1	0.025		02/02/0
X0127	XG.2001.157-5	95-47-6	o-Xylene	ND	mg / Kg	1	0.005		02/02/0
X0127	XG.2001.157-5	108-38-3/106-42	p/m Xylenes	ND	mg / Kg	1	0.01		02/02/0
X0127	XG.2001.157-5	100-42-5	Styrene	ND	mg / Kg	1	0.005		02/02/0
X0127	XG.2001.157-5	156-60-5	t-1,2 Dichloroethene	ND	mg / Kg	1	0.005		02/02/0
X0127	XG.2001.157-5	10061-02-6	t-1,3 Dichloropropene	ND	mg / Kg	1	0.005		02/02/0
X0127	XG.2001.157-5	127-18-4	Tetrachloroethene	ND	mg / Kg	1	0.005		02/02/0
X0127	XG.2001.157-5	108-88-3	Toluene	ND	mg / Kg	1	0.005		02/02/0
X0127	XG.2001.157-5	79-01-6	Trichloroethene	ND	mg / Kg	1	0.005		02/02/0
X0127	XG.2001.157-5	75-69-4	Trichlorofluoromethane	ND	mg / Kg	1	0.025		02/02/0
X0127	XG.2001.157-5	108-05-4	Vinyl acetate	ND	mg / Kg	1	0.025		02/02/0
X0127	XG.2001.157-5	75-01-4	Vinyl chloride	ND	mg / Kg	1	0.025		02/02/0

X0127-030 **SW846 8260A Purgeable VOCs by GC/MS**

X0127	XG.2001.198-1	75-34-3	1,1 Dichloroethane	ND	mg / Kg	1	0.005		02/09/0
X0127	XG.2001.198-1	75-34-3	1,1 Dichloroethene	ND	mg / Kg	1	0.005		02/09/0
X0127	XG.2001.198-1	71-55-6	1,1,1 Trichloroethane	ND	mg / Kg	1	0.005		02/09/0
X0127	XG.2001.198-1	630-20-6	1,1,1,2 Tetrachloroethane	ND	mg / Kg	1	0.005		02/09
X0127	XG.2001.198-1	79-00-5	1,1,2 Trichloroethane	ND	mg / Kg	1	0.005		02/09
X0127	XG.2001.198-1	79-34-5	1,1,2,2 Tetrachloroethane	ND	mg / Kg	1	0.005		02/09/0
X0127	XG.2001.198-1	106-93-4	1,2 Dibromoethane (EDB)	ND	mg / Kg	1	0.005		02/09/0
X0127	XG.2001.198-1	95-50-1	1,2 Dichlorobenzene	ND	mg / Kg	1	0.005		02/09/0
X0127	XG.2001.198-1	107-06-2	1,2 Dichloroethane	ND	mg / Kg	1	0.005		02/09/0
X0127	XG.2001.198-1	78-87-5	1,2 Dichloropropane	ND	mg / Kg	1	0.005		02/09/0
X0127	XG.2001.198-1	96-18-4	1,2,3 Trichloropropane	ND	mg / Kg	1	0.005		02/09/0
X0127	XG.2001.198-1	95-63-6	1,2,4-Trimethylbenzene	ND	mg / Kg	1	0.005		02/09/0
X0127	XG.2001.198-1	541-73-1	1,3 Dichlorobenzene	ND	mg / Kg	1	0.005		02/09/0
X0127	XG.2001.198-1	108-67-8	1,3,5-Trimethylbenzene	ND	mg / Kg	1	0.005		02/09/0
X0127	XG.2001.198-1	764-41-0	1,4 Dichloro-2-butene	ND	mg / Kg	1	0.05		02/09/0
X0127	XG.2001.198-1	106-46-7	1,4 Dichlorobenzene	ND	mg / Kg	1	0.005		02/09/0
X0127	XG.2001.198-1	78-93-3	2-Butanone (MEK)	ND	mg / Kg	1	0.025		02/09/0
X0127	XG.2001.198-1	110-75-8	2-Chloroethylvinylether	ND	mg / Kg	1	0.025		02/09/0
X0127	XG.2001.198-1	591-78-6	2-Hexanone (MBK)	ND	mg / Kg	1	0.025		02/09/0
X0127	XG.2001.198-1	108-10-1	4-Methyl-2-pentanone (MIBK)	ND	mg / Kg	1	0.025		02/09/0
X0127	XG.2001.198-1	67-64-1	Acetone	ND	mg / Kg	1	0.05		02/09/0
X0127	XG.2001.198-1	107-02-8	Acrolein	ND	mg / Kg	1	0.1		02/09/0
X0127	XG.2001.198-1	107-13-1	Acrylonitrile	ND	mg / Kg	1	0.1		02/09/0
X0127	XG.2001.198-1	71-43-2	Benzene	ND	mg / Kg	1	0.005		02/09/0
X0127	XG.2001.198-1	75-27-4	Bromodichloromethane	ND	mg / Kg	1	0.005		02/09/0
X0127	XG.2001.198-1	75-25-2	Bromoform	ND	mg / Kg	1	0.005		02/09/0
X0127	XG.2001.198-1	74-83-9	Bromomethane	ND	mg / Kg	1	0.025		02/09/0
X0127	XG.2001.198-1	75-15-0	Carbon disulfide	ND	mg / Kg	1	0.025		02/09/0
X0127	XG.2001.198-1	56-23-5	Carbon tetrachloride	ND	mg / Kg	1	0.005		02/09/0
X0127	XG.2001.198-1	108-90-7	Chlorobenzene	ND	mg / Kg	1	0.005		02/09

Quality Control Summary

Client: **CH2MHILL**

Project: **0102072** **160660.02.FF.SA**

Explanation of codes	
D	*Not applicable due to sample dilution*
L	*Not applicable due to MDL proximity*

X0127	XG.2001.198-1	124-48-1	Chlorodibromomethane	ND	mg / Kg	1	0.005		02/09/01
X0127	XG.2001.198-1	75-00-3	Chloroethane	ND	mg / Kg	1	0.025		02/09/01
X0127	XG.2001.198-1	67-66-3	Chloroform	ND	mg / Kg	1	0.005		02/09/01
X0127	XG.2001.198-1	74-87-3	Chloromethane	ND	mg / Kg	1	0.025		02/09/01
X0127	XG.2001.198-1	156-59-2	cis-1,2 dichloroethene	ND	mg / Kg	1	0.005		02/09/01
X0127	XG.2001.198-1	10061-01-5	cis-1,3 dichloropropene	ND	mg / Kg	1	0.005		02/09/01
X0127	XG.2001.198-1	74-95-3	Dibromomethane	ND	mg / Kg	1	0.005		02/09/01
X0127	XG.2001.198-1	97-63-2	Ethyl methacrylate	ND	mg / Kg	1	0.025		02/09/01
X0127	XG.2001.198-1	100-41-4	Ethylbenzene	ND	mg / Kg	1	0.005		02/09/01
X0127	XG.2001.198-1		Freon 113	ND	mg / Kg	1	0.025		02/09/01
X0127	XG.2001.198-1	75-71-8	Freon 12	ND	mg / Kg	1	0.05		02/09/01
X0127	XG.2001.198-1	74-88-4	Iodomethane	ND	mg / Kg	1	0.025		02/09/01
X0127	XG.2001.198-1	1634-04-4	Methyl t-butyl ether (MTBE)	ND	mg / Kg	1	0.005		02/09/01
X0127	XG.2001.198-1	75-09-2	Methylene chloride	ND	mg / Kg	1	0.05		02/09/01
X0127	XG.2001.198-1	91-20-3	Naphthalene	ND	mg / Kg	1	0.025		02/09/01
X0127	XG.2001.198-1	95-47-6	o-Xylene	ND	mg / Kg	1	0.005		02/09/01
X0127	XG.2001.198-1	108-38-3/106-42	p/m Xylenes	ND	mg / Kg	1	0.01		02/09/01
X0127	XG.2001.198-1	100-42-5	Styrene	ND	mg / Kg	1	0.005		02/09/01
X0127	XG.2001.198-1	156-60-5	t-1,2 Dichloroethene	ND	mg / Kg	1	0.005		02/09/01
X0127	XG.2001.198-1	10061-02-6	t-1,3 Dichloropropene	ND	mg / Kg	1	0.005		02/09/01
X0127	XG.2001.198-1	127-18-4	Tetrachloroethene	ND	mg / Kg	1	0.005		02/09/01
X0127	XG.2001.198-1	108-88-3	Toluene	ND	mg / Kg	1	0.005		02/09/01
X0127	XG.2001.198-1	79-01-6	Trichloroethene	ND	mg / Kg	1	0.005		02/09/01
	XG.2001.198-1	75-69-4	Trichlorofluoromethane	ND	mg / Kg	1	0.025		02/09/01
X0127	XG.2001.198-1	108-05-4	Vinyl acetate	ND	mg / Kg	1	0.025		02/09/01
X0127	XG.2001.198-1	75-01-4	Vinyl chloride	ND	mg / Kg	1	0.025		02/09/01

X0127-039 **SW846 8260A Purgeable VOCs by GC/MS**

X0127	XG.2001.198-9	75-34-3	1,1 Dichloroethane	ND	mg / Kg	1	0.005		02/13/01
X0127	XG.2001.198-9	75-34-3	1,1 Dichloroethene	ND	mg / Kg	1	0.005		02/13/01
X0127	XG.2001.198-9	71-55-6	1,1,1 Trichloroethane	ND	mg / Kg	1	0.005		02/13/01
X0127	XG.2001.198-9	630-20-6	1,1,1,2 Tetrachloroethane	ND	mg / Kg	1	0.005		02/13/01
X0127	XG.2001.198-9	79-00-5	1,1,2 Trichloroethane	ND	mg / Kg	1	0.005		02/13/01
X0127	XG.2001.198-9	79-34-5	1,1,2,2 Tetrachloroethane	ND	mg / Kg	1	0.005		02/13/01
X0127	XG.2001.198-9	106-93-4	1,2 Dibromoethane (EDB)	ND	mg / Kg	1	0.005		02/13/01
X0127	XG.2001.198-9	95-50-1	1,2 Dichlorobenzene	ND	mg / Kg	1	0.005		02/13/01
X0127	XG.2001.198-9	107-06-2	1,2 Dichloroethane	ND	mg / Kg	1	0.005		02/13/01
X0127	XG.2001.198-9	78-87-5	1,2 Dichloropropane	ND	mg / Kg	1	0.005		02/13/01
X0127	XG.2001.198-9	96-18-4	1,2,3 Trichloropropane	ND	mg / Kg	1	0.005		02/13/01
X0127	XG.2001.198-9	95-63-6	1,2,4-Trimethylbenzene	ND	mg / Kg	1	0.005		02/13/01
X0127	XG.2001.198-9	541-73-1	1,3 Dichlorobenzene	ND	mg / Kg	1	0.005		02/13/01
X0127	XG.2001.198-9	108-67-8	1,3,5-Trimethylbenzene	ND	mg / Kg	1	0.005		02/13/01
X0127	XG.2001.198-9	764-41-0	1,4 Dichloro-2-butene	ND	mg / Kg	1	0.05		02/13/01
X0127	XG.2001.198-9	106-46-7	1,4 Dichlorobenzene	ND	mg / Kg	1	0.005		02/13/01
X0127	XG.2001.198-9	78-93-3	2-Butanone (MEK)	ND	mg / Kg	1	0.025		02/13/01
X0127	XG.2001.198-9	110-75-8	2-Chloroethylvinylether	ND	mg / Kg	1	0.025		02/13/01
X0127	XG.2001.198-9	591-78-6	2-Hexanone (MBK)	ND	mg / Kg	1	0.025		02/13/01
X0127	XG.2001.198-9	108-10-1	4-Methyl-2-pentanone (MIBK)	ND	mg / Kg	1	0.025		02/13/01
X0127	XG.2001.198-9	67-64-1	Acetone	ND	mg / Kg	1	0.05		02/13/01
	XG.2001.198-9	107-02-8	Acrolein	ND	mg / Kg	1	0.1		02/13/01

Quality Control Summary

Client: **CH2MHILL**

Project: **0102072** **160660.02.FF.SA**

Explanation of codes

D	*Not applicable due to sample dilu*
L	*Not applicable due to MDL proxin*

X0127	XG.2001.198-9	107-13-1	Acrylonitrile	ND	mg / Kg	1	0.1	02/13/0 1
X0127	XG.2001.198-9	71-43-2	Benzene	ND	mg / Kg	1	0.005	02/13/0 1
X0127	XG.2001.198-9	75-27-4	Bromodichloromethane	ND	mg / Kg	1	0.005	02/13/0 1
X0127	XG.2001.198-9	75-25-2	Bromoform	ND	mg / Kg	1	0.005	02/13/0 1
X0127	XG.2001.198-9	74-83-9	Bromomethane	ND	mg / Kg	1	0.025	02/13/0 1
X0127	XG.2001.198-9	75-15-0	Carbon disulfide	ND	mg / Kg	1	0.025	02/13/0 1
X0127	XG.2001.198-9	56-23-5	Carbon tetrachloride	ND	mg / Kg	1	0.005	02/13/0 1
X0127	XG.2001.198-9	108-90-7	Chlorobenzene	ND	mg / Kg	1	0.005	02/13/0 1
X0127	XG.2001.198-9	124-48-1	Chlorodibromomethane	ND	mg / Kg	1	0.005	02/13/0 1
X0127	XG.2001.198-9	75-00-3	Chloroethane	ND	mg / Kg	1	0.025	02/13/0 1
X0127	XG.2001.198-9	67-66-3	Chloroform	ND	mg / Kg	1	0.005	02/13/0 1
X0127	XG.2001.198-9	74-87-3	Chloromethane	ND	mg / Kg	1	0.025	02/13/0 1
X0127	XG.2001.198-9	156-59-2	cis-1,2 dichloroethene	ND	mg / Kg	1	0.005	02/13/0 1
X0127	XG.2001.198-9	10061-01-5	cis-1,3 dichloropropene	ND	mg / Kg	1	0.005	02/13/0 1
X0127	XG.2001.198-9	74-95-3	Dibromomethane	ND	mg / Kg	1	0.005	02/13/0 1
X0127	XG.2001.198-9	97-63-2	Ethyl methacrylate	ND	mg / Kg	1	0.025	02/13/0 1
X0127	XG.2001.198-9	100-41-4	Ethylbenzene	ND	mg / Kg	1	0.005	02/13/0 1
X0127	XG.2001.198-9		Freon 113	ND	mg / Kg	1	0.025	02/13/0 1
X0127	XG.2001.198-9	75-71-8	Freon 12	ND	mg / Kg	1	0.05	02/13/0 1
X0127	XG.2001.198-9	74-88-4	Iodomethane	ND	mg / Kg	1	0.025	02/13/0 1
X0127	XG.2001.198-9	1634-04-4	Methyl t-butyl ether (MTBE)	ND	mg / Kg	1	0.005	02/13/0 1
X0127	XG.2001.198-9	75-09-2	Methylene chloride	ND	mg / Kg	1	0.05	02/13/0 1
X0127	XG.2001.198-9	91-20-3	Naphthalene	ND	mg / Kg	1	0.025	02/13/01
X0127	XG.2001.198-9	95-47-6	o-Xylene	ND	mg / Kg	1	0.005	02/1
X0127	XG.2001.198-9	108-38-3/106-42	p/m Xylenes	ND	mg / Kg	1	0.01	02/1
X0127	XG.2001.198-9	100-42-5	Styrene	ND	mg / Kg	1	0.005	02/13/01
X0127	XG.2001.198-9	156-60-5	t-1,2 Dichloroethene	ND	mg / Kg	1	0.005	02/13/01
X0127	XG.2001.198-9	10061-02-6	t-1,3 Dichloropropene	ND	mg / Kg	1	0.005	02/13/01
X0127	XG.2001.198-9	127-18-4	Tetrachloroethene	ND	mg / Kg	1	0.005	02/13/01
X0127	XG.2001.198-9	108-88-3	Toluene	ND	mg / Kg	1	0.005	02/13/01
X0127	XG.2001.198-9	79-01-6	Trichloroethene	ND	mg / Kg	1	0.005	02/13/01
X0127	XG.2001.198-9	75-69-4	Trichlorofluoromethane	ND	mg / Kg	1	0.025	02/13/01
X0127	XG.2001.198-9	108-05-4	Vinyl acetate	ND	mg / Kg	1	0.025	02/13/01
X0127	XG.2001.198-9	75-01-4	Vinyl chloride	ND	mg / Kg	1	0.025	02/13/01

X0128-001 **SW846 3550A/8270B SVOCs by GC/MS**

X0128	XG.2001.83-1	120-82-1	1,2,4-Trichlorobenzene	ND	mg / Kg	1	0.03	01/21/01
X0128	XG.2001.83-1	95-50-1	1,2-Dichlorobenzene	ND	mg / Kg	1	0.03	01/21/01
X0128	XG.2001.83-1	541-73-1	1,3-Dichlorobenzene	ND	mg / Kg	1	0.03	01/21/01
X0128	XG.2001.83-1	106-46-7	1,4-Dichlorobenzene	ND	mg / Kg	1	0.03	01/21/01
X0128	XG.2001.83-1	90-12-0	1-Methylnaphthalene	ND	mg / Kg	1	0.03	01/21/01
X0128	XG.2001.83-1	58-90-2	2,3,4,6-Tetrachlorophenol	ND	mg / Kg	1	1.5	01/21/01
X0128	XG.2001.83-1	95-95-4	2,4,5-Trichlorophenol	ND	mg / Kg	1	0.3	01/21/01
X0128	XG.2001.83-1	88-06-2	2,4,6-Trichlorophenol	ND	mg / Kg	1	0.3	01/21/01
X0128	XG.2001.83-1	120-83-2	2,4-Dichlorophenol	ND	mg / Kg	1	0.3	01/21/01
X0128	XG.2001.83-1	105-67-9	2,4-Dimethylphenol	ND	mg / Kg	1	0.03	01/21/01
X0128	XG.2001.83-1	51-28-5	2,4-Dinitrophenol	ND	mg / Kg	1	0.67	01/21/01
X0128	XG.2001.83-1	121-14-2	2,4-Dinitrotoluene	ND	mg / Kg	1	0.3	01/21/01
X0128	XG.2001.83-1	606-20-2	2,6-Dinitrotoluene	ND	mg / Kg	1	0.3	01/21/01
X0128	XG.2001.83-1	91-58-7	2-Chloronaphthalene	ND	mg / Kg	1	0.03	01/2

Quality Control Summary

Explanation of codes

D	*Not applicable due to sample dilution*
L	*Not applicable due to MDL proximity*

Client: CH2MHILL

Project: 0102072 160660.02.FF.SA

X0128	XG.2001.83-1	95-57-8	2-Chlorophenol	ND	mg / Kg	1	0.03		01/21/01
X0128	XG.2001.83-1	91-57-6	2-Methylnaphthalene	ND	mg / Kg	1	0.03		01/21/01
X0128	XG.2001.83-1	95-48-7	2-Methylphenol	ND	mg / Kg	1	0.03		01/21/01
X0128	XG.2001.83-1	88-74-4	2-Nitroaniline	ND	mg / Kg	1	0.3		01/21/01
X0128	XG.2001.83-1	88-75-5	2-Nitrophenol	ND	mg / Kg	1	0.3		01/21/01
X0128	XG.2001.83-1		3+4 Methylphenol	ND	mg / Kg	1	0.03		01/21/01
X0128	XG.2001.83-1	91-94-1	3,3-Dichlorobenzidine	ND	mg / Kg	1	0.3		01/21/01
X0128	XG.2001.83-1	99-09-2	3-Nitroaniline	ND	mg / Kg	1	0.3		01/21/01
X0128	XG.2001.83-1	534-52-1	4,6-Dinitro-2-methylphenol	ND	mg / Kg	1	0.3		01/21/01
X0128	XG.2001.83-1	101-55-3	4-Bromophenyl-phenylether	ND	mg / Kg	1	0.03		01/21/01
X0128	XG.2001.83-1	59-50-7	4-Chloro-3-methylphenol	ND	mg / Kg	1	0.3		01/21/01
X0128	XG.2001.83-1	106-47-8	4-Chloroaniline	ND	mg / Kg	1	0.3		01/21/01
X0128	XG.2001.83-1	7005-72-3	4-Chlorophenyl-phenylether	ND	mg / Kg	1	0.03		01/21/01
X0128	XG.2001.83-1	100-01-6	4-Nitroaniline	ND	mg / Kg	1	0.3		01/21/01
X0128	XG.2001.83-1	100-02-7	4-Nitrophenol	ND	mg / Kg	1	0.6		01/21/01
X0128	XG.2001.83-1	83-32-9	Acenaphthene	ND	mg / Kg	1	0.03		01/21/01
X0128	XG.2001.83-1	208-96-8	Acenaphthylene	ND	mg / Kg	1	0.03		01/21/01
X0128	XG.2001.83-1	62-53-3	Aniline	ND	mg / Kg	1	0.3		01/21/01
X0128	XG.2001.83-1	120-12-7	Anthracene	ND	mg / Kg	1	0.03		01/21/01
X0128	XG.2001.83-1		Azobenzene&1,2-Diphenylhydrazine	ND	mg / Kg	1	0.03		01/21/01
X0128	XG.2001.83-1	56-55-3	Benzo (a) anthracene	ND	mg / Kg	1	0.03		01/21/01
X0128	XG.2001.83-1	50-32-8	Benzo(a)pyrene	ND	mg / Kg	1	0.03		01/21/01
[illegible]	XG.2001.83-1		Benzo(b & k)fluoranthene	ND	mg / Kg	1	0.03		01/21/01
[illegible]	XG.2001.83-1	191-24-2	Benzo(g,h,i)perylene	ND	mg / Kg	1	0.3		01/21/01
X0128	XG.2001.83-1	64-85-0	Benzoic acid	ND	mg / Kg	1	3		01/21/01
X0128	XG.2001.83-1	100-51-6	Benzyl alcohol	ND	mg / Kg	1	1.5		01/21/01
X0128	XG.2001.83-1	111-44-4	bis (2-Chloroethyl) ether	ND	mg / Kg	1	0.03		01/21/01
X0128	XG.2001.83-1	111-91-1	bis(2-Chloroethoxy)methane	ND	mg / Kg	1	0.03		01/21/01
X0128	XG.2001.83-1	108-60-1	bis(2-Chloroisopropyl)ether	ND	mg / Kg	1	0.03		01/21/01
X0128	XG.2001.83-1	117-81-7	bis(2-Ethylhexyl)phthalate	ND	mg / Kg	1	0.3		01/21/01
X0128	XG.2001.83-1	85-68-7	Butylbenzylphthalate	ND	mg / Kg	1	0.03		01/21/01
X0128	XG.2001.83-1	218-01-9	Chrysene	ND	mg / Kg	1	0.03		01/21/01
X0128	XG.2001.83-1	84-74-2	di-n-Butylphthalate	ND	mg / Kg	1	0.3		01/21/01
X0128	XG.2001.83-1	117-84-0	di-n-Octylpthalate	ND	mg / Kg	1	0.3		01/21/01
X0128	XG.2001.83-1	53-70-3	Dibenz(a,h)anthracene	ND	mg / Kg	1	0.3		01/21/01
X0128	XG.2001.83-1	132-64-9	Dibenzofuran	ND	mg / Kg	1	0.03		01/21/01
X0128	XG.2001.83-1	84-66-2	Diethylphthalate	ND	mg / Kg	1	0.03		01/21/01
X0128	XG.2001.83-1	131-11-3	Dimethylphthalate	ND	mg / Kg	1	0.03		01/21/01
X0128	XG.2001.83-1	206-44-0	Fluoranthene	ND	mg / Kg	1	0.03		01/21/01
X0128	XG.2001.83-1	86737	Fluorene	ND	mg / Kg	1	0.03		01/21/01
X0128	XG.2001.83-1	118-74-1	Hexachlorobenzene	ND	mg / Kg	1	0.03		01/21/01
X0128	XG.2001.83-1	87-68-3	Hexachlorobutadiene	ND	mg / Kg	1	0.03		01/21/01
X0128	XG.2001.83-1	77-47-4	Hexachlorocyclopentadiene	ND	mg / Kg	1	1.5		01/21/01
X0128	XG.2001.83-1	67-72-1	Hexachloroethane	ND	mg / Kg	1	0.03		01/21/01
X0128	XG.2001.83-1	193-39-5	Indeno(1,2,3-cd)pyrene	ND	mg / Kg	1	0.3		01/21/01
X0128	XG.2001.83-1	78-59-1	Isophorone	ND	mg / Kg	1	0.03		01/21/01
X0128	XG.2001.83-1	621-64-7	n-Nitroso-di-n-propylamine	ND	mg / Kg	1	0.03		01/21/01
X0128	XG.2001.83-1	62-75-9	n-Nitroso-dimethyl-amine	ND	mg / Kg	1	0.3		01/21/01
[illegible]8	XG.2001.83-1	86-30-6	n-Nitrosodiphenylamine	ND	mg / Kg	1	0.03		01/21/01
[illegible]0128	XG.2001.83-1	91-20-3	Naphthalene	ND	mg / Kg	1	0.03		01/21/01

Quality Control Summary

Client: **CH2MHILL**

Project: **0102072** **160660.02.FF.SA**

Explanation of codes	
D	*Not applicable due to sample dilut*
L	*Not applicable due to MDL proxim*

X0128	XG.2001.83-1	98-95-3	Nitrobenzene	ND	mg / Kg	1	0.03	01/21/0
X0128	XG.2001.83-1	87-86-5	Pentachlorophenol	ND	mg / Kg	1	0.3	01/21/0
X0128	XG.2001.83-1	85-01-8	Phenanthrene	ND	mg / Kg	1	0.03	01/21/0
X0128	XG.2001.83-1	108-95-2	Phenol	ND	mg / Kg	1	0.3	01/21/0
X0128	XG.2001.83-1	129-00-0	Pyrene	ND	mg / Kg	1	0.03	01/21/0
X0128	XG.2001.83-1	110-86-1	Pyridine	ND	mg / Kg	1	0.3	01/21/0
X0128-014		**SW846 3550A/8270B SVOCs by GC/MS**						
X0128	XG.2001.162-1	120-82-1	1,2,4-Trichlorobenzene	ND	mg / Kg	1	0.03	02/05/0
X0128	XG.2001.162-1	95-50-1	1,2-Dichlorobenzene	ND	mg / Kg	1	0.03	02/05/0
X0128	XG.2001.162-1	541-73-1	1,3-Dichlorobenzene	ND	mg / Kg	1	0.03	02/05/0
X0128	XG.2001.162-1	106-46-7	1,4-Dichlorobenzene	ND	mg / Kg	1	0.03	02/05/0
X0128	XG.2001.162-1	90-12-0	1-Methylnaphthalene	ND	mg / Kg	1	0.03	02/05/0
X0128	XG.2001.162-1	58-90-2	2,3,4,6-Tetrachlorophenol	ND	mg / Kg	1	1.5	02/05/0
X0128	XG.2001.162-1	95-95-4	2,4,5-Trichlorophenol	ND	mg / Kg	1	0.3	02/05/0
X0128	XG.2001.162-1	88-06-2	2,4,6-Trichlorophenol	ND	mg / Kg	1	0.3	02/05/0
X0128	XG.2001.162-1	120-83-2	2,4-Dichlorophenol	ND	mg / Kg	1	0.3	02/05/0
X0128	XG.2001.162-1	105-67-9	2,4-Dimethylphenol	ND	mg / Kg	1	0.03	02/05/0
X0128	XG.2001.162-1	51-28-5	2,4-Dinitrophenol	ND	mg / Kg	1	0.67	02/05/0
X0128	XG.2001.162-1	121-14-2	2,4-Dinitrotoluene	ND	mg / Kg	1	0.3	02/05/0
X0128	XG.2001.162-1	606-20-2	2,6-Dinitrotoluene	ND	mg / Kg	1	0.3	02/05/0
X0128	XG.2001.162-1	91-58-7	2-Chloronaphthalene	ND	mg / Kg	1	0.03	02/05/0
X0128	XG.2001.162-1	95-57-8	2-Chlorophenol	ND	mg / Kg	1	0.03	02/05/0
X0128	XG.2001.162-1	91-57-6	2-Methylnaphthalene	ND	mg / Kg	1	0.03	02/05/0
X0128	XG.2001.162-1	95-48-7	2-Methylphenol	ND	mg / Kg	1	0.03	02/0
X0128	XG.2001.162-1	88-74-4	2-Nitroaniline	ND	mg / Kg	1	0.3	02/05/0
X0128	XG.2001.162-1	88-75-5	2-Nitrophenol	ND	mg / Kg	1	0.3	02/05/0
X0128	XG.2001.162-1		3+4 Methylphenol	ND	mg / Kg	1	0.03	02/05/0
X0128	XG.2001.162-1	91-94-1	3,3-Dichlorobenzidine	ND	mg / Kg	1	0.3	02/05/0
X0128	XG.2001.162-1	99-09-2	3-Nitroaniline	ND	mg / Kg	1	0.3	02/05/0
X0128	XG.2001.162-1	534-52-1	4,6-Dinitro-2-methylphenol	ND	mg / Kg	1	0.3	02/05/0
X0128	XG.2001.162-1	101-55-3	4-Bromophenyl-phenylether	ND	mg / Kg	1	0.03	02/05/0
X0128	XG.2001.162-1	59-50-7	4-Chloro-3-methylphenol	ND	mg / Kg	1	0.3	02/05/0
X0128	XG.2001.162-1	106-47-8	4-Chloroaniline	ND	mg / Kg	1	0.3	02/05/0
X0128	XG.2001.162-1	7005-72-3	4-Chlorophenyl-phenylether	ND	mg / Kg	1	0.03	02/05/0
X0128	XG.2001.162-1	100-01-6	4-Nitroaniline	ND	mg / Kg	1	0.3	02/05/0
X0128	XG.2001.162-1	100-02-7	4-Nitrophenol	ND	mg / Kg	1	0.6	02/05/0
X0128	XG.2001.162-1	83-32-9	Acenaphthene	ND	mg / Kg	1	0.03	02/05/0
X0128	XG.2001.162-1	208-96-8	Acenaphthylene	ND	mg / Kg	1	0.03	02/05/0
X0128	XG.2001.162-1	62-53-3	Aniline	ND	mg / Kg	1	0.3	02/05/0
X0128	XG.2001.162-1	120-12-7	Anthracene	ND	mg / Kg	1	0.03	02/05/0
X0128	XG.2001.162-1		Azobenzene&1,2-Diphenylhydrazine	ND	mg / Kg	1	0.03	02/05/0
X0128	XG.2001.162-1	56-55-3	Benzo (a) anthracene	ND	mg / Kg	1	0.03	02/05/0
X0128	XG.2001.162-1	50-32-8	Benzo(a)pyrene	ND	mg / Kg	1	0.03	02/05/0
X0128	XG.2001.162-1		Benzo(b & k)fluoranthene	ND	mg / Kg	1	0.03	02/05/0
X0128	XG.2001.162-1	191-24-2	Benzo(g,h,i)perylene	ND	mg / Kg	1	0.3	02/05/0
X0128	XG.2001.162-1	64-85-0	Benzoic acid	ND	mg / Kg	1	3	02/05/0
X0128	XG.2001.162-1	100-51-6	Benzyl alcohol	ND	mg / Kg	1	1.5	02/05/0
X0128	XG.2001.162-1	111-44-4	bis (2-Chloroethyl) ether	ND	mg / Kg	1	0.03	02/05/0
X0128	XG.2001.162-1	111-91-1	bis(2-Chloroethoxy)methane	ND	mg / Kg	1	0.03	02/0

Quality Control Summary

Explanation of codes	
D	*Not applicable due to sample dilution*
L	*Not applicable due to MDL proximity*

Client: CH2MHILL

Project: 0102072 160660.02.FF.SA

X0128	XG.2001.162-1	108-60-1	bis(2-Chloroisopropyl)ether	ND	mg / Kg	1	0.03		02/05/01
X0128	XG.2001.162-1	117-81-7	bis(2-Ethylhexyl)phthalate	ND	mg / Kg	1	0.3		02/05/01
X0128	XG.2001.162-1	85-68-7	Butylbenzylphthalate	ND	mg / Kg	1	0.03		02/05/01
X0128	XG.2001.162-1	218-01-9	Chrysene	ND	mg / Kg	1	0.03		02/05/01
X0128	XG.2001.162-1	84-74-2	di-n-Butylphthalate	ND	mg / Kg	1	0.3		02/05/01
X0128	XG.2001.162-1	117-84-0	di-n-Octylpthalate	ND	mg / Kg	1	0.3		02/05/01
X0128	XG.2001.162-1	53-70-3	Dibenz(a,h)anthracene	ND	mg / Kg	1	0.3		02/05/01
X0128	XG.2001.162-1	132-64-9	Dibenzofuran	ND	mg / Kg	1	0.03		02/05/01
X0128	XG.2001.162-1	84-66-2	Diethylphthalate	ND	mg / Kg	1	0.03		02/05/01
X0128	XG.2001.162-1	131-11-3	Dimethylphthalate	ND	mg / Kg	1	0.03		02/05/01
X0128	XG.2001.162-1	206-44-0	Fluoranthene	ND	mg / Kg	1	0.03		02/05/01
X0128	XG.2001.162-1	86737	Fluorene	ND	mg / Kg	1	0.03		02/05/01
X0128	XG.2001.162-1	118-74-1	Hexachlorobenzene	ND	mg / Kg	1	0.03		02/05/01
X0128	XG.2001.162-1	87-68-3	Hexachlorobutadiene	ND	mg / Kg	1	0.03		02/05/01
X0128	XG.2001.162-1	77-47-4	Hexachlorocyclopentadiene	ND	mg / Kg	1	1.5		02/05/01
X0128	XG.2001.162-1	67-72-1	Hexachloroethane	ND	mg / Kg	1	0.03		02/05/01
X0128	XG.2001.162-1	193-39-5	Indeno(1,2,3-cd)pyrene	ND	mg / Kg	1	0.3		02/05/01
X0128	XG.2001.162-1	78-59-1	Isophorone	ND	mg / Kg	1	0.03		02/05/01
X0128	XG.2001.162-1	621-64-7	n-Nitroso-di-n-propylamine	ND	mg / Kg	1	0.03		02/05/01
X0128	XG.2001.162-1	62-75-9	n-Nitroso-dimethyl-amine	ND	mg / Kg	1	0.3		02/05/01
X0128	XG.2001.162-1	86-30-6	n-Nitrosodiphenylamine	ND	mg / Kg	1	0.03		02/05/01
X0128	XG.2001.162-1	91-20-3	Naphthalene	ND	mg / Kg	1	0.03		02/05/01
X0128	XG.2001.162-1	98-95-3	Nitrobenzene	ND	mg / Kg	1	0.03		02/05/01
[illegible]9	XG.2001.162-1	87-86-5	Pentachlorophenol	ND	mg / Kg	1	0.3		02/05/01
[illegible]8	XG.2001.162-1	85-01-8	Phenanthrene	ND	mg / Kg	1	0.03		02/05/01
X0128	XG.2001.162-1	108-95-2	Phenol	ND	mg / Kg	1	0.3		02/05/01
X0128	XG.2001.162-1	129-00-0	Pyrene	ND	mg / Kg	1	0.03		02/05/01
X0128	XG.2001.162-1	110-86-1	Pyridine	ND	mg / Kg	1	0.3		02/05/01

X0128-016 **SW846 3550A/8270B SVOCs by GC/MS**

X0128	XG.2001.189-2	120-82-1	1,2,4-Trichlorobenzene	ND	mg / Kg	1	0.03		02/09/01
X0128	XG.2001.189-2	95-50-1	1,2-Dichlorobenzene	ND	mg / Kg	1	0.03		02/09/01
X0128	XG.2001.189-2	541-73-1	1,3-Dichlorobenzene	ND	mg / Kg	1	0.03		02/09/01
X0128	XG.2001.189-2	106-46-7	1,4-Dichlorobenzene	ND	mg / Kg	1	0.03		02/09/01
X0128	XG.2001.189-2	90-12-0	1-Methylnaphthalene	ND	mg / Kg	1	0.03		02/09/01
X0128	XG.2001.189-2	58-90-2	2,3,4,6-Tetrachlorophenol	ND	mg / Kg	1	1.5		02/09/01
X0128	XG.2001.189-2	95-95-4	2,4,5-Trichlorophenol	ND	mg / Kg	1	0.3		02/09/01
X0128	XG.2001.189-2	88-06-2	2,4,6-Trichlorophenol	ND	mg / Kg	1	0.3		02/09/01
X0128	XG.2001.189-2	120-83-2	2,4-Dichlorophenol	ND	mg / Kg	1	0.3		02/09/01
X0128	XG.2001.189-2	105-67-9	2,4-Dimethylphenol	ND	mg / Kg	1	0.03		02/09/01
X0128	XG.2001.189-2	51-28-5	2,4-Dinitrophenol	ND	mg / Kg	1	0.67		02/09/01
X0128	XG.2001.189-2	121-14-2	2,4-Dinitrotoluene	ND	mg / Kg	1	0.3		02/09/01
X0128	XG.2001.189-2	606-20-2	2,6-Dinitrotoluene	ND	mg / Kg	1	0.3		02/09/01
X0128	XG.2001.189-2	91-58-7	2-Chloronaphthalene	ND	mg / Kg	1	0.03		02/09/01
X0128	XG.2001.189-2	95-57-8	2-Chlorophenol	ND	mg / Kg	1	0.03		02/09/01
X0128	XG.2001.189-2	91-57-6	2-Methylnaphthalene	ND	mg / Kg	1	0.03		02/09/01
X0128	XG.2001.189-2	95-48-7	2-Methylphenol	ND	mg / Kg	1	0.03		02/09/01
X0128	XG.2001.189-2	88-74-4	2-Nitroaniline	ND	mg / Kg	1	0.3		02/09/01
X0128	XG.2001.189-2	88-75-5	2-Nitrophenol	ND	mg / Kg	1	0.3		02/09/01
[illegible]28	XG.2001.189-2		3+4 Methylphenol	ND	mg / Kg	1	0.03		02/09/01
[illegible]8	XG.2001.189-2	91-94-1	3,3-Dichlorobenzidine	ND	mg / Kg	1	0.3		02/09/01

Quality Control Summary

Client: **CH2MHILL**

Project: **0102072** **160660.02.FF.SA**

Explanation of codes	
D	*Not applicable due to sample dilut*
L	*Not applicable due to MDL proxim*

X0128	XG.2001.189-2	99-09-2	3-Nitroaniline	ND	mg / Kg	1	0.3		02/09/01
X0128	XG.2001.189-2	534-52-1	4,6-Dinitro-2-methylphenol	ND	mg / Kg	1	0.3		02/09/01
X0128	XG.2001.189-2	101-55-3	4-Bromophenyl-phenylether	ND	mg / Kg	1	0.03		02/09/01
X0128	XG.2001.189-2	59-50-7	4-Chloro-3-methylphenol	ND	mg / Kg	1	0.3		02/09/01
X0128	XG.2001.189-2	106-47-8	4-Chloroaniline	ND	mg / Kg	1	0.3		02/09/01
X0128	XG.2001.189-2	7005-72-3	4-Chlorophenyl-phenylether	ND	mg / Kg	1	0.03		02/09/01
X0128	XG.2001.189-2	100-01-6	4-Nitroaniline	ND	mg / Kg	1	0.3		02/09/01
X0128	XG.2001.189-2	100-02-7	4-Nitrophenol	ND	mg / Kg	1	0.6		02/09/01
X0128	XG.2001.189-2	83-32-9	Acenaphthene	ND	mg / Kg	1	0.03		02/09/01
X0128	XG.2001.189-2	208-96-8	Acenaphthylene	ND	mg / Kg	1	0.03		02/09/01
X0128	XG.2001.189-2	62-53-3	Aniline	ND	mg / Kg	1	0.3		02/09/01
X0128	XG.2001.189-2	120-12-7	Anthracene	ND	mg / Kg	1	0.03		02/09/01
X0128	XG.2001.189-2		Azobenzene&1,2-Diphenylhydrazine	ND	mg / Kg	1	0.03		02/09/01
X0128	XG.2001.189-2	56-55-3	Benzo (a) anthracene	ND	mg / Kg	1	0.03		02/09/01
X0128	XG.2001.189-2	50-32-8	Benzo(a)pyrene	ND	mg / Kg	1	0.03		02/09/01
X0128	XG.2001.189-2		Benzo(b & k)fluoranthene	ND	mg / Kg	1	0.03		02/09/01
X0128	XG.2001.189-2	191-24-2	Benzo(g,h,i)perylene	ND	mg / Kg	1	0.3		02/09/01
X0128	XG.2001.189-2	64-85-0	Benzoic acid	ND	mg / Kg	1	3		02/09/01
X0128	XG.2001.189-2	100-51-6	Benzyl alcohol	ND	mg / Kg	1	1.5		02/09/01
X0128	XG.2001.189-2	111-44-4	bis (2-Chloroethyl) ether	ND	mg / Kg	1	0.03		02/09/01
X0128	XG.2001.189-2	111-91-1	bis(2-Chloroethoxy)methane	ND	mg / Kg	1	0.03		02/09/01
X0128	XG.2001.189-2	108-60-1	bis(2-Chloroisopropyl)ether	ND	mg / Kg	1	0.03		02/09/01
X0128	XG.2001.189-2	117-81-7	bis(2-Ethylhexyl)phthalate	ND	mg / Kg	1	0.3		02/09/01
X0128	XG.2001.189-2	85-68-7	Butylbenzylphthalate	ND	mg / Kg	1	0.03		02/09/
X0128	XG.2001.189-2	218-01-9	Chrysene	ND	mg / Kg	1	0.03		02/09/01
X0128	XG.2001.189-2	84-74-2	di-n-Butylphthalate	ND	mg / Kg	1	0.3		02/09/01
X0128	XG.2001.189-2	117-84-0	di-n-Octylpthalate	ND	mg / Kg	1	0.3		02/09/01
X0128	XG.2001.189-2	53-70-3	Dibenz(a,h)anthracene	ND	mg / Kg	1	0.3		02/09/01
X0128	XG.2001.189-2	132-64-9	Dibenzofuran	ND	mg / Kg	1	0.03		02/09/01
X0128	XG.2001.189-2	84-66-2	Diethylphthalate	ND	mg / Kg	1	0.03		02/09/01
X0128	XG.2001.189-2	131-11-3	Dimethylphthalate	ND	mg / Kg	1	0.03		02/09/01
X0128	XG.2001.189-2	206-44-0	Fluoranthene	ND	mg / Kg	1	0.03		02/09/01
X0128	XG.2001.189-2	86737	Fluorene	ND	mg / Kg	1	0.03		02/09/01
X0128	XG.2001.189-2	118-74-1	Hexachlorobenzene	ND	mg / Kg	1	0.03		02/09/01
X0128	XG.2001.189-2	87-68-3	Hexachlorobutadiene	ND	mg / Kg	1	0.03		02/09/01
X0128	XG.2001.189-2	77-47-4	Hexachlorocyclopentadiene	ND	mg / Kg	1	1.5		02/09/01
X0128	XG.2001.189-2	67-72-1	Hexachloroethane	ND	mg / Kg	1	0.03		02/09/01
X0128	XG.2001.189-2	193-39-5	Indeno(1,2,3-cd)pyrene	ND	mg / Kg	1	0.3		02/09/01
X0128	XG.2001.189-2	78-59-1	Isophorone	ND	mg / Kg	1	0.03		02/09/01
X0128	XG.2001.189-2	621-64-7	n-Nitroso-di-n-propylamine	ND	mg / Kg	1	0.03		02/09/01
X0128	XG.2001.189-2	62-75-9	n-Nitroso-dimethyl-amine	ND	mg / Kg	1	0.3		02/09/01
X0128	XG.2001.189-2	86-30-6	n-Nitrosodiphenylamine	ND	mg / Kg	1	0.03		02/09/01
X0128	XG.2001.189-2	91-20-3	Naphthalene	ND	mg / Kg	1	0.03		02/09/01
X0128	XG.2001.189-2	98-95-3	Nitrobenzene	ND	mg / Kg	1	0.03		02/09/01
X0128	XG.2001.189-2	87-86-5	Pentachlorophenol	ND	mg / Kg	1	0.3		02/09/01
X0128	XG.2001.189-2	85-01-8	Phenanthrene	ND	mg / Kg	1	0.03		02/09/01
X0128	XG.2001.189-2	108-95-2	Phenol	ND	mg / Kg	1	0.3		02/09/01
X0128	XG.2001.189-2	129-00-0	Pyrene	ND	mg / Kg	1	0.03		02/09/01
X0128	XG.2001.189-2	110-86-1	Pyridine	ND	mg / Kg	1	0.3		02/09/0

Quality Control Summary

Explanation of codes	
D	*Not applicable due to sample dilution*
L	*Not applicable due to MDL proximity*

Client: **CH2MHILL**

Project: **0102072** **160660.02.FF.SA**

X0128-018 **SW846 3550A/8270B SVOCs by GC/MS**

X0128	XG.2001.201-1	120-82-1	1,2,4-Trichlorobenzene	ND	mg / Kg	1	0.03		02/13/01
X0128	XG.2001.201-1	95-50-1	1,2-Dichlorobenzene	ND	mg / Kg	1	0.03		02/13/01
X0128	XG.2001.201-1	541-73-1	1,3-Dichlorobenzene	ND	mg / Kg	1	0.03		02/13/01
X0128	XG.2001.201-1	106-46-7	1,4-Dichlorobenzene	ND	mg / Kg	1	0.03		02/13/01
X0128	XG.2001.201-1	90-12-0	1-Methylnaphthalene	ND	mg / Kg	1	0.03		02/13/01
X0128	XG.2001.201-1	58-90-2	2,3,4,6-Tetrachlorophenol	ND	mg / Kg	1	1.5		02/13/01
X0128	XG.2001.201-1	95-95-4	2,4,5-Trichlorophenol	ND	mg / Kg	1	0.3		02/13/01
X0128	XG.2001.201-1	88-06-2	2,4,6-Trichlorophenol	ND	mg / Kg	1	0.3		02/13/01
X0128	XG.2001.201-1	120-83-2	2,4-Dichlorophenol	ND	mg / Kg	1	0.3		02/13/01
X0128	XG.2001.201-1	105-67-9	2,4-Dimethylphenol	ND	mg / Kg	1	0.03		02/13/01
X0128	XG.2001.201-1	51-28-5	2,4-Dinitrophenol	ND	mg / Kg	1	0.67		02/13/01
X0128	XG.2001.201-1	121-14-2	2,4-Dinitrotoluene	ND	mg / Kg	1	0.3		02/13/01
X0128	XG.2001.201-1	606-20-2	2,6-Dinitrotoluene	ND	mg / Kg	1	0.3		02/13/01
X0128	XG.2001.201-1	91-58-7	2-Chloronaphthalene	ND	mg / Kg	1	0.03		02/13/01
X0128	XG.2001.201-1	95-57-8	2-Chlorophenol	ND	mg / Kg	1	0.03		02/13/01
X0128	XG.2001.201-1	91-57-6	2-Methylnaphthalene	ND	mg / Kg	1	0.03		02/13/01
X0128	XG.2001.201-1	95-48-7	2-Methylphenol	ND	mg / Kg	1	0.03		02/13/01
X0128	XG.2001.201-1	88-74-4	2-Nitroaniline	ND	mg / Kg	1	0.3		02/13/01
X0128	XG.2001.201-1	88-75-5	2-Nitrophenol	ND	mg / Kg	1	0.3		02/13/01
X0128	XG.2001.201-1		3+4 Methylphenol	ND	mg / Kg	1	0.03		02/13/01
X0128	XG.2001.201-1	91-94-1	3,3-Dichlorobenzidine	ND	mg / Kg	1	0.3		02/13/01
X0128	XG.2001.201-1	99-09-2	3-Nitroaniline	ND	mg / Kg	1	0.3		02/13/01
	XG.2001.201-1	534-52-1	4,6-Dinitro-2-methylphenol	ND	mg / Kg	1	0.3		02/13/01
X0128	XG.2001.201-1	101-55-3	4-Bromophenyl-phenylether	ND	mg / Kg	1	0.03		02/13/01
X0128	XG.2001.201-1	59-50-7	4-Chloro-3-methylphenol	ND	mg / Kg	1	0.3		02/13/01
X0128	XG.2001.201-1	106-47-8	4-Chloroaniline	ND	mg / Kg	1	0.3		02/13/01
X0128	XG.2001.201-1	7005-72-3	4-Chlorophenyl-phenylether	ND	mg / Kg	1	0.03		02/13/01
X0128	XG.2001.201-1	100-01-6	4-Nitroaniline	ND	mg / Kg	1	0.3		02/13/01
X0128	XG.2001.201-1	100-02-7	4-Nitrophenol	ND	mg / Kg	1	0.6		02/13/01
X0128	XG.2001.201-1	83-32-9	Acenaphthene	ND	mg / Kg	1	0.03		02/13/01
X0128	XG.2001.201-1	208-96-8	Acenaphthylene	ND	mg / Kg	1	0.03		02/13/01
X0128	XG.2001.201-1	62-53-3	Aniline	ND	mg / Kg	1	0.3		02/13/01
X0128	XG.2001.201-1	120-12-7	Anthracene	ND	mg / Kg	1	0.03		02/13/01
X0128	XG.2001.201-1		Azobenzene&1,2-Diphenylhydrazine	ND	mg / Kg	1	0.03		02/13/01
X0128	XG.2001.201-1	56-55-3	Benzo (a) anthracene	ND	mg / Kg	1	0.03		02/13/01
X0128	XG.2001.201-1	50-32-8	Benzo(a)pyrene	ND	mg / Kg	1	0.03		02/13/01
X0128	XG.2001.201-1		Benzo(b & k)fluoranthene	ND	mg / Kg	1	0.03		02/13/01
X0128	XG.2001.201-1	191-24-2	Benzo(g,h,i)perylene	ND	mg / Kg	1	0.3		02/13/01
X0128	XG.2001.201-1	64-85-0	Benzoic acid	ND	mg / Kg	1	3		02/13/01
X0128	XG.2001.201-1	100-51-6	Benzyl alcohol	ND	mg / Kg	1	1.5		02/13/01
X0128	XG.2001.201-1	111-44-4	bis (2-Chloroethyl) ether	ND	mg / Kg	1	0.03		02/13/01
X0128	XG.2001.201-1	111-91-1	bis(2-Chloroethoxy)methane	ND	mg / Kg	1	0.03		02/13/01
X0128	XG.2001.201-1	108-60-1	bis(2-Chloroisopropyl)ether	ND	mg / Kg	1	0.03		02/13/01
X0128	XG.2001.201-1	117-81-7	bis(2-Ethylhexyl)phthalate	ND	mg / Kg	1	0.3		02/13/01
X0128	XG.2001.201-1	85-68-7	Butylbenzylphthalate	ND	mg / Kg	1	0.03		02/13/01
X0128	XG.2001.201-1	218-01-9	Chrysene	ND	mg / Kg	1	0.03		02/13/01
X0128	XG.2001.201-1	84-74-2	di-n-Butylphthalate	ND	mg / Kg	1	0.3		02/13/01
	XG.2001.201-1	117-84-0	di-n-Octylpthalate	ND	mg / Kg	1	0.3		02/13/01

Quality Control Summary

Client: **CH2MHILL**

Project: **0102072** **160660.02.FF.SA**

Explanation of codes

D	*Not applicable due to sample dilu*
L	*Not applicable due to MDL proxim*

X0128	XG.2001.201-1	53-70-3	Dibenz(a,h)anthracene	ND	mg / Kg	1	0.3		02/13/01
X0128	XG.2001.201-1	132-64-9	Dibenzofuran	ND	mg / Kg	1	0.03		02/13/01
X0128	XG.2001.201-1	84-66-2	Diethylphthalate	ND	mg / Kg	1	0.03		02/13/01
X0128	XG.2001.201-1	131-11-3	Dimethylphthalate	ND	mg / Kg	1	0.03		02/13/01
X0128	XG.2001.201-1	206-44-0	Fluoranthene	ND	mg / Kg	1	0.03		02/13/01
X0128	XG.2001.201-1	86737	Fluorene	ND	mg / Kg	1	0.03		02/13/01
X0128	XG.2001.201-1	118-74-1	Hexachlorobenzene	ND	mg / Kg	1	0.03		02/13/01
X0128	XG.2001.201-1	87-68-3	Hexachlorobutadiene	ND	mg / Kg	1	0.03		02/13/01
X0128	XG.2001.201-1	77-47-4	Hexachlorocyclopentadiene	ND	mg / Kg	1	1.5		02/13/01
X0128	XG.2001.201-1	67-72-1	Hexachloroethane	ND	mg / Kg	1	0.03		02/13/01
X0128	XG.2001.201-1	193-39-5	Indeno(1,2,3-cd)pyrene	ND	mg / Kg	1	0.3		02/13/01
X0128	XG.2001.201-1	78-59-1	Isophorone	ND	mg / Kg	1	0.03		02/13/01
X0128	XG.2001.201-1	621-64-7	n-Nitroso-di-n-propylamine	ND	mg / Kg	1	0.03		02/13/01
X0128	XG.2001.201-1	62-75-9	n-Nitroso-dimethyl-amine	ND	mg / Kg	1	0.3		02/13/01
X0128	XG.2001.201-1	86-30-6	n-Nitrosodiphenylamine	ND	mg / Kg	1	0.03		02/13/01
X0128	XG.2001.201-1	91-20-3	Naphthalene	ND	mg / Kg	1	0.03		02/13/01
X0128	XG.2001.201-1	98-95-3	Nitrobenzene	ND	mg / Kg	1	0.03		02/13/01
X0128	XG.2001.201-1	87-86-5	Pentachlorophenol	ND	mg / Kg	1	0.3		02/13/01
X0128	XG.2001.201-1	85-01-8	Phenanthrene	ND	mg / Kg	1	0.03		02/13/01
X0128	XG.2001.201-1	108-95-2	Phenol	ND	mg / Kg	1	0.3		02/13/01
X0128	XG.2001.201-1	129-00-0	Pyrene	ND	mg / Kg	1	0.03		02/13/01
X0128	XG.2001.201-1	110-86-1	Pyridine	ND	mg / Kg	1	0.3		02/13/01
X0148-001		**SW846 ME/8015A Diesel Range Organics by GC/FID**							
X0148	XG.2001.169-1		Diesel Range Organics	ND	mg / Kg	1	25		02/0
X0148-008		**SW846 ME/8015A Diesel Range Organics by GC/FID**							
X0148	XG.2001.175-1		Diesel Range Organics	ND	mg / Kg	1	25		02/08/01
X0148-011		**SW846 ME/8015A Diesel Range Organics by GC/FID**							
X0148	XG.2001.182-1		Diesel Range Organics	ND	mg / Kg	1	25		02/09/01
X0148-013		**SW846 ME/8015A Diesel Range Organics by GC/FID**							
X0148	XG.2001.194-1		Diesel Range Organics	ND	mg / Kg	1	25		02/14/01
X0148-017		**SW846 ME/8015A Diesel Range Organics by GC/FID**							
X0148	XG.2001.213-1		Diesel Range Organics	ND	mg / Kg	1	25		02/21/01
X0150-001		**SW846 5030A/8015A GRO by GC/FID**							
X0150	XG.2001.174-1		Gasoline Range Organics	ND	mg / Kg	1	0.25		02/07/01
X0150-008		**SW846 5030A/8015A GRO by GC/FID**							
X0150	XG.2001.183-1		Gasoline Range Organics	ND	mg / Kg	1	0.25		02/09/01
X0150-010		**SW846 5030A/8015A GRO by GC/FID**							
X0150	XG.2001.192-1		Gasoline Range Organics	ND	mg / Kg	1	0.25		02/13/01
X0150-014		**SW846 5030A/8015A GRO by GC/FID**							
X0150	XG.2001.214-1		Gasoline Range Organics	ND	mg / Kg	1	0.25		02/21/01

Quality Control Summary

Explanation of codes	
D	*Not applicable due to sample dilution*
L	*Not applicable due to MDL proximity*

Client: **CH2MHILL**

Project: **0102072** **160660.02.FF.SA**

QC Type **MS: Matrix Spike** QC Matrix **SOLID**

QC Group	Run Sequence	CAS #	Analyte	Result	Units	Dilution Factor	Detection Limit	Code	Run Date
X0127-003		**SW846 8260A Purgeable VOCs by GC/MS**							
X0127	XG.2001.69-3	75-34-3	1,1 Dichloroethene	116	% Recovery	1	NA		01/18/01
X0127	XG.2001.69-3	106-46-7	1,4 Dichlorobenzene	104	% Recovery	1	NA		01/18/01
X0127	XG.2001.69-3	71-43-2	Benzene	117	% Recovery	1	NA		01/18/01
X0127	XG.2001.69-3	108-90-7	Chlorobenzene	110	% Recovery	1	NA		01/18/01
X0127	XG.2001.69-3	108-88-3	Toluene	117	% Recovery	1	NA		01/18/01
X0127	XG.2001.69-3	79-01-6	Trichloroethene	109	% Recovery	1	NA		01/18/01
X0128-005		**SW846 3550A/8270B SVOCs by GC/MS**							
X0128	XG.2001.92-2	120-82-1	1,2,4-Trichlorobenzene	72	% Recovery	1	NA		01/22/01
X0128	XG.2001.92-2	106-46-7	1,4-Dichlorobenzene	75	% Recovery	1	NA		01/22/01
X0128	XG.2001.92-2	121-14-2	2,4-Dinitrotoluene	84	% Recovery	1	NA		01/22/01
X0128	XG.2001.92-2	95-57-8	2-Chlorophenol	84	% Recovery	1	NA		01/22/01
X0128	XG.2001.92-2	59-50-7	4-Chloro-3-methylphenol	89	% Recovery	1	NA		01/22/01
X0128	XG.2001.92-2	100-02-7	4-Nitrophenol	95	% Recovery	1	NA		01/22/01
X0128	XG.2001.92-2	83-32-9	Acenaphthene	94	% Recovery	1	NA		01/22/01
X0128	XG.2001.92-2	117-84-0	di-n-Octylpthalate	80	% Recovery	1	NA		01/22/01
[illegible]	XG.2001.92-2	621-64-7	n-Nitroso-di-n-propylamine	94	% Recovery	1	NA		01/22/01
[illegible]	XG.2001.92-2	87-86-5	Pentachlorophenol	94	% Recovery	1	NA		01/22/01
X0128	XG.2001.92-2	108-95-2	Phenol	79	% Recovery	1	NA		01/22/01
X0128	XG.2001.92-2	129-00-0	Pyrene	95	% Recovery	1	NA		01/22/01
X0148-005		**SW846 ME/8015A Diesel Range Organics by GC/FID**							
X0148	XG.2001.169-5		Diesel Range Organics	99	% Recovery	1	NA		02/07/01
X0150-006		**SW846 5030A/8015A GRO by GC/FID**							
X0150	XG.2001.174-6		Gasoline Range Organics	94	% Recovery	1	NA		02/07/01

QC Type **MSD: Matrix Spike Duplicate Accuracy** QC Matrix **SOLID**

QC Group	Run Sequence	CAS #	Analyte	Result	Units	Dilution Factor	Detection Limit	Code	Run Date
X0127-004		**SW846 8260A Purgeable VOCs by GC/MS**							
X0127	XG.2001.69-4	75-34-3	1,1 Dichloroethene	113	% Recovery	1	NA		01/18/01
X0127	XG.2001.69-4	106-46-7	1,4 Dichlorobenzene	103	% Recovery	1	NA		01/18/01
X0127	XG.2001.69-4	71-43-2	Benzene	116	% Recovery	1	NA		01/18/01
X0127	XG.2001.69-4	108-90-7	Chlorobenzene	110	% Recovery	1	NA		01/18/01
X0127	XG.2001.69-4	108-88-3	Toluene	116	% Recovery	1	NA		01/18/01
X0127	XG.2001.69-4	79-01-6	Trichloroethene	108	% Recovery	1	NA		01/18/01
X0128-006		**SW846 3550A/8270B SVOCs by GC/MS**							
X0128	XG.2001.92-3	120-82-1	1,2,4-Trichlorobenzene	65	% Recovery	1	NA		01/22/01
X0128	XG.2001.92-3	106-46-7	1,4-Dichlorobenzene	68	% Recovery	1	NA		01/22/01
[illegible]	XG.2001.92-3	121-14-2	2,4-Dinitrotoluene	82	% Recovery	1	NA		01/22/01
X0128	XG.2001.92-3	95-57-8	2-Chlorophenol	76	% Recovery	1	NA		01/22/01

Quality Control Summary

Explanation of codes	
D	*Not applicable due to sample dilutio*
L	*Not applicable due to MDL proxim*

Client: **CH2MHILL**

Project: **0102072** **160660.02.FF.SA**

X0128	XG.2001.92-3	59-50-7	4-Chloro-3-methylphenol	85	% Recovery	1	NA		01/22/01
X0128	XG.2001.92-3	100-02-7	4-Nitrophenol	94	% Recovery	1	NA		01/22/01
X0128	XG.2001.92-3	83-32-9	Acenaphthene	89	% Recovery	1	NA		01/22/01
X0128	XG.2001.92-3	117-84-0	di-n-Octylpthalate	79	% Recovery	1	NA		01/22/01
X0128	XG.2001.92-3	621-64-7	n-Nitroso-di-n-propylamine	90	% Recovery	1	NA		01/22/01
X0128	XG.2001.92-3	87-86-5	Pentachlorophenol	92	% Recovery	1	NA		01/22/01
X0128	XG.2001.92-3	108-95-2	Phenol	72	% Recovery	1	NA		01/22/01
X0128	XG.2001.92-3	129-00-0	Pyrene	88	% Recovery	1	NA		01/22/01
X0148-006		**SW846 ME/8015A Diesel Range Organics by GC/FID**							
X0148	XG.2001.169-6		Diesel Range Organics	96	% Recovery	1	NA		02/07/01
X0150-007		**SW846 5030A/8015A GRO by GC/FID**							
X0150	XG.2001.174-7		Gasoline Range Organics	92	% Recovery	1	NA		02/07/01

QC Type **MSD: Matrix Spike Duplicate Precision** QC Matrix **SOLID**

QC Group	Run Sequence	CAS #	Analyte	Result	Units	Dilution Factor	Detection Limit	Code	Run Date
X0127-004		**SW846 8260A Purgeable VOCs by GC/MS**							
X0127	XG.2001.69-4	75-34-3	1,1 Dichloroethene	2	RPD	1	NA		01/18/01
X0127	XG.2001.69-4	106-46-7	1,4 Dichlorobenzene	< 1	RPD	1	NA		01/18/01
X0127	XG.2001.69-4	71-43-2	Benzene	1	RPD	1	NA		01/18/01
X0127	XG.2001.69-4	108-90-7	Chlorobenzene	< 1	RPD	1	NA		01/18
X0127	XG.2001.69-4	108-88-3	Toluene	< 1	RPD	1	NA		01/18/01
X0127	XG.2001.69-4	79-01-6	Trichloroethene	< 1	RPD	1	NA		01/18/01
X0128-006		**SW846 3550A/8270B SVOCs by GC/MS**							
X0128	XG.2001.92-3	120-82-1	1,2,4-Trichlorobenzene	10	RPD	1	NA		01/22/01
X0128	XG.2001.92-3	106-46-7	1,4-Dichlorobenzene	10	RPD	1	NA		01/22/01
X0128	XG.2001.92-3	121-14-2	2,4-Dinitrotoluene	3	RPD	1	NA		01/22/01
X0128	XG.2001.92-3	95-57-8	2-Chlorophenol	10	RPD	1	NA		01/22/01
X0128	XG.2001.92-3	59-50-7	4-Chloro-3-methylphenol	4	RPD	1	NA		01/22/01
X0128	XG.2001.92-3	100-02-7	4-Nitrophenol	< 1	RPD	1	NA		01/22/01
X0128	XG.2001.92-3	83-32-9	Acenaphthene	5	RPD	1	NA		01/22/01
X0128	XG.2001.92-3	117-84-0	di-n-Octylpthalate	2	RPD	1	NA		01/22/01
X0128	XG.2001.92-3	621-64-7	n-Nitroso-di-n-propylamine	4	RPD	1	NA		01/22/01
X0128	XG.2001.92-3	87-86-5	Pentachlorophenol	2	RPD	1	NA		01/22/01
X0128	XG.2001.92-3	108-95-2	Phenol	9	RPD	1	NA		01/22/01
X0128	XG.2001.92-3	129-00-0	Pyrene	8	RPD	1	NA		01/22/01
X0148-006		**SW846 ME/8015A Diesel Range Organics by GC/FID**							
X0148	XG.2001.169-6		Diesel Range Organics	3	RPD	1	NA		02/07/01
X0150-007		**SW846 5030A/8015A GRO by GC/FID**							
X0150	XG.2001.174-7		Gasoline Range Organics	3	RPD	1	NA		02/07/01

Surrogate Summary: QC

Client: **CH2MHILL**

Project: **0102072** **160660.02.FF.SA**

QC Type **LCS** QC Matrix **SOLID**

QC Group	Run Sequence	CAS #	Analyte	Result	Units	Dilution Factor	Detection Limit	Code	Run Date
X0127-005		**8260**							
X0127	XG.2001.69-5	NA	1,2 Dichloroethane-D4 (SS)	87	% Recovery	1	NA		01/18/01
X0127	XG.2001.69-5	NA	4-Bromofluorobenzene (SS)	96	% Recovery	1	NA		01/18/01
X0127	XG.2001.69-5	NA	Dibromofluoromethane (SS)	101	% Recovery	1	NA		01/18/01
X0127	XG.2001.69-5	NA	Toluene-D8 (SS)	102	% Recovery	1	NA		01/18/01
X0128-002		**8270**							
X0128	XG.2001.83-2	NA	*2,4,6-TRIBROMOPHENOL	98	% Recovery	1	NA		01/21/01
X0128	XG.2001.83-2	NA	*2-FLUOROBIPHENYL	92	% Recovery	1	NA		01/21/01
X0128	XG.2001.83-2	NA	*2-FLUOROPHENOL	78	% Recovery	1	NA		01/21/01
X0128	XG.2001.83-2	NA	*NITROBENZENE-D5	86	% Recovery	1	NA		01/21/01
X0128	XG.2001.83-2	NA	*PHENOL-D6	86	% Recovery	1	NA		01/21/01
X0128	XG.2001.83-2	NA	*TERPHENYL-D14	91	% Recovery	1	NA		01/21/01
X0148-002		**DRO**							
X0148	XG.2001.169-2	NA	O-terphenyl	102	% Recovery	1	NA		02/07/01

LCSD QC Matrix **SOLID**

QC Group	Run Sequence	CAS #	Analyte	Result	Units	Dilution Factor	Detection Limit	Code	Run Date
X0127-006		**8260**							
X0127	XG.2001.69-6	NA	1,2 Dichloroethane-D4 (SS)	91	% Recovery	1	NA		01/18/01
X0127	XG.2001.69-6	NA	4-Bromofluorobenzene (SS)	98	% Recovery	1	NA		01/18/01
X0127	XG.2001.69-6	NA	Dibromofluoromethane (SS)	101	% Recovery	1	NA		01/18/01
X0127	XG.2001.69-6	NA	Toluene-D8 (SS)	102	% Recovery	1	NA		01/18/01
X0128-003		**8270**							
X0128	XG.2001.83-3	NA	*2,4,6-TRIBROMOPHENOL	95	% Recovery	1	NA		01/21/01
X0128	XG.2001.83-3	NA	*2-FLUOROBIPHENYL	86	% Recovery	1	NA		01/21/01
X0128	XG.2001.83-3	NA	*2-FLUOROPHENOL	72	% Recovery	1	NA		01/21/01
X0128	XG.2001.83-3	NA	*NITROBENZENE-D5	81	% Recovery	1	NA		01/21/01
X0128	XG.2001.83-3	NA	*PHENOL-D6	80	% Recovery	1	NA		01/21/01
X0128	XG.2001.83-3	NA	*TERPHENYL-D14	90	% Recovery	1	NA		01/21/01
X0148-003		**DRO**							
X0148	XG.2001.169-3	NA	O-terphenyl	104	% Recovery	1	NA		02/07/01
X0150-003		**GRO**							
X0150	XG.2001.174-3	NA	4-Bromofluorobenzene-FID	100	% Recovery	1	NA		02/07/01
X0150	XG.2001.174-3	NA	4-Bromofluorobenzene-PID	ND	% Recovery	1	NA		02/07/01
X0150	XG.2001.174-3	NA	aaa-Trifluorotoluene-FID	107	% Recovery	1	NA		02/07/01
X0150	XG.2001.174-3	NA	aaa-Trifluorotoluene-PID	ND	% Recovery	1	NA		02/07/01

Surrogate Summary: QC

Client: **CH2MHILL**

Project: **0102072** **160660.02.FF.SA**

QC Type **MB** QC Matrix **SOLID**

QC Group	Run Sequence	CAS #	Analyte	Result	Units	Dilution Factor	Detection Limit	Code	Run Date
X0127-001		**8260**							
X0127	XG.2001.69-1	NA	1,2 Dichloroethane-D4 (SS)	85	% Recovery	1	NA		01/18/(1
X0127	XG.2001.69-1	NA	4-Bromofluorobenzene (SS)	96	% Recovery	1	NA		01/18/(1
X0127	XG.2001.69-1	NA	Dibromofluoromethane (SS)	98	% Recovery	1	NA		01/18/(1
X0127	XG.2001.69-1	NA	Toluene-D8 (SS)	100	% Recovery	1	NA		01/18/(1
X0127-011		**8260**							
X0127	XG.2001.80-1	NA	1,2 Dichloroethane-D4 (SS)	96	% Recovery	1	NA		01/22/(1
X0127	XG.2001.80-1	NA	4-Bromofluorobenzene (SS)	100	% Recovery	1	NA		01/22/(1
X0127	XG.2001.80-1	NA	Dibromofluoromethane (SS)	103	% Recovery	1	NA		01/22/(1
X0127	XG.2001.80-1	NA	Toluene-D8 (SS)	101	% Recovery	1	NA		01/22/(1
X0127-014		**8260**							
X0127	XG.2001.80-3	NA	1,2 Dichloroethane-D4 (SS)	95	% Recovery	1	NA		01/22/(1
X0127	XG.2001.80-3	NA	4-Bromofluorobenzene (SS)	97	% Recovery	1	NA		01/22/(1
X0127	XG.2001.80-3	NA	Dibromofluoromethane (SS)	102	% Recovery	1	NA		01/22/(1
X0127	XG.2001.80-3	NA	Toluene-D8 (SS)	102	% Recovery	1	NA		01/22/(1
X0127-016		**8260**							
X0127	XG.2001.117-1	NA	1,2 Dichloroethane-D4 (SS)	99	% Recovery	1	NA		01/2
X0127	XG.2001.117-1	NA	4-Bromofluorobenzene (SS)	98	% Recovery	1	NA		01/25/(1
X0127	XG.2001.117-1	NA	Dibromofluoromethane (SS)	102	% Recovery	1	NA		01/25/(1
X0127	XG.2001.117-1	NA	Toluene-D8 (SS)	103	% Recovery	1	NA		01/25/(1
X0127-019		**8260**							
X0127	XG.2001.124-1	NA	1,2 Dichloroethane-D4 (SS)	94	% Recovery	1	NA		01/29/(1
X0127	XG.2001.124-1	NA	4-Bromofluorobenzene (SS)	97	% Recovery	1	NA		01/29/(1
X0127	XG.2001.124-1	NA	Dibromofluoromethane (SS)	102	% Recovery	1	NA		01/29/(1
X0127	XG.2001.124-1	NA	Toluene-D8 (SS)	100	% Recovery	1	NA		01/29/(1
X0127-021		**8260**							
X0127	XG.2001.132-1	NA	1,2 Dichloroethane-D4 (SS)	89	% Recovery	1	NA		01/30/(1
X0127	XG.2001.132-1	NA	4-Bromofluorobenzene (SS)	98	% Recovery	1	NA		01/30/(1
X0127	XG.2001.132-1	NA	Dibromofluoromethane (SS)	101	% Recovery	1	NA		01/30/(1
X0127	XG.2001.132-1	NA	Toluene-D8 (SS)	100	% Recovery	1	NA		01/30/(1
X0127-024		**8260**							
X0127	XG.2001.157-2	NA	1,2 Dichloroethane-D4 (SS)	94	% Recovery	1	NA		02/01/(1
X0127	XG.2001.157-2	NA	4-Bromofluorobenzene (SS)	98	% Recovery	1	NA		02/01/(1
X0127	XG.2001.157-2	NA	Dibromofluoromethane (SS)	101	% Recovery	1	NA		02/01/(1
X0127	XG.2001.157-2	NA	Toluene-D8 (SS)	100	% Recovery	1	NA		02/01/(1
X0127-028		**8260**							
X0127	XG.2001.157-5	NA	1,2 Dichloroethane-D4 (SS)	97	% Recovery	1	NA		02/02/(1
X0127	XG.2001.157-5	NA	4-Bromofluorobenzene (SS)	98	% Recovery	1	NA		02/02/(1
X0127	XG.2001.157-5	NA	Dibromofluoromethane (SS)	101	% Recovery	1	NA		02/02/(1
X0127	XG.2001.157-5	NA	Toluene-D8 (SS)	102	% Recovery	1	NA		02/02

Surrogate Summary: QC

Client: **CH2MHILL**

ct: **0102072** **160660.02.FF.SA**

X0127-030		8260							
X0127	XG.2001.198-1	NA	1,2 Dichloroethane-D4 (SS)	91	% Recovery	1	NA		02/09/01
X0127	XG.2001.198-1	NA	4-Bromofluorobenzene (SS)	99	% Recovery	1	NA		02/09/01
X0127	XG.2001.198-1	NA	Dibromofluoromethane (SS)	98	% Recovery	1	NA		02/09/01
X0127	XG.2001.198-1	NA	Toluene-D8 (SS)	100	% Recovery	1	NA		02/09/01
X0127-039		8260							
X0127	XG.2001.198-9	NA	1,2 Dichloroethane-D4 (SS)	97	% Recovery	1	NA		02/13/01
X0127	XG.2001.198-9	NA	4-Bromofluorobenzene (SS)	101	% Recovery	1	NA		02/13/01
X0127	XG.2001.198-9	NA	Dibromofluoromethane (SS)	100	% Recovery	1	NA		02/13/01
X0127	XG.2001.198-9	NA	Toluene-D8 (SS)	100	% Recovery	1	NA		02/13/01
X0128-001		8270							
X0128	XG.2001.83-1	NA	*2,4,6-TRIBROMOPHENOL	97	% Recovery	1	NA		01/21/01
X0128	XG.2001.83-1	NA	*2-FLUOROBIPHENYL	89	% Recovery	1	NA		01/21/01
X0128	XG.2001.83-1	NA	*2-FLUOROPHENOL	76	% Recovery	1	NA		01/21/01
X0128	XG.2001.83-1	NA	*NITROBENZENE-D5	84	% Recovery	1	NA		01/21/01
X0128	XG.2001.83-1	NA	*PHENOL-D6	85	% Recovery	1	NA		01/21/01
X0128	XG.2001.83-1	NA	*TERPHENYL-D14	92	% Recovery	1	NA		01/21/01
X0128-014		8270							
X0128	XG.2001.162-1	NA	*2,4,6-TRIBROMOPHENOL	96	% Recovery	1	NA		02/05/01
X0128	XG.2001.162-1	NA	*2-FLUOROBIPHENYL	92	% Recovery	1	NA		02/05/01
X0128	XG.2001.162-1	NA	*2-FLUOROPHENOL	77	% Recovery	1	NA		02/05/01
X[illegible]	XG.2001.162-1	NA	*NITROBENZENE-D5	86	% Recovery	1	NA		02/05/01
	XG.2001.162-1	NA	*PHENOL-D6	89	% Recovery	1	NA		02/05/01
X0128	XG.2001.162-1	NA	*TERPHENYL-D14	92	% Recovery	1	NA		02/05/01
X0128-016		8270							
X0128	XG.2001.189-2	NA	*2,4,6-TRIBROMOPHENOL	92	% Recovery	1	NA		02/09/01
X0128	XG.2001.189-2	NA	*2-FLUOROBIPHENYL	86	% Recovery	1	NA		02/09/01
X0128	XG.2001.189-2	NA	*2-FLUOROPHENOL	74	% Recovery	1	NA		02/09/01
X0128	XG.2001.189-2	NA	*NITROBENZENE-D5	81	% Recovery	1	NA		02/09/01
X0128	XG.2001.189-2	NA	*PHENOL-D6	84	% Recovery	1	NA		02/09/01
X0128	XG.2001.189-2	NA	*TERPHENYL-D14	88	% Recovery	1	NA		02/09/01
X0128-018		8270							
X0128	XG.2001.201-1	NA	*2,4,6-TRIBROMOPHENOL	68	% Recovery	1	NA		02/13/01
X0128	XG.2001.201-1	NA	*2-FLUOROBIPHENYL	65	% Recovery	1	NA		02/13/01
X0128	XG.2001.201-1	NA	*2-FLUOROPHENOL	56	% Recovery	1	NA		02/13/01
X0128	XG.2001.201-1	NA	*NITROBENZENE-D5	62	% Recovery	1	NA		02/13/01
X0128	XG.2001.201-1	NA	*PHENOL-D6	63	% Recovery	1	NA		02/13/01
X0128	XG.2001.201-1	NA	*TERPHENYL-D14	90	% Recovery	1	NA		02/13/01
X0148-001		DRO							
X0148	XG.2001.169-1	NA	O-terphenyl	92	% Recovery	1	NA		02/07/01
X0148-003		DRO							
X0148	XG.2001.175-1	NA	O-terphenyl	92	% Recovery	1	NA		02/08/01
X0148-011		DRO							
X0148	XG.2001.182-1	NA	O-terphenyl	90	% Recovery	1	NA		02/09/01
[illegible]8-013		DRO							
[illegible]	XG.2001.194-1	NA	O-terphenyl	87	% Recovery	1	NA		02/14/01

Surrogate Summary: QC

Client: **CH2MHILL**

Project: **0102072** **160660.02.FF.SA**

RECEIVED FEB

X0148-017		DRO							
X0148	XG.2001.213-1	NA	O-terphenyl	88	% Recovery	1	NA		02/21/0
X0150-001		GRO							
X0150	XG.2001.174-1	NA	4-Bromofluorobenzene-FID	87	% Recovery	1	NA		02/07/0
X0150	XG.2001.174-1	NA	4-Bromofluorobenzene-PID	ND	% Recovery	1	NA		02/07/0
X0150	XG.2001.174-1	NA	aaa-Trifluorotoluene-FID	102	% Recovery	1	NA		02/07/0
X0150	XG.2001.174-1	NA	aaa-Trifluorotoluene-PID	ND	% Recovery	1	NA		02/07/0
X0150-008		GRO							
X0150	XG.2001.183-1	NA	4-Bromofluorobenzene-FID	87	% Recovery	1	NA		02/09/0
X0150	XG.2001.183-1	NA	4-Bromofluorobenzene-PID	ND	% Recovery	1	NA		02/09/0
X0150	XG.2001.183-1	NA	aaa-Trifluorotoluene-FID	105	% Recovery	1	NA		02/09/0
X0150	XG.2001.183-1	NA	aaa-Trifluorotoluene-PID	ND	% Recovery	1	NA		02/09/0
X0150-010		GRO							
X0150	XG.2001.192-1	NA	4-Bromofluorobenzene-FID	90	% Recovery	1	NA		02/13/0
X0150	XG.2001.192-1	NA	4-Bromofluorobenzene-PID	ND	% Recovery	1	NA		02/13/0
X0150	XG.2001.192-1	NA	aaa-Trifluorotoluene-FID	105	% Recovery	1	NA		02/13/0
X0150	XG.2001.192-1	NA	aaa-Trifluorotoluene-PID	ND	% Recovery	1	NA		02/13/0
X0150-014		GRO							
X0150	XG.2001.214-1	NA	4-Bromofluorobenzene-FID	88	% Recovery	1	NA		02/21/0
X0150	XG.2001.214-1	NA	4-Bromofluorobenzene-PID	28	% Recovery	1	NA		02/21/0
X0150	XG.2001.214-1	NA	aaa-Trifluorotoluene-FID	102	% Recovery	1	NA		02/21/0
X0150	XG.2001.214-1	NA	aaa-Trifluorotoluene-PID	17	% Recovery	1	NA		02/21

QC Type **MS** QC Matrix **SOLID**

QC Group	Run Sequence	CAS #	Analyte	Result	Units	Dilution Factor	Detection Limit	Code	Run Date
X0127-003		8260							
X0127	XG.2001.69-3	NA	1,2 Dichloroethane-D4 (SS)	93	% Recovery	1	NA		01/18/0
X0127	XG.2001.69-3	NA	4-Bromofluorobenzene (SS)	92	% Recovery	1	NA		01/18/0
X0127	XG.2001.69-3	NA	Dibromofluoromethane (SS)	103	% Recovery	1	NA		01/18/0
X0127	XG.2001.69-3	NA	Toluene-D8 (SS)	96	% Recovery	1	NA		01/18/0
X0128-005		8270							
X0128	XG.2001.92-2	NA	*2,4,6-TRIBROMOPHENOL	101	% Recovery	1	NA		01/22/0
X0128	XG.2001.92-2	NA	*2-FLUOROBIPHENYL	93	% Recovery	1	NA		01/22/0
X0128	XG.2001.92-2	NA	*2-FLUOROPHENOL	76	% Recovery	1	NA		01/22/0
X0128	XG.2001.92-2	NA	*NITROBENZENE-D5	89	% Recovery	1	NA		01/22/0
X0128	XG.2001.92-2	NA	*PHENOL-D6	86	% Recovery	1	NA		01/22/0
X0128	XG.2001.92-2	NA	*TERPHENYL-D14	96	% Recovery	1	NA		01/22/0
X0148-005		DRO							
X0148	XG.2001.169-5	NA	O-terphenyl	107	% Recovery	1	NA		02/07/0
X0150-006		GRO							
X0150	XG.2001.174-6	NA	4-Bromofluorobenzene-FID	114	% Recovery	1	NA		02/07/0
X0150	XG.2001.174-6	NA	4-Bromofluorobenzene-PID	ND	% Recovery	1	NA		02/07/
X0150	XG.2001.174-6	NA	aaa-Trifluorotoluene-FID	124	% Recovery	1	NA		02/07/

Surrogate Summary: QC

Client: **CH2MHILL**

Project: **0102072** **160660.02.FF.SA**

X0150	XG.2001.174-6	NA	aaa-Trifluorotoluene-PID	ND	% Recovery	1	NA		02/07/01

QC Type **MSD** QC Matrix **SOLID**

QC Group	Run Sequence	CAS #	Analyte	Result	Units	Dilution Factor	Detection Limit	Code	Run Date
X0127-004		8260							
X0127	XG.2001.69-4	NA	1,2 Dichloroethane-D4 (SS)	94	% Recovery	1	NA		01/18/01
X0127	XG.2001.69-4	NA	4-Bromofluorobenzene (SS)	93	% Recovery	1	NA		01/18/01
X0127	XG.2001.69-4	NA	Dibromofluoromethane (SS)	104	% Recovery	1	NA		01/18/01
X0127	XG.2001.69-4	NA	Toluene-D8 (SS)	96	% Recovery	1	NA		01/18/01
X0128-006		8270							
X0128	XG.2001.92-3	NA	*2,4,6-TRIBROMOPHENOL	96	% Recovery	1	NA		01/22/01
X0128	XG.2001.92-3	NA	*2-FLUOROBIPHENYL	85	% Recovery	1	NA		01/22/01
X0128	XG.2001.92-3	NA	*2-FLUOROPHENOL	67	% Recovery	1	NA		01/22/01
X0128	XG.2001.92-3	NA	*NITROBENZENE-D5	79	% Recovery	1	NA		01/22/01
X0128	XG.2001.92-3	NA	*PHENOL-D6	78	% Recovery	1	NA		01/22/01
X0128	XG.2001.92-3	NA	*TERPHENYL-D14	89	% Recovery	1	NA		01/22/01
X0148-006		DRO							
X0148	XG.2001.169-6	NA	O-terphenyl	108	% Recovery	1	NA		02/07/01
-007		GRO							
X0150	XG.2001.174-7	NA	4-Bromofluorobenzene-FID	113	% Recovery	1	NA		02/07/01
X0150	XG.2001.174-7	NA	4-Bromofluorobenzene-PID	ND	% Recovery	1	NA		02/07/01
X0150	XG.2001.174-7	NA	aaa-Trifluorotoluene-FID	125	% Recovery	1	NA		02/07/01
X0150	XG.2001.174-7	NA	aaa-Trifluorotoluene-PID	ND	% Recovery	1	NA		02/07/01

Assaigai Analytical Laboratories, Inc.

Surrogate Summary: Fraction

Client: **CH2MHILL**

Project: **0102072** **160660.02.FF.SA**

Client Sample ID **ST 106 SB31 120'** Sample Matrix **SOIL**

QC Group	Run Sequence	CAS #	Analyte	Result	Units	Dilution Factor	Detection Limit	Code	Run Date
0102072-01A		GRO							X0150-004
X0150	XG.2001.174-4	NA	4-Bromofluorobenzene-FID	89	% Recovery	1	NA		02/07/01
X0150	XG.2001.174-4	NA	4-Bromofluorobenzene-PID	ND	% Recovery	1	NA		02/07/01
X0150	XG.2001.174-4	NA	aaa-Trifluorotoluene-FID	104	% Recovery	1	NA		02/07/01
X0150	XG.2001.174-4	NA	aaa-Trifluorotoluene-PID	ND	% Recovery	1	NA		02/07/01
0102072-01B		DRO							X0148-009
X0148	XG.2001.175-2	NA	O-terphenyl	93	% Recovery	1	NA		02/08/01
0102072-01C		8260							X0127-037
X0127	XG.2001.198-8	NA	1,2 Dichloroethane-D4 (SS)	96	% Recovery	1	NA		02/09/01
X0127	XG.2001.198-8	NA	4-Bromofluorobenzene (SS)	98	% Recovery	1	NA		02/09/01
X0127	XG.2001.198-8	NA	Dibromofluoromethane (SS)	100	% Recovery	1	NA		02/09/01
X0127	XG.2001.198-8	NA	Toluene-D8 (SS)	102	% Recovery	1	NA		02/09/01

Client Sample ID **ST 106 SB31 130'** Sample Matrix **SOIL**

QC Group	Run Sequence	CAS #	Analyte	Result	Units	Dilution Factor	Detection Limit	Code	Run Date
0102072-02A		GRO							X0150-005
X0150	XG.2001.174-5	NA	4-Bromofluorobenzene-FID	109	% Recovery	1	NA		02/07/01
X0150	XG.2001.174-5	NA	4-Bromofluorobenzene-PID	ND	% Recovery	1	NA		02/07/01
X0150	XG.2001.174-5	NA	aaa-Trifluorotoluene-FID	124	% Recovery	1	NA		02/07/01
X0150	XG.2001.174-5	NA	aaa-Trifluorotoluene-PID	ND	% Recovery	1	NA		02/07/01
0102072-02B		DRO							X0148-010
X0148	XG.2001.175-3	NA	O-terphenyl	149	% Recovery	1	NA		02/08/01
0102072-02C		8260							X0127-035
X0127	XG.2001.198-6	NA	1,2 Dichloroethane-D4 (SS)	93	% Recovery	1	NA		02/09/01
X0127	XG.2001.198-6	NA	4-Bromofluorobenzene (SS)	98	% Recovery	1	NA		02/09/01
X0127	XG.2001.198-6	NA	Dibromofluoromethane (SS)	99	% Recovery	1	NA		02/09/01
X0127	XG.2001.198-6	NA	Toluene-D8 (SS)	101	% Recovery	1	NA		02/09/01
0102072-02D		8270							X0128-017
X0128	XG.2001.189-3	NA	*2,4,6-TRIBROMOPHENOL	105	% Recovery	1	NA		02/09/01
X0128	XG.2001.189-3	NA	*2-FLUOROBIPHENYL	97	% Recovery	1	NA		02/09/01
X0128	XG.2001.189-3	NA	*2-FLUOROPHENOL	77	% Recovery	1	NA		02/09/01
X0128	XG.2001.189-3	NA	*NITROBENZENE-D5	86	% Recovery	1	NA		02/09/01
X0128	XG.2001.189-3	NA	*PHENOL-D6	88	% Recovery	1	NA		02/09/01
X0128	XG.2001.189-3	NA	*TERPHENYL-D14	94	% Recovery	1	NA		02/09/01

Surrogate Summary: Fraction

Client: **CH2MHILL**

Project: **0102072** **160660.02.FF.SA**

Client Sample ID **ST 106 SB31 140'** Sample Matrix **SOIL**

QC Group	Run Sequence	CAS #	Analyte	Result	Units	Dilution Factor	Detection Limit	Code	Run Date
0102072-03A		**8260**							**X0127-036**
X0127	XG.2001.198-7	NA	1,2 Dichloroethane-D4 (SS)	97	% Recovery	1	NA		02/09/0
X0127	XG.2001.198-7	NA	4-Bromofluorobenzene (SS)	98	% Recovery	1	NA		02/09/0
X0127	XG.2001.198-7	NA	Dibromofluoromethane (SS)	100	% Recovery	1	NA		02/09/0
X0127	XG.2001.198-7	NA	Toluene-D8 (SS)	102	% Recovery	1	NA		02/09/0

AL GAI ANALYTICAL LABORATORIES, INC.

Chain of Custody Record

7300 JEFFERSON N.E.
ALBUQUERQUE, NEW MEXICO 871
(505) 345-8964

3332 WEDGEWOOD
EL PASO, TEXAS 79925
(915) 593-6000

127 EASTGATE DRIVE, 212-C
LOS ALAMOS, NEW MEXICO 87544
(505) 662-2558

Lab job No.: 0102072 Date 2-7

Page 1 of 1

Client: CH2M HILL

Address: 6001 INDIAN SCHOOL RD NE #350

City / State / Zip: ABQ NM 87110

Project Name / Number: KAFB/TO10/Bulkfuels

Contract / Purchase Order / Quote:

Project Manager / Contact: HALLORAN/LEFEVRE

Telephone No.: 884.5600

Fax No.: 883 7507

Samplers: (signature)

AAL Fraction Number	Field Sample Number / Location	Date	Time	Sample Type	Type / Size of Container	Preservation Temp.	Preservation Chemical	No. of Containers	418.1	DRO / GRO	VOC 8260	SVOC 8270							Remarks
	ST106 SB31 12.0'	2-7	1035	Soil	4oz	ICE	—	3	X	X	X								
	ST106 SB31 13.0'	2-7	1130	Soil	4oz	ICE	—	4	X	X	X	X							
	ST106 SB31 14.0'	2-7	1200	Soil	4oz	ICE	—	1			X								

Samples - W J LeFevre

RECEIVED FEB 26 2001

Relinquished by:	Date	Received by:	Relinquished by:	Date	Received by:
Signature: W J LeFevre	2-7-01	Signature: [illegible]	Signature:		Signature:
Printed: W J LEFEVRE	Time 13:08	Printed: Steven Crawford	Printed:	Time	Printed:
Company: CH2MHILL		Company: AAL	Company:		Company:
Reason: GROP@LAB		Reason: Analysis	Reason:		Reason:

Method of Shipment:

Shipment No.

Special Instructions:

Comments: *24 hr TAT on TPH*

After analysis, samples are to be:

- ☐ Disposed of (additional fee)
- ☐ Stored (30 days max)
- ☐ Stored over 30 days (additional fee)
- ☐ Returned to customer

COURIER

ASSAIGAI ANALYTICAL LABORATORIES, INC.
7300 Jefferson, NE • Albuquerque, New Mexico 87109 • (505) 345-8964 • FAX (505) 345-7259
3332 Wedgewood Dr., Suite N • El Paso, Texas 79925 • (915) 593-6000 • FAX (915) 593-7820
127 Eastgate Drive, 212-C • Los Alamos, New Mexico 87544 • (505) 662-255

RECEIVED FEB 12 2001

Explanation of codes

B	*analyte detected in Method Blank*
E	*result is estimated*
H	*analyzed out of hold time*
N	*tentatively identified compound*
S	*subcontracted*
1-9	*see footnote*

CH2MHILL
attn: **AMY HALLORAN**
6001 INDIAN SCHOOL RD NE STE 350
ALBUQUERQUE, NM 87110-4140

Assaigai Analytical Laboratories, Inc.

Certificate of Analysis

Client: **CH2MHILL**
Project: **0102071** **160660.02.FF.SA**

William P. Biava: President of Assaigai Analytical Laboratories, Inc.

Client Sample ID: ***ST106 SB31 140'*** Sample Matrix: ***SOIL*** Sample Collected: ***02/07/01 12:00:00***

QC Group	Run Sequence	CAS #	Analyte	Result	Units	Dilution Factor	Detection Limit	Code	Run Date
0102071-01A		**SW846 5030A/8015A GRO by GC/FID**							
X0114	XG.2001.168-5		Gasoline Range Organics	ND	mg / Kg	1	0.25		02/07/01
0102071-01A		**SW846 ME/8015A Diesel Range Organics by GC/FID**							
X0148	XG.2001.169-7		Diesel Range Organics	ND	mg / Kg	1	25		02/07/01

**** Sample specific Detection Limit is determined by multiplying the sample Dilution Factor by the listed Reporting Detection Limit. ****
**** ND = Not detected: less than the sample specific Detection Limit. Results relate only to the items tested. ****

Member
American Council of
Independent Laboratories, Inc.

REPRODUCTION OF THIS REPORT IN LESS THAN FULL REQUIRES THE WRITTEN CONSENT OF AAL.
THIS REPORT MAY NOT BE USED IN ANY MANNER BY THE CLIENT OR ANY OTHER THIRD PARTY TO CLAIM
PRODUCT ENDORSEMENT BY ANY ACCREDITATION PROGRAM.

Assaigai Analytical Laboratories, Inc.

Quality Control Summary

Client: CH2MHILL

ct: 0102071 160660.02.FF.SA

Explanation of codes

D	*Not applicable due to sample dilution*
L	*Not applicable due to MDL proximity*

QC Type **LCS: Lab Control Spike** QC Matrix **SOLID**

QC Group	Run Sequence	CAS #	Analyte	Result	Units	Dilution Factor	Detection Limit	Code	Run Date
X0114-002		**SW846 5030A/8015A GRO by GC/FID**							
X0114	XG.2001.43-2		Gasoline Range Organics	110	% Recovery	1	NA		01/09/01
X0148-002		**SW846 ME/8015A Diesel Range Organics by GC/FID**							
X0148	XG.2001.169-2		Diesel Range Organics	90	% Recovery	1	NA		02/07/01

QC Type **LCSD: Lab Control Spike Duplicate Accuracy** QC Matrix **SOLID**

QC Group	Run Sequence	CAS #	Analyte	Result	Units	Dilution Factor	Detection Limit	Code	Run Date
X0114-003		**SW846 5030A/8015A GRO by GC/FID**							
X0114	XG.2001.43-3		Gasoline Range Organics	106	% Recovery	1	NA		01/09/01
X0148-003		**SW846 ME/8015A Diesel Range Organics by GC/FID**							
X0148	XG.2001.169-3		Diesel Range Organics	91	% Recovery	1	NA		02/07/01

Type **LCSD: Lab Control Spike Duplicate Precision** QC Matrix **SOLID**

QC Group	Run Sequence	CAS #	Analyte	Result	Units	Dilution Factor	Detection Limit	Code	Run Date
X0114-003		**SW846 5030A/8015A GRO by GC/FID**							
X0114	XG.2001.43-3		Gasoline Range Organics	4	RPD	1	NA		01/09/01
X0148-003		**SW846 ME/8015A Diesel Range Organics by GC/FID**							
X0148	XG.2001.169-3		Diesel Range Organics	1	RPD	1	NA		02/07/01

QC Type **MB: Method Blank** QC Matrix **SOLID**

QC Group	Run Sequence	CAS #	Analyte	Result	Units	Dilution Factor	Detection Limit	Code	Run Date
X0114-001		**SW846 5030A/8015A GRO by GC/FID**							
X0114	XG.2001.43-1		Gasoline Range Organics	ND	mg / Kg	1	0.25		01/09/01
X0114-010		**SW846 5030A/8015A GRO by GC/FID**							
X0114	XG.2001.56-1		Gasoline Range Organics	ND	mg / Kg	1	0.25		01/10/01
X0114-014		**SW846 5030A/8015A GRO by GC/FID**							
X0114	XG.2001.120-1		Gasoline Range Organics	ND	mg / Kg	1	0.25		01/26/01
X0114-018		**SW846 5030A/8015A GRO by GC/FID**							
X[illegible]	XG.2001.129-1		Gasoline Range Organics	ND	mg / Kg	1	0.25		01/30/01

Quality Control Summary

Client: **CH2MHILL**

Project: **0102071** **160660.02.FF.SA**

Explanation of codes	
D	*Not applicable due to sample dilu*
L	*Not applicable due to MDL proxim*

X0114-026		**SW846 5030A/8015A GRO by GC/FID**							
X0114	XG.2001.149-1		Gasoline Range Organics	ND	mg / Kg	1	0.25		02/01/01
X0114-029		**SW846 5030A/8015A GRO by GC/FID**							
X0114	XG.2001.168-1		Gasoline Range Organics	ND	mg / Kg	1	0.25		02/07/01
X0148-001		**SW846 ME/8015A Diesel Range Organics by GC/FID**							
X0148	XG.2001.169-1		Diesel Range Organics	ND	mg / Kg	1	25		02/07/0
X0148-008		**SW846 ME/8015A Diesel Range Organics by GC/FID**							
X0148	XG.2001.175-1		Diesel Range Organics	ND	mg / Kg	1	25		02/08/0

QC Type **MS: Matrix Spike** QC Matrix **SOLID**

QC Group	Run Sequence	CAS #	Analyte	Result	Units	Dilution Factor	Detection Limit	Code	Run Date
X0114-012		**SW846 5030A/8015A GRO by GC/FID**							
X0114	XG.2001.56-3		Gasoline Range Organics	112	% Recovery	10	NA		01/10/01
X0148-005		**SW846 ME/8015A Diesel Range Organics by GC/FID**							
X0148	XG.2001.169-5		Diesel Range Organics	99	% Recovery	1	NA		02/07/01

QC Type **MSD: Matrix Spike Duplicate Accuracy** QC Matrix **SOLID**

QC Group	Run Sequence	CAS #	Analyte	Result	Units	Dilution Factor	Detection Limit	Code	Run Date
X0114-013		**SW846 5030A/8015A GRO by GC/FID**							
X0114	XG.2001.56-4		Gasoline Range Organics	112	% Recovery	10	NA		01/10/01
X0148-006		**SW846 ME/8015A Diesel Range Organics by GC/FID**							
X0148	XG.2001.169-6		Diesel Range Organics	96	% Recovery	1	NA		02/07/01

QC Type **MSD: Matrix Spike Duplicate Precision** QC Matrix **SOLID**

QC Group	Run Sequence	CAS #	Analyte	Result	Units	Dilution Factor	Detection Limit	Code	Run Date
X0114-013		**SW846 5030A/8015A GRO by GC/FID**							
X0114	XG.2001.56-4		Gasoline Range Organics	< 1	RPD	10	NA		01/10/01
X0148-006		**SW846 ME/8015A Diesel Range Organics by GC/FID**							
X0148	XG.2001.169-6		Diesel Range Organics	3	RPD	1	NA		02/07/01

Surrogate Summary: QC

Client: **CH2MHILL**

Project: **0102071** **160660.02.FF.SA**

X0148-006		DRO							
X0148	XG.2001.169-6	NA	O-terphenyl	108	% Recovery	1	NA		02/07/01

Surrogate Summary: QC

Client: **CH2MHILL**

Project: **0102071** **160660.02.FF.SA**

QC Type **LCS** QC Matrix **SOLID**

QC Group	Run Sequence	CAS #	Analyte	Result	Units	Dilution Factor	Detection Limit	Code	Run Date
X0114-002		GRO							
X0114	XG.2001.43-2	NA	4-Bromofluorobenzene-FID	106	% Recovery	1	NA		01/09/01
X0114	XG.2001.43-2	NA	4-Bromofluorobenzene-PID	ND	% Recovery	1	NA		01/09/01
X0114	XG.2001.43-2	NA	aaa-Trifluorotoluene-FID	105	% Recovery	1	NA		01/09/01
X0114	XG.2001.43-2	NA	aaa-Trifluorotoluene-PID	ND	% Recovery	1	NA		01/09/01
X0148-002		DRO							
X0148	XG.2001.169-2	NA	O-terphenyl	102	% Recovery	1	NA		02/07/01

QC Type **LCSD** QC Matrix **SOLID**

QC Group	Run Sequence	CAS #	Analyte	Result	Units	Dilution Factor	Detection Limit	Code	Run Date
X0114-003		GRO							
X0114	XG.2001.43-3	NA	4-Bromofluorobenzene-FID	106	% Recovery	1	NA		01/09/01
X0114	XG.2001.43-3	NA	4-Bromofluorobenzene-PID	ND	% Recovery	1	NA		01/09/0
X0114	XG.2001.43-3	NA	aaa-Trifluorotoluene-FID	105	% Recovery	1	NA		01/09/
X0114	XG.2001.43-3	NA	aaa-Trifluorotoluene-PID	ND	% Recovery	1	NA		01/09/01
X0148-003		DRO							
X0148	XG.2001.169-3	NA	O-terphenyl	104	% Recovery	1	NA		02/07/01

QC Type **MB** QC Matrix **SOLID**

QC Group	Run Sequence	CAS #	Analyte	Result	Units	Dilution Factor	Detection Limit	Code	Run Date
X0114-001		GRO							
X0114	XG.2001.43-1	NA	4-Bromofluorobenzene-FID	93	% Recovery	1	NA		01/09/01
X0114	XG.2001.43-1	NA	4-Bromofluorobenzene-PID	ND	% Recovery	1	NA		01/09/01
X0114	XG.2001.43-1	NA	aaa-Trifluorotoluene-FID	104	% Recovery	1	NA		01/09/01
X0114	XG.2001.43-1	NA	aaa-Trifluorotoluene-PID	ND	% Recovery	1	NA		01/09/01
X0114-010		GRO							
X0114	XG.2001.56-1	NA	4-Bromofluorobenzene-FID	92	% Recovery	1	NA		01/10/01
X0114	XG.2001.56-1	NA	4-Bromofluorobenzene-PID	ND	% Recovery	1	NA		01/10/01
X0114	XG.2001.56-1	NA	aaa-Trifluorotoluene-FID	102	% Recovery	1	NA		01/10/01
X0114	XG.2001.56-1	NA	aaa-Trifluorotoluene-PID	ND	% Recovery	1	NA		01/10/01
X0114-014		GRO							
X0114	XG.2001.120-1	NA	4-Bromofluorobenzene-FID	93	% Recovery	1	NA		01/26/01
X0114	XG.2001.120-1	NA	4-Bromofluorobenzene-PID	ND	% Recovery	1	NA		01/26/01
X0114	XG.2001.120-1	NA	aaa-Trifluorotoluene-FID	102	% Recovery	1	NA		01/26/

RECEIVED FEB 1 0 2001

ASSAIGAI
ANALYTICAL
LABORATORIES, INC.
7300 Jefferson, NE • Albuquerque, New Mexico 87109 • (505) 345-8964 • FAX (505) 345-7259
3332 Wedgewood Dr., Suite N • El Paso, Texas 79925 • (915) 593-6000 • FAX (915) 593-7820
127 Eastgate Drive, 212-C • Los Alamos, New Mexico 87544 • (505) 662-2555

Explanation of codes

B	*analyte detected in Method Blank*
E	*result is estimated*
H	*analyzed out of hold time*
N	*tentatively identified compound*
S	*subcontracted*
1-9	*see footnote*

CH2MHILL
attn: **AMY HALLORAN**
6001 INDIAN SCHOOL RD NE STE 350
ALBUQUERQUE, NM 87110-4140

Assaigai Analytical Laboratories, Inc.

Certificate of Analysis

Client: **CH2MHILL**
Project: **0102106** **160660.02.FF.SA**

William P. Biava: President of Assaigai Analytical Laboratories, Inc.

Client Sample ID ***ST106 SB31 150'*** Sample Matrix ***SOIL*** Sample Collected ***02/07/01 13:45:00***

Group	Run Sequence	CAS #	Analyte	Result	Units	Dilution Factor	Detection Limit	Code	Run Date
0102106-01A		**SW846 5030A/8015A GRO by GC/FID**							
X0150	XG.2001.183-2		Gasoline Range Organics	ND	mg / Kg	1	0.25		02/09/01
0102106-01A		**SW846 ME/8015A Diesel Range Organics by GC/FID**							
X0148	XG.2001.182-2		Diesel Range Organics	ND	mg / Kg	1	25		02/09/01

**** Sample specific Detection Limit is determined by multiplying the sample Dilution Factor by the listed Reporting Detection Limit. ****
**** ND = Not detected: less than the sample specific Detection Limit. Results relate only to the items tested. ****

Member
American Council of
Independent Laboratories, Inc.

REPRODUCTION OF THIS REPORT IN LESS THAN FULL REQUIRES THE WRITTEN CONSENT OF AAL.
THIS REPORT MAY NOT BE USED IN ANY MANNER BY THE CLIENT OR ANY OTHER THIRD PARTY TO CLAIM
PROGRAM ENDORSEMENT BY ANY ACCREDITATION PROGRAM

ASSAIGAI ANALYTICAL LABORATORIES, INC.

Chain of Custody Record

7300 JEFFERSON N.E.
ALBUQUERQUE, NEW MEXICO 87109
(505) 345-8964

3332 WEDGEWOOD
EL PASO, TEXAS 79925
(915) 593-6000

127 EASTGATE DRIVE, 212-C
LOS ALAMOS, NEW MEXICO 87544
(505) 662-2558

Lab Job No.: 0102071 Date: 2-7

Page 1 of 1

Client: CH2M HILL

Address: 6001 INDIAN SCHOOL RD

City / State / Zip: ABQ NM 87110

Project Name / Number: KAFB/TO10/Bulk fuel

Contract / Purchase Order / Quote:

Project Manager / Contact: HALLORAN/LEFEVRE

Telephone No.: 884-5600

Fax No.: 883-7507

Samplers: (signature)

AAL Fraction Number	Field Sample Number / Location	Date	Time	Sample Type	Type / Size of Container	Preservation Temp.	Preservation Chemical	No. of Containers	PRO	GRO									Remarks
1A	STOK SB31 140'	2-7	1200	Soil	4oz	ICE	—	2	X	X									SAME DAY TAT

Relinquished by:	Date	Received by:	Relinquished by:	Date	Received by:
Signature:	2-7-01	Signature:	Signature:		Signature:
Printed: WAYNE LEFEVRE	Time: 12:54pm	Printed: Steven Cornwell	Printed:	Time	Printed:
Company: CH2M HILL		Company: AAL	Company:		Company:
Reason: PROP @ LAB		Reason: Analysis	Reason:		Reason:

Method of Shipment:

Shipment No.

Special Instructions:

Comments: * TAT 2-7-01 *

After analysis, samples are to be:

- ☐ Disposed of (additional fee)
- ☐ Stored (30 days max)
- ☐ Stored over 30 days (additional fee)
- ☐ Returned to customer

Surrogate Summary: Fraction

Client: **CH2MHILL**

ɜct: **0102071** **160660.02.FF.SA**

Client Sample ID **ST106 SB31 140'** Sample Matrix **SOIL**

QC Group	Run Sequence	CAS #	Analyte	Result	Units	Dilution Factor	Detection Limit	Code	Run Date
0102071-01A		**GRO**							**X0114-033**
X0114	XG.2001.168-5	NA	4-Bromofluorobenzene-FID	86	% Recovery	1	NA		02/07/01
X0114	XG.2001.168-5	NA	4-Bromofluorobenzene-PID	ND	% Recovery	1	NA		02/07/01
X0114	XG.2001.168-5	NA	aaa-Trifluorotoluene-FID	104	% Recovery	1	NA		02/07/01
X0114	XG.2001.168-5	NA	aaa-Trifluorotoluene-PID	ND	% Recovery	1	NA		02/07/01
0102071-01A		**DRO**							**X0148-007**
X0148	XG.2001.169-7	NA	O-terphenyl	92	% Recovery	1	NA		02/07/01

Surrogate Summary: Fraction

Client: **CH2MHILL**

Project: **0102106** **160660.02.FF.SA**

Client Sample ID **ST106 SB31 150'** Sample Matrix **SOIL**

QC Group	Run Sequence	CAS #	Analyte	Result	Units	Dilution Factor	Detection Limit	Code	Run Date
0102106-01A		DRO							X0148-012
X0148	XG.2001.182-2	NA	O-terphenyl	91	% Recovery	1	NA		02/09/01
0102106-01A		GRO							X0150-009
X0150	XG.2001.183-2	NA	4-Bromofluorobenzene-FID	88	% Recovery	1	NA		02/09/01
X0150	XG.2001.183-2	NA	4-Bromofluorobenzene-PID	ND	% Recovery	1	NA		02/09/01
X0150	XG.2001.183-2	NA	aaa-Trifluorotoluene-FID	102	% Recovery	1	NA		02/09/01
X0150	XG.2001.183-2	NA	aaa-Trifluorotoluene-PID	ND	% Recovery	1	NA		02/09/01

Assaigai Analytical Laboratories, Inc.

Surrogate Summary: QC

Client: **CH2MHILL**

ct: **0102106** **160660.02.FF.SA**

QC Type **LCS** QC Matrix **SOLID**

QC Group	Run Sequence	CAS #	Analyte	Result	Units	Dilution Factor	Detection Limit	Code	Run Date
X0148-002		DRO							
X0148	XG.2001.169-2	NA	O-terphenyl	102	% Recovery	1	NA		02/07/01

QC Type **LCSD** QC Matrix **SOLID**

QC Group	Run Sequence	CAS #	Analyte	Result	Units	Dilution Factor	Detection Limit	Code	Run Date
X0148-003		DRO							
X0148	XG.2001.169-3	NA	O-terphenyl	104	% Recovery	1	NA		02/07/01
X0150-003		GRO							
X0150	XG.2001.174-3	NA	4-Bromofluorobenzene-FID	100	% Recovery	1	NA		02/07/01
X0150	XG.2001.174-3	NA	4-Bromofluorobenzene-PID	ND	% Recovery	1	NA		02/07/01
X0150	XG.2001.174-3	NA	aaa-Trifluorotoluene-FID	107	% Recovery	1	NA		02/07/01
X0150	XG.2001.174-3	NA	aaa-Trifluorotoluene-PID	ND	% Recovery	1	NA		02/07/01

QC Type **MB** QC Matrix **SOLID**

QC Group	Run Sequence	CAS #	Analyte	Result	Units	Dilution Factor	Detection Limit	Code	Run Date
X0148-001		DRO							
X0148	XG.2001.169-1	NA	O-terphenyl	92	% Recovery	1	NA		02/07/01
X0148-008		DRO							
X0148	XG.2001.175-1	NA	O-terphenyl	92	% Recovery	1	NA		02/08/01
X0148-011		DRO							
X0148	XG.2001.182-1	NA	O-terphenyl	90	% Recovery	1	NA		02/09/01
X0150-001		GRO							
X0150	XG.2001.174-1	NA	4-Bromofluorobenzene-FID	87	% Recovery	1	NA		02/07/01
X0150	XG.2001.174-1	NA	4-Bromofluorobenzene-PID	ND	% Recovery	1	NA		02/07/01
X0150	XG.2001.174-1	NA	aaa-Trifluorotoluene-FID	102	% Recovery	1	NA		02/07/01
X0150	XG.2001.174-1	NA	aaa-Trifluorotoluene-PID	ND	% Recovery	1	NA		02/07/01
X0150-008		GRO							
X0150	XG.2001.183-1	NA	4-Bromofluorobenzene-FID	87	% Recovery	1	NA		02/09/01
X0150	XG.2001.183-1	NA	4-Bromofluorobenzene-PID	ND	% Recovery	1	NA		02/09/01
X0150	XG.2001.183-1	NA	aaa-Trifluorotoluene-FID	105	% Recovery	1	NA		02/09/01
X0150	XG.2001.183-1	NA	aaa-Trifluorotoluene-PID	ND	% Recovery	1	NA		02/09/01

Surrogate Summary: QC

Client: **CH2MHILL**

Project: **0102106** **160660.02.FF.SA**

QC Type **MS** QC Matrix **SOLID**

QC Group	Run Sequence	CAS #	Analyte	Result	Units	Dilution Factor	Detection Limit	Code	Run Date
X0148-005		DRO							
X0148	XG.2001.169-5	NA	O-terphenyl	107	% Recovery	1	NA		02/07/01
X0150-006		GRO							
X0150	XG.2001.174-6	NA	4-Bromofluorobenzene-FID	114	% Recovery	1	NA		02/07/01
X0150	XG.2001.174-6	NA	4-Bromofluorobenzene-PID	ND	% Recovery	1	NA		02/07/01
X0150	XG.2001.174-6	NA	aaa-Trifluorotoluene-FID	124	% Recovery	1	NA		02/07/01
X0150	XG.2001.174-6	NA	aaa-Trifluorotoluene-PID	ND	% Recovery	1	NA		02/07/01

QC Type **MSD** QC Matrix **SOLID**

QC Group	Run Sequence	CAS #	Analyte	Result	Units	Dilution Factor	Detection Limit	Code	Run Date
X0148-006		DRO							
X0148	XG.2001.169-6	NA	O-terphenyl	108	% Recovery	1	NA		02/07/01
X0150-007		GRO							
X0150	XG.2001.174-7	NA	4-Bromofluorobenzene-FID	113	% Recovery	1	NA		02/07/01
X0150	XG.2001.174-7	NA	4-Bromofluorobenzene-PID	ND	% Recovery	1	NA		02/07/01
X0150	XG.2001.174-7	NA	aaa-Trifluorotoluene-FID	125	% Recovery	1	NA		02/07/01
X0150	XG.2001.174-7	NA	aaa-Trifluorotoluene-PID	ND	% Recovery	1	NA		02/07/01

Assaigai Analytical Laboratories, Inc.

Quality Control Summary

Client: **CH2MHILL**

ect: **0102106** **160660.02.FF.SA**

Explanation of codes

D	*Not applicable due to sample dilution*
L	*Not applicable due to MDL proximity*

QC Type **LCS: Lab Control Spike** QC Matrix **SOLID**

QC Group	Run Sequence	CAS #	Analyte	Result	Units	Dilution Factor	Detection Limit	Code	Run Date
X0148-002		**SW846 ME/8015A Diesel Range Organics by GC/FID**							
X0148	XG.2001.169-2		Diesel Range Organics	90	% Recovery	1	NA		02/07/01

QC Type **LCSD: Lab Control Spike Duplicate Accuracy** QC Matrix **SOLID**

QC Group	Run Sequence	CAS #	Analyte	Result	Units	Dilution Factor	Detection Limit	Code	Run Date
X0148-003		**SW846 ME/8015A Diesel Range Organics by GC/FID**							
X0148	XG.2001.169-3		Diesel Range Organics	91	% Recovery	1	NA		02/07/01
X0150-003		**SW846 5030A/8015A GRO by GC/FID**							
X0150	XG.2001.174-3		Gasoline Range Organics	92	% Recovery	1	NA		02/07/01

QC Type **LCSD: Lab Control Spike Duplicate Precision** QC Matrix **SOLID**

roup	Run Sequence	CAS #	Analyte	Result	Units	Dilution Factor	Detection Limit	Code	Run Date
X0148-003		**SW846 ME/8015A Diesel Range Organics by GC/FID**							
X0148	XG.2001.169-3		Diesel Range Organics	1	RPD	1	NA		02/07/01
X0150-003		**SW846 5030A/8015A GRO by GC/FID**							
X0150	XG.2001.174-3		Gasoline Range Organics	7	RPD	1	NA		02/07/01

QC Type **MB: Method Blank** QC Matrix **SOLID**

QC Group	Run Sequence	CAS #	Analyte	Result	Units	Dilution Factor	Detection Limit	Code	Run Date
X0148-001		**SW846 ME/8015A Diesel Range Organics by GC/FID**							
X0148	XG.2001.169-1		Diesel Range Organics	ND	mg / Kg	1	25		02/07/01
X0148-008		**SW846 ME/8015A Diesel Range Organics by GC/FID**							
X0148	XG.2001.175-1		Diesel Range Organics	ND	mg / Kg	1	25		02/08/01
X0148-011		**SW846 ME/8015A Diesel Range Organics by GC/FID**							
X0148	XG.2001.182-1		Diesel Range Organics	ND	mg / Kg	1	25		02/09/01
X0150-001		**SW846 5030A/8015A GRO by GC/FID**							
X0150	XG.2001.174-1		Gasoline Range Organics	ND	mg / Kg	1	0.25		02/07/01
X0150-008		**SW846 5030A/8015A GRO by GC/FID**							
X0150	XG.2001.183-1		Gasoline Range Organics	ND	mg / Kg	1	0.25		02/09/01

Assaigai Analytical Laboratories, Inc.

Quality Control Summary

Client: **CH2MHILL**

Project: **0102106** **160660.02.FF.SA**

Explanation of codes

D	*Not applicable due to sample dilutio*
L	*Not applicable due to MDL proxim*

QC Type **MS: Matrix Spike** QC Matrix **SOLID**

QC Group	Run Sequence	CAS #	Analyte	Result	Units	Dilution Factor	Detection Limit	Code	Run Date
X0148-005		**SW846 ME/8015A Diesel Range Organics by GC/FID**							
X0148	XG.2001.169-5		Diesel Range Organics	99	% Recovery	1	NA		02/07/01
X0150-006		**SW846 5030A/8015A GRO by GC/FID**							
X0150	XG.2001.174-6		Gasoline Range Organics	94	% Recovery	1	NA		02/07/01

QC Type **MSD: Matrix Spike Duplicate Accuracy** QC Matrix **SOLID**

QC Group	Run Sequence	CAS #	Analyte	Result	Units	Dilution Factor	Detection Limit	Code	Run Date
X0148-006		**SW846 ME/8015A Diesel Range Organics by GC/FID**							
X0148	XG.2001.169-6		Diesel Range Organics	96	% Recovery	1	NA		02/07/01
X0150-007		**SW846 5030A/8015A GRO by GC/FID**							
X0150	XG.2001.174-7		Gasoline Range Organics	92	% Recovery	1	NA		02/07/01

QC Type **MSD: Matrix Spike Duplicate Precision** QC Matrix **SOLID**

QC Group	Run Sequence	CAS #	Analyte	Result	Units	Dilution Factor	Detection Limit	Code	Run Date
X0148-006		**SW846 ME/8015A Diesel Range Organics by GC/FID**							
X0148	XG.2001.169-6		Diesel Range Organics	3	RPD	1	NA		02/07/01
X0150-007		**SW846 5030A/8015A GRO by GC/FID**							
X0150	XG.2001.174-7		Gasoline Range Organics	3	RPD	1	NA		02/07/01

A[illegible]IGAI ANALYTICAL LABORATORIES, INC.

Chain of Cust[illegible]dy Record

7300 JEFFERSON N.E.
ALBUQUERQUE, NEW MEXICO 871
(505) 345-8964

3332 WENGEWOOD
EL PASO, TEXAS 79925
(915) 593-6000

127 EASTGATE DRIVE, 212-C
LOS ALAMOS, NEW MEXICO 87544
(505) 662-2558

Lab Job No. 0102/06 Date 2-9-1

Page 1 of 1

Client CH2M HILL / ABQ

Address 6301 [illegible] #350

City / State / Zip [illegible] NM 87110

Project Name / Number KAFB / TD10 / Bulk[illegible]

Contract / Purchase Order / Quote

Project Manager / Contact HALLORAN LEFEVRE

Telephone No. 884 5600

Fax No. 913 7507

Samplers : (signature) [illegible]

Analysis Required

AAL Fraction Number	Field Sample Number / Location	Date	Time	Sample Type	Type / Size of Container	Preservation Temp.	Preservation Chemical	No. of Containers	TPH 418.1	GRO / DRO									Remarks
	TD6 SB31 150'	2-7	1345	SS1	4oz	ICE	—	2	X	X									Bill provide / [illegible]

Relinquished by:
Signature [illegible]
Printed WM J LEFEVRE
Company CH2M HILL
Reason DROP @ LAB
Date 2-9-1
Time 1750

Received by:
Signature Wm. P. Biava
Printed Wm. P. Biava
Company AAL
Reason Analysis

Relinquished by:
Signature
Printed
Company
Reason
Date
Time

Received by:
Signature
Printed
Company
Reason

Method of Shipment:
Shipment No.
Special Instructions:

Comments: 24hr TAT

After analysis, samples are to be:
- ☐ Disposed of (additional fee)
- ☐ Stored (30 days max)
- ☐ Stored over 30 days (additional fee)
- ☐ Returned to customer

COURIER

ASSAIGAI
ANALYTICAL
LABORATORIES, INC.
7300 Jefferson, NE • Albuquerque, New Mexico 87109 • (505) 345-8964 • FAX (505) 345-7259
3332 Wedgewood Dr., Suite N • El Paso, Texas 79925 • (915) 593-6000 • FAX (915) 593-7820
127 Eastgate Drive, 212-C • Los Alamos, New Mexico 87544 • (505) 662-2558

Explanation of codes

B	*analyte detected in Method Blank*
E	*result is estimated*
H	*analyzed out of hold time*
N	*tentatively identified compound*
S	*subcontracted*
1-9	*see footnote*

CH2MHILL
attn: **AMY HALLORAN**
6001 INDIAN SCHOOL RD NE STE 350
ALBUQUERQUE, NM 87110-4140

Assaigai Analytical Laboratories, Inc.

Certificate of Analysis

Client: **CH2MHILL**
Project: **0103101** **160660.02.FF.SA**

William P. Biava: President of Assaigai Analytical Laboratories, Inc.

Client Sample ID ***ST 106 SB32 130'*** Sample Matrix ***SOIL*** Sample Collected ***03/05/01 13:40:00***

QC Group	Run Sequence	CAS #	Analyte	Result	Units	Dilution Factor	Detection Limit	Code	Run Date
0103101-01A		**SW846 5030A/8015A GRO by GC/FID**							
X0182	XG.2001.271-4		Gasoline Range Organics	ND	mg / Kg	1	0.25		03/07/01
0103101-01B		**SW846 ME/8015A Diesel Range Organics by GC/FID**							
X0183	XG.2001.276-4		Diesel Range Organics	ND	mg / Kg	1	25		03/08/01

Client Sample ID ***ST 106 SB32 270'*** Sample Matrix ***SOIL*** Sample Collected ***03/06/01 12:50:00***

QC Group	Run Sequence	CAS #	Analyte	Result	Units	Dilution Factor	Detection Limit	Code	Run Date
0103101-02A		**SW846 5030A/8015A GRO by GC/FID**							
X0182	XG.2001.271-5		Gasoline Range Organics	ND	mg / Kg	1	0.25		03/08/01
0103101-02B		**SW846 ME/8015A Diesel Range Organics by GC/FID**							
X0183	XG.2001.276-6		Diesel Range Organics	ND	mg / Kg	1	25		03/08/01

Member:
American Council of
Independent Laboratories, Inc.

REPRODUCTION OF THIS REPORT IN LESS THAN FULL REQUIRES THE WRITTEN CONSENT OF AAL.
THIS REPORT MAY NOT BE USED IN ANY MANNER BY THE CLIENT OR ANY OTHER THIRD PARTY TO CLAIM
PRODUCT ENDORSEMENT BY ANY ACCREDITATION PROGRAM.

Certificate of Analysis

Client: **CH2MHILL**

Project: **0103101** **160660.02.FF.SA**

**** Sample specific Detection Limit is determined by multiplying the sample Dilution Factor by the listed Reporting Detection Limit. ****

**** ND = Not detected: less than the sample specific Detection Limit. Results relate only to the items tested. ****

Assaigai Analytical Laboratories, Inc.

Quality Control Summary

Client: CH2MHILL

Project: 0103101 160660.02.FF.SA

Explanation of codes	
D	*Not applicable due to sample dilution*
L	*Not applicable due to MDL proximity*

QC Type: LCS: Lab Control Spike — QC Matrix: SOLID

QC Group	Run Sequence	CAS #	Analyte	Result	Units	Dilution Factor	Detection Limit	Code	Run Date
X0182-002		**SW846 5030A/8015A GRO by GC/FID**							
X0182	XG.2001.271-2		Gasoline Range Organics	114	% Recovery	1	NA		03/07/01
X0183-002		**SW846 ME/8015A Diesel Range Organics by GC/FID**							
X0183	XG.2001.276-2		Diesel Range Organics	90	% Recovery	1	NA		03/08/01

QC Type: LCSD: Lab Control Spike Duplicate Accuracy — QC Matrix: SOLID

QC Group	Run Sequence	CAS #	Analyte	Result	Units	Dilution Factor	Detection Limit	Code	Run Date
X0182-003		**SW846 5030A/8015A GRO by GC/FID**							
X0182	XG.2001.271-3		Gasoline Range Organics	104	% Recovery	1	NA		03/07/01
X0183-003		**SW846 ME/8015A Diesel Range Organics by GC/FID**							
X0183	XG.2001.276-3		Diesel Range Organics	86	% Recovery	1	NA		03/08/01

Type: LCSD: Lab Control Spike Duplicate Precision — QC Matrix: SOLID

QC Group	Run Sequence	CAS #	Analyte	Result	Units	Dilution Factor	Detection Limit	Code	Run Date
X0182-003		**SW846 5030A/8015A GRO by GC/FID**							
X0182	XG.2001.271-3		Gasoline Range Organics	9	RPD	1	NA		03/07/01
X0183-003		**SW846 ME/8015A Diesel Range Organics by GC/FID**							
X0183	XG.2001.276-3		Diesel Range Organics	5	RPD	1	NA		03/08/01

QC Type: MB: Method Blank — QC Matrix: SOLID

QC Group	Run Sequence	CAS #	Analyte	Result	Units	Dilution Factor	Detection Limit	Code	Run Date
X0182-001		**SW846 5030A/8015A GRO by GC/FID**							
X0182	XG.2001.271-1		Gasoline Range Organics	ND	mg / Kg	1	0.25		03/07/01
X0183-001		**SW846 ME/8015A Diesel Range Organics by GC/FID**							
X0183	XG.2001.276-1		Diesel Range Organics	ND	mg / Kg	1	25		03/08/01

Assaigai Analytical Laboratories, Inc.

Quality Control Summary

Client: **CH2MHILL**

Project: **0103101** **160660.02.FF.SA**

Explanation of codes	
D	*Not applicable due to sample dilutio*
L	*Not applicable due to MDL proxim*

QC Type **MS: Matrix Spike** QC Matrix **SOLID**

QC Group	Run Sequence	CAS #	Analyte	Result	Units	Dilution Factor	Detection Limit	Code	Run Date
X0182-006		**SW846 5030A/8015A GRO by GC/FID**							
X0182	XG.2001.271-6		Gasoline Range Organics	94	% Recovery	1	NA		03/08/0
X0183-012		**SW846 ME/8015A Diesel Range Organics by GC/FID**							
X0183	XG.2001.276-11		Diesel Range Organics	87	% Recovery	1	NA		03/08/0

QC Type **MSD: Matrix Spike Duplicate Accuracy** QC Matrix **SOLID**

QC Group	Run Sequence	CAS #	Analyte	Result	Units	Dilution Factor	Detection Limit	Code	Run Date
X0182-007		**SW846 5030A/8015A GRO by GC/FID**							
X0182	XG.2001.271-7		Gasoline Range Organics	106	% Recovery	1	NA		03/08/01
X0183-006		**SW846 ME/8015A Diesel Range Organics by GC/FID**							
X0183	XG.2001.276-5		Diesel Range Organics	92	% Recovery	1	NA		03/08/01

QC Type **MSD: Matrix Spike Duplicate Precision** QC Matrix **SOLID**

QC Group	Run Sequence	CAS #	Analyte	Result	Units	Dilution Factor	Detection Limit	Code	Run Date
X0182-007		**SW846 5030A/8015A GRO by GC/FID**							
X0182	XG.2001.271-7		Gasoline Range Organics	11	RPD	1	NA		03/08/01
X0183-006		**SW846 ME/8015A Diesel Range Organics by GC/FID**							
X0183	XG.2001.276-5		Diesel Range Organics	5	RPD	1	NA		03/08/01

Assaigai Analytical Laboratories, Inc.

Surrogate Summary: QC

Client: CH2MHILL

ct: 0103101 160660.02.FF.SA

QC Type **LCS** QC Matrix **SOLID**

QC Group	Run Sequence	CAS #	Analyte	Result	Units	Dilution Factor	Detection Limit	Code	Run Date
X0182-002		GRO							
X0182	XG.2001.271-2	NA	4-Bromofluorobenzene-FID	105	% Recovery	1	NA		03/07/01
X0182	XG.2001.271-2	NA	4-Bromofluorobenzene-PID	4490	% Recovery	1	NA		03/07/01
X0182	XG.2001.271-2	NA	aaa-Trifluorotoluene-FID	105	% Recovery	1	NA		03/07/01
X0182	XG.2001.271-2	NA	aaa-Trifluorotoluene-PID	2160	% Recovery	1	NA		03/07/01
X0183-002		DRO							
X0183	XG.2001.276-2	NA	O-terphenyl	105	% Recovery	1	NA		03/08/01

QC Type **LCSD** QC Matrix **SOLID**

QC Group	Run Sequence	CAS #	Analyte	Result	Units	Dilution Factor	Detection Limit	Code	Run Date
X0182-003		GRO							
X0182	XG.2001.271-3	NA	4-Bromofluorobenzene-FID	103	% Recovery	1	NA		03/07/01
X0182	XG.2001.271-3	NA	4-Bromofluorobenzene-PID	504	% Recovery	1	NA		03/07/01
	XG.2001.271-3	NA	aaa-Trifluorotoluene-FID	105	% Recovery	1	NA		03/07/01
X0182	XG.2001.271-3	NA	aaa-Trifluorotoluene-PID	827	% Recovery	1	NA		03/07/01
X0183-003		DRO							
X0183	XG.2001.276-3	NA	O-terphenyl	102	% Recovery	1	NA		03/08/01

QC Type **MB** QC Matrix **SOLID**

QC Group	Run Sequence	CAS #	Analyte	Result	Units	Dilution Factor	Detection Limit	Code	Run Date
X0182-001		GRO							
X0182	XG.2001.271-1	NA	4-Bromofluorobenzene-FID	89	% Recovery	1	NA		03/07/01
X0182	XG.2001.271-1	NA	4-Bromofluorobenzene-PID	ND	% Recovery	1	NA		03/07/01
X0182	XG.2001.271-1	NA	aaa-Trifluorotoluene-FID	101	% Recovery	1	NA		03/07/01
X0182	XG.2001.271-1	NA	aaa-Trifluorotoluene-PID	22	% Recovery	1	NA		03/07/01
X0183-001		DRO							
X0183	XG.2001.276-1	NA	O-terphenyl	88	% Recovery	1	NA		03/08/01

Surrogate Summary: QC

Client: **CH2MHILL**

Project: **0103101** **160660.02.FF.SA**

QC Type **MS** QC Matrix **SOLID**

QC Group	Run Sequence	CAS #	Analyte	Result	Units	Dilution Factor	Detection Limit	Code	Run Date
X0182-006		GRO							
X0182	XG.2001.271-6	NA	4-Bromofluorobenzene-FID	102	% Recovery	1	NA		03/08/01
X0182	XG.2001.271-6	NA	4-Bromofluorobenzene-PID	321	% Recovery	1	NA		03/08/01
X0182	XG.2001.271-6	NA	aaa-Trifluorotoluene-FID	105	% Recovery	1	NA		03/08/01
X0182	XG.2001.271-6	NA	aaa-Trifluorotoluene-PID	658	% Recovery	1	NA		03/08/01
X0183-012		DRO							
X0183	XG.2001.276-11	NA	O-terphenyl	100	% Recovery	1	NA		03/08/01

QC Type **MSD** QC Matrix **SOLID**

QC Group	Run Sequence	CAS #	Analyte	Result	Units	Dilution Factor	Detection Limit	Code	Run Date
X0182-007		GRO							
X0182	XG.2001.271-7	NA	4-Bromofluorobenzene-FID	103	% Recovery	1	NA		03/08/01
X0182	XG.2001.271-7	NA	4-Bromofluorobenzene-PID	ND	% Recovery	1	NA		03/08/01
X0182	XG.2001.271-7	NA	aaa-Trifluorotoluene-FID	105	% Recovery	1	NA		03/08/0
X0182	XG.2001.271-7	NA	aaa-Trifluorotoluene-PID	2880	% Recovery	1	NA		03/08/01
X0183-006		DRO							
X0183	XG.2001.276-5	NA	O-terphenyl	106	% Recovery	1	NA		03/08/01

Surrogate Summary: Fraction

Client: **CH2MHILL**

ct: **0103101** **160660.02.FF.SA**

Client Sample ID **ST 106 SB32 130'** Sample Matrix **SOIL**

QC Group	Run Sequence	CAS #	Analyte	Result	Units	Dilution Factor	Detection Limit	Code	Run Date
0103101-01A		**GRO**							**X0182-004**
X0182	XG.2001.271-4	NA	4-Bromofluorobenzene-FID	95	% Recovery	1	NA		03/07/01
X0182	XG.2001.271-4	NA	4-Bromofluorobenzene-PID	ND	% Recovery	1	NA		03/07/01
X0182	XG.2001.271-4	NA	aaa-Trifluorotoluene-FID	103	% Recovery	1	NA		03/07/01
X0182	XG.2001.271-4	NA	aaa-Trifluorotoluene-PID	134	% Recovery	1	NA		03/07/01
0103101-01B		**DRO**							**X0183-004**
X0183	XG.2001.276-4	NA	O-terphenyl	87	% Recovery	1	NA		03/08/01

Client Sample ID **ST 106 SB32 270'** Sample Matrix **SOIL**

QC Group	Run Sequence	CAS #	Analyte	Result	Units	Dilution Factor	Detection Limit	Code	Run Date
0103101-02A		**GRO**							**X0182-005**
X0182	XG.2001.271-5	NA	4-Bromofluorobenzene-FID	92	% Recovery	1	NA		03/08/01
X0182	XG.2001.271-5	NA	4-Bromofluorobenzene-PID	ND	% Recovery	1	NA		03/08/01
	XG.2001.271-5	NA	aaa-Trifluorotoluene-FID	101	% Recovery	1	NA		03/08/01
X0182	XG.2001.271-5	NA	aaa-Trifluorotoluene-PID	ND	% Recovery	1	NA		03/08/01
0103101-02B		**DRO**							**X0183-007**
X0183	XG.2001.276-6	NA	O-terphenyl	90	% Recovery	1	NA		03/08/01

HDMB
FR163R

ASSAIGAI ANALYTICAL LABORATORIES, INC.

Chain of Custody Record

7300 JEFFERSON N.E.
ALBUQUERQUE, NEW MEXICO 87109
(505) 345-8964

3332 WEDGEWOOD
EL PASO, TEXAS 79925
(915) 593-6000

127 EASTGATE DRIVE, 212-C
LOS ALAMOS, NEW MEXICO 87544
(505) 662-2558

Lab job No. D103101 Date 3-6-01

Page 1 of 1

Client CH2M HILL

Address 6001 INDIAN SCHOOL RD NE #350

City / State / Zip ABQ NM 87110

Project Name / Number KHFB TO-10

Contract / Purchase Order / Quote

Project Manager / Contact H

Telephone No. 884 5600

Fax No. 8837507

Samplers : (signature)

AAL Fraction Number	Field Sample Number / Location	Date	Time	Sample Type	Type / Size of Container	Preservation Temp.	Preservation Chemical	No. of Containers	GRO	DRO									Remarks
	ST 106 SB32 130'	3-5	1340	Soil	4oz	ICE	NO	2	X	X									
	ST 106 SB32 270'	3-6	1250	Soil	4oz	ICE	NO	2	X	X									

Relinquished by:
Signature
Printed Wm J. LeFevre
Company CH2M HILL
Reason XFER TO LAB (over)

Date 3/6/01
Time 10:10

Received by:
Signature
Printed Emily Smith
Company AAL
Reason Analysis

Relinquished by:
Signature
Printed
Company
Reason

Date
Time

Received by:
Signature
Printed
Company
Reason

RECEIVED MAR 12 2001

Method of Shipment:
Shipment No.
Special Instructions:

Comments:

After analysis, samples are to be:
- ☐ Disposed of (additional fee)
- ☐ Stored (30 days max)
- ☐ Stored over 30 days (additional fee)
- ☐ Returned to customer

ASSAIGAI
ANALYTICAL
LABORATORIES, INC.
7300 Jefferson, NE • Albuquerque, New Mexico 87109 • (505) 345-8964 • FAX (505) 345-7259
3332 Wedgewood Dr., Suite N • El Paso, Texas 79925 • (915) 593-6000 • FAX (915) 593-7820
127 Eastgate Drive, 212-C • Los Alamos, New Mexico 87544 • (505) 662-255

RECEIVED MAR 2 - 2001

Explanation of codes

B	*analyte detected in Method Blank*
E	*result is estimated*
H	*analyzed out of hold time*
N	*tentatively identified compound*
S	*subcontracted*
1-9	*see footnote*

CH2MHILL
attn: **AMY HALLORAN**
6001 INDIAN SCHOOL RD NE STE 350
ALBUQUERQUE, NM 87110-4140

Assaigai Analytical Laboratories, Inc.

Certificate of Analysis

Client: **CH2MHILL**
Project: **0103111** **160660.02.FF.SA**

William P. Biava: President of Assaigai Analytical Laboratories, Inc.

Client Sample ID ***ST 106 SB32 300'*** Sample Matrix ***SOIL*** Sample Collected ***03/06/01 16:40:00***

QC Group	Run Sequence	CAS #	Analyte	Result	Units	Dilution Factor	Detection Limit	Code	Run Date
0103111-01A		**SW846 5030A/8015A GRO by GC/FID**							
X0182	XG.2001.271-8		Gasoline Range Organics	ND	mg / Kg	1	0.25		03/08/01
0103111-01B		**SW846 ME/8015A Diesel Range Organics by GC/FID**							
X0183	XG.2001.276-7		Diesel Range Organics	94	mg / Kg	1	25		03/08/01

Client Sample ID ***ST 106 SB32 310'*** Sample Matrix ***SOIL*** Sample Collected ***03/06/01 17:35:00***

QC Group	Run Sequence	CAS #	Analyte	Result	Units	Dilution Factor	Detection Limit	Code	Run Date
0103111-02A		**SW846 5030A/8015A GRO by GC/FID**							
X0182	XG.2001.271-9		Gasoline Range Organics	ND	mg / Kg	1	0.25		03/08/01
0103111-02B		**SW846 ME/8015A Diesel Range Organics by GC/FID**							
X0183	XG.2001.276-8		Diesel Range Organics	88	mg / Kg	1	25		03/08/01
0103111-02C		**SW846 8260A Purgeable VOCs by GC/MS**							
X0163	XG.2001.273-11	75-34-3	1,1 Dichloroethane	ND	mg / Kg	1	0.005		03/08/01
X0163	XG.2001.273-11	75-34-3	1,1 Dichloroethene	ND	mg / Kg	1	0.005		03/08/01
X0163	XG.2001.273-11	71-55-6	1,1,1 Trichloroethane	ND	mg / Kg	1	0.005		03/08/01
[illegible]3	XG.2001.273-11	630-20-6	1,1,1,2 Tetrachloroethane	ND	mg / Kg	1	0.005		03/08/01
[illegible]3	XG.2001.273-11	79-00-5	1,1,2 Trichloroethane	ND	mg / Kg	1	0.005		03/08/01

Member
American Council of Independent Laboratories

REPRODUCTION OF THIS REPORT IN LESS THAN FULL REQUIRES THE WRITTEN CONSENT OF AAL
THIS REPORT MAY NOT BE USED IN ANY MANNER BY THE CLIENT OR ANY OTHER PERSON TO CLAIM
PRODUCT ENDORSEMENT BY ANY ACCREDITATION PROGRAM

Certificate of Analysis

Client: **CH2MHILL**

Project: **0103111** **160660.02.FF.SA**

X0163	XG.2001.273-11	79-34-5	1,1,2,2 Tetrachloroethane	ND	mg / Kg	1	0.005		03/08/0
X0163	XG.2001.273-11	106-93-4	1,2 Dibromoethane (EDB)	ND	mg / Kg	1	0.005		03/08/0
X0163	XG.2001.273-11	95-50-1	1,2 Dichlorobenzene	ND	mg / Kg	1	0.005		03/08/0
X0163	XG.2001.273-11	107-06-2	1,2 Dichloroethane	ND	mg / Kg	1	0.005		03/08/0
X0163	XG.2001.273-11	78-87-5	1,2 Dichloropropane	ND	mg / Kg	1	0.005		03/08/0
X0163	XG.2001.273-11	96-18-4	1,2,3 Trichloropropane	ND	mg / Kg	1	0.005		03/08/0
X0163	XG.2001.273-11	95-63-6	1,2,4-Trimethylbenzene	ND	mg / Kg	1	0.005		03/08/0
X0163	XG.2001.273-11	541-73-1	1,3 Dichlorobenzene	ND	mg / Kg	1	0.005		03/08/0
X0163	XG.2001.273-11	108-67-8	1,3,5-Trimethylbenzene	ND	mg / Kg	1	0.005		03/08/0
X0163	XG.2001.273-11	764-41-0	1,4 Dichloro-2-butene	ND	mg / Kg	1	0.05		03/08/0
X0163	XG.2001.273-11	106-46-7	1,4 Dichlorobenzene	ND	mg / Kg	1	0.005		03/08/0
X0163	XG.2001.273-11	78-93-3	2-Butanone (MEK)	ND	mg / Kg	1	0.025		03/08/01
X0163	XG.2001.273-11	110-75-8	2-Chloroethylvinylether	ND	mg / Kg	1	0.025		03/08/01
X0163	XG.2001.273-11	591-78-6	2-Hexanone (MBK)	ND	mg / Kg	1	0.025		03/08/01
X0163	XG.2001.273-11	108-10-1	4-Methyl-2-pentanone (MIBK)	ND	mg / Kg	1	0.025		03/08/01
X0163	XG.2001.273-11	67-64-1	Acetone	ND	mg / Kg	1	0.05		03/08/01
X0163	XG.2001.273-11	107-02-8	Acrolein	ND	mg / Kg	1	0.1		03/08/01
X0163	XG.2001.273-11	107-13-1	Acrylonitrile	ND	mg / Kg	1	0.1		03/08/01
X0163	XG.2001.273-11	71-43-2	Benzene	ND	mg / Kg	1	0.005		03/08/01
X0163	XG.2001.273-11	75-27-4	Bromodichloromethane	ND	mg / Kg	1	0.005		03/08/01
X0163	XG.2001.273-11	75-25-2	Bromoform	ND	mg / Kg	1	0.005		03/08/01
X0163	XG.2001.273-11	74-83-9	Bromomethane	ND	mg / Kg	1	0.025		03/08/01
X0163	XG.2001.273-11	75-15-0	Carbon disulfide	ND	mg / Kg	1	0.025		03/08/0
X0163	XG.2001.273-11	56-23-5	Carbon tetrachloride	ND	mg / Kg	1	0.005		03/08
X0163	XG.2001.273-11	108-90-7	Chlorobenzene	ND	mg / Kg	1	0.005		03/08/01
X0163	XG.2001.273-11	124-48-1	Chlorodibromomethane	ND	mg / Kg	1	0.005		03/08/01
X0163	XG.2001.273-11	75-00-3	Chloroethane	ND	mg / Kg	1	0.025		03/08/01
X0163	XG.2001.273-11	67-66-3	Chloroform	ND	mg / Kg	1	0.005		03/08/01
X0163	XG.2001.273-11	74-87-3	Chloromethane	ND	mg / Kg	1	0.025		03/08/01
X0163	XG.2001.273-11	156-59-2	cis-1,2 dichloroethene	ND	mg / Kg	1	0.005		03/08/01
X0163	XG.2001.273-11	10061-01-5	cis-1,3 dichloropropene	ND	mg / Kg	1	0.005		03/08/01
X0163	XG.2001.273-11	74-95-3	Dibromomethane	ND	mg / Kg	1	0.005		03/08/01
X0163	XG.2001.273-11	97-63-2	Ethyl methacrylate	ND	mg / Kg	1	0.025		03/08/01
X0163	XG.2001.273-11	100-41-4	Ethylbenzene	ND	mg / Kg	1	0.005		03/08/01
X0163	XG.2001.273-11		Freon 113	ND	mg / Kg	1	0.025		03/08/01
X0163	XG.2001.273-11	75-71-8	Freon 12	ND	mg / Kg	1	0.05		03/08/01
X0163	XG.2001.273-11	74-88-4	Iodomethane	ND	mg / Kg	1	0.025		03/08/01
X0163	XG.2001.273-11	1634-04-4	Methyl t-butyl ether (MTBE)	ND	mg / Kg	1	0.005		03/08/01
X0163	XG.2001.273-11	75-09-2	Methylene chloride	ND	mg / Kg	1	0.05		03/08/01
X0163	XG.2001.273-11	91-20-3	Naphthalene	ND	mg / Kg	1	0.025		03/08/01
X0163	XG.2001.273-11	95-47-6	o-Xylene	ND	mg / Kg	1	0.005		03/08/01
X0163	XG.2001.273-11	108-38-3/106-42	p/m Xylenes	ND	mg / Kg	1	0.01		03/08/01
X0163	XG.2001.273-11	100-42-5	Styrene	ND	mg / Kg	1	0.005		03/08/01
X0163	XG.2001.273-11	156-60-5	t-1,2 Dichloroethene	ND	mg / Kg	1	0.005		03/08/01
X0163	XG.2001.273-11	10061-02-6	t-1,3 Dichloropropene	ND	mg / Kg	1	0.005		03/08/01
X0163	XG.2001.273-11	127-18-4	Tetrachloroethene	ND	mg / Kg	1	0.005		03/08/01
X0163	XG.2001.273-11	108-88-3	Toluene	ND	mg / Kg	1	0.005		03/08/01
X0163	XG.2001.273-11	79-01-6	Trichloroethene	ND	mg / Kg	1	0.005		03/08/0

Certificate of Analysis

t: **CH2MHILL**

Project: **0103111** **160660.02.FF.SA**

X0163	XG.2001.273-11	75-69-4	Trichlorofluoromethane	ND	mg / Kg	1	0.025		03/08/01
X0163	XG.2001.273-11	108-05-4	Vinyl acetate	ND	mg / Kg	1	0.025		03/08/01
X0163	XG.2001.273-11	75-01-4	Vinyl chloride	ND	mg / Kg	1	0.025		03/08/01

Client Sample ID ***ST 106 SB32 320'*** Sample Matrix ***SOIL*** Sample Collected ***03/07/01 09:25:00***

QC Group	Run Sequence	CAS #	Analyte	Result	Units	Dilution Factor	Detection Limit	Code	Run Date
0103111-03A		**SW846 5030A/8015A GRO by GC/FID**							
X0182	XG.2001.271-10		Gasoline Range Organics	ND	mg / Kg	1	0.25		03/08/01
0103111-03B		**SW846 ME/8015A Diesel Range Organics by GC/FID**							
X0183	XG.2001.276-9		Diesel Range Organics	ND	mg / Kg	1	25		03/08/01

Client Sample ID ***ST 106 SB32 330'*** Sample Matrix ***SOIL*** Sample Collected ***03/07/01 10:15:00***

QC Group	Run Sequence	CAS #	Analyte	Result	Units	Dilution Factor	Detection Limit	Code	Run Date
.11-04A		**SW846 5030A/8015A GRO by GC/FID**							
X0182	XG.2001.271-11		Gasoline Range Organics	ND	mg / Kg	1	0.25		03/08/01
0103111-04B		**SW846 ME/8015A Diesel Range Organics by GC/FID**							
X0183	XG.2001.276-10		Diesel Range Organics	ND	mg / Kg	1	25		03/08/01
0103111-04C		**SW846 8260A Purgeable VOCs by GC/MS**							
X0190	XG.2001.300-2	75-34-3	1,1 Dichloroethane	ND	mg / Kg	1	0.005		03/13/01
X0190	XG.2001.300-2	75-34-3	1,1 Dichloroethene	ND	mg / Kg	1	0.005		03/13/01
X0190	XG.2001.300-2	71-55-6	1,1,1 Trichloroethane	ND	mg / Kg	1	0.005		03/13/01
X0190	XG.2001.300-2	630-20-6	1,1,1,2 Tetrachloroethane	ND	mg / Kg	1	0.005		03/13/01
X0190	XG.2001.300-2	79-00-5	1,1,2 Trichloroethane	ND	mg / Kg	1	0.005		03/13/01
X0190	XG.2001.300-2	79-34-5	1,1,2,2 Tetrachloroethane	ND	mg / Kg	1	0.005		03/13/01
X0190	XG.2001.300-2	106-93-4	1,2 Dibromoethane (EDB)	ND	mg / Kg	1	0.005		03/13/01
X0190	XG.2001.300-2	95-50-1	1,2 Dichlorobenzene	ND	mg / Kg	1	0.005		03/13/01
X0190	XG.2001.300-2	107-06-2	1,2 Dichloroethane	ND	mg / Kg	1	0.005		03/13/01
X0190	XG.2001.300-2	78-87-5	1,2 Dichloropropane	ND	mg / Kg	1	0.005		03/13/01
X0190	XG.2001.300-2	96-18-4	1,2,3 Trichloropropane	ND	mg / Kg	1	0.005		03/13/01
X0190	XG.2001.300-2	95-63-6	1,2,4-Trimethylbenzene	ND	mg / Kg	1	0.005		03/13/01
X0190	XG.2001.300-2	541-73-1	1,3 Dichlorobenzene	ND	mg / Kg	1	0.005		03/13/01
X0190	XG.2001.300-2	108-67-8	1,3,5-Trimethylbenzene	ND	mg / Kg	1	0.005		03/13/01
X0190	XG.2001.300-2	764-41-0	1,4 Dichloro-2-butene	ND	mg / Kg	1	0.05		03/13/01
X0190	XG.2001.300-2	106-46-7	1,4 Dichlorobenzene	ND	mg / Kg	1	0.005		03/13/01
X0190	XG.2001.300-2	78-93-3	2-Butanone (MEK)	ND	mg / Kg	1	0.025		03/13/01
X0190	XG.2001.300-2	110-75-8	2-Chloroethylvinylether	ND	mg / Kg	1	0.025		03/13/01
	XG.2001.300-2	591-78-6	2-Hexanone (MBK)	ND	mg / Kg	1	0.025		03/13/01

Certificate of Analysis

Client: **CH2MHILL**

Project: **0103111** **160660.02.FF.SA**

X0190	XG.2001.300-2	108-10-1	4-Methyl-2-pentanone (MIBK)	ND	mg / Kg	1	0.025		03/13/01
X0190	XG.2001.300-2	67-64-1	Acetone	ND	mg / Kg	1	0.05		03/13/01
X0190	XG.2001.300-2	107-02-8	Acrolein	ND	mg / Kg	1	0.1		03/13/01
X0190	XG.2001.300-2	107-13-1	Acrylonitrile	ND	mg / Kg	1	0.1		03/13/01
X0190	XG.2001.300-2	71-43-2	Benzene	ND	mg / Kg	1	0.005		03/13/01
X0190	XG.2001.300-2	75-27-4	Bromodichloromethane	ND	mg / Kg	1	0.005		03/13/01
X0190	XG.2001.300-2	75-25-2	Bromoform	ND	mg / Kg	1	0.005		03/13/01
X0190	XG.2001.300-2	74-83-9	Bromomethane	ND	mg / Kg	1	0.025		03/13/01
X0190	XG.2001.300-2	75-15-0	Carbon disulfide	ND	mg / Kg	1	0.025		03/13/01
X0190	XG.2001.300-2	56-23-5	Carbon tetrachloride	ND	mg / Kg	1	0.005		03/13/01
X0190	XG.2001.300-2	108-90-7	Chlorobenzene	ND	mg / Kg	1	0.005		03/13/01
X0190	XG.2001.300-2	124-48-1	Chlorodibromomethane	ND	mg / Kg	1	0.005		03/13/01
X0190	XG.2001.300-2	75-00-3	Chloroethane	ND	mg / Kg	1	0.025		03/13/01
X0190	XG.2001.300-2	67-66-3	Chloroform	ND	mg / Kg	1	0.005		03/13/01
X0190	XG.2001.300-2	74-87-3	Chloromethane	ND	mg / Kg	1	0.025		03/13/01
X0190	XG.2001.300-2	156-59-2	cis-1,2 dichloroethene	ND	mg / Kg	1	0.005		03/13/01
X0190	XG.2001.300-2	10061-01-5	cis-1,3 dichloropropene	ND	mg / Kg	1	0.005		03/13/01
X0190	XG.2001.300-2	74-95-3	Dibromomethane	ND	mg / Kg	1	0.005		03/13/01
X0190	XG.2001.300-2	97-63-2	Ethyl methacrylate	ND	mg / Kg	1	0.025		03/13/01
X0190	XG.2001.300-2	100-41-4	Ethylbenzene	ND	mg / Kg	1	0.005		03/13/01
X0190	XG.2001.300-2		Freon 113	ND	mg / Kg	1	0.025		03/13/01
X0190	XG.2001.300-2	75-71-8	Freon 12	ND	mg / Kg	1	0.05		03/13/01
X0190	XG.2001.300-2	74-88-4	Iodomethane	ND	mg / Kg	1	0.025		03/13/0
X0190	XG.2001.300-2	1634-04-4	Methyl t-butyl ether (MTBE)	ND	mg / Kg	1	0.005		03/13
X0190	XG.2001.300-2	75-09-2	Methylene chloride	ND	mg / Kg	1	0.05		03/13/01
X0190	XG.2001.300-2	91-20-3	Naphthalene	ND	mg / Kg	1	0.025		03/13/01
X0190	XG.2001.300-2	95-47-6	o-Xylene	ND	mg / Kg	1	0.005		03/13/01
X0190	XG.2001.300-2	108-38-3/106-42	p/m Xylenes	ND	mg / Kg	1	0.01		03/13/01
X0190	XG.2001.300-2	100-42-5	Styrene	ND	mg / Kg	1	0.005		03/13/01
X0190	XG.2001.300-2	156-60-5	t-1,2 Dichloroethene	ND	mg / Kg	1	0.005		03/13/01
X0190	XG.2001.300-2	10061-02-6	t-1,3 Dichloropropene	ND	mg / Kg	1	0.005		03/13/01
X0190	XG.2001.300-2	127-18-4	Tetrachloroethene	ND	mg / Kg	1	0.005		03/13/01
X0190	XG.2001.300-2	108-88-3	Toluene	ND	mg / Kg	1	0.005		03/13/01
X0190	XG.2001.300-2	79-01-6	Trichloroethene	ND	mg / Kg	1	0.005		03/13/01
X0190	XG.2001.300-2	75-69-4	Trichlorofluoromethane	ND	mg / Kg	1	0.025		03/13/01
X0190	XG.2001.300-2	108-05-4	Vinyl acetate	ND	mg / Kg	1	0.025		03/13/01
X0190	XG.2001.300-2	75-01-4	Vinyl chloride	ND	mg / Kg	1	0.025		03/13/01

0103111-04D **SW846 3550A/8270B SVOCs by GC/MS**

X0167	XG.2001.326-2	120-82-1	1,2,4-Trichlorobenzene	ND	mg / Kg	1	0.03		03/19/01
X0167	XG.2001.326-2	95-50-1	1,2-Dichlorobenzene	ND	mg / Kg	1	0.03		03/19/01
X0167	XG.2001.326-2	541-73-1	1,3-Dichlorobenzene	ND	mg / Kg	1	0.03		03/19/01
X0167	XG.2001.326-2		1,4-Dichlorobenzene	ND	mg / Kg	1	0.03		03/19/01
X0167	XG.2001.326-2	90-12-0	1-Methylnaphthalene	ND	mg / Kg	1	0.03		03/19/01
X0167	XG.2001.326-2	58-90-2	2,3,4,6-Tetrachlorophenol	ND	mg / Kg	1	1.5		03/19/01
X0167	XG.2001.326-2	95-95-4	2,4,5-Trichlorophenol	ND	mg / Kg	1	0.3		03/19/01
X0167	XG.2001.326-2	88-06-2	2,4,6-Trichlorophenol	ND	mg / Kg	1	0.3		03/19/01
X0167	XG.2001.326-2	120-83-2	2,4-Dichlorophenol	ND	mg / Kg	1	0.3		03/19/01

RECEIVED MAR 2 0 2001

Certificate of Analysis

ıt: CH2MHILL

Project: 0103111 160660.02.FF.SA

X0167	XG.2001.326-2	105-67-9	2,4-Dimethylphenol	ND	mg / Kg	1	0.03		03/19/01
X0167	XG.2001.326-2	51-28-5	2,4-Dinitrophenol	ND	mg / Kg	1	0.67		03/19/01
X0167	XG.2001.326-2	121-14-2	2,4-Dinitrotoluene	ND	mg / Kg	1	0.3		03/19/01
X0167	XG.2001.326-2	606-20-2	2,6-Dinitrotoluene	ND	mg / Kg	1	0.3		03/19/01
X0167	XG.2001.326-2	91-58-7	2-Chloronaphthalene	ND	mg / Kg	1	0.03		03/19/01
X0167	XG.2001.326-2	95-57-8	2-Chlorophenol	ND	mg / Kg	1	0.03		03/19/01
X0167	XG.2001.326-2	91-57-6	2-Methylnaphthalene	ND	mg / Kg	1	0.03		03/19/01
X0167	XG.2001.326-2	95-48-7	2-Methylphenol	ND	mg / Kg	1	0.03		03/19/01
X0167	XG.2001.326-2	88-74-4	2-Nitroaniline	ND	mg / Kg	1	0.3		03/19/01
X0167	XG.2001.326-2	88-75-5	2-Nitrophenol	ND	mg / Kg	1	0.3		03/19/01
X0167	XG.2001.326-2		3+4 Methylphenol	ND	mg / Kg	1	0.03		03/19/01
X0167	XG.2001.326-2	91-94-1	3,3-Dichlorobenzidine	ND	mg / Kg	1	0.3		03/19/01
X0167	XG.2001.326-2	99-09-2	3-Nitroaniline	ND	mg / Kg	1	0.3		03/19/01
X0167	XG.2001.326-2	534-52-1	4,6-Dinitro-2-methylphenol	ND	mg / Kg	1	0.3		03/19/01
X0167	XG.2001.326-2	101-55-3	4-Bromophenyl-phenylether	ND	mg / Kg	1	0.03		03/19/01
X0167	XG.2001.326-2	59-50-7	4-Chloro-3-methylphenol	ND	mg / Kg	1	0.3		03/19/01
X0167	XG.2001.326-2	106-47-8	4-Chloroaniline	ND	mg / Kg	1	0.3		03/19/01
X0167	XG.2001.326-2	7005-72-3	4-Chlorophenyl-phenylether	ND	mg / Kg	1	0.03		03/19/01
X0167	XG.2001.326-2	100-01-6	4-Nitroaniline	ND	mg / Kg	1	0.3		03/19/01
X0167	XG.2001.326-2	100-02-7	4-Nitrophenol	ND	mg / Kg	1	0.6		03/19/01
X0167	XG.2001.326-2	83-32-9	Acenaphthene	ND	mg / Kg	1	0.03		03/19/01
X0167	XG.2001.326-2	208-96-8	Acenaphthylene	ND	mg / Kg	1	0.03		03/19/01
[illegible]	XG.2001.326-2	62-53-3	Aniline	ND	mg / Kg	1	0.3		03/19/01
[illegible]	XG.2001.326-2	120-12-7	Anthracene	ND	mg / Kg	1	0.03		03/19/01
X0167	XG.2001.326-2		Azobenzene&1,2-Diphenylhydrazine	ND	mg / Kg	1	0.03		03/19/01
X0167	XG.2001.326-2	56-55-3	Benzo (a) anthracene	ND	mg / Kg	1	0.03		03/19/01
X0167	XG.2001.326-2	50-32-8	Benzo(a)pyrene	ND	mg / Kg	1	0.03		03/19/01
X0167	XG.2001.326-2		Benzo(b & k)fluoranthene	ND	mg / Kg	1	0.03		03/19/01
X0167	XG.2001.326-2	191-24-2	Benzo(g,h,i)perylene	ND	mg / Kg	1	0.3		03/19/01
X0167	XG.2001.326-2	64-85-0	Benzoic acid	ND	mg / Kg	1	3		03/19/01
X0167	XG.2001.326-2	100-51-6	Benzyl alcohol	ND	mg / Kg	1	1.5		03/19/01
X0167	XG.2001.326-2	111-44-4	bis (2-Chloroethyl) ether	ND	mg / Kg	1	0.03		03/19/01
X0167	XG.2001.326-2	111-91-1	bis(2-Chloroethoxy)methane	ND	mg / Kg	1	0.03		03/19/01
X0167	XG.2001.326-2	108-60-1	bis(2-Chloroisopropyl)ether	ND	mg / Kg	1	0.03		03/19/01
X0167	XG.2001.326-2	117-81-7	bis(2-Ethylhexyl)phthalate	ND	mg / Kg	1	0.3		03/19/01
X0167	XG.2001.326-2	85-68-7	Butylbenzylphthalate	ND	mg / Kg	1	0.03		03/19/01
X0167	XG.2001.326-2	218-01-9	Chrysene	ND	mg / Kg	1	0.03		03/19/01
X0167	XG.2001.326-2	84-74-2	di-n-Butylphthalate	ND	mg / Kg	1	0.3		03/19/01
X0167	XG.2001.326-2	117-84-0	di-n-Octylpthalate	ND	mg / Kg	1	0.3		03/19/01
X0167	XG.2001.326-2	53-70-3	Dibenz(a,h)anthracene	ND	mg / Kg	1	0.3		03/19/01
X0167	XG.2001.326-2	132-64-9	Dibenzofuran	ND	mg / Kg	1	0.03		03/19/01
X0167	XG.2001.326-2	84-66-2	Diethylphthalate	ND	mg / Kg	1	0.03		03/19/01
X0167	XG.2001.326-2	131-11-3	Dimethylphthalate	ND	mg / Kg	1	0.03		03/19/01
X0167	XG.2001.326-2	206-44-0	Fluoranthene	ND	mg / Kg	1	0.03		03/19/01
X0167	XG.2001.326-2	86737	Fluorene	ND	mg / Kg	1	0.03		03/19/01
X0167	XG.2001.326-2	118-74-1	Hexachlorobenzene	ND	mg / Kg	1	0.03		03/19/01
X0167	XG.2001.326-2	87-68-3	Hexachlorobutadiene	ND	mg / Kg	1	0.03		03/19/01
[illegible]	XG.2001.326-2	77-47-4	Hexachlorocyclopentadiene	ND	mg / Kg	1	1.5		03/19/01

Certificate of Analysis

Client: **CH2MHILL**

Project: **0103111** **160660.02.FF.SA**

X0167	XG.2001.326-2	67-72-1	Hexachloroethane	ND	mg / Kg	1	0.03		03/19/0
X0167	XG.2001.326-2	193-39-5	Indeno(1,2,3-cd)pyrene	ND	mg / Kg	1	0.3		03/19/0
X0167	XG.2001.326-2	78-59-1	Isophorone	ND	mg / Kg	1	0.03		03/19/0
X0167	XG.2001.326-2	621-64-7	n-Nitroso-di-n-propylamine	ND	mg / Kg	1	0.03		03/19/0
X0167	XG.2001.326-2	62-75-9	n-Nitroso-dimethyl-amine	ND	mg / Kg	1	0.3		03/19/0
X0167	XG.2001.326-2	86-30-6	n-Nitrosodiphenylamine	ND	mg / Kg	1	0.03		03/19/0
X0167	XG.2001.326-2	91-20-3	Naphthalene	ND	mg / Kg	1	0.03		03/19/0
X0167	XG.2001.326-2	98-95-3	Nitrobenzene	ND	mg / Kg	1	0.03		03/19/0
X0167	XG.2001.326-2	87-86-5	Pentachlorophenol	ND	mg / Kg	1	0.3		03/19/0
X0167	XG.2001.326-2	85-01-8	Phenanthrene	ND	mg / Kg	1	0.03		03/19/0
X0167	XG.2001.326-2	108-95-2	Phenol	ND	mg / Kg	1	0.3		03/19/0
X0167	XG.2001.326-2	129-00-0	Pyrene	ND	mg / Kg	1	0.03		03/19/0
X0167	XG.2001.326-2	110-86-1	Pyridine	ND	mg / Kg	1	0.3		03/19/0

**** Sample specific Detection Limit is determined by multiplying the sample Dilution Factor by the listed Reporting Detection Limit. ****

**** ND = Not detected: less than the sample specific Detection Limit. Results relate only to the items tested. ****

Quality Control Summary

Explanation of codes	
D	*Not applicable due to sample dilution*
L	*Not applicable due to MDL proximity*

Client: **CH2MHILL**
Project: **0103111** **160660.02.FF.SA**

QC Type **LCS: Lab Control Spike** QC Matrix **SOLID**

QC Group	Run Sequence	CAS #	Analyte	Result	Units	Dilution Factor	Detection Limit	Code	Run Date
X0163-002		**SW846 8260A Purgeable VOCs by GC/MS**							
X0163	XG.2001.240-2	75-34-3	1,1 Dichloroethene	112	% Recovery	1	NA		02/21/01
X0163	XG.2001.240-2	106-46-7	1,4 Dichlorobenzene	103	% Recovery	1	NA		02/21/01
X0163	XG.2001.240-2	71-43-2	Benzene	112	% Recovery	1	NA		02/21/01
X0163	XG.2001.240-2	108-90-7	Chlorobenzene	108	% Recovery	1	NA		02/21/01
X0163	XG.2001.240-2	108-88-3	Toluene	114	% Recovery	1	NA		02/21/01
X0163	XG.2001.240-2	79-01-6	Trichloroethene	106	% Recovery	1	NA		02/21/01
X0167-002		**SW846 3550A/8270B SVOCs by GC/MS**							
X0167	XG.2001.223-2	120-82-1	1,2,4-Trichlorobenzene	65	% Recovery	1	NA		02/22/01
X0167	XG.2001.223-2	121-14-2	2,4-Dinitrotoluene	75	% Recovery	1	NA		02/22/01
X0167	XG.2001.223-2	95-57-8	2-Chlorophenol	72	% Recovery	1	NA		02/22/01
X0167	XG.2001.223-2	59-50-7	4-Chloro-3-methylphenol	78	% Recovery	1	NA		02/22/01
X0167	XG.2001.223-2	100-02-7	4-Nitrophenol	92	% Recovery	1	NA		02/22/01
X0167	XG.2001.223-2	83-32-9	Acenaphthene	82	% Recovery	1	NA		02/22/01
X0167	XG.2001.223-2	117-84-0	di-n-Octylpthalate	90	% Recovery	1	NA		02/22/01
X0167	XG.2001.223-2	621-64-7	n-Nitroso-di-n-propylamine	80	% Recovery	1	NA		02/22/01
X0167	XG.2001.223-2	87-86-5	Pentachlorophenol	92	% Recovery	1	NA		02/22/01
X0167	XG.2001.223-2	108-95-2	Phenol	68	% Recovery	1	NA		02/22/01
X0167	XG.2001.223-2	129-00-0	Pyrene	83	% Recovery	1	NA		02/22/01
X0182-002		**SW846 5030A/8015A GRO by GC/FID**							
X0182	XG.2001.271-2		Gasoline Range Organics	114	% Recovery	1	NA		03/07/01
X0183-002		**SW846 ME/8015A Diesel Range Organics by GC/FID**							
X0183	XG.2001.276-2		Diesel Range Organics	90	% Recovery	1	NA		03/08/01
X0190-007		**SW846 8260A Purgeable VOCs by GC/MS**							
X0190	XG.2001.300-7	75-34-3	1,1 Dichloroethene	113	% Recovery	1	NA		03/13/01
X0190	XG.2001.300-7	106-46-7	1,4 Dichlorobenzene	103	% Recovery	1	NA		03/13/01
X0190	XG.2001.300-7	71-43-2	Benzene	111	% Recovery	1	NA		03/13/01
X0190	XG.2001.300-7	108-90-7	Chlorobenzene	108	% Recovery	1	NA		03/13/01
X0190	XG.2001.300-7	108-88-3	Toluene	112	% Recovery	1	NA		03/13/01
X0190	XG.2001.300-7	79-01-6	Trichloroethene	110	% Recovery	1	NA		03/13/01

QC Type **LCSD: Lab Control Spike Duplicate Accuracy** QC Matrix **SOLID**

QC Group	Run Sequence	CAS #	Analyte	Result	Units	Dilution Factor	Detection Limit	Code	Run Date
X0163-003		**SW846 8260A Purgeable VOCs by GC/MS**							
X0163	XG.2001.240-3	75-34-3	1,1 Dichloroethene	106	% Recovery	1	NA		02/21/01
X0163	XG.2001.240-3	106-46-7	1,4 Dichlorobenzene	102	% Recovery	1	NA		02/21/01
X0163	XG.2001.240-3	71-43-2	Benzene	108	% Recovery	1	NA		02/21/01
X0163	XG.2001.240-3	108-90-7	Chlorobenzene	104	% Recovery	1	NA		02/21/01
X0163	XG.2001.240-3	108-88-3	Toluene	111	% Recovery	1	NA		02/21/01

Quality Control Summary

Client: **CH2MHILL**

Project: **0103111** **160660.02.FF.SA**

Explanation of codes

D *Not applicable due to sample dilu*

L *Not applicable due to MDL proxim*

X0163	XG.2001.240-3	79-01-6	Trichloroethene	102	% Recovery	1	NA		02/21/01
X0167-003		**SW846 3550A/8270B SVOCs by GC/MS**							
X0167	XG.2001.223-3	120-82-1	1,2,4-Trichlorobenzene	66	% Recovery	1	NA		02/22/01
X0167	XG.2001.223-3	121-14-2	2,4-Dinitrotoluene	76	% Recovery	1	NA		02/22/01
X0167	XG.2001.223-3	95-57-8	2-Chlorophenol	72	% Recovery	1	NA		02/22/01
X0167	XG.2001.223-3	59-50-7	4-Chloro-3-methylphenol	80	% Recovery	1	NA		02/22/01
X0167	XG.2001.223-3	100-02-7	4-Nitrophenol	94	% Recovery	1	NA		02/22/01
X0167	XG.2001.223-3	83-32-9	Acenaphthene	85	% Recovery	1	NA		02/22/01
X0167	XG.2001.223-3	117-84-0	di-n-Octylpthalate	90	% Recovery	1	NA		02/22/01
X0167	XG.2001.223-3	621-64-7	n-Nitroso-di-n-propylamine	81	% Recovery	1	NA		02/22/01
X0167	XG.2001.223-3	87-86-5	Pentachlorophenol	92	% Recovery	1	NA		02/22/01
X0167	XG.2001.223-3	108-95-2	Phenol	69	% Recovery	1	NA		02/22/01
X0167	XG.2001.223-3	129-00-0	Pyrene	84	% Recovery	1	NA		02/22/01
X0182-003		**SW846 5030A/8015A GRO by GC/FID**							
X0182	XG.2001.271-3		Gasoline Range Organics	104	% Recovery	1	NA		03/07/01
X0183-003		**SW846 ME/8015A Diesel Range Organics by GC/FID**							
X0183	XG.2001.276-3		Diesel Range Organics	86	% Recovery	1	NA		03/08/01
X0190-008		**SW846 8260A Purgeable VOCs by GC/MS**							
X0190	XG.2001.300-8	75-34-3	1,1 Dichloroethene	118	% Recovery	1	NA		03/13/01
X0190	XG.2001.300-8	106-46-7	1,4 Dichlorobenzene	105	% Recovery	1	NA		03/13/01
X0190	XG.2001.300-8	71-43-2	Benzene	115	% Recovery	1	NA		03/13/01
X0190	XG.2001.300-8	108-90-7	Chlorobenzene	111	% Recovery	1	NA		03/13
X0190	XG.2001.300-8	108-88-3	Toluene	114	% Recovery	1	NA		03/13
X0190	XG.2001.300-8	79-01-6	Trichloroethene	113	% Recovery	1	NA		03/13/01

QC Type **LCSD: Lab Control Spike Duplicate Precision** QC Matrix **SOLID**

QC Group	Run Sequence	CAS #	Analyte	Result	Units	Dilution Factor	Detection Limit	Code	Run Date
X0163-003		**SW846 8260A Purgeable VOCs by GC/MS**							
X0163	XG.2001.240-3	75-34-3	1,1 Dichloroethene	5	RPD	1	NA		02/21/01
X0163	XG.2001.240-3	106-46-7	1,4 Dichlorobenzene	1	RPD	1	NA		02/21/01
X0163	XG.2001.240-3	71-43-2	Benzene	3	RPD	1	NA		02/21/01
X0163	XG.2001.240-3	108-90-7	Chlorobenzene	3	RPD	1	NA		02/21/01
X0163	XG.2001.240-3	108-88-3	Toluene	3	RPD	1	NA		02/21/01
X0163	XG.2001.240-3	79-01-6	Trichloroethene	4	RPD	1	NA		02/21/01
X0167-003		**SW846 3550A/8270B SVOCs by GC/MS**							
X0167	XG.2001.223-3	120-82-1	1,2,4-Trichlorobenzene	< 1	RPD	1	NA		02/22/01
X0167	XG.2001.223-3	121-14-2	2,4-Dinitrotoluene	1	RPD	1	NA		02/22/01
X0167	XG.2001.223-3	95-57-8	2-Chlorophenol	< 1	RPD	1	NA		02/22/01
X0167	XG.2001.223-3	59-50-7	4-Chloro-3-methylphenol	2	RPD	1	NA		02/22/01
X0167	XG.2001.223-3	100-02-7	4-Nitrophenol	1	RPD	1	NA		02/22/01
X0167	XG.2001.223-3	83-32-9	Acenaphthene	3	RPD	1	NA		02/22/01
X0167	XG.2001.223-3	117-84-0	di-n-Octylpthalate	< 1	RPD	1	NA		02/22/01
X0167	XG.2001.223-3	621-64-7	n-Nitroso-di-n-propylamine	< 1	RPD	1	NA		02/22/0
X0167	XG.2001.223-3	87-86-5	Pentachlorophenol	< 1	RPD	1	NA		02/2

Quality Control Summary

Explanation of codes

D	*Not applicable due to sample dilution*
L	*Not applicable due to MDL proximity*

Client: **CH2MHILL**

Project: **0103111** **160660.02.FF.SA**

X0167	XG.2001.223-3	108-95-2	Phenol	< 1	RPD	1	NA		02/22/01
X0167	XG.2001.223-3	129-00-0	Pyrene	< 1	RPD	1	NA		02/22/01
X0182-003		**SW846 5030A/8015A GRO by GC/FID**							
X0182	XG.2001.271-3		Gasoline Range Organics	9	RPD	1	NA		03/07/01
X0183-003		**SW846 ME/8015A Diesel Range Organics by GC/FID**							
X0183	XG.2001.276-3		Diesel Range Organics	5	RPD	1	NA		03/08/01
X0190-008		**SW846 8260A Purgeable VOCs by GC/MS**							
X0190	XG.2001.300-8	75-34-3	1,1 Dichloroethene	4	RPD	1	NA		03/13/01
X0190	XG.2001.300-8	106-46-7	1,4 Dichlorobenzene	2	RPD	1	NA		03/13/01
X0190	XG.2001.300-8	71-43-2	Benzene	3	RPD	1	NA		03/13/01
X0190	XG.2001.300-8	108-90-7	Chlorobenzene	3	RPD	1	NA		03/13/01
X0190	XG.2001.300-8	108-88-3	Toluene	2	RPD	1	NA		03/13/01
X0190	XG.2001.300-8	79-01-6	Trichloroethene	3	RPD	1	NA		03/13/01

QC Type **MB: Method Blank** QC Matrix **SOLID**

QC Group	Run Sequence	CAS #	Analyte	Result	Units	Dilution Factor	Detection Limit	Code	Run Date
X0163-001		**SW846 8260A Purgeable VOCs by GC/MS**							
X0163	XG.2001.240-1	75-34-3	1,1 Dichloroethane	ND	mg / Kg	1	0.005		02/21/01
	XG.2001.240-1	75-34-3	1,1 Dichloroethene	ND	mg / Kg	1	0.005		02/21/01
X0163	XG.2001.240-1	71-55-6	1,1,1 Trichloroethane	ND	mg / Kg	1	0.005		02/21/01
X0163	XG.2001.240-1	630-20-6	1,1,1,2 Tetrachloroethane	ND	mg / Kg	1	0.005		02/21/01
X0163	XG.2001.240-1	79-00-5	1,1,2 Trichloroethane	ND	mg / Kg	1	0.005		02/21/01
X0163	XG.2001.240-1	79-34-5	1,1,2,2 Tetrachloroethane	ND	mg / Kg	1	0.005		02/21/01
X0163	XG.2001.240-1	106-93-4	1,2 Dibromoethane (EDB)	ND	mg / Kg	1	0.005		02/21/01
X0163	XG.2001.240-1	95-50-1	1,2 Dichlorobenzene	ND	mg / Kg	1	0.005		02/21/01
X0163	XG.2001.240-1	107-06-2	1,2 Dichloroethane	ND	mg / Kg	1	0.005		02/21/01
X0163	XG.2001.240-1	78-87-5	1,2 Dichloropropane	ND	mg / Kg	1	0.005		02/21/01
X0163	XG.2001.240-1	96-18-4	1,2,3 Trichloropropane	ND	mg / Kg	1	0.005		02/21/01
X0163	XG.2001.240-1	95-63-6	1,2,4-Trimethylbenzene	ND	mg / Kg	1	0.005		02/21/01
X0163	XG.2001.240-1	541-73-1	1,3 Dichlorobenzene	ND	mg / Kg	1	0.005		02/21/01
X0163	XG.2001.240-1	108-67-8	1,3,5-Trimethylbenzene	ND	mg / Kg	1	0.005		02/21/01
X0163	XG.2001.240-1	764-41-0	1,4 Dichloro-2-butene	ND	mg / Kg	1	0.05		02/21/01
X0163	XG.2001.240-1	106-46-7	1,4 Dichlorobenzene	ND	mg / Kg	1	0.005		02/21/01
X0163	XG.2001.240-1	78-93-3	2-Butanone (MEK)	ND	mg / Kg	1	0.025		02/21/01
X0163	XG.2001.240-1	110-75-8	2-Chloroethylvinylether	ND	mg / Kg	1	0.025		02/21/01
X0163	XG.2001.240-1	591-78-6	2-Hexanone (MBK)	ND	mg / Kg	1	0.025		02/21/01
X0163	XG.2001.240-1	108-10-1	4-Methyl-2-pentanone (MIBK)	ND	mg / Kg	1	0.025		02/21/01
X0163	XG.2001.240-1	67-64-1	Acetone	ND	mg / Kg	1	0.05		02/21/01
X0163	XG.2001.240-1	107-02-8	Acrolein	ND	mg / Kg	1	0.1		02/21/01
X0163	XG.2001.240-1	107-13-1	Acrylonitrile	ND	mg / Kg	1	0.1		02/21/01
X0163	XG.2001.240-1	71-43-2	Benzene	ND	mg / Kg	1	0.005		02/21/01
X0163	XG.2001.240-1	75-27-4	Bromodichloromethane	ND	mg / Kg	1	0.005		02/21/01
X0163	XG.2001.240-1	75-25-2	Bromoform	ND	mg / Kg	1	0.005		02/21/01
X0163	XG.2001.240-1	74-83-9	Bromomethane	ND	mg / Kg	1	0.025		02/21/01
[illegible]	XG.2001.240-1	75-15-0	Carbon disulfide	ND	mg / Kg	1	0.025		02/21/01

Quality Control Summary

Client: **CH2MHILL**

Project: **0103111** **160660.02.FF.SA**

Explanation of codes

D	*Not applicable due to sample diluti*
L	*Not applicable due to MDL proxim*

X0163	XG.2001.240-1	56-23-5	Carbon tetrachloride	ND	mg / Kg	1	0.005		02/21/01
X0163	XG.2001.240-1	108-90-7	Chlorobenzene	ND	mg / Kg	1	0.005		02/21/01
X0163	XG.2001.240-1	124-48-1	Chlorodibromomethane	ND	mg / Kg	1	0.005		02/21/01
X0163	XG.2001.240-1	75-00-3	Chloroethane	ND	mg / Kg	1	0.025		02/21/01
X0163	XG.2001.240-1	67-66-3	Chloroform	ND	mg / Kg	1	0.005		02/21/01
X0163	XG.2001.240-1	74-87-3	Chloromethane	ND	mg / Kg	1	0.025		02/21/01
X0163	XG.2001.240-1	156-59-2	cis-1,2 dichloroethene	ND	mg / Kg	1	0.005		02/21/01
X0163	XG.2001.240-1	10061-01-5	cis-1,3 dichloropropene	ND	mg / Kg	1	0.005		02/21/01
X0163	XG.2001.240-1	74-95-3	Dibromomethane	ND	mg / Kg	1	0.005		02/21/01
X0163	XG.2001.240-1	97-63-2	Ethyl methacrylate	ND	mg / Kg	1	0.025		02/21/01
X0163	XG.2001.240-1	100-41-4	Ethylbenzene	ND	mg / Kg	1	0.005		02/21/01
X0163	XG.2001.240-1		Freon 113	ND	mg / Kg	1	0.025		02/21/01
X0163	XG.2001.240-1	75-71-8	Freon 12	ND	mg / Kg	1	0.05		02/21/01
X0163	XG.2001.240-1	74-88-4	Iodomethane	ND	mg / Kg	1	0.025		02/21/01
X0163	XG.2001.240-1	1634-04-4	Methyl t-butyl ether (MTBE)	ND	mg / Kg	1	0.005		02/21/01
X0163	XG.2001.240-1	75-09-2	Methylene chloride	ND	mg / Kg	1	0.05		02/21/01
X0163	XG.2001.240-1	91-20-3	Naphthalene	ND	mg / Kg	1	0.025		02/21/01
X0163	XG.2001.240-1	95-47-6	o-Xylene	ND	mg / Kg	1	0.005		02/21/01
X0163	XG.2001.240-1	108-38-3/106-42	p/m Xylenes	ND	mg / Kg	1	0.01		02/21/01
X0163	XG.2001.240-1	100-42-5	Styrene	ND	mg / Kg	1	0.005		02/21/01
X0163	XG.2001.240-1	156-60-5	t-1,2 Dichloroethene	ND	mg / Kg	1	0.005		02/21/01
X0163	XG.2001.240-1	10061-02-6	t-1,3 Dichloropropene	ND	mg / Kg	1	0.005		02/21/01
X0163	XG.2001.240-1	127-18-4	Tetrachloroethene	ND	mg / Kg	1	0.005		02/21/01
X0163	XG.2001.240-1	108-88-3	Toluene	ND	mg / Kg	1	0.005		02/21.
X0163	XG.2001.240-1	79-01-6	Trichloroethene	ND	mg / Kg	1	0.005		02/21/01
X0163	XG.2001.240-1	75-69-4	Trichlorofluoromethane	ND	mg / Kg	1	0.025		02/21/01
X0163	XG.2001.240-1	108-05-4	Vinyl acetate	ND	mg / Kg	1	0.025		02/21/01
X0163	XG.2001.240-1	75-01-4	Vinyl chloride	ND	mg / Kg	1	0.025		02/21/01
X0163-008		**SW846 8260A Purgeable VOCs by GC/MS**							
X0163	XG.2001.240-8	75-34-3	1,1 Dichloroethane	ND	mg / Kg	1	0.005		02/22/01
X0163	XG.2001.240-8	75-34-3	1,1 Dichloroethene	ND	mg / Kg	1	0.005		02/22/01
X0163	XG.2001.240-8	71-55-6	1,1,1 Trichloroethane	ND	mg / Kg	1	0.005		02/22/01
X0163	XG.2001.240-8	630-20-6	1,1,1,2 Tetrachloroethane	ND	mg / Kg	1	0.005		02/22/01
X0163	XG.2001.240-8	79-00-5	1,1,2 Trichloroethane	ND	mg / Kg	1	0.005		02/22/01
X0163	XG.2001.240-8	79-34-5	1,1,2,2 Tetrachloroethane	ND	mg / Kg	1	0.005		02/22/01
X0163	XG.2001.240-8	106-93-4	1,2 Dibromoethane (EDB)	ND	mg / Kg	1	0.005		02/22/01
X0163	XG.2001.240-8	95-50-1	1,2 Dichlorobenzene	ND	mg / Kg	1	0.005		02/22/01
X0163	XG.2001.240-8	107-06-2	1,2 Dichloroethane	ND	mg / Kg	1	0.005		02/22/01
X0163	XG.2001.240-8	78-87-5	1,2 Dichloropropane	ND	mg / Kg	1	0.005		02/22/01
X0163	XG.2001.240-8	96-18-4	1,2,3 Trichloropropane	ND	mg / Kg	1	0.005		02/22/01
X0163	XG.2001.240-8	95-63-6	1,2,4-Trimethylbenzene	ND	mg / Kg	1	0.005		02/22/01
X0163	XG.2001.240-8	541-73-1	1,3 Dichlorobenzene	ND	mg / Kg	1	0.005		02/22/01
X0163	XG.2001.240-8	108-67-8	1,3,5-Trimethylbenzene	ND	mg / Kg	1	0.005		02/22/01
X0163	XG.2001.240-8	764-41-0	1,4 Dichloro-2-butene	ND	mg / Kg	1	0.05		02/22/01
X0163	XG.2001.240-8	106-46-7	1,4 Dichlorobenzene	ND	mg / Kg	1	0.005		02/22/01
X0163	XG.2001.240-8	78-93-3	2-Butanone (MEK)	ND	mg / Kg	1	0.025		02/22/01
X0163	XG.2001.240-8	110-75-8	2-Chloroethylvinylether	ND	mg / Kg	1	0.025		02/22/01
X0163	XG.2001.240-8	591-78-6	2-Hexanone (MBK)	ND	mg / Kg	1	0.025		02/22/01
X0163	XG.2001.240-8	108-10-1	4-Methyl-2-pentanone (MIBK)	ND	mg / Kg	1	0.025		02/22/

Quality Control Summary

Explanation of codes

D	*Not applicable due to sample dilution*
L	*Not applicable due to MDL proximity*

Client: CH2MHILL

Project: 0103111 160660.02.FF.SA

X0163	XG.2001.240-8	67-64-1	Acetone	ND	mg / Kg	1	0.05		02/22/01
X0163	XG.2001.240-8	107-02-8	Acrolein	ND	mg / Kg	1	0.1		02/22/01
X0163	XG.2001.240-8	107-13-1	Acrylonitrile	ND	mg / Kg	1	0.1		02/22/01
X0163	XG.2001.240-8	71-43-2	Benzene	ND	mg / Kg	1	0.005		02/22/01
X0163	XG.2001.240-8	75-27-4	Bromodichloromethane	ND	mg / Kg	1	0.005		02/22/01
X0163	XG.2001.240-8	75-25-2	Bromoform	ND	mg / Kg	1	0.005		02/22/01
X0163	XG.2001.240-8	74-83-9	Bromomethane	ND	mg / Kg	1	0.025		02/22/01
X0163	XG.2001.240-8	75-15-0	Carbon disulfide	ND	mg / Kg	1	0.025		02/22/01
X0163	XG.2001.240-8	56-23-5	Carbon tetrachloride	ND	mg / Kg	1	0.005		02/22/01
X0163	XG.2001.240-8	108-90-7	Chlorobenzene	ND	mg / Kg	1	0.005		02/22/01
X0163	XG.2001.240-8	124-48-1	Chlorodibromomethane	ND	mg / Kg	1	0.005		02/22/01
X0163	XG.2001.240-8	75-00-3	Chloroethane	ND	mg / Kg	1	0.025		02/22/01
X0163	XG.2001.240-8	67-66-3	Chloroform	ND	mg / Kg	1	0.005		02/22/01
X0163	XG.2001.240-8	74-87-3	Chloromethane	ND	mg / Kg	1	0.025		02/22/01
X0163	XG.2001.240-8	156-59-2	cis-1,2 dichloroethene	ND	mg / Kg	1	0.005		02/22/01
X0163	XG.2001.240-8	10061-01-5	cis-1,3 dichloropropene	ND	mg / Kg	1	0.005		02/22/01
X0163	XG.2001.240-8	74-95-3	Dibromomethane	ND	mg / Kg	1	0.005		02/22/01
X0163	XG.2001.240-8	97-63-2	Ethyl methacrylate	ND	mg / Kg	1	0.025		02/22/01
X0163	XG.2001.240-8	100-41-4	Ethylbenzene	ND	mg / Kg	1	0.005		02/22/01
X0163	XG.2001.240-8		Freon 113	ND	mg / Kg	1	0.025		02/22/01
X0163	XG.2001.240-8	75-71-8	Freon 12	ND	mg / Kg	1	0.05		02/22/01
X0163	XG.2001.240-8	74-88-4	Iodomethane	ND	mg / Kg	1	0.025		02/22/01
X0163	XG.2001.240-8	1634-04-4	Methyl t-butyl ether (MTBE)	ND	mg / Kg	1	0.005		02/22/01
[illegible]	XG.2001.240-8	75-09-2	Methylene chloride	ND	mg / Kg	1	0.05		02/22/01
[illegible]	XG.2001.240-8	91-20-3	Naphthalene	ND	mg / Kg	1	0.025		02/22/01
X0163	XG.2001.240-8	95-47-6	o-Xylene	ND	mg / Kg	1	0.005		02/22/01
X0163	XG.2001.240-8	108-38-3/106-42	p/m Xylenes	ND	mg / Kg	1	0.01		02/22/01
X0163	XG.2001.240-8	100-42-5	Styrene	ND	mg / Kg	1	0.005		02/22/01
X0163	XG.2001.240-8	156-60-5	t-1,2 Dichloroethene	ND	mg / Kg	1	0.005		02/22/01
X0163	XG.2001.240-8	10061-02-6	t-1,3 Dichloropropene	ND	mg / Kg	1	0.005		02/22/01
X0163	XG.2001.240-8	127-18-4	Tetrachloroethene	ND	mg / Kg	1	0.005		02/22/01
X0163	XG.2001.240-8	108-88-3	Toluene	ND	mg / Kg	1	0.005		02/22/01
X0163	XG.2001.240-8	79-01-6	Trichloroethene	ND	mg / Kg	1	0.005		02/22/01
X0163	XG.2001.240-8	75-69-4	Trichlorofluoromethane	ND	mg / Kg	1	0.025		02/22/01
X0163	XG.2001.240-8	108-05-4	Vinyl acetate	ND	mg / Kg	1	0.025		02/22/01
X0163	XG.2001.240-8	75-01-4	Vinyl chloride	ND	mg / Kg	1	0.025		02/22/01

X0163-017 **SW846 8260A Purgeable VOCs by GC/MS**

X0163	XG.2001.240-16	75-34-3	1,1 Dichloroethane	ND	mg / Kg	1	0.005		02/23/01
X0163	XG.2001.240-16	75-34-3	1,1 Dichloroethene	ND	mg / Kg	1	0.005		02/23/01
X0163	XG.2001.240-16	71-55-6	1,1,1 Trichloroethane	ND	mg / Kg	1	0.005		02/23/01
X0163	XG.2001.240-16	630-20-6	1,1,1,2 Tetrachloroethane	ND	mg / Kg	1	0.005		02/23/01
X0163	XG.2001.240-16	79-00-5	1,1,2 Trichloroethane	ND	mg / Kg	1	0.005		02/23/01
X0163	XG.2001.240-16	79-34-5	1,1,2,2 Tetrachloroethane	ND	mg / Kg	1	0.005		02/23/01
X0163	XG.2001.240-16	106-93-4	1,2 Dibromoethane (EDB)	ND	mg / Kg	1	0.005		02/23/01
X0163	XG.2001.240-16	95-50-1	1,2 Dichlorobenzene	ND	mg / Kg	1	0.005		02/23/01
X0163	XG.2001.240-16	107-06-2	1,2 Dichloroethane	ND	mg / Kg	1	0.005		02/23/01
X0163	XG.2001.240-16	78-87-5	1,2 Dichloropropane	ND	mg / Kg	1	0.005		02/23/01
X0163	XG.2001.240-16	96-18-4	1,2,3 Trichloropropane	ND	mg / Kg	1	0.005		02/23/01
[illegible]	XG.2001.240-16	95-63-6	1,2,4-Trimethylbenzene	ND	mg / Kg	1	0.005		02/23/01

Quality Control Summary

Client: **CH2MHILL**

Project: **0103111** **160660.02.FF.SA**

Explanation of codes

D	*Not applicable due to sample dilutio*
L	*Not applicable due to MDL proximi*

X0163	XG.2001.240-16	541-73-1	1,3 Dichlorobenzene	ND	mg / Kg	1	0.005		02/23/01
X0163	XG.2001.240-16	108-67-8	1,3,5-Trimethylbenzene	ND	mg / Kg	1	0.005		02/23/01
X0163	XG.2001.240-16	764-41-0	1,4 Dichloro-2-butene	ND	mg / Kg	1	0.05		02/23/01
X0163	XG.2001.240-16	106-46-7	1,4 Dichlorobenzene	ND	mg / Kg	1	0.005		02/23/01
X0163	XG.2001.240-16	78-93-3	2-Butanone (MEK)	ND	mg / Kg	1	0.025		02/23/01
X0163	XG.2001.240-16	110-75-8	2-Chloroethylvinylether	ND	mg / Kg	1	0.025		02/23/01
X0163	XG.2001.240-16	591-78-6	2-Hexanone (MBK)	ND	mg / Kg	1	0.025		02/23/01
X0163	XG.2001.240-16	108-10-1	4-Methyl-2-pentanone (MIBK)	ND	mg / Kg	1	0.025		02/23/01
X0163	XG.2001.240-16	67-64-1	Acetone	ND	mg / Kg	1	0.05		02/23/01
X0163	XG.2001.240-16	107-02-8	Acrolein	ND	mg / Kg	1	0.1		02/23/01
X0163	XG.2001.240-16	107-13-1	Acrylonitrile	ND	mg / Kg	1	0.1		02/23/01
X0163	XG.2001.240-16	71-43-2	Benzene	ND	mg / Kg	1	0.005		02/23/01
X0163	XG.2001.240-16	75-27-4	Bromodichloromethane	ND	mg / Kg	1	0.005		02/23/01
X0163	XG.2001.240-16	75-25-2	Bromoform	ND	mg / Kg	1	0.005		02/23/01
X0163	XG.2001.240-16	74-83-9	Bromomethane	ND	mg / Kg	1	0.025		02/23/01
X0163	XG.2001.240-16	75-15-0	Carbon disulfide	ND	mg / Kg	1	0.025		02/23/01
X0163	XG.2001.240-16	56-23-5	Carbon tetrachloride	ND	mg / Kg	1	0.005		02/23/01
X0163	XG.2001.240-16	108-90-7	Chlorobenzene	ND	mg / Kg	1	0.005		02/23/01
X0163	XG.2001.240-16	124-48-1	Chlorodibromomethane	ND	mg / Kg	1	0.005		02/23/01
X0163	XG.2001.240-16	75-00-3	Chloroethane	ND	mg / Kg	1	0.025		02/23/01
X0163	XG.2001.240-16	67-66-3	Chloroform	ND	mg / Kg	1	0.005		02/23/01
X0163	XG.2001.240-16	74-87-3	Chloromethane	ND	mg / Kg	1	0.025		02/23/01
X0163	XG.2001.240-16	156-59-2	cis-1,2 dichloroethene	ND	mg / Kg	1	0.005		02/23/01
X0163	XG.2001.240-16	10061-01-5	cis-1,3 dichloropropene	ND	mg / Kg	1	0.005		02/23/
X0163	XG.2001.240-16	74-95-3	Dibromomethane	ND	mg / Kg	1	0.005		02/23/
X0163	XG.2001.240-16	97-63-2	Ethyl methacrylate	ND	mg / Kg	1	0.025		02/23/01
X0163	XG.2001.240-16	100-41-4	Ethylbenzene	ND	mg / Kg	1	0.005		02/23/01
X0163	XG.2001.240-16		Freon 113	ND	mg / Kg	1	0.025		02/23/01
X0163	XG.2001.240-16	75-71-8	Freon 12	ND	mg / Kg	1	0.05		02/23/01
X0163	XG.2001.240-16	74-88-4	Iodomethane	ND	mg / Kg	1	0.025		02/23/01
X0163	XG.2001.240-16	1634-04-4	Methyl t-butyl ether (MTBE)	ND	mg / Kg	1	0.005		02/23/01
X0163	XG.2001.240-16	75-09-2	Methylene chloride	ND	mg / Kg	1	0.05		02/23/01
X0163	XG.2001.240-16	91-20-3	Naphthalene	ND	mg / Kg	1	0.025		02/23/01
X0163	XG.2001.240-16	95-47-6	o-Xylene	ND	mg / Kg	1	0.005		02/23/01
X0163	XG.2001.240-16	108-38-3/106-42	p/m Xylenes	ND	mg / Kg	1	0.01		02/23/01
X0163	XG.2001.240-16	100-42-5	Styrene	ND	mg / Kg	1	0.005		02/23/01
X0163	XG.2001.240-16	156-60-5	t-1,2 Dichloroethene	ND	mg / Kg	1	0.005		02/23/01
X0163	XG.2001.240-16	10061-02-6	t-1,3 Dichloropropene	ND	mg / Kg	1	0.005		02/23/01
X0163	XG.2001.240-16	127-18-4	Tetrachloroethene	ND	mg / Kg	1	0.005		02/23/01
X0163	XG.2001.240-16	108-88-3	Toluene	ND	mg / Kg	1	0.005		02/23/01
X0163	XG.2001.240-16	79-01-6	Trichloroethene	ND	mg / Kg	1	0.005		02/23/01
X0163	XG.2001.240-16	75-69-4	Trichlorofluoromethane	ND	mg / Kg	1	0.025		02/23/01
X0163	XG.2001.240-16	108-05-4	Vinyl acetate	ND	mg / Kg	1	0.025		02/23/01
X0163	XG.2001.240-16	75-01-4	Vinyl chloride	ND	mg / Kg	1	0.025		02/23/01
X0163-034		**SW846 8260A Purgeable VOCs by GC/MS**							
X0163	XG.2001.240-26	75-34-3	1,1 Dichloroethane	ND	mg / Kg	1	0.005		02/26/01
X0163	XG.2001.240-26	75-34-3	1,1 Dichloroethene	ND	mg / Kg	1	0.005		02/26/01
X0163	XG.2001.240-26	71-55-6	1,1,1 Trichloroethane	ND	mg / Kg	1	0.005		02/26/01
X0163	XG.2001.240-26	630-20-6	1,1,1,2 Tetrachloroethane	ND	mg / Kg	1	0.005		02/26/

Quality Control Summary

Explanation of codes

D	*Not applicable due to sample dilution*
L	*Not applicable due to MDL proximity*

Client: **CH2MHILL**

Project: **0103111** **160660.02.FF.SA**

X0163	XG.2001.240-26	79-00-5	1,1,2 Trichloroethane	ND	mg / Kg	1	0.005		02/26/01
X0163	XG.2001.240-26	79-34-5	1,1,2,2 Tetrachloroethane	ND	mg / Kg	1	0.005		02/26/01
X0163	XG.2001.240-26	106-93-4	1,2 Dibromoethane (EDB)	ND	mg / Kg	1	0.005		02/26/01
X0163	XG.2001.240-26	95-50-1	1,2 Dichlorobenzene	ND	mg / Kg	1	0.005		02/26/01
X0163	XG.2001.240-26	107-06-2	1,2 Dichloroethane	ND	mg / Kg	1	0.005		02/26/01
X0163	XG.2001.240-26	78-87-5	1,2 Dichloropropane	ND	mg / Kg	1	0.005		02/26/01
X0163	XG.2001.240-26	96-18-4	1,2,3 Trichloropropane	ND	mg / Kg	1	0.005		02/26/01
X0163	XG.2001.240-26	95-63-6	1,2,4-Trimethylbenzene	ND	mg / Kg	1	0.005		02/26/01
X0163	XG.2001.240-26	541-73-1	1,3 Dichlorobenzene	ND	mg / Kg	1	0.005		02/26/01
X0163	XG.2001.240-26	108-67-8	1,3,5-Trimethylbenzene	ND	mg / Kg	1	0.005		02/26/01
X0163	XG.2001.240-26	764-41-0	1,4 Dichloro-2-butene	ND	mg / Kg	1	0.05		02/26/01
X0163	XG.2001.240-26	106-46-7	1,4 Dichlorobenzene	ND	mg / Kg	1	0.005		02/26/01
X0163	XG.2001.240-26	78-93-3	2-Butanone (MEK)	ND	mg / Kg	1	0.025		02/26/01
X0163	XG.2001.240-26	110-75-8	2-Chloroethylvinylether	ND	mg / Kg	1	0.025		02/26/01
X0163	XG.2001.240-26	591-78-6	2-Hexanone (MBK)	ND	mg / Kg	1	0.025		02/26/01
X0163	XG.2001.240-26	108-10-1	4-Methyl-2-pentanone (MIBK)	ND	mg / Kg	1	0.025		02/26/01
X0163	XG.2001.240-26	67-64-1	Acetone	ND	mg / Kg	1	0.05		02/26/01
X0163	XG.2001.240-26	107-02-8	Acrolein	ND	mg / Kg	1	0.1		02/26/01
X0163	XG.2001.240-26	107-13-1	Acrylonitrile	ND	mg / Kg	1	0.1		02/26/01
X0163	XG.2001.240-26	71-43-2	Benzene	ND	mg / Kg	1	0.005		02/26/01
X0163	XG.2001.240-26	75-27-4	Bromodichloromethane	ND	mg / Kg	1	0.005		02/26/01
X0163	XG.2001.240-26	75-25-2	Bromoform	ND	mg / Kg	1	0.005		02/26/01
X0163	XG.2001.240-26	74-83-9	Bromomethane	ND	mg / Kg	1	0.025		02/26/01
[illegible]	XG.2001.240-26	75-15-0	Carbon disulfide	ND	mg / Kg	1	0.025		02/26/01
[illegible]	XG.2001.240-26	56-23-5	Carbon tetrachloride	ND	mg / Kg	1	0.005		02/26/01
X0163	XG.2001.240-26	108-90-7	Chlorobenzene	ND	mg / Kg	1	0.005		02/26/01
X0163	XG.2001.240-26	124-48-1	Chlorodibromomethane	ND	mg / Kg	1	0.005		02/26/01
X0163	XG.2001.240-26	75-00-3	Chloroethane	ND	mg / Kg	1	0.025		02/26/01
X0163	XG.2001.240-26	67-66-3	Chloroform	ND	mg / Kg	1	0.005		02/26/01
X0163	XG.2001.240-26	74-87-3	Chloromethane	ND	mg / Kg	1	0.025		02/26/01
X0163	XG.2001.240-26	156-59-2	cis-1,2 dichloroethene	ND	mg / Kg	1	0.005		02/26/01
X0163	XG.2001.240-26	10061-01-5	cis-1,3 dichloropropene	ND	mg / Kg	1	0.005		02/26/01
X0163	XG.2001.240-26	74-95-3	Dibromomethane	ND	mg / Kg	1	0.005		02/26/01
X0163	XG.2001.240-26	97-63-2	Ethyl methacrylate	ND	mg / Kg	1	0.025		02/26/01
X0163	XG.2001.240-26	100-41-4	Ethylbenzene	ND	mg / Kg	1	0.005		02/26/01
X0163	XG.2001.240-26		Freon 113	ND	mg / Kg	1	0.025		02/26/01
X0163	XG.2001.240-26	75-71-8	Freon 12	ND	mg / Kg	1	0.05		02/26/01
X0163	XG.2001.240-26	74-88-4	Iodomethane	ND	mg / Kg	1	0.025		02/26/01
X0163	XG.2001.240-26	1634-04-4	Methyl t-butyl ether (MTBE)	ND	mg / Kg	1	0.005		02/26/01
X0163	XG.2001.240-26	75-09-2	Methylene chloride	ND	mg / Kg	1	0.05		02/26/01
X0163	XG.2001.240-26	91-20-3	Naphthalene	ND	mg / Kg	1	0.025		02/26/01
X0163	XG.2001.240-26	95-47-6	o-Xylene	ND	mg / Kg	1	0.005		02/26/01
X0163	XG.2001.240-26	108-38-3/106-42	p/m Xylenes	ND	mg / Kg	1	0.01		02/26/01
X0163	XG.2001.240-26	100-42-5	Styrene	ND	mg / Kg	1	0.005		02/26/01
X0163	XG.2001.240-26	156-60-5	t-1,2 Dichloroethene	ND	mg / Kg	1	0.005		02/26/01
X0163	XG.2001.240-26	10061-02-6	t-1,3 Dichloropropene	ND	mg / Kg	1	0.005		02/26/01
X0163	XG.2001.240-26	127-18-4	Tetrachloroethene	ND	mg / Kg	1	0.005		02/26/01
X0163	XG.2001.240-26	108-88-3	Toluene	ND	mg / Kg	1	0.005		02/26/01
[illegible]	XG.2001.240-26	79-01-6	Trichloroethene	ND	mg / Kg	1	0.005		02/26/01
[illegible]	XG.2001.240-26	75-69-4	Trichlorofluoromethane	ND	mg / Kg	1	0.025		02/26/01

Quality Control Summary

Client: **CH2MHILL**

Project: **0103111** **160660.02.FF.SA**

Explanation of codes

D	*Not applicable due to sample dilut*
L	*Not applicable due to MDL proxin*

X0163	XG.2001.240-26	108-05-4	Vinyl acetate	ND	mg / Kg	1	0.025		02/26/01
X0163	XG.2001.240-26	75-01-4	Vinyl chloride	ND	mg / Kg	1	0.025		02/26/01
X0163-035		**SW846 8260A Purgeable VOCs by GC/MS**							
X0163	XG.2001.242-1	75-34-3	1,1 Dichloroethane	ND	mg / Kg	1	0.005		02/27/01
X0163	XG.2001.242-1	75-34-3	1,1 Dichloroethene	ND	mg / Kg	1	0.005		02/27/01
X0163	XG.2001.242-1	71-55-6	1,1,1 Trichloroethane	ND	mg / Kg	1	0.005		02/27/01
X0163	XG.2001.242-1	630-20-6	1,1,1,2 Tetrachloroethane	ND	mg / Kg	1	0.005		02/27/01
X0163	XG.2001.242-1	79-00-5	1,1,2 Trichloroethane	ND	mg / Kg	1	0.005		02/27/01
X0163	XG.2001.242-1	79-34-5	1,1,2,2 Tetrachloroethane	ND	mg / Kg	1	0.005		02/27/01
X0163	XG.2001.242-1	106-93-4	1,2 Dibromoethane (EDB)	ND	mg / Kg	1	0.005		02/27/01
X0163	XG.2001.242-1	95-50-1	1,2 Dichlorobenzene	ND	mg / Kg	1	0.005		02/27/01
X0163	XG.2001.242-1	107-06-2	1,2 Dichloroethane	ND	mg / Kg	1	0.005		02/27/01
X0163	XG.2001.242-1	78-87-5	1,2 Dichloropropane	ND	mg / Kg	1	0.005		02/27/01
X0163	XG.2001.242-1	96-18-4	1,2,3 Trichloropropane	ND	mg / Kg	1	0.005		02/27/01
X0163	XG.2001.242-1	95-63-6	1,2,4-Trimethylbenzene	ND	mg / Kg	1	0.005		02/27/01
X0163	XG.2001.242-1	541-73-1	1,3 Dichlorobenzene	ND	mg / Kg	1	0.005		02/27/01
X0163	XG.2001.242-1	108-67-8	1,3,5-Trimethylbenzene	ND	mg / Kg	1	0.005		02/27/01
X0163	XG.2001.242-1	764-41-0	1,4 Dichloro-2-butene	ND	mg / Kg	1	0.05		02/27/01
X0163	XG.2001.242-1	106-46-7	1,4 Dichlorobenzene	ND	mg / Kg	1	0.005		02/27/01
X0163	XG.2001.242-1	78-93-3	2-Butanone (MEK)	ND	mg / Kg	1	0.025		02/27/01
X0163	XG.2001.242-1	110-75-8	2-Chloroethylvinylether	ND	mg / Kg	1	0.025		02/27/01
X0163	XG.2001.242-1	591-78-6	2-Hexanone (MBK)	ND	mg / Kg	1	0.025		02/27/01
X0163	XG.2001.242-1	108-10-1	4-Methyl-2-pentanone (MIBK)	ND	mg / Kg	1	0.025		02/27/01
X0163	XG.2001.242-1	67-64-1	Acetone	ND	mg / Kg	1	0.05		02/27
X0163	XG.2001.242-1	107-02-8	Acrolein	ND	mg / Kg	1	0.1		02/27/
X0163	XG.2001.242-1	107-13-1	Acrylonitrile	ND	mg / Kg	1	0.1		02/27/01
X0163	XG.2001.242-1	71-43-2	Benzene	ND	mg / Kg	1	0.005		02/27/01
X0163	XG.2001.242-1	75-27-4	Bromodichloromethane	ND	mg / Kg	1	0.005		02/27/01
X0163	XG.2001.242-1	75-25-2	Bromoform	ND	mg / Kg	1	0.005		02/27/01
X0163	XG.2001.242-1	74-83-9	Bromomethane	ND	mg / Kg	1	0.025		02/27/01
X0163	XG.2001.242-1	75-15-0	Carbon disulfide	ND	mg / Kg	1	0.025		02/27/01
X0163	XG.2001.242-1	56-23-5	Carbon tetrachloride	ND	mg / Kg	1	0.005		02/27/01
X0163	XG.2001.242-1	108-90-7	Chlorobenzene	ND	mg / Kg	1	0.005		02/27/01
X0163	XG.2001.242-1	124-48-1	Chlorodibromomethane	ND	mg / Kg	1	0.005		02/27/01
X0163	XG.2001.242-1	75-00-3	Chloroethane	ND	mg / Kg	1	0.025		02/27/01
X0163	XG.2001.242-1	67-66-3	Chloroform	ND	mg / Kg	1	0.005		02/27/01
X0163	XG.2001.242-1	74-87-3	Chloromethane	ND	mg / Kg	1	0.025		02/27/01
X0163	XG.2001.242-1	156-59-2	cis-1,2 dichloroethene	ND	mg / Kg	1	0.005		02/27/01
X0163	XG.2001.242-1	10061-01-5	cis-1,3 dichloropropene	ND	mg / Kg	1	0.005		02/27/01
X0163	XG.2001.242-1	74-95-3	Dibromomethane	ND	mg / Kg	1	0.005		02/27/01
X0163	XG.2001.242-1	97-63-2	Ethyl methacrylate	ND	mg / Kg	1	0.025		02/27/01
X0163	XG.2001.242-1	100-41-4	Ethylbenzene	ND	mg / Kg	1	0.005		02/27/01
X0163	XG.2001.242-1		Freon 113	ND	mg / Kg	1	0.025		02/27/01
X0163	XG.2001.242-1	75-71-8	Freon 12	ND	mg / Kg	1	0.05		02/27/01
X0163	XG.2001.242-1	74-88-4	Iodomethane	ND	mg / Kg	1	0.025		02/27/01
X0163	XG.2001.242-1	1634-04-4	Methyl t-butyl ether (MTBE)	ND	mg / Kg	1	0.005		02/27/01
X0163	XG.2001.242-1	75-09-2	Methylene chloride	ND	mg / Kg	1	0.05		02/27/01
X0163	XG.2001.242-1	91-20-3	Naphthalene	ND	mg / Kg	1	0.025		02/27/01
X0163	XG.2001.242-1	95-47-6	o-Xylene	ND	mg / Kg	1	0.005		02/27/0

Quality Control Summary

Explanation of codes

D	*Not applicable due to sample dilution*
L	*Not applicable due to MDL proximity*

Client: CH2MHILL

Project: 0103111 160660.02.FF.SA

X0163	XG.2001.242-1	108-38-3/106-42	p/m Xylenes	ND	mg / Kg	1	0.01		02/27/01
X0163	XG.2001.242-1	100-42-5	Styrene	ND	mg / Kg	1	0.005		02/27/01
X0163	XG.2001.242-1	156-60-5	t-1,2 Dichloroethene	ND	mg / Kg	1	0.005		02/27/01
X0163	XG.2001.242-1	10061-02-6	t-1,3 Dichloropropene	ND	mg / Kg	1	0.005		02/27/01
X0163	XG.2001.242-1	127-18-4	Tetrachloroethene	ND	mg / Kg	1	0.005		02/27/01
X0163	XG.2001.242-1	108-88-3	Toluene	ND	mg / Kg	1	0.005		02/27/01
X0163	XG.2001.242-1	79-01-6	Trichloroethene	ND	mg / Kg	1	0.005		02/27/01
X0163	XG.2001.242-1	75-69-4	Trichlorofluoromethane	ND	mg / Kg	1	0.025		02/27/01
X0163	XG.2001.242-1	108-05-4	Vinyl acetate	ND	mg / Kg	1	0.025		02/27/01
X0163	XG.2001.242-1	75-01-4	Vinyl chloride	ND	mg / Kg	1	0.025		02/27/01
X0163-042		**SW846 8260A Purgeable VOCs by GC/MS**							
X0163	XG.2001.273-1	75-34-3	1,1 Dichloroethane	ND	mg / Kg	1	0.005		03/06/01
X0163	XG.2001.273-1	75-34-3	1,1 Dichloroethene	ND	mg / Kg	1	0.005		03/06/01
X0163	XG.2001.273-1	71-55-6	1,1,1 Trichloroethane	ND	mg / Kg	1	0.005		03/06/01
X0163	XG.2001.273-1	630-20-6	1,1,1,2 Tetrachloroethane	ND	mg / Kg	1	0.005		03/06/01
X0163	XG.2001.273-1	79-00-5	1,1,2 Trichloroethane	ND	mg / Kg	1	0.005		03/06/01
X0163	XG.2001.273-1	79-34-5	1,1,2,2 Tetrachloroethane	ND	mg / Kg	1	0.005		03/06/01
X0163	XG.2001.273-1	106-93-4	1,2 Dibromoethane (EDB)	ND	mg / Kg	1	0.005		03/06/01
X0163	XG.2001.273-1	95-50-1	1,2 Dichlorobenzene	ND	mg / Kg	1	0.005		03/06/01
X0163	XG.2001.273-1	107-06-2	1,2 Dichloroethane	ND	mg / Kg	1	0.005		03/06/01
X0163	XG.2001.273-1	78-87-5	1,2 Dichloropropane	ND	mg / Kg	1	0.005		03/06/01
X0163	XG.2001.273-1	96-18-4	1,2,3 Trichloropropane	ND	mg / Kg	1	0.005		03/06/01
	XG.2001.273-1	95-63-6	1,2,4-Trimethylbenzene	ND	mg / Kg	1	0.005		03/06/01
X0163	XG.2001.273-1	541-73-1	1,3 Dichlorobenzene	ND	mg / Kg	1	0.005		03/06/01
X0163	XG.2001.273-1	108-67-8	1,3,5-Trimethylbenzene	ND	mg / Kg	1	0.005		03/06/01
X0163	XG.2001.273-1	764-41-0	1,4 Dichloro-2-butene	ND	mg / Kg	1	0.05		03/06/01
X0163	XG.2001.273-1	106-46-7	1,4 Dichlorobenzene	ND	mg / Kg	1	0.005		03/06/01
X0163	XG.2001.273-1	78-93-3	2-Butanone (MEK)	ND	mg / Kg	1	0.025		03/06/01
X0163	XG.2001.273-1	110-75-8	2-Chloroethylvinylether	ND	mg / Kg	1	0.025		03/06/01
X0163	XG.2001.273-1	591-78-6	2-Hexanone (MBK)	ND	mg / Kg	1	0.025		03/06/01
X0163	XG.2001.273-1	108-10-1	4-Methyl-2-pentanone (MIBK)	ND	mg / Kg	1	0.025		03/06/01
X0163	XG.2001.273-1	67-64-1	Acetone	ND	mg / Kg	1	0.05		03/06/01
X0163	XG.2001.273-1	107-02-8	Acrolein	ND	mg / Kg	1	0.1		03/06/01
X0163	XG.2001.273-1	107-13-1	Acrylonitrile	ND	mg / Kg	1	0.1		03/06/01
X0163	XG.2001.273-1	71-43-2	Benzene	ND	mg / Kg	1	0.005		03/06/01
X0163	XG.2001.273-1	75-27-4	Bromodichloromethane	ND	mg / Kg	1	0.005		03/06/01
X0163	XG.2001.273-1	75-25-2	Bromoform	ND	mg / Kg	1	0.005		03/06/01
X0163	XG.2001.273-1	74-83-9	Bromomethane	ND	mg / Kg	1	0.025		03/06/01
X0163	XG.2001.273-1	75-15-0	Carbon disulfide	ND	mg / Kg	1	0.025		03/06/01
X0163	XG.2001.273-1	56-23-5	Carbon tetrachloride	ND	mg / Kg	1	0.005		03/06/01
X0163	XG.2001.273-1	108-90-7	Chlorobenzene	ND	mg / Kg	1	0.005		03/06/01
X0163	XG.2001.273-1	124-48-1	Chlorodibromomethane	ND	mg / Kg	1	0.005		03/06/01
X0163	XG.2001.273-1	75-00-3	Chloroethane	ND	mg / Kg	1	0.025		03/06/01
X0163	XG.2001.273-1	67-66-3	Chloroform	ND	mg / Kg	1	0.005		03/06/01
X0163	XG.2001.273-1	74-87-3	Chloromethane	ND	mg / Kg	1	0.025		03/06/01
X0163	XG.2001.273-1	156-59-2	cis-1,2 dichloroethene	ND	mg / Kg	1	0.005		03/06/01
X0163	XG.2001.273-1	10061-01-5	cis-1,3 dichloropropene	ND	mg / Kg	1	0.005		03/06/01
X0163	XG.2001.273-1	74-95-3	Dibromomethane	ND	mg / Kg	1	0.005		03/06/01
	XG.2001.273-1	97-63-2	Ethyl methacrylate	ND	mg / Kg	1	0.025		03/06/01

Quality Control Summary

Client: **CH2MHILL**

Project: **0103111** **160660.02.FF.SA**

Explanation of codes

D	*Not applicable due to sample dilut*
L	*Not applicable due to MDL proxim*

X0163	XG.2001.273-1	100-41-4	Ethylbenzene	ND	mg / Kg	1	0.005		03/06/01
X0163	XG.2001.273-1		Freon 113	ND	mg / Kg	1	0.025		03/06/01
X0163	XG.2001.273-1	75-71-8	Freon 12	ND	mg / Kg	1	0.05		03/06/01
X0163	XG.2001.273-1	74-88-4	Iodomethane	ND	mg / Kg	1	0.025		03/06/01
X0163	XG.2001.273-1	1634-04-4	Methyl t-butyl ether (MTBE)	ND	mg / Kg	1	0.005		03/06/01
X0163	XG.2001.273-1	75-09-2	Methylene chloride	ND	mg / Kg	1	0.05		03/06/01
X0163	XG.2001.273-1	91-20-3	Naphthalene	ND	mg / Kg	1	0.025		03/06/01
X0163	XG.2001.273-1	95-47-6	o-Xylene	ND	mg / Kg	1	0.005		03/06/01
X0163	XG.2001.273-1	108-38-3/106-42	p/m Xylenes	ND	mg / Kg	1	0.01		03/06/01
X0163	XG.2001.273-1	100-42-5	Styrene	ND	mg / Kg	1	0.005		03/06/01
X0163	XG.2001.273-1	156-60-5	t-1,2 Dichloroethene	ND	mg / Kg	1	0.005		03/06/01
X0163	XG.2001.273-1	10061-02-6	t-1,3 Dichloropropene	ND	mg / Kg	1	0.005		03/06/01
X0163	XG.2001.273-1	127-18-4	Tetrachloroethene	ND	mg / Kg	1	0.005		03/06/01
X0163	XG.2001.273-1	108-88-3	Toluene	ND	mg / Kg	1	0.005		03/06/01
X0163	XG.2001.273-1	79-01-6	Trichloroethene	ND	mg / Kg	1	0.005		03/06/01
X0163	XG.2001.273-1	75-69-4	Trichlorofluoromethane	ND	mg / Kg	1	0.025		03/06/01
X0163	XG.2001.273-1	108-05-4	Vinyl acetate	ND	mg / Kg	1	0.025		03/06/01
X0163	XG.2001.273-1	75-01-4	Vinyl chloride	ND	mg / Kg	1	0.025		03/06/01

X0163-050 **SW846 8260A Purgeable VOCs by GC/MS**

X0163	XG.2001.273-7	75-34-3	1,1 Dichloroethane	ND	mg / Kg	1	0.005		03/08/01
X0163	XG.2001.273-7	75-34-3	1,1 Dichloroethene	ND	mg / Kg	1	0.005		03/08/01
X0163	XG.2001.273-7	71-55-6	1,1,1 Trichloroethane	ND	mg / Kg	1	0.005		03/08/01
X0163	XG.2001.273-7	630-20-6	1,1,1,2 Tetrachloroethane	ND	mg / Kg	1	0.005		03/08
X0163	XG.2001.273-7	79-00-5	1,1,2 Trichloroethane	ND	mg / Kg	1	0.005		03/0
X0163	XG.2001.273-7	79-34-5	1,1,2,2 Tetrachloroethane	ND	mg / Kg	1	0.005		03/08/01
X0163	XG.2001.273-7	106-93-4	1,2 Dibromoethane (EDB)	ND	mg / Kg	1	0.005		03/08/01
X0163	XG.2001.273-7	95-50-1	1,2 Dichlorobenzene	ND	mg / Kg	1	0.005		03/08/01
X0163	XG.2001.273-7	107-06-2	1,2 Dichloroethane	ND	mg / Kg	1	0.005		03/08/01
X0163	XG.2001.273-7	78-87-5	1,2 Dichloropropane	ND	mg / Kg	1	0.005		03/08/01
X0163	XG.2001.273-7	96-18-4	1,2,3 Trichloropropane	ND	mg / Kg	1	0.005		03/08/01
X0163	XG.2001.273-7	95-63-6	1,2,4-Trimethylbenzene	ND	mg / Kg	1	0.005		03/08/01
X0163	XG.2001.273-7	541-73-1	1,3 Dichlorobenzene	ND	mg / Kg	1	0.005		03/08/01
X0163	XG.2001.273-7	108-67-8	1,3,5-Trimethylbenzene	ND	mg / Kg	1	0.005		03/08/01
X0163	XG.2001.273-7	764-41-0	1,4 Dichloro-2-butene	ND	mg / Kg	1	0.05		03/08/01
X0163	XG.2001.273-7	106-46-7	1,4 Dichlorobenzene	ND	mg / Kg	1	0.005		03/08/01
X0163	XG.2001.273-7	78-93-3	2-Butanone (MEK)	ND	mg / Kg	1	0.025		03/08/01
X0163	XG.2001.273-7	110-75-8	2-Chloroethylvinylether	ND	mg / Kg	1	0.025		03/08/01
X0163	XG.2001.273-7	591-78-6	2-Hexanone (MBK)	ND	mg / Kg	1	0.025		03/08/01
X0163	XG.2001.273-7	108-10-1	4-Methyl-2-pentanone (MIBK)	ND	mg / Kg	1	0.025		03/08/01
X0163	XG.2001.273-7	67-64-1	Acetone	ND	mg / Kg	1	0.05		03/08/01
X0163	XG.2001.273-7	107-02-8	Acrolein	ND	mg / Kg	1	0.1		03/08/01
X0163	XG.2001.273-7	107-13-1	Acrylonitrile	ND	mg / Kg	1	0.1		03/08/01
X0163	XG.2001.273-7	71-43-2	Benzene	ND	mg / Kg	1	0.005		03/08/01
X0163	XG.2001.273-7	75-27-4	Bromodichloromethane	ND	mg / Kg	1	0.005		03/08/01
X0163	XG.2001.273-7	75-25-2	Bromoform	ND	mg / Kg	1	0.005		03/08/01
X0163	XG.2001.273-7	74-83-9	Bromomethane	ND	mg / Kg	1	0.025		03/08/01
X0163	XG.2001.273-7	75-15-0	Carbon disulfide	ND	mg / Kg	1	0.025		03/08/01
X0163	XG.2001.273-7	56-23-5	Carbon tetrachloride	ND	mg / Kg	1	0.005		03/08/01
X0163	XG.2001.273-7	108-90-7	Chlorobenzene	ND	mg / Kg	1	0.005		03/0

Quality Control Summary

Client: CH2MHILL

Project: 0103111 160660.02.FF.SA

Explanation of codes

D	*Not applicable due to sample dilution*
L	*Not applicable due to MDL proximity*

X0163	XG.2001.273-7	124-48-1	Chlorodibromomethane	ND	mg / Kg	1	0.005		03/08/01
X0163	XG.2001.273-7	75-00-3	Chloroethane	ND	mg / Kg	1	0.025		03/08/01
X0163	XG.2001.273-7	67-66-3	Chloroform	ND	mg / Kg	1	0.005		03/08/01
X0163	XG.2001.273-7	74-87-3	Chloromethane	ND	mg / Kg	1	0.025		03/08/01
X0163	XG.2001.273-7	156-59-2	cis-1,2 dichloroethene	ND	mg / Kg	1	0.005		03/08/01
X0163	XG.2001.273-7	10061-01-5	cis-1,3 dichloropropene	ND	mg / Kg	1	0.005		03/08/01
X0163	XG.2001.273-7	74-95-3	Dibromomethane	ND	mg / Kg	1	0.005		03/08/01
X0163	XG.2001.273-7	97-63-2	Ethyl methacrylate	ND	mg / Kg	1	0.025		03/08/01
X0163	XG.2001.273-7	100-41-4	Ethylbenzene	ND	mg / Kg	1	0.005		03/08/01
X0163	XG.2001.273-7		Freon 113	ND	mg / Kg	1	0.025		03/08/01
X0163	XG.2001.273-7	75-71-8	Freon 12	ND	mg / Kg	1	0.05		03/08/01
X0163	XG.2001.273-7	74-88-4	Iodomethane	ND	mg / Kg	1	0.025		03/08/01
X0163	XG.2001.273-7	1634-04-4	Methyl t-butyl ether (MTBE)	ND	mg / Kg	1	0.005		03/08/01
X0163	XG.2001.273-7	75-09-2	Methylene chloride	ND	mg / Kg	1	0.05		03/08/01
X0163	XG.2001.273-7	91-20-3	Naphthalene	ND	mg / Kg	1	0.025		03/08/01
X0163	XG.2001.273-7	95-47-6	o-Xylene	ND	mg / Kg	1	0.005		03/08/01
X0163	XG.2001.273-7	108-38-3/106-42	p/m Xylenes	ND	mg / Kg	1	0.01		03/08/01
X0163	XG.2001.273-7	100-42-5	Styrene	ND	mg / Kg	1	0.005		03/08/01
X0163	XG.2001.273-7	156-60-5	t-1,2 Dichloroethene	ND	mg / Kg	1	0.005		03/08/01
X0163	XG.2001.273-7	10061-02-6	t-1,3 Dichloropropene	ND	mg / Kg	1	0.005		03/08/01
X0163	XG.2001.273-7	127-18-4	Tetrachloroethene	ND	mg / Kg	1	0.005		03/08/01
X0163	XG.2001.273-7	108-88-3	Toluene	ND	mg / Kg	1	0.005		03/08/01
[illegible]	XG.2001.273-7	79-01-6	Trichloroethene	ND	mg / Kg	1	0.005		03/08/01
[illegible]	XG.2001.273-7	75-69-4	Trichlorofluoromethane	ND	mg / Kg	1	0.025		03/08/01
X0163	XG.2001.273-7	108-05-4	Vinyl acetate	ND	mg / Kg	1	0.025		03/08/01
X0163	XG.2001.273-7	75-01-4	Vinyl chloride	ND	mg / Kg	1	0.025		03/08/01
X0167-001		**SW846 3550A/8270B SVOCs by GC/MS**							
X0167	XG.2001.223-1	120-82-1	1,2,4-Trichlorobenzene	ND	mg / Kg	1	0.03		02/22/01
X0167	XG.2001.223-1	95-50-1	1,2-Dichlorobenzene	ND	mg / Kg	1	0.03		02/22/01
X0167	XG.2001.223-1	541-73-1	1,3-Dichlorobenzene	ND	mg / Kg	1	0.03		02/22/01
X0167	XG.2001.223-1	90-12-0	1-Methylnaphthalene	ND	mg / Kg	1	0.03		02/22/01
X0167	XG.2001.223-1	58-90-2	2,3,4,6-Tetrachlorophenol	ND	mg / Kg	1	1.5		02/22/01
X0167	XG.2001.223-1	95-95-4	2,4,5-Trichlorophenol	ND	mg / Kg	1	0.3		02/22/01
X0167	XG.2001.223-1	88-06-2	2,4,6-Trichlorophenol	ND	mg / Kg	1	0.3		02/22/01
X0167	XG.2001.223-1	120-83-2	2,4-Dichlorophenol	ND	mg / Kg	1	0.3		02/22/01
X0167	XG.2001.223-1	105-67-9	2,4-Dimethylphenol	ND	mg / Kg	1	0.03		02/22/01
X0167	XG.2001.223-1	51-28-5	2,4-Dinitrophenol	ND	mg / Kg	1	0.67		02/22/01
X0167	XG.2001.223-1	121-14-2	2,4-Dinitrotoluene	ND	mg / Kg	1	0.3		02/22/01
X0167	XG.2001.223-1	606-20-2	2,6-Dinitrotoluene	ND	mg / Kg	1	0.3		02/22/01
X0167	XG.2001.223-1	91-58-7	2-Chloronaphthalene	ND	mg / Kg	1	0.03		02/22/01
X0167	XG.2001.223-1	95-57-8	2-Chlorophenol	ND	mg / Kg	1	0.03		02/22/01
X0167	XG.2001.223-1	91-57-6	2-Methylnaphthalene	ND	mg / Kg	1	0.03		02/22/01
X0167	XG.2001.223-1	95-48-7	2-Methylphenol	ND	mg / Kg	1	0.03		02/22/01
X0167	XG.2001.223-1	88-74-4	2-Nitroaniline	ND	mg / Kg	1	0.3		02/22/01
X0167	XG.2001.223-1	88-75-5	2-Nitrophenol	ND	mg / Kg	1	0.3		02/22/01
X0167	XG.2001.223-1		3+4 Methylphenol	ND	mg / Kg	1	0.03		02/22/01
X0167	XG.2001.223-1	91-94-1	3,3-Dichlorobenzidine	ND	mg / Kg	1	0.3		02/22/01
X0167	XG.2001.223-1	99-09-2	3-Nitroaniline	ND	mg / Kg	1	0.3		02/22/01
[illegible]	XG.2001.223-1	534-52-1	4,6-Dinitro-2-methylphenol	ND	mg / Kg	1	0.3		02/22/01

Quality Control Summary

Client: **CH2MHILL**

Project: **0103111** **160660.02.FF.SA**

Explanation of codes

D	*Not applicable due to sample dilutio*
L	*Not applicable due to MDL proximi*

X0167	XG.2001.223-1	101-55-3	4-Bromophenyl-phenylether	ND	mg / Kg	1	0.03	02/22/01
X0167	XG.2001.223-1	59-50-7	4-Chloro-3-methylphenol	ND	mg / Kg	1	0.3	02/22/01
X0167	XG.2001.223-1	106-47-8	4-Chloroaniline	ND	mg / Kg	1	0.3	02/22/01
X0167	XG.2001.223-1	7005-72-3	4-Chlorophenyl-phenylether	ND	mg / Kg	1	0.03	02/22/01
X0167	XG.2001.223-1	100-01-6	4-Nitroaniline	ND	mg / Kg	1	0.3	02/22/01
X0167	XG.2001.223-1	100-02-7	4-Nitrophenol	ND	mg / Kg	1	0.6	02/22/01
X0167	XG.2001.223-1	83-32-9	Acenaphthene	ND	mg / Kg	1	0.03	02/22/01
X0167	XG.2001.223-1	208-96-8	Acenaphthylene	ND	mg / Kg	1	0.03	02/22/01
X0167	XG.2001.223-1	62-53-3	Aniline	ND	mg / Kg	1	0.3	02/22/01
X0167	XG.2001.223-1	120-12-7	Anthracene	ND	mg / Kg	1	0.03	02/22/01
X0167	XG.2001.223-1		Azobenzene&1,2-Diphenylhydrazine	ND	mg / Kg	1	0.03	02/22/01
X0167	XG.2001.223-1	56-55-3	Benzo (a) anthracene	ND	mg / Kg	1	0.03	02/22/01
X0167	XG.2001.223-1	50-32-8	Benzo(a)pyrene	ND	mg / Kg	1	0.03	02/22/01
X0167	XG.2001.223-1		Benzo(b & k)fluoranthene	ND	mg / Kg	1	0.03	02/22/01
X0167	XG.2001.223-1	191-24-2	Benzo(g,h,i)perylene	ND	mg / Kg	1	0.3	02/22/01
X0167	XG.2001.223-1	64-85-0	Benzoic acid	ND	mg / Kg	1	3	02/22/01
X0167	XG.2001.223-1	100-51-6	Benzyl alcohol	ND	mg / Kg	1	1.5	02/22/01
X0167	XG.2001.223-1	111-44-4	bis (2-Chloroethyl) ether	ND	mg / Kg	1	0.03	02/22/01
X0167	XG.2001.223-1	111-91-1	bis(2-Chloroethoxy)methane	ND	mg / Kg	1	0.03	02/22/01
X0167	XG.2001.223-1	108-60-1	bis(2-Chloroisopropyl)ether	ND	mg / Kg	1	0.03	02/22/01
X0167	XG.2001.223-1	117-81-7	bis(2-Ethylhexyl)phthalate	ND	mg / Kg	1	0.3	02/22/01
X0167	XG.2001.223-1	85-68-7	Butylbenzylphthalate	ND	mg / Kg	1	0.03	02/22/01
X0167	XG.2001.223-1	218-01-9	Chrysene	ND	mg / Kg	1	0.03	02/22/01
X0167	XG.2001.223-1	84-74-2	di-n-Butylphthalate	ND	mg / Kg	1	0.3	02/22
X0167	XG.2001.223-1	117-84-0	di-n-Octylpthalate	ND	mg / Kg	1	0.3	02/22/01
X0167	XG.2001.223-1	53-70-3	Dibenz(a,h)anthracene	ND	mg / Kg	1	0.3	02/22/01
X0167	XG.2001.223-1	132-64-9	Dibenzofuran	ND	mg / Kg	1	0.03	02/22/01
X0167	XG.2001.223-1	84-66-2	Diethylphthalate	ND	mg / Kg	1	0.03	02/22/01
X0167	XG.2001.223-1	131-11-3	Dimethylphthalate	ND	mg / Kg	1	0.03	02/22/01
X0167	XG.2001.223-1	206-44-0	Fluoranthene	ND	mg / Kg	1	0.03	02/22/01
X0167	XG.2001.223-1	86737	Fluorene	ND	mg / Kg	1	0.03	02/22/01
X0167	XG.2001.223-1	118-74-1	Hexachlorobenzene	ND	mg / Kg	1	0.03	02/22/01
X0167	XG.2001.223-1	87-68-3	Hexachlorobutadiene	ND	mg / Kg	1	0.03	02/22/01
X0167	XG.2001.223-1	77-47-4	Hexachlorocyclopentadiene	ND	mg / Kg	1	1.5	02/22/01
X0167	XG.2001.223-1	67-72-1	Hexachloroethane	ND	mg / Kg	1	0.03	02/22/01
X0167	XG.2001.223-1	193-39-5	Indeno(1,2,3-cd)pyrene	ND	mg / Kg	1	0.3	02/22/01
X0167	XG.2001.223-1	78-59-1	Isophorone	ND	mg / Kg	1	0.03	02/22/01
X0167	XG.2001.223-1	621-64-7	n-Nitroso-di-n-propylamine	ND	mg / Kg	1	0.03	02/22/01
X0167	XG.2001.223-1	62-75-9	n-Nitroso-dimethyl-amine	ND	mg / Kg	1	0.3	02/22/01
X0167	XG.2001.223-1	86-30-6	n-Nitrosodiphenylamine	ND	mg / Kg	1	0.03	02/22/01
X0167	XG.2001.223-1	91-20-3	Naphthalene	ND	mg / Kg	1	0.03	02/22/01
X0167	XG.2001.223-1	98-95-3	Nitrobenzene	ND	mg / Kg	1	0.03	02/22/01
X0167	XG.2001.223-1	87-86-5	Pentachlorophenol	ND	mg / Kg	1	0.3	02/22/01
X0167	XG.2001.223-1	85-01-8	Phenanthrene	ND	mg / Kg	1	0.03	02/22/01
X0167	XG.2001.223-1	108-95-2	Phenol	ND	mg / Kg	1	0.3	02/22/01
X0167	XG.2001.223-1	129-00-0	Pyrene	ND	mg / Kg	1	0.03	02/22/01
X0167	XG.2001.223-1	110-86-1	Pyridine	ND	mg / Kg	1	0.3	02/22/01
X0167-009		**SW846 3550A/8270B SVOCs by GC/MS**						
X0167	XG.2001.235-1	120-82-1	1,2,4-Trichlorobenzene	ND	mg / Kg	1	0.03	02/23

Quality Control Summary

Explanation of codes

D	*Not applicable due to sample dilution*
L	*Not applicable due to MDL proximity*

Client: **CH2MHILL**

Project: **0103111** **160660.02.FF.SA**

X0167	XG.2001.235-1	95-50-1	1,2-Dichlorobenzene	ND	mg / Kg	1	0.03		02/23/01
X0167	XG.2001.235-1	541-73-1	1,3-Dichlorobenzene	ND	mg / Kg	1	0.03		02/23/01
X0167	XG.2001.235-1	90-12-0	1-Methylnaphthalene	ND	mg / Kg	1	0.03		02/23/01
X0167	XG.2001.235-1	58-90-2	2,3,4,6-Tetrachlorophenol	ND	mg / Kg	1	1.5		02/23/01
X0167	XG.2001.235-1	95-95-4	2,4,5-Trichlorophenol	ND	mg / Kg	1	0.3		02/23/01
X0167	XG.2001.235-1	88-06-2	2,4,6-Trichlorophenol	ND	mg / Kg	1	0.3		02/23/01
X0167	XG.2001.235-1	120-83-2	2,4-Dichlorophenol	ND	mg / Kg	1	0.3		02/23/01
X0167	XG.2001.235-1	105-67-9	2,4-Dimethylphenol	ND	mg / Kg	1	0.03		02/23/01
X0167	XG.2001.235-1	51-28-5	2,4-Dinitrophenol	ND	mg / Kg	1	0.67		02/23/01
X0167	XG.2001.235-1	121-14-2	2,4-Dinitrotoluene	ND	mg / Kg	1	0.3		02/23/01
X0167	XG.2001.235-1	606-20-2	2,6-Dinitrotoluene	ND	mg / Kg	1	0.3		02/23/01
X0167	XG.2001.235-1	91-58-7	2-Chloronaphthalene	ND	mg / Kg	1	0.03		02/23/01
X0167	XG.2001.235-1	95-57-8	2-Chlorophenol	ND	mg / Kg	1	0.03		02/23/01
X0167	XG.2001.235-1	91-57-6	2-Methylnaphthalene	ND	mg / Kg	1	0.03		02/23/01
X0167	XG.2001.235-1	95-48-7	2-Methylphenol	ND	mg / Kg	1	0.03		02/23/01
X0167	XG.2001.235-1	88-74-4	2-Nitroaniline	ND	mg / Kg	1	0.3		02/23/01
X0167	XG.2001.235-1	88-75-5	2-Nitrophenol	ND	mg / Kg	1	0.3		02/23/01
X0167	XG.2001.235-1		3+4 Methylphenol	ND	mg / Kg	1	0.03		02/23/01
X0167	XG.2001.235-1	91-94-1	3,3-Dichlorobenzidine	ND	mg / Kg	1	0.3		02/23/01
X0167	XG.2001.235-1	99-09-2	3-Nitroaniline	ND	mg / Kg	1	0.3		02/23/01
X0167	XG.2001.235-1	534-52-1	4,6-Dinitro-2-methylphenol	ND	mg / Kg	1	0.3		02/23/01
X0167	XG.2001.235-1	101-55-3	4-Bromophenyl-phenylether	ND	mg / Kg	1	0.03		02/23/01
X0167	XG.2001.235-1	59-50-7	4-Chloro-3-methylphenol	ND	mg / Kg	1	0.3		02/23/01
	XG.2001.235-1	106-47-8	4-Chloroaniline	ND	mg / Kg	1	0.3		02/23/01
X0167	XG.2001.235-1	7005-72-3	4-Chlorophenyl-phenylether	ND	mg / Kg	1	0.03		02/23/01
X0167	XG.2001.235-1	100-01-6	4-Nitroaniline	ND	mg / Kg	1	0.3		02/23/01
X0167	XG.2001.235-1	100-02-7	4-Nitrophenol	ND	mg / Kg	1	0.6		02/23/01
X0167	XG.2001.235-1	83-32-9	Acenaphthene	ND	mg / Kg	1	0.03		02/23/01
X0167	XG.2001.235-1	208-96-8	Acenaphthylene	ND	mg / Kg	1	0.03		02/23/01
X0167	XG.2001.235-1	62-53-3	Aniline	ND	mg / Kg	1	0.3		02/23/01
X0167	XG.2001.235-1	120-12-7	Anthracene	ND	mg / Kg	1	0.03		02/23/01
X0167	XG.2001.235-1		Azobenzene&1,2-Diphenylhydrazine	ND	mg / Kg	1	0.03		02/23/01
X0167	XG.2001.235-1	56-55-3	Benzo (a) anthracene	ND	mg / Kg	1	0.03		02/23/01
X0167	XG.2001.235-1	50-32-8	Benzo(a)pyrene	ND	mg / Kg	1	0.03		02/23/01
X0167	XG.2001.235-1		Benzo(b & k)fluoranthene	ND	mg / Kg	1	0.03		02/23/01
X0167	XG.2001.235-1	191-24-2	Benzo(g,h,i)perylene	ND	mg / Kg	1	0.3		02/23/01
X0167	XG.2001.235-1	64-85-0	Benzoic acid	ND	mg / Kg	1	3		02/23/01
X0167	XG.2001.235-1	100-51-6	Benzyl alcohol	ND	mg / Kg	1	1.5		02/23/01
X0167	XG.2001.235-1	111-44-4	bis (2-Chloroethyl) ether	ND	mg / Kg	1	0.03		02/23/01
X0167	XG.2001.235-1	111-91-1	bis(2-Chloroethoxy)methane	ND	mg / Kg	1	0.03		02/23/01
X0167	XG.2001.235-1	108-60-1	bis(2-Chloroisopropyl)ether	ND	mg / Kg	1	0.03		02/23/01
X0167	XG.2001.235-1	117-81-7	bis(2-Ethylhexyl)phthalate	ND	mg / Kg	1	0.3		02/23/01
X0167	XG.2001.235-1	85-68-7	Butylbenzylphthalate	ND	mg / Kg	1	0.03		02/23/01
X0167	XG.2001.235-1	218-01-9	Chrysene	ND	mg / Kg	1	0.03		02/23/01
X0167	XG.2001.235-1	84-74-2	di-n-Butylphthalate	ND	mg / Kg	1	0.3		02/23/01
X0167	XG.2001.235-1	117-84-0	di-n-Octylpthalate	ND	mg / Kg	1	0.3		02/23/01
X0167	XG.2001.235-1	53-70-3	Dibenz(a,h)anthracene	ND	mg / Kg	1	0.3		02/23/01
X0167	XG.2001.235-1	132-64-9	Dibenzofuran	ND	mg / Kg	1	0.03		02/23/01
	XG.2001.235-1	84-66-2	Diethylphthalate	ND	mg / Kg	1	0.03		02/23/01
X0167	XG.2001.235-1	131-11-3	Dimethylphthalate	ND	mg / Kg	1	0.03		02/23/01

Quality Control Summary

Client: **CH2MHILL**

Project: **0103111** **160660.02.FF.SA**

Explanation of codes	
D	*Not applicable due to sample dilutio*
L	*Not applicable due to MDL proximity*

X0167	XG.2001.235-1	206-44-0	Fluoranthene	ND	mg / Kg	1	0.03		02/23/01
X0167	XG.2001.235-1	86737	Fluorene	ND	mg / Kg	1	0.03		02/23/01
X0167	XG.2001.235-1	118-74-1	Hexachlorobenzene	ND	mg / Kg	1	0.03		02/23/01
X0167	XG.2001.235-1	87-68-3	Hexachlorobutadiene	ND	mg / Kg	1	0.03		02/23/01
X0167	XG.2001.235-1	77-47-4	Hexachlorocyclopentadiene	ND	mg / Kg	1	1.5		02/23/01
X0167	XG.2001.235-1	67-72-1	Hexachloroethane	ND	mg / Kg	1	0.03		02/23/01
X0167	XG.2001.235-1	193-39-5	Indeno(1,2,3-cd)pyrene	ND	mg / Kg	1	0.3		02/23/01
X0167	XG.2001.235-1	78-59-1	Isophorone	ND	mg / Kg	1	0.03		02/23/01
X0167	XG.2001.235-1	621-64-7	n-Nitroso-di-n-propylamine	ND	mg / Kg	1	0.03		02/23/01
X0167	XG.2001.235-1	62-75-9	n-Nitroso-dimethyl-amine	ND	mg / Kg	1	0.3		02/23/01
X0167	XG.2001.235-1	86-30-6	n-Nitrosodiphenylamine	ND	mg / Kg	1	0.03		02/23/01
X0167	XG.2001.235-1	91-20-3	Naphthalene	ND	mg / Kg	1	0.03		02/23/01
X0167	XG.2001.235-1	98-95-3	Nitrobenzene	ND	mg / Kg	1	0.03		02/23/01
X0167	XG.2001.235-1	87-86-5	Pentachlorophenol	ND	mg / Kg	1	0.3		02/23/01
X0167	XG.2001.235-1	85-01-8	Phenanthrene	ND	mg / Kg	1	0.03		02/23/01
X0167	XG.2001.235-1	108-95-2	Phenol	ND	mg / Kg	1	0.3		02/23/01
X0167	XG.2001.235-1	129-00-0	Pyrene	ND	mg / Kg	1	0.03		02/23/01
X0167	XG.2001.235-1	110-86-1	Pyridine	ND	mg / Kg	1	0.3		02/23/01

X0167-016 **SW846 3550A/8270B SVOCs by GC/MS**

X0167	XG.2001.269-4	120-82-1	1,2,4-Trichlorobenzene	ND	mg / Kg	1	0.03		03/06/01
X0167	XG.2001.269-4	95-50-1	1,2-Dichlorobenzene	ND	mg / Kg	1	0.03		03/06/01
X0167	XG.2001.269-4	541-73-1	1,3-Dichlorobenzene	ND	mg / Kg	1	0.03		03/06/01
X0167	XG.2001.269-4	90-12-0	1-Methylnaphthalene	ND	mg / Kg	1	0.03		03/06/01
X0167	XG.2001.269-4	58-90-2	2,3,4,6-Tetrachlorophenol	ND	mg / Kg	1	1.5		03/06/
X0167	XG.2001.269-4	95-95-4	2,4,5-Trichlorophenol	ND	mg / Kg	1	0.3		03/06/0
X0167	XG.2001.269-4	88-06-2	2,4,6-Trichlorophenol	ND	mg / Kg	1	0.3		03/06/01
X0167	XG.2001.269-4	120-83-2	2,4-Dichlorophenol	ND	mg / Kg	1	0.3		03/06/01
X0167	XG.2001.269-4	105-67-9	2,4-Dimethylphenol	ND	mg / Kg	1	0.03		03/06/01
X0167	XG.2001.269-4	51-28-5	2,4-Dinitrophenol	ND	mg / Kg	1	0.67		03/06/01
X0167	XG.2001.269-4	121-14-2	2,4-Dinitrotoluene	ND	mg / Kg	1	0.3		03/06/01
X0167	XG.2001.269-4	606-20-2	2,6-Dinitrotoluene	ND	mg / Kg	1	0.3		03/06/01
X0167	XG.2001.269-4	91-58-7	2-Chloronaphthalene	ND	mg / Kg	1	0.03		03/06/01
X0167	XG.2001.269-4	95-57-8	2-Chlorophenol	ND	mg / Kg	1	0.03		03/06/01
X0167	XG.2001.269-4	91-57-6	2-Methylnaphthalene	ND	mg / Kg	1	0.03		03/06/01
X0167	XG.2001.269-4	95-48-7	2-Methylphenol	ND	mg / Kg	1	0.03		03/06/01
X0167	XG.2001.269-4	88-74-4	2-Nitroaniline	ND	mg / Kg	1	0.3		03/06/01
X0167	XG.2001.269-4	88-75-5	2-Nitrophenol	ND	mg / Kg	1	0.3		03/06/01
X0167	XG.2001.269-4		3+4 Methylphenol	ND	mg / Kg	1	0.03		03/06/01
X0167	XG.2001.269-4	91-94-1	3,3-Dichlorobenzidine	ND	mg / Kg	1	0.3		03/06/01
X0167	XG.2001.269-4	99-09-2	3-Nitroaniline	ND	mg / Kg	1	0.3		03/06/01
X0167	XG.2001.269-4	534-52-1	4,6-Dinitro-2-methylphenol	ND	mg / Kg	1	0.3		03/06/01
X0167	XG.2001.269-4	101-55-3	4-Bromophenyl-phenylether	ND	mg / Kg	1	0.03		03/06/01
X0167	XG.2001.269-4	59-50-7	4-Chloro-3-methylphenol	ND	mg / Kg	1	0.3		03/06/01
X0167	XG.2001.269-4	106-47-8	4-Chloroaniline	ND	mg / Kg	1	0.3		03/06/01
X0167	XG.2001.269-4	7005-72-3	4-Chlorophenyl-phenylether	ND	mg / Kg	1	0.03		03/06/01
X0167	XG.2001.269-4	100-01-6	4-Nitroaniline	ND	mg / Kg	1	0.3		03/06/01
X0167	XG.2001.269-4	100-02-7	4-Nitrophenol	ND	mg / Kg	1	0.6		03/06/01
X0167	XG.2001.269-4	83-32-9	Acenaphthene	ND	mg / Kg	1	0.03		03/06/01
X0167	XG.2001.269-4	208-96-8	Acenaphthylene	ND	mg / Kg	1	0.03		03/06/01
X0167	XG.2001.269-4	62-53-3	Aniline	ND	mg / Kg	1	0.3		03/06/

Quality Control Summary

Explanation of codes

D	*Not applicable due to sample dilution*
L	*Not applicable due to MDL proximity*

Client: CH2MHILL

Project: 0103111 160660.02.FF.SA

X0167	XG.2001.269-4	120-12-7	Anthracene	ND	mg / Kg	1	0.03		03/06/01
X0167	XG.2001.269-4		Azobenzene&1,2-Diphenylhydrazine	ND	mg / Kg	1	0.03		03/06/01
X0167	XG.2001.269-4	56-55-3	Benzo (a) anthracene	ND	mg / Kg	1	0.03		03/06/01
X0167	XG.2001.269-4	50-32-8	Benzo(a)pyrene	ND	mg / Kg	1	0.03		03/06/01
X0167	XG.2001.269-4		Benzo(b & k)fluoranthene	ND	mg / Kg	1	0.03		03/06/01
X0167	XG.2001.269-4	191-24-2	Benzo(g,h,i)perylene	ND	mg / Kg	1	0.3		03/06/01
X0167	XG.2001.269-4	64-85-0	Benzoic acid	ND	mg / Kg	1	3		03/06/01
X0167	XG.2001.269-4	100-51-6	Benzyl alcohol	ND	mg / Kg	1	1.5		03/06/01
X0167	XG.2001.269-4	111-44-4	bis (2-Chloroethyl) ether	ND	mg / Kg	1	0.03		03/06/01
X0167	XG.2001.269-4	111-91-1	bis(2-Chloroethoxy)methane	ND	mg / Kg	1	0.03		03/06/01
X0167	XG.2001.269-4	108-60-1	bis(2-Chloroisopropyl)ether	ND	mg / Kg	1	0.03		03/06/01
X0167	XG.2001.269-4	117-81-7	bis(2-Ethylhexyl)phthalate	ND	mg / Kg	1	0.3		03/06/01
X0167	XG.2001.269-4	85-68-7	Butylbenzylphthalate	ND	mg / Kg	1	0.03		03/06/01
X0167	XG.2001.269-4	218-01-9	Chrysene	ND	mg / Kg	1	0.03		03/06/01
X0167	XG.2001.269-4	84-74-2	di-n-Butylphthalate	ND	mg / Kg	1	0.3		03/06/01
X0167	XG.2001.269-4	117-84-0	di-n-Octylpthalate	ND	mg / Kg	1	0.3		03/06/01
X0167	XG.2001.269-4	53-70-3	Dibenz(a,h)anthracene	ND	mg / Kg	1	0.3		03/06/01
X0167	XG.2001.269-4	132-64-9	Dibenzofuran	ND	mg / Kg	1	0.03		03/06/01
X0167	XG.2001.269-4	84-66-2	Diethylphthalate	ND	mg / Kg	1	0.03		03/06/01
X0167	XG.2001.269-4	131-11-3	Dimethylphthalate	ND	mg / Kg	1	0.03		03/06/01
X0167	XG.2001.269-4	206-44-0	Fluoranthene	ND	mg / Kg	1	0.03		03/06/01
X0167	XG.2001.269-4	86737	Fluorene	ND	mg / Kg	1	0.03		03/06/01
[illegible]	XG.2001.269-4	118-74-1	Hexachlorobenzene	ND	mg / Kg	1	0.03		03/06/01
[illegible]	XG.2001.269-4	87-68-3	Hexachlorobutadiene	ND	mg / Kg	1	0.03		03/06/01
X0167	XG.2001.269-4	77-47-4	Hexachlorocyclopentadiene	ND	mg / Kg	1	1.5		03/06/01
X0167	XG.2001.269-4	67-72-1	Hexachloroethane	ND	mg / Kg	1	0.03		03/06/01
X0167	XG.2001.269-4	193-39-5	Indeno(1,2,3-cd)pyrene	ND	mg / Kg	1	0.3		03/06/01
X0167	XG.2001.269-4	78-59-1	Isophorone	ND	mg / Kg	1	0.03		03/06/01
X0167	XG.2001.269-4	621-64-7	n-Nitroso-di-n-propylamine	ND	mg / Kg	1	0.03		03/06/01
X0167	XG.2001.269-4	62-75-9	n-Nitroso-dimethyl-amine	ND	mg / Kg	1	0.3		03/06/01
X0167	XG.2001.269-4	86-30-6	n-Nitrosodiphenylamine	ND	mg / Kg	1	0.03		03/06/01
X0167	XG.2001.269-4	91-20-3	Naphthalene	ND	mg / Kg	1	0.03		03/06/01
X0167	XG.2001.269-4	98-95-3	Nitrobenzene	ND	mg / Kg	1	0.03		03/06/01
X0167	XG.2001.269-4	87-86-5	Pentachlorophenol	ND	mg / Kg	1	0.3		03/06/01
X0167	XG.2001.269-4	85-01-8	Phenanthrene	ND	mg / Kg	1	0.03		03/06/01
X0167	XG.2001.269-4	108-95-2	Phenol	ND	mg / Kg	1	0.3		03/06/01
X0167	XG.2001.269-4	129-00-0	Pyrene	ND	mg / Kg	1	0.03		03/06/01
X0167	XG.2001.269-4	110-86-1	Pyridine	ND	mg / Kg	1	0.3		03/06/01
X0167-021		**8270**							
X0167	XG.2001.326-1		1,4-DICHLOROBENZENE	ND	mg / Kg	1	0.03		03/19/01
X0167-021		**SW846 3550A/8270B SVOCs by GC/MS**							
X0167	XG.2001.326-1	120-82-1	1,2,4-Trichlorobenzene	ND	mg / Kg	1	0.03		03/19/01
X0167	XG.2001.326-1	95-50-1	1,2-Dichlorobenzene	ND	mg / Kg	1	0.03		03/19/01
X0167	XG.2001.326-1	541-73-1	1,3-Dichlorobenzene	ND	mg / Kg	1	0.03		03/19/01
X0167	XG.2001.326-1	90-12-0	1-Methylnaphthalene	ND	mg / Kg	1	0.03		03/19/01
X0167	XG.2001.326-1	58-90-2	2,3,4,6-Tetrachlorophenol	ND	mg / Kg	1	1.5		03/19/01
X0167	XG.2001.326-1	95-95-4	2,4,5-Trichlorophenol	ND	mg / Kg	1	0.3		03/19/01
[illegible]	XG.2001.326-1	88-06-2	2,4,6-Trichlorophenol	ND	mg / Kg	1	0.3		03/19/01
[illegible]	XG.2001.326-1	120-83-2	2,4-Dichlorophenol	ND	mg / Kg	1	0.3		03/19/01

Quality Control Summary

Client: **CH2MHILL**

Project: **0103111** **160660.02.FF.SA**

Explanation of codes

D	*Not applicable due to sample diluti*
L	*Not applicable due to MDL proxim*

X0167	XG.2001.326-1	105-67-9	2,4-Dimethylphenol	ND	mg / Kg	1	0.03		03/19/01
X0167	XG.2001.326-1	51-28-5	2,4-Dinitrophenol	ND	mg / Kg	1	0.67		03/19/01
X0167	XG.2001.326-1	121-14-2	2,4-Dinitrotoluene	ND	mg / Kg	1	0.3		03/19/01
X0167	XG.2001.326-1	606-20-2	2,6-Dinitrotoluene	ND	mg / Kg	1	0.3		03/19/01
X0167	XG.2001.326-1	91-58-7	2-Chloronaphthalene	ND	mg / Kg	1	0.03		03/19/01
X0167	XG.2001.326-1	95-57-8	2-Chlorophenol	ND	mg / Kg	1	0.03		03/19/01
X0167	XG.2001.326-1	91-57-6	2-Methylnaphthalene	ND	mg / Kg	1	0.03		03/19/01
X0167	XG.2001.326-1	95-48-7	2-Methylphenol	ND	mg / Kg	1	0.03		03/19/01
X0167	XG.2001.326-1	88-74-4	2-Nitroaniline	ND	mg / Kg	1	0.3		03/19/01
X0167	XG.2001.326-1	88-75-5	2-Nitrophenol	ND	mg / Kg	1	0.3		03/19/01
X0167	XG.2001.326-1		3+4 Methylphenol	ND	mg / Kg	1	0.03		03/19/01
X0167	XG.2001.326-1	91-94-1	3,3-Dichlorobenzidine	ND	mg / Kg	1	0.3		03/19/01
X0167	XG.2001.326-1	99-09-2	3-Nitroaniline	ND	mg / Kg	1	0.3		03/19/01
X0167	XG.2001.326-1	534-52-1	4,6-Dinitro-2-methylphenol	ND	mg / Kg	1	0.3		03/19/01
X0167	XG.2001.326-1	101-55-3	4-Bromophenyl-phenylether	ND	mg / Kg	1	0.03		03/19/01
X0167	XG.2001.326-1	59-50-7	4-Chloro-3-methylphenol	ND	mg / Kg	1	0.3		03/19/01
X0167	XG.2001.326-1	106-47-8	4-Chloroaniline	ND	mg / Kg	1	0.3		03/19/01
X0167	XG.2001.326-1	7005-72-3	4-Chlorophenyl-phenylether	ND	mg / Kg	1	0.03		03/19/01
X0167	XG.2001.326-1	100-01-6	4-Nitroaniline	ND	mg / Kg	1	0.3		03/19/01
X0167	XG.2001.326-1	100-02-7	4-Nitrophenol	ND	mg / Kg	1	0.6		03/19/01
X0167	XG.2001.326-1	83-32-9	Acenaphthene	ND	mg / Kg	1	0.03		03/19/01
X0167	XG.2001.326-1	208-96-8	Acenaphthylene	ND	mg / Kg	1	0.03		03/19/01
X0167	XG.2001.326-1	62-53-3	Aniline	ND	mg / Kg	1	0.3		03/19/01
X0167	XG.2001.326-1	120-12-7	Anthracene	ND	mg / Kg	1	0.03		03/19/0
X0167	XG.2001.326-1		Azobenzene&1,2-Diphenylhydrazine	ND	mg / Kg	1	0.03		03/19/
X0167	XG.2001.326-1	56-55-3	Benzo (a) anthracene	ND	mg / Kg	1	0.03		03/19/01
X0167	XG.2001.326-1	50-32-8	Benzo(a)pyrene	ND	mg / Kg	1	0.03		03/19/01
X0167	XG.2001.326-1		Benzo(b & k)fluoranthene	ND	mg / Kg	1	0.03		03/19/01
X0167	XG.2001.326-1	191-24-2	Benzo(g,h,i)perylene	ND	mg / Kg	1	0.3		03/19/01
X0167	XG.2001.326-1	64-85-0	Benzoic acid	ND	mg / Kg	1	3		03/19/01
X0167	XG.2001.326-1	100-51-6	Benzyl alcohol	ND	mg / Kg	1	1.5		03/19/01
X0167	XG.2001.326-1	111-44-4	bis (2-Chloroethyl) ether	ND	mg / Kg	1	0.03		03/19/01
X0167	XG.2001.326-1	111-91-1	bis(2-Chloroethoxy)methane	ND	mg / Kg	1	0.03		03/19/01
X0167	XG.2001.326-1	108-60-1	bis(2-Chloroisopropyl)ether	ND	mg / Kg	1	0.03		03/19/01
X0167	XG.2001.326-1	117-81-7	bis(2-Ethylhexyl)phthalate	ND	mg / Kg	1	0.3		03/19/01
X0167	XG.2001.326-1	85-68-7	Butylbenzylphthalate	ND	mg / Kg	1	0.03		03/19/01
X0167	XG.2001.326-1	218-01-9	Chrysene	ND	mg / Kg	1	0.03		03/19/01
X0167	XG.2001.326-1	84-74-2	di-n-Butylphthalate	ND	mg / Kg	1	0.3		03/19/01
X0167	XG.2001.326-1	117-84-0	di-n-Octylpthalate	ND	mg / Kg	1	0.3		03/19/01
X0167	XG.2001.326-1	53-70-3	Dibenz(a,h)anthracene	ND	mg / Kg	1	0.3		03/19/01
X0167	XG.2001.326-1	132-64-9	Dibenzofuran	ND	mg / Kg	1	0.03		03/19/01
X0167	XG.2001.326-1	84-66-2	Diethylphthalate	ND	mg / Kg	1	0.03		03/19/01
X0167	XG.2001.326-1	131-11-3	Dimethylphthalate	ND	mg / Kg	1	0.03		03/19/01
X0167	XG.2001.326-1	206-44-0	Fluoranthene	ND	mg / Kg	1	0.03		03/19/01
X0167	XG.2001.326-1	86737	Fluorene	ND	mg / Kg	1	0.03		03/19/01
X0167	XG.2001.326-1	118-74-1	Hexachlorobenzene	ND	mg / Kg	1	0.03		03/19/01
X0167	XG.2001.326-1	87-68-3	Hexachlorobutadiene	ND	mg / Kg	1	0.03		03/19/01
X0167	XG.2001.326-1	77-47-4	Hexachlorocyclopentadiene	ND	mg / Kg	1	1.5		03/19/01
X0167	XG.2001.326-1	67-72-1	Hexachloroethane	ND	mg / Kg	1	0.03		03/19/0
X0167	XG.2001.326-1	193-39-5	Indeno(1,2,3-cd)pyrene	ND	mg / Kg	1	0.3		03/19/

Quality Control Summary

Explanation of codes

D	*Not applicable due to sample dilution*
L	*Not applicable due to MDL proximity*

Client: **CH2MHILL**

Project: **0103111** **160660.02.FF.SA**

X0167	XG.2001.326-1	78-59-1	Isophorone	ND	mg / Kg	1	0.03		03/19/01
X0167	XG.2001.326-1	621-64-7	n-Nitroso-di-n-propylamine	ND	mg / Kg	1	0.03		03/19/01
X0167	XG.2001.326-1	62-75-9	n-Nitroso-dimethyl-amine	ND	mg / Kg	1	0.3		03/19/01
X0167	XG.2001.326-1	86-30-6	n-Nitrosodiphenylamine	ND	mg / Kg	1	0.03		03/19/01
X0167	XG.2001.326-1	91-20-3	Naphthalene	ND	mg / Kg	1	0.03		03/19/01
X0167	XG.2001.326-1	98-95-3	Nitrobenzene	ND	mg / Kg	1	0.03		03/19/01
X0167	XG.2001.326-1	87-86-5	Pentachlorophenol	ND	mg / Kg	1	0.3		03/19/01
X0167	XG.2001.326-1	85-01-8	Phenanthrene	ND	mg / Kg	1	0.03		03/19/01
X0167	XG.2001.326-1	108-95-2	Phenol	ND	mg / Kg	1	0.3		03/19/01
X0167	XG.2001.326-1	129-00-0	Pyrene	ND	mg / Kg	1	0.03		03/19/01
X0167	XG.2001.326-1	110-86-1	Pyridine	ND	mg / Kg	1	0.3		03/19/01
X0182-001		**SW846 5030A/8015A GRO by GC/FID**							
X0182	XG.2001.271-1		Gasoline Range Organics	ND	mg / Kg	1	0.25		03/07/01
X0182-012		**SW846 5030A/8015A GRO by GC/FID**							
X0182	XG.2001.294-1		Gasoline Range Organics	ND	mg / Kg	1	0.25		03/08/01
X0182-023		**SW846 5030A/8015A GRO by GC/FID**							
X0182	XG.2001.294-10		Gasoline Range Organics	ND	mg / Kg	1	0.25		03/12/01
X0182-026		**SW846 5030A/8015A GRO by GC/FID**							
X0182	XG.2001.297-1		Gasoline Range Organics	ND	mg / Kg	1	0.25		03/13/01
X0182-029		**SW846 5030A/8015A GRO by GC/FID**							
X0182	XG.2001.297-4		Gasoline Range Organics	ND	mg / Kg	1	0.25		03/14/01
X0183-001		**SW846 ME/8015A Diesel Range Organics by GC/FID**							
X0183	XG.2001.276-1		Diesel Range Organics	ND	mg / Kg	1	25		03/08/01
X0183-023		**SW846 ME/8015A Diesel Range Organics by GC/FID**							
X0183	XG.2001.298-1		Diesel Range Organics	ND	mg / Kg	1	25		03/14/01
X0190-001		**SW846 8260A Purgeable VOCs by GC/MS**							
X0190	XG.2001.300-1	75-34-3	1,1 Dichloroethane	ND	mg / Kg	1	0.005		03/13/01
X0190	XG.2001.300-1	75-34-3	1,1 Dichloroethene	ND	mg / Kg	1	0.005		03/13/01
X0190	XG.2001.300-1	71-55-6	1,1,1 Trichloroethane	ND	mg / Kg	1	0.005		03/13/01
X0190	XG.2001.300-1	630-20-6	1,1,1,2 Tetrachloroethane	ND	mg / Kg	1	0.005		03/13/01
X0190	XG.2001.300-1	79-00-5	1,1,2 Trichloroethane	ND	mg / Kg	1	0.005		03/13/01
X0190	XG.2001.300-1	79-34-5	1,1,2,2 Tetrachloroethane	ND	mg / Kg	1	0.005		03/13/01
X0190	XG.2001.300-1	106-93-4	1,2 Dibromoethane (EDB)	ND	mg / Kg	1	0.005		03/13/01
X0190	XG.2001.300-1	95-50-1	1,2 Dichlorobenzene	ND	mg / Kg	1	0.005		03/13/01
X0190	XG.2001.300-1	107-06-2	1,2 Dichloroethane	ND	mg / Kg	1	0.005		03/13/01
X0190	XG.2001.300-1	78-87-5	1,2 Dichloropropane	ND	mg / Kg	1	0.005		03/13/01
X0190	XG.2001.300-1	96-18-4	1,2,3 Trichloropropane	ND	mg / Kg	1	0.005		03/13/01
X0190	XG.2001.300-1	95-63-6	1,2,4-Trimethylbenzene	ND	mg / Kg	1	0.005		03/13/01
X0190	XG.2001.300-1	541-73-1	1,3 Dichlorobenzene	ND	mg / Kg	1	0.005		03/13/01
X0190	XG.2001.300-1	108-67-8	1,3,5-Trimethylbenzene	ND	mg / Kg	1	0.005		03/13/01
X0190	XG.2001.300-1	764-41-0	1,4 Dichloro-2-butene	ND	mg / Kg	1	0.05		03/13/01
X0190	XG.2001.300-1	106-46-7	1,4 Dichlorobenzene	ND	mg / Kg	1	0.005		03/13/01
X0190	XG.2001.300-1	78-93-3	2-Butanone (MEK)	ND	mg / Kg	1	0.025		03/13/01
X0190	XG.2001.300-1	110-75-8	2-Chloroethylvinylether	ND	mg / Kg	1	0.025		03/13/01
X0190	XG.2001.300-1	591-78-6	2-Hexanone (MBK)	ND	mg / Kg	1	0.025		03/13/01
[illegible]	XG.2001.300-1	108-10-1	4-Methyl-2-pentanone (MIBK)	ND	mg / Kg	1	0.025		03/13/01
X0190	XG.2001.300-1	67-64-1	Acetone	ND	mg / Kg	1	0.05		03/13/01

RECEIVED MAR 2 0 2001

Quality Control Summary

Client: CH2MHILL

Project: 0103111 160660.02.FF.SA

Explanation of codes	
D	Not applicable due to sample dilut
L	Not applicable due to MDL proxim

X0190	XG.2001.300-1	107-02-8	Acrolein	ND	mg / Kg	1	0.1		03/13/01
X0190	XG.2001.300-1	107-13-1	Acrylonitrile	ND	mg / Kg	1	0.1		03/13/01
X0190	XG.2001.300-1	71-43-2	Benzene	ND	mg / Kg	1	0.005		03/13/01
X0190	XG.2001.300-1	75-27-4	Bromodichloromethane	ND	mg / Kg	1	0.005		03/13/01
X0190	XG.2001.300-1	75-25-2	Bromoform	ND	mg / Kg	1	0.005		03/13/01
X0190	XG.2001.300-1	74-83-9	Bromomethane	ND	mg / Kg	1	0.025		03/13/01
X0190	XG.2001.300-1	75-15-0	Carbon disulfide	ND	mg / Kg	1	0.025		03/13/01
X0190	XG.2001.300-1	56-23-5	Carbon tetrachloride	ND	mg / Kg	1	0.005		03/13/01
X0190	XG.2001.300-1	108-90-7	Chlorobenzene	ND	mg / Kg	1	0.005		03/13/01
X0190	XG.2001.300-1	124-48-1	Chlorodibromomethane	ND	mg / Kg	1	0.005		03/13/01
X0190	XG.2001.300-1	75-00-3	Chloroethane	ND	mg / Kg	1	0.025		03/13/01
X0190	XG.2001.300-1	67-66-3	Chloroform	ND	mg / Kg	1	0.005		03/13/01
X0190	XG.2001.300-1	74-87-3	Chloromethane	ND	mg / Kg	1	0.025		03/13/01
X0190	XG.2001.300-1	156-59-2	cis-1,2 dichloroethene	ND	mg / Kg	1	0.005		03/13/01
X0190	XG.2001.300-1	10061-01-5	cis-1,3 dichloropropene	ND	mg / Kg	1	0.005		03/13/01
X0190	XG.2001.300-1	74-95-3	Dibromomethane	ND	mg / Kg	1	0.005		03/13/01
X0190	XG.2001.300-1	97-63-2	Ethyl methacrylate	ND	mg / Kg	1	0.025		03/13/01
X0190	XG.2001.300-1	100-41-4	Ethylbenzene	ND	mg / Kg	1	0.005		03/13/01
X0190	XG.2001.300-1		Freon 113	ND	mg / Kg	1	0.025		03/13/01
X0190	XG.2001.300-1	75-71-8	Freon 12	ND	mg / Kg	1	0.05		03/13/01
X0190	XG.2001.300-1	74-88-4	Iodomethane	ND	mg / Kg	1	0.025		03/13/01
X0190	XG.2001.300-1	1634-04-4	Methyl t-butyl ether (MTBE)	ND	mg / Kg	1	0.005		03/13/01
X0190	XG.2001.300-1	75-09-2	Methylene chloride	ND	mg / Kg	1	0.05		03/13/01
X0190	XG.2001.300-1	91-20-3	Naphthalene	ND	mg / Kg	1	0.025		03/13
X0190	XG.2001.300-1	95-47-6	o-Xylene	ND	mg / Kg	1	0.005		03/13
X0190	XG.2001.300-1	108-38-3/106-42	p/m Xylenes	ND	mg / Kg	1	0.01		03/13/01
X0190	XG.2001.300-1	100-42-5	Styrene	ND	mg / Kg	1	0.005		03/13/01
X0190	XG.2001.300-1	156-60-5	t-1,2 Dichloroethene	ND	mg / Kg	1	0.005		03/13/01
X0190	XG.2001.300-1	10061-02-6	t-1,3 Dichloropropene	ND	mg / Kg	1	0.005		03/13/01
X0190	XG.2001.300-1	127-18-4	Tetrachloroethene	ND	mg / Kg	1	0.005		03/13/01
X0190	XG.2001.300-1	108-88-3	Toluene	ND	mg / Kg	1	0.005		03/13/01
X0190	XG.2001.300-1	79-01-6	Trichloroethene	ND	mg / Kg	1	0.005		03/13/01
X0190	XG.2001.300-1	75-69-4	Trichlorofluoromethane	ND	mg / Kg	1	0.025		03/13/01
X0190	XG.2001.300-1	108-05-4	Vinyl acetate	ND	mg / Kg	1	0.025		03/13/01
X0190	XG.2001.300-1	75-01-4	Vinyl chloride	ND	mg / Kg	1	0.025		03/13/01
X0190-014		**SW846 8260A Purgeable VOCs by GC/MS**							
X0190	XG.2001.300-11	75-34-3	1,1 Dichloroethane	ND	mg / Kg	1	0.005		03/14/01
X0190	XG.2001.300-11	75-34-3	1,1 Dichloroethene	ND	mg / Kg	1	0.005		03/14/01
X0190	XG.2001.300-11	71-55-6	1,1,1 Trichloroethane	ND	mg / Kg	1	0.005		03/14/01
X0190	XG.2001.300-11	630-20-6	1,1,1,2 Tetrachloroethane	ND	mg / Kg	1	0.005		03/14/01
X0190	XG.2001.300-11	79-00-5	1,1,2 Trichloroethane	ND	mg / Kg	1	0.005		03/14/01
X0190	XG.2001.300-11	79-34-5	1,1,2,2 Tetrachloroethane	ND	mg / Kg	1	0.005		03/14/01
X0190	XG.2001.300-11	106-93-4	1,2 Dibromoethane (EDB)	ND	mg / Kg	1	0.005		03/14/01
X0190	XG.2001.300-11	95-50-1	1,2 Dichlorobenzene	ND	mg / Kg	1	0.005		03/14/01
X0190	XG.2001.300-11	107-06-2	1,2 Dichloroethane	ND	mg / Kg	1	0.005		03/14/01
X0190	XG.2001.300-11	78-87-5	1,2 Dichloropropane	ND	mg / Kg	1	0.005		03/14/01
X0190	XG.2001.300-11	96-18-4	1,2,3 Trichloropropane	ND	mg / Kg	1	0.005		03/14/01
X0190	XG.2001.300-11	95-63-6	1,2,4-Trimethylbenzene	ND	mg / Kg	1	0.005		03/14/01
X0190	XG.2001.300-11	541-73-1	1,3 Dichlorobenzene	ND	mg / Kg	1	0.005		03/1

Quality Control Summary

Explanation of codes

D	*Not applicable due to sample dilution*
L	*Not applicable due to MDL proximity*

nt: CH2MHILL

Project: 0103111 160660.02.FF.SA

X0190	XG.2001.300-11	108-67-8	1,3,5-Trimethylbenzene	ND	mg / Kg	1	0.005		03/14/01
X0190	XG.2001.300-11	764-41-0	1,4 Dichloro-2-butene	ND	mg / Kg	1	0.05		03/14/01
X0190	XG.2001.300-11	106-46-7	1,4 Dichlorobenzene	ND	mg / Kg	1	0.005		03/14/01
X0190	XG.2001.300-11	78-93-3	2-Butanone (MEK)	ND	mg / Kg	1	0.025		03/14/01
X0190	XG.2001.300-11	110-75-8	2-Chloroethylvinylether	ND	mg / Kg	1	0.025		03/14/01
X0190	XG.2001.300-11	591-78-6	2-Hexanone (MBK)	ND	mg / Kg	1	0.025		03/14/01
X0190	XG.2001.300-11	108-10-1	4-Methyl-2-pentanone (MIBK)	ND	mg / Kg	1	0.025		03/14/01
X0190	XG.2001.300-11	67-64-1	Acetone	ND	mg / Kg	1	0.05		03/14/01
X0190	XG.2001.300-11	107-02-8	Acrolein	ND	mg / Kg	1	0.1		03/14/01
X0190	XG.2001.300-11	107-13-1	Acrylonitrile	ND	mg / Kg	1	0.1		03/14/01
X0190	XG.2001.300-11	71-43-2	Benzene	ND	mg / Kg	1	0.005		03/14/01
X0190	XG.2001.300-11	75-27-4	Bromodichloromethane	ND	mg / Kg	1	0.005		03/14/01
X0190	XG.2001.300-11	75-25-2	Bromoform	ND	mg / Kg	1	0.005		03/14/01
X0190	XG.2001.300-11	74-83-9	Bromomethane	ND	mg / Kg	1	0.025		03/14/01
X0190	XG.2001.300-11	75-15-0	Carbon disulfide	ND	mg / Kg	1	0.025		03/14/01
X0190	XG.2001.300-11	56-23-5	Carbon tetrachloride	ND	mg / Kg	1	0.005		03/14/01
X0190	XG.2001.300-11	108-90-7	Chlorobenzene	ND	mg / Kg	1	0.005		03/14/01
X0190	XG.2001.300-11	124-48-1	Chlorodibromomethane	ND	mg / Kg	1	0.005		03/14/01
X0190	XG.2001.300-11	75-00-3	Chloroethane	ND	mg / Kg	1	0.025		03/14/01
X0190	XG.2001.300-11	67-66-3	Chloroform	ND	mg / Kg	1	0.005		03/14/01
X0190	XG.2001.300-11	74-87-3	Chloromethane	ND	mg / Kg	1	0.025		03/14/01
X0190	XG.2001.300-11	156-59-2	cis-1,2 dichloroethene	ND	mg / Kg	1	0.005		03/14/01
X0190	XG.2001.300-11	10061-01-5	cis-1,3 dichloropropene	ND	mg / Kg	1	0.005		03/14/01
[illegible]	XG.2001.300-11	74-95-3	Dibromomethane	ND	mg / Kg	1	0.005		03/14/01
X0190	XG.2001.300-11	97-63-2	Ethyl methacrylate	ND	mg / Kg	1	0.025		03/14/01
X0190	XG.2001.300-11	100-41-4	Ethylbenzene	ND	mg / Kg	1	0.005		03/14/01
X0190	XG.2001.300-11		Freon 113	ND	mg / Kg	1	0.025		03/14/01
X0190	XG.2001.300-11	75-71-8	Freon 12	ND	mg / Kg	1	0.05		03/14/01
X0190	XG.2001.300-11	74-88-4	Iodomethane	ND	mg / Kg	1	0.025		03/14/01
X0190	XG.2001.300-11	1634-04-4	Methyl t-butyl ether (MTBE)	ND	mg / Kg	1	0.005		03/14/01
X0190	XG.2001.300-11	75-09-2	Methylene chloride	ND	mg / Kg	1	0.05		03/14/01
X0190	XG.2001.300-11	91-20-3	Naphthalene	ND	mg / Kg	1	0.025		03/14/01
X0190	XG.2001.300-11	95-47-6	o-Xylene	ND	mg / Kg	1	0.005		03/14/01
X0190	XG.2001.300-11	108-38-3/106-42	p/m Xylenes	ND	mg / Kg	1	0.01		03/14/01
X0190	XG.2001.300-11	100-42-5	Styrene	ND	mg / Kg	1	0.005		03/14/01
X0190	XG.2001.300-11	156-60-5	t-1,2 Dichloroethene	ND	mg / Kg	1	0.005		03/14/01
X0190	XG.2001.300-11	10061-02-6	t-1,3 Dichloropropene	ND	mg / Kg	1	0.005		03/14/01
X0190	XG.2001.300-11	127-18-4	Tetrachloroethene	ND	mg / Kg	1	0.005		03/14/01
X0190	XG.2001.300-11	108-88-3	Toluene	ND	mg / Kg	1	0.005		03/14/01
X0190	XG.2001.300-11	79-01-6	Trichloroethene	ND	mg / Kg	1	0.005		03/14/01
X0190	XG.2001.300-11	75-69-4	Trichlorofluoromethane	ND	mg / Kg	1	0.025		03/14/01
X0190	XG.2001.300-11	108-05-4	Vinyl acetate	ND	mg / Kg	1	0.025		03/14/01
X0190	XG.2001.300-11	75-01-4	Vinyl chloride	ND	mg / Kg	1	0.025		03/14/01

X0190-021 SW846 8260A Purgeable VOCs by GC/MS

X0190	XG.2001.330-1	75-34-3	1,1 Dichloroethane	ND	mg / Kg	1	0.005		03/20/01
X0190	XG.2001.330-1	75-34-3	1,1 Dichloroethene	ND	mg / Kg	1	0.005		03/20/01
X0190	XG.2001.330-1	71-55-6	1,1,1 Trichloroethane	ND	mg / Kg	1	0.005		03/20/01
X0190	XG.2001.330-1	630-20-6	1,1,1,2 Tetrachloroethane	ND	mg / Kg	1	0.005		03/20/01
X0190	XG.2001.330-1	79-00-5	1,1,2 Trichloroethane	ND	mg / Kg	1	0.005		03/20/01

Quality Control Summary

Client: **CH2MHILL**

Project: **0103111** **160660.02.FF.SA**

Explanation of codes

D	*Not applicable due to sample dilu*
L	*Not applicable due to MDL proxim*

X0190	XG.2001.330-1	79-34-5	1,1,2,2 Tetrachloroethane	ND	mg / Kg	1	0.005		03/20/01
X0190	XG.2001.330-1	106-93-4	1,2 Dibromoethane (EDB)	ND	mg / Kg	1	0.005		03/20/01
X0190	XG.2001.330-1	95-50-1	1,2 Dichlorobenzene	ND	mg / Kg	1	0.005		03/20/01
X0190	XG.2001.330-1	107-06-2	1,2 Dichloroethane	ND	mg / Kg	1	0.005		03/20/01
X0190	XG.2001.330-1	78-87-5	1,2 Dichloropropane	ND	mg / Kg	1	0.005		03/20/01
X0190	XG.2001.330-1	96-18-4	1,2,3 Trichloropropane	ND	mg / Kg	1	0.005		03/20/01
X0190	XG.2001.330-1	95-63-6	1,2,4-Trimethylbenzene	ND	mg / Kg	1	0.005		03/20/01
X0190	XG.2001.330-1	541-73-1	1,3 Dichlorobenzene	ND	mg / Kg	1	0.005		03/20/01
X0190	XG.2001.330-1	108-67-8	1,3,5-Trimethylbenzene	ND	mg / Kg	1	0.005		03/20/01
X0190	XG.2001.330-1	764-41-0	1,4 Dichloro-2-butene	ND	mg / Kg	1	0.05		03/20/01
X0190	XG.2001.330-1	106-46-7	1,4 Dichlorobenzene	ND	mg / Kg	1	0.005		03/20/01
X0190	XG.2001.330-1	78-93-3	2-Butanone (MEK)	ND	mg / Kg	1	0.025		03/20/01
X0190	XG.2001.330-1	110-75-8	2-Chloroethylvinylether	ND	mg / Kg	1	0.025		03/20/01
X0190	XG.2001.330-1	591-78-6	2-Hexanone (MBK)	ND	mg / Kg	1	0.025		03/20/01
X0190	XG.2001.330-1	108-10-1	4-Methyl-2-pentanone (MIBK)	ND	mg / Kg	1	0.025		03/20/01
X0190	XG.2001.330-1	67-64-1	Acetone	ND	mg / Kg	1	0.05		03/20/01
X0190	XG.2001.330-1	107-02-8	Acrolein	ND	mg / Kg	1	0.1		03/20/01
X0190	XG.2001.330-1	107-13-1	Acrylonitrile	ND	mg / Kg	1	0.1		03/20/01
X0190	XG.2001.330-1	71-43-2	Benzene	ND	mg / Kg	1	0.005		03/20/01
X0190	XG.2001.330-1	75-27-4	Bromodichloromethane	ND	mg / Kg	1	0.005		03/20/01
X0190	XG.2001.330-1	75-25-2	Bromoform	ND	mg / Kg	1	0.005		03/20/01
X0190	XG.2001.330-1	74-83-9	Bromomethane	ND	mg / Kg	1	0.025		03/20/01
X0190	XG.2001.330-1	75-15-0	Carbon disulfide	ND	mg / Kg	1	0.025		03/20/01
X0190	XG.2001.330-1	56-23-5	Carbon tetrachloride	ND	mg / Kg	1	0.005		03/2
X0190	XG.2001.330-1	108-90-7	Chlorobenzene	ND	mg / Kg	1	0.005		03/2
X0190	XG.2001.330-1	124-48-1	Chlorodibromomethane	ND	mg / Kg	1	0.005		03/20/01
X0190	XG.2001.330-1	75-00-3	Chloroethane	ND	mg / Kg	1	0.025		03/20/01
X0190	XG.2001.330-1	67-66-3	Chloroform	ND	mg / Kg	1	0.005		03/20/01
X0190	XG.2001.330-1	74-87-3	Chloromethane	ND	mg / Kg	1	0.025		03/20/01
X0190	XG.2001.330-1	156-59-2	cis-1,2 dichloroethene	ND	mg / Kg	1	0.005		03/20/01
X0190	XG.2001.330-1	10061-01-5	cis-1,3 dichloropropene	ND	mg / Kg	1	0.005		03/20/01
X0190	XG.2001.330-1	74-95-3	Dibromomethane	ND	mg / Kg	1	0.005		03/20/01
X0190	XG.2001.330-1	97-63-2	Ethyl methacrylate	ND	mg / Kg	1	0.025		03/20/01
X0190	XG.2001.330-1	100-41-4	Ethylbenzene	ND	mg / Kg	1	0.005		03/20/01
X0190	XG.2001.330-1		Freon 113	ND	mg / Kg	1	0.025		03/20/01
X0190	XG.2001.330-1	75-71-8	Freon 12	ND	mg / Kg	1	0.05		03/20/01
X0190	XG.2001.330-1	74-88-4	Iodomethane	ND	mg / Kg	1	0.025		03/20/01
X0190	XG.2001.330-1	1634-04-4	Methyl t-butyl ether (MTBE)	ND	mg / Kg	1	0.005		03/20/01
X0190	XG.2001.330-1	75-09-2	Methylene chloride	ND	mg / Kg	1	0.05		03/20/01
X0190	XG.2001.330-1	91-20-3	Naphthalene	ND	mg / Kg	1	0.025		03/20/01
X0190	XG.2001.330-1	95-47-6	o-Xylene	ND	mg / Kg	1	0.005		03/20/01
X0190	XG.2001.330-1	108-38-3/106-42	p/m Xylenes	ND	mg / Kg	1	0.01		03/20/01
X0190	XG.2001.330-1	100-42-5	Styrene	ND	mg / Kg	1	0.005		03/20/01
X0190	XG.2001.330-1	156-60-5	t-1,2 Dichloroethene	ND	mg / Kg	1	0.005		03/20/01
X0190	XG.2001.330-1	10061-02-6	t-1,3 Dichloropropene	ND	mg / Kg	1	0.005		03/20/01
X0190	XG.2001.330-1	127-18-4	Tetrachloroethene	ND	mg / Kg	1	0.005		03/20/01
X0190	XG.2001.330-1	108-88-3	Toluene	ND	mg / Kg	1	0.005		03/20/01
X0190	XG.2001.330-1	79-01-6	Trichloroethene	ND	mg / Kg	1	0.005		03/20/01
X0190	XG.2001.330-1	75-69-4	Trichlorofluoromethane	ND	mg / Kg	1	0.025		03/20
X0190	XG.2001.330-1	108-05-4	Vinyl acetate	ND	mg / Kg	1	0.025		03/2

Explanation of codes

D	*Not applicable due to sample dilution*
L	*Not applicable due to MDL proximity*

Client: CH2MHILL

Project: 0103111 160660.02.FF.SA

X0190	XG.2001.330-1	75-01-4	Vinyl chloride	ND	mg / Kg	1	0.025		03/20/01
X0190-025		SW846 8260A Purgeable VOCs by GC/MS							
X0190	XG.2001.339-1	75-34-3	1,1 Dichloroethane	ND	mg / Kg	1	0.005		03/21/01
X0190	XG.2001.339-1	75-34-3	1,1 Dichloroethene	ND	mg / Kg	1	0.005		03/21/01
X0190	XG.2001.339-1	71-55-6	1,1,1 Trichloroethane	ND	mg / Kg	1	0.005		03/21/01
X0190	XG.2001.339-1	630-20-6	1,1,1,2 Tetrachloroethane	ND	mg / Kg	1	0.005		03/21/01
X0190	XG.2001.339-1	79-00-5	1,1,2 Trichloroethane	ND	mg / Kg	1	0.005		03/21/01
X0190	XG.2001.339-1	79-34-5	1,1,2,2 Tetrachloroethane	ND	mg / Kg	1	0.005		03/21/01
X0190	XG.2001.339-1	106-93-4	1,2 Dibromoethane (EDB)	ND	mg / Kg	1	0.005		03/21/01
X0190	XG.2001.339-1	95-50-1	1,2 Dichlorobenzene	ND	mg / Kg	1	0.005		03/21/01
X0190	XG.2001.339-1	107-06-2	1,2 Dichloroethane	ND	mg / Kg	1	0.005		03/21/01
X0190	XG.2001.339-1	78-87-5	1,2 Dichloropropane	ND	mg / Kg	1	0.005		03/21/01
X0190	XG.2001.339-1	96-18-4	1,2,3 Trichloropropane	ND	mg / Kg	1	0.005		03/21/01
X0190	XG.2001.339-1	95-63-6	1,2,4-Trimethylbenzene	ND	mg / Kg	1	0.005		03/21/01
X0190	XG.2001.339-1	541-73-1	1,3 Dichlorobenzene	ND	mg / Kg	1	0.005		03/21/01
X0190	XG.2001.339-1	108-67-8	1,3,5-Trimethylbenzene	ND	mg / Kg	1	0.005		03/21/01
X0190	XG.2001.339-1	764-41-0	1,4 Dichloro-2-butene	ND	mg / Kg	1	0.05		03/21/01
X0190	XG.2001.339-1	106-46-7	1,4 Dichlorobenzene	ND	mg / Kg	1	0.005		03/21/01
X0190	XG.2001.339-1	78-93-3	2-Butanone (MEK)	ND	mg / Kg	1	0.025		03/21/01
X0190	XG.2001.339-1	110-75-8	2-Chloroethylvinylether	ND	mg / Kg	1	0.025		03/21/01
X0190	XG.2001.339-1	591-78-6	2-Hexanone (MBK)	ND	mg / Kg	1	0.025		03/21/01
X0190	XG.2001.339-1	108-10-1	4-Methyl-2-pentanone (MIBK)	ND	mg / Kg	1	0.025		03/21/01
[illegible]	XG.2001.339-1	67-64-1	Acetone	ND	mg / Kg	1	0.05		03/21/01
[illegible]	XG.2001.339-1	107-02-8	Acrolein	ND	mg / Kg	1	0.1		03/21/01
X0190	XG.2001.339-1	107-13-1	Acrylonitrile	ND	mg / Kg	1	0.1		03/21/01
X0190	XG.2001.339-1	71-43-2	Benzene	ND	mg / Kg	1	0.005		03/21/01
X0190	XG.2001.339-1	75-27-4	Bromodichloromethane	ND	mg / Kg	1	0.005		03/21/01
X0190	XG.2001.339-1	75-25-2	Bromoform	ND	mg / Kg	1	0.005		03/21/01
X0190	XG.2001.339-1	74-83-9	Bromomethane	ND	mg / Kg	1	0.025		03/21/01
X0190	XG.2001.339-1	75-15-0	Carbon disulfide	ND	mg / Kg	1	0.025		03/21/01
X0190	XG.2001.339-1	56-23-5	Carbon tetrachloride	ND	mg / Kg	1	0.005		03/21/01
X0190	XG.2001.339-1	108-90-7	Chlorobenzene	ND	mg / Kg	1	0.005		03/21/01
X0190	XG.2001.339-1	124-48-1	Chlorodibromomethane	ND	mg / Kg	1	0.005		03/21/01
X0190	XG.2001.339-1	75-00-3	Chloroethane	ND	mg / Kg	1	0.025		03/21/01
X0190	XG.2001.339-1	67-66-3	Chloroform	ND	mg / Kg	1	0.005		03/21/01
X0190	XG.2001.339-1	74-87-3	Chloromethane	ND	mg / Kg	1	0.025		03/21/01
X0190	XG.2001.339-1	156-59-2	cis-1,2 dichloroethene	ND	mg / Kg	1	0.005		03/21/01
X0190	XG.2001.339-1	10061-01-5	cis-1,3 dichloropropene	ND	mg / Kg	1	0.005		03/21/01
X0190	XG.2001.339-1	74-95-3	Dibromomethane	ND	mg / Kg	1	0.005		03/21/01
X0190	XG.2001.339-1	97-63-2	Ethyl methacrylate	ND	mg / Kg	1	0.025		03/21/01
X0190	XG.2001.339-1	100-41-4	Ethylbenzene	ND	mg / Kg	1	0.005		03/21/01
X0190	XG.2001.339-1		Freon 113	ND	mg / Kg	1	0.025		03/21/01
X0190	XG.2001.339-1	75-71-8	Freon 12	ND	mg / Kg	1	0.05		03/21/01
X0190	XG.2001.339-1	74-88-4	Iodomethane	ND	mg / Kg	1	0.025		03/21/01
X0190	XG.2001.339-1	1634-04-4	Methyl t-butyl ether (MTBE)	ND	mg / Kg	1	0.005		03/21/01
X0190	XG.2001.339-1	75-09-2	Methylene chloride	ND	mg / Kg	1	0.05		03/21/01
X0190	XG.2001.339-1	91-20-3	Naphthalene	ND	mg / Kg	1	0.025		03/21/01
X0190	XG.2001.339-1	95-47-6	o-Xylene	ND	mg / Kg	1	0.005		03/21/01
[illegible]	XG.2001.339-1	108-38-3/106-42	p/m Xylenes	ND	mg / Kg	1	0.01		03/21/01

Quality Control Summary

Client: **CH2MHILL**

Project: **0103111** **160660.02.FF.SA**

Explanation of codes

D	*Not applicable due to sample diluti*
L	*Not applicable due to MDL proximity*

X0190	XG.2001.339-1	100-42-5	Styrene	ND	mg / Kg	1	0.005	03/21/01
X0190	XG.2001.339-1	156-60-5	t-1,2 Dichloroethene	ND	mg / Kg	1	0.005	03/21/01
X0190	XG.2001.339-1	10061-02-6	t-1,3 Dichloropropene	ND	mg / Kg	1	0.005	03/21/01
X0190	XG.2001.339-1	127-18-4	Tetrachloroethene	ND	mg / Kg	1	0.005	03/21/01
X0190	XG.2001.339-1	108-88-3	Toluene	ND	mg / Kg	1	0.005	03/21/01
X0190	XG.2001.339-1	79-01-6	Trichloroethene	ND	mg / Kg	1	0.005	03/21/01
X0190	XG.2001.339-1	75-69-4	Trichlorofluoromethane	ND	mg / Kg	1	0.025	03/21/01
X0190	XG.2001.339-1	108-05-4	Vinyl acetate	ND	mg / Kg	1	0.025	03/21/01
X0190	XG.2001.339-1	75-01-4	Vinyl chloride	ND	mg / Kg	1	0.025	03/21/01

QC Type **MS: Matrix Spike** QC Matrix **SOLID**

QC Group	Run Sequence	CAS #	Analyte	Result	Units	Dilution Factor	Detection Limit	Code	Run Date
X0163-005		**SW846 8260A Purgeable VOCs by GC/MS**							
X0163	XG.2001.240-5	75-34-3	1,1 Dichloroethene	110	% Recovery	1	NA		02/21/01
X0163	XG.2001.240-5	106-46-7	1,4 Dichlorobenzene	106	% Recovery	1	NA		02/21/01
X0163	XG.2001.240-5	71-43-2	Benzene	112	% Recovery	1	NA		02/21/01
X0163	XG.2001.240-5	108-90-7	Chlorobenzene	108	% Recovery	1	NA		02/21/01
X0163	XG.2001.240-5	108-88-3	Toluene	115	% Recovery	1	NA		02/21/01
X0163	XG.2001.240-5	79-01-6	Trichloroethene	105	% Recovery	1	NA		02/21/01
X0167-005		**SW846 3550A/8270B SVOCs by GC/MS**							
X0167	XG.2001.223-5	120-82-1	1,2,4-Trichlorobenzene	85	% Recovery	1	NA		02/22/01
X0167	XG.2001.223-5	121-14-2	2,4-Dinitrotoluene	89	% Recovery	1	NA		02/22/01
X0167	XG.2001.223-5	95-57-8	2-Chlorophenol	92	% Recovery	1	NA		02/22/01
X0167	XG.2001.223-5	59-50-7	4-Chloro-3-methylphenol	98	% Recovery	1	NA		02/22/01
X0167	XG.2001.223-5	100-02-7	4-Nitrophenol	110	% Recovery	1	NA		02/22/01
X0167	XG.2001.223-5	83-32-9	Acenaphthene	105	% Recovery	1	NA		02/22/01
X0167	XG.2001.223-5	117-84-0	di-n-Octylpthalate	115	% Recovery	1	NA		02/22/01
X0167	XG.2001.223-5	621-64-7	n-Nitroso-di-n-propylamine	98	% Recovery	1	NA		02/22/01
X0167	XG.2001.223-5	87-86-5	Pentachlorophenol	115	% Recovery	1	NA		02/22/01
X0167	XG.2001.223-5	108-95-2	Phenol	86	% Recovery	1	NA		02/22/01
X0167	XG.2001.223-5	129-00-0	Pyrene	103	% Recovery	1	NA		02/22/01
X0182-006		**SW846 5030A/8015A GRO by GC/FID**							
X0182	XG.2001.271-6		Gasoline Range Organics	94	% Recovery	1	NA		03/08/01
X0183-012		**SW846 ME/8015A Diesel Range Organics by GC/FID**							
X0183	XG.2001.276-11		Diesel Range Organics	87	% Recovery	1	NA		03/08/01
X0190-005		**SW846 8260A Purgeable VOCs by GC/MS**							
X0190	XG.2001.300-5	75-34-3	1,1 Dichloroethene	118	% Recovery	1	NA		03/13/01
X0190	XG.2001.300-5	106-46-7	1,4 Dichlorobenzene	102	% Recovery	1	NA		03/13/01
X0190	XG.2001.300-5	71-43-2	Benzene	112	% Recovery	1	NA		03/13/01
X0190	XG.2001.300-5	108-90-7	Chlorobenzene	107	% Recovery	1	NA		03/13/01
X0190	XG.2001.300-5	108-88-3	Toluene	111	% Recovery	1	NA		03/13/01
X0190	XG.2001.300-5	79-01-6	Trichloroethene	111	% Recovery	1	NA		03/13/01

Quality Control Summary

Explanation of codes

D	*Not applicable due to sample dilution*
L	*Not applicable due to MDL proximity*

Client: **CH2MHILL**

Project: **0103111** **160660.02.FF.SA**

QC Type **MSD: Matrix Spike Duplicate Accuracy** QC Matrix **SOLID**

QC Group	Run Sequence	CAS #	Analyte	Result	Units	Dilution Factor	Detection Limit	Code	Run Date
X0163-006		**SW846 8260A Purgeable VOCs by GC/MS**							
X0163	XG.2001.240-6	75-34-3	1,1 Dichloroethene	105	% Recovery	1	NA		02/21/01
X0163	XG.2001.240-6	106-46-7	1,4 Dichlorobenzene	103	% Recovery	1	NA		02/21/01
X0163	XG.2001.240-6	71-43-2	Benzene	108	% Recovery	1	NA		02/21/01
X0163	XG.2001.240-6	108-90-7	Chlorobenzene	106	% Recovery	1	NA		02/21/01
X0163	XG.2001.240-6	108-88-3	Toluene	112	% Recovery	1	NA		02/21/01
X0163	XG.2001.240-6	79-01-6	Trichloroethene	101	% Recovery	1	NA		02/21/01
X0167-006		**SW846 3550A/8270B SVOCs by GC/MS**							
X0167	XG.2001.223-6	120-82-1	1,2,4-Trichlorobenzene	70	% Recovery	1	NA		02/22/01
X0167	XG.2001.223-6	121-14-2	2,4-Dinitrotoluene	75	% Recovery	1	NA		02/22/01
X0167	XG.2001.223-6	95-57-8	2-Chlorophenol	75	% Recovery	1	NA		02/22/01
X0167	XG.2001.223-6	59-50-7	4-Chloro-3-methylphenol	83	% Recovery	1	NA		02/22/01
X0167	XG.2001.223-6	100-02-7	4-Nitrophenol	94	% Recovery	1	NA		02/22/01
X0167	XG.2001.223-6	83-32-9	Acenaphthene	86	% Recovery	1	NA		02/22/01
X0167	XG.2001.223-6	117-84-0	di-n-Octylpthalate	93	% Recovery	1	NA		02/22/01
X0167	XG.2001.223-6	621-64-7	n-Nitroso-di-n-propylamine	82	% Recovery	1	NA		02/22/01
X0167	XG.2001.223-6	87-86-5	Pentachlorophenol	96	% Recovery	1	NA		02/22/01
[illegible]	XG.2001.223-6	108-95-2	Phenol	72	% Recovery	1	NA		02/22/01
X0167	XG.2001.223-6	129-00-0	Pyrene	85	% Recovery	1	NA		02/22/01
X0182-007		**SW846 5030A/8015A GRO by GC/FID**							
X0182	XG.2001.271-7		Gasoline Range Organics	106	% Recovery	1	NA		03/08/01
X0183-006		**SW846 ME/8015A Diesel Range Organics by GC/FID**							
X0183	XG.2001.276-5		Diesel Range Organics	92	% Recovery	1	NA		03/08/01
X0190-006		**SW846 8260A Purgeable VOCs by GC/MS**							
X0190	XG.2001.300-6	75-34-3	1,1 Dichloroethene	120	% Recovery	1	NA		03/13/01
X0190	XG.2001.300-6	106-46-7	1,4 Dichlorobenzene	105	% Recovery	1	NA		03/13/01
X0190	XG.2001.300-6	71-43-2	Benzene	114	% Recovery	1	NA		03/13/01
X0190	XG.2001.300-6	108-90-7	Chlorobenzene	112	% Recovery	1	NA		03/13/01
X0190	XG.2001.300-6	108-88-3	Toluene	114	% Recovery	1	NA		03/13/01
X0190	XG.2001.300-6	79-01-6	Trichloroethene	112	% Recovery	1	NA		03/13/01

QC Type **MSD: Matrix Spike Duplicate Precision** QC Matrix **SOLID**

QC Group	Run Sequence	CAS #	Analyte	Result	Units	Dilution Factor	Detection Limit	Code	Run Date
X0163-006		**SW846 8260A Purgeable VOCs by GC/MS**							
X0163	XG.2001.240-6	75-34-3	1,1 Dichloroethene	5	RPD	1	NA		02/21/01
X0163	XG.2001.240-6	106-46-7	1,4 Dichlorobenzene	3	RPD	1	NA		02/21/01
X0163	XG.2001.240-6	71-43-2	Benzene	4	RPD	1	NA		02/21/01
[illegible]	XG.2001.240-6	108-90-7	Chlorobenzene	2	RPD	1	NA		02/21/01
[illegible]	XG.2001.240-6	108-88-3	Toluene	3	RPD	1	NA		02/21/01

Quality Control Summary

Client: **CH2MHILL**

Project: **0103111** **160660.02.FF.SA**

Explanation of codes	
D	*Not applicable due to sample dilut*
L	*Not applicable due to MDL proxim*

X0163	XG.2001.240-6	79-01-6	Trichloroethene	4	RPD	1	NA		02/21/0
X0167-006		**SW846 3550A/8270B SVOCs by GC/MS**							
X0167	XG.2001.223-6	120-82-1	1,2,4-Trichlorobenzene	20	RPD	1	NA		02/22/0
X0167	XG.2001.223-6	121-14-2	2,4-Dinitrotoluene	18	RPD	1	NA		02/22/0
X0167	XG.2001.223-6	95-57-8	2-Chlorophenol	20	RPD	1	NA		02/22/0
X0167	XG.2001.223-6	59-50-7	4-Chloro-3-methylphenol	17	RPD	1	NA		02/22/0
X0167	XG.2001.223-6	100-02-7	4-Nitrophenol	16	RPD	1	NA		02/22/0
X0167	XG.2001.223-6	83-32-9	Acenaphthene	19	RPD	1	NA		02/22/0
X0167	XG.2001.223-6	117-84-0	di-n-Octylpthalate	21	RPD	1	NA		02/22/0
X0167	XG.2001.223-6	621-64-7	n-Nitroso-di-n-propylamine	18	RPD	1	NA		02/22/0
X0167	XG.2001.223-6	87-86-5	Pentachlorophenol	18	RPD	1	NA		02/22/0
X0167	XG.2001.223-6	108-95-2	Phenol	18	RPD	1	NA		02/22/0
X0167	XG.2001.223-6	129-00-0	Pyrene	19	RPD	1	NA		02/22/0
X0182-007		**SW846 5030A/8015A GRO by GC/FID**							
X0182	XG.2001.271-7		Gasoline Range Organics	11	RPD	1	NA		03/08/0
X0183-006		**SW846 ME/8015A Diesel Range Organics by GC/FID**							
X0183	XG.2001.276-5		Diesel Range Organics	5	RPD	1	NA		03/08/0
X0190-006		**SW846 8260A Purgeable VOCs by GC/MS**							
X0190	XG.2001.300-6	75-34-3	1,1 Dichloroethene	2	RPD	1	NA		03/13/0
X0190	XG.2001.300-6	106-46-7	1,4 Dichlorobenzene	3	RPD	1	NA		03/13/0
X0190	XG.2001.300-6	71-43-2	Benzene	2	RPD	1	NA		03/13/0
X0190	XG.2001.300-6	108-90-7	Chlorobenzene	4	RPD	1	NA		03/13
X0190	XG.2001.300-6	108-88-3	Toluene	2	RPD	1	NA		03/13
X0190	XG.2001.300-6	79-01-6	Trichloroethene	1	RPD	1	NA		03/13/0

Surrogate Summary: QC

Client: **CH2MHILL**

Project: **0103111** **160660.02.FF.SA**

QC Type **LCS** QC Matrix **SOLID**

QC Group	Run Sequence	CAS #	Analyte	Result	Units	Dilution Factor	Detection Limit	Code	Run Date
X0163-002		**8260**							
X0163	XG.2001.240-2	NA	1,2 Dichloroethane-D4 (SS)	114	% Recovery	1	NA		02/21/01
X0163	XG.2001.240-2	NA	4-Bromofluorobenzene (SS)	109	% Recovery	1	NA		02/21/01
X0163	XG.2001.240-2	NA	Dibromofluoromethane (SS)	104	% Recovery	1	NA		02/21/01
X0163	XG.2001.240-2	NA	Toluene-D8 (SS)	103	% Recovery	1	NA		02/21/01
X0167-002		**8270**							
X0167	XG.2001.223-2	NA	*2,4,6-TRIBROMOPHENOL	96	% Recovery	1	NA		02/22/01
X0167	XG.2001.223-2	NA	*2-FLUOROBIPHENYL	84	% Recovery	1	NA		02/22/01
X0167	XG.2001.223-2	NA	*2-FLUOROPHENOL	67	% Recovery	1	NA		02/22/01
X0167	XG.2001.223-2	NA	*NITROBENZENE-D5	78	% Recovery	1	NA		02/22/01
X0167	XG.2001.223-2	NA	*PHENOL-D6	77	% Recovery	1	NA		02/22/01
X0167	XG.2001.223-2	NA	*TERPHENYL-D14	87	% Recovery	1	NA		02/22/01
X0182-002		**GRO**							
X0182	XG.2001.271-2	NA	4-Bromofluorobenzene-FID	105	% Recovery	1	NA		03/07/01
X0182	XG.2001.271-2	NA	4-Bromofluorobenzene-PID	4490	% Recovery	1	NA		03/07/01
X0182	XG.2001.271-2	NA	aaa-Trifluorotoluene-FID	105	% Recovery	1	NA		03/07/01
[illegible]	XG.2001.271-2	NA	aaa-Trifluorotoluene-PID	2160	% Recovery	1	NA		03/07/01
X0183-002		**DRO**							
X0183	XG.2001.276-2	NA	O-terphenyl	105	% Recovery	1	NA		03/08/01
X0190-007		**8260**							
X0190	XG.2001.300-7	NA	1,2 Dichloroethane-D4 (SS)	93	% Recovery	1	NA		03/13/01
X0190	XG.2001.300-7	NA	4-Bromofluorobenzene (SS)	102	% Recovery	1	NA		03/13/01
X0190	XG.2001.300-7	NA	Dibromofluoromethane (SS)	97	% Recovery	1	NA		03/13/01
X0190	XG.2001.300-7	NA	Toluene-D8 (SS)	102	% Recovery	1	NA		03/13/01

QC Type **LCSD** QC Matrix **SOLID**

QC Group	Run Sequence	CAS #	Analyte	Result	Units	Dilution Factor	Detection Limit	Code	Run Date
X0163-003		**8260**							
X0163	XG.2001.240-3	NA	1,2 Dichloroethane-D4 (SS)	112	% Recovery	1	NA		02/21/01
X0163	XG.2001.240-3	NA	4-Bromofluorobenzene (SS)	107	% Recovery	1	NA		02/21/01
X0163	XG.2001.240-3	NA	Dibromofluoromethane (SS)	103	% Recovery	1	NA		02/21/01
X0163	XG.2001.240-3	NA	Toluene-D8 (SS)	103	% Recovery	1	NA		02/21/01
X0167-003		**8270**							
X0167	XG.2001.223-3	NA	*2,4,6-TRIBROMOPHENOL	96	% Recovery	1	NA		02/22/01
X0167	XG.2001.223-3	NA	*2-FLUOROBIPHENYL	86	% Recovery	1	NA		02/22/01
X0167	XG.2001.223-3	NA	*2-FLUOROPHENOL	68	% Recovery	1	NA		02/22/01
[illegible]	XG.2001.223-3	NA	*NITROBENZENE-D5	77	% Recovery	1	NA		02/22/01
X0167	XG.2001.223-3	NA	*PHENOL-D6	78	% Recovery	1	NA		02/22/01

Surrogate Summary: QC

Client: **CH2MHILL**

Project: **0103111** **160660.02.FF.SA**

X0167	XG.2001.223-3	NA	*TERPHENYL-D14	86	% Recovery	1	NA		02/22/01
X0182-003		GRO							
X0182	XG.2001.271-3	NA	4-Bromofluorobenzene-FID	103	% Recovery	1	NA		03/07/01
X0182	XG.2001.271-3	NA	4-Bromofluorobenzene-PID	504	% Recovery	1	NA		03/07/01
X0182	XG.2001.271-3	NA	aaa-Trifluorotoluene-FID	105	% Recovery	1	NA		03/07/01
X0182	XG.2001.271-3	NA	aaa-Trifluorotoluene-PID	827	% Recovery	1	NA		03/07/01
X0183-003		DRO							
X0183	XG.2001.276-3	NA	O-terphenyl	102	% Recovery	1	NA		03/08/01
X0190-008		8260							
X0190	XG.2001.300-8	NA	1,2 Dichloroethane-D4 (SS)	90	% Recovery	1	NA		03/13/01
X0190	XG.2001.300-8	NA	4-Bromofluorobenzene (SS)	99	% Recovery	1	NA		03/13/01
X0190	XG.2001.300-8	NA	Dibromofluoromethane (SS)	99	% Recovery	1	NA		03/13/01
X0190	XG.2001.300-8	NA	Toluene-D8 (SS)	101	% Recovery	1	NA		03/13/01

QC Type **MB** QC Matrix **SOLID**

QC Group	Run Sequence	CAS #	Analyte	Result	Units	Dilution Factor	Detection Limit	Code	Run Date
X0163-001		8260							
X0163	XG.2001.240-1	NA	1,2 Dichloroethane-D4 (SS)	113	% Recovery	1	NA		02/21/01
X0163	XG.2001.240-1	NA	4-Bromofluorobenzene (SS)	105	% Recovery	1	NA		02/2[illegible]
X0163	XG.2001.240-1	NA	Dibromofluoromethane (SS)	103	% Recovery	1	NA		02/21/[illegible]
X0163	XG.2001.240-1	NA	Toluene-D8 (SS)	102	% Recovery	1	NA		02/21/01
X0163-008		8260							
X0163	XG.2001.240-8	NA	1,2 Dichloroethane-D4 (SS)	98	% Recovery	1	NA		02/22/01
X0163	XG.2001.240-8	NA	4-Bromofluorobenzene (SS)	102	% Recovery	1	NA		02/22/01
X0163	XG.2001.240-8	NA	Dibromofluoromethane (SS)	102	% Recovery	1	NA		02/22/01
X0163	XG.2001.240-8	NA	Toluene-D8 (SS)	100	% Recovery	1	NA		02/22/01
X0163-017		8260							
X0163	XG.2001.240-16	NA	1,2 Dichloroethane-D4 (SS)	85	% Recovery	1	NA		02/23/01
X0163	XG.2001.240-16	NA	4-Bromofluorobenzene (SS)	101	% Recovery	1	NA		02/23/01
X0163	XG.2001.240-16	NA	Dibromofluoromethane (SS)	96	% Recovery	1	NA		02/23/01
X0163	XG.2001.240-16	NA	Toluene-D8 (SS)	99	% Recovery	1	NA		02/23/01
X0163-034		8260							
X0163	XG.2001.240-26	NA	1,2 Dichloroethane-D4 (SS)	91	% Recovery	1	NA		02/26/01
X0163	XG.2001.240-26	NA	4-Bromofluorobenzene (SS)	98	% Recovery	1	NA		02/26/01
X0163	XG.2001.240-26	NA	Dibromofluoromethane (SS)	100	% Recovery	1	NA		02/26/01
X0163	XG.2001.240-26	NA	Toluene-D8 (SS)	102	% Recovery	1	NA		02/26/01
X0163-035		8260							
X0163	XG.2001.242-1	NA	1,2 Dichloroethane-D4 (SS)	92	% Recovery	1	NA		02/27/01
X0163	XG.2001.242-1	NA	4-Bromofluorobenzene (SS)	98	% Recovery	1	NA		02/27/01
X0163	XG.2001.242-1	NA	Dibromofluoromethane (SS)	101	% Recovery	1	NA		02/27/01
X0163	XG.2001.242-1	NA	Toluene-D8 (SS)	100	% Recovery	1	NA		02/27/01
X0163-042		8260							
X0163	XG.2001.273-1	NA	1,2 Dichloroethane-D4 (SS)	91	% Recovery	1	NA		03/0[illegible]

Surrogate Summary: QC

Client: **CH2MHILL**

Project: **0103111** **160660.02.FF.SA**

X0163	XG.2001.273-1	NA	4-Bromofluorobenzene (SS)	97	% Recovery	1	NA		03/06/01
X0163	XG.2001.273-1	NA	Dibromofluoromethane (SS)	100	% Recovery	1	NA		03/06/01
X0163	XG.2001.273-1	NA	Toluene-D8 (SS)	101	% Recovery	1	NA		03/06/01
X0163-050		**8260**							
X0163	XG.2001.273-7	NA	1,2 Dichloroethane-D4 (SS)	88	% Recovery	1	NA		03/08/01
X0163	XG.2001.273-7	NA	4-Bromofluorobenzene (SS)	98	% Recovery	1	NA		03/08/01
X0163	XG.2001.273-7	NA	Dibromofluoromethane (SS)	99	% Recovery	1	NA		03/08/01
X0163	XG.2001.273-7	NA	Toluene-D8 (SS)	100	% Recovery	1	NA		03/08/01
X0167-001		**8270**							
X0167	XG.2001.223-1	NA	*2,4,6-TRIBROMOPHENOL	66	% Recovery	1	NA		02/22/01
X0167	XG.2001.223-1	NA	*2-FLUOROBIPHENYL	60	% Recovery	1	NA		02/22/01
X0167	XG.2001.223-1	NA	*2-FLUOROPHENOL	50	% Recovery	1	NA		02/22/01
X0167	XG.2001.223-1	NA	*NITROBENZENE-D5	58	% Recovery	1	NA		02/22/01
X0167	XG.2001.223-1	NA	*PHENOL-D6	58	% Recovery	1	NA		02/22/01
X0167	XG.2001.223-1	NA	*TERPHENYL-D14	62	% Recovery	1	NA		02/22/01
X0167-009		**8270**							
X0167	XG.2001.235-1	NA	*2,4,6-TRIBROMOPHENOL	93	% Recovery	1	NA		02/23/01
X0167	XG.2001.235-1	NA	*2-FLUOROBIPHENYL	81	% Recovery	1	NA		02/23/01
X0167	XG.2001.235-1	NA	*2-FLUOROPHENOL	69	% Recovery	1	NA		02/23/01
X0167	XG.2001.235-1	NA	*NITROBENZENE-D5	76	% Recovery	1	NA		02/23/01
X0167	XG.2001.235-1	NA	*PHENOL-D6	80	% Recovery	1	NA		02/23/01
X0167	XG.2001.235-1	NA	*TERPHENYL-D14	89	% Recovery	1	NA		02/23/01
X[illegible]-016		**8270**							
X0167	XG.2001.269-4	NA	*2,4,6-TRIBROMOPHENOL	90	% Recovery	1	NA		03/06/01
X0167	XG.2001.269-4	NA	*2-FLUOROBIPHENYL	90	% Recovery	1	NA		03/06/01
X0167	XG.2001.269-4	NA	*2-FLUOROPHENOL	77	% Recovery	1	NA		03/06/01
X0167	XG.2001.269-4	NA	*NITROBENZENE-D5	84	% Recovery	1	NA		03/06/01
X0167	XG.2001.269-4	NA	*PHENOL-D6	87	% Recovery	1	NA		03/06/01
X0167	XG.2001.269-4	NA	*TERPHENYL-D14	96	% Recovery	1	NA		03/06/01
X0167-021		**8270**							
X0167	XG.2001.326-1	NA	*2,4,6-TRIBROMOPHENOL	84	% Recovery	1	NA		03/19/01
X0167	XG.2001.326-1	NA	*2-FLUOROBIPHENYL	84	% Recovery	1	NA		03/19/01
X0167	XG.2001.326-1	NA	*2-FLUOROPHENOL	69	% Recovery	1	NA		03/19/01
X0167	XG.2001.326-1	NA	*NITROBENZENE-D5	84	% Recovery	1	NA		03/19/01
X0167	XG.2001.326-1	NA	*PHENOL-D6	73	% Recovery	1	NA		03/19/01
X0167	XG.2001.326-1	NA	*TERPHENYL-D14	90	% Recovery	1	NA		03/19/01
X0182-001		**GRO**							
X0182	XG.2001.271-1	NA	4-Bromofluorobenzene-FID	89	% Recovery	1	NA		03/07/01
X0182	XG.2001.271-1	NA	4-Bromofluorobenzene-PID	ND	% Recovery	1	NA		03/07/01
X0182	XG.2001.271-1	NA	aaa-Trifluorotoluene-FID	101	% Recovery	1	NA		03/07/01
X0182	XG.2001.271-1	NA	aaa-Trifluorotoluene-PID	22	% Recovery	1	NA		03/07/01
X0182-012		**GRO**							
X0182	XG.2001.294-1	NA	4-Bromofluorobenzene-FID	100	% Recovery	1	NA		03/08/01
X0182	XG.2001.294-1	NA	4-Bromofluorobenzene-PID	ND	% Recovery	1	NA		03/08/01
X0182	XG.2001.294-1	NA	aaa-Trifluorotoluene-FID	85	% Recovery	1	NA		03/08/01
X[illegible]	XG.2001.294-1	NA	aaa-Trifluorotoluene-PID	ND	% Recovery	1	NA		03/08/01

Surrogate Summary: QC

Client: **CH2MHILL**

Project: **0103111** **160660.02.FF.SA**

X0182-023		GRO							
X0182	XG.2001.294-10	NA	4-Bromofluorobenzene-FID	90	% Recovery	1	NA		03/12/01
X0182	XG.2001.294-10	NA	4-Bromofluorobenzene-PID	204	% Recovery	1	NA		03/12/01
X0182	XG.2001.294-10	NA	aaa-Trifluorotoluene-FID	102	% Recovery	1	NA		03/12/01
X0182	XG.2001.294-10	NA	aaa-Trifluorotoluene-PID	ND	% Recovery	1	NA		03/12/01
X0182-026		GRO							
X0182	XG.2001.297-1	NA	4-Bromofluorobenzene-FID	88	% Recovery	1	NA		03/13/01
X0182	XG.2001.297-1	NA	4-Bromofluorobenzene-PID	70	% Recovery	1	NA		03/13/01
X0182	XG.2001.297-1	NA	aaa-Trifluorotoluene-FID	98	% Recovery	1	NA		03/13/01
X0182	XG.2001.297-1	NA	aaa-Trifluorotoluene-PID	ND	% Recovery	1	NA		03/13/01
X0182-029		GRO							
X0182	XG.2001.297-4	NA	4-Bromofluorobenzene-FID	89	% Recovery	1	NA		03/14/01
X0182	XG.2001.297-4	NA	4-Bromofluorobenzene-PID	ND	% Recovery	1	NA		03/14/01
X0182	XG.2001.297-4	NA	aaa-Trifluorotoluene-FID	101	% Recovery	1	NA		03/14/01
X0182	XG.2001.297-4	NA	aaa-Trifluorotoluene-PID	93	% Recovery	1	NA		03/14/01
X0183-001		DRO							
X0183	XG.2001.276-1	NA	O-terphenyl	88	% Recovery	1	NA		03/08/01
X0183-023		DRO							
X0183	XG.2001.298-1	NA	O-terphenyl	89	% Recovery	1	NA		03/14/01
X0190-001		8260							
X0190	XG.2001.300-1	NA	1,2 Dichloroethane-D4 (SS)	93	% Recovery	1	NA		03/13
X0190	XG.2001.300-1	NA	4-Bromofluorobenzene (SS)	105	% Recovery	1	NA		03/1
X0190	XG.2001.300-1	NA	Dibromofluoromethane (SS)	98	% Recovery	1	NA		03/13/01
X0190	XG.2001.300-1	NA	Toluene-D8 (SS)	104	% Recovery	1	NA		03/13/01
X0190-014		8260							
X0190	XG.2001.300-11	NA	1,2 Dichloroethane-D4 (SS)	90	% Recovery	1	NA		03/14/01
X0190	XG.2001.300-11	NA	4-Bromofluorobenzene (SS)	98	% Recovery	1	NA		03/14/01
X0190	XG.2001.300-11	NA	Dibromofluoromethane (SS)	98	% Recovery	1	NA		03/14/01
X0190	XG.2001.300-11	NA	Toluene-D8 (SS)	101	% Recovery	1	NA		03/14/01
X0190-021		8260							
X0190	XG.2001.330-1	NA	1,2 Dichloroethane-D4 (SS)	98	% Recovery	1	NA		03/20/01
X0190	XG.2001.330-1	NA	4-Bromofluorobenzene (SS)	100	% Recovery	1	NA		03/20/01
X0190	XG.2001.330-1	NA	Dibromofluoromethane (SS)	102	% Recovery	1	NA		03/20/01
X0190	XG.2001.330-1	NA	Toluene-D8 (SS)	102	% Recovery	1	NA		03/20/01
X0190-025		8260							
X0190	XG.2001.339-1	NA	1,2 Dichloroethane-D4 (SS)	98	% Recovery	1	NA		03/21/0
X0190	XG.2001.339-1	NA	4-Bromofluorobenzene (SS)	98	% Recovery	1	NA		03/21/0
X0190	XG.2001.339-1	NA	Dibromofluoromethane (SS)	101	% Recovery	1	NA		03/21/0
X0190	XG.2001.339-1	NA	Toluene-D8 (SS)	102	% Recovery	1	NA		03/21/0

Surrogate Summary: QC

Client: **CH2MHILL**

Project: **0103111** **160660.02.FF.SA**

QC Type **MS** QC Matrix **SOLID**

QC Group	Run Sequence	CAS #	Analyte	Result	Units	Dilution Factor	Detection Limit	Code	Run Date
X0163-005		8260							
X0163	XG.2001.240-5	NA	1,2 Dichloroethane-D4 (SS)	113	% Recovery	1	NA		02/21/01
X0163	XG.2001.240-5	NA	4-Bromofluorobenzene (SS)	108	% Recovery	1	NA		02/21/01
X0163	XG.2001.240-5	NA	Dibromofluoromethane (SS)	103	% Recovery	1	NA		02/21/01
X0163	XG.2001.240-5	NA	Toluene-D8 (SS)	102	% Recovery	1	NA		02/21/01
X0167-005		8270							
X0167	XG.2001.223-5	NA	*2,4,6-TRIBROMOPHENOL	124	% Recovery	1	NA		02/22/01
X0167	XG.2001.223-5	NA	*2-FLUOROBIPHENYL	111	% Recovery	1	NA		02/22/01
X0167	XG.2001.223-5	NA	*2-FLUOROPHENOL	84	% Recovery	1	NA		02/22/01
X0167	XG.2001.223-5	NA	*NITROBENZENE-D5	98	% Recovery	1	NA		02/22/01
X0167	XG.2001.223-5	NA	*PHENOL-D6	96	% Recovery	1	NA		02/22/01
X0167	XG.2001.223-5	NA	*TERPHENYL-D14	107	% Recovery	1	NA		02/22/01
X0182-006		GRO							
X0182	XG.2001.271-6	NA	4-Bromofluorobenzene-FID	102	% Recovery	1	NA		03/08/01
X0182	XG.2001.271-6	NA	4-Bromofluorobenzene-PID	321	% Recovery	1	NA		03/08/01
X0182	XG.2001.271-6	NA	aaa-Trifluorotoluene-FID	105	% Recovery	1	NA		03/08/01
[illegible]	XG.2001.271-6	NA	aaa-Trifluorotoluene-PID	658	% Recovery	1	NA		03/08/01
X0183-012		DRO							
X0183	XG.2001.276-11	NA	O-terphenyl	100	% Recovery	1	NA		03/08/01
X0190-005		8260							
X0190	XG.2001.300-5	NA	1,2 Dichloroethane-D4 (SS)	89	% Recovery	1	NA		03/13/01
X0190	XG.2001.300-5	NA	4-Bromofluorobenzene (SS)	100	% Recovery	1	NA		03/13/01
X0190	XG.2001.300-5	NA	Dibromofluoromethane (SS)	99	% Recovery	1	NA		03/13/01
X0190	XG.2001.300-5	NA	Toluene-D8 (SS)	102	% Recovery	1	NA		03/13/01

QC Type **MSD** QC Matrix **SOLID**

QC Group	Run Sequence	CAS #	Analyte	Result	Units	Dilution Factor	Detection Limit	Code	Run Date
X0163-006		8260							
X0163	XG.2001.240-6	NA	1,2 Dichloroethane-D4 (SS)	114	% Recovery	1	NA		02/21/01
X0163	XG.2001.240-6	NA	4-Bromofluorobenzene (SS)	107	% Recovery	1	NA		02/21/01
X0163	XG.2001.240-6	NA	Dibromofluoromethane (SS)	103	% Recovery	1	NA		02/21/01
X0163	XG.2001.240-6	NA	Toluene-D8 (SS)	103	% Recovery	1	NA		02/21/01
X0167-006		8270							
X0167	XG.2001.223-6	NA	*2,4,6-TRIBROMOPHENOL	100	% Recovery	1	NA		02/22/01
X0167	XG.2001.223-6	NA	*2-FLUOROBIPHENYL	88	% Recovery	1	NA		02/22/01
X0167	XG.2001.223-6	NA	*2-FLUOROPHENOL	68	% Recovery	1	NA		02/22/01
[illegible]7	XG.2001.223-6	NA	*NITROBENZENE-D5	80	% Recovery	1	NA		02/22/01
X0167	XG.2001.223-6	NA	*PHENOL-D6	79	% Recovery	1	NA		02/22/01

Surrogate Summary: QC

Client: **CH2MHILL**

Project: **0103111** **160660.02.FF.SA**

X0167	XG.2001.223-6	NA	*TERPHENYL-D14	87	% Recovery	1	NA		02/22/01
X0182-007		**GRO**							
X0182	XG.2001.271-7	NA	4-Bromofluorobenzene-FID	103	% Recovery	1	NA		03/08/01
X0182	XG.2001.271-7	NA	4-Bromofluorobenzene-PID	ND	% Recovery	1	NA		03/08/01
X0182	XG.2001.271-7	NA	aaa-Trifluorotoluene-FID	105	% Recovery	1	NA		03/08/01
X0182	XG.2001.271-7	NA	aaa-Trifluorotoluene-PID	2880	% Recovery	1	NA		03/08/01
X0183-006		**DRO**							
X0183	XG.2001.276-5	NA	O-terphenyl	106	% Recovery	1	NA		03/08/01
X0190-006		**8260**							
X0190	XG.2001.300-6	NA	1,2 Dichloroethane-D4 (SS)	89	% Recovery	1	NA		03/13/01
X0190	XG.2001.300-6	NA	4-Bromofluorobenzene (SS)	102	% Recovery	1	NA		03/13/01
X0190	XG.2001.300-6	NA	Dibromofluoromethane (SS)	99	% Recovery	1	NA		03/13/01
X0190	XG.2001.300-6	NA	Toluene-D8 (SS)	100	% Recovery	1	NA		03/13/01

Assaigai Analytical Laboratories, Inc.

Surrogate Summary: Fraction

Client: CH2MHILL

Project: 0103111 160660.02.FF.SA

Client Sample ID: **ST 106 SB32 300'** Sample Matrix: **SOIL**

QC Group	Run Sequence	CAS #	Analyte	Result	Units	Dilution Factor	Detection Limit	Code	Run Date
0103111-01A		GRO							X0182-008
X0182	XG.2001.271-8	NA	4-Bromofluorobenzene-FID	95	% Recovery	1	NA		03/08/01
X0182	XG.2001.271-8	NA	4-Bromofluorobenzene-PID	209	% Recovery	1	NA		03/08/01
X0182	XG.2001.271-8	NA	aaa-Trifluorotoluene-FID	103	% Recovery	1	NA		03/08/01
X0182	XG.2001.271-8	NA	aaa-Trifluorotoluene-PID	28	% Recovery	1	NA		03/08/01
0103111-01B		DRO							X0183-008
X0183	XG.2001.276-7	NA	O-terphenyl	99	% Recovery	1	NA		03/08/01

Client Sample ID: **ST 106 SB32 310'** Sample Matrix: **SOIL**

QC Group	Run Sequence	CAS #	Analyte	Result	Units	Dilution Factor	Detection Limit	Code	Run Date
0103111-02A		GRO							X0182-009
X0182	XG.2001.271-9	NA	4-Bromofluorobenzene-FID	88	% Recovery	1	NA		03/08/01
	XG.2001.271-9	NA	4-Bromofluorobenzene-PID	128	% Recovery	1	NA		03/08/01
[illegible]	XG.2001.271-9	NA	aaa-Trifluorotoluene-FID	98	% Recovery	1	NA		03/08/01
X0182	XG.2001.271-9	NA	aaa-Trifluorotoluene-PID	ND	% Recovery	1	NA		03/08/01
0103111-02B		DRO							X0183-009
X0183	XG.2001.276-8	NA	O-terphenyl	97	% Recovery	1	NA		03/08/01
0103111-02C		8260							X0163-054
X0163	XG.2001.273-11	NA	1,2 Dichloroethane-D4 (SS)	84	% Recovery	1	NA		03/08/01
X0163	XG.2001.273-11	NA	4-Bromofluorobenzene (SS)	96	% Recovery	1	NA		03/08/01
X0163	XG.2001.273-11	NA	Dibromofluoromethane (SS)	98	% Recovery	1	NA		03/08/01
X0163	XG.2001.273-11	NA	Toluene-D8 (SS)	99	% Recovery	1	NA		03/08/01

Client Sample ID: **ST 106 SB32 320'** Sample Matrix: **SOIL**

QC Group	Run Sequence	CAS #	Analyte	Result	Units	Dilution Factor	Detection Limit	Code	Run Date
0103111-03A		GRO							X0182-010
X0182	XG.2001.271-10	NA	4-Bromofluorobenzene-FID	92	% Recovery	1	NA		03/08/01
X0182	XG.2001.271-10	NA	4-Bromofluorobenzene-PID	124	% Recovery	1	NA		03/08/01
X0182	XG.2001.271-10	NA	aaa-Trifluorotoluene-FID	101	% Recovery	1	NA		03/08/01
X0182	XG.2001.271-10	NA	aaa-Trifluorotoluene-PID	107	% Recovery	1	NA		03/08/01
0103111-03B		DRO							X0183-010
X0183	XG.2001.276-9	NA	O-terphenyl	87	% Recovery	1	NA		03/08/01

Surrogate Summary: Fraction

Client: **CH2MHILL**
Project: **0103111** **160660.02.FF.SA**

Client Sample ID **ST 106 SB32 330'** Sample Matrix **SOIL**

QC Group	Run Sequence	CAS #	Analyte	Result	Units	Dilution Factor	Detection Limit	Code	Run Date
0103111-04A		GRO							X0182-011
X0182	XG.2001.271-11	NA	4-Bromofluorobenzene-FID	93	% Recovery	1	NA		03/08/0
X0182	XG.2001.271-11	NA	4-Bromofluorobenzene-PID	ND	% Recovery	1	NA		03/08/0
X0182	XG.2001.271-11	NA	aaa-Trifluorotoluene-FID	101	% Recovery	1	NA		03/08/0
X0182	XG.2001.271-11	NA	aaa-Trifluorotoluene-PID	ND	% Recovery	1	NA		03/08/0
0103111-04B		DRO							X0183-011
X0183	XG.2001.276-10	NA	O-terphenyl	96	% Recovery	1	NA		03/08/0
0103111-04C		8260							X0190-002
X0190	XG.2001.300-2	NA	1,2 Dichloroethane-D4 (SS)	91	% Recovery	1	NA		03/13/0
X0190	XG.2001.300-2	NA	4-Bromofluorobenzene (SS)	98	% Recovery	1	NA		03/13/0
X0190	XG.2001.300-2	NA	Dibromofluoromethane (SS)	99	% Recovery	1	NA		03/13/0
X0190	XG.2001.300-2	NA	Toluene-D8 (SS)	101	% Recovery	1	NA		03/13/0
0103111-04D		8270							X0167-022
X0167	XG.2001.326-2	NA	*2,4,6-TRIBROMOPHENOL	80	% Recovery	1	NA		03/19/0
X0167	XG.2001.326-2	NA	*2-FLUOROBIPHENYL	78	% Recovery	1	NA		03/19/0
X0167	XG.2001.326-2	NA	*2-FLUOROPHENOL	62	% Recovery	1	NA		03/19/0
X0167	XG.2001.326-2	NA	*NITROBENZENE-D5	75	% Recovery	1	NA		03/19/
X0167	XG.2001.326-2	NA	*PHENOL-D6	65	% Recovery	1	NA		03/19/0
X0167	XG.2001.326-2	NA	*TERPHENYL-D14	87	% Recovery	1	NA		03/19/0

ASSAIGAI ANALYTICAL LABORATORIES, INC.

CH2MH 3/26/01 L-5

Chain of Custody Record

7000 JEFFERSON N.E.
ALBUQUERQUE, NEW MEXICO 87109
(505) 345-8964

3332 WEDGEWOOD
EL PASO, TEXAS 79925
(915) 593-6000

127 EASTGATE DRIVE, 112-C
LOS ALAMOS, NEW MEXICO 87544
(505) 662-2558

Lab Job No.: C113111 Date: 3-27-1

Page 1 of 1

Client: CH2M HILL

Address: 600 Indian School Rd NE #350

City / State / Zip: ABQ NM 87110

Project Name / Number: KAFB / TO-10

Contract / Purchase Order / Quote:

Project Manager / Contact: HALLORAN

Telephone No.: 884 5600

Fax No.: 883 7507

Samplers: (signature) Wm LeFeyre

AAL Fraction Number	Field Sample Number / Location	Date	Time	Sample Type	Type / Size of Container	Preservation Temp.	Preservation Chemical	No. of Containers	DRO	GRO	BTEX	VOC	SVOC						Remarks
1A,B	ST106 SB32 300'	3-6	1640	Soil	4 oz	ICE	—	2	X	X									
2A,B,C	ST106 SB32 310'	3-6	1735	Soil	4 oz	ICE	—	3	X	X		X							
3A,B	ST106 SB32 320'	3-7	[illegible]	Soil	4 oz	ICE	—	2	X	X									Collected Time=092
4A,B,C,D	ST106 SB32 330'	3-7	1015	Soil	4 oz	ICE	—	4	X	X		X	X						

Relinquished by:	Date	Received by:	Relinquished by:	Date	Received by:
Signature: Wm LeFeyre	3-7-01	Signature: [illegible]	Signature:		Signature:
Printed: WM J LEFEYRE	Time: 1017	Printed: H. BKAZIC	Printed:	Time:	Printed:
Company: CH2M HILL		Company: [illegible]	Company:		Company:
Reason: DROP @ LAB		Reason: [illegible]	Reason:		Reason:

Method of Shipment:

Shipment No.

Special Instructions:

Comments: 24hr TAT ONDRO + GRO

After analysis, samples are to be:

- ❑ Disposed of (additional fee)
- ❑ Stored (30 days max)
- ❑ Stored over 30 days (additional fee)
- ❑ Returned to customer

COURIER

T-146 P.08/08 F-377
FROM-ASSAIGAI LAB
MAR 26 '01 17:11 TO-CH2MHILL

ASSAIGAI
ANALYTICAL
LABORATORIES, INC.
7300 Jefferson, NE • Albuquerque, New Mexico 87109 • (505) 345-8964 • FAX (505) 345-7259
3332 Wedgewood Dr., Suite N • El Paso, Texas 79925 • (915) 593-6000 • FAX (915) 593-7820
127 Eastgate Drive, 212-C • Los Alamos, New Mexico 87544 • (505) 662-2558

RECEIVED APR 13 2001

Explanation of codes

B	*analyte detected in Method Blank*
E	*result is estimated*
H	*analyzed out of hold time*
N	*tentatively identified compound*
S	*subcontracted*
1-9	*see footnote*

CH2MHILL
attn: **AMY HALLORAN**
6001 INDIAN SCHOOL RD NE STE 350
ALBUQUERQUE, NM 87110-4140

Assaigai Analytical Laboratories, Inc.

Certificate of Analysis

Client: **CH2MHILL**
Project: **0103199** **160660.02.FF.SA**

William P. Biava: President of Assaigai Analytical Laboratories, Inc.

Client Sample ID ***ST 106 SB33 90'*** Sample Matrix ***SOIL*** Sample Collected ***03/12/01 16:15:00***

QC Group	Run Sequence	CAS #	Analyte	Result	Units	Dilution Factor	Detection Limit	Code	Run Date
0103199-01A		**SW846 5030A/8015A GRO by GC/FID**							
X0182	XG.2001.297-5		Gasoline Range Organics	ND	mg / Kg	1	0.25		03/14/01
0103199-01B		**SW846 ME/8015A Diesel Range Organics by GC/FID**							
X0183	XG.2001.298-2		Diesel Range Organics	ND	mg / Kg	1	25		03/14/01
0103199-01C		**SW846 5030A/8021B Purgeable VOCs by GC/PID**							
X0177	XG.2001.314-19	71-43-2	Benzene	ND	mg / Kg	1	0.005		03/15/01
X0177	XG.2001.314-19	100-41-4	Ethylbenzene	ND	mg / Kg	1	0.005		03/15/01
X0177	XG.2001.314-19	95-47-6	o-Xylene	ND	mg / Kg	1	0.005		03/15/01
X0177	XG.2001.314-19	108-38-3/106-42	p/m-Xylenes	ND	mg / Kg	1	0.01		03/15/01
X0177	XG.2001.314-19	108-88-3	Toluene	ND	mg / Kg	1	0.005		03/15/01

Client Sample ID ***ST 106 SB33 100'*** Sample Matrix ***SOIL*** Sample Collected ***03/12/01 16:50:00***

QC Group	Run Sequence	CAS #	Analyte	Result	Units	Dilution Factor	Detection Limit	Code	Run Date
0103199-02A		**SW846 5030A/8015A GRO by GC/FID**							
X0182	XG.2001.297-6		Gasoline Range Organics	ND	mg / Kg	1	0.25		03/14/01

Member:
American Council of
Independent Laboratories, Inc

REPRODUCTION OF THIS REPORT IN LESS THAN FULL REQUIRES THE WRITTEN CONSENT OF AAL.
THIS REPORT MAY NOT BE USED IN ANY MANNER BY THE CLIENT OR ANY OTHER THIRD PARTY TO CLAIM
PRODUCT ENDORSEMENT BY ANY ACCREDITATION PROGRAM.

Certificate of Analysis

Client: **CH2MHILL**

Project: **0103199** **160660.02.FF.SA**

RECEIVED APR 1 3 2001

0103199-02B **SW846 ME/8015A Diesel Range Organics by GC/FID**

X0183	XG.2001.298-3		Diesel Range Organics	ND	mg / Kg	1	25		03/14/01

0103199-02C **SW846 8260A Purgeable VOCs by GC/MS**

X0190	XG.2001.300-13	75-34-3	1,1 Dichloroethane	ND	mg / Kg	1	0.005		03/14/01
X0190	XG.2001.300-13	75-34-3	1,1 Dichloroethene	ND	mg / Kg	1	0.005		03/14/01
X0190	XG.2001.300-13	71-55-6	1,1,1 Trichloroethane	ND	mg / Kg	1	0.005		03/14/01
X0190	XG.2001.300-13	630-20-6	1,1,1,2 Tetrachloroethane	ND	mg / Kg	1	0.005		03/14/01
X0190	XG.2001.300-13	79-00-5	1,1,2 Trichloroethane	ND	mg / Kg	1	0.005		03/14/01
X0190	XG.2001.300-13	79-34-5	1,1,2,2 Tetrachloroethane	ND	mg / Kg	1	0.005		03/14/01
X0190	XG.2001.300-13	106-93-4	1,2 Dibromoethane (EDB)	ND	mg / Kg	1	0.005		03/14/01
X0190	XG.2001.300-13	95-50-1	1,2 Dichlorobenzene	ND	mg / Kg	1	0.005		03/14/01
X0190	XG.2001.300-13	107-06-2	1,2 Dichloroethane	ND	mg / Kg	1	0.005		03/14/01
X0190	XG.2001.300-13	78-87-5	1,2 Dichloropropane	ND	mg / Kg	1	0.005		03/14/01
X0190	XG.2001.300-13	96-18-4	1,2,3 Trichloropropane	ND	mg / Kg	1	0.005		03/14/01
X0190	XG.2001.300-13	95-63-6	1,2,4-Trimethylbenzene	ND	mg / Kg	1	0.005		03/14/01
X0190	XG.2001.300-13	541-73-1	1,3 Dichlorobenzene	ND	mg / Kg	1	0.005		03/14/01
X0190	XG.2001.300-13	108-67-8	1,3,5-Trimethylbenzene	ND	mg / Kg	1	0.005		03/14/01
X0190	XG.2001.300-13	764-41-0	1,4 Dichloro-2-butene	ND	mg / Kg	1	0.05		03/14/01
X0190	XG.2001.300-13	106-46-7	1,4 Dichlorobenzene	ND	mg / Kg	1	0.005		03/14/01
X0190	XG.2001.300-13	78-93-3	2-Butanone (MEK)	ND	mg / Kg	1	0.025		03/14/01
X0190	XG.2001.300-13	110-75-8	2-Chloroethylvinylether	ND	mg / Kg	1	0.025		03/14/0
X0190	XG.2001.300-13	591-78-6	2-Hexanone (MBK)	ND	mg / Kg	1	0.025		03/14
X0190	XG.2001.300-13	108-10-1	4-Methyl-2-pentanone (MIBK)	ND	mg / Kg	1	0.025		03/14/01
X0190	XG.2001.300-13	67-64-1	Acetone	0.11	mg / Kg	1	0.05		03/14/01
X0190	XG.2001.300-13	107-02-8	Acrolein	ND	mg / Kg	1	0.1		03/14/01
X0190	XG.2001.300-13	107-13-1	Acrylonitrile	ND	mg / Kg	1	0.1		03/14/01
X0190	XG.2001.300-13	71-43-2	Benzene	ND	mg / Kg	1	0.005		03/14/01
X0190	XG.2001.300-13	75-27-4	Bromodichloromethane	ND	mg / Kg	1	0.005		03/14/01
X0190	XG.2001.300-13	75-25-2	Bromoform	ND	mg / Kg	1	0.005		03/14/01
X0190	XG.2001.300-13	74-83-9	Bromomethane	ND	mg / Kg	1	0.025		03/14/01
X0190	XG.2001.300-13	75-15-0	Carbon disulfide	ND	mg / Kg	1	0.025		03/14/01
X0190	XG.2001.300-13	56-23-5	Carbon tetrachloride	ND	mg / Kg	1	0.005		03/14/01
X0190	XG.2001.300-13	108-90-7	Chlorobenzene	ND	mg / Kg	1	0.005		03/14/01
X0190	XG.2001.300-13	124-48-1	Chlorodibromomethane	ND	mg / Kg	1	0.005		03/14/01
X0190	XG.2001.300-13	75-00-3	Chloroethane	ND	mg / Kg	1	0.025		03/14/01
X0190	XG.2001.300-13	67-66-3	Chloroform	ND	mg / Kg	1	0.005		03/14/01
X0190	XG.2001.300-13	74-87-3	Chloromethane	ND	mg / Kg	1	0.025		03/14/01
X0190	XG.2001.300-13	156-59-2	cis-1,2 dichloroethene	ND	mg / Kg	1	0.005		03/14/01
X0190	XG.2001.300-13	10061-01-5	cis-1,3 dichloropropene	ND	mg / Kg	1	0.005		03/14/01
X0190	XG.2001.300-13	74-95-3	Dibromomethane	ND	mg / Kg	1	0.005		03/14/01
X0190	XG.2001.300-13	97-63-2	Ethyl methacrylate	ND	mg / Kg	1	0.025		03/14/01
X0190	XG.2001.300-13	100-41-4	Ethylbenzene	ND	mg / Kg	1	0.005		03/14/01
X0190	XG.2001.300-13		Freon 113	ND	mg / Kg	1	0.025		03/14/01
X0190	XG.2001.300-13	75-71-8	Freon 12	ND	mg / Kg	1	0.05		03/14/01
X0190	XG.2001.300-13	74-88-4	Iodomethane	ND	mg / Kg	1	0.025		03/14/01
X0190	XG.2001.300-13	1634-04-4	Methyl t-butyl ether (MTBE)	ND	mg / Kg	1	0.005		03/14/01
X0190	XG.2001.300-13	75-09-2	Methylene chloride	ND	mg / Kg	1	0.05		03/14

Certificate of Analysis

Client: **CH2MHILL**

Project: **0103199** **160660.02.FF.SA**

X0190	XG.2001.300-13	91-20-3	Naphthalene	ND	mg / Kg	1	0.025		03/14/01
X0190	XG.2001.300-13	95-47-6	o-Xylene	ND	mg / Kg	1	0.005		03/14/01
X0190	XG.2001.300-13	108-38-3/106-42	p/m Xylenes	ND	mg / Kg	1	0.01		03/14/01
X0190	XG.2001.300-13	100-42-5	Styrene	ND	mg / Kg	1	0.005		03/14/01
X0190	XG.2001.300-13	156-60-5	t-1,2 Dichloroethene	ND	mg / Kg	1	0.005		03/14/01
X0190	XG.2001.300-13	10061-02-6	t-1,3 Dichloropropene	ND	mg / Kg	1	0.005		03/14/01
X0190	XG.2001.300-13	127-18-4	Tetrachloroethene	ND	mg / Kg	1	0.005		03/14/01
X0190	XG.2001.300-13	108-88-3	Toluene	ND	mg / Kg	1	0.005		03/14/01
X0190	XG.2001.300-13	79-01-6	Trichloroethene	ND	mg / Kg	1	0.005		03/14/01
X0190	XG.2001.300-13	75-69-4	Trichlorofluoromethane	ND	mg / Kg	1	0.025		03/14/01
X0190	XG.2001.300-13	108-05-4	Vinyl acetate	ND	mg / Kg	1	0.025		03/14/01
X0190	XG.2001.300-13	75-01-4	Vinyl chloride	ND	mg / Kg	1	0.025		03/14/01

Client Sample ID ***ST 106 SB33 170'*** Sample Matrix ***SOIL*** Sample Collected ***03/13/01 13:30:00***

QC Group	Run Sequence	CAS #	Analyte	Result	Units	Dilution Factor	Detection Limit	Code	Run Date
0103199-03A		**SW846 5030A/8015A GRO by GC/FID**							
X0182	XG.2001.297-7		Gasoline Range Organics	ND	mg / Kg	1	0.25		03/14/01
0103199-03B		**SW846 ME/8015A Diesel Range Organics by GC/FID**							
X0183	XG.2001.298-4		Diesel Range Organics	ND	mg / Kg	1	25		03/14/01
0103199-03C		**SW846 8260A Purgeable VOCs by GC/MS**							
X0190	XG.2001.300-12	75-34-3	1,1 Dichloroethane	ND	mg / Kg	1	0.005		03/14/01
X0190	XG.2001.300-12	75-34-3	1,1 Dichloroethene	ND	mg / Kg	1	0.005		03/14/01
X0190	XG.2001.300-12	71-55-6	1,1,1 Trichloroethane	ND	mg / Kg	1	0.005		03/14/01
X0190	XG.2001.300-12	630-20-6	1,1,1,2 Tetrachloroethane	ND	mg / Kg	1	0.005		03/14/01
X0190	XG.2001.300-12	79-00-5	1,1,2 Trichloroethane	ND	mg / Kg	1	0.005		03/14/01
X0190	XG.2001.300-12	79-34-5	1,1,2,2 Tetrachloroethane	ND	mg / Kg	1	0.005		03/14/01
X0190	XG.2001.300-12	106-93-4	1,2 Dibromoethane (EDB)	ND	mg / Kg	1	0.005		03/14/01
X0190	XG.2001.300-12	95-50-1	1,2 Dichlorobenzene	ND	mg / Kg	1	0.005		03/14/01
X0190	XG.2001.300-12	107-06-2	1,2 Dichloroethane	ND	mg / Kg	1	0.005		03/14/01
X0190	XG.2001.300-12	78-87-5	1,2 Dichloropropane	ND	mg / Kg	1	0.005		03/14/01
X0190	XG.2001.300-12	96-18-4	1,2,3 Trichloropropane	ND	mg / Kg	1	0.005		03/14/01
X0190	XG.2001.300-17	95-63-6	1,2,4-Trimethylbenzene	ND	mg / Kg	1	0.005		03/14/01
X0190	XG.2001.300-12	541-73-1	1,3 Dichlorobenzene	ND	mg / Kg	1	0.005		03/14/01
X0190	XG.2001.300-12	108-67-8	1,3,5-Trimethylbenzene	ND	mg / Kg	1	0.005		03/14/01
X0190	XG.2001.300-12	764-41-0	1,4 Dichloro-2-butene	ND	mg / Kg	1	0.05		03/14/01
X0190	XG.2001.300-12	106-46-7	1,4 Dichlorobenzene	ND	mg / Kg	1	0.005		03/14/01
X0190	XG.2001.300-12	78-93-3	2-Butanone (MEK)	ND	mg / Kg	1	0.025		03/14/01
X0190	XG.2001.300-12	110-75-8	2-Chloroethylvinylether	ND	mg / Kg	1	0.025		03/14/01
X0190	XG.2001.300-12	591-78-6	2-Hexanone (MBK)	ND	mg / Kg	1	0.025		03/14/01
X0190	XG.2001.300-12	108-10-1	4-Methyl-2-pentanone (MIBK)	ND	mg / Kg	1	0.025		03/14/01
X0190	XG.2001.300-12	67-64-1	Acetone	ND	mg / Kg	1	0.05		03/14/01
X0190	XG.2001.300-12	107-02-8	Acrolein	ND	mg / Kg	1	0.1		03/14/01

Certificate of Analysis

Client: **CH2MHILL**

Project: **0103199** **160660.02.FF.SA**

X0190	XG.2001.300-12	107-13-1	Acrylonitrile	ND	mg / Kg	1	0.1		03/14/0
X0190	XG.2001.300-12	71-43-2	Benzene	ND	mg / Kg	1	0.005		03/14/0
X0190	XG.2001.300-12	75-27-4	Bromodichloromethane	ND	mg / Kg	1	0.005		03/14/0
X0190	XG.2001.300-12	75-25-2	Bromoform	ND	mg / Kg	1	0.005		03/14/0
X0190	XG.2001.300-12	74-83-9	Bromomethane	ND	mg / Kg	1	0.025		03/14/0
X0190	XG.2001.300-12	75-15-0	Carbon disulfide	ND	mg / Kg	1	0.025		03/14/0
X0190	XG.2001.300-12	56-23-5	Carbon tetrachloride	ND	mg / Kg	1	0.005		03/14/0
X0190	XG.2001.300-12	108-90-7	Chlorobenzene	ND	mg / Kg	1	0.005		03/14/0
X0190	XG.2001.300-12	124-48-1	Chlorodibromomethane	ND	mg / Kg	1	0.005		03/14/0
X0190	XG.2001.300-12	75-00-3	Chloroethane	ND	mg / Kg	1	0.025		03/14/0
X0190	XG.2001.300-12	67-66-3	Chloroform	ND	mg / Kg	1	0.005		03/14/0
X0190	XG.2001.300-12	74-87-3	Chloromethane	ND	mg / Kg	1	0.025		03/14/0
X0190	XG.2001.300-12	156-59-2	cis-1,2 dichloroethene	ND	mg / Kg	1	0.005		03/14/0
X0190	XG.2001.300-12	10061-01-5	cis-1,3 dichloropropene	ND	mg / Kg	1	0.005		03/14/0
X0190	XG.2001.300-12	74-95-3	Dibromomethane	ND	mg / Kg	1	0.005		03/14/0
X0190	XG.2001.300-12	97-63-2	Ethyl methacrylate	ND	mg / Kg	1	0.025		03/14/0
X0190	XG.2001.300-12	100-41-4	Ethylbenzene	ND	mg / Kg	1	0.005		03/14/0
X0190	XG.2001.300-12		Freon 113	ND	mg / Kg	1	0.025		03/14/0
X0190	XG.2001.300-12	75-71-8	Freon 12	ND	mg / Kg	1	0.05		03/14/0
X0190	XG.2001.300-12	74-88-4	Iodomethane	ND	mg / Kg	1	0.025		03/14/0
X0190	XG.2001.300-12	1634-04-4	Methyl t-butyl ether (MTBE)	ND	mg / Kg	1	0.005		03/14/0
X0190	XG.2001.300-12	75-09-2	Methylene chloride	ND	mg / Kg	1	0.05		03/14/0
X0190	XG.2001.300-12	91-20-3	Naphthalene	ND	mg / Kg	1	0.025		03/14
X0190	XG.2001.300-12	95-47-6	o-Xylene	ND	mg / Kg	1	0.005		03/14/
X0190	XG.2001.300-12	108-38-3/106-42	p/m Xylenes	ND	mg / Kg	1	0.01		03/14/0
X0190	XG.2001.300-12	100-42-5	Styrene	ND	mg / Kg	1	0.005		03/14/0
X0190	XG.2001.300-12	156-60-5	t-1,2 Dichloroethene	ND	mg / Kg	1	0.005		03/14/0
X0190	XG.2001.300-12	10061-02-6	t-1,3 Dichloropropene	ND	mg / Kg	1	0.005		03/14/0
X0190	XG.2001.300-12	127-18-4	Tetrachloroethene	ND	mg / Kg	1	0.005		03/14/0
X0190	XG.2001.300-17	108-88-3	Toluene	ND	mg / Kg	1	0.005		03/14/0
X0190	XG.2001.300-12	79-01-6	Trichloroethene	ND	mg / Kg	1	0.005		03/14/0
X0190	XG.2001.300-12	75-69-4	Trichlorofluoromethane	ND	mg / Kg	1	0.025		03/14/0
X0190	XG.2001.300-12	108-05-4	Vinyl acetate	ND	mg / Kg	1	0.025		03/14/0
X0190	XG.2001.300-12	75-01-4	Vinyl chloride	ND	mg / Kg	1	0.025		03/14/0

Client Sample ID ***ST 106 SB33 170' DUP*** Sample Matrix ***SOIL*** Sample Collected ***03/13/01 13:30:00***

QC Group	Run Sequence	CAS #	Analyte	Result	Units	Dilution Factor	Detection Limit	Code	Run Date
0103199-04A		**SW846 5030A/8015A GRO by GC/FID**							
X0182	XG.2001.297-8		Gasoline Range Organics	ND	mg / Kg	1	0.25		03/14/0
0103199-04B		**SW846 8260A Purgeable VOCs by GC/MS**							
X0190	XG.2001.300-14	75-34-3	1,1 Dichloroethane	ND	mg / Kg	1	0.005		03/14/0
X0190	XG.2001.300-14	75-34-3	1,1 Dichloroethene	ND	mg / Kg	1	0.005		03/14/0
X0190	XG.2001.300-14	71-55-6	1,1,1 Trichloroethane	ND	mg / Kg	1	0.005		03/14

Certificate of Analysis

Client: **CH2MHILL**

Project: **0103199** **160660.02.FF.SA**

X0190	XG.2001.300-14	630-20-6	1,1,1,2 Tetrachloroethane	ND	mg / Kg	1	0.005		03/14/01
X0190	XG.2001.300-14	79-00-5	1,1,2 Trichloroethane	ND	mg / Kg	1	0.005		03/14/01
X0190	XG.2001.300-14	79-34-5	1,1,2,2 Tetrachloroethane	ND	mg / Kg	1	0.005		03/14/01
X0190	XG.2001.300-14	106-93-4	1,2 Dibromoethane (EDB)	ND	mg / Kg	1	0.005		03/14/01
X0190	XG.2001.300-14	95-50-1	1,2 Dichlorobenzene	ND	mg / Kg	1	0.005		03/14/01
X0190	XG.2001.300-14	107-06-2	1,2 Dichloroethane	ND	mg / Kg	1	0.005		03/14/01
X0190	XG.2001.300-14	78-87-5	1,2 Dichloropropane	ND	mg / Kg	1	0.005		03/14/01
X0190	XG.2001.300-14	96-18-4	1,2,3 Trichloropropane	ND	mg / Kg	1	0.005		03/14/01
X0190	XG.2001.300-14	95-63-6	1,2,4-Trimethylbenzene	ND	mg / Kg	1	0.005		03/14/01
X0190	XG.2001.300-14	541-73-1	1,3 Dichlorobenzene	ND	mg / Kg	1	0.005		03/14/01
X0190	XG.2001.300-14	108-67-8	1,3,5-Trimethylbenzene	ND	mg / Kg	1	0.005		03/14/01
X0190	XG.2001.300-14	764-41-0	1,4 Dichloro-2-butene	ND	mg / Kg	1	0.05		03/14/01
X0190	XG.2001.300-14	106-46-7	1,4 Dichlorobenzene	ND	mg / Kg	1	0.005		03/14/01
X0190	XG.2001.300-14	78-93-3	2-Butanone (MEK)	ND	mg / Kg	1	0.025		03/14/01
X0190	XG.2001.300-14	110-75-8	2-Chloroethylvinylether	ND	mg / Kg	1	0.025		03/14/01
X0190	XG.2001.300-14	591-78-6	2-Hexanone (MBK)	ND	mg / Kg	1	0.025		03/14/01
X0190	XG.2001.300-14	108-10-1	4-Methyl-2-pentanone (MIBK)	ND	mg / Kg	1	0.025		03/14/01
X0190	XG.2001.300-14	67-64-1	Acetone	ND	mg / Kg	1	0.05		03/14/01
X0190	XG.2001.300-14	107-02-8	Acrolein	ND	mg / Kg	1	0.1		03/14/01
X0190	XG.2001.300-14	107-13-1	Acrylonitrile	ND	mg / Kg	1	0.1		03/14/01
X0190	XG.2001.300-14	71-43-2	Benzene	ND	mg / Kg	1	0.005		03/14/01
X0190	XG.2001.300-14	75-27-4	Bromodichloromethane	ND	mg / Kg	1	0.005		03/14/01
[illegible]	XG.2001.300-14	75-25-2	Bromoform	ND	mg / Kg	1	0.005		03/14/01
X0190	XG.2001.300-14	74-83-9	Bromomethane	ND	mg / Kg	1	0.025		03/14/01
X0190	XG.2001.300-14	75-15-0	Carbon disulfide	ND	mg / Kg	1	0.025		03/14/01
X0190	XG.2001.300-14	56-23-5	Carbon tetrachloride	ND	mg / Kg	1	0.005		03/14/01
X0190	XG.2001.300-14	108-90-7	Chlorobenzene	ND	mg / Kg	1	0.005		03/14/01
X0190	XG.2001.300-14	124-48-1	Chlorodibromomethane	ND	mg / Kg	1	0.005		03/14/01
X0190	XG.2001.300-14	75-00-3	Chloroethane	ND	mg / Kg	1	0.025		03/14/01
X0190	XG.2001.300-14	67-66-3	Chloroform	ND	mg / Kg	1	0.005		03/14/01
X0190	XG.2001.300-14	74-87-3	Chloromethane	ND	mg / Kg	1	0.025		03/14/01
X0190	XG.2001.300-14	156-59-2	cis-1,2 dichloroethene	ND	mg / Kg	1	0.005		03/14/01
X0190	XG.2001.300-14	10061-01-5	cis-1,3 dichloropropene	ND	mg / Kg	1	0.005		03/14/01
X0190	XG.2001.300-14	74-95-3	Dibromomethane	ND	mg / Kg	1	0.005		03/14/01
X0190	XG.2001.300-14	97-63-2	Ethyl methacrylate	ND	mg / Kg	1	0.025		03/14/01
X0190	XG.2001.300-14	100-41-4	Ethylbenzene	ND	mg / Kg	1	0.005		03/14/01
X0190	XG.2001.300-14		Freon 113	ND	mg / Kg	1	0.025		03/14/01
X0190	XG.2001.300-14	75-71-8	Freon 12	ND	mg / Kg	1	0.05		03/14/01
X0190	XG.2001.300-14	74-88-4	Iodomethane	ND	mg / Kg	1	0.025		03/14/01
X0190	XG.2001.300-14	1634-04-4	Methyl t-butyl ether (MTBE)	ND	mg / Kg	1	0.005		03/14/01
X0190	XG.2001.300-14	75-09-2	Methylene chloride	ND	mg / Kg	1	0.05		03/14/01
X0190	XG.2001.300-14	91-20-3	Naphthalene	ND	mg / Kg	1	0.025		03/14/01
X0190	XG.2001.300-14	95-47-6	o-Xylene	ND	mg / Kg	1	0.005		03/14/01
X0190	XG.2001.300-14	108-38-3/106-42	p/m Xylenes	ND	mg / Kg	1	0.01		03/14/01
X0190	XG.2001.300-14	100-42-5	Styrene	ND	mg / Kg	1	0.005		03/14/01
X0190	XG.2001.300-14	156-60-5	t-1,2 Dichloroethene	ND	mg / Kg	1	0.005		03/14/01
X0190	XG.2001.300-14	10061-02-6	t-1,3 Dichloropropene	ND	mg / Kg	1	0.005		03/14/01
	XG.2001.300-14	127-18-4	Tetrachloroethene	ND	mg / Kg	1	0.005		03/14/01

Certificate of Analysis

Client: **CH2MHILL**

Project: **0103199** **160660.02.FF.SA**

X0190	XG.2001.300-14	108-88-3	Toluene	ND	mg / Kg	1	0.005		03/14/01
X0190	XG.2001.300-14	79-01-6	Trichloroethene	ND	mg / Kg	1	0.005		03/14/01
X0190	XG.2001.300-14	75-69-4	Trichlorofluoromethane	ND	mg / Kg	1	0.025		03/14/01
X0190	XG.2001.300-14	108-05-4	Vinyl acetate	ND	mg / Kg	1	0.025		03/14/01
X0190	XG.2001.300-14	75-01-4	Vinyl chloride	ND	mg / Kg	1	0.025		03/14/01

**** Sample specific Detection Limit is determined by multiplying the sample Dilution Factor by the listed Reporting Detection Limit. ****

**** ND = Not detected: less than the sample specific Detection Limit. Results relate only to the items tested. ****

Assaigai Analytical Laboratories, Inc.

Quality Control Summary

C[illegible]t: **CH2MHILL**

P[illegible]ct: **0103199** **160660.02.FF.SA**

Explanation of codes	
D	*Not applicable due to sample dilution*
L	*Not applicable due to MDL proximity*

QC Type **LCS: Lab Control Spike** QC Matrix **SOLID**

QC Group	Run Sequence	CAS #	Analyte	Result	Units	Dilution Factor	Detection Limit	Code	Run Date
X0177-004		**SW846 5030A/8021B Purgeable VOCs by GC/PID**							
X0177	XG.2001.263-3	71-43-2	Benzene	94	% Recovery	1	NA		03/05/01
X0177	XG.2001.263-3	100-41-4	Ethylbenzene	93	% Recovery	1	NA		03/05/01
X0177	XG.2001.263-3	95-47-6	o-Xylene	94	% Recovery	1	NA		03/05/01
X0177	XG.2001.263-3	108-38-3/106-42	p/m-Xylenes	95	% Recovery	1	NA		03/05/01
X0177	XG.2001.263-3	108-88-3	Toluene	92	% Recovery	1	NA		03/05/01
X0182-002		**SW846 5030A/8015A GRO by GC/FID**							
X0182	XG.2001.271-2		Gasoline Range Organics	114	% Recovery	1	NA		03/07/01
X0183-002		**SW846 ME/8015A Diesel Range Organics by GC/FID**							
X0183	XG.2001.276-2		Diesel Range Organics	90	% Recovery	1	NA		03/08/01
X0190-007		**SW846 8260A Purgeable VOCs by GC/MS**							
X0190	XG.2001.300-7	75-34-3	1,1 Dichloroethene	113	% Recovery	1	NA		03/13/01
X0190	XG.2001.300-7	106-46-7	1,4 Dichlorobenzene	103	% Recovery	1	NA		03/13/01
X0190	XG.2001.300-7	71-43-2	Benzene	111	% Recovery	1	NA		03/13/01
X0190	XG.2001.300-7	108-90-7	Chlorobenzene	108	% Recovery	1	NA		03/13/01
	XG.2001.300-7	108-88-3	Toluene	112	% Recovery	1	NA		03/13/01
X0190	XG.2001.300-7	79-01-6	Trichloroethene	110	% Recovery	1	NA		03/13/01

QC Type **LCSD: Lab Control Spike Duplicate Accuracy** QC Matrix **SOLID**

QC Group	Run Sequence	CAS #	Analyte	Result	Units	Dilution Factor	Detection Limit	Code	Run Date
X0177-003		**SW846 5030A/8021B Purgeable VOCs by GC/PID**							
X0177	XG.2001.263-2	71-43-2	Benzene	96	% Recovery	1	NA		03/05/01
X0177	XG.2001.263-2	100-41-4	Ethylbenzene	95	% Recovery	1	NA		03/05/01
X0177	XG.2001.263-2	95-47-6	o-Xylene	95	% Recovery	1	NA		03/05/01
X0177	XG.2001.263-2	108-38-3/106-42	p/m-Xylenes	97	% Recovery	1	NA		03/05/01
X0177	XG.2001.263-2	108-88-3	Toluene	94	% Recovery	1	NA		03/05/01
X0182-003		**SW846 5030A/8015A GRO by GC/FID**							
X0182	XG.2001.271-3		Gasoline Range Organics	104	% Recovery	1	NA		03/07/01
X0183-003		**SW846 ME/8015A Diesel Range Organics by GC/FID**							
X0183	XG.2001.276-3		Diesel Range Organics	86	% Recovery	1	NA		03/08/01
X0190-008		**SW846 8260A Purgeable VOCs by GC/MS**							
X0190	XG.2001.300-8	75-34-3	1,1 Dichloroethene	118	% Recovery	1	NA		03/13/01
X0190	XG.2001.300-8	106-46-7	1,4 Dichlorobenzene	105	% Recovery	1	NA		03/13/01
X0190	XG.2001.300-8	71-43-2	Benzene	115	% Recovery	1	NA		03/13/01
X0190	XG.2001.300-8	108-90-7	Chlorobenzene	111	% Recovery	1	NA		03/13/01
	XG.2001.300-8	108-88-3	Toluene	114	% Recovery	1	NA		03/13/01

Quality Control Summary

Client: **CH2MHILL**

Project: **0103199** **160660.02.FF.SA**

Explanation of codes	
D	*Not applicable due to sample dilut*
L	*Not applicable due to MDL proximit*

X0190	XG.2001.300-8	79-01-6	Trichloroethene	113	% Recovery	1	NA		03/13/0

QC Type **LCSD: Lab Control Spike Duplicate Precision** QC Matrix **SOLID**

QC Group	Run Sequence	CAS #	Analyte	Result	Units	Dilution Factor	Detection Limit	Code	Run Date
X0177-003		**SW846 5030A/8021B Purgeable VOCs by GC/PID**							
X0177	XG.2001.263-2	71-43-2	Benzene	2	RPD	1	NA		03/05/0
X0177	XG.2001.263-2	100-41-4	Ethylbenzene	2	RPD	1	NA		03/05/0
X0177	XG.2001.263-2	95-47-6	o-Xylene	2	RPD	1	NA		03/05/0
X0177	XG.2001.263-2	108-38-3/106-42	p/m-Xylenes	2	RPD	1	NA		03/05/0
X0177	XG.2001.263-2	108-88-3	Toluene	2	RPD	1	NA		03/05/0
X0182-003		**SW846 5030A/8015A GRO by GC/FID**							
X0182	XG.2001.271-3		Gasoline Range Organics	9	RPD	1	NA		03/07/0
X0183-003		**SW846 ME/8015A Diesel Range Organics by GC/FID**							
X0183	XG.2001.276-3		Diesel Range Organics	5	RPD	1	NA		03/08/0
X0190-008		**SW846 8260A Purgeable VOCs by GC/MS**							
X0190	XG.2001.300-8	75-34-3	1,1 Dichloroethene	4	RPD	1	NA		03/13/0
X0190	XG.2001.300-8	106-46-7	1,4 Dichlorobenzene	2	RPD	1	NA		03/13/0
X0190	XG.2001.300-8	71-43-2	Benzene	3	RPD	1	NA		03/13
X0190	XG.2001.300-8	108-90-7	Chlorobenzene	3	RPD	1	NA		03/13
X0190	XG.2001.300-8	108-88-3	Toluene	2	RPD	1	NA		03/13/0
X0190	XG.2001.300-8	79-01-6	Trichloroethene	3	RPD	1	NA		03/13/0

QC Type **MB: Method Blank** QC Matrix **SOLID**

QC Group	Run Sequence	CAS #	Analyte	Result	Units	Dilution Factor	Detection Limit	Code	Run Date
X0177-001		**SW846 5030A/8021B Purgeable VOCs by GC/PID**							
X0177	XG.2001.263-1	71-43-2	Benzene	ND	mg / Kg	1	0.005		03/05/01
X0177	XG.2001.263-1	100-41-4	Ethylbenzene	ND	mg / Kg	1	0.005		03/05/01
X0177	XG.2001.263-1	95-47-6	o-Xylene	ND	mg / Kg	1	0.005		03/05/01
X0177	XG.2001.263-1	108-38-3/106-42	p/m-Xylenes	ND	mg / Kg	1	0.01		03/05/01
X0177	XG.2001.263-1	108-88-3	Toluene	ND	mg / Kg	1	0.005		03/05/01
X0177-012		**SW846 5030A/8021B Purgeable VOCs by GC/PID**							
X0177	XG.2001.314-18	71-43-2	Benzene	ND	mg / Kg	1	0.005		03/15/01
X0177	XG.2001.314-18	100-41-4	Ethylbenzene	ND	mg / Kg	1	0.005		03/15/01
X0177	XG.2001.314-18	95-47-6	o-Xylene	ND	mg / Kg	1	0.005		03/15/01
X0177	XG.2001.314-18	108-38-3/106-42	p/m-Xylenes	ND	mg / Kg	1	0.01		03/15/01
X0177	XG.2001.314-18	108-88-3	Toluene	ND	mg / Kg	1	0.005		03/15/01
X0177-014		**SW846 5030A/8021B Purgeable VOCs by GC/PID**							
X0177	XG.2001.335-1	71-43-2	Benzene	ND	mg / Kg	1	0.005		03/19
X0177	XG.2001.335-1	100-41-4	Ethylbenzene	ND	mg / Kg	1	0.005		03/19

Quality Control Summary

Explanation of codes	
D	*Not applicable due to sample dilution*
L	*Not applicable due to MDL proximity*

Client: CH2MHILL

Project: 0103199 160660.02.FF.SA

X0177	XG.2001.335-1	95-47-6	o-Xylene	ND	mg / Kg	1	0.005		03/19/01
X0177	XG.2001.335-1	108-38-3/106-42	p/m-Xylenes	ND	mg / Kg	1	0.01		03/19/01
X0177	XG.2001.335-1	108-88-3	Toluene	ND	mg / Kg	1	0.005		03/19/01
X0177-020		**SW846 5030A/8021B Purgeable VOCs by GC/PID**							
X0177	XG.2001.335-3	71-43-2	Benzene	ND	mg / Kg	1	0.005		03/20/01
X0177	XG.2001.335-3	100-41-4	Ethylbenzene	ND	mg / Kg	1	0.005		03/20/01
X0177	XG.2001.335-3	95-47-6	o-Xylene	ND	mg / Kg	1	0.005		03/20/01
X0177	XG.2001.335-3	108-38-3/106-42	p/m-Xylenes	ND	mg / Kg	1	0.01		03/20/01
X0177	XG.2001.335-3	108-88-3	Toluene	ND	mg / Kg	1	0.005		03/20/01
X0177-023		**SW846 5030A/8021B Purgeable VOCs by GC/PID**							
X0177	XG.2001.375-1	71-43-2	Benzene	ND	mg / Kg	1	0.005		03/29/01
X0177	XG.2001.375-1	100-41-4	Ethylbenzene	ND	mg / Kg	1	0.005		03/29/01
X0177	XG.2001.375-1	95-47-6	o-Xylene	ND	mg / Kg	1	0.005		03/29/01
X0177	XG.2001.375-1	108-38-3/106-42	p/m-Xylenes	ND	mg / Kg	1	0.01		03/29/01
X0177	XG.2001.375-1	108-88-3	Toluene	ND	mg / Kg	1	0.005		03/29/01
X0177-035		**SW846 5030A/8021B Purgeable VOCs by GC/PID**							
X0177	XG.2001.386-2	71-43-2	Benzene	ND	mg / Kg	1	0.005		03/30/01
X0177	XG.2001.386-2	100-41-4	Ethylbenzene	ND	mg / Kg	1	0.005		03/30/01
X0177	XG.2001.386-2	95-47-6	o-Xylene	ND	mg / Kg	1	0.005		03/30/01
X0177	XG.2001.386-2	108-38-3/106-42	p/m-Xylenes	ND	mg / Kg	1	0.01		03/30/01
[illegible]	XG.2001.386-2	108-88-3	Toluene	ND	mg / Kg	1	0.005		03/30/01
X0182-001		**SW846 5030A/8015A GRO by GC/FID**							
X0182	XG.2001.271-1		Gasoline Range Organics	ND	mg / Kg	1	0.25		03/07/01
X0182-012		**SW846 5030A/8015A GRO by GC/FID**							
X0182	XG.2001.294-1		Gasoline Range Organics	ND	mg / Kg	1	0.25		03/08/01
X0182-023		**SW846 5030A/8015A GRO by GC/FID**							
X0182	XG.2001.294-10		Gasoline Range Organics	ND	mg / Kg	1	0.25		03/12/01
X0182-026		**SW846 5030A/8015A GRO by GC/FID**							
X0182	XG.2001.297-1		Gasoline Range Organics	ND	mg / Kg	1	0.25		03/13/01
X0182-029		**SW846 5030A/8015A GRO by GC/FID**							
X0182	XG.2001.297-4		Gasoline Range Organics	ND	mg / Kg	1	0.25		03/14/01
X0183-001		**SW846 ME/8015A Diesel Range Organics by GC/FID**							
X0183	XG.2001.276-1		Diesel Range Organics	ND	mg / Kg	1	25		03/08/01
X0183-023		**SW846 ME/8015A Diesel Range Organics by GC/FID**							
X0183	XG.2001.298-1		Diesel Range Organics	ND	mg / Kg	1	25		03/14/01
X0190-001		**SW846 8260A Purgeable VOCs by GC/MS**							
X0190	XG.2001.300-1	75-34-3	1,1 Dichloroethane	ND	mg / Kg	1	0.005		03/13/01
X0190	XG.2001.300-1	75-34-3	1,1 Dichloroethene	ND	mg / Kg	1	0.005		03/13/01
X0190	XG.2001.300-1	71-55-6	1,1,1 Trichloroethane	ND	mg / Kg	1	0.005		03/13/01
X0190	XG.2001.300-1	630-20-6	1,1,1,2 Tetrachloroethane	ND	mg / Kg	1	0.005		03/13/01
X0190	XG.2001.300-1	79-00-5	1,1,2 Trichloroethane	ND	mg / Kg	1	0.005		03/13/01
[illegible]	XG.2001.300-1	79-34-5	1,1,2,2 Tetrachloroethane	ND	mg / Kg	1	0.005		03/13/01
[illegible]	XG.2001.300-1	106-93-4	1,2 Dibromoethane (EDB)	ND	mg / Kg	1	0.005		03/13/01

Quality Control Summary

Explanation of codes	
D	*Not applicable due to sample dilut*
L	*Not applicable due to MDL proxim*

Client: **CH2MHILL**

Project: **0103199** **160660.02.FF.SA**

X0190	XG.2001.300-1	95-50-1	1,2 Dichlorobenzene	ND	mg / Kg	1	0.005		03/13/01
X0190	XG.2001.300-1	107-06-2	1,2 Dichloroethane	ND	mg / Kg	1	0.005		03/13/01
X0190	XG.2001.300-1	78-87-5	1,2 Dichloropropane	ND	mg / Kg	1	0.005		03/13/01
X0190	XG.2001.300-1	96-18-4	1,2,3 Trichloropropane	ND	mg / Kg	1	0.005		03/13/01
X0190	XG.2001.300-1	95-63-6	1,2,4-Trimethylbenzene	ND	mg / Kg	1	0.005		03/13/01
X0190	XG.2001.300-1	541-73-1	1,3 Dichlorobenzene	ND	mg / Kg	1	0.005		03/13/01
X0190	XG.2001.300-1	108-67-8	1,3,5-Trimethylbenzene	ND	mg / Kg	1	0.005		03/13/01
X0190	XG.2001.300-1	764-41-0	1,4 Dichloro-2-butene	ND	mg / Kg	1	0.05		03/13/01
X0190	XG.2001.300-1	106-46-7	1,4 Dichlorobenzene	ND	mg / Kg	1	0.005		03/13/01
X0190	XG.2001.300-1	78-93-3	2-Butanone (MEK)	ND	mg / Kg	1	0.025		03/13/01
X0190	XG.2001.300-1	110-75-8	2-Chloroethylvinylether	ND	mg / Kg	1	0.025		03/13/01
X0190	XG.2001.300-1	591-78-6	2-Hexanone (MBK)	ND	mg / Kg	1	0.025		03/13/01
X0190	XG.2001.300-1	108-10-1	4-Methyl-2-pentanone (MIBK)	ND	mg / Kg	1	0.025		03/13/01
X0190	XG.2001.300-1	67-64-1	Acetone	ND	mg / Kg	1	0.05		03/13/01
X0190	XG.2001.300-1	107-02-8	Acrolein	ND	mg / Kg	1	0.1		03/13/01
X0190	XG.2001.300-1	107-13-1	Acrylonitrile	ND	mg / Kg	1	0.1		03/13/01
X0190	XG.2001.300-1	71-43-2	Benzene	ND	mg / Kg	1	0.005		03/13/01
X0190	XG.2001.300-1	75-27-4	Bromodichloromethane	ND	mg / Kg	1	0.005		03/13/01
X0190	XG.2001.300-1	75-25-2	Bromoform	ND	mg / Kg	1	0.005		03/13/01
X0190	XG.2001.300-1	74-83-9	Bromomethane	ND	mg / Kg	1	0.025		03/13/01
X0190	XG.2001.300-1	75-15-0	Carbon disulfide	ND	mg / Kg	1	0.025		03/13/01
X0190	XG.2001.300-1	56-23-5	Carbon tetrachloride	ND	mg / Kg	1	0.005		03/13/01
X0190	XG.2001.300-1	108-90-7	Chlorobenzene	ND	mg / Kg	1	0.005		03/13/01
X0190	XG.2001.300-1	124-48-1	Chlorodibromomethane	ND	mg / Kg	1	0.005		03/13
X0190	XG.2001.300-1	75-00-3	Chloroethane	ND	mg / Kg	1	0.025		03/1
X0190	XG.2001.300-1	67-66-3	Chloroform	ND	mg / Kg	1	0.005		03/13/01
X0190	XG.2001.300-1	74-87-3	Chloromethane	ND	mg / Kg	1	0.025		03/13/01
X0190	XG.2001.300-1	156-59-2	cis-1,2 dichloroethene	ND	mg / Kg	1	0.005		03/13/01
X0190	XG.2001.300-1	10061-01-5	cis-1,3 dichloropropene	ND	mg / Kg	1	0.005		03/13/01
X0190	XG.2001.300-1	74-95-3	Dibromomethane	ND	mg / Kg	1	0.005		03/13/01
X0190	XG.2001.300-1	97-63-2	Ethyl methacrylate	ND	mg / Kg	1	0.025		03/13/01
X0190	XG.2001.300-1	100-41-4	Ethylbenzene	ND	mg / Kg	1	0.005		03/13/01
X0190	XG.2001.300-1		Freon 113	ND	mg / Kg	1	0.025		03/13/01
X0190	XG.2001.300-1	75-71-8	Freon 12	ND	mg / Kg	1	0.05		03/13/01
X0190	XG.2001.300-1	74-88-4	Iodomethane	ND	mg / Kg	1	0.025		03/13/01
X0190	XG.2001.300-1	1634-04-4	Methyl t-butyl ether (MTBE)	ND	mg / Kg	1	0.005		03/13/01
X0190	XG.2001.300-1	75-09-2	Methylene chloride	ND	mg / Kg	1	0.05		03/13/01
X0190	XG.2001.300-1	91-20-3	Naphthalene	ND	mg / Kg	1	0.025		03/13/01
X0190	XG.2001.300-1	95-47-6	o-Xylene	ND	mg / Kg	1	0.005		03/13/01
X0190	XG.2001.300-1	108-38-3/106-42	p/m Xylenes	ND	mg / Kg	1	0.01		03/13/01
X0190	XG.2001.300-1	100-42-5	Styrene	ND	mg / Kg	1	0.005		03/13/01
X0190	XG.2001.300-1	156-60-5	t-1,2 Dichloroethene	ND	mg / Kg	1	0.005		03/13/01
X0190	XG.2001.300-1	10061-02-6	t-1,3 Dichloropropene	ND	mg / Kg	1	0.005		03/13/01
X0190	XG.2001.300-1	127-18-4	Tetrachloroethene	ND	mg / Kg	1	0.005		03/13/01
X0190	XG.2001.300-1	108-88-3	Toluene	ND	mg / Kg	1	0.005		03/13/01
X0190	XG.2001.300-1	79-01-6	Trichloroethene	ND	mg / Kg	1	0.005		03/13/01
X0190	XG.2001.300-1	75-69-4	Trichlorofluoromethane	ND	mg / Kg	1	0.025		03/13/01
X0190	XG.2001.300-1	108-05-4	Vinyl acetate	ND	mg / Kg	1	0.025		03/13/01
X0190	XG.2001.300-1	75-01-4	Vinyl chloride	ND	mg / Kg	1	0.025		03/13/

Quality Control Summary

Explanation of codes	
D	*Not applicable due to sample dilution*
L	*Not applicable due to MDL proximity*

t: **CH2MHILL**

Project: **0103199** **160660.02.FF.SA**

X0190-014 **SW846 8260A Purgeable VOCs by GC/MS**

X0190	XG.2001.300-11	75-34-3	1,1 Dichloroethane	ND	mg / Kg	1	0.005		03/14/01
X0190	XG.2001.300-11	75-34-3	1,1 Dichloroethene	ND	mg / Kg	1	0.005		03/14/01
X0190	XG.2001.300-11	71-55-6	1,1,1 Trichloroethane	ND	mg / Kg	1	0.005		03/14/01
X0190	XG.2001.300-11	630-20-6	1,1,1,2 Tetrachloroethane	ND	mg / Kg	1	0.005		03/14/01
X0190	XG.2001.300-11	79-00-5	1,1,2 Trichloroethane	ND	mg / Kg	1	0.005		03/14/01
X0190	XG.2001.300-11	79-34-5	1,1,2,2 Tetrachloroethane	ND	mg / Kg	1	0.005		03/14/01
X0190	XG.2001.300-11	106-93-4	1,2 Dibromoethane (EDB)	ND	mg / Kg	1	0.005		03/14/01
X0190	XG.2001.300-11	95-50-1	1,2 Dichlorobenzene	ND	mg / Kg	1	0.005		03/14/01
X0190	XG.2001.300-11	107-06-2	1,2 Dichloroethane	ND	mg / Kg	1	0.005		03/14/01
X0190	XG.2001.300-11	78-87-5	1,2 Dichloropropane	ND	mg / Kg	1	0.005		03/14/01
X0190	XG.2001.300-11	96-18-4	1,2,3 Trichloropropane	ND	mg / Kg	1	0.005		03/14/01
X0190	XG.2001.300-11	95-63-6	1,2,4-Trimethylbenzene	ND	mg / Kg	1	0.005		03/14/01
X0190	XG.2001.300-11	541-73-1	1,3 Dichlorobenzene	ND	mg / Kg	1	0.005		03/14/01
X0190	XG.2001.300-11	108-67-8	1,3,5-Trimethylbenzene	ND	mg / Kg	1	0.005		03/14/01
X0190	XG.2001.300-11	764-41-0	1,4 Dichloro-2-butene	ND	mg / Kg	1	0.05		03/14/01
X0190	XG.2001.300-11	106-46-7	1,4 Dichlorobenzene	ND	mg / Kg	1	0.005		03/14/01
X0190	XG.2001.300-11	78-93-3	2-Butanone (MEK)	ND	mg / Kg	1	0.025		03/14/01
X0190	XG.2001.300-11	110-75-8	2-Chloroethylvinylether	ND	mg / Kg	1	0.025		03/14/01
X0190	XG.2001.300-11	591-78-6	2-Hexanone (MBK)	ND	mg / Kg	1	0.025		03/14/01
X0190	XG.2001.300-11	108-10-1	4-Methyl-2-pentanone (MIBK)	ND	mg / Kg	1	0.025		03/14/01
X0190	XG.2001.300-11	67-64-1	Acetone	ND	mg / Kg	1	0.05		03/14/01
[illegible]	XG.2001.300-11	107-02-8	Acrolein	ND	mg / Kg	1	0.1		03/14/01
[illegible]	XG.2001.300-11	107-13-1	Acrylonitrile	ND	mg / Kg	1	0.1		03/14/01
X0190	XG.2001.300-11	71-43-2	Benzene	ND	mg / Kg	1	0.005		03/14/01
X0190	XG.2001.300-11	75-27-4	Bromodichloromethane	ND	mg / Kg	1	0.005		03/14/01
X0190	XG.2001.300-11	75-25-2	Bromoform	ND	mg / Kg	1	0.005		03/14/01
X0190	XG.2001.300-11	74-83-9	Bromomethane	ND	mg / Kg	1	0.025		03/14/01
X0190	XG.2001.300-11	75-15-0	Carbon disulfide	ND	mg / Kg	1	0.025		03/14/01
X0190	XG.2001.300-11	56-23-5	Carbon tetrachloride	ND	mg / Kg	1	0.005		03/14/01
X0190	XG.2001.300-11	108-90-7	Chlorobenzene	ND	mg / Kg	1	0.005		03/14/01
X0190	XG.2001.300-11	124-48-1	Chlorodibromomethane	ND	mg / Kg	1	0.005		03/14/01
X0190	XG.2001.300-11	75-00-3	Chloroethane	ND	mg / Kg	1	0.025		03/14/01
X0190	XG.2001.300-11	67-66-3	Chloroform	ND	mg / Kg	1	0.005		03/14/01
X0190	XG.2001.300-11	74-87-3	Chloromethane	ND	mg / Kg	1	0.025		03/14/01
X0190	XG.2001.300-11	156-59-2	cis-1,2 dichloroethene	ND	mg / Kg	1	0.005		03/14/01
X0190	XG.2001.300-11	10061-01-5	cis-1,3 dichloropropene	ND	mg / Kg	1	0.005		03/14/01
X0190	XG.2001.300-11	74-95-3	Dibromomethane	ND	mg / Kg	1	0.005		03/14/01
X0190	XG.2001.300-11	97-63-2	Ethyl methacrylate	ND	mg / Kg	1	0.025		03/14/01
X0190	XG.2001.300-11	100-41-4	Ethylbenzene	ND	mg / Kg	1	0.005		03/14/01
X0190	XG.2001.300-11		Freon 113	ND	mg / Kg	1	0.025		03/14/01
X0190	XG.2001.300-11	75-71-8	Freon 12	ND	mg / Kg	1	0.05		03/14/01
X0190	XG.2001.300-11	74-88-4	Iodomethane	ND	mg / Kg	1	0.025		03/14/01
X0190	XG.2001.300-11	1634-04-4	Methyl t-butyl ether (MTBE)	ND	mg / Kg	1	0.005		03/14/01
X0190	XG.2001.300-11	75-09-2	Methylene chloride	ND	mg / Kg	1	0.05		03/14/01
X0190	XG.2001.300-11	91-20-3	Naphthalene	ND	mg / Kg	1	0.025		03/14/01
X0190	XG.2001.300-11	95-47-6	o-Xylene	ND	mg / Kg	1	0.005		03/14/01
X0190	XG.2001.300-11	108-38-3/106-42	p/m Xylenes	ND	mg / Kg	1	0.01		03/14/01
[illegible]	XG.2001.300-11	100-42-5	Styrene	ND	mg / Kg	1	0.005		03/14/01

Quality Control Summary

Client: **CH2MHILL**

Project: **0103199** **160660.02.FF.SA**

Explanation of codes

D	*Not applicable due to sample diluti*
L	*Not applicable due to MDL proximi*

X0190	XG.2001.300-11	156-60-5	t-1,2 Dichloroethene	ND	mg / Kg	1	0.005		03/14/01
X0190	XG.2001.300-11	10061-02-6	t-1,3 Dichloropropene	ND	mg / Kg	1	0.005		03/14/01
X0190	XG.2001.300-11	127-18-4	Tetrachloroethene	ND	mg / Kg	1	0.005		03/14/01
X0190	XG.2001.300-11	108-88-3	Toluene	ND	mg / Kg	1	0.005		03/14/01
X0190	XG.2001.300-11	79-01-6	Trichloroethene	ND	mg / Kg	1	0.005		03/14/01
X0190	XG.2001.300-11	75-69-4	Trichlorofluoromethane	ND	mg / Kg	1	0.025		03/14/01
X0190	XG.2001.300-11	108-05-4	Vinyl acetate	ND	mg / Kg	1	0.025		03/14/01
X0190	XG.2001.300-11	75-01-4	Vinyl chloride	ND	mg / Kg	1	0.025		03/14/01

X0190-021 **SW846 8260A Purgeable VOCs by GC/MS**

X0190	XG.2001.330-1	75-34-3	1,1 Dichloroethane	ND	mg / Kg	1	0.005		03/20/01
X0190	XG.2001.330-1	75-34-3	1,1 Dichloroethene	ND	mg / Kg	1	0.005		03/20/01
X0190	XG.2001.330-1	71-55-6	1,1,1 Trichloroethane	ND	mg / Kg	1	0.005		03/20/01
X0190	XG.2001.330-1	630-20-6	1,1,1,2 Tetrachloroethane	ND	mg / Kg	1	0.005		03/20/01
X0190	XG.2001.330-1	79-00-5	1,1,2 Trichloroethane	ND	mg / Kg	1	0.005		03/20/01
X0190	XG.2001.330-1	79-34-5	1,1,2,2 Tetrachloroethane	ND	mg / Kg	1	0.005		03/20/01
X0190	XG.2001.330-1	106-93-4	1,2 Dibromoethane (EDB)	ND	mg / Kg	1	0.005		03/20/01
X0190	XG.2001.330-1	95-50-1	1,2 Dichlorobenzene	ND	mg / Kg	1	0.005		03/20/01
X0190	XG.2001.330-1	107-06-2	1,2 Dichloroethane	ND	mg / Kg	1	0.005		03/20/01
X0190	XG.2001.330-1	78-87-5	1,2 Dichloropropane	ND	mg / Kg	1	0.005		03/20/01
X0190	XG.2001.330-1	96-18-4	1,2,3 Trichloropropane	ND	mg / Kg	1	0.005		03/20/01
X0190	XG.2001.330-1	95-63-6	1,2,4-Trimethylbenzene	ND	mg / Kg	1	0.005		03/20/01
X0190	XG.2001.330-1	541-73-1	1,3 Dichlorobenzene	ND	mg / Kg	1	0.005		03/20/01
X0190	XG.2001.330-1	108-67-8	1,3,5-Trimethylbenzene	ND	mg / Kg	1	0.005		03/20/01
X0190	XG.2001.330-1	764-41-0	1,4 Dichloro-2-butene	ND	mg / Kg	1	0.05		03/20
X0190	XG.2001.330-1	106-46-7	1,4 Dichlorobenzene	ND	mg / Kg	1	0.005		03/20/01
X0190	XG.2001.330-1	78-93-3	2-Butanone (MEK)	ND	mg / Kg	1	0.025		03/20/01
X0190	XG.2001.330-1	110-75-8	2-Chloroethylvinylether	ND	mg / Kg	1	0.025		03/20/01
X0190	XG.2001.330-1	591-78-6	2-Hexanone (MBK)	ND	mg / Kg	1	0.025		03/20/01
X0190	XG.2001.330-1	108-10-1	4-Methyl-2-pentanone (MIBK)	ND	mg / Kg	1	0.025		03/20/01
X0190	XG.2001.330-1	67-64-1	Acetone	ND	mg / Kg	1	0.05		03/20/01
X0190	XG.2001.330-1	107-02-8	Acrolein	ND	mg / Kg	1	0.1		03/20/01
X0190	XG.2001.330-1	107-13-1	Acrylonitrile	ND	mg / Kg	1	0.1		03/20/01
X0190	XG.2001.330-1	71-43-2	Benzene	ND	mg / Kg	1	0.005		03/20/01
X0190	XG.2001.330-1	75-27-4	Bromodichloromethane	ND	mg / Kg	1	0.005		03/20/01
X0190	XG.2001.330-1	75-25-2	Bromoform	ND	mg / Kg	1	0.005		03/20/01
X0190	XG.2001.330-1	74-83-9	Bromomethane	ND	mg / Kg	1	0.025		03/20/01
X0190	XG.2001.330-1	75-15-0	Carbon disulfide	ND	mg / Kg	1	0.025		03/20/01
X0190	XG.2001.330-1	56-23-5	Carbon tetrachloride	ND	mg / Kg	1	0.005		03/20/01
X0190	XG.2001.330-1	108-90-7	Chlorobenzene	ND	mg / Kg	1	0.005		03/20/01
X0190	XG.2001.330-1	124-48-1	Chlorodibromomethane	ND	mg / Kg	1	0.005		03/20/01
X0190	XG.2001.330-1	75-00-3	Chloroethane	ND	mg / Kg	1	0.025		03/20/01
X0190	XG.2001.330-1	67-66-3	Chloroform	ND	mg / Kg	1	0.005		03/20/01
X0190	XG.2001.330-1	74-87-3	Chloromethane	ND	mg / Kg	1	0.025		03/20/01
X0190	XG.2001.330-1	156-59-2	cis-1,2 dichloroethene	ND	mg / Kg	1	0.005		03/20/01
X0190	XG.2001.330-1	10061-01-5	cis-1,3 dichloropropene	ND	mg / Kg	1	0.005		03/20/01
X0190	XG.2001.330-1	74-95-3	Dibromomethane	ND	mg / Kg	1	0.005		03/20/01
X0190	XG.2001.330-1	97-63-2	Ethyl methacrylate	ND	mg / Kg	1	0.025		03/20/01
X0190	XG.2001.330-1	100-41-4	Ethylbenzene	ND	mg / Kg	1	0.005		03/20/01
X0190	XG.2001.330-1		Freon 113	ND	mg / Kg	1	0.025		03/20/0
X0190	XG.2001.330-1	75-71-8	Freon 12	ND	mg / Kg	1	0.05		03/20

Quality Control Summary

Client: CH2MHILL

Project: 0103199 160660.02.FF.SA

Explanation of codes	
D	*Not applicable due to sample dilution*
L	*Not applicable due to MDL proximity*

X0190	XG.2001.330-1	74-88-4	Iodomethane	ND	mg / Kg	1	0.025		03/20/01
X0190	XG.2001.330-1	1634-04-4	Methyl t-butyl ether (MTBE)	ND	mg / Kg	1	0.005		03/20/01
X0190	XG.2001.330-1	75-09-2	Methylene chloride	ND	mg / Kg	1	0.05		03/20/01
X0190	XG.2001.330-1	91-20-3	Naphthalene	ND	mg / Kg	1	0.025		03/20/01
X0190	XG.2001.330-1	95-47-6	o-Xylene	ND	mg / Kg	1	0.005		03/20/01
X0190	XG.2001.330-1	108-38-3/106-42	p/m Xylenes	ND	mg / Kg	1	0.01		03/20/01
X0190	XG.2001.330-1	100-42-5	Styrene	ND	mg / Kg	1	0.005		03/20/01
X0190	XG.2001.330-1	156-60-5	t-1,2 Dichloroethene	ND	mg / Kg	1	0.005		03/20/01
X0190	XG.2001.330-1	10061-02-6	t-1,3 Dichloropropene	ND	mg / Kg	1	0.005		03/20/01
X0190	XG.2001.330-1	127-18-4	Tetrachloroethene	ND	mg / Kg	1	0.005		03/20/01
X0190	XG.2001.330-1	108-88-3	Toluene	ND	mg / Kg	1	0.005		03/20/01
X0190	XG.2001.330-1	79-01-6	Trichloroethene	ND	mg / Kg	1	0.005		03/20/01
X0190	XG.2001.330-1	75-69-4	Trichlorofluoromethane	ND	mg / Kg	1	0.025		03/20/01
X0190	XG.2001.330-1	108-05-4	Vinyl acetate	ND	mg / Kg	1	0.025		03/20/01
X0190	XG.2001.330-1	75-01-4	Vinyl chloride	ND	mg / Kg	1	0.025		03/20/01

X0190-025 **SW846 8260A Purgeable VOCs by GC/MS**

X0190	XG.2001.339-1	75-34-3	1,1 Dichloroethane	ND	mg / Kg	1	0.005		03/21/01
X0190	XG.2001.339-1	75-34-3	1,1 Dichloroethene	ND	mg / Kg	1	0.005		03/21/01
X0190	XG.2001.339-1	71-55-6	1,1,1 Trichloroethane	ND	mg / Kg	1	0.005		03/21/01
X0190	XG.2001.339-1	630-20-6	1,1,1,2 Tetrachloroethane	ND	mg / Kg	1	0.005		03/21/01
X0190	XG.2001.339-1	79-00-5	1,1,2 Trichloroethane	ND	mg / Kg	1	0.005		03/21/01
X0190	XG.2001.339-1	79-34-5	1,1,2,2 Tetrachloroethane	ND	mg / Kg	1	0.005		03/21/01
[illegible]	XG.2001.339-1	106-93-4	1,2 Dibromoethane (EDB)	ND	mg / Kg	1	0.005		03/21/01
[illegible]	XG.2001.339-1	95-50-1	1,2 Dichlorobenzene	ND	mg / Kg	1	0.005		03/21/01
X0190	XG.2001.339-1	107-06-2	1,2 Dichloroethane	ND	mg / Kg	1	0.005		03/21/01
X0190	XG.2001.339-1	78-87-5	1,2 Dichloropropane	ND	mg / Kg	1	0.005		03/21/01
X0190	XG.2001.339-1	96-18-4	1,2,3 Trichloropropane	ND	mg / Kg	1	0.005		03/21/01
X0190	XG.2001.339-1	95-63-6	1,2,4-Trimethylbenzene	ND	mg / Kg	1	0.005		03/21/01
X0190	XG.2001.339-1	541-73-1	1,3 Dichlorobenzene	ND	mg / Kg	1	0.005		03/21/01
X0190	XG.2001.339-1	108-67-8	1,3,5-Trimethylbenzene	ND	mg / Kg	1	0.005		03/21/01
X0190	XG.2001.339-1	764-41-0	1,4 Dichloro-2-butene	ND	mg / Kg	1	0.05		03/21/01
X0190	XG.2001.339-1	106-46-7	1,4 Dichlorobenzene	ND	mg / Kg	1	0.005		03/21/01
X0190	XG.2001.339-1	78-93-3	2-Butanone (MEK)	ND	mg / Kg	1	0.025		03/21/01
X0190	XG.2001.339-1	110-75-8	2-Chloroethylvinylether	ND	mg / Kg	1	0.025		03/21/01
X0190	XG.2001.339-1	591-78-6	2-Hexanone (MBK)	ND	mg / Kg	1	0.025		03/21/01
X0190	XG.2001.339-1	108-10-1	4-Methyl-2-pentanone (MIBK)	ND	mg / Kg	1	0.025		03/21/01
X0190	XG.2001.339-1	67-64-1	Acetone	ND	mg / Kg	1	0.05		03/21/01
X0190	XG.2001.339-1	107-02-8	Acrolein	ND	mg / Kg	1	0.1		03/21/01
X0190	XG.2001.339-1	107-13-1	Acrylonitrile	ND	mg / Kg	1	0.1		03/21/01
X0190	XG.2001.339-1	71-43-2	Benzene	ND	mg / Kg	1	0.005		03/21/01
X0190	XG.2001.339-1	75-27-4	Bromodichloromethane	ND	mg / Kg	1	0.005		03/21/01
X0190	XG.2001.339-1	75-25-2	Bromoform	ND	mg / Kg	1	0.005		03/21/01
X0190	XG.2001.339-1	74-83-9	Bromomethane	ND	mg / Kg	1	0.025		03/21/01
X0190	XG.2001.339-1	75-15-0	Carbon disulfide	ND	mg / Kg	1	0.025		03/21/01
X0190	XG.2001.339-1	56-23-5	Carbon tetrachloride	ND	mg / Kg	1	0.005		03/21/01
X0190	XG.2001.339-1	108-90-7	Chlorobenzene	ND	mg / Kg	1	0.005		03/21/01
X0190	XG.2001.339-1	124-48-1	Chlorodibromomethane	ND	mg / Kg	1	0.005		03/21/01
X0190	XG.2001.339-1	75-00-3	Chloroethane	ND	mg / Kg	1	0.025		03/21/01
[illegible]	XG.2001.339-1	67-66-3	Chloroform	ND	mg / Kg	1	0.005		03/21/01

Quality Control Summary

Client: **CH2MHILL**

Project: **0103199** **160660.02.FF.SA**

Explanation of codes	
D	*Not applicable due to sample dilut*
L	*Not applicable due to MDL proxim*

X0190	XG.2001.339-1	74-87-3	Chloromethane	ND	mg / Kg	1	0.025		03/21/0
X0190	XG.2001.339-1	156-59-2	cis-1,2 dichloroethene	ND	mg / Kg	1	0.005		03/21/0
X0190	XG.2001.339-1	10061-01-5	cis-1,3 dichloropropene	ND	mg / Kg	1	0.005		03/21/0
X0190	XG.2001.339-1	74-95-3	Dibromomethane	ND	mg / Kg	1	0.005		03/21/0
X0190	XG.2001.339-1	97-63-2	Ethyl methacrylate	ND	mg / Kg	1	0.025		03/21/0
X0190	XG.2001.339-1	100-41-4	Ethylbenzene	ND	mg / Kg	1	0.005		03/21/0
X0190	XG.2001.339-1		Freon 113	ND	mg / Kg	1	0.025		03/21/0
X0190	XG.2001.339-1	75-71-8	Freon 12	ND	mg / Kg	1	0.05		03/21/0
X0190	XG.2001.339-1	74-88-4	Iodomethane	ND	mg / Kg	1	0.025		03/21/0
X0190	XG.2001.339-1	1634-04-4	Methyl t-butyl ether (MTBE)	ND	mg / Kg	1	0.005		03/21/0
X0190	XG.2001.339-1	75-09-2	Methylene chloride	ND	mg / Kg	1	0.05		03/21/0
X0190	XG.2001.339-1	91-20-3	Naphthalene	ND	mg / Kg	1	0.025		03/21/0
X0190	XG.2001.339-1	95-47-6	o-Xylene	ND	mg / Kg	1	0.005		03/21/0
X0190	XG.2001.339-1	108-38-3/106-42	p/m Xylenes	ND	mg / Kg	1	0.01		03/21/0
X0190	XG.2001.339-1	100-42-5	Styrene	ND	mg / Kg	1	0.005		03/21/01
X0190	XG.2001.339-1	156-60-5	t-1,2 Dichloroethene	ND	mg / Kg	1	0.005		03/21/01
X0190	XG.2001.339-1	10061-02-6	t-1,3 Dichloropropene	ND	mg / Kg	1	0.005		03/21/01
X0190	XG.2001.339-1	127-18-4	Tetrachloroethene	ND	mg / Kg	1	0.005		03/21/01
X0190	XG.2001.339-1	108-88-3	Toluene	ND	mg / Kg	1	0.005		03/21/01
X0190	XG.2001.339-1	79-01-6	Trichloroethene	ND	mg / Kg	1	0.005		03/21/01
X0190	XG.2001.339-1	75-69-4	Trichlorofluoromethane	ND	mg / Kg	1	0.025		03/21/01
X0190	XG.2001.339-1	108-05-4	Vinyl acetate	ND	mg / Kg	1	0.025		03/21/01
X0190	XG.2001.339-1	75-01-4	Vinyl chloride	ND	mg / Kg	1	0.025		03/21/0
X0190-032		**SW846 8260A Purgeable VOCs by GC/MS**							
X0190	XG.2001.367-1	75-34-3	1,1 Dichloroethane	ND	mg / Kg	1	0.005		03/27/01
X0190	XG.2001.367-1	75-34-3	1,1 Dichloroethene	ND	mg / Kg	1	0.005		03/27/01
X0190	XG.2001.367-1	71-55-6	1,1,1 Trichloroethane	ND	mg / Kg	1	0.005		03/27/01
X0190	XG.2001.367-1	630-20-6	1,1,1,2 Tetrachloroethane	ND	mg / Kg	1	0.005		03/27/01
X0190	XG.2001.367-1	79-00-5	1,1,2 Trichloroethane	ND	mg / Kg	1	0.005		03/27/01
X0190	XG.2001.367-1	79-34-5	1,1,2,2 Tetrachloroethane	ND	mg / Kg	1	0.005		03/27/01
X0190	XG.2001.367-1	106-93-4	1,2 Dibromoethane (EDB)	ND	mg / Kg	1	0.005		03/27/01
X0190	XG.2001.367-1	95-50-1	1,2 Dichlorobenzene	ND	mg / Kg	1	0.005		03/27/01
X0190	XG.2001.367-1	107-06-2	1,2 Dichloroethane	ND	mg / Kg	1	0.005		03/27/01
X0190	XG.2001.367-1	78-87-5	1,2 Dichloropropane	ND	mg / Kg	1	0.005		03/27/01
X0190	XG.2001.367-1	96-18-4	1,2,3 Trichloropropane	ND	mg / Kg	1	0.005		03/27/01
X0190	XG.2001.367-1	95-63-6	1,2,4-Trimethylbenzene	ND	mg / Kg	1	0.005		03/27/01
X0190	XG.2001.367-1	541-73-1	1,3 Dichlorobenzene	ND	mg / Kg	1	0.005		03/27/01
X0190	XG.2001.367-1	108-67-8	1,3,5-Trimethylbenzene	ND	mg / Kg	1	0.005		03/27/01
X0190	XG.2001.367-1	764-41-0	1,4 Dichloro-2-butene	ND	mg / Kg	1	0.05		03/27/01
X0190	XG.2001.367-1	106-46-7	1,4 Dichlorobenzene	ND	mg / Kg	1	0.005		03/27/01
X0190	XG.2001.367-1	78-93-3	2-Butanone (MEK)	ND	mg / Kg	1	0.025		03/27/01
X0190	XG.2001.367-1	110-75-8	2-Chloroethylvinylether	ND	mg / Kg	1	0.025		03/27/01
X0190	XG.2001.367-1	591-78-6	2-Hexanone (MBK)	ND	mg / Kg	1	0.025		03/27/01
X0190	XG.2001.367-1	108-10-1	4-Methyl-2-pentanone (MIBK)	ND	mg / Kg	1	0.025		03/27/01
X0190	XG.2001.367-1	67-64-1	Acetone	ND	mg / Kg	1	0.05		03/27/01
X0190	XG.2001.367-1	107-02-8	Acrolein	ND	mg / Kg	1	0.1		03/27/01
X0190	XG.2001.367-1	107-13-1	Acrylonitrile	ND	mg / Kg	1	0.1		03/27/01
X0190	XG.2001.367-1	71-43-2	Benzene	ND	mg / Kg	1	0.005		03/27/01
X0190	XG.2001.367-1	75-27-4	Bromodichloromethane	ND	mg / Kg	1	0.005		03/27

Quality Control Summary

Explanation of codes

D	*Not applicable due to sample dilution*
L	*Not applicable due to MDL proximity*

Client: CH2MHILL

Project: 0103199 160660.02.FF.SA

X0190	XG.2001.367-1	75-25-2	Bromoform	ND	mg / Kg	1	0.005		03/27/01
X0190	XG.2001.367-1	74-83-9	Bromomethane	ND	mg / Kg	1	0.025		03/27/01
X0190	XG.2001.367-1	75-15-0	Carbon disulfide	ND	mg / Kg	1	0.025		03/27/01
X0190	XG.2001.367-1	56-23-5	Carbon tetrachloride	ND	mg / Kg	1	0.005		03/27/01
X0190	XG.2001.367-1	108-90-7	Chlorobenzene	ND	mg / Kg	1	0.005		03/27/01
X0190	XG.2001.367-1	124-48-1	Chlorodibromomethane	ND	mg / Kg	1	0.005		03/27/01
X0190	XG.2001.367-1	75-00-3	Chloroethane	ND	mg / Kg	1	0.025		03/27/01
X0190	XG.2001.367-1	67-66-3	Chloroform	ND	mg / Kg	1	0.005		03/27/01
X0190	XG.2001.367-1	74-87-3	Chloromethane	ND	mg / Kg	1	0.025		03/27/01
X0190	XG.2001.367-1	156-59-2	cis-1,2 dichloroethene	ND	mg / Kg	1	0.005		03/27/01
X0190	XG.2001.367-1	10061-01-5	cis-1,3 dichloropropene	ND	mg / Kg	1	0.005		03/27/01
X0190	XG.2001.367-1	74-95-3	Dibromomethane	ND	mg / Kg	1	0.005		03/27/01
X0190	XG.2001.367-1	97-63-2	Ethyl methacrylate	ND	mg / Kg	1	0.025		03/27/01
X0190	XG.2001.367-1	100-41-4	Ethylbenzene	ND	mg / Kg	1	0.005		03/27/01
X0190	XG.2001.367-1		Freon 113	ND	mg / Kg	1	0.025		03/27/01
X0190	XG.2001.367-1	75-71-8	Freon 12	ND	mg / Kg	1	0.05		03/27/01
X0190	XG.2001.367-1	74-88-4	Iodomethane	ND	mg / Kg	1	0.025		03/27/01
X0190	XG.2001.367-1	1634-04-4	Methyl t-butyl ether (MTBE)	ND	mg / Kg	1	0.005		03/27/01
X0190	XG.2001.367-1	75-09-2	Methylene chloride	ND	mg / Kg	1	0.05		03/27/01
X0190	XG.2001.367-1	91-20-3	Naphthalene	ND	mg / Kg	1	0.025		03/27/01
X0190	XG.2001.367-1	95-47-6	o-Xylene	ND	mg / Kg	1	0.005		03/27/01
X0190	XG.2001.367-1	108-38-3/106-42	p/m Xylenes	ND	mg / Kg	1	0.01		03/27/01
	XG.2001.367-1	100-42-5	Styrene	ND	mg / Kg	1	0.005		03/27/01
	XG.2001.367-1	156-60-5	t-1,2 Dichloroethene	ND	mg / Kg	1	0.005		03/27/01
X0190	XG.2001.367-1	10061-02-6	t-1,3 Dichloropropene	ND	mg / Kg	1	0.005		03/27/01
X0190	XG.2001.367-1	127-18-4	Tetrachloroethene	ND	mg / Kg	1	0.005		03/27/01
X0190	XG.2001.367-1	108-88-3	Toluene	ND	mg / Kg	1	0.005		03/27/01
X0190	XG.2001.367-1	79-01-6	Trichloroethene	ND	mg / Kg	1	0.005		03/27/01
X0190	XG.2001.367-1	75-69-4	Trichlorofluoromethane	ND	mg / Kg	1	0.025		03/27/01
X0190	XG.2001.367-1	108-05-4	Vinyl acetate	ND	mg / Kg	1	0.025		03/27/01
X0190	XG.2001.367-1	75-01-4	Vinyl chloride	ND	mg / Kg	1	0.025		03/27/01
X0190-039		**SW846 8260A Purgeable VOCs by GC/MS**							
X0190	XG.2001.367-7	75-34-3	1,1 Dichloroethane	ND	mg / Kg	1	0.005		03/28/01
X0190	XG.2001.367-7	75-34-3	1,1 Dichloroethene	ND	mg / Kg	1	0.005		03/28/01
X0190	XG.2001.367-7	71-55-6	1,1,1 Trichloroethane	ND	mg / Kg	1	0.005		03/28/01
X0190	XG.2001.367-7	630-20-6	1,1,1,2 Tetrachloroethane	ND	mg / Kg	1	0.005		03/28/01
X0190	XG.2001.367-7	79-00-5	1,1,2 Trichloroethane	ND	mg / Kg	1	0.005		03/28/01
X0190	XG.2001.367-7	79-34-5	1,1,2,2 Tetrachloroethane	ND	mg / Kg	1	0.005		03/28/01
X0190	XG.2001.367-7	106-93-4	1,2 Dibromoethane (EDB)	ND	mg / Kg	1	0.005		03/28/01
X0190	XG.2001.367-7	95-50-1	1,2 Dichlorobenzene	ND	mg / Kg	1	0.005		03/28/01
X0190	XG.2001.367-7	107-06-2	1,2 Dichloroethane	ND	mg / Kg	1	0.005		03/28/01
X0190	XG.2001.367-7	78-87-5	1,2 Dichloropropane	ND	mg / Kg	1	0.005		03/28/01
X0190	XG.2001.367-7	96-18-4	1,2,3 Trichloropropane	ND	mg / Kg	1	0.005		03/28/01
X0190	XG.2001.367-7	95-63-6	1,2,4-Trimethylbenzene	ND	mg / Kg	1	0.005		03/28/01
X0190	XG.2001.367-7	541-73-1	1,3 Dichlorobenzene	ND	mg / Kg	1	0.005		03/28/01
X0190	XG.2001.367-7	108-67-8	1,3,5-Trimethylbenzene	ND	mg / Kg	1	0.005		03/28/01
X0190	XG.2001.367-7	764-41-0	1,4 Dichloro-2-butene	ND	mg / Kg	1	0.05		03/28/01
	XG.2001.367-7	106-46-7	1,4 Dichlorobenzene	ND	mg / Kg	1	0.005		03/28/01
	XG.2001.367-7	78-93-3	2-Butanone (MEK)	ND	mg / Kg	1	0.025		03/28/01

Quality Control Summary

Client: **CH2MHILL**

Project: **0103199** **160660.02.FF.SA**

Explanation of codes	
D	*Not applicable due to sample diluti*
L	*Not applicable due to MDL proximi*

X0190	XG.2001.367-7	110-75-8	2-Chloroethylvinylether	ND	mg / Kg	1	0.025		03/28/01
X0190	XG.2001.367-7	591-78-6	2-Hexanone (MBK)	ND	mg / Kg	1	0.025		03/28/01
X0190	XG.2001.367-7	108-10-1	4-Methyl-2-pentanone (MIBK)	ND	mg / Kg	1	0.025		03/28/01
X0190	XG.2001.367-7	67-64-1	Acetone	ND	mg / Kg	1	0.05		03/28/01
X0190	XG.2001.367-7	107-02-8	Acrolein	ND	mg / Kg	1	0.1		03/28/01
X0190	XG.2001.367-7	107-13-1	Acrylonitrile	ND	mg / Kg	1	0.1		03/28/01
X0190	XG.2001.367-7	71-43-2	Benzene	ND	mg / Kg	1	0.005		03/28/01
X0190	XG.2001.367-7	75-27-4	Bromodichloromethane	ND	mg / Kg	1	0.005		03/28/01
X0190	XG.2001.367-7	75-25-2	Bromoform	ND	mg / Kg	1	0.005		03/28/01
X0190	XG.2001.367-7	74-83-9	Bromomethane	ND	mg / Kg	1	0.025		03/28/01
X0190	XG.2001.367-7	75-15-0	Carbon disulfide	ND	mg / Kg	1	0.025		03/28/01
X0190	XG.2001.367-7	56-23-5	Carbon tetrachloride	ND	mg / Kg	1	0.005		03/28/01
X0190	XG.2001.367-7	108-90-7	Chlorobenzene	ND	mg / Kg	1	0.005		03/28/01
X0190	XG.2001.367-7	124-48-1	Chlorodibromomethane	ND	mg / Kg	1	0.005		03/28/01
X0190	XG.2001.367-7	75-00-3	Chloroethane	ND	mg / Kg	1	0.025		03/28/01
X0190	XG.2001.367-7	67-66-3	Chloroform	ND	mg / Kg	1	0.005		03/28/01
X0190	XG.2001.367-7	74-87-3	Chloromethane	ND	mg / Kg	1	0.025		03/28/01
X0190	XG.2001.367-7	156-59-2	cis-1,2 dichloroethene	ND	mg / Kg	1	0.005		03/28/01
X0190	XG.2001.367-7	10061-01-5	cis-1,3 dichloropropene	ND	mg / Kg	1	0.005		03/28/01
X0190	XG.2001.367-7	74-95-3	Dibromomethane	ND	mg / Kg	1	0.005		03/28/01
X0190	XG.2001.367-7	97-63-2	Ethyl methacrylate	ND	mg / Kg	1	0.025		03/28/01
X0190	XG.2001.367-7	100-41-4	Ethylbenzene	ND	mg / Kg	1	0.005		03/28/01
X0190	XG.2001.367-7		Freon 113	ND	mg / Kg	1	0.025		03/28/01
X0190	XG.2001.367-7	75-71-8	Freon 12	ND	mg / Kg	1	0.05		03/28/
X0190	XG.2001.367-7	74-88-4	Iodomethane	ND	mg / Kg	1	0.025		03/28/
X0190	XG.2001.367-7	1634-04-4	Methyl t-butyl ether (MTBE)	ND	mg / Kg	1	0.005		03/28/01
X0190	XG.2001.367-7	75-09-2	Methylene chloride	ND	mg / Kg	1	0.05		03/28/01
X0190	XG.2001.367-7	91-20-3	Naphthalene	ND	mg / Kg	1	0.025		03/28/01
X0190	XG.2001.367-7	95-47-6	o-Xylene	ND	mg / Kg	1	0.005		03/28/0
X0190	XG.2001.367-7	108-38-3/106-42	p/m Xylenes	ND	mg / Kg	1	0.01		03/28/0
X0190	XG.2001.367-7	100-42-5	Styrene	ND	mg / Kg	1	0.005		03/28/0
X0190	XG.2001.367-7	156-60-5	t-1,2 Dichloroethene	ND	mg / Kg	1	0.005		03/28/0
X0190	XG.2001.367-7	10061-02-6	t-1,3 Dichloropropene	ND	mg / Kg	1	0.005		03/28/0
X0190	XG.2001.367-7	127-18-4	Tetrachloroethene	ND	mg / Kg	1	0.005		03/28/0
X0190	XG.2001.367-7	108-88-3	Toluene	ND	mg / Kg	1	0.005		03/28/0
X0190	XG.2001.367-7	79-01-6	Trichloroethene	ND	mg / Kg	1	0.005		03/28/0
X0190	XG.2001.367-7	75-69-4	Trichlorofluoromethane	ND	mg / Kg	1	0.025		03/28/0
X0190	XG.2001.367-7	108-05-4	Vinyl acetate	ND	mg / Kg	1	0.025		03/28/0
X0190	XG.2001.367-7	75-01-4	Vinyl chloride	ND	mg / Kg	1	0.025		03/28/0

QC Type **MS: Matrix Spike** QC Matrix **SOLID**

QC Group	Run Sequence	CAS #	Analyte	Result	Units	Dilution Factor	Detection Limit	Code	Run Date
X0177-010		SW846 5030A/8021B Purgeable VOCs by GC/PID							
X0177	XG.2001.263-9	71-43-2	Benzene	101	% Recovery	1	NA		03/05/01
X0177	XG.2001.263-9	100-41-4	Ethylbenzene	99	% Recovery	1	NA		03/05/01
X0177	XG.2001.263-9	95-47-6	o-Xylene	99	% Recovery	1	NA		03/05

Quality Control Summary

Client: CH2MHILL

Project: 0103199 160660.02.FF.SA

Explanation of codes	
D	*Not applicable due to sample dilution*
L	*Not applicable due to MDL proximity*

X0177	XG.2001.263-9	108-38-3/106-42	p/m-Xylenes	101	% Recovery	1	NA		03/05/01
X0177	XG.2001.263-9	108-88-3	Toluene	99	% Recovery	1	NA		03/05/01
X0182-006		**SW846 5030A/8015A GRO by GC/FID**							
X0182	XG.2001.271-6		Gasoline Range Organics	94	% Recovery	1	NA		03/08/01
X0183-012		**SW846 ME/8015A Diesel Range Organics by GC/FID**							
X0183	XG.2001.276-11		Diesel Range Organics	87	% Recovery	1	NA		03/08/01
X0190-005		**SW846 8260A Purgeable VOCs by GC/MS**							
X0190	XG.2001.300-5	75-34-3	1,1 Dichloroethene	118	% Recovery	1	NA		03/13/01
X0190	XG.2001.300-5	106-46-7	1,4 Dichlorobenzene	102	% Recovery	1	NA		03/13/01
X0190	XG.2001.300-5	71-43-2	Benzene	112	% Recovery	1	NA		03/13/01
X0190	XG.2001.300-5	108-90-7	Chlorobenzene	107	% Recovery	1	NA		03/13/01
X0190	XG.2001.300-5	108-88-3	Toluene	111	% Recovery	1	NA		03/13/01
X0190	XG.2001.300-5	79-01-6	Trichloroethene	111	% Recovery	1	NA		03/13/01

QC Type **MSD: Matrix Spike Duplicate Accuracy** QC Matrix **SOLID**

QC Group	Run Sequence	CAS #	Analyte	Result	Units	Dilution Factor	Detection Limit	Code	Run Date
X0177-011		**SW846 5030A/8021B Purgeable VOCs by GC/PID**							
	XG.2001.263-10	71-43-2	Benzene	98	% Recovery	1	NA		03/05/01
X0177	XG.2001.263-10	100-41-4	Ethylbenzene	96	% Recovery	1	NA		03/05/01
X0177	XG.2001.263-10	95-47-6	o-Xylene	98	% Recovery	1	NA		03/05/01
X0177	XG.2001.263-10	108-38-3/106-42	p/m-Xylenes	98	% Recovery	1	NA		03/05/01
X0177	XG.2001.263-10	108-88-3	Toluene	96	% Recovery	1	NA		03/05/01
X0182-007		**SW846 5030A/8015A GRO by GC/FID**							
X0182	XG.2001.271-7		Gasoline Range Organics	106	% Recovery	1	NA		03/08/01
X0183-006		**SW846 ME/8015A Diesel Range Organics by GC/FID**							
X0183	XG.2001.276-5		Diesel Range Organics	92	% Recovery	1	NA		03/08/01
X0190-006		**SW846 8260A Purgeable VOCs by GC/MS**							
X0190	XG.2001.300-6	75-34-3	1,1 Dichloroethene	120	% Recovery	1	NA		03/13/01
X0190	XG.2001.300-6	106-46-7	1,4 Dichlorobenzene	105	% Recovery	1	NA		03/13/01
X0190	XG.2001.300-6	71-43-2	Benzene	114	% Recovery	1	NA		03/13/01
X0190	XG.2001.300-6	108-90-7	Chlorobenzene	112	% Recovery	1	NA		03/13/01
X0190	XG.2001.300-6	108-88-3	Toluene	114	% Recovery	1	NA		03/13/01
X0190	XG.2001.300-6	79-01-6	Trichloroethene	112	% Recovery	1	NA		03/13/01

QC Type **MSD: Matrix Spike Duplicate Precision** QC Matrix **SOLID**

QC Group	Run Sequence	CAS #	Analyte	Result	Units	Dilution Factor	Detection Limit	Code	Run Date
X0177-011		**SW846 5030A/8021B Purgeable VOCs by GC/PID**							
	XG.2001.263-10	71-43-2	Benzene	3	RPD	1	NA		03/05/01
X0177	XG.2001.263-10	100-41-4	Ethylbenzene	2	RPD	1	NA		03/05/01

Quality Control Summary

Client: **CH2MHILL**

Project: **0103199** **160660.02.FF.SA**

Explanation of codes	
D	*Not applicable due to sample dilut*
L	*Not applicable due to MDL proxim*

X0177	XG.2001.263-10	95-47-6	o-Xylene	2	RPD	1	NA		03/05/01
X0177	XG.2001.263-10	108-38-3/106-42	p/m-Xylenes	2	RPD	1	NA		03/05/01
X0177	XG.2001.263-10	108-88-3	Toluene	2	RPD	1	NA		03/05/01
X0182-007		**SW846 5030A/8015A GRO by GC/FID**							
X0182	XG.2001.271-7		Gasoline Range Organics	11	RPD	1	NA		03/08/01
X0183-006		**SW846 ME/8015A Diesel Range Organics by GC/FID**							
X0183	XG.2001.276-5		Diesel Range Organics	5	RPD	1	NA		03/08/01
X0190-006		**SW846 8260A Purgeable VOCs by GC/MS**							
X0190	XG.2001.300-6	75-34-3	1,1 Dichloroethene	2	RPD	1	NA		03/13/01
X0190	XG.2001.300-6	106-46-7	1,4 Dichlorobenzene	3	RPD	1	NA		03/13/01
X0190	XG.2001.300-6	71-43-2	Benzene	2	RPD	1	NA		03/13/01
X0190	XG.2001.300-6	108-90-7	Chlorobenzene	4	RPD	1	NA		03/13/01
X0190	XG.2001.300-6	108-88-3	Toluene	2	RPD	1	NA		03/13/01
X0190	XG.2001.300-6	79-01-6	Trichloroethene	1	RPD	1	NA		03/13/01

Assaigai Analytical Laboratories, Inc.

Surrogate Summary: QC

t: **CH2MHILL**

Project: **0103199** **160660.02.FF.SA**

QC Type **LCS** QC Matrix **SOLID**

QC Group	Run Sequence	CAS #	Analyte	Result	Units	Dilution Factor	Detection Limit	Code	Run Date
X0177-004		**BTEXALL**							
X0177	XG.2001.263-3	NA	4-Bromofluorobenzene	99	% Recovery	1	NA		03/05/01
X0177	XG.2001.263-3	NA	aaa-Trifluorotoluene	99	% Recovery	1	NA		03/05/01
X0182-002		**GRO**							
X0182	XG.2001.271-2	NA	4-Bromofluorobenzene-FID	105	% Recovery	1	NA		03/07/01
X0182	XG.2001.271-2	NA	4-Bromofluorobenzene-PID	4490	% Recovery	1	NA		03/07/01
X0182	XG.2001.271-2	NA	aaa-Trifluorotoluene-FID	105	% Recovery	1	NA		03/07/01
X0182	XG.2001.271-2	NA	aaa-Trifluorotoluene-PID	2160	% Recovery	1	NA		03/07/01
X0183-002		**DRO**							
X0183	XG.2001.276-2	NA	O-terphenyl	105	% Recovery	1	NA		03/08/01
X0190-007		**8260**							
X0190	XG.2001.300-7	NA	1,2 Dichloroethane-D4 (SS)	93	% Recovery	1	NA		03/13/01
X0190	XG.2001.300-7	NA	4-Bromofluorobenzene (SS)	102	% Recovery	1	NA		03/13/01
X0190	XG.2001.300-7	NA	Dibromofluoromethane (SS)	97	% Recovery	1	NA		03/13/01
X0190	XG.2001.300-7	NA	Toluene-D8 (SS)	102	% Recovery	1	NA		03/13/01

QC Type **LCSD** QC Matrix **SOLID**

QC Group	Run Sequence	CAS #	Analyte	Result	Units	Dilution Factor	Detection Limit	Code	Run Date
X0177-003		**BTEXALL**							
X0177	XG.2001.263-2	NA	4-Bromofluorobenzene	100	% Recovery	1	NA		03/05/01
X0177	XG.2001.263-2	NA	aaa-Trifluorotoluene	98	% Recovery	1	NA		03/05/01
X0182-003		**GRO**							
X0182	XG.2001.271-3	NA	4-Bromofluorobenzene-FID	103	% Recovery	1	NA		03/07/01
X0182	XG.2001.271-3	NA	4-Bromofluorobenzene-PID	504	% Recovery	1	NA		03/07/01
X0182	XG.2001.271-3	NA	aaa-Trifluorotoluene-FID	105	% Recovery	1	NA		03/07/01
X0182	XG.2001.271-3	NA	aaa-Trifluorotoluene-PID	827	% Recovery	1	NA		03/07/01
X0183-003		**DRO**							
X0183	XG.2001.276-3	NA	O-terphenyl	102	% Recovery	1	NA		03/08/01
X0190-008		**8260**							
X0190	XG.2001.300-8	NA	1,2 Dichloroethane-D4 (SS)	90	% Recovery	1	NA		03/13/01
X0190	XG.2001.300-8	NA	4-Bromofluorobenzene (SS)	99	% Recovery	1	NA		03/13/01
X0190	XG.2001.300-8	NA	Dibromofluoromethane (SS)	99	% Recovery	1	NA		03/13/01
X0190	XG.2001.300-8	NA	Toluene-D8 (SS)	101	% Recovery	1	NA		03/13/01

Surrogate Summary: QC

Client: **CH2MHILL**

Project: **0103199** **160660.02.FF.SA**

QC Type **MB** QC Matrix **SOLID**

QC Group	Run Sequence	CAS #	Analyte	Result	Units	Dilution Factor	Detection Limit	Code	Run Date
X0177-001		BTEXALL							
X0177	XG.2001.263-1	NA	4-Bromofluorobenzene	98	% Recovery	1	NA		03/05/0
X0177	XG.2001.263-1	NA	aaa-Trifluorotoluene	99	% Recovery	1	NA		03/05/0
X0177-012		BTEXALL							
X0177	XG.2001.314-18	NA	4-Bromofluorobenzene	100	% Recovery	1	NA		03/15/0
X0177	XG.2001.314-18	NA	aaa-Trifluorotoluene	100	% Recovery	1	NA		03/15/0
X0177-014		BTEXALL							
X0177	XG.2001.335-1	NA	4-Bromofluorobenzene	99	% Recovery	1	NA		03/19/0
X0177	XG.2001.335-1	NA	aaa-Trifluorotoluene	100	% Recovery	1	NA		03/19/0
X0177-020		BTEXALL							
X0177	XG.2001.335-3	NA	4-Bromofluorobenzene	99	% Recovery	1	NA		03/20/0
X0177	XG.2001.335-3	NA	aaa-Trifluorotoluene	100	% Recovery	1	NA		03/20/0
X0177-023		BTEXALL							
X0177	XG.2001.375-1	NA	4-Bromofluorobenzene	99	% Recovery	1	NA		03/29/0
X0177	XG.2001.375-1	NA	aaa-Trifluorotoluene	100	% Recovery	1	NA		03/29/0
X0177-035		BTEXALL							
X0177	XG.2001.386-2	NA	4-Bromofluorobenzene	100	% Recovery	1	NA		03/30/0
X0177	XG.2001.386-2	NA	aaa-Trifluorotoluene	99	% Recovery	1	NA		03/30/0
X0182-001		GRO							
X0182	XG.2001.271-1	NA	4-Bromofluorobenzene-FID	89	% Recovery	1	NA		03/07/0
X0182	XG.2001.271-1	NA	4-Bromofluorobenzene-PID	ND	% Recovery	1	NA		03/07/0
X0182	XG.2001.271-1	NA	aaa-Trifluorotoluene-FID	101	% Recovery	1	NA		03/07/0
X0182	XG.2001.271-1	NA	aaa-Trifluorotoluene-PID	22	% Recovery	1	NA		03/07/0
X0182-012		GRO							
X0182	XG.2001.294-1	NA	4-Bromofluorobenzene-FID	100	% Recovery	1	NA		03/08/0
X0182	XG.2001.294-1	NA	4-Bromofluorobenzene-PID	ND	% Recovery	1	NA		03/08/0
X0182	XG.2001.294-1	NA	aaa-Trifluorotoluene-FID	85	% Recovery	1	NA		03/08/0
X0182	XG.2001.294-1	NA	aaa-Trifluorotoluene-PID	ND	% Recovery	1	NA		03/08/0
X0182-023		GRO							
X0182	XG.2001.294-10	NA	4-Bromofluorobenzene-FID	90	% Recovery	1	NA		03/12/0
X0182	XG.2001.294-10	NA	4-Bromofluorobenzene-PID	204	% Recovery	1	NA		03/12/0
X0182	XG.2001.294-10	NA	aaa-Trifluorotoluene-FID	102	% Recovery	1	NA		03/12/0
X0182	XG.2001.294-10	NA	aaa-Trifluorotoluene-PID	ND	% Recovery	1	NA		03/12/0
X0182-026		GRO							
X0182	XG.2001.297-1	NA	4-Bromofluorobenzene-FID	88	% Recovery	1	NA		03/13/0
X0182	XG.2001.297-1	NA	4-Bromofluorobenzene-PID	70	% Recovery	1	NA		03/13/0
X0182	XG.2001.297-1	NA	aaa-Trifluorotoluene-FID	98	% Recovery	1	NA		03/13/0
X0182	XG.2001.297-1	NA	aaa-Trifluorotoluene-PID	ND	% Recovery	1	NA		03/13/0

Surrogate Summary: QC

Client: **CH2MHILL**

Project: **0103199** **160660.02.FF.SA**

X0182-029		GRO							
X0182	XG.2001.297-4	NA	4-Bromofluorobenzene-FID	89	% Recovery	1	NA		03/14/01
X0182	XG.2001.297-4	NA	4-Bromofluorobenzene-PID	ND	% Recovery	1	NA		03/14/01
X0182	XG.2001.297-4	NA	aaa-Trifluorotoluene-FID	101	% Recovery	1	NA		03/14/01
X0182	XG.2001.297-4	NA	aaa-Trifluorotoluene-PID	93	% Recovery	1	NA		03/14/01
X0183-001		DRO							
X0183	XG.2001.276-1	NA	O-terphenyl	88	% Recovery	1	NA		03/08/01
X0183-023		DRO							
X0183	XG.2001.298-1	NA	O-terphenyl	89	% Recovery	1	NA		03/14/01
X0190-001		8260							
X0190	XG.2001.300-1	NA	1,2 Dichloroethane-D4 (SS)	93	% Recovery	1	NA		03/13/01
X0190	XG.2001.300-1	NA	4-Bromofluorobenzene (SS)	105	% Recovery	1	NA		03/13/01
X0190	XG.2001.300-1	NA	Dibromofluoromethane (SS)	98	% Recovery	1	NA		03/13/01
X0190	XG.2001.300-1	NA	Toluene-D8 (SS)	104	% Recovery	1	NA		03/13/01
X0190-014		8260							
X0190	XG.2001.300-11	NA	1,2 Dichloroethane-D4 (SS)	90	% Recovery	1	NA		03/14/01
X0190	XG.2001.300-11	NA	4-Bromofluorobenzene (SS)	98	% Recovery	1	NA		03/14/01
X0190	XG.2001.300-11	NA	Dibromofluoromethane (SS)	98	% Recovery	1	NA		03/14/01
X0190	XG.2001.300-11	NA	Toluene-D8 (SS)	101	% Recovery	1	NA		03/14/01
X0190-021		8260							
	XG.2001.330-1	NA	1,2 Dichloroethane-D4 (SS)	98	% Recovery	1	NA		03/20/01
X0190	XG.2001.330-1	NA	4-Bromofluorobenzene (SS)	100	% Recovery	1	NA		03/20/01
X0190	XG.2001.330-1	NA	Dibromofluoromethane (SS)	102	% Recovery	1	NA		03/20/01
X0190	XG.2001.330-1	NA	Toluene-D8 (SS)	102	% Recovery	1	NA		03/20/01
X0190-025		8260							
X0190	XG.2001.339-1	NA	1,2 Dichloroethane-D4 (SS)	98	% Recovery	1	NA		03/21/01
X0190	XG.2001.339-1	NA	4-Bromofluorobenzene (SS)	98	% Recovery	1	NA		03/21/01
X0190	XG.2001.339-1	NA	Dibromofluoromethane (SS)	101	% Recovery	1	NA		03/21/01
X0190	XG.2001.339-1	NA	Toluene-D8 (SS)	102	% Recovery	1	NA		03/21/01
X0190-032		8260							
X0190	XG.2001.367-1	NA	1,2 Dichloroethane-D4 (SS)	99	% Recovery	1	NA		03/27/01
X0190	XG.2001.367-1	NA	4-Bromofluorobenzene (SS)	99	% Recovery	1	NA		03/27/01
X0190	XG.2001.367-1	NA	Dibromofluoromethane (SS)	102	% Recovery	1	NA		03/27/01
X0190	XG.2001.367-1	NA	Toluene-D8 (SS)	101	% Recovery	1	NA		03/27/01
X0190-039		8260							
X0190	XG.2001.367-7	NA	1,2 Dichloroethane-D4 (SS)	91	% Recovery	1	NA		03/28/01
X0190	XG.2001.367-7	NA	4-Bromofluorobenzene (SS)	97	% Recovery	1	NA		03/28/01
X0190	XG.2001.367-7	NA	Dibromofluoromethane (SS)	99	% Recovery	1	NA		03/28/01
X0190	XG.2001.367-7	NA	Toluene-D8 (SS)	101	% Recovery	1	NA		03/28/01

Surrogate Summary: QC

Client: **CH2MHILL**

Project: **0103199** **160660.02.FF.SA**

QC Type **MS** QC Matrix **SOLID**

QC Group	Run Sequence	CAS #	Analyte	Result	Units	Dilution Factor	Detection Limit	Code	Run Date
X0177-010		**BTEXALL**							
X0177	XG.2001.263-9	NA	4-Bromofluorobenzene	100	% Recovery	1	NA		03/05/01
X0177	XG.2001.263-9	NA	aaa-Trifluorotoluene	99	% Recovery	1	NA		03/05/01
X0182-006		**GRO**							
X0182	XG.2001.271-6	NA	4-Bromofluorobenzene-FID	102	% Recovery	1	NA		03/08/01
X0182	XG.2001.271-6	NA	4-Bromofluorobenzene-PID	321	% Recovery	1	NA		03/08/01
X0182	XG.2001.271-6	NA	aaa-Trifluorotoluene-FID	105	% Recovery	1	NA		03/08/01
X0182	XG.2001.271-6	NA	aaa-Trifluorotoluene-PID	658	% Recovery	1	NA		03/08/01
X0183-012		**DRO**							
X0183	XG.2001.276-11	NA	O-terphenyl	100	% Recovery	1	NA		03/08/01
X0190-005		**8260**							
X0190	XG.2001.300-5	NA	1,2 Dichloroethane-D4 (SS)	89	% Recovery	1	NA		03/13/01
X0190	XG.2001.300-5	NA	4-Bromofluorobenzene (SS)	100	% Recovery	1	NA		03/13/01
X0190	XG.2001.300-5	NA	Dibromofluoromethane (SS)	99	% Recovery	1	NA		03/13/01
X0190	XG.2001.300-5	NA	Toluene-D8 (SS)	102	% Recovery	1	NA		03/13/01

QC Type **MSD** QC Matrix **SOLID**

QC Group	Run Sequence	CAS #	Analyte	Result	Units	Dilution Factor	Detection Limit	Code	Run Date
X0177-011		**BTEXALL**							
X0177	XG.2001.263-10	NA	4-Bromofluorobenzene	100	% Recovery	1	NA		03/05/01
X0177	XG.2001.263-10	NA	aaa-Trifluorotoluene	97	% Recovery	1	NA		03/05/01
X0182-007		**GRO**							
X0182	XG.2001.271-7	NA	4-Bromofluorobenzene-FID	103	% Recovery	1	NA		03/08/01
X0182	XG.2001.271-7	NA	4-Bromofluorobenzene-PID	ND	% Recovery	1	NA		03/08/01
X0182	XG.2001.271-7	NA	aaa-Trifluorotoluene-FID	105	% Recovery	1	NA		03/08/01
X0182	XG.2001.271-7	NA	aaa-Trifluorotoluene-PID	2880	% Recovery	1	NA		03/08/01
X0183-006		**DRO**							
X0183	XG.2001.276-5	NA	O-terphenyl	106	% Recovery	1	NA		03/08/01
X0190-006		**8260**							
X0190	XG.2001.300-6	NA	1,2 Dichloroethane-D4 (SS)	89	% Recovery	1	NA		03/13/01
X0190	XG.2001.300-6	NA	4-Bromofluorobenzene (SS)	102	% Recovery	1	NA		03/13/01
X0190	XG.2001.300-6	NA	Dibromofluoromethane (SS)	99	% Recovery	1	NA		03/13/01
X0190	XG.2001.300-6	NA	Toluene-D8 (SS)	100	% Recovery	1	NA		03/13/01

Assaigai Analytical Laboratories, Inc.

Surrogate Summary: Fraction

Client: **CH2MHILL**

Project: **0103199** **160660.02.FF.SA**

Client Sample ID **ST 106 SB33 90'** Sample Matrix **SOIL**

QC Group	Run Sequence	CAS #	Analyte	Result	Units	Dilution Factor	Detection Limit	Code	Run Date
0103199-01A		GRO							**X0182-030**
X0182	XG.2001.297-5	NA	4-Bromofluorobenzene-FID	89	% Recovery	1	NA		03/14/01
X0182	XG.2001.297-5	NA	4-Bromofluorobenzene-PID	317	% Recovery	1	NA		03/14/01
X0182	XG.2001.297-5	NA	aaa-Trifluorotoluene-FID	101	% Recovery	1	NA		03/14/01
X0182	XG.2001.297-5	NA	aaa-Trifluorotoluene-PID	ND	% Recovery	1	NA		03/14/01
0103199-01B		DRO							**X0183-024**
X0183	XG.2001.298-2	NA	O-terphenyl	87	% Recovery	1	NA		03/14/01
0103199-01C		BTEXALL							**X0177-013**
X0177	XG.2001.314-19	NA	4-Bromofluorobenzene	101	% Recovery	1	NA		03/15/01
X0177	XG.2001.314-19	NA	aaa-Trifluorotoluene	101	% Recovery	1	NA		03/15/01

Client Sample ID **ST 106 SB33 100'** Sample Matrix **SOIL**

QC Group	Run Sequence	CAS #	Analyte	Result	Units	Dilution Factor	Detection Limit	Code	Run Date
0103199-02A		GRO							**X0182-031**
X0182	XG.2001.297-6	NA	4-Bromofluorobenzene-FID	90	% Recovery	1	NA		03/14/01
X0182	XG.2001.297-6	NA	4-Bromofluorobenzene-PID	106	% Recovery	1	NA		03/14/01
X0182	XG.2001.297-6	NA	aaa-Trifluorotoluene-FID	100	% Recovery	1	NA		03/14/01
X0182	XG.2001.297-6	NA	aaa-Trifluorotoluene-PID	39	% Recovery	1	NA		03/14/01
0103199-02B		DRO							**X0183-025**
X0183	XG.2001.298-3	NA	O-terphenyl	84	% Recovery	1	NA		03/14/01
0103199-02C		8260							**X0190-016**
X0190	XG.2001.300-13	NA	1,2 Dichloroethane-D4 (SS)	92	% Recovery	1	NA		03/14/01
X0190	XG.2001.300-13	NA	4-Bromofluorobenzene (SS)	98	% Recovery	1	NA		03/14/01
X0190	XG.2001.300-13	NA	Dibromofluoromethane (SS)	100	% Recovery	1	NA		03/14/01
X0190	XG.2001.300-13	NA	Toluene-D8 (SS)	101	% Recovery	1	NA		03/14/01

Client Sample ID **ST 106 SB33 170'** Sample Matrix **SOIL**

QC Group	Run Sequence	CAS #	Analyte	Result	Units	Dilution Factor	Detection Limit	Code	Run Date
0103199-03A		GRO							**X0182-032**
X0182	XG.2001.297-7	NA	4-Bromofluorobenzene-FID	92	% Recovery	1	NA		03/14/01
X0182	XG.2001.297-7	NA	4-Bromofluorobenzene-PID	2220	% Recovery	1	NA		03/14/01
X0182	XG.2001.297-7	NA	aaa-Trifluorotoluene-FID	103	% Recovery	1	NA		03/14/01
X0182	XG.2001.297-7	NA	aaa-Trifluorotoluene-PID	ND	% Recovery	1	NA		03/14/01

Surrogate Summary: Fraction

Client: **CH2MHILL**

Project: **0103199** **160660.02.FF.SA**

0103199-03B		**DRO**							**X0183-0:6**
X0183	XG.2001.298-4	NA	O-terphenyl	90	% Recovery	1	NA		03/14/01
0103199-03C		**8260**							**X0190-0:5**
X0190	XG.2001.300-12	NA	1,2 Dichloroethane-D4 (SS)	89	% Recovery	1	NA		03/14/01
X0190	XG.2001.300-12	NA	4-Bromofluorobenzene (SS)	98	% Recovery	1	NA		03/14/01
X0190	XG.2001.300-12	NA	Dibromofluoromethane (SS)	97	% Recovery	1	NA		03/14/01
X0190	XG.2001.300-12	NA	Toluene-D8 (SS)	100	% Recovery	1	NA		03/14/01
0103199-03C		**8260**							**X0190-0:0**
X0190	XG.2001.300-17	NA	1,2 Dichloroethane-D4 (SS)	88	% Recovery	1	NA		03/14/01
X0190	XG.2001.300-17	NA	4-Bromofluorobenzene (SS)	97	% Recovery	1	NA		03/14/01
X0190	XG.2001.300-17	NA	Dibromofluoromethane (SS)	95	% Recovery	1	NA		03/14/01
X0190	XG.2001.300-17	NA	Toluene-D8 (SS)	101	% Recovery	1	NA		03/14/01

Client Sample ID **ST 106 SB33 170' DUP** Sample Matrix **SOIL**

QC Group	Run Sequence	CAS #	Analyte	Result	Units	Dilution Factor	Detection Limit	Code	Run Date
0103199-04A		**GRO**							**X0182-0:3**
X0182	XG.2001.297-8	NA	4-Bromofluorobenzene-FID	90	% Recovery	1	NA		03/14/01
X0182	XG.2001.297-8	NA	4-Bromofluorobenzene-PID	200	% Recovery	1	NA		03/14/01
X0182	XG.2001.297-8	NA	aaa-Trifluorotoluene-FID	100	% Recovery	1	NA		03/14/
X0182	XG.2001.297-8	NA	aaa-Trifluorotoluene-PID	ND	% Recovery	1	NA		03/14/
0103199-04B		**8260**							**X0190-0: 7**
X0190	XG.2001.300-14	NA	1,2 Dichloroethane-D4 (SS)	96	% Recovery	1	NA		03/14/01
X0190	XG.2001.300-14	NA	4-Bromofluorobenzene (SS)	98	% Recovery	1	NA		03/14/01
X0190	XG.2001.300-14	NA	Dibromofluoromethane (SS)	97	% Recovery	1	NA		03/14/01
X0190	XG.2001.300-14	NA	Toluene-D8 (SS)	102	% Recovery	1	NA		03/14/01

ASS GAI CH2M 8
ANALYTICAL 3/14/01
LABORATORIES, INC. FR1624 M4

Chain of Custody Record

7300 JEFFERSON N.E.
ALBUQUERQUE, NEW MEXICO 87109
(505) 345-8964

3332 WEDGEWOOD
EL PASO, TEXAS 79925
(915) 593-6000

127 EASTGATE DRIVE, 212-C
LOS ALAMOS, NEW MEXICO 87544
(505) 662-2558

Lab job No. 0103199 Date 3-13-01

Page 1 of 1

Client CH2M HILL

Address 6500 Indian School Rd. NE #350

City / State / Zip ALBQ NM 87110

Project Name / Number KAFB TO-10

Contract / Purchase Order / Quote

Project Manager / Contact HALLORAN LEFEVRE

Telephone No. 884 5600

Fax No. 883 7507

Samplers : (signature) Wm LeFevre

Analysis Required

AAL Fraction Number	Field Sample Number / Location	Date	Time	Sample Type	Type / Size of Container	Preservation Temp	Preservation Chemical	No. of Containers	GRO	DRO	VOC	SVOC	BTEX					Remarks
1A,BC	ST 106 SB33 90'	3-12	1615	Soil	4oz	ICE	-	3	X	X			X					
2A,BC	ST 106 SB33 100'	3-12	1620	Soil	4oz	ICE	-	3	X	X	X							
3A,BC	ST 106 SB33 170'	3-13	1330	Soil	4oz	ICE	-	3	X	X	X							
4A,B	ST 106 SB33 170' DUP	3-13	1330	Soil	4oz	ICE	-	2	X		X							

Relinquished by:	Date	Received by:	Relinquished by:	Date	Received by:
Signature Wm LeFevre	3-13	Signature [illegible]	Signature		Signature
Printed WM J LeFevre	Time	Printed [illegible]	Printed	Time	Printed
Company CH2M HILL	1530	Company [illegible]	Company		Company
Reason DROP @ LAB		Reason [illegible]	Reason		Reason

Method of Shipment:

Shipment No.

Special Instructions:

Comments: 24 Hr TAT on GRO/DRO, Please

After analysis, samples are to be:

- ☐ Disposed of (additional fee)
- ☐ Stored (30 days max)
- ☐ Stored over 30 days (additional fee)
- ☐ Returned to customer

COURIER

ASSAIGAI
ANALYTICAL
LABORATORIES, INC.
7300 Jefferson, NE • Albuquerque, New Mexico 87109 • (505) 345-8964 • FAX (505) 345-7259
3332 Wedgewood Dr., Suite N • El Paso, Texas 79925 • (915) 593-6000 • FAX (915) 593-7820
127 Eastgate Drive, 212-C • Los Alamos, New Mexico 87544 • (505) 662-2555

Explanation of codes

B	*analyte detected in Method Blank*
E	*result is estimated*
H	*analyzed out of hold time*
N	*tentatively identified compound*
S	*subcontracted*
1-9	*see footnote*

CH2M HILL
attn: **SHARON MINCHAK**
6001 INDIAN SCHOOL RD NE STE 350
ALBUQUERQUE, NM 87110-4140

Assaigai Analytical Laboratories, Inc.

Certificate of Analysis

Client: **CH2M HILL**
Project: **0103259** **KAFB DO 23**

Wilfred D. Biava: President of Assaigai Analytical Laboratories, Inc.

Client Sample ID ***ST 106 SB33 230'*** Sample Matrix ***SOIL*** Sample Collected ***03/19/01 14:15:00***

QC Group	Run Sequence	CAS #	Analyte	Result	Units	Dilution Factor	Detection Limit	Code	Run Date
0103259-01A		**SW846 5030A/8015A GRO by GC/FID**							
X0194	XG.2001.328-2		Gasoline Range Organics	1.5	mg / Kg	1	0.25		03/20/01
0103259-01B		**SW846 8260A Purgeable VOCs by GC/MS**							
X0190	XG.2001.330-2	75-34-3	1,1 Dichloroethane	ND	mg / Kg	1	0.005		03/20/01
X0190	XG.2001.330-2	75-34-3	1,1 Dichloroethene	ND	mg / Kg	1	0.005		03/20/01
X0190	XG.2001.330-2	71-55-6	1,1,1 Trichloroethane	ND	mg / Kg	1	0.005		03/20/01
X0190	XG.2001.330-2	630-20-6	1,1,1,2 Tetrachloroethane	ND	mg / Kg	1	0.005		03/20/01
X0190	XG.2001.330-2	79-00-5	1,1,2 Trichloroethane	ND	mg / Kg	1	0.005		03/20/01
X0190	XG.2001.330-2	79-34-5	1,1,2,2 Tetrachloroethane	ND	mg / Kg	1	0.005		03/20/01
X0190	XG.2001.330-2	106-93-4	1,2 Dibromoethane (EDB)	ND	mg / Kg	1	0.005		03/20/01
X0190	XG.2001.330-2	95-50-1	1,2 Dichlorobenzene	ND	mg / Kg	1	0.005		03/20/01
X0190	XG.2001.330-2	107-06-2	1,2 Dichloroethane	ND	mg / Kg	1	0.005		03/20/01
X0190	XG.2001.330-2	78-87-5	1,2 Dichloropropane	ND	mg / Kg	1	0.005		03/20/01
X0190	XG.2001.330-2	96-18-4	1,2,3 Trichloropropane	ND	mg / Kg	1	0.005		03/20/01
X0190	XG.2001.330-2	95-63-6	1,2,4-Trimethylbenzene	ND	mg / Kg	1	0.005		03/20/01
X0190	XG.2001.330-2	541-73-1	1,3 Dichlorobenzene	ND	mg / Kg	1	0.005		03/20/01
X0190	XG.2001.330-2	108-67-8	1,3,5-Trimethylbenzene	ND	mg / Kg	1	0.005		03/20/01
X0190	XG.2001.330-2	764-41-0	1,4 Dichloro-2-butene	ND	mg / Kg	1	0.05		03/20/01
X0190	XG.2001.330-2	106-46-7	1,4 Dichlorobenzene	ND	mg / Kg	1	0.005		03/20/01
X0190	XG.2001.330-2	78-93-3	2-Butanone (MEK)	ND	mg / Kg	1	0.025		03/20/01
X0190	XG.2001.330-2	110-75-8	2-Chloroethylvinylether	ND	mg / Kg	1	0.025		03/20/01
[illegible]0	XG.2001.330-2	591-78-6	2-Hexanone (MBK)	ND	mg / Kg	1	0.025		03/20/01
[illegible]0	XG.2001.330-2	108-10-1	4-Methyl-2-pentanone (MIBK)	ND	mg / Kg	1	0.025		03/20/01

Member
American Council of
Independent Laboratories, Inc.

REPRODUCTION OF THIS REPORT IN LESS THAN FULL REQUIRES THE WRITTEN CONSENT OF AAL
THIS REPORT MAY NOT BE USED IN ANY MANNER BY THE CLIENT OR ANY OTHER THIRD PARTY TO CLAIM
PRODUCT ENDORSEMENT BY ANY ACCREDITATION PROGRAM

Certificate of Analysis

Client: **CH2M HILL**

Project: **0103259** **KAFB DO 23**

X0190	XG.2001.330-2	67-64-1	Acetone	ND	mg / Kg	1	0.05		03/20/0
X0190	XG.2001.330-2	107-02-8	Acrolein	ND	mg / Kg	1	0.1		03/20/0
X0190	XG.2001.330-2	107-13-1	Acrylonitrile	ND	mg / Kg	1	0.1		03/20/0
X0190	XG.2001.330-2	71-43-2	Benzene	ND	mg / Kg	1	0.005		03/20/0
X0190	XG.2001.330-2	75-27-4	Bromodichloromethane	ND	mg / Kg	1	0.005		03/20/0
X0190	XG.2001.330-2	75-25-2	Bromoform	ND	mg / Kg	1	0.005		03/20/0
X0190	XG.2001.330-2	74-83-9	Bromomethane	ND	mg / Kg	1	0.025		03/20/0
X0190	XG.2001.330-2	75-15-0	Carbon disulfide	ND	mg / Kg	1	0.025		03/20/0
X0190	XG.2001.330-2	56-23-5	Carbon tetrachloride	ND	mg / Kg	1	0.005		03/20/0
X0190	XG.2001.330-2	108-90-7	Chlorobenzene	ND	mg / Kg	1	0.005		03/20/0
X0190	XG.2001.330-2	124-48-1	Chlorodibromomethane	ND	mg / Kg	1	0.005		03/20/0
X0190	XG.2001.330-2	75-00-3	Chloroethane	ND	mg / Kg	1	0.025		03/20/0
X0190	XG.2001.330-2	67-66-3	Chloroform	ND	mg / Kg	1	0.005		03/20/0
X0190	XG.2001.330-2	74-87-3	Chloromethane	ND	mg / Kg	1	0.025		03/20/0
X0190	XG.2001.330-2	156-59-2	cis-1,2 dichloroethene	ND	mg / Kg	1	0.005		03/20/0
X0190	XG.2001.330-2	10061-01-5	cis-1,3 dichloropropene	ND	mg / Kg	1	0.005		03/20/0
X0190	XG.2001.330-2	74-95-3	Dibromomethane	ND	mg / Kg	1	0.005		03/20/0
X0190	XG.2001.330-2	97-63-2	Ethyl methacrylate	ND	mg / Kg	1	0.025		03/20/0
X0190	XG.2001.330-2	100-41-4	Ethylbenzene	ND	mg / Kg	1	0.005		03/20/0
X0190	XG.2001.330-2		Freon 113	ND	mg / Kg	1	0.025		03/20/0
X0190	XG.2001.330-2	75-71-8	Freon 12	ND	mg / Kg	1	0.05		03/20/0
X0190	XG.2001.330-2	74-88-4	Iodomethane	ND	mg / Kg	1	0.025		03/20/0
X0190	XG.2001.330-2	1634-04-4	Methyl t-butyl ether (MTBE)	ND	mg / Kg	1	0.005		03/20
X0190	XG.2001.330-2	75-09-2	Methylene chloride	ND	mg / Kg	1	0.05		03/2
X0190	XG.2001.330-2	91-20-3	Naphthalene	ND	mg / Kg	1	0.025		03/20/0
X0190	XG.2001.330-2	95-47-6	o-Xylene	ND	mg / Kg	1	0.005		03/20/0
X0190	XG.2001.330-2	108-38-3/106-42	p/m Xylenes	ND	mg / Kg	1	0.01		03/20/0
X0190	XG.2001.330-2	100-42-5	Styrene	ND	mg / Kg	1	0.005		03/20/0
X0190	XG.2001.330-2	156-60-5	t-1,2 Dichloroethene	ND	mg / Kg	1	0.005		03/20/0
X0190	XG.2001.330-2	10061-02-6	t-1,3 Dichloropropene	ND	mg / Kg	1	0.005		03/20/0
X0190	XG.2001.330-2	127-18-4	Tetrachloroethene	ND	mg / Kg	1	0.005		03/20/0
X0190	XG.2001.330-2	108-88-3	Toluene	ND	mg / Kg	1	0.005		03/20/0
X0190	XG.2001.330-2	79-01-6	Trichloroethene	ND	mg / Kg	1	0.005		03/20/0
X0190	XG.2001.330-2	75-69-4	Trichlorofluoromethane	ND	mg / Kg	1	0.025		03/20/0
X0190	XG.2001.330-2	108-05-4	Vinyl acetate	ND	mg / Kg	1	0.025		03/20/0
X0190	XG.2001.330-2	75-01-4	Vinyl chloride	ND	mg / Kg	1	0.025		03/20/0

0103259-01C **SW846 ME/8015A Diesel Range Organics by GC/FID**

X0198	XG.2001.334-4		Diesel Range Organics	ND	mg / Kg	1	25		03/20/0

Client Sample ID ***ST 106 SB33 250'*** Sample Matrix ***SOIL*** Sample Collected *03/1 /01 15:4 :00*

QC Group	Run Sequence	CAS #	Analyte	Result	Units	Dilution Factor	Detection Limit	Code	Run Date

0103259-02A **SW846 5030A/8015A GRO by GC/FID**

X0194	XG.2001.328-3		Gasoline Range Organics	ND	mg / Kg	1	0.25		03/2

Certificate of Analysis

Client: **CH2M HILL**

Project: **0103259** **KAFB DO 23**

0103259-02B **SW846 8260A Purgeable VOCs by GC/MS**

X0190	XG.2001.330-3	75-34-3	1,1 Dichloroethane	ND	mg / Kg	1	0.005		03/20/01
X0190	XG.2001.330-3	75-34-3	1,1 Dichloroethene	ND	mg / Kg	1	0.005		03/20/01
X0190	XG.2001.330-3	71-55-6	1,1,1 Trichloroethane	ND	mg / Kg	1	0.005		03/20/01
X0190	XG.2001.330-3	630-20-6	1,1,1,2 Tetrachloroethane	ND	mg / Kg	1	0.005		03/20/01
X0190	XG.2001.330-3	79-00-5	1,1,2 Trichloroethane	ND	mg / Kg	1	0.005		03/20/01
X0190	XG.2001.330-3	79-34-5	1,1,2,2 Tetrachloroethane	ND	mg / Kg	1	0.005		03/20/01
X0190	XG.2001.330-3	106-93-4	1,2 Dibromoethane (EDB)	ND	mg / Kg	1	0.005		03/20/01
X0190	XG.2001.330-3	95-50-1	1,2 Dichlorobenzene	ND	mg / Kg	1	0.005		03/20/01
X0190	XG.2001.330-3	107-06-2	1,2 Dichloroethane	ND	mg / Kg	1	0.005		03/20/01
X0190	XG.2001.330-3	78-87-5	1,2 Dichloropropane	ND	mg / Kg	1	0.005		03/20/01
X0190	XG.2001.330-3	96-18-4	1,2,3 Trichloropropane	ND	mg / Kg	1	0.005		03/20/01
X0190	XG.2001.330-3	95-63-6	1,2,4-Trimethylbenzene	ND	mg / Kg	1	0.005		03/20/01
X0190	XG.2001.330-3	541-73-1	1,3 Dichlorobenzene	ND	mg / Kg	1	0.005		03/20/01
X0190	XG.2001.330-3	108-67-8	1,3,5-Trimethylbenzene	ND	mg / Kg	1	0.005		03/20/01
X0190	XG.2001.330-3	764-41-0	1,4 Dichloro-2-butene	ND	mg / Kg	1	0.05		03/20/01
X0190	XG.2001.330-3	106-46-7	1,4 Dichlorobenzene	ND	mg / Kg	1	0.005		03/20/01
X0190	XG.2001.330-3	78-93-3	2-Butanone (MEK)	ND	mg / Kg	1	0.025		03/20/01
X0190	XG.2001.330-3	110-75-8	2-Chloroethylvinylether	ND	mg / Kg	1	0.025		03/20/01
X0190	XG.2001.330-3	591-78-6	2-Hexanone (MBK)	ND	mg / Kg	1	0.025		03/20/01
[illegible]	XG.2001.330-3	108-10-1	4-Methyl-2-pentanone (MIBK)	ND	mg / Kg	1	0.025		03/20/01
	XG.2001.330-4	67-64-1	Acetone	0.16	mg / Kg	1	0.05		03/20/01
X0190	XG.2001.330-3	107-02-8	Acrolein	ND	mg / Kg	1	0.1		03/20/01
X0190	XG.2001.330-3	107-13-1	Acrylonitrile	ND	mg / Kg	1	0.1		03/20/01
X0190	XG.2001.330-3	71-43-2	Benzene	ND	mg / Kg	1	0.005		03/20/01
X0190	XG.2001.330-3	75-27-4	Bromodichloromethane	ND	mg / Kg	1	0.005		03/20/01
X0190	XG.2001.330-3	75-25-2	Bromoform	ND	mg / Kg	1	0.005		03/20/01
X0190	XG.2001.330-3	74-83-9	Bromomethane	ND	mg / Kg	1	0.025		03/20/01
X0190	XG.2001.330-3	75-15-0	Carbon disulfide	ND	mg / Kg	1	0.025		03/20/01
X0190	XG.2001.330-3	56-23-5	Carbon tetrachloride	ND	mg / Kg	1	0.005		03/20/01
X0190	XG.2001.330-3	108-90-7	Chlorobenzene	ND	mg / Kg	1	0.005		03/20/01
X0190	XG.2001.330-3	124-48-1	Chlorodibromomethane	ND	mg / Kg	1	0.005		03/20/01
X0190	XG.2001.330-3	75-00-3	Chloroethane	ND	mg / Kg	1	0.025		03/20/01
X0190	XG.2001.330-3	67-66-3	Chloroform	ND	mg / Kg	1	0.005		03/20/01
X0190	XG.2001.330-3	74-87-3	Chloromethane	ND	mg / Kg	1	0.025		03/20/01
X0190	XG.2001.330-3	156-59-2	cis-1,2 dichloroethene	ND	mg / Kg	1	0.005		03/20/01
X0190	XG.2001.330-3	10061-01-5	cis-1,3 dichloropropene	ND	mg / Kg	1	0.005		03/20/01
X0190	XG.2001.330-3	74-95-3	Dibromomethane	ND	mg / Kg	1	0.005		03/20/01
X0190	XG.2001.330-3	97-63-2	Ethyl methacrylate	ND	mg / Kg	1	0.025		03/20/01
X0190	XG.2001.330-3	100-41-4	Ethylbenzene	ND	mg / Kg	1	0.005		03/20/01
X0190	XG.2001.330-3		Freon 113	ND	mg / Kg	1	0.025		03/20/01
X0190	XG.2001.330-3	75-71-8	Freon 12	ND	mg / Kg	1	0.05		03/20/01
X0190	XG.2001.330-3	74-88-4	Iodomethane	ND	mg / Kg	1	0.025		03/20/01
X0190	XG.2001.330-3	1634-04-4	Methyl t-butyl ether (MTBE)	ND	mg / Kg	1	0.005		03/20/01
X0190	XG.2001.330-3	75-09-2	Methylene chloride	ND	mg / Kg	1	0.05		03/20/01
X0190	XG.2001.330-3	91-20-3	Naphthalene	ND	mg / Kg	1	0.025		03/20/01
[illegible]0	XG.2001.330-3	95-47-6	o-Xylene	ND	mg / Kg	1	0.005		03/20/01

Certificate of Analysis

Client: **CH2M HILL**

Project: **0103259** **KAFB DO 23**

X0190	XG.2001.330-3	108-38-3/106-42	p/m Xylenes	ND	mg / Kg	1	0.01		03/20/01
X0190	XG.2001.330-3	100-42-5	Styrene	ND	mg / Kg	1	0.005		03/20/01
X0190	XG.2001.330-3	156-60-5	t-1,2 Dichloroethene	ND	mg / Kg	1	0.005		03/20/01
X0190	XG.2001.330-3	10061-02-6	t-1,3 Dichloropropene	ND	mg / Kg	1	0.005		03/20/01
X0190	XG.2001.330-3	127-18-4	Tetrachloroethene	ND	mg / Kg	1	0.005		03/20/01
X0190	XG.2001.330-3	108-88-3	Toluene	ND	mg / Kg	1	0.005		03/20/01
X0190	XG.2001.330-3	79-01-6	Trichloroethene	ND	mg / Kg	1	0.005		03/20/01
X0190	XG.2001.330-3	75-69-4	Trichlorofluoromethane	ND	mg / Kg	1	0.025		03/20/01
X0190	XG.2001.330-3	108-05-4	Vinyl acetate	ND	mg / Kg	1	0.025		03/20/01
X0190	XG.2001.330-3	75-01-4	Vinyl chloride	ND	mg / Kg	1	0.025		03/20/01

0103259-02C **SW846 ME/8015A Diesel Range Organics by GC/FID**

X0198	XG.2001.334-7		Diesel Range Organics	86	mg / Kg	1	25		03/20/01

**** Sample specific Detection Limit is determined by multiplying the sample Dilution Factor by the listed Reporting Detection Limit. ****

**** ND = Not detected: less than the sample specific Detection Limit. Results relate only to the items tested. ****

AS GAI CHAMPLE
ANALYTICAL 3/20/01 M.S.
LABORATORIES, INC.

Chain of Custody Record

Lab job No. 0103259 Date 3-19-01

Page 1 of 1

7300 JEFFERSON N.E.
ALBUQUERQUE, NEW MEXICO 8710
(505) 345-8964

3332 WEDGEWOOD
EL PASO, TEXAS 79925
(915) 593-6000

127 EASTGATE DRIVE, 212-C
LOS ALAMOS, NEW MEXICO 87544
(505) 662-2558

Client CH2M HILL
Address 6501 INDIANSCHOOL RD NE #350
City / State / Zip ABQ NM 87110
Project Name / Number KAFB D023
Contract / Purchase Order / Quote

Project Manager / Contact HALLORAN LEFEVRE
Telephone No. 884-5600
Fax No. 883-7507
Samplers : (signature) [signature]

Analysis Required

AAL Fraction Number	Field Sample Number / Location	Date	Time	Sample Type	Type / Size of Container	Preservation Temp.	Preservation Chemical	No. of Containers	GRO	DRO	VOC								Remarks
AAC	ST106 SB33 230'	3-19	1415	Soil	4oz	ICE	–	3	X	X	X								
AAC	ST106 SB33 250'	3-19	1415	Soil	4oz	ICE	–	3	X	X	X								

Relinquished by:	Date	Received by:	Relinquished by:	Date	Received by:
Signature [signature]	3-19	Signature [signature]	Signature		Signature
Printed HALLORAN LEFEVRE	Time	Printed A. BRAZIL	Printed	Time	Printed
Company CH2M HILL	1615	Company AAL	Company		Company
Reason HAND TO LAB COURIER		Reason analysis	Reason		Reason

Method of Shipment:
Shipment No.
Special Instructions:

Comments: 24 hr TAT on DRO/GRO

After analysis, samples are to be:
- ☐ Disposed of (additional fee)
- ☐ Stored (30 days max)
- ☐ Stored over 30 days (additional fee)
- ☐ Returned to customer

COURIER

ASSAIGAI
ANALYTICAL
LABORATORIES, INC.
7300 Jefferson, NE • Albuquerque, New Mexico 87109 • (505) 345-8964 • FAX (505) 345-7259
3332 Wedgewood Dr., Suite N • El Paso, Texas 79925 • (915) 593-6000 • FAX (915) 593-7820
127 Eastgate Drive, 212-C • Los Alamos, New Mexico 87544 • (505) 662-2558

RECEIVED APR 1 1 2001

Explanation of codes

B	analyte detected in Method Blank
E	result is estimated
H	analyzed out of hold time
N	tentatively identified compound
S	subcontracted
1-9	see footnote

CH2MHILL
attn: **AMY HALLORAN**
6001 INDIAN SCHOOL RD NE STE 350
ALBUQUERQUE, NM 87110-4140

Assaigai Analytical Laboratories, Inc.

Certificate of Analysis

Client: **CH2MHILL**
Project: **0103365** **160660.02.FF.SA**

William P. Biava: President of Assaigai Analytical Laboratories, Inc.

Client Sample ID ***ST106 SB34 110'*** Sample Matrix ***SOIL*** Sample Collected ***03/24/01 14:48:00***

QC Group	Run Sequence	CAS #	Analyte	Result	Units	Dilution Factor	Detection Limit	Code	Run Date
0103365-01A		**SW846 5030A/8015A GRO by GC/FID**							
X0194	XG.2001.364-2		Gasoline Range Organics	ND	mg / Kg	1	0.25		03/27/01
0103365-01B		**SW846 ME/8015A Diesel Range Organics by GC/FID**							
X0198	XG.2001.361-2		Diesel Range Organics	ND	mg / Kg	1	25		03/27/01

Client Sample ID ***ST106 SB34 130'*** Sample Matrix ***SOIL*** Sample Collected ***03/25/01 08:00:00***

QC Group	Run Sequence	CAS #	Analyte	Result	Units	Dilution Factor	Detection Limit	Code	Run Date
0103365-02A		**SW846 5030A/8015A GRO by GC/FID**							
X0194	XG.2001.364-3		Gasoline Range Organics	ND	mg / Kg	1	0.25		03/27/01
0103365-02B		**SW846 ME/8015A Diesel Range Organics by GC/FID**							
X0198	XG.2001.361-3		Diesel Range Organics	ND	mg / Kg	1	25		03/27/01
0103365-02C		**SW846 8260A Purgeable VOCs by GC/MS**							
X01105	XG.2001.376-4	75-34-3	1,1 Dichloroethane	ND	mg / Kg	1	0.005		03/29/01
X01105	XG.2001.376-4	75-34-3	1,1 Dichloroethene	ND	mg / Kg	1	0.005		03/29/01
X01105	XG.2001.376-4	71-55-6	1,1,1 Trichloroethane	ND	mg / Kg	1	0.005		03/29/01
[illegible]05	XG.2001.376-4	630-20-6	1,1,1,2 Tetrachloroethane	ND	mg / Kg	1	0.005		03/29/01
[illegible]05	XG.2001.376-4	79-00-5	1,1,2 Trichloroethane	ND	mg / Kg	1	0.005		03/29/01

Member:
American Council of
Independent Laboratories, Inc.

REPRODUCTION OF THIS REPORT IN LESS THAN FULL REQUIRES THE WRITTEN CONSENT OF AAL.
THIS REPORT MAY NOT BE USED IN ANY MANNER BY THE CLIENT OR ANY OTHER THIRD PARTY TO CLAIM
PRODUCT ENDORSEMENT BY ANY ACCREDITATION PROGRAM.

Certificate of Analysis

RECEIVED APR 1 1 2001

Client: **CH2MHILL**

Project: **0103365** **160660.02.FF.SA**

X01105	XG.2001.376-4	79-34-5	1,1,2,2 Tetrachloroethane	ND	mg / Kg	1	0.005		03/29/01
X01105	XG.2001.376-4	106-93-4	1,2 Dibromoethane (EDB)	ND	mg / Kg	1	0.005		03/29/01
X01105	XG.2001.376-4	95-50-1	1,2 Dichlorobenzene	ND	mg / Kg	1	0.005		03/29/01
X01105	XG.2001.376-4	107-06-2	1,2 Dichloroethane	ND	mg / Kg	1	0.005		03/29/01
X01105	XG.2001.376-4	78-87-5	1,2 Dichloropropane	ND	mg / Kg	1	0.005		03/29/01
X01105	XG.2001.376-4	96-18-4	1,2,3 Trichloropropane	ND	mg / Kg	1	0.005		03/29/01
X01105	XG.2001.376-4	95-63-6	1,2,4-Trimethylbenzene	ND	mg / Kg	1	0.005		03/29/01
X01105	XG.2001.376-4	541-73-1	1,3 Dichlorobenzene	ND	mg / Kg	1	0.005		03/29/01
X01105	XG.2001.376-4	108-67-8	1,3,5-Trimethylbenzene	ND	mg / Kg	1	0.005		03/29/01
X01105	XG.2001.376-4	764-41-0	1,4 Dichloro-2-butene	ND	mg / Kg	1	0.05		03/29/01
X01105	XG.2001.376-4	106-46-7	1,4 Dichlorobenzene	ND	mg / Kg	1	0.005		03/29/01
X01105	XG.2001.376-4	78-93-3	2-Butanone (MEK)	ND	mg / Kg	1	0.025		03/29/01
X01105	XG.2001.376-4	110-75-8	2-Chloroethylvinylether	ND	mg / Kg	1	0.025		03/29/01
X01105	XG.2001.376-4	591-78-6	2-Hexanone (MBK)	ND	mg / Kg	1	0.025		03/29/01
X01105	XG.2001.376-4	108-10-1	4-Methyl-2-pentanone (MIBK)	ND	mg / Kg	1	0.025		03/29/01
X01105	XG.2001.376-4	67-64-1	Acetone	ND	mg / Kg	1	0.05		03/29/01
X01105	XG.2001.376-4	107-02-8	Acrolein	ND	mg / Kg	1	0.1		03/29/01
X01105	XG.2001.376-4	107-13-1	Acrylonitrile	ND	mg / Kg	1	0.1		03/29/01
X01105	XG.2001.376-4	71-43-2	Benzene	ND	mg / Kg	1	0.005		03/29/01
X01105	XG.2001.376-4	75-27-4	Bromodichloromethane	ND	mg / Kg	1	0.005		03/29/01
X01105	XG.2001.376-4	75-25-2	Bromoform	ND	mg / Kg	1	0.005		03/29/01
X01105	XG.2001.376-4	74-83-9	Bromomethane	ND	mg / Kg	1	0.025		03/29/01
X01105	XG.2001.376-4	75-15-0	Carbon disulfide	ND	mg / Kg	1	0.025		03/29/01
X01105	XG.2001.376-4	56-23-5	Carbon tetrachloride	ND	mg / Kg	1	0.005		03/29/01
X01105	XG.2001.376-4	108-90-7	Chlorobenzene	ND	mg / Kg	1	0.005		03/29/01
X01105	XG.2001.376-4	124-48-1	Chlorodibromomethane	ND	mg / Kg	1	0.005		03/29/01
X01105	XG.2001.376-4	75-00-3	Chloroethane	ND	mg / Kg	1	0.025		03/29/01
X01105	XG.2001.376-4	67-66-3	Chloroform	ND	mg / Kg	1	0.005		03/29/01
X01105	XG.2001.376-4	74-87-3	Chloromethane	ND	mg / Kg	1	0.025		03/29/01
X01105	XG.2001.376-4	156-59-2	cis-1,2 dichloroethene	ND	mg / Kg	1	0.005		03/29/01
X01105	XG.2001.376-4	10061-01-5	cis-1,3 dichloropropene	ND	mg / Kg	1	0.005		03/29/01
X01105	XG.2001.376-4	74-95-3	Dibromomethane	ND	mg / Kg	1	0.005		03/29/01
X01105	XG.2001.376-4	97-63-2	Ethyl methacrylate	ND	mg / Kg	1	0.025		03/29/01
X01105	XG.2001.376-4	100-41-4	Ethylbenzene	ND	mg / Kg	1	0.005		03/29/01
X01105	XG.2001.376-4		Freon 113	ND	mg / Kg	1	0.025		03/29/01
X01105	XG.2001.376-4	75-71-8	Freon 12	ND	mg / Kg	1	0.05		03/29/01
X01105	XG.2001.376-4	74-88-4	Iodomethane	ND	mg / Kg	1	0.025		03/29/01
X01105	XG.2001.376-4	1634-04-4	Methyl t-butyl ether (MTBE)	ND	mg / Kg	1	0.005		03/29/01
X01105	XG.2001.376-4	75-09-2	Methylene chloride	ND	mg / Kg	1	0.05		03/29/01
X01105	XG.2001.376-4	91-20-3	Naphthalene	ND	mg / Kg	1	0.025		03/29/01
X01105	XG.2001.376-4	95-47-6	o-Xylene	ND	mg / Kg	1	0.005		03/29/01
X01105	XG.2001.376-4	108-38-3/106-42	p/m Xylenes	ND	mg / Kg	1	0.01		03/29/01
X01105	XG.2001.376-4	100-42-5	Styrene	ND	mg / Kg	1	0.005		03/29/01
X01105	XG.2001.376-4	156-60-5	t-1,2 Dichloroethene	ND	mg / Kg	1	0.005		03/29/01
X01105	XG.2001.376-4	10061-02-6	t-1,3 Dichloropropene	ND	mg / Kg	1	0.005		03/29/01
X01105	XG.2001.376-4	127-18-4	Tetrachloroethene	ND	mg / Kg	1	0.005		03/29/01
X01105	XG.2001.376-4	108-88-3	Toluene	ND	mg / Kg	1	0.005		03/29/01
X01105	XG.2001.376-4	79-01-6	Trichloroethene	ND	mg / Kg	1	0.005		03/29/01

Certificate of Analysis

t: **CH2MHILL**

Project: **0103365** **160660.02.FF.SA**

X01105	XG.2001.376-4	75-69-4	Trichlorofluoromethane	ND	mg / Kg	1	0.025		03/29/01
X01105	XG.2001.376-4	108-05-4	Vinyl acetate	ND	mg / Kg	1	0.025		03/29/01
X01105	XG.2001.376-4	75-01-4	Vinyl chloride	ND	mg / Kg	1	0.025		03/29/01

Client Sample ID ***ST106 SB34 140'*** Sample Matrix ***SOIL*** Sample Collected ***03/25/01 08:40:00***

QC Group	Run Sequence	CAS #	Analyte	Result	Units	Dilution Factor	Detection Limit	Code	Run Date
0103365-03A		**SW846 5030A/8015A GRO by GC/FID**							
X0194	XG.2001.364-4		Gasoline Range Organics	ND	mg / Kg	1	0.25		03/27/01
0103365-03B		**SW846 ME/8015A Diesel Range Organics by GC/FID**							
X0198	XG.2001.361-4		Diesel Range Organics	ND	mg / Kg	1	25		03/27/01

Client Sample ID ***ST106 SB34 150'*** Sample Matrix ***SOIL*** Sample Collected ***03/25/01 09:45:00***

QC Group	Run Sequence	CAS #	Analyte	Result	Units	Dilution Factor	Detection Limit	Code	Run Date
65-04A		**SW846 5030A/8015A GRO by GC/FID**							
X0194	XG.2001.364-7		Gasoline Range Organics	ND	mg / Kg	1	0.25		03/28/01
0103365-04B		**SW846 ME/8015A Diesel Range Organics by GC/FID**							
X0198	XG.2001.361-5		Diesel Range Organics	ND	mg / Kg	1	25		03/27/01

Client Sample ID ***EQUIP BLANK*** Sample Matrix ***H2O*** Sample Collected ***03/25/01 10:10:00***

QC Group	Run Sequence	CAS #	Analyte	Result	Units	Dilution Factor	Detection Limit	Code	Run Date
0103365-05A		**SW846 5030A/8015A GRO by GC/FID**							
X01117	XG.2001.400-4		Gasoline Range Organics	ND	mg / L	1	0.05		04/06/01
0103365-05B		**SW846 ME/8015A Diesel Range Organics by GC/FID**							
X01119	XG.2001.393-8		Diesel Range Organics	ND	mg / L	1	25		04/05/01
0103365-05C		**SW846 8260A Purgeable VOCs by GC/MS**							
X01108	XG.2001.371-2	75-34-3	1,1 Dichloroethane	ND	ug / L	1	1		03/30/01
X01108	XG.2001.371-2	75-34-3	1,1 Dichloroethene	ND	ug / L	1	1		03/30/01
X01108	XG.2001.371-2	71-55-6	1,1,1 Trichloroethane	ND	ug / L	1	1		03/30/01
X01108	XG.2001.371-2	630-20-6	1,1,1,2 Tetrachloroethane	ND	ug / L	1	1		03/30/01
X01108	XG.2001.371-2	79-00-5	1,1,2 Trichloroethane	ND	ug / L	1	1		03/30/01
X01108	XG.2001.371-2	79-34-5	1,1,2,2 Tetrachloroethane	ND	ug / L	1	1		03/30/01
8	XG.2001.371-2	106-93-4	1,2 Dibromoethane (EDB)	ND	ug / L	1	1		03/30/01

Certificate of Analysis

Client: **CH2MHILL**

Project: **0103365** **160660.02.FF.SA**

X01108	XG.2001.371-2	95-50-1	1,2 Dichlorobenzene	ND	ug / L	1	1		03/30/01
X01108	XG.2001.371-2	107-06-2	1,2 Dichloroethane	ND	ug / L	1	1		03/30/01
X01108	XG.2001.371-2	78-87-5	1,2 Dichloropropane	ND	ug / L	1	1		03/30/01
X01108	XG.2001.371-2	96-18-4	1,2,3 Trichloropropane	ND	ug / L	1	1		03/30/01
X01108	XG.2001.371-2	95-63-6	1,2,4-Trimethylbenzene	ND	ug / L	1	1		03/30/01
X01108	XG.2001.371-2	541-73-1	1,3 Dichlorobenzene	ND	ug / L	1	1		03/30/01
X01108	XG.2001.371-2	108-67-8	1,3,5-Trimethylbenzene	ND	ug / L	1	1		03/30/01
X01108	XG.2001.371-2	764-41-0	1,4 Dichloro-2-butene	ND	ug / L	1	10		03/30/01
X01108	XG.2001.371-2	106-46-7	1,4 Dichlorobenzene	ND	ug / L	1	1		03/30/01
X01108	XG.2001.371-2	78-93-3	2-Butanone (MEK)	ND	ug / L	1	5		03/30/01
X01108	XG.2001.371-2	110-75-8	2-Chloroethylvinylether	ND	ug / L	1	5		03/30/01
X01108	XG.2001.371-2	591-78-6	2-Hexanone (MBK)	ND	ug / L	1	5		03/30/01
X01108	XG.2001.371-2	108-10-1	4-Methyl-2-pentanone (MIBK)	ND	ug / L	1	5		03/30/01
X01108	XG.2001.371-2	67-64-1	Acetone	ND	ug / L	1	10		03/30/01
X01108	XG.2001.371-2	107-02-8	Acrolein	ND	ug / L	1	20		03/30/01
X01108	XG.2001.371-2	107-13-1	Acrylonitrile	ND	ug / L	1	20		03/30/01
X01108	XG.2001.371-2	71-43-2	Benzene	ND	ug / L	1	1		03/30/01
X01108	XG.2001.371-2	75-27-4	Bromodichloromethane	ND	ug / L	1	1		03/30/01
X01108	XG.2001.371-2	75-25-2	Bromoform	ND	ug / L	1	1		03/30/01
X01108	XG.2001.371-2	74-83-9	Bromomethane	ND	ug / L	1	5		03/30/01
X01108	XG.2001.371-2	75-15-0	Carbon disulfide	ND	ug / L	1	5		03/30/01
X01108	XG.2001.371-2	56-23-5	Carbon tetrachloride	ND	ug / L	1	1		03/30/01
X01108	XG.2001.371-2	108-90-7	Chlorobenzene	ND	ug / L	1	1		03/30
X01108	XG.2001.371-2	124-48-1	Chlorodibromomethane	ND	ug / L	1	1		03/3
X01108	XG.2001.371-2	75-00-3	Chloroethane	ND	ug / L	1	5		03/30/01
X01108	XG.2001.371-2	67-66-3	Chloroform	ND	ug / L	1	1		03/30/01
X01108	XG.2001.371-2	74-87-3	Chloromethane	ND	ug / L	1	5		03/30/01
X01108	XG.2001.371-2	156-59-2	cis-1,2 dichloroethene	ND	ug / L	1	1		03/30/01
X01108	XG.2001.371-2	10061-01-5	cis-1,3 dichloropropene	ND	ug / L	1	1		03/30/01
X01108	XG.2001.371-2	74-95-3	Dibromomethane	ND	ug / L	1	1		03/30/01
X01108	XG.2001.371-2	97-63-2	Ethyl methacrylate	ND	ug / L	1	5		03/30/01
X01108	XG.2001.371-2	100-41-4	Ethylbenzene	ND	ug / L	1	1		03/30/01
X01108	XG.2001.371-2		Freon 113	ND	ug / L	1	5		03/30/01
X01108	XG.2001.371-2	75-71-8	Freon 12	ND	ug / L	1	10		03/30/01
X01108	XG.2001.371-2	74-88-4	Iodomethane	ND	ug / L	1	5		03/30/01
X01108	XG.2001.371-2	1634-04-4	Methyl t-butyl ether (MTBE)	ND	ug / L	1	1		03/30/01
X01108	XG.2001.371-2	75-09-2	Methylene chloride	ND	ug / L	1	10		03/30/01
X01108	XG.2001.371-2	91-20-3	Naphthalene	ND	ug / L	1	5		03/30/01
X01108	XG.2001.371-2	95-47-6	o-Xylene	ND	ug / L	1	1		03/30/01
X01108	XG.2001.371-2	108-38-3/106-42	p/m Xylenes	ND	ug / L	1	2		03/30/01
X01108	XG.2001.371-2	100-42-5	Styrene	ND	ug / L	1	1		03/30/01
X01108	XG.2001.371-2	156-60-5	t-1,2 Dichloroethene	ND	ug / L	1	1		03/30/01
X01108	XG.2001.371-2	10061-02-6	t-1,3 Dichloropropene	ND	ug / L	1	1		03/30/01
X01108	XG.2001.371-2	127-18-4	Tetrachloroethene	ND	ug / L	1	1		03/30/01
X01108	XG.2001.371-2	108-88-3	Toluene	1.3	ug / L	1	1		03/30/01
X01108	XG.2001.371-2	79-01-6	Trichloroethene	ND	ug / L	1	1		03/30/01
X01108	XG.2001.371-2	75-69-4	Trichlorofluoromethane	ND	ug / L	1	5		03/30/01
X01108	XG.2001.371-2	108-05-4	Vinyl acetate	ND	ug / L	1	5		03/30

Certificate of Analysis

Client: **CH2MHILL**

Project: **0103365** **160660.02.FF.SA**

X01108	XG.2001.371-2	75-01-4	Vinyl chloride	ND	ug / L	1	5		03/30/01
0103365-05D		**SW846 3510B/8270B SVOCs by GC/MS**							
X0199	XG.2001.374-2	120-82-1	1,2,4-Trichlorobenzene	ND	ug / L	1	1		03/30/01
X0199	XG.2001.374-2	95-50-1	1,2-Dichlorobenzene	ND	ug / L	1	1		03/30/01
X0199	XG.2001.374-2	541-73-1	1,3-Dichlorobenzene	ND	ug / L	1	1		03/30/01
X0199	XG.2001.374-2	106-46-7	1,4-Dichlorobenzene	ND	ug / L	1	1		03/30/01
X0199	XG.2001.374-2	90-12-0	1-Methylnaphthalene	ND	ug / L	1	1		03/30/01
X0199	XG.2001.374-2	58-90-2	2,3,4,6-Tetrachlorophenol	ND	ug / L	1	5		03/30/01
X0199	XG.2001.374-2	95-95-4	2,4,5-Trichlorophenol	ND	ug / L	1	5		03/30/01
X0199	XG.2001.374-2	88-06-2	2,4,6-Trichlorophenol	ND	ug / L	1	5		03/30/01
X0199	XG.2001.374-2	120-83-2	2,4-Dichlorophenol	ND	ug / L	1	5		03/30/01
X0199	XG.2001.374-2	105-67-9	2,4-Dimethylphenol	ND	ug / L	1	1		03/30/01
X0199	XG.2001.374-2	51-28-5	2,4-Dinitrophenol	ND	ug / L	1	10		03/30/01
X0199	XG.2001.374-2	121-14-2	2,4-Dinitrotoluene	ND	ug / L	1	5		03/30/01
X0199	XG.2001.374-2	606-20-2	2,6-Dinitrotoluene	ND	ug / L	1	5		03/30/01
X0199	XG.2001.374-2	91-58-7	2-Chloronaphthalene	ND	ug / L	1	1		03/30/01
X0199	XG.2001.374-2	95-57-8	2-Chlorophenol	ND	ug / L	1	1		03/30/01
X0199	XG.2001.374-2	91-57-6	2-Methylnaphthalene	ND	ug / L	1	1		03/30/01
X0199	XG.2001.374-2	95-48-7	2-Methylphenol	ND	ug / L	1	1		03/30/01
X0199	XG.2001.374-2	88-74-4	2-Nitroaniline	ND	ug / L	1	5		03/30/01
X0199	XG.2001.374-2	88-75-5	2-Nitrophenol	ND	ug / L	1	5		03/30/01
[illegible]	XG.2001.374-2		3+4 Methylphenol	ND	ug / L	1	1		03/30/01
[illegible]	XG.2001.374-2	91-94-1	3,3-Dichlorobenzidine	ND	ug / L	1	10		03/30/01
X0199	XG.2001.374-2	99-09-2	3-Nitroaniline	ND	ug / L	1	5		03/30/01
X0199	XG.2001.374-2	534-52-1	4,6-Dinitro-2-methylphenol	ND	ug / L	1	10		03/30/01
X0199	XG.2001.374-2	101-55-3	4-Bromophenyl-phenylether	ND	ug / L	1	1		03/30/01
X0199	XG.2001.374-2	59-50-7	4-Chloro-3-methylphenol	ND	ug / L	1	5		03/30/01
X0199	XG.2001.374-2	106-47-8	4-Chloroaniline	ND	ug / L	1	5		03/30/01
X0199	XG.2001.374-2	7005-72-3	4-Chlorophenyl-phenylether	ND	ug / L	1	1		03/30/01
X0199	XG.2001.374-2	100-01-6	4-Nitroaniline	ND	ug / L	1	5		03/30/01
X0199	XG.2001.374-2	100-02-7	4-Nitrophenol	ND	ug / L	1	10		03/30/01
X0199	XG.2001.374-2	83-32-9	Acenaphthene	ND	ug / L	1	1		03/30/01
X0199	XG.2001.374-2	208-96-8	Acenaphthylene	ND	ug / L	1	1		03/30/01
X0199	XG.2001.374-2	62-53-3	Aniline	ND	ug / L	1	10		03/30/01
X0199	XG.2001.374-2	120-12-7	Anthracene	ND	ug / L	1	1		03/30/01
X0199	XG.2001.374-2		Azobenzene&1,2-Diphenylhydrazine	ND	ug / L	1	1		03/30/01
X0199	XG.2001.374-2	56-55-3	Benzo (a) anthracene	ND	ug / L	1	1		03/30/01
X0199	XG.2001.374-2	50-32-8	Benzo(a)pyrene	ND	ug / L	1	1		03/30/01
X0199	XG.2001.374-2		Benzo(b & k)fluoranthene	ND	ug / L	1	1		03/30/01
X0199	XG.2001.374-2	191-24-2	Benzo(g,h,i)perylene	ND	ug / L	1	1		03/30/01
X0199	XG.2001.374-2	64-85-0	Benzoic acid	ND	ug / L	1	25		03/30/01
X0199	XG.2001.374-2	100-51-6	Benzyl alcohol	ND	ug / L	1	5		03/30/01
X0199	XG.2001.374-2	111-44-4	bis (2-Chloroethyl) ether	ND	ug / L	1	1		03/30/01
X0199	XG.2001.374-2	111-91-1	bis(2-Chloroethoxy)methane	ND	ug / L	1	1		03/30/01
X0199	XG.2001.374-2	108-60-1	bis(2-Chloroisopropyl)ether	ND	ug / L	1	1		03/30/01
X0199	XG.2001.374-2	117-81-7	bis(2-Ethylhexyl)phthalate	ND	ug / L	1	5		03/30/01
[illegible]	XG.2001.374-2	85-68-7	Butylbenzylphthalate	ND	ug / L	1	1		03/30/01

Certificate of Analysis

Client: **CH2MHILL**

Project: **0103365** **160660.02.FF.SA**

X0199	XG.2001.374-2	218-01-9	Chrysene	ND	ug / L	1	1		03/30/01
X0199	XG.2001.374-2	84-74-2	di-n-Butylphthalate	ND	ug / L	1	1		03/30/01
X0199	XG.2001.374-2	117-84-0	di-n-Octylpthalate	ND	ug / L	1	1		03/30/01
X0199	XG.2001.374-2	53-70-3	Dibenz(a,h)anthracene	ND	ug / L	1	1		03/30/01
X0199	XG.2001.374-2	132-64-9	Dibenzofuran	ND	ug / L	1	1		03/30/01
X0199	XG.2001.374-2	84-66-2	Diethylphthalate	ND	ug / L	1	1		03/30/01
X0199	XG.2001.374-2	131-11-3	Dimethylphthalate	ND	ug / L	1	1		03/30/01
X0199	XG.2001.374-2	206-44-0	Fluoranthene	ND	ug / L	1	1		03/30/01
X0199	XG.2001.374-2	86737	Fluorene	ND	ug / L	1	1		03/30/01
X0199	XG.2001.374-2	118-74-1	Hexachlorobenzene	ND	ug / L	1	10		03/30/01
X0199	XG.2001.374-2	87-68-3	Hexachlorobutadiene	ND	ug / L	1	10		03/30/01
X0199	XG.2001.374-2	77-47-4	Hexachlorocyclopentadiene	ND	ug / L	1	10		03/30/01
X0199	XG.2001.374-2	67-72-1	Hexachloroethane	ND	ug / L	1	5		03/30/01
X0199	XG.2001.374-2	193-39-5	Indeno(1,2,3-cd)pyrene	ND	ug / L	1	1		03/30/01
X0199	XG.2001.374-2	78-59-1	Isophorone	ND	ug / L	1	1		03/30/01
X0199	XG.2001.374-2	621-64-7	n-Nitroso-di-n-propylamine	ND	ug / L	1	1		03/30/01
X0199	XG.2001.374-2	62-75-9	n-Nitroso-dimethyl-amine	ND	ug / L	1	10		03/30/01
X0199	XG.2001.374-2	86-30-6	n-Nitrosodiphenylamine	ND	ug / L	1	1		03/30/01
X0199	XG.2001.374-2	91-20-3	Naphthalene	ND	ug / L	1	1		03/30/01
X0199	XG.2001.374-2	98-95-3	Nitrobenzene	ND	ug / L	1	1		03/30/01
X0199	XG.2001.374-2	87-86-5	Pentachlorophenol	ND	ug / L	1	10		03/30/01
X0199	XG.2001.374-2	85-01-8	Phenanthrene	ND	ug / L	1	1		03/30/01
X0199	XG.2001.374-2	108-95-2	Phenol	ND	ug / L	1	10		03/30/
X0199	XG.2001.374-2	129-00-0	Pyrene	ND	ug / L	1	1		03/3
X0199	XG.2001.374-2	110-86-1	Pyridine	ND	ug / L	1	10		03/30/01

Client Sample ID ***TRIP BLANK*** Sample Matrix ***H2O*** Sample Collected ***03/2:/01 10:3:00***

QC Group	Run Sequence	CAS #	Analyte	Result	Units	Dilution Factor	Detection Limit	Code	Run Date
0103365-06A		**SW846 8260A Purgeable VOCs by GC/MS**							
X01108	XG.2001.371-3	75-34-3	1,1 Dichloroethane	ND	ug / L	1	1		03/30/01
X01108	XG.2001.371-3	75-34-3	1,1 Dichloroethene	ND	ug / L	1	1		03/30/01
X01108	XG.2001.371-3	71-55-6	1,1,1 Trichloroethane	ND	ug / L	1	1		03/30/01
X01108	XG.2001.371-3	630-20-6	1,1,1,2 Tetrachloroethane	ND	ug / L	1	1		03/30/01
X01108	XG.2001.371-3	79-00-5	1,1,2 Trichloroethane	ND	ug / L	1	1		03/30/01
X01108	XG.2001.371-3	79-34-5	1,1,2,2 Tetrachloroethane	ND	ug / L	1	1		03/30/01
X01108	XG.2001.371-3	106-93-4	1,2 Dibromoethane (EDB)	ND	ug / L	1	1		03/30/01
X01108	XG.2001.371-3	95-50-1	1,2 Dichlorobenzene	ND	ug / L	1	1		03/30/01
X01108	XG.2001.371-3	107-06-2	1,2 Dichloroethane	ND	ug / L	1	1		03/30/01
X01108	XG.2001.371-3	78-87-5	1,2 Dichloropropane	ND	ug / L	1	1		03/30/01
X01108	XG.2001.371-3	96-18-4	1,2,3 Trichloropropane	ND	ug / L	1	1		03/30/01
X01108	XG.2001.371-3	95-63-6	1,2,4-Trimethylbenzene	ND	ug / L	1	1		03/30/01
X01108	XG.2001.371-3	541-73-1	1,3 Dichlorobenzene	ND	ug / L	1	1		03/30/01
X01108	XG.2001.371-3	108-67-8	1,3,5-Trimethylbenzene	ND	ug / L	1	1		03/30/01
X01108	XG.2001.371-3	764-41-0	1,4 Dichloro-2-butene	ND	ug / L	1	10		03/30/01
X01108	XG.2001.371-3	106-46-7	1,4 Dichlorobenzene	ND	ug / L	1	1		03/3

Certificate of Analysis

t: **CH2MHILL**

Project: **0103365** **160660.02.FF.SA**

X01108	XG.2001.371-3	78-93-3	2-Butanone (MEK)	ND	ug / L	1	5	03/30/01
X01108	XG.2001.371-3	110-75-8	2-Chloroethylvinylether	ND	ug / L	1	5	03/30/01
X01108	XG.2001.371-3	591-78-6	2-Hexanone (MBK)	ND	ug / L	1	5	03/30/01
X01108	XG.2001.371-3	108-10-1	4-Methyl-2-pentanone (MIBK)	ND	ug / L	1	5	03/30/01
X01108	XG.2001.371-3	67-64-1	Acetone	ND	ug / L	1	10	03/30/01
X01108	XG.2001.371-3	107-02-8	Acrolein	ND	ug / L	1	20	03/30/01
X01108	XG.2001.371-3	107-13-1	Acrylonitrile	ND	ug / L	1	20	03/30/01
X01108	XG.2001.371-3	71-43-2	Benzene	ND	ug / L	1	1	03/30/01
X01108	XG.2001.371-3	75-27-4	Bromodichloromethane	ND	ug / L	1	1	03/30/01
X01108	XG.2001.371-3	75-25-2	Bromoform	ND	ug / L	1	1	03/30/01
X01108	XG.2001.371-3	74-83-9	Bromomethane	ND	ug / L	1	5	03/30/01
X01108	XG.2001.371-3	75-15-0	Carbon disulfide	ND	ug / L	1	5	03/30/01
X01108	XG.2001.371-3	56-23-5	Carbon tetrachloride	ND	ug / L	1	1	03/30/01
X01108	XG.2001.371-3	108-90-7	Chlorobenzene	ND	ug / L	1	1	03/30/01
X01108	XG.2001.371-3	124-48-1	Chlorodibromomethane	ND	ug / L	1	1	03/30/01
X01108	XG.2001.371-3	75-00-3	Chloroethane	ND	ug / L	1	5	03/30/01
X01108	XG.2001.371-3	67-66-3	Chloroform	ND	ug / L	1	1	03/30/01
X01108	XG.2001.371-3	74-87-3	Chloromethane	ND	ug / L	1	5	03/30/01
X01108	XG.2001.371-3	156-59-2	cis-1,2 dichloroethene	ND	ug / L	1	1	03/30/01
X01108	XG.2001.371-3	10061-01-5	cis-1,3 dichloropropene	ND	ug / L	1	1	03/30/01
X01108	XG.2001.371-3	74-95-3	Dibromomethane	ND	ug / L	1	1	03/30/01
X01108	XG.2001.371-3	97-63-2	Ethyl methacrylate	ND	ug / L	1	5	03/30/01
[illegible]3	XG.2001.371-3	100-41-4	Ethylbenzene	ND	ug / L	1	1	03/30/01
[illegible]8	XG.2001.371-3		Freon 113	ND	ug / L	1	5	03/30/01
X01108	XG.2001.371-3	75-71-8	Freon 12	ND	ug / L	1	10	03/30/01
X01108	XG.2001.371-3	74-88-4	Iodomethane	ND	ug / L	1	5	03/30/01
X01108	XG.2001.371-3	1634-04-4	Methyl t-butyl ether (MTBE)	ND	ug / L	1	1	03/30/01
X01108	XG.2001.371-3	75-09-2	Methylene chloride	ND	ug / L	1	10	03/30/01
X01108	XG.2001.371-3	91-20-3	Naphthalene	ND	ug / L	1	5	03/30/01
X01108	XG.2001.371-3	95-47-6	o-Xylene	ND	ug / L	1	1	03/30/01
X01108	XG.2001.371-3	108-38-3/106-42	p/m Xylenes	ND	ug / L	1	2	03/30/01
X01108	XG.2001.371-3	100-42-5	Styrene	ND	ug / L	1	1	03/30/01
X01108	XG.2001.371-3	156-60-5	t-1,2 Dichloroethene	ND	ug / L	1	1	03/30/01
X01108	XG.2001.371-3	10061-02-6	t-1,3 Dichloropropene	ND	ug / L	1	1	03/30/01
X01108	XG.2001.371-3	127-18-4	Tetrachloroethene	ND	ug / L	1	1	03/30/01
X01108	XG.2001.371-3	108-88-3	Toluene	ND	ug / L	1	1	03/30/01
X01108	XG.2001.371-3	79-01-6	Trichloroethene	ND	ug / L	1	1	03/30/01
X01108	XG.2001.371-3	75-69-4	Trichlorofluoromethane	ND	ug / L	1	5	03/30/01
X01108	XG.2001.371-3	108-05-4	Vinyl acetate	ND	ug / L	1	5	03/30/01
X01108	XG.2001.371-3	75-01-4	Vinyl chloride	ND	ug / L	1	5	03/30/01

**** Sample specific Detection Limit is determined by multiplying the sample Dilution Factor by the listed Reporting Detection Limit. ****

**** ND = Not detected: less than the sample specific Detection Limit. Results relate only to the items tested. ****

Assaigai Analytical Laboratories, Inc.

Quality Control Summary

Client: **CH2MHILL**

Project: **0103365** **160660.02.FF.SA**

Explanation of codes

D *Not applicable due to sample diluti*

L *Not applicable due to MDL proximi*

QC Type **LCS: Lab Control Spike** QC Matrix **SOLID**

QC Group	Run Sequence	CAS #	Analyte	Result	Units	Dilution Factor	Detection Limit	Code	Run Date
X01105-007		**SW846 8260A Purgeable VOCs by GC/MS**							
X01105	XG.2001.376-7	75-34-3	1,1 Dichloroethene	113	% Recovery	1	NA		03/29/0
X01105	XG.2001.376-7	106-46-7	1,4 Dichlorobenzene	104	% Recovery	1	NA		03/29/0
X01105	XG.2001.376-7	71-43-2	Benzene	111	% Recovery	1	NA		03/29/0
X01105	XG.2001.376-7	108-90-7	Chlorobenzene	108	% Recovery	1	NA		03/29/0
X01105	XG.2001.376-7	108-88-3	Toluene	116	% Recovery	1	NA		03/29/0
X01105	XG.2001.376-7	79-01-6	Trichloroethene	108	% Recovery	1	NA		03/29/0
X0194-002		**SW846 5030A/8015A GRO by GC/FID**							
X0194	XG.2001.325-2		Gasoline Range Organics	110	% Recovery	1	NA		03/16/0
X0198-002		**SW846 ME/8015A Diesel Range Organics by GC/FID**							
X0198	XG.2001.334-2		Diesel Range Organics	88	% Recovery	1	NA		03/20/0

QC Type **LCSD: Lab Control Spike Duplicate Accuracy** QC Matrix **SOLID**

QC Group	Run Sequence	CAS #	Analyte	Result	Units	Dilution Factor	Detection Limit	Code	Run Date
X01105-008		**SW846 8260A Purgeable VOCs by GC/MS**							
X01105	XG.2001.376-8	75-34-3	1,1 Dichloroethene	112	% Recovery	1	NA		03/29/0
X01105	XG.2001.376-8	106-46-7	1,4 Dichlorobenzene	106	% Recovery	1	NA		03/29/0
X01105	XG.2001.376-8	71-43-2	Benzene	112	% Recovery	1	NA		03/29/0
X01105	XG.2001.376-8	108-90-7	Chlorobenzene	106	% Recovery	1	NA		03/29/0
X01105	XG.2001.376-8	108-88-3	Toluene	112	% Recovery	1	NA		03/29/0
X01105	XG.2001.376-8	79-01-6	Trichloroethene	107	% Recovery	1	NA		03/29/0
X0194-003		**SW846 5030A/8015A GRO by GC/FID**							
X0194	XG.2001.325-3		Gasoline Range Organics	110	% Recovery	1	NA		03/16/0
X0198-003		**SW846 ME/8015A Diesel Range Organics by GC/FID**							
X0198	XG.2001.334-3		Diesel Range Organics	94	% Recovery	1	NA		03/20/0

QC Type **LCSD: Lab Control Spike Duplicate Precision** QC Matrix **SOLID**

QC Group	Run Sequence	CAS #	Analyte	Result	Units	Dilution Factor	Detection Limit	Code	Run Date
X01105-008		**SW846 8260A Purgeable VOCs by GC/MS**							
X01105	XG.2001.376-8	75-34-3	1,1 Dichloroethene	< 1	RPD	1	NA		03/29/0
X01105	XG.2001.376-8	106-46-7	1,4 Dichlorobenzene	2	RPD	1	NA		03/29/0
X01105	XG.2001.376-8	71-43-2	Benzene	1	RPD	1	NA		03/29/0
X01105	XG.2001.376-8	108-90-7	Chlorobenzene	1	RPD	1	NA		03/29/0
X01105	XG.2001.376-8	108-88-3	Toluene	3	RPD	1	NA		03/29
X01105	XG.2001.376-8	79-01-6	Trichloroethene	< 1	RPD	1	NA		03/29/

Quality Control Summary

Explanation of codes

D	*Not applicable due to sample dilution*
L	*Not applicable due to MDL proximity*

Client: **CH2MHILL**

Project: **0103365** **160660.02.FF.SA**

X0194-003		SW846 5030A/8015A GRO by GC/FID							
X0194	XG.2001.325-3		Gasoline Range Organics	< 1	RPD	1	NA		03/16/01
X0198-003		SW846 ME/8015A Diesel Range Organics by GC/FID							
X0198	XG.2001.334-3		Diesel Range Organics	6	RPD	1	NA		03/20/01

QC Type **MB: Method Blank** QC Matrix **SOLID**

QC Group	Run Sequence	CAS #	Analyte	Result	Units	Dilution Factor	Detection Limit	Code	Run Date
X01105-001		SW846 8260A Purgeable VOCs by GC/MS							
X01105	XG.2001.376-1	75-34-3	1,1 Dichloroethane	ND	mg / Kg	1	0.005		03/28/01
X01105	XG.2001.376-1	75-34-3	1,1 Dichloroethene	ND	mg / Kg	1	0.005		03/28/01
X01105	XG.2001.376-1	71-55-6	1,1,1 Trichloroethane	ND	mg / Kg	1	0.005		03/28/01
X01105	XG.2001.376-1	630-20-6	1,1,1,2 Tetrachloroethane	ND	mg / Kg	1	0.005		03/28/01
X01105	XG.2001.376-1	79-00-5	1,1,2 Trichloroethane	ND	mg / Kg	1	0.005		03/28/01
X01105	XG.2001.376-1	79-34-5	1,1,2,2 Tetrachloroethane	ND	mg / Kg	1	0.005		03/28/01
X01105	XG.2001.376-1	106-93-4	1,2 Dibromoethane (EDB)	ND	mg / Kg	1	0.005		03/28/01
X01105	XG.2001.376-1	95-50-1	1,2 Dichlorobenzene	ND	mg / Kg	1	0.005		03/28/01
X01105	XG.2001.376-1	107-06-2	1,2 Dichloroethane	ND	mg / Kg	1	0.005		03/28/01
X01105	XG.2001.376-1	78-87-5	1,2 Dichloropropane	ND	mg / Kg	1	0.005		03/28/01
[illegible]5	XG.2001.376-1	96-18-4	1,2,3 Trichloropropane	ND	mg / Kg	1	0.005		03/28/01
[illegible]5	XG.2001.376-1	95-63-6	1,2,4-Trimethylbenzene	ND	mg / Kg	1	0.005		03/28/01
X01105	XG.2001.376-1	541-73-1	1,3 Dichlorobenzene	ND	mg / Kg	1	0.005		03/28/01
X01105	XG.2001.376-1	108-67-8	1,3,5-Trimethylbenzene	ND	mg / Kg	1	0.005		03/28/01
X01105	XG.2001.376-1	764-41-0	1,4 Dichloro-2-butene	ND	mg / Kg	1	0.05		03/28/01
X01105	XG.2001.376-1	106-46-7	1,4 Dichlorobenzene	ND	mg / Kg	1	0.005		03/28/01
X01105	XG.2001.376-1	78-93-3	2-Butanone (MEK)	ND	mg / Kg	1	0.025		03/28/01
X01105	XG.2001.376-1	110-75-8	2-Chloroethylvinylether	ND	mg / Kg	1	0.025		03/28/01
X01105	XG.2001.376-1	591-78-6	2-Hexanone (MBK)	ND	mg / Kg	1	0.025		03/28/01
X01105	XG.2001.376-1	108-10-1	4-Methyl-2-pentanone (MIBK)	ND	mg / Kg	1	0.025		03/28/01
X01105	XG.2001.376-1	67-64-1	Acetone	ND	mg / Kg	1	0.05		03/28/01
X01105	XG.2001.376-1	107-02-8	Acrolein	ND	mg / Kg	1	0.1		03/28/01
X01105	XG.2001.376-1	107-13-1	Acrylonitrile	ND	mg / Kg	1	0.1		03/28/01
X01105	XG.2001.376-1	71-43-2	Benzene	ND	mg / Kg	1	0.005		03/28/01
X01105	XG.2001.376-1	75-27-4	Bromodichloromethane	ND	mg / Kg	1	0.005		03/28/01
X01105	XG.2001.376-1	75-25-2	Bromoform	ND	mg / Kg	1	0.005		03/28/01
X01105	XG.2001.376-1	74-83-9	Bromomethane	ND	mg / Kg	1	0.025		03/28/01
X01105	XG.2001.376-1	75-15-0	Carbon disulfide	ND	mg / Kg	1	0.025		03/28/01
X01105	XG.2001.376-1	56-23-5	Carbon tetrachloride	ND	mg / Kg	1	0.005		03/28/01
X01105	XG.2001.376-1	108-90-7	Chlorobenzene	ND	mg / Kg	1	0.005		03/28/01
X01105	XG.2001.376-1	124-48-1	Chlorodibromomethane	ND	mg / Kg	1	0.005		03/28/01
X01105	XG.2001.376-1	75-00-3	Chloroethane	ND	mg / Kg	1	0.025		03/28/01
X01105	XG.2001.376-1	67-66-3	Chloroform	ND	mg / Kg	1	0.005		03/28/01
X01105	XG.2001.376-1	74-87-3	Chloromethane	ND	mg / Kg	1	0.025		03/28/01
X01105	XG.2001.376-1	156-59-2	cis-1,2 dichloroethene	ND	mg / Kg	1	0.005		03/28/01
X01105	XG.2001.376-1	10061-01-5	cis-1,3 dichloropropene	ND	mg / Kg	1	0.005		03/28/01
[illegible]05	XG.2001.376-1	74-95-3	Dibromomethane	ND	mg / Kg	1	0.005		03/28/01
[illegible]05	XG.2001.376-1	97-63-2	Ethyl methacrylate	ND	mg / Kg	1	0.025		03/28/01

Quality Control Summary

Client: **CH2MHILL**

Project: **0103365** **160660.02.FF.SA**

Explanation of codes

D *Not applicable due to sample diluti*

L *Not applicable due to MDL proxim*

X01105	XG.2001.376-1	100-41-4	Ethylbenzene	ND	mg / Kg	1	0.005	03/28/0
X01105	XG.2001.376-1		Freon 113	ND	mg / Kg	1	0.025	03/28/0
X01105	XG.2001.376-1	75-71-8	Freon 12	ND	mg / Kg	1	0.05	03/28/0
X01105	XG.2001.376-1	74-88-4	Iodomethane	ND	mg / Kg	1	0.025	03/28/0
X01105	XG.2001.376-1	1634-04-4	Methyl t-butyl ether (MTBE)	ND	mg / Kg	1	0.005	03/28/0
X01105	XG.2001.376-1	75-09-2	Methylene chloride	ND	mg / Kg	1	0.05	03/28/0
X01105	XG.2001.376-1	91-20-3	Naphthalene	ND	mg / Kg	1	0.025	03/28/0
X01105	XG.2001.376-1	95-47-6	o-Xylene	ND	mg / Kg	1	0.005	03/28/0
X01105	XG.2001.376-1	108-38-3/106-42	p/m Xylenes	ND	mg / Kg	1	0.01	03/28/0
X01105	XG.2001.376-1	100-42-5	Styrene	ND	mg / Kg	1	0.005	03/28/0
X01105	XG.2001.376-1	156-60-5	t-1,2 Dichloroethene	ND	mg / Kg	1	0.005	03/28/0
X01105	XG.2001.376-1	10061-02-6	t-1,3 Dichloropropene	ND	mg / Kg	1	0.005	03/28/0
X01105	XG.2001.376-1	127-18-4	Tetrachloroethene	ND	mg / Kg	1	0.005	03/28/0
X01105	XG.2001.376-1	108-88-3	Toluene	ND	mg / Kg	1	0.005	03/28/0
X01105	XG.2001.376-1	79-01-6	Trichloroethene	ND	mg / Kg	1	0.005	03/28/0
X01105	XG.2001.376-1	75-69-4	Trichlorofluoromethane	ND	mg / Kg	1	0.025	03/28/0
X01105	XG.2001.376-1	108-05-4	Vinyl acetate	ND	mg / Kg	1	0.025	03/28/0
X01105	XG.2001.376-1	75-01-4	Vinyl chloride	ND	mg / Kg	1	0.025	03/28/0
X01105-009		**SW846 8260A Purgeable VOCs by GC/MS**						
X01105	XG.2001.376-9	75-34-3	1,1 Dichloroethane	ND	mg / Kg	1	0.005	03/29/0
X01105	XG.2001.376-9	75-34-3	1,1 Dichloroethene	ND	mg / Kg	1	0.005	03/29/0
X01105	XG.2001.376-9	71-55-6	1,1,1 Trichloroethane	ND	mg / Kg	1	0.005	03/29/0
X01105	XG.2001.376-9	630-20-6	1,1,1,2 Tetrachloroethane	ND	mg / Kg	1	0.005	03/29
X01105	XG.2001.376-9	79-00-5	1,1,2 Trichloroethane	ND	mg / Kg	1	0.005	03/29
X01105	XG.2001.376-9	79-34-5	1,1,2,2 Tetrachloroethane	ND	mg / Kg	1	0.005	03/29/0
X01105	XG.2001.376-9	106-93-4	1,2 Dibromoethane (EDB)	ND	mg / Kg	1	0.005	03/29/0
X01105	XG.2001.376-9	95-50-1	1,2 Dichlorobenzene	ND	mg / Kg	1	0.005	03/29/0
X01105	XG.2001.376-9	107-06-2	1,2 Dichloroethane	ND	mg / Kg	1	0.005	03/29/0
X01105	XG.2001.376-9	78-87-5	1,2 Dichloropropane	ND	mg / Kg	1	0.005	03/29/0
X01105	XG.2001.376-9	96-18-4	1,2,3 Trichloropropane	ND	mg / Kg	1	0.005	03/29/0
X01105	XG.2001.376-9	95-63-6	1,2,4-Trimethylbenzene	ND	mg / Kg	1	0.005	03/29/0
X01105	XG.2001.376-9	541-73-1	1,3 Dichlorobenzene	ND	mg / Kg	1	0.005	03/29/0
X01105	XG.2001.376-9	108-67-8	1,3,5-Trimethylbenzene	ND	mg / Kg	1	0.005	03/29/0
X01105	XG.2001.376-9	764-41-0	1,4 Dichloro-2-butene	ND	mg / Kg	1	0.05	03/29/0
X01105	XG.2001.376-9	106-46-7	1,4 Dichlorobenzene	ND	mg / Kg	1	0.005	03/29/0
X01105	XG.2001.376-9	78-93-3	2-Butanone (MEK)	ND	mg / Kg	1	0.025	03/29/0
X01105	XG.2001.376-9	110-75-8	2-Chloroethylvinylether	ND	mg / Kg	1	0.025	03/29/0
X01105	XG.2001.376-9	591-78-6	2-Hexanone (MBK)	ND	mg / Kg	1	0.025	03/29/0
X01105	XG.2001.376-9	108-10-1	4-Methyl-2-pentanone (MIBK)	ND	mg / Kg	1	0.025	03/29/0
X01105	XG.2001.376-9	67-64-1	Acetone	ND	mg / Kg	1	0.05	03/29/0
X01105	XG.2001.376-9	107-02-8	Acrolein	ND	mg / Kg	1	0.1	03/29/0
X01105	XG.2001.376-9	107-13-1	Acrylonitrile	ND	mg / Kg	1	0.1	03/29/0
X01105	XG.2001.376-9	71-43-2	Benzene	ND	mg / Kg	1	0.005	03/29/0
X01105	XG.2001.376-9	75-27-4	Bromodichloromethane	ND	mg / Kg	1	0.005	03/29/0
X01105	XG.2001.376-9	75-25-2	Bromoform	ND	mg / Kg	1	0.005	03/29/0
X01105	XG.2001.376-9	74-83-9	Bromomethane	ND	mg / Kg	1	0.025	03/29/0
X01105	XG.2001.376-9	75-15-0	Carbon disulfide	ND	mg / Kg	1	0.025	03/29/0
X01105	XG.2001.376-9	56-23-5	Carbon tetrachloride	ND	mg / Kg	1	0.005	03/29/0
X01105	XG.2001.376-9	108-90-7	Chlorobenzene	ND	mg / Kg	1	0.005	03/29

Quality Control Summary

Client: **CH2MHILL**

Project: **0103365** **160660.02.FF.SA**

Explanation of codes

D	*Not applicable due to sample dilution*
L	*Not applicable due to MDL proximity*

X01105	XG.2001.376-9	124-48-1	Chlorodibromomethane	ND	mg / Kg	1	0.005	03/29/01
X01105	XG.2001.376-9	75-00-3	Chloroethane	ND	mg / Kg	1	0.025	03/29/01
X01105	XG.2001.376-9	67-66-3	Chloroform	ND	mg / Kg	1	0.005	03/29/01
X01105	XG.2001.376-9	74-87-3	Chloromethane	ND	mg / Kg	1	0.025	03/29/01
X01105	XG.2001.376-9	156-59-2	cis-1,2 dichloroethene	ND	mg / Kg	1	0.005	03/29/01
X01105	XG.2001.376-9	10061-01-5	cis-1,3 dichloropropene	ND	mg / Kg	1	0.005	03/29/01
X01105	XG.2001.376-9	74-95-3	Dibromomethane	ND	mg / Kg	1	0.005	03/29/01
X01105	XG.2001.376-9	97-63-2	Ethyl methacrylate	ND	mg / Kg	1	0.025	03/29/01
X01105	XG.2001.376-9	100-41-4	Ethylbenzene	ND	mg / Kg	1	0.005	03/29/01
X01105	XG.2001.376-9		Freon 113	ND	mg / Kg	1	0.025	03/29/01
X01105	XG.2001.376-9	75-71-8	Freon 12	ND	mg / Kg	1	0.05	03/29/01
X01105	XG.2001.376-9	74-88-4	Iodomethane	ND	mg / Kg	1	0.025	03/29/01
X01105	XG.2001.376-9	1634-04-4	Methyl t-butyl ether (MTBE)	ND	mg / Kg	1	0.005	03/29/01
X01105	XG.2001.376-9	75-09-2	Methylene chloride	ND	mg / Kg	1	0.05	03/29/01
X01105	XG.2001.376-9	91-20-3	Naphthalene	ND	mg / Kg	1	0.025	03/29/01
X01105	XG.2001.376-9	95-47-6	o-Xylene	ND	mg / Kg	1	0.005	03/29/01
X01105	XG.2001.376-9	108-38-3/106-42	p/m Xylenes	ND	mg / Kg	1	0.01	03/29/01
X01105	XG.2001.376-9	100-42-5	Styrene	ND	mg / Kg	1	0.005	03/29/01
X01105	XG.2001.376-9	156-60-5	t-1,2 Dichloroethene	ND	mg / Kg	1	0.005	03/29/01
X01105	XG.2001.376-9	10061-02-6	t-1,3 Dichloropropene	ND	mg / Kg	1	0.005	03/29/01
X01105	XG.2001.376-9	127-18-4	Tetrachloroethene	ND	mg / Kg	1	0.005	03/29/01
X01105	XG.2001.376-9	108-88-3	Toluene	ND	mg / Kg	1	0.005	03/29/01
X01105	XG.2001.376-9	79-01-6	Trichloroethene	ND	mg / Kg	1	0.005	03/29/01
X01105	XG.2001.376-9	75-69-4	Trichlorofluoromethane	ND	mg / Kg	1	0.025	03/29/01
X01105	XG.2001.376-9	108-05-4	Vinyl acetate	ND	mg / Kg	1	0.025	03/29/01
X01105	XG.2001.376-9	75-01-4	Vinyl chloride	ND	mg / Kg	1	0.025	03/29/01
X01105-018		**SW846 8260A Purgeable VOCs by GC/MS**						
X01105	XG.2001.376-16	75-34-3	1,1 Dichloroethane	ND	mg / Kg	1	0.005	03/30/01
X01105	XG.2001.376-16	75-34-3	1,1 Dichloroethene	ND	mg / Kg	1	0.005	03/30/01
X01105	XG.2001.376-16	71-55-6	1,1,1 Trichloroethane	ND	mg / Kg	1	0.005	03/30/01
X01105	XG.2001.376-16	630-20-6	1,1,1,2 Tetrachloroethane	ND	mg / Kg	1	0.005	03/30/01
X01105	XG.2001.376-16	79-00-5	1,1,2 Trichloroethane	ND	mg / Kg	1	0.005	03/30/01
X01105	XG.2001.376-16	79-34-5	1,1,2,2 Tetrachloroethane	ND	mg / Kg	1	0.005	03/30/01
X01105	XG.2001.376-16	106-93-4	1,2 Dibromoethane (EDB)	ND	mg / Kg	1	0.005	03/30/01
X01105	XG.2001.376-16	95-50-1	1,2 Dichlorobenzene	ND	mg / Kg	1	0.005	03/30/01
X01105	XG.2001.376-16	107-06-2	1,2 Dichloroethane	ND	mg / Kg	1	0.005	03/30/01
X01105	XG.2001.376-16	78-87-5	1,2 Dichloropropane	ND	mg / Kg	1	0.005	03/30/01
X01105	XG.2001.376-16	96-18-4	1,2,3 Trichloropropane	ND	mg / Kg	1	0.005	03/30/01
X01105	XG.2001.376-16	95-63-6	1,2,4-Trimethylbenzene	ND	mg / Kg	1	0.005	03/30/01
X01105	XG.2001.376-16	541-73-1	1,3 Dichlorobenzene	ND	mg / Kg	1	0.005	03/30/01
X01105	XG.2001.376-16	108-67-8	1,3,5-Trimethylbenzene	ND	mg / Kg	1	0.005	03/30/01
X01105	XG.2001.376-16	764-41-0	1,4 Dichloro-2-butene	ND	mg / Kg	1	0.05	03/30/01
X01105	XG.2001.376-16	106-46-7	1,4 Dichlorobenzene	ND	mg / Kg	1	0.005	03/30/01
X01105	XG.2001.376-16	78-93-3	2-Butanone (MEK)	ND	mg / Kg	1	0.025	03/30/01
X01105	XG.2001.376-16	110-75-8	2-Chloroethylvinylether	ND	mg / Kg	1	0.025	03/30/01
X01105	XG.2001.376-16	591-78-6	2-Hexanone (MBK)	ND	mg / Kg	1	0.025	03/30/01
X01105	XG.2001.376-16	108-10-1	4-Methyl-2-pentanone (MIBK)	ND	mg / Kg	1	0.025	03/30/01
X01105	XG.2001.376-16	67-64-1	Acetone	ND	mg / Kg	1	0.05	03/30/01
X01105	XG.2001.376-16	107-02-8	Acrolein	ND	mg / Kg	1	0.1	03/30/01

Quality Control Summary

Client: **CH2MHILL**

Project: **0103365** **160660.02.FF.SA**

Explanation of codes

D *Not applicable due to sample dilut*

L *Not applicable due to MDL proxin*

X01105	XG.2001.376-16	107-13-1	Acrylonitrile	ND	mg / Kg	1	0.1	03/30/01
X01105	XG.2001.376-16	71-43-2	Benzene	ND	mg / Kg	1	0.005	03/30/01
X01105	XG.2001.376-16	75-27-4	Bromodichloromethane	ND	mg / Kg	1	0.005	03/30/01
X01105	XG.2001.376-16	75-25-2	Bromoform	ND	mg / Kg	1	0.005	03/30/01
X01105	XG.2001.376-16	74-83-9	Bromomethane	ND	mg / Kg	1	0.025	03/30/01
X01105	XG.2001.376-16	75-15-0	Carbon disulfide	ND	mg / Kg	1	0.025	03/30/01
X01105	XG.2001.376-16	56-23-5	Carbon tetrachloride	ND	mg / Kg	1	0.005	03/30/01
X01105	XG.2001.376-16	108-90-7	Chlorobenzene	ND	mg / Kg	1	0.005	03/30/01
X01105	XG.2001.376-16	124-48-1	Chlorodibromomethane	ND	mg / Kg	1	0.005	03/30/01
X01105	XG.2001.376-16	75-00-3	Chloroethane	ND	mg / Kg	1	0.025	03/30/01
X01105	XG.2001.376-16	67-66-3	Chloroform	ND	mg / Kg	1	0.005	03/30/01
X01105	XG.2001.376-16	74-87-3	Chloromethane	ND	mg / Kg	1	0.025	03/30/01
X01105	XG.2001.376-16	156-59-2	cis-1,2 dichloroethene	ND	mg / Kg	1	0.005	03/30/01
X01105	XG.2001.376-16	10061-01-5	cis-1,3 dichloropropene	ND	mg / Kg	1	0.005	03/30/01
X01105	XG.2001.376-16	74-95-3	Dibromomethane	ND	mg / Kg	1	0.005	03/30/01
X01105	XG.2001.376-16	97-63-2	Ethyl methacrylate	ND	mg / Kg	1	0.025	03/30/01
X01105	XG.2001.376-16	100-41-4	Ethylbenzene	ND	mg / Kg	1	0.005	03/30/01
X01105	XG.2001.376-16		Freon 113	ND	mg / Kg	1	0.025	03/30/01
X01105	XG.2001.376-16	75-71-8	Freon 12	ND	mg / Kg	1	0.05	03/30/01
X01105	XG.2001.376-16	74-88-4	Iodomethane	ND	mg / Kg	1	0.025	03/30/01
X01105	XG.2001.376-16	1634-04-4	Methyl t-butyl ether (MTBE)	ND	mg / Kg	1	0.005	03/30/01
X01105	XG.2001.376-16	75-09-2	Methylene chloride	ND	mg / Kg	1	0.05	03/30/01
X01105	XG.2001.376-16	91-20-3	Naphthalene	ND	mg / Kg	1	0.025	03/30/01
X01105	XG.2001.376-16	95-47-6	o-Xylene	ND	mg / Kg	1	0.005	03/30
X01105	XG.2001.376-16	108-38-3/106-42	p/m Xylenes	ND	mg / Kg	1	0.01	03/3
X01105	XG.2001.376-16	100-42-5	Styrene	ND	mg / Kg	1	0.005	03/30/01
X01105	XG.2001.376-16	156-60-5	t-1,2 Dichloroethene	ND	mg / Kg	1	0.005	03/30/01
X01105	XG.2001.376-16	10061-02-6	t-1,3 Dichloropropene	ND	mg / Kg	1	0.005	03/30/01
X01105	XG.2001.376-16	127-18-4	Tetrachloroethene	ND	mg / Kg	1	0.005	03/30/01
X01105	XG.2001.376-16	108-88-3	Toluene	ND	mg / Kg	1	0.005	03/30/01
X01105	XG.2001.376-16	79-01-6	Trichloroethene	ND	mg / Kg	1	0.005	03/30/01
X01105	XG.2001.376-16	75-69-4	Trichlorofluoromethane	ND	mg / Kg	1	0.025	03/30/01
X01105	XG.2001.376-16	108-05-4	Vinyl acetate	ND	mg / Kg	1	0.025	03/30/01
X01105	XG.2001.376-16	75-01-4	Vinyl chloride	ND	mg / Kg	1	0.025	03/30/01

X01105-022 **SW846 8260A Purgeable VOCs by GC/MS**

X01105	XG.2001.384-1	75-34-3	1,1 Dichloroethane	ND	mg / Kg	1	0.005	04/03/01
X01105	XG.2001.384-1	75-34-3	1,1 Dichloroethene	ND	mg / Kg	1	0.005	04/03/01
X01105	XG.2001.384-1	71-55-6	1,1,1 Trichloroethane	ND	mg / Kg	1	0.005	04/03/01
X01105	XG.2001.384-1	630-20-6	1,1,1,2 Tetrachloroethane	ND	mg / Kg	1	0.005	04/03/01
X01105	XG.2001.384-1	79-00-5	1,1,2 Trichloroethane	ND	mg / Kg	1	0.005	04/03/01
X01105	XG.2001.384-1	79-34-5	1,1,2,2 Tetrachloroethane	ND	mg / Kg	1	0.005	04/03/01
X01105	XG.2001.384-1	106-93-4	1,2 Dibromoethane (EDB)	ND	mg / Kg	1	0.005	04/03/01
X01105	XG.2001.384-1	95-50-1	1,2 Dichlorobenzene	ND	mg / Kg	1	0.005	04/03/01
X01105	XG.2001.384-1	107-06-2	1,2 Dichloroethane	ND	mg / Kg	1	0.005	04/03/01
X01105	XG.2001.384-1	78-87-5	1,2 Dichloropropane	ND	mg / Kg	1	0.005	04/03/01
X01105	XG.2001.384-1	96-18-4	1,2,3 Trichloropropane	ND	mg / Kg	1	0.005	04/03/01
X01105	XG.2001.384-1	95-63-6	1,2,4-Trimethylbenzene	ND	mg / Kg	1	0.005	04/03/01
X01105	XG.2001.384-1	541-73-1	1,3 Dichlorobenzene	ND	mg / Kg	1	0.005	04/03/01
X01105	XG.2001.384-1	108-67-8	1,3,5-Trimethylbenzene	ND	mg / Kg	1	0.005	04/0

Quality Control Summary

Client: CH2MHILL

ct: 0103365 160660.02.FF.SA

Explanation of codes

D	*Not applicable due to sample dilution*
L	*Not applicable due to MDL proximity*

X01105	XG.2001.384-1	764-41-0	1,4 Dichloro-2-butene	ND	mg / Kg	1	0.05	04/03/01
X01105	XG.2001.384-1	106-46-7	1,4 Dichlorobenzene	ND	mg / Kg	1	0.005	04/03/01
X01105	XG.2001.384-1	78-93-3	2-Butanone (MEK)	ND	mg / Kg	1	0.025	04/03/01
X01105	XG.2001.384-1	110-75-8	2-Chloroethylvinylether	ND	mg / Kg	1	0.025	04/03/01
X01105	XG.2001.384-1	591-78-6	2-Hexanone (MBK)	ND	mg / Kg	1	0.025	04/03/01
X01105	XG.2001.384-1	108-10-1	4-Methyl-2-pentanone (MIBK)	ND	mg / Kg	1	0.025	04/03/01
X01105	XG.2001.384-1	67-64-1	Acetone	ND	mg / Kg	1	0.05	04/03/01
X01105	XG.2001.384-1	107-02-8	Acrolein	ND	mg / Kg	1	0.1	04/03/01
X01105	XG.2001.384-1	107-13-1	Acrylonitrile	ND	mg / Kg	1	0.1	04/03/01
X01105	XG.2001.384-1	71-43-2	Benzene	ND	mg / Kg	1	0.005	04/03/01
X01105	XG.2001.384-1	75-27-4	Bromodichloromethane	ND	mg / Kg	1	0.005	04/03/01
X01105	XG.2001.384-1	75-25-2	Bromoform	ND	mg / Kg	1	0.005	04/03/01
X01105	XG.2001.384-1	74-83-9	Bromomethane	ND	mg / Kg	1	0.025	04/03/01
X01105	XG.2001.384-1	75-15-0	Carbon disulfide	ND	mg / Kg	1	0.025	04/03/01
X01105	XG.2001.384-1	56-23-5	Carbon tetrachloride	ND	mg / Kg	1	0.005	04/03/01
X01105	XG.2001.384-1	108-90-7	Chlorobenzene	ND	mg / Kg	1	0.005	04/03/01
X01105	XG.2001.384-1	124-48-1	Chlorodibromomethane	ND	mg / Kg	1	0.005	04/03/01
X01105	XG.2001.384-1	75-00-3	Chloroethane	ND	mg / Kg	1	0.025	04/03/01
X01105	XG.2001.384-1	67-66-3	Chloroform	ND	mg / Kg	1	0.005	04/03/01
X01105	XG.2001.384-1	74-87-3	Chloromethane	ND	mg / Kg	1	0.025	04/03/01
X01105	XG.2001.384-1	156-59-2	cis-1,2 dichloroethene	ND	mg / Kg	1	0.005	04/03/01
X01105	XG.2001.384-1	10061-01-5	cis-1,3 dichloropropene	ND	mg / Kg	1	0.005	04/03/01
X01105	XG.2001.384-1	74-95-3	Dibromomethane	ND	mg / Kg	1	0.005	04/03/01
X01105	XG.2001.384-1	97-63-2	Ethyl methacrylate	ND	mg / Kg	1	0.025	04/03/01
X01105	XG.2001.384-1	100-41-4	Ethylbenzene	ND	mg / Kg	1	0.005	04/03/01
X01105	XG.2001.384-1		Freon 113	ND	mg / Kg	1	0.025	04/03/01
X01105	XG.2001.384-1	75-71-8	Freon 12	ND	mg / Kg	1	0.05	04/03/01
X01105	XG.2001.384-1	74-88-4	Iodomethane	ND	mg / Kg	1	0.025	04/03/01
X01105	XG.2001.384-1	1634-04-4	Methyl t-butyl ether (MTBE)	ND	mg / Kg	1	0.005	04/03/01
X01105	XG.2001.384-1	75-09-2	Methylene chloride	ND	mg / Kg	1	0.05	04/03/01
X01105	XG.2001.384-1	91-20-3	Naphthalene	ND	mg / Kg	1	0.025	04/03/01
X01105	XG.2001.384-1	95-47-6	o-Xylene	ND	mg / Kg	1	0.005	04/03/01
X01105	XG.2001.384-1	108-38-3/106-42	p/m Xylenes	ND	mg / Kg	1	0.01	04/03/01
X01105	XG.2001.384-1	100-42-5	Styrene	ND	mg / Kg	1	0.005	04/03/01
X01105	XG.2001.384-1	156-60-5	t-1,2 Dichloroethene	ND	mg / Kg	1	0.005	04/03/01
X01105	XG.2001.384-1	10061-02-6	t-1,3 Dichloropropene	ND	mg / Kg	1	0.005	04/03/01
X01105	XG.2001.384-1	127-18-4	Tetrachloroethene	ND	mg / Kg	1	0.005	04/03/01
X01105	XG.2001.384-1	108-88-3	Toluene	ND	mg / Kg	1	0.005	04/03/01
X01105	XG.2001.384-1	79-01-6	Trichloroethene	ND	mg / Kg	1	0.005	04/03/01
X01105	XG.2001.384-1	75-69-4	Trichlorofluoromethane	ND	mg / Kg	1	0.025	04/03/01
X01105	XG.2001.384-1	108-05-4	Vinyl acetate	ND	mg / Kg	1	0.025	04/03/01
X01105	XG.2001.384-1	75-01-4	Vinyl chloride	ND	mg / Kg	1	0.025	04/03/01
X01105-037		**SW846 8260A Purgeable VOCs by GC/MS**						
X01105	XG.2001.388-1	75-34-3	1,1 Dichloroethane	ND	mg / Kg	1	0.005	04/04/01
X01105	XG.2001.388-1	75-34-3	1,1 Dichloroethene	ND	mg / Kg	1	0.005	04/04/01
X01105	XG.2001.388-1	71-55-6	1,1,1 Trichloroethane	ND	mg / Kg	1	0.005	04/04/01
X01105	XG.2001.388-1	630-20-6	1,1,1,2 Tetrachloroethane	ND	mg / Kg	1	0.005	04/04/01
X01105	XG.2001.388-1	79-00-5	1,1,2 Trichloroethane	ND	mg / Kg	1	0.005	04/04/01
X01105	XG.2001.388-1	79-34-5	1,1,2,2 Tetrachloroethane	ND	mg / Kg	1	0.005	04/04/01

Quality Control Summary

Client: **CH2MHILL**

Project: **0103365** **160660.02.FF.SA**

Explanation of codes

D *Not applicable due to sample dilut*

L *Not applicable due to MDL proxim*

X01105	XG.2001.388-1	106-93-4	1,2 Dibromoethane (EDB)	ND	mg / Kg	1	0.005	04/04/01
X01105	XG.2001.388-1	95-50-1	1,2 Dichlorobenzene	ND	mg / Kg	1	0.005	04/04/01
X01105	XG.2001.388-1	107-06-2	1,2 Dichloroethane	ND	mg / Kg	1	0.005	04/04/01
X01105	XG.2001.388-1	78-87-5	1,2 Dichloropropane	ND	mg / Kg	1	0.005	04/04/01
X01105	XG.2001.388-1	96-18-4	1,2,3 Trichloropropane	ND	mg / Kg	1	0.005	04/04/01
X01105	XG.2001.388-1	95-63-6	1,2,4-Trimethylbenzene	ND	mg / Kg	1	0.005	04/04/01
X01105	XG.2001.388-1	541-73-1	1,3 Dichlorobenzene	ND	mg / Kg	1	0.005	04/04/01
X01105	XG.2001.388-1	108-67-8	1,3,5-Trimethylbenzene	ND	mg / Kg	1	0.005	04/04/01
X01105	XG.2001.388-1	764-41-0	1,4 Dichloro-2-butene	ND	mg / Kg	1	0.05	04/04/01
X01105	XG.2001.388-1	106-46-7	1,4 Dichlorobenzene	ND	mg / Kg	1	0.005	04/04/01
X01105	XG.2001.388-1	78-93-3	2-Butanone (MEK)	ND	mg / Kg	1	0.025	04/04/01
X01105	XG.2001.388-1	110-75-8	2-Chloroethylvinylether	ND	mg / Kg	1	0.025	04/04/01
X01105	XG.2001.388-1	591-78-6	2-Hexanone (MBK)	ND	mg / Kg	1	0.025	04/04/01
X01105	XG.2001.388-1	108-10-1	4-Methyl-2-pentanone (MIBK)	ND	mg / Kg	1	0.025	04/04/01
X01105	XG.2001.388-1	67-64-1	Acetone	ND	mg / Kg	1	0.05	04/04/01
X01105	XG.2001.388-1	107-02-8	Acrolein	ND	mg / Kg	1	0.1	04/04/01
X01105	XG.2001.388-1	107-13-1	Acrylonitrile	ND	mg / Kg	1	0.1	04/04/01
X01105	XG.2001.388-1	71-43-2	Benzene	ND	mg / Kg	1	0.005	04/04/01
X01105	XG.2001.388-1	75-27-4	Bromodichloromethane	ND	mg / Kg	1	0.005	04/04/01
X01105	XG.2001.388-1	75-25-2	Bromoform	ND	mg / Kg	1	0.005	04/04/01
X01105	XG.2001.388-1	74-83-9	Bromomethane	ND	mg / Kg	1	0.025	04/04/01
X01105	XG.2001.388-1	75-15-0	Carbon disulfide	ND	mg / Kg	1	0.025	04/04/01
X01105	XG.2001.388-1	56-23-5	Carbon tetrachloride	ND	mg / Kg	1	0.005	04/04/01
X01105	XG.2001.388-1	108-90-7	Chlorobenzene	ND	mg / Kg	1	0.005	04/04
X01105	XG.2001.388-1	124-48-1	Chlorodibromomethane	ND	mg / Kg	1	0.005	04/04
X01105	XG.2001.388-1	75-00-3	Chloroethane	ND	mg / Kg	1	0.025	04/04/01
X01105	XG.2001.388-1	67-66-3	Chloroform	ND	mg / Kg	1	0.005	04/04/01
X01105	XG.2001.388-1	74-87-3	Chloromethane	ND	mg / Kg	1	0.025	04/04/01
X01105	XG.2001.388-1	156-59-2	cis-1,2 dichloroethene	ND	mg / Kg	1	0.005	04/04/01
X01105	XG.2001.388-1	10061-01-5	cis-1,3 dichloropropene	ND	mg / Kg	1	0.005	04/04/01
X01105	XG.2001.388-1	74-95-3	Dibromomethane	ND	mg / Kg	1	0.005	04/04/01
X01105	XG.2001.388-1	97-63-2	Ethyl methacrylate	ND	mg / Kg	1	0.025	04/04/01
X01105	XG.2001.388-1	100-41-4	Ethylbenzene	ND	mg / Kg	1	0.005	04/04/01
X01105	XG.2001.388-1		Freon 113	ND	mg / Kg	1	0.025	04/04/01
X01105	XG.2001.388-1	75-71-8	Freon 12	ND	mg / Kg	1	0.05	04/04/01
X01105	XG.2001.388-1	74-88-4	Iodomethane	ND	mg / Kg	1	0.025	04/04/01
X01105	XG.2001.388-1	1634-04-4	Methyl t-butyl ether (MTBE)	ND	mg / Kg	1	0.005	04/04/01
X01105	XG.2001.388-1	75-09-2	Methylene chloride	ND	mg / Kg	1	0.05	04/04/01
X01105	XG.2001.388-1	91-20-3	Naphthalene	ND	mg / Kg	1	0.025	04/04/01
X01105	XG.2001.388-1	95-47-6	o-Xylene	ND	mg / Kg	1	0.005	04/04/01
X01105	XG.2001.388-1	108-38-3/106-42	p/m Xylenes	ND	mg / Kg	1	0.01	04/04/01
X01105	XG.2001.388-1	100-42-5	Styrene	ND	mg / Kg	1	0.005	04/04/01
X01105	XG.2001.388-1	156-60-5	t-1,2 Dichloroethene	ND	mg / Kg	1	0.005	04/04/01
X01105	XG.2001.388-1	10061-02-6	t-1,3 Dichloropropene	ND	mg / Kg	1	0.005	04/04/01
X01105	XG.2001.388-1	127-18-4	Tetrachloroethene	ND	mg / Kg	1	0.005	04/04/01
X01105	XG.2001.388-1	108-88-3	Toluene	ND	mg / Kg	1	0.005	04/04/01
X01105	XG.2001.388-1	79-01-6	Trichloroethene	ND	mg / Kg	1	0.005	04/04/01
X01105	XG.2001.388-1	75-69-4	Trichlorofluoromethane	ND	mg / Kg	1	0.025	04/04/01
X01105	XG.2001.388-1	108-05-4	Vinyl acetate	ND	mg / Kg	1	0.025	04/04
X01105	XG.2001.388-1	75-01-4	Vinyl chloride	ND	mg / Kg	1	0.025	04/04

Quality Control Summary

Client: CH2MHILL

Project: 0103365 160660.02.FF.SA

Explanation of codes

D	*Not applicable due to sample dilution*
L	*Not applicable due to MDL proximity*

X0194-001		**SW846 5030A/8015A GRO by GC/FID**						
X0194	XG.2001.325-1		Gasoline Range Organics	ND	mg / Kg	1	0.25	03/16/01
X0194-007		**SW846 5030A/8015A GRO by GC/FID**						
X0194	XG.2001.328-1		Gasoline Range Organics	ND	mg / Kg	1	0.25	03/20/01
X0194-010		**SW846 5030A/8015A GRO by GC/FID**						
X0194	XG.2001.337-1		Gasoline Range Organics	ND	mg / Kg	1	0.25	03/21/01
X0194-014		**SW846 5030A/8015A GRO by GC/FID**						
X0194	XG.2001.364-1		Gasoline Range Organics	ND	mg / Kg	1	0.25	03/27/01
X0194-019		**SW846 5030A/8015A GRO by GC/FID**						
X0194	XG.2001.364-6		Gasoline Range Organics	ND	mg / Kg	1	0.25	03/28/01
X0194-025		**SW846 5030A/8015A GRO by GC/FID**						
X0194	XG.2001.394-1		Gasoline Range Organics	ND	mg / Kg	1	0.25	04/05/01
X0198-001		**SW846 ME/8015A Diesel Range Organics by GC/FID**						
X0198	XG.2001.334-1		Diesel Range Organics	ND	mg / Kg	1	25	03/20/01
X0198-008		**SW846 ME/8015A Diesel Range Organics by GC/FID**						
X0198	XG.2001.338-1		Diesel Range Organics	ND	mg / Kg	1	25	03/21/01
X0198-012		**SW846 ME/8015A Diesel Range Organics by GC/FID**						
X0198	XG.2001.361-1		Diesel Range Organics	ND	mg / Kg	1	25	03/27/01
[illegible]8-017		**SW846 ME/8015A Diesel Range Organics by GC/FID**						
[illegible]	XG.2001.393-1		Diesel Range Organics	ND	mg / Kg	1	25	04/05/01

QC Type **MS: Matrix Spike** QC Matrix **SOLID**

QC Group	Run Sequence	CAS #	Analyte	Result	Units	Dilution Factor	Detection Limit	Code	Run Date
X01105-016		**SW846 8260A Purgeable VOCs by GC/MS**							
X01105	XG.2001.376-15	75-34-3	1,1 Dichloroethene	111	% Recovery	1	NA		03/29/01
X01105	XG.2001.376-15	106-46-7	1,4 Dichlorobenzene	101	% Recovery	1	NA		03/29/01
X01105	XG.2001.376-15	71-43-2	Benzene	108	% Recovery	1	NA		03/29/01
X01105	XG.2001.376-15	108-90-7	Chlorobenzene	105	% Recovery	1	NA		03/29/01
X01105	XG.2001.376-15	108-88-3	Toluene	108	% Recovery	1	NA		03/29/01
X01105	XG.2001.376-15	79-01-6	Trichloroethene	107	% Recovery	1	NA		03/29/01
X0194-005		**SW846 5030A/8015A GRO by GC/FID**							
X0194	XG.2001.325-5		Gasoline Range Organics	111	% Recovery	1	NA		03/16/01
X0198-005		**SW846 ME/8015A Diesel Range Organics by GC/FID**							
X0198	XG.2001.334-5		Diesel Range Organics	89	% Recovery	1	NA		03/20/01

Quality Control Summary

Client: **CH2MHILL**

Project: **0103365** **160660.02.FF.SA**

Explanation of codes

D *Not applicable due to sample dilut*

L *Not applicable due to MDL proxim*

QC Type **MSD: Matrix Spike Duplicate Accuracy** QC Matrix **SOLID**

QC Group	Run Sequence	CAS #	Analyte	Result	Units	Dilution Factor	Detection Limit	Code	Run Date
X01105-020		**SW846 8260A Purgeable VOCs by GC/MS**							
X01105	XG.2001.376-18	75-34-3	1,1 Dichloroethene	111	% Recovery	1	NA		03/30/0 1
X01105	XG.2001.376-18	106-46-7	1,4 Dichlorobenzene	102	% Recovery	1	NA		03/30/0 1
X01105	XG.2001.376-18	71-43-2	Benzene	108	% Recovery	1	NA		03/30/0 1
X01105	XG.2001.376-18	108-90-7	Chlorobenzene	104	% Recovery	1	NA		03/30/0 1
X01105	XG.2001.376-18	108-88-3	Toluene	107	% Recovery	1	NA		03/30/0 1
X01105	XG.2001.376-18	79-01-6	Trichloroethene	106	% Recovery	1	NA		03/30/0 1
X0194-006		**SW846 5030A/8015A GRO by GC/FID**							
X0194	XG.2001.325-6		Gasoline Range Organics	113	% Recovery	1	NA		03/16/0 1
X0198-006		**SW846 ME/8015A Diesel Range Organics by GC/FID**							
X0198	XG.2001.334-6		Diesel Range Organics	90	% Recovery	1	NA		03/20/0 1

QC Type **MSD: Matrix Spike Duplicate Precision** QC Matrix **SOLID**

QC Group	Run Sequence	CAS #	Analyte	Result	Units	Dilution Factor	Detection Limit	Code	Run Date
X01105-020		**SW846 8260A Purgeable VOCs by GC/MS**							
X01105	XG.2001.376-18	75-34-3	1,1 Dichloroethene	< 1	RPD	1	NA		03/30/0 1
X01105	XG.2001.376-18	106-46-7	1,4 Dichlorobenzene	< 1	RPD	1	NA		03/30/0 1
X01105	XG.2001.376-18	71-43-2	Benzene	< 1	RPD	1	NA		03/30/0 1
X01105	XG.2001.376-18	108-90-7	Chlorobenzene	1	RPD	1	NA		03/30/0 1
X01105	XG.2001.376-18	108-88-3	Toluene	1	RPD	1	NA		03/30/0 1
X01105	XG.2001.376-18	79-01-6	Trichloroethene	< 1	RPD	1	NA		03/30/0 1
X0194-006		**SW846 5030A/8015A GRO by GC/FID**							
X0194	XG.2001.325-6		Gasoline Range Organics	2	RPD	1	NA		03/16/0 1
X0198-006		**SW846 ME/8015A Diesel Range Organics by GC/FID**							
X0198	XG.2001.334-6		Diesel Range Organics	1	RPD	1	NA		03/20/0 1

Quality Control Summary

Explanation of codes

D	*Not applicable due to sample dilution*
L	*Not applicable due to MDL proximity*

Client: CH2MHILL

Project: 0103365 160660.02.FF.SA

QC Type **LCS: Lab Control Spike** QC Matrix **WATER**

QC Group	Run Sequence	CAS #	Analyte	Result	Units	Dilution Factor	Detection Limit	Code	Run Date
X01108-008		**SW846 8260A Purgeable VOCs by GC/MS**							
X01108	XG.2001.371-4	75-34-3	1,1 Dichloroethene	109	% Recovery	1	NA		03/30/01
X01108	XG.2001.371-4	106-46-7	1,4 Dichlorobenzene	103	% Recovery	1	NA		03/30/01
X01108	XG.2001.371-4	71-43-2	Benzene	116	% Recovery	1	NA		03/30/01
X01108	XG.2001.371-4	108-90-7	Chlorobenzene	109	% Recovery	1	NA		03/30/01
X01108	XG.2001.371-4	108-88-3	Toluene	111	% Recovery	1	NA		03/30/01
X01108	XG.2001.371-4	79-01-6	Trichloroethene	110	% Recovery	1	NA		03/30/01
X01117-008		**SW846 5030A/8015A GRO by GC/FID**							
X01117	XG.2001.400-2		Gasoline Range Organics	128	% Recovery	1	NA		04/06/01
X01119-002		**SW846 ME/8015A Diesel Range Organics by GC/FID**							
X01119	XG.2001.393-6		Diesel Range Organics	93	% Recovery	1	NA		04/05/01
X0199-002		**SW846 3510B/8270B SVOCs by GC/MS**							
X0199	XG.2001.343-2	120-82-1	1,2,4-Trichlorobenzene	67	% Recovery	1	NA		03/21/01
X0199	XG.2001.343-2	106-46-7	1,4-Dichlorobenzene	68	% Recovery	1	NA		03/21/01
X0199	XG.2001.343-2	121-14-2	2,4-Dinitrotoluene	88	% Recovery	1	NA		03/21/01
[illegible]	XG.2001.343-2	95-57-8	2-Chlorophenol	67	% Recovery	1	NA		03/21/01
[illegible]	XG.2001.343-2	59-50-7	4-Chloro-3-methylphenol	70	% Recovery	1	NA		03/21/01
X0199	XG.2001.343-2	100-02-7	4-Nitrophenol	31	% Recovery	1	NA		03/21/01
X0199	XG.2001.343-2	83-32-9	Acenaphthene	86	% Recovery	1	NA		03/21/01
X0199	XG.2001.343-2	117-84-0	di-n-Octylpthalate	100	% Recovery	1	NA		03/21/01
X0199	XG.2001.343-2	621-64-7	n-Nitroso-di-n-propylamine	87	% Recovery	1	NA		03/21/01
X0199	XG.2001.343-2	87-86-5	Pentachlorophenol	78	% Recovery	1	NA		03/21/01
X0199	XG.2001.343-2	108-95-2	Phenol	34	% Recovery	1	NA		03/21/01
X0199	XG.2001.343-2	129-00-0	Pyrene	87	% Recovery	1	NA		03/21/01

QC Type **LCSD: Lab Control Spike Duplicate Accuracy** QC Matrix **WATER**

QC Group	Run Sequence	CAS #	Analyte	Result	Units	Dilution Factor	Detection Limit	Code	Run Date
X01108-009		**SW846 8260A Purgeable VOCs by GC/MS**							
X01108	XG.2001.371-5	75-34-3	1,1 Dichloroethene	106	% Recovery	1	NA		03/30/01
X01108	XG.2001.371-5	106-46-7	1,4 Dichlorobenzene	104	% Recovery	1	NA		03/30/01
X01108	XG.2001.371-5	71-43-2	Benzene	116	% Recovery	1	NA		03/30/01
X01108	XG.2001.371-5	108-90-7	Chlorobenzene	109	% Recovery	1	NA		03/30/01
X01108	XG.2001.371-5	108-88-3	Toluene	110	% Recovery	1	NA		03/30/01
X01108	XG.2001.371-5	79-01-6	Trichloroethene	108	% Recovery	1	NA		03/30/01
X01117-009		**SW846 5030A/8015A GRO by GC/FID**							
X01117	XG.2001.400-3		Gasoline Range Organics	128	% Recovery	1	NA		04/06/01
[illegible]19-003		**SW846 ME/8015A Diesel Range Organics by GC/FID**							
[illegible]9	XG.2001.393-7		Diesel Range Organics	93	% Recovery	1	NA		04/05/01

Quality Control Summary

Client: CH2MHILL

Project: 0103365 160660.02.FF.SA

Explanation of codes

D *Not applicable due to sample diluti*

L *Not applicable due to MDL proxim*

X0199-003		**SW846 3510B/8270B SVOCs by GC/MS**							
X0199	XG.2001.343-3	120-82-1	1,2,4-Trichlorobenzene	68	% Recovery	1	NA		03/21/0
X0199	XG.2001.343-3	106-46-7	1,4-Dichlorobenzene	70	% Recovery	1	NA		03/21/0
X0199	XG.2001.343-3	121-14-2	2,4-Dinitrotoluene	89	% Recovery	1	NA		03/21/0
X0199	XG.2001.343-3	95-57-8	2-Chlorophenol	75	% Recovery	1	NA		03/21/0
X0199	XG.2001.343-3	59-50-7	4-Chloro-3-methylphenol	78	% Recovery	1	NA		03/21/0
X0199	XG.2001.343-3	100-02-7	4-Nitrophenol	32	% Recovery	1	NA		03/21/0
X0199	XG.2001.343-3	83-32-9	Acenaphthene	87	% Recovery	1	NA		03/21/0
X0199	XG.2001.343-3	117-84-0	di-n-Octylpthalate	110	% Recovery	1	NA		03/21/0
X0199	XG.2001.343-3	621-64-7	n-Nitroso-di-n-propylamine	91	% Recovery	1	NA		03/21/0
X0199	XG.2001.343-3	87-86-5	Pentachlorophenol	80	% Recovery	1	NA		03/21/0
X0199	XG.2001.343-3	108-95-2	Phenol	38	% Recovery	1	NA		03/21/0
X0199	XG.2001.343-3	129-00-0	Pyrene	90	% Recovery	1	NA		03/21/0

QC Type **LCSD: Lab Control Spike Duplicate Precision** QC Matrix **WATER**

QC Group	Run Sequence	CAS #	Analyte	Result	Units	Dilution Factor	Detection Limit	Code	Run Date
X01108-009		**SW846 8260A Purgeable VOCs by GC/MS**							
X01108	XG.2001.371-5	75-34-3	1,1 Dichloroethene	3	RPD	1	NA		03/30/0
X01108	XG.2001.371-5	106-46-7	1,4 Dichlorobenzene	< 1	RPD	1	NA		03/30/0
X01108	XG.2001.371-5	71-43-2	Benzene	< 1	RPD	1	NA		03/30
X01108	XG.2001.371-5	108-90-7	Chlorobenzene	< 1	RPD	1	NA		03/30
X01108	XG.2001.371-5	108-88-3	Toluene	< 1	RPD	1	NA		03/30/0
X01108	XG.2001.371-5	79-01-6	Trichloroethene	2	RPD	1	NA		03/30/0
X01117-009		**SW846 5030A/8015A GRO by GC/FID**							
X01117	XG.2001.400-3		Gasoline Range Organics	< 1	RPD	1	NA		04/06/0
X01119-003		**SW846 ME/8015A Diesel Range Organics by GC/FID**							
X01119	XG.2001.393-7		Diesel Range Organics	< 1	RPD	1	NA		04/05/0
X0199-003		**SW846 3510B/8270B SVOCs by GC/MS**							
X0199	XG.2001.343-3	120-82-1	1,2,4-Trichlorobenzene	< 1	RPD	1	NA		03/21/0
X0199	XG.2001.343-3	106-46-7	1,4-Dichlorobenzene	3	RPD	1	NA		03/21/0
X0199	XG.2001.343-3	121-14-2	2,4-Dinitrotoluene	< 1	RPD	1	NA		03/21/0
X0199	XG.2001.343-3	95-57-8	2-Chlorophenol	12	RPD	1	NA		03/21/0
X0199	XG.2001.343-3	59-50-7	4-Chloro-3-methylphenol	11	RPD	1	NA		03/21/0
X0199	XG.2001.343-3	100-02-7	4-Nitrophenol	5	RPD	1	NA		03/21/0
X0199	XG.2001.343-3	83-32-9	Acenaphthene	2	RPD	1	NA		03/21/0
X0199	XG.2001.343-3	117-84-0	di-n-Octylpthalate	10	RPD	1	NA		03/21/0
X0199	XG.2001.343-3	621-64-7	n-Nitroso-di-n-propylamine	5	RPD	1	NA		03/21/0
X0199	XG.2001.343-3	87-86-5	Pentachlorophenol	3	RPD	1	NA		03/21/0
X0199	XG.2001.343-3	108-95-2	Phenol	8	RPD	1	NA		03/21/0
X0199	XG.2001.343-3	129-00-0	Pyrene	3	RPD	1	NA		03/21/0

Quality Control Summary

Client: CH2MHILL

Project: 0103365 160660.02.FF.SA

Explanation of codes

D	*Not applicable due to sample dilution*
L	*Not applicable due to MDL proximity*

QC Type **MB: Method Blank** QC Matrix **WATER**

QC Group	Run Sequence	CAS #	Analyte	Result	Units	Dilution Factor	Detection Limit	Code	Run Date
X01108-001		**SW846 8260A Purgeable VOCs by GC/MS**							
X01108	XG.2001.371-1	75-34-3	1,1 Dichloroethane	ND	ug / L	1	1		03/30/01
X01108	XG.2001.371-1	75-34-3	1,1 Dichloroethene	ND	ug / L	1	1		03/30/01
X01108	XG.2001.371-1	71-55-6	1,1,1 Trichloroethane	ND	ug / L	1	1		03/30/01
X01108	XG.2001.371-1	630-20-6	1,1,1,2 Tetrachloroethane	ND	ug / L	1	1		03/30/01
X01108	XG.2001.371-1	79-00-5	1,1,2 Trichloroethane	ND	ug / L	1	1		03/30/01
X01108	XG.2001.371-1	79-34-5	1,1,2,2 Tetrachloroethane	ND	ug / L	1	1		03/30/01
X01108	XG.2001.371-1	106-93-4	1,2 Dibromoethane (EDB)	ND	ug / L	1	1		03/30/01
X01108	XG.2001.371-1	95-50-1	1,2 Dichlorobenzene	ND	ug / L	1	1		03/30/01
X01108	XG.2001.371-1	107-06-2	1,2 Dichloroethane	ND	ug / L	1	1		03/30/01
X01108	XG.2001.371-1	78-87-5	1,2 Dichloropropane	ND	ug / L	1	1		03/30/01
X01108	XG.2001.371-1	96-18-4	1,2,3 Trichloropropane	ND	ug / L	1	1		03/30/01
X01108	XG.2001.371-1	95-63-6	1,2,4-Trimethylbenzene	ND	ug / L	1	1		03/30/01
X01108	XG.2001.371-1	541-73-1	1,3 Dichlorobenzene	ND	ug / L	1	1		03/30/01
X01108	XG.2001.371-1	108-67-8	1,3,5-Trimethylbenzene	ND	ug / L	1	1		03/30/01
X01108	XG.2001.371-1	764-41-0	1,4 Dichloro-2-butene	ND	ug / L	1	10		03/30/01
X01108	XG.2001.371-1	106-46-7	1,4 Dichlorobenzene	ND	ug / L	1	1		03/30/01
[illegible]	XG.2001.371-1	78-93-3	2-Butanone (MEK)	ND	ug / L	1	5		03/30/01
[illegible]	XG.2001.371-1	110-75-8	2-Chloroethylvinylether	ND	ug / L	1	5		03/30/01
X01108	XG.2001.371-1	591-78-6	2-Hexanone (MBK)	ND	ug / L	1	5		03/30/01
X01108	XG.2001.371-1	108-10-1	4-Methyl-2-pentanone (MIBK)	ND	ug / L	1	5		03/30/01
X01108	XG.2001.371-1	67-64-1	Acetone	ND	ug / L	1	10		03/30/01
X01108	XG.2001.371-1	107-02-8	Acrolein	ND	ug / L	1	20		03/30/01
X01108	XG.2001.371-1	107-13-1	Acrylonitrile	ND	ug / L	1	20		03/30/01
X01108	XG.2001.371-1	71-43-2	Benzene	ND	ug / L	1	1		03/30/01
X01108	XG.2001.371-1	75-27-4	Bromodichloromethane	ND	ug / L	1	1		03/30/01
X01108	XG.2001.371-1	75-25-2	Bromoform	ND	ug / L	1	1		03/30/01
X01108	XG.2001.371-1	74-83-9	Bromomethane	ND	ug / L	1	5		03/30/01
X01108	XG.2001.371-1	75-15-0	Carbon disulfide	ND	ug / L	1	5		03/30/01
X01108	XG.2001.371-1	56-23-5	Carbon tetrachloride	ND	ug / L	1	1		03/30/01
X01108	XG.2001.371-1	108-90-7	Chlorobenzene	ND	ug / L	1	1		03/30/01
X01108	XG.2001.371-1	124-48-1	Chlorodibromomethane	ND	ug / L	1	1		03/30/01
X01108	XG.2001.371-1	75-00-3	Chloroethane	ND	ug / L	1	5		03/30/01
X01108	XG.2001.371-1	67-66-3	Chloroform	ND	ug / L	1	1		03/30/01
X01108	XG.2001.371-1	74-87-3	Chloromethane	ND	ug / L	1	5		03/30/01
X01108	XG.2001.371-1	156-59-2	cis-1,2 dichloroethene	ND	ug / L	1	1		03/30/01
X01108	XG.2001.371-1	10061-01-5	cis-1,3 dichloropropene	ND	ug / L	1	1		03/30/01
X01108	XG.2001.371-1	74-95-3	Dibromomethane	ND	ug / L	1	1		03/30/01
X01108	XG.2001.371-1	97-63-2	Ethyl methacrylate	ND	ug / L	1	5		03/30/01
X01108	XG.2001.371-1	100-41-4	Ethylbenzene	ND	ug / L	1	1		03/30/01
X01108	XG.2001.371-1		Freon 113	ND	ug / L	1	5		03/30/01
X01108	XG.2001.371-1	75-71-8	Freon 12	ND	ug / L	1	10		03/30/01
X01108	XG.2001.371-1	74-88-4	Iodomethane	ND	ug / L	1	5		03/30/01
[illegible]	XG.2001.371-1	1634-04-4	Methyl t-butyl ether (MTBE)	ND	ug / L	1	1		03/30/01

Quality Control Summary

Client: **CH2MHILL**

Project: **0103365** **160660.02.FF.SA**

Explanation of codes

D	*Not applicable due to sample dilut*
L	*Not applicable due to MDL proxim*

X01108	XG.2001.371-1	75-09-2	Methylene chloride	ND	ug / L	1	10		03/30/01
X01108	XG.2001.371-1	91-20-3	Naphthalene	ND	ug / L	1	5		03/30/01
X01108	XG.2001.371-1	95-47-6	o-Xylene	ND	ug / L	1	1		03/30/01
X01108	XG.2001.371-1	108-38-3/106-42	p/m Xylenes	ND	ug / L	1	2		03/30/01
X01108	XG.2001.371-1	100-42-5	Styrene	1.3	ug / L	1	1		03/30/01
X01108	XG.2001.371-1	156-60-5	t-1,2 Dichloroethene	ND	ug / L	1	1		03/30/01
X01108	XG.2001.371-1	10061-02-6	t-1,3 Dichloropropene	ND	ug / L	1	1		03/30/01
X01108	XG.2001.371-1	127-18-4	Tetrachloroethene	ND	ug / L	1	1		03/30/01
X01108	XG.2001.371-1	108-88-3	Toluene	ND	ug / L	1	1		03/30/01
X01108	XG.2001.371-1	79-01-6	Trichloroethene	ND	ug / L	1	1		03/30/01
X01108	XG.2001.371-1	75-69-4	Trichlorofluoromethane	ND	ug / L	1	5		03/30/01
X01108	XG.2001.371-1	108-05-4	Vinyl acetate	ND	ug / L	1	5		03/30/01
X01108	XG.2001.371-1	75-01-4	Vinyl chloride	ND	ug / L	1	5		03/30/01
X01117-007		**SW846 5030A/8015A GRO by GC/FID**							
X01117	XG.2001.400-1		Gasoline Range Organics	ND	mg / L	1	0.05		04/06/01
X01119-001		**SW846 ME/8015A Diesel Range Organics by GC/FID**							
X01119	XG.2001.393-5		Diesel Range Organics	ND	mg / L	1	25		04/05/01
X0199-001		**SW846 3510B/8270B SVOCs by GC/MS**							
X0199	XG.2001.343-1	120-82-1	1,2,4-Trichlorobenzene	ND	ug / L	1	1		03/21/01
X0199	XG.2001.343-1	95-50-1	1,2-Dichlorobenzene	ND	ug / L	1	1		03/21/01
X0199	XG.2001.343-1	541-73-1	1,3-Dichlorobenzene	ND	ug / L	1	1		03/21/01
X0199	XG.2001.343-1	106-46-7	1,4-Dichlorobenzene	ND	ug / L	1	1		03/21
X0199	XG.2001.343-1	90-12-0	1-Methylnaphthalene	ND	ug / L	1	1		03/21
X0199	XG.2001.343-1	58-90-2	2,3,4,6-Tetrachlorophenol	ND	ug / L	1	5		03/21/0
X0199	XG.2001.343-1	95-95-4	2,4,5-Trichlorophenol	ND	ug / L	1	5		03/21/0
X0199	XG.2001.343-1	88-06-2	2,4,6-Trichlorophenol	ND	ug / L	1	5		03/21/0
X0199	XG.2001.343-1	120-83-2	2,4-Dichlorophenol	ND	ug / L	1	5		03/21/0
X0199	XG.2001.343-1	105-67-9	2,4-Dimethylphenol	ND	ug / L	1	1		03/21/0
X0199	XG.2001.343-1	51-28-5	2,4-Dinitrophenol	ND	ug / L	1	10		03/21/0
X0199	XG.2001.343-1	121-14-2	2,4-Dinitrotoluene	ND	ug / L	1	5		03/21/0
X0199	XG.2001.343-1	606-20-2	2,6-Dinitrotoluene	ND	ug / L	1	5		03/21/0
X0199	XG.2001.343-1	91-58-7	2-Chloronaphthalene	ND	ug / L	1	1		03/21/0
X0199	XG.2001.343-1	95-57-8	2-Chlorophenol	ND	ug / L	1	1		03/21/0
X0199	XG.2001.343-1	91-57-6	2-Methylnaphthalene	ND	ug / L	1	1		03/21/0
X0199	XG.2001.343-1	95-48-7	2-Methylphenol	ND	ug / L	1	1		03/21/0
X0199	XG.2001.343-1	88-74-4	2-Nitroaniline	ND	ug / L	1	5		03/21/0
X0199	XG.2001.343-1	88-75-5	2-Nitrophenol	ND	ug / L	1	5		03/21/0
X0199	XG.2001.343-1		3+4 Methylphenol	ND	ug / L	1	1		03/21/0
X0199	XG.2001.343-1	91-94-1	3,3-Dichlorobenzidine	ND	ug / L	1	10		03/21/0
X0199	XG.2001.343-1	99-09-2	3-Nitroaniline	ND	ug / L	1	5		03/21/0
X0199	XG.2001.343-1	534-52-1	4,6-Dinitro-2-methylphenol	ND	ug / L	1	10		03/21/0
X0199	XG.2001.343-1	101-55-3	4-Bromophenyl-phenylether	ND	ug / L	1	1		03/21/0
X0199	XG.2001.343-1	59-50-7	4-Chloro-3-methylphenol	ND	ug / L	1	5		03/21/0
X0199	XG.2001.343-1	106-47-8	4-Chloroaniline	ND	ug / L	1	5		03/21/0
X0199	XG.2001.343-1	7005-72-3	4-Chlorophenyl-phenylether	ND	ug / L	1	1		03/21/0
X0199	XG.2001.343-1	100-01-6	4-Nitroaniline	ND	ug / L	1	5		03/21/0
X0199	XG.2001.343-1	100-02-7	4-Nitrophenol	ND	ug / L	1	10		03/21/0
X0199	XG.2001.343-1	83-32-9	Acenaphthene	ND	ug / L	1	1		03/21

Quality Control Summary

Client: **CH2MHILL**

ect: **0103365** **160660.02.FF.SA**

Explanation of codes

D	*Not applicable due to sample dilution*
L	*Not applicable due to MDL proximity*

X0199	XG.2001.343-1	208-96-8	Acenaphthylene	ND	ug / L	1	1	03/21/01
X0199	XG.2001.343-1	62-53-3	Aniline	ND	ug / L	1	10	03/21/01
X0199	XG.2001.343-1	120-12-7	Anthracene	ND	ug / L	1	1	03/21/01
X0199	XG.2001.343-1		Azobenzene&1,2-Diphenylhydrazine	ND	ug / L	1	1	03/21/01
X0199	XG.2001.343-1	56-55-3	Benzo (a) anthracene	ND	ug / L	1	1	03/21/01
X0199	XG.2001.343-1	50-32-8	Benzo(a)pyrene	ND	ug / L	1	1	03/21/01
X0199	XG.2001.343-1		Benzo(b & k)fluoranthene	ND	ug / L	1	1	03/21/01
X0199	XG.2001.343-1	191-24-2	Benzo(g,h,i)perylene	ND	ug / L	1	1	03/21/01
X0199	XG.2001.343-1	64-85-0	Benzoic acid	ND	ug / L	1	25	03/21/01
X0199	XG.2001.343-1	100-51-6	Benzyl alcohol	ND	ug / L	1	5	03/21/01
X0199	XG.2001.343-1	111-44-4	bis (2-Chloroethyl) ether	ND	ug / L	1	1	03/21/01
X0199	XG.2001.343-1	111-91-1	bis(2-Chloroethoxy)methane	ND	ug / L	1	1	03/21/01
X0199	XG.2001.343-1	108-60-1	bis(2-Chloroisopropyl)ether	ND	ug / L	1	1	03/21/01
X0199	XG.2001.343-1	117-81-7	bis(2-Ethylhexyl)phthalate	ND	ug / L	1	5	03/21/01
X0199	XG.2001.343-1	85-68-7	Butylbenzylphthalate	ND	ug / L	1	1	03/21/01
X0199	XG.2001.343-1	218-01-9	Chrysene	ND	ug / L	1	1	03/21/01
X0199	XG.2001.343-1	84-74-2	di-n-Butylphthalate	ND	ug / L	1	1	03/21/01
X0199	XG.2001.343-1	117-84-0	di-n-Octylpthalate	ND	ug / L	1	1	03/21/01
X0199	XG.2001.343-1	53-70-3	Dibenz(a,h)anthracene	ND	ug / L	1	1	03/21/01
X0199	XG.2001.343-1	132-64-9	Dibenzofuran	ND	ug / L	1	1	03/21/01
X0199	XG.2001.343-1	84-66-2	Diethylphthalate	ND	ug / L	1	1	03/21/01
X0199	XG.2001.343-1	131-11-3	Dimethylphthalate	ND	ug / L	1	1	03/21/01
X0199	XG.2001.343-1	206-44-0	Fluoranthene	ND	ug / L	1	1	03/21/01
	XG.2001.343-1	86737	Fluorene	ND	ug / L	1	1	03/21/01
X0199	XG.2001.343-1	118-74-1	Hexachlorobenzene	ND	ug / L	1	10	03/21/01
X0199	XG.2001.343-1	87-68-3	Hexachlorobutadiene	ND	ug / L	1	10	03/21/01
X0199	XG.2001.343-1	77-47-4	Hexachlorocyclopentadiene	ND	ug / L	1	10	03/21/01
X0199	XG.2001.343-1	67-72-1	Hexachloroethane	ND	ug / L	1	5	03/21/01
X0199	XG.2001.343-1	193-39-5	Indeno(1,2,3-cd)pyrene	ND	ug / L	1	1	03/21/01
X0199	XG.2001.343-1	78-59-1	Isophorone	ND	ug / L	1	1	03/21/01
X0199	XG.2001.343-1	621-64-7	n-Nitroso-di-n-propylamine	ND	ug / L	1	1	03/21/01
X0199	XG.2001.343-1	62-75-9	n-Nitroso-dimethyl-amine	ND	ug / L	1	10	03/21/01
X0199	XG.2001.343-1	86-30-6	n-Nitrosodiphenylamine	ND	ug / L	1	1	03/21/01
X0199	XG.2001.343-1	91-20-3	Naphthalene	ND	ug / L	1	1	03/21/01
X0199	XG.2001.343-1	98-95-3	Nitrobenzene	ND	ug / L	1	1	03/21/01
X0199	XG.2001.343-1	87-86-5	Pentachlorophenol	ND	ug / L	1	10	03/21/01
X0199	XG.2001.343-1	85-01-8	Phenanthrene	ND	ug / L	1	1	03/21/01
X0199	XG.2001.343-1	108-95-2	Phenol	ND	ug / L	1	10	03/21/01
X0199	XG.2001.343-1	129-00-0	Pyrene	ND	ug / L	1	1	03/21/01
X0199	XG.2001.343-1	110-86-1	Pyridine	ND	ug / L	1	10	03/21/01
X0199-020		**SW846 3510B/8270B SVOCs by GC/MS**						
X0199	XG.2001.374-1	120-82-1	1,2,4-Trichlorobenzene	ND	ug / L	1	1	03/29/01
X0199	XG.2001.374-1	95-50-1	1,2-Dichlorobenzene	ND	ug / L	1	1	03/29/01
X0199	XG.2001.374-1	541-73-1	1,3-Dichlorobenzene	ND	ug / L	1	1	03/29/01
X0199	XG.2001.374-1	106-46-7	1,4-Dichlorobenzene	ND	ug / L	1	1	03/29/01
X0199	XG.2001.374-1	90-12-0	1-Methylnaphthalene	ND	ug / L	1	1	03/29/01
X0199	XG.2001.374-1	58-90-2	2,3,4,6-Tetrachlorophenol	ND	ug / L	1	5	03/29/01
X0199	XG.2001.374-1	95-95-4	2,4,5-Trichlorophenol	ND	ug / L	1	5	03/29/01
	XG.2001.374-1	88-06-2	2,4,6-Trichlorophenol	ND	ug / L	1	5	03/29/01

Quality Control Summary

Client: **CH2MHILL**

Project: **0103365** **160660.02.FF.SA**

Explanation of codes

D	*Not applicable due to sample dilutio*
L	*Not applicable due to MDL proximi*

X0199	XG.2001.374-1	120-83-2	2,4-Dichlorophenol	ND	ug / L	1	5		03/29/01
X0199	XG.2001.374-1	105-67-9	2,4-Dimethylphenol	ND	ug / L	1	1		03/29/01
X0199	XG.2001.374-1	51-28-5	2,4-Dinitrophenol	ND	ug / L	1	10		03/29/01
X0199	XG.2001.374-1	121-14-2	2,4-Dinitrotoluene	ND	ug / L	1	5		03/29/01
X0199	XG.2001.374-1	606-20-2	2,6-Dinitrotoluene	ND	ug / L	1	5		03/29/01
X0199	XG.2001.374-1	91-58-7	2-Chloronaphthalene	ND	ug / L	1	1		03/29/01
X0199	XG.2001.374-1	95-57-8	2-Chlorophenol	ND	ug / L	1	1		03/29/01
X0199	XG.2001.374-1	91-57-6	2-Methylnaphthalene	ND	ug / L	1	1		03/29/01
X0199	XG.2001.374-1	95-48-7	2-Methylphenol	ND	ug / L	1	1		03/29/01
X0199	XG.2001.374-1	88-74-4	2-Nitroaniline	ND	ug / L	1	5		03/29/01
X0199	XG.2001.374-1	88-75-5	2-Nitrophenol	ND	ug / L	1	5		03/29/01
X0199	XG.2001.374-1		3+4 Methylphenol	ND	ug / L	1	1		03/29/01
X0199	XG.2001.374-1	91-94-1	3,3-Dichlorobenzidine	ND	ug / L	1	10		03/29/01
X0199	XG.2001.374-1	99-09-2	3-Nitroaniline	ND	ug / L	1	5		03/29/01
X0199	XG.2001.374-1	534-52-1	4,6-Dinitro-2-methylphenol	ND	ug / L	1	10		03/29/01
X0199	XG.2001.374-1	101-55-3	4-Bromophenyl-phenylether	ND	ug / L	1	1		03/29/01
X0199	XG.2001.374-1	59-50-7	4-Chloro-3-methylphenol	ND	ug / L	1	5		03/29/01
X0199	XG.2001.374-1	106-47-8	4-Chloroaniline	ND	ug / L	1	5		03/29/01
X0199	XG.2001.374-1	7005-72-3	4-Chlorophenyl-phenylether	ND	ug / L	1	1		03/29/01
X0199	XG.2001.374-1	100-01-6	4-Nitroaniline	ND	ug / L	1	5		03/29/01
X0199	XG.2001.374-1	100-02-7	4-Nitrophenol	ND	ug / L	1	10		03/29/01
X0199	XG.2001.374-1	83-32-9	Acenaphthene	ND	ug / L	1	1		03/29/01
X0199	XG.2001.374-1	208-96-8	Acenaphthylene	ND	ug / L	1	1		03/29/01
X0199	XG.2001.374-1	62-53-3	Aniline	ND	ug / L	1	10		03/29/01
X0199	XG.2001.374-1	120-12-7	Anthracene	ND	ug / L	1	1		03/29/01
X0199	XG.2001.374-1		Azobenzene&1,2-Diphenylhydrazine	ND	ug / L	1	1		03/29/01
X0199	XG.2001.374-1	56-55-3	Benzo (a) anthracene	ND	ug / L	1	1		03/29/01
X0199	XG.2001.374-1	50-32-8	Benzo(a)pyrene	ND	ug / L	1	1		03/29/01
X0199	XG.2001.374-1		Benzo(b & k)fluoranthene	ND	ug / L	1	1		03/29/01
X0199	XG.2001.374-1	191-24-2	Benzo(g,h,i)perylene	ND	ug / L	1	1		03/29/01
X0199	XG.2001.374-1	64-85-0	Benzoic acid	ND	ug / L	1	25		03/29/01
X0199	XG.2001.374-1	100-51-6	Benzyl alcohol	ND	ug / L	1	5		03/29/01
X0199	XG.2001.374-1	111-44-4	bis (2-Chloroethyl) ether	ND	ug / L	1	1		03/29/01
X0199	XG.2001.374-1	111-91-1	bis(2-Chloroethoxy)methane	ND	ug / L	1	1		03/29/01
X0199	XG.2001.374-1	108-60-1	bis(2-Chloroisopropyl)ether	ND	ug / L	1	1		03/29/01
X0199	XG.2001.374-1	117-81-7	bis(2-Ethylhexyl)phthalate	ND	ug / L	1	5		03/29/01
X0199	XG.2001.374-1	85-68-7	Butylbenzylphthalate	ND	ug / L	1	1		03/29/01
X0199	XG.2001.374-1	218-01-9	Chrysene	ND	ug / L	1	1		03/29/01
X0199	XG.2001.374-1	84-74-2	di-n-Butylphthalate	ND	ug / L	1	1		03/29/01
X0199	XG.2001.374-1	117-84-0	di-n-Octylpthalate	ND	ug / L	1	1		03/29/01
X0199	XG.2001.374-1	53-70-3	Dibenz(a,h)anthracene	ND	ug / L	1	1		03/29/01
X0199	XG.2001.374-1	132-64-9	Dibenzofuran	ND	ug / L	1	1		03/29/01
X0199	XG.2001.374-1	84-66-2	Diethylphthalate	ND	ug / L	1	1		03/29/01
X0199	XG.2001.374-1	131-11-3	Dimethylphthalate	ND	ug / L	1	1		03/29/01
X0199	XG.2001.374-1	206-44-0	Fluoranthene	ND	ug / L	1	1		03/29/01
X0199	XG.2001.374-1	86737	Fluorene	ND	ug / L	1	1		03/29/01
X0199	XG.2001.374-1	118-74-1	Hexachlorobenzene	ND	ug / L	1	10		03/29/01
X0199	XG.2001.374-1	87-68-3	Hexachlorobutadiene	ND	ug / L	1	10		03/29/01
X0199	XG.2001.374-1	77-47-4	Hexachlorocyclopentadiene	ND	ug / L	1	10		03/29/01
X0199	XG.2001.374-1	67-72-1	Hexachloroethane	ND	ug / L	1	5		03/29/01

Client: CH2MHILL

Project: 0103365 160660.02.FF.SA

Explanation of codes

D *Not applicable due to sample dilution*

L *Not applicable due to MDL proximity*

X0199	XG.2001.374-1	193-39-5	Indeno(1,2,3-cd)pyrene	ND	ug / L	1	1		03/29/01
X0199	XG.2001.374-1	78-59-1	Isophorone	ND	ug / L	1	1		03/29/01
X0199	XG.2001.374-1	621-64-7	n-Nitroso-di-n-propylamine	ND	ug / L	1	1		03/29/01
X0199	XG.2001.374-1	62-75-9	n-Nitroso-dimethyl-amine	ND	ug / L	1	10		03/29/01
X0199	XG.2001.374-1	86-30-6	n-Nitrosodiphenylamine	ND	ug / L	1	1		03/29/01
X0199	XG.2001.374-1	91-20-3	Naphthalene	ND	ug / L	1	1		03/29/01
X0199	XG.2001.374-1	98-95-3	Nitrobenzene	ND	ug / L	1	1		03/29/01
X0199	XG.2001.374-1	87-86-5	Pentachlorophenol	ND	ug / L	1	10		03/29/01
X0199	XG.2001.374-1	85-01-8	Phenanthrene	ND	ug / L	1	1		03/29/01
X0199	XG.2001.374-1	108-95-2	Phenol	ND	ug / L	1	10		03/29/01
X0199	XG.2001.374-1	129-00-0	Pyrene	ND	ug / L	1	1		03/29/01
X0199	XG.2001.374-1	110-86-1	Pyridine	ND	ug / L	1	10		03/29/01

QC Type **MS: Matrix Spike** QC Matrix **WATER**

QC Group	Run Sequence	CAS #	Analyte	Result	Units	Dilution Factor	Detection Limit	Code	Run Date
X01108-010		**SW846 8260A Purgeable VOCs by GC/MS**							
X01108	XG.2001.371-6	75-34-3	1,1 Dichloroethene	110	% Recovery	1	NA		03/30/01
X01108	XG.2001.371-6	106-46-7	1,4 Dichlorobenzene	102	% Recovery	1	NA		03/30/01
X01108	XG.2001.371-6	71-43-2	Benzene	112	% Recovery	1	NA		03/30/01
X01108	XG.2001.371-6	108-90-7	Chlorobenzene	106	% Recovery	1	NA		03/30/01
X01108	XG.2001.371-6	108-88-3	Toluene	111	% Recovery	1	NA		03/30/01
X01108	XG.2001.371-6	79-01-6	Trichloroethene	107	% Recovery	1	NA		03/30/01
X01117-011		**SW846 5030A/8015A GRO by GC/FID**							
X01117	XG.2001.400-5		Gasoline Range Organics	133	% Recovery	1	NA		04/06/01
X01119-005		**SW846 ME/8015A Diesel Range Organics by GC/FID**							
X01119	XG.2001.393-9		Diesel Range Organics	98	% Recovery	1	NA		04/05/01
X0199-005		**SW846 3510B/8270B SVOCs by GC/MS**							
X0199	XG.2001.343-6	120-82-1	1,2,4-Trichlorobenzene	72	% Recovery	1	NA		03/21/01
X0199	XG.2001.343-6	106-46-7	1,4-Dichlorobenzene	77	% Recovery	1	NA		03/21/01
X0199	XG.2001.343-6	121-14-2	2,4-Dinitrotoluene	88	% Recovery	1	NA		03/21/01
X0199	XG.2001.343-6	95-57-8	2-Chlorophenol	75	% Recovery	1	NA		03/21/01
X0199	XG.2001.343-6	59-50-7	4-Chloro-3-methylphenol	74	% Recovery	1	NA		03/21/01
X0199	XG.2001.343-6	100-02-7	4-Nitrophenol	< 1	% Recovery	1	NA		03/21/01
X0199	XG.2001.343-6	83-32-9	Acenaphthene	83	% Recovery	1	NA		03/21/01
X0199	XG.2001.343-6	117-84-0	di-n-Octylpthalate	78	% Recovery	1	NA		03/21/01
X0199	XG.2001.343-6	621-64-7	n-Nitroso-di-n-propylamine	96	% Recovery	1	NA		03/21/01
X0199	XG.2001.343-6	87-86-5	Pentachlorophenol	60	% Recovery	1	NA		03/21/01
X0199	XG.2001.343-6	108-95-2	Phenol	38	% Recovery	1	NA		03/21/01
X0199	XG.2001.343-6	129-00-0	Pyrene	62	% Recovery	1	NA		03/21/01
X0199-007		**SW846 3510B/8270B SVOCs by GC/MS**							
X0199	XG.2001.343-7	120-82-1	1,2,4-Trichlorobenzene	67	% Recovery	1	NA		03/21/01
X0199	XG.2001.343-7	106-46-7	1,4-Dichlorobenzene	69	% Recovery	1	NA		03/21/01
X0199	XG.2001.343-7	121-14-2	2,4-Dinitrotoluene	85	% Recovery	1	NA		03/21/01
X0199	XG.2001.343-7	95-57-8	2-Chlorophenol	72	% Recovery	1	NA		03/21/01
X0199	XG.2001.343-7	59-50-7	4-Chloro-3-methylphenol	76	% Recovery	1	NA		03/21/01

Quality Control Summary

Client: **CH2MHILL**

Project: **0103365** **160660.02.FF.SA**

Explanation of codes

D *Not applicable due to sample dilu*

L *Not applicable due to MDL proxim*

X0199	XG.2001.343-7	100-02-7	4-Nitrophenol	44	% Recovery	1	NA		03/21 01
X0199	XG.2001.343-7	83-32-9	Acenaphthene	77	% Recovery	1	NA		03/21 01
X0199	XG.2001.343-7	117-84-0	di-n-Octylpthalate	79	% Recovery	1	NA		03/21 01
X0199	XG.2001.343-7	621-64-7	n-Nitroso-di-n-propylamine	89	% Recovery	1	NA		03/21 01
X0199	XG.2001.343-7	87-86-5	Pentachlorophenol	56	% Recovery	1	NA		03/21 01
X0199	XG.2001.343-7	108-95-2	Phenol	37	% Recovery	1	NA		03/21 01
X0199	XG.2001.343-7	129-00-0	Pyrene	55	% Recovery	1	NA		03/21 01

QC Type **MSD: Matrix Spike Duplicate Accuracy** QC Matrix **WATER**

QC Group	Run Sequence	CAS #	Analyte	Result	Units	Dilution Factor	Detection Limit	Code	Run Date
X01108-011		**SW846 8260A Purgeable VOCs by GC/MS**							
X01108	XG.2001.371-7	75-34-3	1,1 Dichloroethene	112	% Recovery	1	NA		03/30/01
X01108	XG.2001.371-7	106-46-7	1,4 Dichlorobenzene	106	% Recovery	1	NA		03/30/01
X01108	XG.2001.371-7	71-43-2	Benzene	116	% Recovery	1	NA		03/30/01
X01108	XG.2001.371-7	108-90-7	Chlorobenzene	111	% Recovery	1	NA		03/30/01
X01108	XG.2001.371-7	108-88-3	Toluene	113	% Recovery	1	NA		03/30/01
X01108	XG.2001.371-7	79-01-6	Trichloroethene	111	% Recovery	1	NA		03/30/01
X01117-012		**SW846 5030A/8015A GRO by GC/FID**							
X01117	XG.2001.400-6		Gasoline Range Organics	135	% Recovery	1	NA		04/06/01
X01119-006		**SW846 ME/8015A Diesel Range Organics by GC/FID**							
X01119	XG.2001.393-10		Diesel Range Organics	95	% Recovery	1	NA		04/05/01

QC Type **MSD: Matrix Spike Duplicate Precision** QC Matrix **WATER**

QC Group	Run Sequence	CAS #	Analyte	Result	Units	Dilution Factor	Detection Limit	Code	Run Date
X01108-011		**SW846 8260A Purgeable VOCs by GC/MS**							
X01108	XG.2001.371-7	75-34-3	1,1 Dichloroethene	2	RPD	1	NA		03/30/0
X01108	XG.2001.371-7	106-46-7	1,4 Dichlorobenzene	4	RPD	1	NA		03/30/0
X01108	XG.2001.371-7	71-43-2	Benzene	3	RPD	1	NA		03/30/0
X01108	XG.2001.371-7	108-90-7	Chlorobenzene	4	RPD	1	NA		03/30/0
X01108	XG.2001.371-7	108-88-3	Toluene	2	RPD	1	NA		03/30 0
X01108	XG.2001.371-7	79-01-6	Trichloroethene	4	RPD	1	NA		03/30 0
X01117-012		**SW846 5030A/8015A GRO by GC/FID**							
X01117	XG.2001.400-6		Gasoline Range Organics	1	RPD	1	NA		04/06 0
X01119-006		**SW846 ME/8015A Diesel Range Organics by GC/FID**							
X01119	XG.2001.393-10		Diesel Range Organics	3	RPD	1	NA		04/05 0

Assaigai Analytical Laboratories, Inc.

Surrogate Summary: QC

Client: CH2MHILL

.ct: 0103365 160660.02.FF.SA

QC Type **LCS** QC Matrix **SOLID**

QC Group	Run Sequence	CAS #	Analyte	Result	Units	Dilution Factor	Detection Limit	Code	Run Date
X01105-007		8260							
X01105	XG.2001.376-7	NA	1,2 Dichloroethane-D4 (SS)	83	% Recovery	1	NA		03/29/01
X01105	XG.2001.376-7	NA	4-Bromofluorobenzene (SS)	95	% Recovery	1	NA		03/29/01
X01105	XG.2001.376-7	NA	Dibromofluoromethane (SS)	98	% Recovery	1	NA		03/29/01
X01105	XG.2001.376-7	NA	Toluene-D8 (SS)	101	% Recovery	1	NA		03/29/01
X0194-002		GRO							
X0194	XG.2001.325-2	NA	4-Bromofluorobenzene-FID	103	% Recovery	1	NA		03/16/01
X0194	XG.2001.325-2	NA	4-Bromofluorobenzene-PID	ND	% Recovery	1	NA		03/16/01
X0194	XG.2001.325-2	NA	aaa-Trifluorotoluene-FID	103	% Recovery	1	NA		03/16/01
X0194	XG.2001.325-2	NA	aaa-Trifluorotoluene-PID	4180	% Recovery	1	NA		03/16/01
X0198-002		DRO							
X0198	XG.2001.334-2	NA	O-terphenyl	105	% Recovery	1	NA		03/20/01

QC Type **LCSD** QC Matrix **SOLID**

QC Group	Run Sequence	CAS #	Analyte	Result	Units	Dilution Factor	Detection Limit	Code	Run Date
X01105-008		8260							
X01105	XG.2001.376-8	NA	1,2 Dichloroethane-D4 (SS)	92	% Recovery	1	NA		03/29/01
X01105	XG.2001.376-8	NA	4-Bromofluorobenzene (SS)	96	% Recovery	1	NA		03/29/01
X01105	XG.2001.376-8	NA	Dibromofluoromethane (SS)	102	% Recovery	1	NA		03/29/01
X01105	XG.2001.376-8	NA	Toluene-D8 (SS)	103	% Recovery	1	NA		03/29/01
X0194-003		GRO							
X0194	XG.2001.325-3	NA	4-Bromofluorobenzene-FID	103	% Recovery	1	NA		03/16/01
X0194	XG.2001.325-3	NA	4-Bromofluorobenzene-PID	ND	% Recovery	1	NA		03/16/01
X0194	XG.2001.325-3	NA	aaa-Trifluorotoluene-FID	104	% Recovery	1	NA		03/16/01
X0194	XG.2001.325-3	NA	aaa-Trifluorotoluene-PID	521	% Recovery	1	NA		03/16/01
X0198-003		DRO							
X0198	XG.2001.334-3	NA	O-terphenyl	110	% Recovery	1	NA		03/20/01

QC Type **MB** QC Matrix **SOLID**

QC Group	Run Sequence	CAS #	Analyte	Result	Units	Dilution Factor	Detection Limit	Code	Run Date
X01105-001		8260							
X01105	XG.2001.376-1	NA	1,2 Dichloroethane-D4 (SS)	91	% Recovery	1	NA		03/28/01
X01105	XG.2001.376-1	NA	4-Bromofluorobenzene (SS)	97	% Recovery	1	NA		03/28/01
[illegible]	XG.2001.376-1	NA	Dibromofluoromethane (SS)	99	% Recovery	1	NA		03/28/01

Surrogate Summary: QC

Client: **CH2MHILL**

Project: **0103365** **160660.02.FF.SA**

X01105	XG.2001.376-1	NA	Toluene-D8 (SS)	101	% Recovery	1	NA	03/28/01
X01105-009		**8260**						
X01105	XG.2001.376-9	NA	1,2 Dichloroethane-D4 (SS)	100	% Recovery	1	NA	03/29/01
X01105	XG.2001.376-9	NA	4-Bromofluorobenzene (SS)	99	% Recovery	1	NA	03/29/01
X01105	XG.2001.376-9	NA	Dibromofluoromethane (SS)	102	% Recovery	1	NA	03/29/01
X01105	XG.2001.376-9	NA	Toluene-D8 (SS)	103	% Recovery	1	NA	03/29/01
X01105-018		**8260**						
X01105	XG.2001.376-16	NA	1,2 Dichloroethane-D4 (SS)	103	% Recovery	1	NA	03/30/01
X01105	XG.2001.376-16	NA	4-Bromofluorobenzene (SS)	100	% Recovery	1	NA	03/30/01
X01105	XG.2001.376-16	NA	Dibromofluoromethane (SS)	102	% Recovery	1	NA	03/30/01
X01105	XG.2001.376-16	NA	Toluene-D8 (SS)	102	% Recovery	1	NA	03/30/01
X01105-022		**8260**						
X01105	XG.2001.384-1	NA	1,2 Dichloroethane-D4 (SS)	102	% Recovery	1	NA	04/03/01
X01105	XG.2001.384-1	NA	4-Bromofluorobenzene (SS)	98	% Recovery	1	NA	04/03/01
X01105	XG.2001.384-1	NA	Dibromofluoromethane (SS)	102	% Recovery	1	NA	04/03/01
X01105	XG.2001.384-1	NA	Toluene-D8 (SS)	102	% Recovery	1	NA	04/03/01
X01105-037		**8260**						
X01105	XG.2001.388-1	NA	1,2 Dichloroethane-D4 (SS)	105	% Recovery	1	NA	04/04/01
X01105	XG.2001.388-1	NA	4-Bromofluorobenzene (SS)	98	% Recovery	1	NA	04/04/01
X01105	XG.2001.388-1	NA	Dibromofluoromethane (SS)	103	% Recovery	1	NA	04/04/01
X01105	XG.2001.388-1	NA	Toluene-D8 (SS)	103	% Recovery	1	NA	04/04/01
X0194-001		**GRO**						
X0194	XG.2001.325-1	NA	4-Bromofluorobenzene-FID	89	% Recovery	1	NA	03/16/01
X0194	XG.2001.325-1	NA	4-Bromofluorobenzene-PID	ND	% Recovery	1	NA	03/16/01
X0194	XG.2001.325-1	NA	aaa-Trifluorotoluene-FID	100	% Recovery	1	NA	03/16/01
X0194	XG.2001.325-1	NA	aaa-Trifluorotoluene-PID	ND	% Recovery	1	NA	03/16/01
X0194-007		**GRO**						
X0194	XG.2001.328-1	NA	4-Bromofluorobenzene-FID	86	% Recovery	1	NA	03/20/01
X0194	XG.2001.328-1	NA	4-Bromofluorobenzene-PID	176	% Recovery	1	NA	03/20/01
X0194	XG.2001.328-1	NA	aaa-Trifluorotoluene-FID	99	% Recovery	1	NA	03/20/01
X0194	XG.2001.328-1	NA	aaa-Trifluorotoluene-PID	35	% Recovery	1	NA	03/20/01
X0194-010		**GRO**						
X0194	XG.2001.337-1	NA	4-Bromofluorobenzene-FID	89	% Recovery	1	NA	03/21/01
X0194	XG.2001.337-1	NA	4-Bromofluorobenzene-PID	ND	% Recovery	1	NA	03/21/01
X0194	XG.2001.337-1	NA	aaa-Trifluorotoluene-FID	99	% Recovery	1	NA	03/21/01
X0194	XG.2001.337-1	NA	aaa-Trifluorotoluene-PID	63	% Recovery	1	NA	03/21/01
X0194-014		**GRO**						
X0194	XG.2001.364-1	NA	4-Bromofluorobenzene-FID	87	% Recovery	1	NA	03/27/01
X0194	XG.2001.364-1	NA	4-Bromofluorobenzene-PID	152	% Recovery	1	NA	03/27/01
X0194	XG.2001.364-1	NA	aaa-Trifluorotoluene-FID	98	% Recovery	1	NA	03/27/01
X0194	XG.2001.364-1	NA	aaa-Trifluorotoluene-PID	181	% Recovery	1	NA	03/27/01
X0194-019		**GRO**						
X0194	XG.2001.364-6	NA	4-Bromofluorobenzene-FID	88	% Recovery	1	NA	03/25/01
X0194	XG.2001.364-6	NA	4-Bromofluorobenzene-PID	360	% Recovery	1	NA	03/25/01
X0194	XG.2001.364-6	NA	aaa-Trifluorotoluene-FID	99	% Recovery	1	NA	03/25/01
X0194	XG.2001.364-6	NA	aaa-Trifluorotoluene-PID	94	% Recovery	1	NA	03/25/01

Surrogate Summary: QC

Client: **CH2MHILL**

ect: **0103365** **160660.02.FF.SA**

X0194-025		GRO						
X0194	XG.2001.394-1	NA	4-Bromofluorobenzene-FID	106	% Recovery	1	NA	04/05/01
X0194	XG.2001.394-1	NA	4-Bromofluorobenzene-PID	ND	% Recovery	1	NA	04/05/01
X0194	XG.2001.394-1	NA	aaa-Trifluorotoluene-FID	113	% Recovery	1	NA	04/05/01
X0194	XG.2001.394-1	NA	aaa-Trifluorotoluene-PID	42	% Recovery	1	NA	04/05/01
X0198-001		DRO						
X0198	XG.2001.334-1	NA	O-terphenyl	91	% Recovery	1	NA	03/20/01
X0198-008		DRO						
X0198	XG.2001.338-1	NA	O-terphenyl	85	% Recovery	1	NA	03/21/01
X0198-012		DRO						
X0198	XG.2001.361-1	NA	O-terphenyl	91	% Recovery	1	NA	03/27/01
X0198-017		DRO						
X0198	XG.2001.393-1	NA	O-terphenyl	95	% Recovery	1	NA	04/05/01

QC Type **MS** QC Matrix **SOLID**

QC Group	Run Sequence	CAS #	Analyte	Result	Units	Dilution Factor	Detection Limit	Code	Run Date
X01105-016		8260							
[illegible]05	XG.2001.376-15	NA	1,2 Dichloroethane-D4 (SS)	86	% Recovery	1	NA		03/29/01
X01105	XG.2001.376-15	NA	4-Bromofluorobenzene (SS)	97	% Recovery	1	NA		03/29/01
X01105	XG.2001.376-15	NA	Dibromofluoromethane (SS)	94	% Recovery	1	NA		03/29/01
X01105	XG.2001.376-15	NA	Toluene-D8 (SS)	102	% Recovery	1	NA		03/29/01
X0194-005		GRO							
X0194	XG.2001.325-5	NA	4-Bromofluorobenzene-FID	102	% Recovery	1	NA		03/16/01
X0194	XG.2001.325-5	NA	4-Bromofluorobenzene-PID	82	% Recovery	1	NA		03/16/01
X0194	XG.2001.325-5	NA	aaa-Trifluorotoluene-FID	105	% Recovery	1	NA		03/16/01
X0194	XG.2001.325-5	NA	aaa-Trifluorotoluene-PID	590	% Recovery	1	NA		03/16/01
X0198-005		DRO							
X0198	XG.2001.334-5	NA	O-terphenyl	104	% Recovery	1	NA		03/20/01

QC Type **MSD** QC Matrix **SOLID**

QC Group	Run Sequence	CAS #	Analyte	Result	Units	Dilution Factor	Detection Limit	Code	Run Date
X01105-020		8260							
X01105	XG.2001.376-18	NA	1,2 Dichloroethane-D4 (SS)	88	% Recovery	1	NA		03/30/01
X01105	XG.2001.376-18	NA	4-Bromofluorobenzene (SS)	98	% Recovery	1	NA		03/30/01
X01105	XG.2001.376-18	NA	Dibromofluoromethane (SS)	96	% Recovery	1	NA		03/30/01
X01105	XG.2001.376-18	NA	Toluene-D8 (SS)	102	% Recovery	1	NA		03/30/01
X0194-006		GRO							
[illegible]4	XG.2001.325-6	NA	4-Bromofluorobenzene-FID	103	% Recovery	1	NA		03/16/01
[illegible]94	XG.2001.325-6	NA	4-Bromofluorobenzene-PID	99	% Recovery	1	NA		03/16/01

Surrogate Summary: QC

Client: **CH2MHILL**

Project: **0103365** **160660.02.FF.SA**

X0194	XG.2001.325-6	NA	aaa-Trifluorotoluene-FID	105	% Recovery	1	NA	03/16/01
X0194	XG.2001.325-6	NA	aaa-Trifluorotoluene-PID	219	% Recovery	1	NA	03/16/01
X0198-006		DRO						
X0198	XG.2001.334-6	NA	O-terphenyl	103	% Recovery	1	NA	03/20/01

QC Type **LCS** QC Matrix **WATER**

QC Group	Run Sequence	CAS #	Analyte	Result	Units	Dilution Factor	Detection Limit	Code	Run Date
X01108-008		8260							
X01108	XG.2001.371-4	NA	1,2 Dichloroethane-D4 (SS)	104	% Recovery	1	NA		03/30/01
X01108	XG.2001.371-4	NA	4-Bromofluorobenzene (SS)	101	% Recovery	1	NA		03/30/01
X01108	XG.2001.371-4	NA	Dibromofluoromethane (SS)	105	% Recovery	1	NA		03/30/01
X01108	XG.2001.371-4	NA	Toluene-D8 (SS)	104	% Recovery	1	NA		03/30/01
X01117-008		GRO							
X01117	XG.2001.400-2	NA	4-Bromofluorobenzene-FID	120	% Recovery	1	NA		04/06/01
X01117	XG.2001.400-2	NA	4-Bromofluorobenzene-PID	ND	% Recovery	1	NA		04/06/01
X01117	XG.2001.400-2	NA	aaa-Trifluorotoluene-FID	122	% Recovery	1	NA		04/06/01
X01117	XG.2001.400-2	NA	aaa-Trifluorotoluene-PID	ND	% Recovery	1	NA		04/06/01
X01119-002		DRO							
X01119	XG.2001.393-6	NA	O-terphenyl	109	% Recovery	1	NA		04/05
X0199-002		8270							
X0199	XG.2001.343-2	NA	*2,4,6-TRIBROMOPHENOL	85	% Recovery	1	NA		03/21/01
X0199	XG.2001.343-2	NA	*2-FLUOROBIPHENYL	89	% Recovery	1	NA		03/21/01
X0199	XG.2001.343-2	NA	*2-FLUOROPHENOL	43	% Recovery	1	NA		03/21/01
X0199	XG.2001.343-2	NA	*NITROBENZENE-D5	84	% Recovery	1	NA		03/21/01
X0199	XG.2001.343-2	NA	*PHENOL-D6	32	% Recovery	1	NA		03/21/01
X0199	XG.2001.343-2	NA	*TERPHENYL-D14	86	% Recovery	1	NA		03/21/01

QC Type **LCSD** QC Matrix **WATER**

QC Group	Run Sequence	CAS #	Analyte	Result	Units	Dilution Factor	Detection Limit	Code	Run Date
X01108-009		8260							
X01108	XG.2001.371-5	NA	1,2 Dichloroethane-D4 (SS)	110	% Recovery	1	NA		03/30/01
X01108	XG.2001.371-5	NA	4-Bromofluorobenzene (SS)	102	% Recovery	1	NA		03/30/01
X01108	XG.2001.371-5	NA	Dibromofluoromethane (SS)	107	% Recovery	1	NA		03/30/01
X01108	XG.2001.371-5	NA	Toluene-D8 (SS)	105	% Recovery	1	NA		03/30/01
X01117-009		GRO							
X01117	XG.2001.400-3	NA	4-Bromofluorobenzene-FID	119	% Recovery	1	NA		04/06/01
X01117	XG.2001.400-3	NA	4-Bromofluorobenzene-PID	ND	% Recovery	1	NA		04/06/01
X01117	XG.2001.400-3	NA	aaa-Trifluorotoluene-FID	121	% Recovery	1	NA		04/06/01
X01117	XG.2001.400-3	NA	aaa-Trifluorotoluene-PID	ND	% Recovery	1	NA		04/06/0

Surrogate Summary: QC

Client: CH2MHILL

.ct: 0103365 160660.02.FF.SA

X01119-003		DRO							
X01119	XG.2001.393-7	NA	O-terphenyl	113	% Recovery	1	NA		04/05/01
X0199-003		8270							
X0199	XG.2001.343-3	NA	*2,4,6-TRIBROMOPHENOL	88	% Recovery	1	NA		03/21/01
X0199	XG.2001.343-3	NA	*2-FLUOROBIPHENYL	91	% Recovery	1	NA		03/21/01
X0199	XG.2001.343-3	NA	*2-FLUOROPHENOL	50	% Recovery	1	NA		03/21/01
X0199	XG.2001.343-3	NA	*NITROBENZENE-D5	88	% Recovery	1	NA		03/21/01
X0199	XG.2001.343-3	NA	*PHENOL-D6	36	% Recovery	1	NA		03/21/01
X0199	XG.2001.343-3	NA	*TERPHENYL-D14	93	% Recovery	1	NA		03/21/01

QC Type **MB** QC Matrix **WATER**

QC Group	Run Sequence	CAS #	Analyte	Result	Units	Dilution Factor	Detection Limit	Code	Run Date
X01108-001		8260							
X01108	XG.2001.371-1	NA	1,2 Dichloroethane-D4 (SS)	93	% Recovery	1	NA		03/30/01
X01108	XG.2001.371-1	NA	4-Bromofluorobenzene (SS)	99	% Recovery	1	NA		03/30/01
X01108	XG.2001.371-1	NA	Dibromofluoromethane (SS)	100	% Recovery	1	NA		03/30/01
X01108	XG.2001.371-1	NA	Toluene-D8 (SS)	101	% Recovery	1	NA		03/30/01
X01117-007		GRO							
	XG.2001.400-1	NA	4-Bromofluorobenzene-FID	106	% Recovery	1	NA		04/06/01
X01117	XG.2001.400-1	NA	4-Bromofluorobenzene-PID	ND	% Recovery	1	NA		04/06/01
X01117	XG.2001.400-1	NA	aaa-Trifluorotoluene-FID	116	% Recovery	1	NA		04/06/01
X01117	XG.2001.400-1	NA	aaa-Trifluorotoluene-PID	ND	% Recovery	1	NA		04/06/01
X01119-001		DRO							
X01119	XG.2001.393-5	NA	O-terphenyl	97	% Recovery	1	NA		04/05/01
X0199-001		8270							
X0199	XG.2001.343-1	NA	*2,4,6-TRIBROMOPHENOL	83	% Recovery	1	NA		03/21/01
X0199	XG.2001.343-1	NA	*2-FLUOROBIPHENYL	88	% Recovery	1	NA		03/21/01
X0199	XG.2001.343-1	NA	*2-FLUOROPHENOL	47	% Recovery	1	NA		03/21/01
X0199	XG.2001.343-1	NA	*NITROBENZENE-D5	86	% Recovery	1	NA		03/21/01
X0199	XG.2001.343-1	NA	*PHENOL-D6	34	% Recovery	1	NA		03/21/01
X0199	XG.2001.343-1	NA	*TERPHENYL-D14	89	% Recovery	1	NA		03/21/01
X0199-020		8270							
X0199	XG.2001.374-1	NA	*2,4,6-TRIBROMOPHENOL	83	% Recovery	1	NA		03/29/01
X0199	XG.2001.374-1	NA	*2-FLUOROBIPHENYL	94	% Recovery	1	NA		03/29/01
X0199	XG.2001.374-1	NA	*2-FLUOROPHENOL	51	% Recovery	1	NA		03/29/01
X0199	XG.2001.374-1	NA	*NITROBENZENE-D5	89	% Recovery	1	NA		03/29/01
X0199	XG.2001.374-1	NA	*PHENOL-D6	37	% Recovery	1	NA		03/29/01
X0199	XG.2001.374-1	NA	*TERPHENYL-D14	97	% Recovery	1	NA		03/29/01

Surrogate Summary: QC

Client: **CH2MHILL**

Project: **0103365** **160660.02.FF.SA**

QC Type **MS** QC Matrix **WATER**

QC Group	Run Sequence	CAS #	Analyte	Result	Units	Dilution Factor	Detection Limit	Code	Run Date
X01108-010		8260							
X01108	XG.2001.371-6	NA	1,2 Dichloroethane-D4 (SS)	104	% Recovery	1	NA		03/30/01
X01108	XG.2001.371-6	NA	4-Bromofluorobenzene (SS)	99	% Recovery	1	NA		03/30/01
X01108	XG.2001.371-6	NA	Dibromofluoromethane (SS)	105	% Recovery	1	NA		03/30/01
X01108	XG.2001.371-6	NA	Toluene-D8 (SS)	104	% Recovery	1	NA		03/30/01
X01117-011		GRO							
X01117	XG.2001.400-5	NA	4-Bromofluorobenzene-FID	120	% Recovery	1	NA		04/06/01
X01117	XG.2001.400-5	NA	4-Bromofluorobenzene-PID	1540	% Recovery	1	NA		04/06/01
X01117	XG.2001.400-5	NA	aaa-Trifluorotoluene-FID	117	% Recovery	1	NA		04/06/01
X01117	XG.2001.400-5	NA	aaa-Trifluorotoluene-PID	1390	% Recovery	1	NA		04/06/01
X01119-005		DRO							
X01119	XG.2001.393-9	NA	O-terphenyl	118	% Recovery	1	NA		04/05/01
X0199-005		8270							
X0199	XG.2001.343-6	NA	*2,4,6-TRIBROMOPHENOL	70	% Recovery	1	NA		03/21/01
X0199	XG.2001.343-6	NA	*2-FLUOROBIPHENYL	90	% Recovery	1	NA		03/21/01
X0199	XG.2001.343-6	NA	*2-FLUOROPHENOL	49	% Recovery	1	NA		03/21/[illegible]
X0199	XG.2001.343-6	NA	*NITROBENZENE-D5	92	% Recovery	1	NA		03/21/[illegible]
X0199	XG.2001.343-6	NA	*PHENOL-D6	36	% Recovery	1	NA		03/21/01
X0199	XG.2001.343-6	NA	*TERPHENYL-D14	47	% Recovery	1	NA		03/21/01
X0199-007		8270							
X0199	XG.2001.343-7	NA	*2,4,6-TRIBROMOPHENOL	68	% Recovery	1	NA		03/21/01
X0199	XG.2001.343-7	NA	*2-FLUOROBIPHENYL	81	% Recovery	1	NA		03/21/01
X0199	XG.2001.343-7	NA	*2-FLUOROPHENOL	46	% Recovery	1	NA		03/21/01
X0199	XG.2001.343-7	NA	*NITROBENZENE-D5	86	% Recovery	1	NA		03/21/01
X0199	XG.2001.343-7	NA	*PHENOL-D6	35	% Recovery	1	NA		03/21/01
X0199	XG.2001.343-7	NA	*TERPHENYL-D14	34	% Recovery	1	NA		03/21/01

QC Type **MSD** QC Matrix **WATER**

QC Group	Run Sequence	CAS #	Analyte	Result	Units	Dilution Factor	Detection Limit	Code	Run Date
X01108-011		8260							
X01108	XG.2001.371-7	NA	1,2 Dichloroethane-D4 (SS)	104	% Recovery	1	NA		03/30/01
X01108	XG.2001.371-7	NA	4-Bromofluorobenzene (SS)	101	% Recovery	1	NA		03/30/01
X01108	XG.2001.371-7	NA	Dibromofluoromethane (SS)	105	% Recovery	1	NA		03/30/01
X01108	XG.2001.371-7	NA	Toluene-D8 (SS)	104	% Recovery	1	NA		03/30/01
X01117-012		GRO							
X01117	XG.2001.400-6	NA	4-Bromofluorobenzene-FID	121	% Recovery	1	NA		04/06/01
X01117	XG.2001.400-6	NA	4-Bromofluorobenzene-PID	1420	% Recovery	1	NA		04/06
X01117	XG.2001.400-6	NA	aaa-Trifluorotoluene-FID	121	% Recovery	1	NA		04/06/[illegible]

Surrogate Summary: QC

Client: **CH2MHILL**

ct: **0103365** **160660.02.FF.SA**

X01117	XG.2001.400-6	NA	aaa-Trifluorotoluene-PID	869	% Recovery	1	NA	04/06/01
X01119-006		DRO						
X01119	XG.2001.393-10	NA	O-terphenyl	112	% Recovery	1	NA	04/05/01

Surrogate Summary: Fraction

Client: **CH2MHILL**

Project: **0103365** **160660.02.FF.SA**

Client Sample ID **ST106 SB34 110'** Sample Matrix **SOIL**

QC Group	Run Sequence	CAS #	Analyte	Result	Units	Dilution Factor	Detection Limit	Code	Run Date
0103365-01A		GRO							X0194-015
X0194	XG.2001.364-2	NA	4-Bromofluorobenzene-FID	96	% Recovery	1	NA		03/27/0
X0194	XG.2001.364-2	NA	4-Bromofluorobenzene-PID	72	% Recovery	1	NA		03/27/0
X0194	XG.2001.364-2	NA	aaa-Trifluorotoluene-FID	101	% Recovery	1	NA		03/27/0
X0194	XG.2001.364-2	NA	aaa-Trifluorotoluene-PID	12	% Recovery	1	NA		03/27/0
0103365-01B		DRO							X0198-013
X0198	XG.2001.361-2	NA	O-terphenyl	91	% Recovery	1	NA		03/27/01

Client Sample ID **ST106 SB34 130'** Sample Matrix **SOIL**

QC Group	Run Sequence	CAS #	Analyte	Result	Units	Dilution Factor	Detection Limit	Code	Run Date
0103365-02A		GRO							X0194-016
X0194	XG.2001.364-3	NA	4-Bromofluorobenzene-FID	93	% Recovery	1	NA		03/27/01
X0194	XG.2001.364-3	NA	4-Bromofluorobenzene-PID	ND	% Recovery	1	NA		03/27/
X0194	XG.2001.364-3	NA	aaa-Trifluorotoluene-FID	97	% Recovery	1	NA		03/27/
X0194	XG.2001.364-3	NA	aaa-Trifluorotoluene-PID	ND	% Recovery	1	NA		03/27/01
0103365-02B		DRO							X0198-014
X0198	XG.2001.361-3	NA	O-terphenyl	92	% Recovery	1	NA		03/27/01
0103365-02C		8260							X01105-004
X01105	XG.2001.376-4	NA	1,2 Dichloroethane-D4 (SS)	102	% Recovery	1	NA		03/29/01
X01105	XG.2001.376-4	NA	4-Bromofluorobenzene (SS)	99	% Recovery	1	NA		03/29/01
X01105	XG.2001.376-4	NA	Dibromofluoromethane (SS)	94	% Recovery	1	NA		03/29/01
X01105	XG.2001.376-4	NA	Toluene-D8 (SS)	103	% Recovery	1	NA		03/29/01

Client Sample ID **ST106 SB34 140'** Sample Matrix **SOIL**

QC Group	Run Sequence	CAS #	Analyte	Result	Units	Dilution Factor	Detection Limit	Code	Run Date
0103365-03A		GRO							X0194-017
X0194	XG.2001.364-4	NA	4-Bromofluorobenzene-FID	97	% Recovery	1	NA		03/27/01
X0194	XG.2001.364-4	NA	4-Bromofluorobenzene-PID	230	% Recovery	1	NA		03/27/01
X0194	XG.2001.364-4	NA	aaa-Trifluorotoluene-FID	101	% Recovery	1	NA		03/27/01
X0194	XG.2001.364-4	NA	aaa-Trifluorotoluene-PID	ND	% Recovery	1	NA		03/27/01
0103365-03B		DRO							X0198-015
X0198	XG.2001.361-4	NA	O-terphenyl	93	% Recovery	1	NA		03/27/01

Surrogate Summary: Fraction

Client: CH2MHILL

ct: 0103365 160660.02.FF.SA

Client Sample ID **ST106 SB34 150'** Sample Matrix **SOIL**

QC Group	Run Sequence	CAS #	Analyte	Result	Units	Dilution Factor	Detection Limit	Code	Run Date
0103365-04A		GRO							**X0194-020**
X0194	XG.2001.364-7	NA	4-Bromofluorobenzene-FID	109	% Recovery	1	NA		03/28/01
X0194	XG.2001.364-7	NA	4-Bromofluorobenzene-PID	606	% Recovery	1	NA		03/28/01
X0194	XG.2001.364-7	NA	aaa-Trifluorotoluene-FID	119	% Recovery	1	NA		03/28/01
X0194	XG.2001.364-7	NA	aaa-Trifluorotoluene-PID	109	% Recovery	1	NA		03/28/01
0103365-04B		DRO							**X0198-016**
X0198	XG.2001.361-5	NA	O-terphenyl	94	% Recovery	1	NA		03/27/01

Client Sample ID **EQUIP BLANK** Sample Matrix **H2O**

QC Group	Run Sequence	CAS #	Analyte	Result	Units	Dilution Factor	Detection Limit	Code	Run Date
0103365-05A		GRO							**X01117-010**
X01117	XG.2001.400-4	NA	4-Bromofluorobenzene-FID	111	% Recovery	1	NA		04/06/01
X[illegible]7	XG.2001.400-4	NA	4-Bromofluorobenzene-PID	ND	% Recovery	1	NA		04/06/01
[illegible]	XG.2001.400-4	NA	aaa-Trifluorotoluene-FID	119	% Recovery	1	NA		04/06/01
X01117	XG.2001.400-4	NA	aaa-Trifluorotoluene-PID	ND	% Recovery	1	NA		04/06/01
0103365-05B		DRO							**X01119-004**
X01119	XG.2001.393-8	NA	O-terphenyl	95	% Recovery	1	NA		04/05/01
0103365-05C		8260							**X01108-002**
X01108	XG.2001.371-2	NA	1,2 Dichloroethane-D4 (SS)	96	% Recovery	1	NA		03/30/01
X01108	XG.2001.371-2	NA	4-Bromofluorobenzene (SS)	98	% Recovery	1	NA		03/30/01
X01108	XG.2001.371-2	NA	Dibromofluoromethane (SS)	102	% Recovery	1	NA		03/30/01
X01108	XG.2001.371-2	NA	Toluene-D8 (SS)	102	% Recovery	1	NA		03/30/01
0103365-05D		8270							**X0199-021**
X0199	XG.2001.374-2	NA	*2,4,6-TRIBROMOPHENOL	82	% Recovery	1	NA		03/30/01
X0199	XG.2001.374-2	NA	*2-FLUOROBIPHENYL	88	% Recovery	1	NA		03/30/01
X0199	XG.2001.374-2	NA	*2-FLUOROPHENOL	47	% Recovery	1	NA		03/30/01
X0199	XG.2001.374-2	NA	*NITROBENZENE-D5	84	% Recovery	1	NA		03/30/01
X0199	XG.2001.374-2	NA	*PHENOL-D6	35	% Recovery	1	NA		03/30/01
X0199	XG.2001.374-2	NA	*TERPHENYL-D14	86	% Recovery	1	NA		03/30/01

Client Sample ID **TRIP BLANK** Sample Matrix **H2O**

QC Group	Run Sequence	CAS #	Analyte	Result	Units	Dilution Factor	Detection Limit	Code	Run Date
0103365-06A		8260							**X01108-003**
[illegible]	XG.2001.371-3	NA	1,2 Dichloroethane-D4 (SS)	99	% Recovery	1	NA		03/30/01

Surrogate Summary: Fraction

Client: **CH2MHILL**

Project: **0103365** **160660.02.FF.SA**

X01108	XG.2001.371-3	NA	4-Bromofluorobenzene (SS)	100	% Recovery	1	NA		03/30/0
X01108	XG.2001.371-3	NA	Dibromofluoromethane (SS)	103	% Recovery	1	NA		03/30/0
X01108	XG.2001.371-3	NA	Toluene-D8 (SS)	102	% Recovery	1	NA		03/30/0

ASSAIGAI
ANALYTICAL
LABORATORIES, INC.
7300 Jefferson, NE • Albuquerque, New Mexico 87109 • (505) 345-8964 • FAX (505) 345-7259
3332 Wedgewood Dr., Suite N • El Paso, Texas 79925 • (915) 593-6000 • FAX (915) 593-7820
127 Eastgate Drive, 212-C • Los Alamos, New Mexico 87544 • (505) 662-255

RECEIVED MAR 27 2001

Explanation of codes

B	*analyte detected in Method Blank*
E	*result is estimated*
H	*analyzed out of hold time*
N	*tentatively identified compound*
S	*subcontracted*
1-9	*see footnote*

CH2M HILL
attn: **SHARON MINCHAK**
6001 INDIAN SCHOOL RD NE STE 350
ALBUQUERQUE, NM 87110-4140

Assaigai Analytical Laboratories, Inc.

Certificate of Analysis

Client: **CH2M HILL**
Project: **0103281 KAFB.DO23**

William P. Biava: President of Assaigai Analytical Laboratories, Inc.

Client Sample ID: ***ST106 SB33 270'*** Sample Matrix: ***SOIL*** Sample Collected: ***03/19/01 17:35:00***

Group	Run Sequence	CAS #	Analyte	Result	Units	Dilution Factor	Detection Limit	Code	Run Date
0103281-01A		**SW846 5030A/8015A GRO by GC/FID**							
X0194	XG.2001.337-2		Gasoline Range Organics	ND	mg / Kg	1	0.25		03/21/01
0103281-01B		**SW846 8260A Purgeable VOCs by GC/MS**							
X0190	XG.2001.339-2	75-34-3	1,1 Dichloroethane	ND	mg / Kg	1	0.005		03/21/01
X0190	XG.2001.339-2	75-34-3	1,1 Dichloroethene	ND	mg / Kg	1	0.005		03/21/01
X0190	XG.2001.339-2	71-55-6	1,1,1 Trichloroethane	ND	mg / Kg	1	0.005		03/21/01
X0190	XG.2001.339-2	630-20-6	1,1,1,2 Tetrachloroethane	ND	mg / Kg	1	0.005		03/21/01
X0190	XG.2001.339-2	79-00-5	1,1,2 Trichloroethane	ND	mg / Kg	1	0.005		03/21/01
X0190	XG.2001.339-2	79-34-5	1,1,2,2 Tetrachloroethane	ND	mg / Kg	1	0.005		03/21/01
X0190	XG.2001.339-2	106-93-4	1,2 Dibromoethane (EDB)	ND	mg / Kg	1	0.005		03/21/01
X0190	XG.2001.339-2	95-50-1	1,2 Dichlorobenzene	ND	mg / Kg	1	0.005		03/21/01
X0190	XG.2001.339-2	107-06-2	1,2 Dichloroethane	ND	mg / Kg	1	0.005		03/21/01
X0190	XG.2001.339-2	78-87-5	1,2 Dichloropropane	ND	mg / Kg	1	0.005		03/21/01
X0190	XG.2001.339-2	96-18-4	1,2,3 Trichloropropane	ND	mg / Kg	1	0.005		03/21/01
X0190	XG.2001.339-2	95-63-6	1,2,4-Trimethylbenzene	ND	mg / Kg	1	0.005		03/21/01
X0190	XG.2001.339-2	541-73-1	1,3 Dichlorobenzene	ND	mg / Kg	1	0.005		03/21/01
X0190	XG.2001.339-2	108-67-8	1,3,5-Trimethylbenzene	ND	mg / Kg	1	0.005		03/21/01
X0190	XG.2001.339-2	764-41-0	1,4 Dichloro-2-butene	ND	mg / Kg	1	0.05		03/21/01
X0190	XG.2001.339-2	106-46-7	1,4 Dichlorobenzene	ND	mg / Kg	1	0.005		03/21/01
X0190	XG.2001.339-2	78-93-3	2-Butanone (MEK)	ND	mg / Kg	1	0.025		03/21/01
X0190	XG.2001.339-2	110-75-8	2-Chloroethylvinylether	ND	mg / Kg	1	0.025		03/21/01
X0190	XG.2001.339-2	591-78-6	2-Hexanone (MBK)	ND	mg / Kg	1	0.025		03/21/01
X0190	XG.2001.339-2	108-10-1	4-Methyl-2-pentanone (MIBK)	ND	mg / Kg	1	0.025		03/21/01

Member
American Council of
Independent Laboratories, Inc.

REPRODUCTION OF THIS REPORT IN LESS THAN FULL REQUIRES THE WRITTEN CONSENT OF AAL
THIS REPORT MAY NOT BE USED IN ANY MANNER BY THE CLIENT OR ANY OTHER THIRD PARTY TO CLAIM
PRODUCT ENDORSEMENT BY ANY ACCREDITATION PROGRAM

Certificate of Analysis

Client: **CH2M HILL**

Project: **0103281** **KAFB.DO23**

X0190	XG.2001.339-2	67-64-1	Acetone	ND	mg / Kg	1	0.05		03/21/01
X0190	XG.2001.339-2	107-02-8	Acrolein	ND	mg / Kg	1	0.1		03/21/01
X0190	XG.2001.339-2	107-13-1	Acrylonitrile	ND	mg / Kg	1	0.1		03/21/01
X0190	XG.2001.339-2	71-43-2	Benzene	ND	mg / Kg	1	0.005		03/21/01
X0190	XG.2001.339-2	75-27-4	Bromodichloromethane	ND	mg / Kg	1	0.005		03/21/01
X0190	XG.2001.339-2	75-25-2	Bromoform	ND	mg / Kg	1	0.005		03/21/01
X0190	XG.2001.339-2	74-83-9	Bromomethane	ND	mg / Kg	1	0.025		03/21/01
X0190	XG.2001.339-2	75-15-0	Carbon disulfide	ND	mg / Kg	1	0.025		03/21/01
X0190	XG.2001.339-2	56-23-5	Carbon tetrachloride	ND	mg / Kg	1	0.005		03/21/01
X0190	XG.2001.339-2	108-90-7	Chlorobenzene	ND	mg / Kg	1	0.005		03/21/01
X0190	XG.2001.339-2	124-48-1	Chlorodibromomethane	ND	mg / Kg	1	0.005		03/21/01
X0190	XG.2001.339-2	75-00-3	Chloroethane	ND	mg / Kg	1	0.025		03/21/01
X0190	XG.2001.339-2	67-66-3	Chloroform	ND	mg / Kg	1	0.005		03/21/01
X0190	XG.2001.339-2	74-87-3	Chloromethane	ND	mg / Kg	1	0.025		03/21/01
X0190	XG.2001.339-2	156-59-2	cis-1,2 dichloroethene	ND	mg / Kg	1	0.005		03/21/01
X0190	XG.2001.339-2	10061-01-5	cis-1,3 dichloropropene	ND	mg / Kg	1	0.005		03/21/01
X0190	XG.2001.339-2	74-95-3	Dibromomethane	ND	mg / Kg	1	0.005		03/21/01
X0190	XG.2001.339-2	97-63-2	Ethyl methacrylate	ND	mg / Kg	1	0.025		03/21/01
X0190	XG.2001.339-2	100-41-4	Ethylbenzene	ND	mg / Kg	1	0.005		03/21/01
X0190	XG.2001.339-2		Freon 113	ND	mg / Kg	1	0.025		03/21/01
X0190	XG.2001.339-2	75-71-8	Freon 12	ND	mg / Kg	1	0.05		03/21/01
X0190	XG.2001.339-2	74-88-4	Iodomethane	ND	mg / Kg	1	0.025		03/21/01
X0190	XG.2001.339-2	1634-04-4	Methyl t-butyl ether (MTBE)	ND	mg / Kg	1	0.005		03/21/01
X0190	XG.2001.339-2	75-09-2	Methylene chloride	ND	mg / Kg	1	0.05		03/21
X0190	XG.2001.339-2	91-20-3	Naphthalene	ND	mg / Kg	1	0.025		03/21/01
X0190	XG.2001.339-2	95-47-6	o-Xylene	ND	mg / Kg	1	0.005		03/21/01
X0190	XG.2001.339-2	108-38-3/106-42	p/m Xylenes	ND	mg / Kg	1	0.01		03/21/01
X0190	XG.2001.339-2	100-42-5	Styrene	ND	mg / Kg	1	0.005		03/21/01
X0190	XG.2001.339-2	156-60-5	t-1,2 Dichloroethene	ND	mg / Kg	1	0.005		03/21/01
X0190	XG.2001.339-2	10061-02-6	t-1,3 Dichloropropene	ND	mg / Kg	1	0.005		03/21/01
X0190	XG.2001.339-2	127-18-4	Tetrachloroethene	ND	mg / Kg	1	0.005		03/21/01
X0190	XG.2001.339-2	108-88-3	Toluene	ND	mg / Kg	1	0.005		03/21/01
X0190	XG.2001.339-2	79-01-6	Trichloroethene	ND	mg / Kg	1	0.005		03/21/01
X0190	XG.2001.339-2	75-69-4	Trichlorofluoromethane	ND	mg / Kg	1	0.025		03/21/01
X0190	XG.2001.339-2	108-05-4	Vinyl acetate	ND	mg / Kg	1	0.025		03/21/01
X0190	XG.2001.339-2	75-01-4	Vinyl chloride	ND	mg / Kg	1	0.025		03/21/01

0103281-01C **SW846 ME/8015A Diesel Range Organics by GC/FID**

X0198	XG.2001.338-2		Diesel Range Organics	ND	mg / Kg	1	25		03/21/01

Client Sample ID ***ST106 SB33 280'*** Sample Matrix ***SOIL*** Sample Collected *03/19/01 18:15:00*

QC Group	Run Sequence	CAS #	Analyte	Result	Units	Dilution Factor	Detection Limit	Code	Run Date

0103281-02A **SW846 5030A/8015A GRO by GC/FID**

X0194	XG.2001.337-3		Gasoline Range Organics	ND	mg / Kg	1	0.25		03/21/01

Certificate of Analysis

nt: **CH2M HILL**

Project: **0103281** **KAFB.DO23**

0103281-02B **SW846 8260A Purgeable VOCs by GC/MS**

X0190	XG.2001.339-3	75-34-3	1,1 Dichloroethane	ND	mg / Kg	1	0.005		03/21/01
X0190	XG.2001.339-3	75-34-3	1,1 Dichloroethene	ND	mg / Kg	1	0.005		03/21/01
X0190	XG.2001.339-3	71-55-6	1,1,1 Trichloroethane	ND	mg / Kg	1	0.005		03/21/01
X0190	XG.2001.339-3	630-20-6	1,1,1,2 Tetrachloroethane	ND	mg / Kg	1	0.005		03/21/01
X0190	XG.2001.339-3	79-00-5	1,1,2 Trichloroethane	ND	mg / Kg	1	0.005		03/21/01
X0190	XG.2001.339-3	79-34-5	1,1,2,2 Tetrachloroethane	ND	mg / Kg	1	0.005		03/21/01
X0190	XG.2001.339-3	106-93-4	1,2 Dibromoethane (EDB)	ND	mg / Kg	1	0.005		03/21/01
X0190	XG.2001.339-3	95-50-1	1,2 Dichlorobenzene	ND	mg / Kg	1	0.005		03/21/01
X0190	XG.2001.339-3	107-06-2	1,2 Dichloroethane	ND	mg / Kg	1	0.005		03/21/01
X0190	XG.2001.339-3	78-87-5	1,2 Dichloropropane	ND	mg / Kg	1	0.005		03/21/01
X0190	XG.2001.339-3	96-18-4	1,2,3 Trichloropropane	ND	mg / Kg	1	0.005		03/21/01
X0190	XG.2001.339-3	95-63-6	1,2,4-Trimethylbenzene	ND	mg / Kg	1	0.005		03/21/01
X0190	XG.2001.339-3	541-73-1	1,3 Dichlorobenzene	ND	mg / Kg	1	0.005		03/21/01
X0190	XG.2001.339-3	108-67-8	1,3,5-Trimethylbenzene	ND	mg / Kg	1	0.005		03/21/01
X0190	XG.2001.339-3	764-41-0	1,4 Dichloro-2-butene	ND	mg / Kg	1	0.05		03/21/01
X0190	XG.2001.339-3	106-46-7	1,4 Dichlorobenzene	ND	mg / Kg	1	0.005		03/21/01
X0190	XG.2001.339-3	78-93-3	2-Butanone (MEK)	ND	mg / Kg	1	0.025		03/21/01
X0190	XG.2001.339-3	110-75-8	2-Chloroethylvinylether	ND	mg / Kg	1	0.025		03/21/01
X0190	XG.2001.339-3	591-78-6	2-Hexanone (MBK)	ND	mg / Kg	1	0.025		03/21/01
X0190	XG.2001.339-3	108-10-1	4-Methyl-2-pentanone (MIBK)	ND	mg / Kg	1	0.025		03/21/01
X0190	XG.2001.339-3	67-64-1	Acetone	0.091	mg / Kg	1	0.05		03/21/01
[illegible]	XG.2001.339-3	107-02-8	Acrolein	ND	mg / Kg	1	0.1		03/21/01
X0190	XG.2001.339-3	107-13-1	Acrylonitrile	ND	mg / Kg	1	0.1		03/21/01
X0190	XG.2001.339-3	71-43-2	Benzene	ND	mg / Kg	1	0.005		03/21/01
X0190	XG.2001.339-3	75-27-4	Bromodichloromethane	ND	mg / Kg	1	0.005		03/21/01
X0190	XG.2001.339-3	75-25-2	Bromoform	ND	mg / Kg	1	0.005		03/21/01
X0190	XG.2001.339-3	74-83-9	Bromomethane	ND	mg / Kg	1	0.025		03/21/01
X0190	XG.2001.339-3	75-15-0	Carbon disulfide	ND	mg / Kg	1	0.025		03/21/01
X0190	XG.2001.339-3	56-23-5	Carbon tetrachloride	ND	mg / Kg	1	0.005		03/21/01
X0190	XG.2001.339-3	108-90-7	Chlorobenzene	ND	mg / Kg	1	0.005		03/21/01
X0190	XG.2001.339-3	124-48-1	Chlorodibromomethane	ND	mg / Kg	1	0.005		03/21/01
X0190	XG.2001.339-3	75-00-3	Chloroethane	ND	mg / Kg	1	0.025		03/21/01
X0190	XG.2001.339-3	67-66-3	Chloroform	ND	mg / Kg	1	0.005		03/21/01
X0190	XG.2001.339-3	74-87-3	Chloromethane	ND	mg / Kg	1	0.025		03/21/01
X0190	XG.2001.339-3	156-59-2	cis-1,2 dichloroethene	ND	mg / Kg	1	0.005		03/21/01
X0190	XG.2001.339-3	10061-01-5	cis-1,3 dichloropropene	ND	mg / Kg	1	0.005		03/21/01
X0190	XG.2001.339-3	74-95-3	Dibromomethane	ND	mg / Kg	1	0.005		03/21/01
X0190	XG.2001.339-3	97-63-2	Ethyl methacrylate	ND	mg / Kg	1	0.025		03/21/01
X0190	XG.2001.339-3	100-41-4	Ethylbenzene	ND	mg / Kg	1	0.005		03/21/01
X0190	XG.2001.339-3		Freon 113	ND	mg / Kg	1	0.025		03/21/01
X0190	XG.2001.339-3	75-71-8	Freon 12	ND	mg / Kg	1	0.05		03/21/01
X0190	XG.2001.339-3	74-88-4	Iodomethane	ND	mg / Kg	1	0.025		03/21/01
X0190	XG.2001.339-3	1634-04-4	Methyl t-butyl ether (MTBE)	ND	mg / Kg	1	0.005		03/21/01
X0190	XG.2001.339-3	75-09-2	Methylene chloride	ND	mg / Kg	1	0.05		03/21/01
X0190	XG.2001.339-3	91-20-3	Naphthalene	ND	mg / Kg	1	0.025		03/21/01
X0190	XG.2001.339-3	95-47-6	o-Xylene	ND	mg / Kg	1	0.005		03/21/01

RECEIVED MAR 2 7 2001

Assaigai Analytical Laboratories, Inc.

Certificate of Analysis

Client: **CH2M HILL**

Project: **0103281** **KAFB.DO23**

X0190	XG.2001.339-3	108-38-3/106-42	p/m Xylenes	ND	mg / Kg	1	0.01		03/21/01
X0190	XG.2001.339-3	100-42-5	Styrene	ND	mg / Kg	1	0.005		03/21/01
X0190	XG.2001.339-3	156-60-5	t-1,2 Dichloroethene	ND	mg / Kg	1	0.005		03/21/01
X0190	XG.2001.339-3	10061-02-6	t-1,3 Dichloropropene	ND	mg / Kg	1	0.005		03/21/01
X0190	XG.2001.339-3	127-18-4	Tetrachloroethene	ND	mg / Kg	1	0.005		03/21/01
X0190	XG.2001.339-3	108-88-3	Toluene	ND	mg / Kg	1	0.005		03/21/01
X0190	XG.2001.339-3	79-01-6	Trichloroethene	ND	mg / Kg	1	0.005		03/21/01
X0190	XG.2001.339-3	75-69-4	Trichlorofluoromethane	ND	mg / Kg	1	0.025		03/21/01
X0190	XG.2001.339-3	108-05-4	Vinyl acetate	ND	mg / Kg	1	0.025		03/21/01
X0190	XG.2001.339-3	75-01-4	Vinyl chloride	ND	mg / Kg	1	0.025		03/21/01

0103281-02C **SW846 ME/8015A Diesel Range Organics by GC/FID**

X0198	XG.2001.338-3		Diesel Range Organics	ND	mg / Kg	1	25		03/21/01

Client Sample ID ***ST106 SB33 310'*** Sample Matrix ***SOIL*** Sample Collected ***03/20/01 12:45:00***

QC Group	Run Sequence	CAS #	Analyte	Result	Units	Dilution Factor	Detection Limit	Code	Run Date
0103281-03A		**SW846 5030A/8015A GRO by GC/FID**							
X0194	XG.2001.337-4		Gasoline Range Organics	ND	mg / Kg	1	0.25		03/21/01
0103281-03B		**SW846 ME/8015A Diesel Range Organics by GC/FID**							
X0198	XG.2001.338-4		Diesel Range Organics	65	mg / Kg	1	25		03/21/01

**** Sample specific Detection Limit is determined by multiplying the sample Dilution Factor by the listed Reporting Detection Limit. ****

**** ND = Not detected: less than the sample specific Detection Limit. Results relate only to the items tested. ****

A IGAI ANALYTICAL LABORATORIES, INC.

Chain of Cust dy Record

7300 JEFFERSON N.E.
ALBUQUERQUE, NEW MEXICO 87
(505) 345-8964

3332 WEDGEWOOD
EL PASO, TEXAS 79925
(915) 593-6000

127 EASTGATE DRIVE, 212-C
LOS ALAMOS, NEW MEXICO 87544
(505) 662-2558

Lab Job No.: 0103281 Date 3-20-01

Page 1 of 1

Client CH2M HILL

Address 6001 Indian School RD # 350

City / State / Zip ABQ NM 87110

Project Name / Number KAFB · D023

Contract / Purchase Order / Quote

Project Manager / Contact Halloran / LiFEVRE

Telephone No. 884-5600

Fax No. 883-7507

Samplers: (signature) Wm J LiFevre

AAL Fraction Number	Field Sample Number / Location	Date	Time	Sample Type	Type / Size of Container	Preservation Temp.	Preservation Chemical	No. of Containers	GRO	DRO	VOL							Remarks
[illegible]	ST 106 5833 270'	3-19	1735	Soil	4oz	ice	—	3	X	X	X							
[illegible]	ST 106 5833 280'	3-19	1815	Soil	4oz	ice	—	3	X	X	X							
[illegible]	ST 106 5833 310'	3-20	1245	Soil	4oz	ice	—	2	X	X								

Relinquished by:
Signature Wm J LiFevre
Printed Wm J LiFevre
Company CH2M HILL
Reason XFR TO LAB Courier

Date 3-20-01
Time 1500

Received by:
Signature [illegible]
Printed [illegible]
Company [illegible]
Reason [illegible]

Relinquished by:
Signature
Printed
Company
Reason

Date
Time

Received by:
Signature
Printed
Company
Reason

Method of Shipment:
Shipment No.
Special Instructions:

Comments: 24 HR TAT

After analysis, samples are to be:
- ☐ Disposed of (additional fee)
- ☐ Stored (30 days max)
- ☐ Stored over 30 days (additional fee)
- ☐ Returned to customer

COURIER

ASSAIGAI
ANALYTICAL
LABORATORIES, INC.

7300 Jefferson, NE • Albuquerque, New Mexico 87109 • (505) 345-8964 • FAX (505) 345-7259
3332 Wedgewood Dr., Suite N • El Paso, Texas 79925 • (915) 593-6000 • FAX (915) 593-7820
127 Eastgate Drive, 212-C • Los Alamos, New Mexico 87544 • (505) 662-2558

RECEIVED APR 1 1 2001

Explanation of codes

B	*analyte detected in Method Blank*
E	*result is estimated*
H	*analyzed out of hold time*
N	*tentatively identified compound*
S	*subcontracted*
1-9	*see footnote*

CH2MHILL
attn: **AMY HALLORAN**
6001 INDIAN SCHOOL RD NE STE 350
ALBUQUERQUE, NM 87110-4140

Assaigai Analytical Laboratories, Inc.

Certificate of Analysis

Client: **CH2MHILL**
Project: **0103365** **160660.02.FF.SA**

William P. Biava: President of Assaigai Analytical Laboratories, Inc.

Client Sample ID ***ST106 SB34 110'*** Sample Matrix ***SOIL*** Sample Collected ***03/24/01 14:48:00***

QC Group	Run Sequence	CAS #	Analyte	Result	Units	Dilution Factor	Detection Limit	Code	Run Date
0103365-01A		**SW846 5030A/8015A GRO by GC/FID**							
X0194	XG.2001.364-2		Gasoline Range Organics	ND	mg / Kg	1	0.25		03/27/01
0103365-01B		**SW846 ME/8015A Diesel Range Organics by GC/FID**							
X0198	XG.2001.361-2		Diesel Range Organics	ND	mg / Kg	1	25		03/27/01

Client Sample ID ***ST106 SB34 130'*** Sample Matrix ***SOIL*** Sample Collected ***03/25/01 08:00:00***

QC Group	Run Sequence	CAS #	Analyte	Result	Units	Dilution Factor	Detection Limit	Code	Run Date
0103365-02A		**SW846 5030A/8015A GRO by GC/FID**							
X0194	XG.2001.364-3		Gasoline Range Organics	ND	mg / Kg	1	0.25		03/27/01
0103365-02B		**SW846 ME/8015A Diesel Range Organics by GC/FID**							
X0198	XG.2001.361-3		Diesel Range Organics	ND	mg / Kg	1	25		03/27/01
0103365-02C		**SW846 8260A Purgeable VOCs by GC/MS**							
X01105	XG.2001.376-4	75-34-3	1,1 Dichloroethane	ND	mg / Kg	1	0.005		03/29/01
X01105	XG.2001.376-4	75-34-3	1,1 Dichloroethene	ND	mg / Kg	1	0.005		03/29/01
X01105	XG.2001.376-4	71-55-6	1,1,1 Trichloroethane	ND	mg / Kg	1	0.005		03/29/01
[illegible]5	XG.2001.376-4	630-20-6	1,1,1,2 Tetrachloroethane	ND	mg / Kg	1	0.005		03/29/01
[illegible]05	XG.2001.376-4	79-00-5	1,1,2 Trichloroethane	ND	mg / Kg	1	0.005		03/29/01

Member:
American Council of
Independent Laboratories, Inc.

REPRODUCTION OF THIS REPORT IN LESS THAN FULL REQUIRES THE WRITTEN CONSENT OF AAL
THIS REPORT MAY NOT BE USED IN ANY MANNER BY THE CLIENT OR ANY OTHER THIRD PARTY TO CLAIM
PRODUCT ENDORSEMENT BY ANY ACCREDITATION PROGRAM

Certificate of Analysis

RECEIVED APR 1 1 2001

Client: **CH2MHILL**

Project: **0103365** **160660.02.FF.SA**

X01105	XG.2001.376-4	79-34-5	1,1,2,2 Tetrachloroethane	ND	mg / Kg	1	0.005	03/29 01
X01105	XG.2001.376-4	106-93-4	1,2 Dibromoethane (EDB)	ND	mg / Kg	1	0.005	03/29 01
X01105	XG.2001.376-4	95-50-1	1,2 Dichlorobenzene	ND	mg / Kg	1	0.005	03/29 01
X01105	XG.2001.376-4	107-06-2	1,2 Dichloroethane	ND	mg / Kg	1	0.005	03/29 01
X01105	XG.2001.376-4	78-87-5	1,2 Dichloropropane	ND	mg / Kg	1	0.005	03/29 01
X01105	XG.2001.376-4	96-18-4	1,2,3 Trichloropropane	ND	mg / Kg	1	0.005	03/29 01
X01105	XG.2001.376-4	95-63-6	1,2,4-Trimethylbenzene	ND	mg / Kg	1	0.005	03/29 01
X01105	XG.2001.376-4	541-73-1	1,3 Dichlorobenzene	ND	mg / Kg	1	0.005	03/29 01
X01105	XG.2001.376-4	108-67-8	1,3,5-Trimethylbenzene	ND	mg / Kg	1	0.005	03/29 01
X01105	XG.2001.376-4	764-41-0	1,4 Dichloro-2-butene	ND	mg / Kg	1	0.05	03/29 01
X01105	XG.2001.376-4	106-46-7	1,4 Dichlorobenzene	ND	mg / Kg	1	0.005	03/29 01
X01105	XG.2001.376-4	78-93-3	2-Butanone (MEK)	ND	mg / Kg	1	0.025	03/29 01
X01105	XG.2001.376-4	110-75-8	2-Chloroethylvinylether	ND	mg / Kg	1	0.025	03/29 01
X01105	XG.2001.376-4	591-78-6	2-Hexanone (MBK)	ND	mg / Kg	1	0.025	03/29 01
X01105	XG.2001.376-4	108-10-1	4-Methyl-2-pentanone (MIBK)	ND	mg / Kg	1	0.025	03/29 01
X01105	XG.2001.376-4	67-64-1	Acetone	ND	mg / Kg	1	0.05	03/29 01
X01105	XG.2001.376-4	107-02-8	Acrolein	ND	mg / Kg	1	0.1	03/29 01
X01105	XG.2001.376-4	107-13-1	Acrylonitrile	ND	mg / Kg	1	0.1	03/29 01
X01105	XG.2001.376-4	71-43-2	Benzene	ND	mg / Kg	1	0.005	03/29 01
X01105	XG.2001.376-4	75-27-4	Bromodichloromethane	ND	mg / Kg	1	0.005	03/29 01
X01105	XG.2001.376-4	75-25-2	Bromoform	ND	mg / Kg	1	0.005	03/29 01
X01105	XG.2001.376-4	74-83-9	Bromomethane	ND	mg / Kg	1	0.025	03/29 01
X01105	XG.2001.376-4	75-15-0	Carbon disulfide	ND	mg / Kg	1	0.025	03/29
X01105	XG.2001.376-4	56-23-5	Carbon tetrachloride	ND	mg / Kg	1	0.005	03/29
X01105	XG.2001.376-4	108-90-7	Chlorobenzene	ND	mg / Kg	1	0.005	03/29 01
X01105	XG.2001.376-4	124-48-1	Chlorodibromomethane	ND	mg / Kg	1	0.005	03/29 01
X01105	XG.2001.376-4	75-00-3	Chloroethane	ND	mg / Kg	1	0.025	03/29 01
X01105	XG.2001.376-4	67-66-3	Chloroform	ND	mg / Kg	1	0.005	03/29 01
X01105	XG.2001.376-4	74-87-3	Chloromethane	ND	mg / Kg	1	0.025	03/29 01
X01105	XG.2001.376-4	156-59-2	cis-1,2 dichloroethene	ND	mg / Kg	1	0.005	03/29 01
X01105	XG.2001.376-4	10061-01-5	cis-1,3 dichloropropene	ND	mg / Kg	1	0.005	03/29 01
X01105	XG.2001.376-4	74-95-3	Dibromomethane	ND	mg / Kg	1	0.005	03/29 01
X01105	XG.2001.376-4	97-63-2	Ethyl methacrylate	ND	mg / Kg	1	0.025	03/29 01
X01105	XG.2001.376-4	100-41-4	Ethylbenzene	ND	mg / Kg	1	0.005	03/29 01
X01105	XG.2001.376-4		Freon 113	ND	mg / Kg	1	0.025	03/29 01
X01105	XG.2001.376-4	75-71-8	Freon 12	ND	mg / Kg	1	0.05	03/29 01
X01105	XG.2001.376-4	74-88-4	Iodomethane	ND	mg / Kg	1	0.025	03/29 01
X01105	XG.2001.376-4	1634-04-4	Methyl t-butyl ether (MTBE)	ND	mg / Kg	1	0.005	03/29 01
X01105	XG.2001.376-4	75-09-2	Methylene chloride	ND	mg / Kg	1	0.05	03/29 01
X01105	XG.2001.376-4	91-20-3	Naphthalene	ND	mg / Kg	1	0.025	03/29 01
X01105	XG.2001.376-4	95-47-6	o-Xylene	ND	mg / Kg	1	0.005	03/29 01
X01105	XG.2001.376-4	108-38-3/106-42	p/m Xylenes	ND	mg / Kg	1	0.01	03/29 01
X01105	XG.2001.376-4	100-42-5	Styrene	ND	mg / Kg	1	0.005	03/29 01
X01105	XG.2001.376-4	156-60-5	t-1,2 Dichloroethene	ND	mg / Kg	1	0.005	03/29 01
X01105	XG.2001.376-4	10061-02-6	t-1,3 Dichloropropene	ND	mg / Kg	1	0.005	03/29 01
X01105	XG.2001.376-4	127-18-4	Tetrachloroethene	ND	mg / Kg	1	0.005	03/29 01
X01105	XG.2001.376-4	108-88-3	Toluene	ND	mg / Kg	1	0.005	03/29 01
X01105	XG.2001.376-4	79-01-6	Trichloroethene	ND	mg / Kg	1	0.005	03/29

Certificate of Analysis

Client: **CH2MHILL**

Project: **0103365** **160660.02.FF.SA**

X01105	XG.2001.376-4	75-69-4	Trichlorofluoromethane	ND	mg / Kg	1	0.025		03/29/01
X01105	XG.2001.376-4	108-05-4	Vinyl acetate	ND	mg / Kg	1	0.025		03/29/01
X01105	XG.2001.376-4	75-01-4	Vinyl chloride	ND	mg / Kg	1	0.025		03/29/01

Client Sample ID ***ST106 SB34 140'*** Sample Matrix ***SOIL*** Sample Collected ***03/25/01 08:40:00***

QC Group	Run Sequence	CAS #	Analyte	Result	Units	Dilution Factor	Detection Limit	Code	Run Date
0103365-03A		**SW846 5030A/8015A GRO by GC/FID**							
X0194	XG.2001.364-4		Gasoline Range Organics	ND	mg / Kg	1	0.25		03/27/01
0103365-03B		**SW846 ME/8015A Diesel Range Organics by GC/FID**							
X0198	XG.2001.361-4		Diesel Range Organics	ND	mg / Kg	1	25		03/27/01

Client Sample ID ***ST106 SB34 150'*** Sample Matrix ***SOIL*** Sample Collected ***03/25/01 09:45:00***

QC Group	Run Sequence	CAS #	Analyte	Result	Units	Dilution Factor	Detection Limit	Code	Run Date
0103365-04A		**SW846 5030A/8015A GRO by GC/FID**							
X0194	XG.2001.364-7		Gasoline Range Organics	ND	mg / Kg	1	0.25		03/28/01
0103365-04B		**SW846 ME/8015A Diesel Range Organics by GC/FID**							
X0198	XG.2001.361-5		Diesel Range Organics	ND	mg / Kg	1	25		03/27/01

Client Sample ID ***EQUIP BLANK*** Sample Matrix ***H2O*** Sample Collected ***03/25/01 10:10:00***

QC Group	Run Sequence	CAS #	Analyte	Result	Units	Dilution Factor	Detection Limit	Code	Run Date
0103365-05A		**SW846 5030A/8015A GRO by GC/FID**							
X01117	XG.2001.400-4		Gasoline Range Organics	ND	mg / L	1	0.05		04/06/01
0103365-05B		**SW846 ME/8015A Diesel Range Organics by GC/FID**							
X01119	XG.2001.393-8		Diesel Range Organics	ND	mg / L	1	25		04/05/01
0103365-05C		**SW846 8260A Purgeable VOCs by GC/MS**							
X01108	XG.2001.371-2	75-34-3	1,1 Dichloroethane	ND	ug / L	1	1		03/30/01
X01108	XG.2001.371-2	75-34-3	1,1 Dichloroethene	ND	ug / L	1	1		03/30/01
X01108	XG.2001.371-2	71-55-6	1,1,1 Trichloroethane	ND	ug / L	1	1		03/30/01
X01108	XG.2001.371-2	630-20-6	1,1,1,2 Tetrachloroethane	ND	ug / L	1	1		03/30/01
X01108	XG.2001.371-2	79-00-5	1,1,2 Trichloroethane	ND	ug / L	1	1		03/30/01
[illegible]08	XG.2001.371-2	79-34-5	1,1,2,2 Tetrachloroethane	ND	ug / L	1	1		03/30/01
[illegible]08	XG.2001.371-2	106-93-4	1,2 Dibromoethane (EDB)	ND	ug / L	1	1		03/30/01

Certificate of Analysis

Client: **CH2MHILL**

Project: **0103365** **160660.02.FF.SA**

X01108	XG.2001.371-2	95-50-1	1,2 Dichlorobenzene	ND	ug / L	1	1		03/30/01
X01108	XG.2001.371-2	107-06-2	1,2 Dichloroethane	ND	ug / L	1	1		03/30/01
X01108	XG.2001.371-2	78-87-5	1,2 Dichloropropane	ND	ug / L	1	1		03/30/01
X01108	XG.2001.371-2	96-18-4	1,2,3 Trichloropropane	ND	ug / L	1	1		03/30/01
X01108	XG.2001.371-2	95-63-6	1,2,4-Trimethylbenzene	ND	ug / L	1	1		03/30/01
X01108	XG.2001.371-2	541-73-1	1,3 Dichlorobenzene	ND	ug / L	1	1		03/30/01
X01108	XG.2001.371-2	108-67-8	1,3,5-Trimethylbenzene	ND	ug / L	1	1		03/30/01
X01108	XG.2001.371-2	764-41-0	1,4 Dichloro-2-butene	ND	ug / L	1	10		03/30/01
X01108	XG.2001.371-2	106-46-7	1,4 Dichlorobenzene	ND	ug / L	1	1		03/30/01
X01108	XG.2001.371-2	78-93-3	2-Butanone (MEK)	ND	ug / L	1	5		03/30/01
X01108	XG.2001.371-2	110-75-8	2-Chloroethylvinylether	ND	ug / L	1	5		03/30/01
X01108	XG.2001.371-2	591-78-6	2-Hexanone (MBK)	ND	ug / L	1	5		03/30/01
X01108	XG.2001.371-2	108-10-1	4-Methyl-2-pentanone (MIBK)	ND	ug / L	1	5		03/30/01
X01108	XG.2001.371-2	67-64-1	Acetone	ND	ug / L	1	10		03/30/01
X01108	XG.2001.371-2	107-02-8	Acrolein	ND	ug / L	1	20		03/30/01
X01108	XG.2001.371-2	107-13-1	Acrylonitrile	ND	ug / L	1	20		03/30/01
X01108	XG.2001.371-2	71-43-2	Benzene	ND	ug / L	1	1		03/30/01
X01108	XG.2001.371-2	75-27-4	Bromodichloromethane	ND	ug / L	1	1		03/30/01
X01108	XG.2001.371-2	75-25-2	Bromoform	ND	ug / L	1	1		03/30/01
X01108	XG.2001.371-2	74-83-9	Bromomethane	ND	ug / L	1	5		03/30/01
X01108	XG.2001.371-2	75-15-0	Carbon disulfide	ND	ug / L	1	5		03/30/01
X01108	XG.2001.371-2	56-23-5	Carbon tetrachloride	ND	ug / L	1	1		03/30/01
X01108	XG.2001.371-2	108-90-7	Chlorobenzene	ND	ug / L	1	1		03/30
X01108	XG.2001.371-2	124-48-1	Chlorodibromomethane	ND	ug / L	1	1		03/30
X01108	XG.2001.371-2	75-00-3	Chloroethane	ND	ug / L	1	5		03/30/01
X01108	XG.2001.371-2	67-66-3	Chloroform	ND	ug / L	1	1		03/30/01
X01108	XG.2001.371-2	74-87-3	Chloromethane	ND	ug / L	1	5		03/30/01
X01108	XG.2001.371-2	156-59-2	cis-1,2 dichloroethene	ND	ug / L	1	1		03/30/01
X01108	XG.2001.371-2	10061-01-5	cis-1,3 dichloropropene	ND	ug / L	1	1		03/30/01
X01108	XG.2001.371-2	74-95-3	Dibromomethane	ND	ug / L	1	1		03/30/01
X01108	XG.2001.371-2	97-63-2	Ethyl methacrylate	ND	ug / L	1	5		03/30/01
X01108	XG.2001.371-2	100-41-4	Ethylbenzene	ND	ug / L	1	1		03/30/01
X01108	XG.2001.371-2		Freon 113	ND	ug / L	1	5		03/30/01
X01108	XG.2001.371-2	75-71-8	Freon 12	ND	ug / L	1	10		03/30/01
X01108	XG.2001.371-2	74-88-4	Iodomethane	ND	ug / L	1	5		03/30/01
X01108	XG.2001.371-2	1634-04-4	Methyl t-butyl ether (MTBE)	ND	ug / L	1	1		03/30/01
X01108	XG.2001.371-2	75-09-2	Methylene chloride	ND	ug / L	1	10		03/30/01
X01108	XG.2001.371-2	91-20-3	Naphthalene	ND	ug / L	1	5		03/30/01
X01108	XG.2001.371-2	95-47-6	o-Xylene	ND	ug / L	1	1		03/30/01
X01108	XG.2001.371-2	108-38-3/106-42	p/m Xylenes	ND	ug / L	1	2		03/30/01
X01108	XG.2001.371-2	100-42-5	Styrene	ND	ug / L	1	1		03/30/01
X01108	XG.2001.371-2	156-60-5	t-1,2 Dichloroethene	ND	ug / L	1	1		03/30/01
X01108	XG.2001.371-2	10061-02-6	t-1,3 Dichloropropene	ND	ug / L	1	1		03/30/01
X01108	XG.2001.371-2	127-18-4	Tetrachloroethene	ND	ug / L	1	1		03/30/01
X01108	XG.2001.371-2	108-88-3	Toluene	1.3	ug / L	1	1		03/30/01
X01108	XG.2001.371-2	79-01-6	Trichloroethene	ND	ug / L	1	1		03/30/01
X01108	XG.2001.371-2	75-69-4	Trichlorofluoromethane	ND	ug / L	1	5		03/30/01
X01108	XG.2001.371-2	108-05-4	Vinyl acetate	ND	ug / L	1	5		03/30

Certificate of Analysis

Client: **CH2MHILL**

Project: **0103365** **160660.02.FF.SA**

X01108	XG.2001.371-2	75-01-4	Vinyl chloride	ND	ug / L	1	5	03/30/01
0103365-05D		**SW846 3510B/8270B SVOCs by GC/MS**						
X0199	XG.2001.374-2	120-82-1	1,2,4-Trichlorobenzene	ND	ug / L	1	1	03/30/01
X0199	XG.2001.374-2	95-50-1	1,2-Dichlorobenzene	ND	ug / L	1	1	03/30/01
X0199	XG.2001.374-2	541-73-1	1,3-Dichlorobenzene	ND	ug / L	1	1	03/30/01
X0199	XG.2001.374-2	106-46-7	1,4-Dichlorobenzene	ND	ug / L	1	1	03/30/01
X0199	XG.2001.374-2	90-12-0	1-Methylnaphthalene	ND	ug / L	1	1	03/30/01
X0199	XG.2001.374-2	58-90-2	2,3,4,6-Tetrachlorophenol	ND	ug / L	1	5	03/30/01
X0199	XG.2001.374-2	95-95-4	2,4,5-Trichlorophenol	ND	ug / L	1	5	03/30/01
X0199	XG.2001.374-2	88-06-2	2,4,6-Trichlorophenol	ND	ug / L	1	5	03/30/01
X0199	XG.2001.374-2	120-83-2	2,4-Dichlorophenol	ND	ug / L	1	5	03/30/01
X0199	XG.2001.374-2	105-67-9	2,4-Dimethylphenol	ND	ug / L	1	1	03/30/01
X0199	XG.2001.374-2	51-28-5	2,4-Dinitrophenol	ND	ug / L	1	10	03/30/01
X0199	XG.2001.374-2	121-14-2	2,4-Dinitrotoluene	ND	ug / L	1	5	03/30/01
X0199	XG.2001.374-2	606-20-2	2,6-Dinitrotoluene	ND	ug / L	1	5	03/30/01
X0199	XG.2001.374-2	91-58-7	2-Chloronaphthalene	ND	ug / L	1	1	03/30/01
X0199	XG.2001.374-2	95-57-8	2-Chlorophenol	ND	ug / L	1	1	03/30/01
X0199	XG.2001.374-2	91-57-6	2-Methylnaphthalene	ND	ug / L	1	1	03/30/01
X0199	XG.2001.374-2	95-48-7	2-Methylphenol	ND	ug / L	1	1	03/30/01
X0199	XG.2001.374-2	88-74-4	2-Nitroaniline	ND	ug / L	1	5	03/30/01
X0199	XG.2001.374-2	88-75-5	2-Nitrophenol	ND	ug / L	1	5	03/30/01
	XG.2001.374-2		3+4 Methylphenol	ND	ug / L	1	1	03/30/01
X0199	XG.2001.374-2	91-94-1	3,3-Dichlorobenzidine	ND	ug / L	1	10	03/30/01
X0199	XG.2001.374-2	99-09-2	3-Nitroaniline	ND	ug / L	1	5	03/30/01
X0199	XG.2001.374-2	534-52-1	4,6-Dinitro-2-methylphenol	ND	ug / L	1	10	03/30/01
X0199	XG.2001.374-2	101-55-3	4-Bromophenyl-phenylether	ND	ug / L	1	1	03/30/01
X0199	XG.2001.374-2	59-50-7	4-Chloro-3-methylphenol	ND	ug / L	1	5	03/30/01
X0199	XG.2001.374-2	106-47-8	4-Chloroaniline	ND	ug / L	1	5	03/30/01
X0199	XG.2001.374-2	7005-72-3	4-Chlorophenyl-phenylether	ND	ug / L	1	1	03/30/01
X0199	XG.2001.374-2	100-01-6	4-Nitroaniline	ND	ug / L	1	5	03/30/01
X0199	XG.2001.374-2	100-02-7	4-Nitrophenol	ND	ug / L	1	10	03/30/01
X0199	XG.2001.374-2	83-32-9	Acenaphthene	ND	ug / L	1	1	03/30/01
X0199	XG.2001.374-2	208-96-8	Acenaphthylene	ND	ug / L	1	1	03/30/01
X0199	XG.2001.374-2	62-53-3	Aniline	ND	ug / L	1	10	03/30/01
X0199	XG.2001.374-2	120-12-7	Anthracene	ND	ug / L	1	1	03/30/01
X0199	XG.2001.374-2		Azobenzene&1,2-Diphenylhydrazine	ND	ug / L	1	1	03/30/01
X0199	XG.2001.374-2	56-55-3	Benzo (a) anthracene	ND	ug / L	1	1	03/30/01
X0199	XG.2001.374-2	50-32-8	Benzo(a)pyrene	ND	ug / L	1	1	03/30/01
X0199	XG.2001.374-2		Benzo(b & k)fluoranthene	ND	ug / L	1	1	03/30/01
X0199	XG.2001.374-2	191-24-2	Benzo(g,h,i)perylene	ND	ug / L	1	1	03/30/01
X0199	XG.2001.374-2	64-85-0	Benzoic acid	ND	ug / L	1	25	03/30/01
X0199	XG.2001.374-2	100-51-6	Benzyl alcohol	ND	ug / L	1	5	03/30/01
X0199	XG.2001.374-2	111-44-4	bis (2-Chloroethyl) ether	ND	ug / L	1	1	03/30/01
X0199	XG.2001.374-2	111-91-1	bis(2-Chloroethoxy)methane	ND	ug / L	1	1	03/30/01
X0199	XG.2001.374-2	108-60-1	bis(2-Chloroisopropyl)ether	ND	ug / L	1	1	03/30/01
X0199	XG.2001.374-2	117-81-7	bis(2-Ethylhexyl)phthalate	ND	ug / L	1	5	03/30/01
	XG.2001.374-2	85-68-7	Butylbenzylphthalate	ND	ug / L	1	1	03/30/01

Certificate of Analysis

Client: **CH2MHILL**

Project: **0103365** **160660.02.FF.SA**

X0199	XG.2001.374-2	218-01-9	Chrysene	ND	ug / L	1	1		03/30/C 1
X0199	XG.2001.374-2	84-74-2	di-n-Butylphthalate	ND	ug / L	1	1		03/30/C 1
X0199	XG.2001.374-2	117-84-0	di-n-Octylpthalate	ND	ug / L	1	1		03/30/C 1
X0199	XG.2001.374-2	53-70-3	Dibenz(a,h)anthracene	ND	ug / L	1	1		03/30/C 1
X0199	XG.2001.374-2	132-64-9	Dibenzofuran	ND	ug / L	1	1		03/30/C 1
X0199	XG.2001.374-2	84-66-2	Diethylphthalate	ND	ug / L	1	1		03/30/C 1
X0199	XG.2001.374-2	131-11-3	Dimethylphthalate	ND	ug / L	1	1		03/30/C 1
X0199	XG.2001.374-2	206-44-0	Fluoranthene	ND	ug / L	1	1		03/30/C 1
X0199	XG.2001.374-2	86737	Fluorene	ND	ug / L	1	1		03/30/C 1
X0199	XG.2001.374-2	118-74-1	Hexachlorobenzene	ND	ug / L	1	10		03/30/C 1
X0199	XG.2001.374-2	87-68-3	Hexachlorobutadiene	ND	ug / L	1	10		03/30/C 1
X0199	XG.2001.374-2	77-47-4	Hexachlorocyclopentadiene	ND	ug / L	1	10		03/30/C 1
X0199	XG.2001.374-2	67-72-1	Hexachloroethane	ND	ug / L	1	5		03/30/C 1
X0199	XG.2001.374-2	193-39-5	Indeno(1,2,3-cd)pyrene	ND	ug / L	1	1		03/30/C 1
X0199	XG.2001.374-2	78-59-1	Isophorone	ND	ug / L	1	1		03/30/C 1
X0199	XG.2001.374-2	621-64-7	n-Nitroso-di-n-propylamine	ND	ug / L	1	1		03/30/C 1
X0199	XG.2001.374-2	62-75-9	n-Nitroso-dimethyl-amine	ND	ug / L	1	10		03/30/C 1
X0199	XG.2001.374-2	86-30-6	n-Nitrosodiphenylamine	ND	ug / L	1	1		03/30/C 1
X0199	XG.2001.374-2	91-20-3	Naphthalene	ND	ug / L	1	1		03/30/C 1
X0199	XG.2001.374-2	98-95-3	Nitrobenzene	ND	ug / L	1	1		03/30/C 1
X0199	XG.2001.374-2	87-86-5	Pentachlorophenol	ND	ug / L	1	10		03/30/C 1
X0199	XG.2001.374-2	85-01-8	Phenanthrene	ND	ug / L	1	1		03/30/C 1
X0199	XG.2001.374-2	108-95-2	Phenol	ND	ug / L	1	10		03/30/
X0199	XG.2001.374-2	129-00-0	Pyrene	ND	ug / L	1	1		03/30/
X0199	XG.2001.374-2	110-86-1	Pyridine	ND	ug / L	1	10		03/30/C 1

Client Sample ID ***TRIP BLANK*** Sample Matrix ***H2O*** Sample Collected ***03/2[illegible]/01 10:30:00***

QC Group	Run Sequence	CAS #	Analyte	Result	Units	Dilution Factor	Detection Limit	Code	Run Date
0103365-06A		**SW846 8260A Purgeable VOCs by GC/MS**							
X01108	XG.2001.371-3	75-34-3	1,1 Dichloroethane	ND	ug / L	1	1		03/30/C 1
X01108	XG.2001.371-3	75-34-3	1,1 Dichloroethene	ND	ug / L	1	1		03/30/C 1
X01108	XG.2001.371-3	71-55-6	1,1,1 Trichloroethane	ND	ug / L	1	1		03/30/C 1
X01108	XG.2001.371-3	630-20-6	1,1,1,2 Tetrachloroethane	ND	ug / L	1	1		03/30/C 1
X01108	XG.2001.371-3	79-00-5	1,1,2 Trichloroethane	ND	ug / L	1	1		03/30/C 1
X01108	XG.2001.371-3	79-34-5	1,1,2,2 Tetrachloroethane	ND	ug / L	1	1		03/30/C 1
X01108	XG.2001.371-3	106-93-4	1,2 Dibromoethane (EDB)	ND	ug / L	1	1		03/30/C 1
X01108	XG.2001.371-3	95-50-1	1,2 Dichlorobenzene	ND	ug / L	1	1		03/30/C 1
X01108	XG.2001.371-3	107-06-2	1,2 Dichloroethane	ND	ug / L	1	1		03/30/C 1
X01108	XG.2001.371-3	78-87-5	1,2 Dichloropropane	ND	ug / L	1	1		03/30/C 1
X01108	XG.2001.371-3	96-18-4	1,2,3 Trichloropropane	ND	ug / L	1	1		03/30/C 1
X01108	XG.2001.371-3	95-63-6	1,2,4-Trimethylbenzene	ND	ug / L	1	1		03/30/C 1
X01108	XG.2001.371-3	541-73-1	1,3 Dichlorobenzene	ND	ug / L	1	1		03/30/C 1
X01108	XG.2001.371-3	108-67-8	1,3,5-Trimethylbenzene	ND	ug / L	1	1		03/30/C 1
X01108	XG.2001.371-3	764-41-0	1,4 Dichloro-2-butene	ND	ug / L	1	10		03/30/
X01108	XG.2001.371-3	106-46-7	1,4 Dichlorobenzene	ND	ug / L	1	1		03/30

Certificate of Analysis

Client: **CH2MHILL**

Project: **0103365** **160660.02.FF.SA**

X01108	XG.2001.371-3	78-93-3	2-Butanone (MEK)	ND	ug / L	1	5		03/30/01
X01108	XG.2001.371-3	110-75-8	2-Chloroethylvinylether	ND	ug / L	1	5		03/30/01
X01108	XG.2001.371-3	591 78-6	2-Hexanone (MBK)	ND	ug / L	1	5		03/30/01
X01108	XG.2001.371-3	108-10-1	4-Methyl-2-pentanone (MIBK)	ND	ug / L	1	5		03/30/01
X01108	XG.2001.371-3	67-64-1	Acetone	ND	ug / L	1	10		03/30/01
X01108	XG.2001.371-3	107-02-8	Acrolein	ND	ug / L	1	20		03/30/01
X01108	XG.2001.371-3	107-13-1	Acrylonitrile	ND	ug / L	1	20		03/30/01
X01108	XG.2001.371-3	71-43-2	Benzene	ND	ug / L	1	1		03/30/01
X01108	XG.2001.371-3	75-27-4	Bromodichloromethane	ND	ug / L	1	1		03/30/01
X01108	XG.2001.371-3	75-25-2	Bromoform	ND	ug / L	1	1		03/30/01
X01108	XG.2001.371-3	74-83-9	Bromomethane	ND	ug / L	1	5		03/30/01
X01108	XG.2001.371-3	75-15-0	Carbon disulfide	ND	ug / L	1	5		03/30/01
X01108	XG.2001.371-3	56-23-5	Carbon tetrachloride	ND	ug / L	1	1		03/30/01
X01108	XG.2001.371-3	108-90-7	Chlorobenzene	ND	ug / L	1	1		03/30/01
X01108	XG.2001.371-3	124-48-1	Chlorodibromomethane	ND	ug / L	1	1		03/30/01
X01108	XG.2001.371-3	75-00-3	Chloroethane	ND	ug / L	1	5		03/30/01
X01108	XG.2001.371-3	67-66-3	Chloroform	ND	ug / L	1	1		03/30/01
X01108	XG.2001.371-3	74-87-3	Chloromethane	ND	ug / L	1	5		03/30/01
X01108	XG.2001.371-3	156-59-2	cis-1,2 dichloroethene	ND	ug / L	1	1		03/30/01
X01108	XG.2001.371-3	10061-01-5	cis-1,3 dichloropropene	ND	ug / L	1	1		03/30/01
X01108	XG.2001.371-3	74-95-3	Dibromomethane	ND	ug / L	1	1		03/30/01
X01108	XG.2001.371-3	97-63-2	Ethyl methacrylate	ND	ug / L	1	5		03/30/01
[illegible]3	XG.2001.371-3	100-41-4	Ethylbenzene	ND	ug / L	1	1		03/30/01
X01108	XG.2001.371-3		Freon 113	ND	ug / L	1	5		03/30/01
X01108	XG.2001.371-3	75-71-8	Freon 12	ND	ug / L	1	10		03/30/01
X01108	XG.2001.371-3	74-88-4	Iodomethane	ND	ug / L	1	5		03/30/01
X01108	XG.2001.371-3	1634-04-4	Methyl t-butyl ether (MTBE)	ND	ug / L	1	1		03/30/01
X01108	XG.2001.371-3	75-09-2	Methylene chloride	ND	ug / L	1	10		03/30/01
X01108	XG.2001.371-3	91-20-3	Naphthalene	ND	ug / L	1	5		03/30/01
X01108	XG.2001.371-3	95-47-6	o-Xylene	ND	ug / L	1	1		03/30/01
X01108	XG.2001.371-3	108-38-3/106-42	p/m Xylenes	ND	ug / L	1	2		03/30/01
X01108	XG.2001.371-3	100-42-5	Styrene	ND	ug / L	1	1		03/30/01
X01108	XG.2001.371-3	156-60-5	t-1,2 Dichloroethene	ND	ug / L	1	1		03/30/01
X01108	XG.2001.371-3	10061-02-6	t-1,3 Dichloropropene	ND	ug / L	1	1		03/30/01
X01108	XG.2001.371-3	127-18-4	Tetrachloroethene	ND	ug / L	1	1		03/30/01
X01108	XG.2001.371-3	108-88-3	Toluene	ND	ug / L	1	1		03/30/01
X01108	XG.2001.371-3	79-01-6	Trichloroethene	ND	ug / L	1	1		03/30/01
X01108	XG.2001.371-3	75-69-4	Trichlorofluoromethane	ND	ug / L	1	5		03/30/01
X01108	XG.2001.371-3	108-05-4	Vinyl acetate	ND	ug / L	1	5		03/30/01
X01108	XG.2001.371-3	75-01-4	Vinyl chloride	ND	ug / L	1	5		03/30/01

**** Sample specific Detection Limit is determined by multiplying the sample Dilution Factor by the listed Reporting Detection Limit. ****

**** ND = Not detected: less than the sample specific Detection Limit. Results relate only to the items tested. ****

Assaigai Analytical Laboratories, Inc.

Quality Control Summary

Client: **CH2MHILL**

Project: **0103365** **160660.02.FF.SA**

Explanation of codes

D *Not applicable due to sample dilut*

L *Not applicable due to MDL proxim*

QC Type **LCS: Lab Control Spike** QC Matrix **SOLID**

QC Group	Run Sequence	CAS #	Analyte	Result	Units	Dilution Factor	Detection Limit	Code	Run Date
X01105-007		**SW846 8260A Purgeable VOCs by GC/MS**							
X01105	XG.2001.376-7	75-34-3	1,1 Dichloroethene	113	% Recovery	1	NA		03/29/(1
X01105	XG.2001.376-7	106-46-7	1,4 Dichlorobenzene	104	% Recovery	1	NA		03/29/(1
X01105	XG.2001.376-7	71-43-2	Benzene	111	% Recovery	1	NA		03/29/(1
X01105	XG.2001.376-7	108-90-7	Chlorobenzene	108	% Recovery	1	NA		03/29/(1
X01105	XG.2001.376-7	108-88-3	Toluene	116	% Recovery	1	NA		03/29/(1
X01105	XG.2001.376-7	79-01-6	Trichloroethene	108	% Recovery	1	NA		03/29/(1
X0194-002		**SW846 5030A/8015A GRO by GC/FID**							
X0194	XG.2001.325-2		Gasoline Range Organics	110	% Recovery	1	NA		03/16/(1
X0198-002		**SW846 ME/8015A Diesel Range Organics by GC/FID**							
X0198	XG.2001.334-2		Diesel Range Organics	88	% Recovery	1	NA		03/20/(1

QC Type **LCSD: Lab Control Spike Duplicate Accuracy** QC Matrix **SOLID**

QC Group	Run Sequence	CAS #	Analyte	Result	Units	Dilution Factor	Detection Limit	Code	Run Date
X01105-008		**SW846 8260A Purgeable VOCs by GC/MS**							
X01105	XG.2001.376-8	75-34-3	1,1 Dichloroethene	112	% Recovery	1	NA		03/29/(1
X01105	XG.2001.376-8	106-46-7	1,4 Dichlorobenzene	106	% Recovery	1	NA		03/29/(1
X01105	XG.2001.376-8	71-43-2	Benzene	112	% Recovery	1	NA		03/29/(1
X01105	XG.2001.376-8	108-90-7	Chlorobenzene	106	% Recovery	1	NA		03/29/(1
X01105	XG.2001.376-8	108-88-3	Toluene	112	% Recovery	1	NA		03/29/(1
X01105	XG.2001.376-8	79-01-6	Trichloroethene	107	% Recovery	1	NA		03/29/(1
X0194-003		**SW846 5030A/8015A GRO by GC/FID**							
X0194	XG.2001.325-3		Gasoline Range Organics	110	% Recovery	1	NA		03/16/(1
X0198-003		**SW846 ME/8015A Diesel Range Organics by GC/FID**							
X0198	XG.2001.334-3		Diesel Range Organics	94	% Recovery	1	NA		03/20/(1

QC Type **LCSD: Lab Control Spike Duplicate Precision** QC Matrix **SOLID**

QC Group	Run Sequence	CAS #	Analyte	Result	Units	Dilution Factor	Detection Limit	Code	Run Date
X01105-008		**SW846 8260A Purgeable VOCs by GC/MS**							
X01105	XG.2001.376-8	75-34-3	1,1 Dichloroethene	< 1	RPD	1	NA		03/29/(1
X01105	XG.2001.376-8	106-46-7	1,4 Dichlorobenzene	2	RPD	1	NA		03/29/(1
X01105	XG.2001.376-8	71-43-2	Benzene	1	RPD	1	NA		03/29/(1
X01105	XG.2001.376-8	108-90-7	Chlorobenzene	1	RPD	1	NA		03/29/(1
X01105	XG.2001.376-8	108-88-3	Toluene	3	RPD	1	NA		03/29/
X01105	XG.2001.376-8	79-01-6	Trichloroethene	< 1	RPD	1	NA		03/2

Quality Control Summary

Explanation of codes

D	*Not applicable due to sample dilution*
L	*Not applicable due to MDL proximity*

Client: **CH2MHILL**

Project: **0103365** **160660.02.FF.SA**

X0194-003		**SW846 5030A/8015A GRO by GC/FID**							
X0194	XG.2001.325-3	Gasoline Range Organics	< 1	RPD	1	NA		03/16/01
X0198-003		**SW846 ME/8015A Diesel Range Organics by GC/FID**						
X0198	XG.2001.334-3	Diesel Range Organics	6	RPD	1	NA		03/20/01

QC Type **MB: Method Blank** QC Matrix **SOLID**

QC Group	Run Sequence	CAS #	Analyte	Result	Units	Dilution Factor	Detection Limit	Code	Run Date
X01105-001		**SW846 8260A Purgeable VOCs by GC/MS**							
X01105	XG.2001.376-1	75-34-3	1,1 Dichloroethane	ND	mg / Kg	1	0.005		03/28/01
X01105	XG.2001.376-1	75-34-3	1,1 Dichloroethene	ND	mg / Kg	1	0.005		03/28/01
X01105	XG.2001.376-1	71-55-6	1,1,1 Trichloroethane	ND	mg / Kg	1	0.005		03/28/01
X01105	XG.2001.376-1	630-20-6	1,1,1,2 Tetrachloroethane	ND	mg / Kg	1	0.005		03/28/01
X01105	XG.2001.376-1	79-00-5	1,1,2 Trichloroethane	ND	mg / Kg	1	0.005		03/28/01
X01105	XG.2001.376-1	79-34-5	1,1,2,2 Tetrachloroethane	ND	mg / Kg	1	0.005		03/28/01
X01105	XG.2001.376-1	106-93-4	1,2 Dibromoethane (EDB)	ND	mg / Kg	1	0.005		03/28/01
X01105	XG.2001.376-1	95-50-1	1,2 Dichlorobenzene	ND	mg / Kg	1	0.005		03/28/01
X01105	XG.2001.376-1	107-06-2	1,2 Dichloroethane	ND	mg / Kg	1	0.005		03/28/01
X01105	XG.2001.376-1	78-87-5	1,2 Dichloropropane	ND	mg / Kg	1	0.005		03/28/01
[illegible]5	XG.2001.376-1	96-18-4	1,2,3 Trichloropropane	ND	mg / Kg	1	0.005		03/28/01
[illegible]5	XG.2001.376-1	95-63-6	1,2,4-Trimethylbenzene	ND	mg / Kg	1	0.005		03/28/01
X01105	XG.2001.376-1	541-73-1	1,3 Dichlorobenzene	ND	mg / Kg	1	0.005		03/28/01
X01105	XG.2001.376-1	108-67-8	1,3,5-Trimethylbenzene	ND	mg / Kg	1	0.005		03/28/01
X01105	XG.2001.376-1	764-41-0	1,4 Dichloro-2-butene	ND	mg / Kg	1	0.05		03/28/01
X01105	XG.2001.376-1	106-46-7	1,4 Dichlorobenzene	ND	mg / Kg	1	0.005		03/28/01
X01105	XG.2001.376-1	78-93-3	2-Butanone (MEK)	ND	mg / Kg	1	0.025		03/28/01
X01105	XG.2001.376-1	110-75-8	2-Chloroethylvinylether	ND	mg / Kg	1	0.025		03/28/01
X01105	XG.2001.376-1	591-78-6	2-Hexanone (MBK)	ND	mg / Kg	1	0.025		03/28/01
X01105	XG.2001.376-1	108-10-1	4-Methyl-2-pentanone (MIBK)	ND	mg / Kg	1	0.025		03/28/01
X01105	XG.2001.376-1	67-64-1	Acetone	ND	mg / Kg	1	0.05		03/28/01
X01105	XG.2001.376-1	107-02-8	Acrolein	ND	mg / Kg	1	0.1		03/28/01
X01105	XG.2001.376-1	107-13-1	Acrylonitrile	ND	mg / Kg	1	0.1		03/28/01
X01105	XG.2001.376-1	71-43-2	Benzene	ND	mg / Kg	1	0.005		03/28/01
X01105	XG.2001.376-1	75-27-4	Bromodichloromethane	ND	mg / Kg	1	0.005		03/28/01
X01105	XG.2001.376-1	75-25-2	Bromoform	ND	mg / Kg	1	0.005		03/28/01
X01105	XG.2001.376-1	74-83-9	Bromomethane	ND	mg / Kg	1	0.025		03/28/01
X01105	XG.2001.376-1	75-15-0	Carbon disulfide	ND	mg / Kg	1	0.025		03/28/01
X01105	XG.2001.376-1	56-23-5	Carbon tetrachloride	ND	mg / Kg	1	0.005		03/28/01
X01105	XG.2001.376-1	108-90-7	Chlorobenzene	ND	mg / Kg	1	0.005		03/28/01
X01105	XG.2001.376-1	124-48-1	Chlorodibromomethane	ND	mg / Kg	1	0.005		03/28/01
X01105	XG.2001.376-1	75-00-3	Chloroethane	ND	mg / Kg	1	0.025		03/28/01
X01105	XG.2001.376-1	67-66-3	Chloroform	ND	mg / Kg	1	0.005		03/28/01
X01105	XG.2001.376-1	74-87-3	Chloromethane	ND	mg / Kg	1	0.025		03/28/01
X01105	XG.2001.376-1	156-59-2	cis-1,2 dichloroethene	ND	mg / Kg	1	0.005		03/28/01
X01105	XG.2001.376-1	10061-01-5	cis-1,3 dichloropropene	ND	mg / Kg	1	0.005		03/28/01
[illegible]5	XG.2001.376-1	74-95-3	Dibromomethane	ND	mg / Kg	1	0.005		03/28/01
[illegible]05	XG.2001.376-1	97-63-2	Ethyl methacrylate	ND	mg / Kg	1	0.025		03/28/01

Quality Control Summary

Client: **CH2MHILL**

Project: **0103365** **160660.02.FF.SA**

Explanation of codes

D *Not applicable due to sample dilutic*

L *Not applicable due to MDL proximi*

X01105	XG.2001.376-1	100-41-4	Ethylbenzene	ND	mg / Kg	1	0.005	03/28/01
X01105	XG.2001.376-1		Freon 113	ND	mg / Kg	1	0.025	03/28/01
X01105	XG.2001.376-1	75-71-8	Freon 12	ND	mg / Kg	1	0.05	03/28/01
X01105	XG.2001.376-1	74-88-4	Iodomethane	ND	mg / Kg	1	0.025	03/28/01
X01105	XG.2001.376-1	1634-04-4	Methyl t-butyl ether (MTBE)	ND	mg / Kg	1	0.005	03/28/01
X01105	XG.2001.376-1	75-09-2	Methylene chloride	ND	mg / Kg	1	0.05	03/28/01
X01105	XG.2001.376-1	91-20-3	Naphthalene	ND	mg / Kg	1	0.025	03/28/01
X01105	XG.2001.376-1	95-47-6	o-Xylene	ND	mg / Kg	1	0.005	03/28/01
X01105	XG.2001.376-1	108-38-3/106-42	p/m Xylenes	ND	mg / Kg	1	0.01	03/28/01
X01105	XG.2001.376-1	100-42-5	Styrene	ND	mg / Kg	1	0.005	03/28/01
X01105	XG.2001.376-1	156-60-5	t-1,2 Dichloroethene	ND	mg / Kg	1	0.005	03/28/01
X01105	XG.2001.376-1	10061-02-6	t-1,3 Dichloropropene	ND	mg / Kg	1	0.005	03/28/01
X01105	XG.2001.376-1	127-18-4	Tetrachloroethene	ND	mg / Kg	1	0.005	03/28/01
X01105	XG.2001.376-1	108-88-3	Toluene	ND	mg / Kg	1	0.005	03/28/01
X01105	XG.2001.376-1	79-01-6	Trichloroethene	ND	mg / Kg	1	0.005	03/28/01
X01105	XG.2001.376-1	75-69-4	Trichlorofluoromethane	ND	mg / Kg	1	0.025	03/28/01
X01105	XG.2001.376-1	108-05-4	Vinyl acetate	ND	mg / Kg	1	0.025	03/28/01
X01105	XG.2001.376-1	75-01-4	Vinyl chloride	ND	mg / Kg	1	0.025	03/28/01
X01105-009		**SW846 8260A Purgeable VOCs by GC/MS**						
X01105	XG.2001.376-9	75-34-3	1,1 Dichloroethane	ND	mg / Kg	1	0.005	03/29/01
X01105	XG.2001.376-9	75-34-3	1,1 Dichloroethene	ND	mg / Kg	1	0.005	03/29/01
X01105	XG.2001.376-9	71-55-6	1,1,1 Trichloroethane	ND	mg / Kg	1	0.005	03/29/01
X01105	XG.2001.376-9	630-20-6	1,1,1,2 Tetrachloroethane	ND	mg / Kg	1	0.005	03/29/0
X01105	XG.2001.376-9	79-00-5	1,1,2 Trichloroethane	ND	mg / Kg	1	0.005	03/29/
X01105	XG.2001.376-9	79-34-5	1,1,2,2 Tetrachloroethane	ND	mg / Kg	1	0.005	03/29/01
X01105	XG.2001.376-9	106-93-4	1,2 Dibromoethane (EDB)	ND	mg / Kg	1	0.005	03/29/01
X01105	XG.2001.376-9	95-50-1	1,2 Dichlorobenzene	ND	mg / Kg	1	0.005	03/29/01
X01105	XG.2001.376-9	107-06-2	1,2 Dichloroethane	ND	mg / Kg	1	0.005	03/29/01
X01105	XG.2001.376-9	78-87-5	1,2 Dichloropropane	ND	mg / Kg	1	0.005	03/29/01
X01105	XG.2001.376-9	96-18-4	1,2,3 Trichloropropane	ND	mg / Kg	1	0.005	03/29/01
X01105	XG.2001.376-9	95-63-6	1,2,4-Trimethylbenzene	ND	mg / Kg	1	0.005	03/29/01
X01105	XG.2001.376-9	541-73-1	1,3 Dichlorobenzene	ND	mg / Kg	1	0.005	03/29/01
X01105	XG.2001.376-9	108-67-8	1,3,5-Trimethylbenzene	ND	mg / Kg	1	0.005	03/29/01
X01105	XG.2001.376-9	764-41-0	1,4 Dichloro-2-butene	ND	mg / Kg	1	0.05	03/29/01
X01105	XG.2001.376-9	106-46-7	1,4 Dichlorobenzene	ND	mg / Kg	1	0.005	03/29/01
X01105	XG.2001.376-9	78-93-3	2-Butanone (MEK)	ND	mg / Kg	1	0.025	03/29/01
X01105	XG.2001.376-9	110-75-8	2-Chloroethylvinylether	ND	mg / Kg	1	0.025	03/29/01
X01105	XG.2001.376-9	591-78-6	2-Hexanone (MBK)	ND	mg / Kg	1	0.025	03/29/01
X01105	XG.2001.376-9	108-10-1	4-Methyl-2-pentanone (MIBK)	ND	mg / Kg	1	0.025	03/29/01
X01105	XG.2001.376-9	67-64-1	Acetone	ND	mg / Kg	1	0.05	03/29/01
X01105	XG.2001.376-9	107-02-8	Acrolein	ND	mg / Kg	1	0.1	03/29/01
X01105	XG.2001.376-9	107-13-1	Acrylonitrile	ND	mg / Kg	1	0.1	03/29/01
X01105	XG.2001.376-9	71-43-2	Benzene	ND	mg / Kg	1	0.005	03/29/01
X01105	XG.2001.376-9	75-27-4	Bromodichloromethane	ND	mg / Kg	1	0.005	03/29/01
X01105	XG.2001.376-9	75-25-2	Bromoform	ND	mg / Kg	1	0.005	03/29/01
X01105	XG.2001.376-9	74-83-9	Bromomethane	ND	mg / Kg	1	0.025	03/29/01
X01105	XG.2001.376-9	75-15-0	Carbon disulfide	ND	mg / Kg	1	0.025	03/29/01
X01105	XG.2001.376-9	56-23-5	Carbon tetrachloride	ND	mg / Kg	1	0.005	03/29/01
X01105	XG.2001.376-9	108-90-7	Chlorobenzene	ND	mg / Kg	1	0.005	03/29/

Quality Control Summary

Explanation of codes

D *Not applicable due to sample dilution*
L *Not applicable due to MDL proximity*

Client: CH2MHILL
Project: 0103365 160660.02.FF.SA

X01105	XG.2001.376-9	124-48-1	Chlorodibromomethane	ND	mg / Kg	1	0.005	03/29/01
X01105	XG.2001.376-9	75-00-3	Chloroethane	ND	mg / Kg	1	0.025	03/29/01
X01105	XG.2001.376-9	67-66-3	Chloroform	ND	mg / Kg	1	0.005	03/29/01
X01105	XG.2001.376-9	74-87-3	Chloromethane	ND	mg / Kg	1	0.025	03/29/01
X01105	XG.2001.376-9	156-59-2	cis-1,2 dichloroethene	ND	mg / Kg	1	0.005	03/29/01
X01105	XG.2001.376-9	10061-01-5	cis-1,3 dichloropropene	ND	mg / Kg	1	0.005	03/29/01
X01105	XG.2001.376-9	74-95-3	Dibromomethane	ND	mg / Kg	1	0.005	03/29/01
X01105	XG.2001.376-9	97-63-2	Ethyl methacrylate	ND	mg / Kg	1	0.025	03/29/01
X01105	XG.2001.376-9	100-41-4	Ethylbenzene	ND	mg / Kg	1	0.005	03/29/01
X01105	XG.2001.376-9		Freon 113	ND	mg / Kg	1	0.025	03/29/01
X01105	XG.2001.376-9	75-71-8	Freon 12	ND	mg / Kg	1	0.05	03/29/01
X01105	XG.2001.376-9	74-88-4	Iodomethane	ND	mg / Kg	1	0.025	03/29/01
X01105	XG.2001.376-9	1634-04-4	Methyl t-butyl ether (MTBE)	ND	mg / Kg	1	0.005	03/29/01
X01105	XG.2001.376-9	75-09-2	Methylene chloride	ND	mg / Kg	1	0.05	03/29/01
X01105	XG.2001.376-9	91-20-3	Naphthalene	ND	mg / Kg	1	0.025	03/29/01
X01105	XG.2001.376-9	95-47-6	o-Xylene	ND	mg / Kg	1	0.005	03/29/01
X01105	XG.2001.376-9	108-38-3/106-42	p/m Xylenes	ND	mg / Kg	1	0.01	03/29/01
X01105	XG.2001.376-9	100-42-5	Styrene	ND	mg / Kg	1	0.005	03/29/01
X01105	XG.2001.376-9	156-60-5	t-1,2 Dichloroethene	ND	mg / Kg	1	0.005	03/29/01
X01105	XG.2001.376-9	10061-02-6	t-1,3 Dichloropropene	ND	mg / Kg	1	0.005	03/29/01
X01105	XG.2001.376-9	127-18-4	Tetrachloroethene	ND	mg / Kg	1	0.005	03/29/01
X01105	XG.2001.376-9	108-88-3	Toluene	ND	mg / Kg	1	0.005	03/29/01
[illegible]05	XG.2001.376-9	79-01-6	Trichloroethene	ND	mg / Kg	1	0.005	03/29/01
[illegible]05	XG.2001.376-9	75-69-4	Trichlorofluoromethane	ND	mg / Kg	1	0.025	03/29/01
X01105	XG.2001.376-9	108-05-4	Vinyl acetate	ND	mg / Kg	1	0.025	03/29/01
X01105	XG.2001.376-9	75-01-4	Vinyl chloride	ND	mg / Kg	1	0.025	03/29/01
X01105-018		**SW846 8260A Purgeable VOCs by GC/MS**						
X01105	XG.2001.376-16	75-34-3	1,1 Dichloroethane	ND	mg / Kg	1	0.005	03/30/01
X01105	XG.2001.376-16	75-34-3	1,1 Dichloroethene	ND	mg / Kg	1	0.005	03/30/01
X01105	XG.2001.376-16	71-55-6	1,1,1 Trichloroethane	ND	mg / Kg	1	0.005	03/30/01
X01105	XG.2001.376-16	630-20-6	1,1,1,2 Tetrachloroethane	ND	mg / Kg	1	0.005	03/30/01
X01105	XG.2001.376-16	79-00-5	1,1,2 Trichloroethane	ND	mg / Kg	1	0.005	03/30/01
X01105	XG.2001.376-16	79-34-5	1,1,2,2 Tetrachloroethane	ND	mg / Kg	1	0.005	03/30/01
X01105	XG.2001.376-16	106-93-4	1,2 Dibromoethane (EDB)	ND	mg / Kg	1	0.005	03/30/01
X01105	XG.2001.376-16	95-50-1	1,2 Dichlorobenzene	ND	mg / Kg	1	0.005	03/30/01
X01105	XG.2001.376-16	107-06-2	1,2 Dichloroethane	ND	mg / Kg	1	0.005	03/30/01
X01105	XG.2001.376-16	78-87-5	1,2 Dichloropropane	ND	mg / Kg	1	0.005	03/30/01
X01105	XG.2001.376-16	96-18-4	1,2,3 Trichloropropane	ND	mg / Kg	1	0.005	03/30/01
X01105	XG.2001.376-16	95-63-6	1,2,4-Trimethylbenzene	ND	mg / Kg	1	0.005	03/30/01
X01105	XG.2001.376-16	541-73-1	1,3 Dichlorobenzene	ND	mg / Kg	1	0.005	03/30/01
X01105	XG.2001.376-16	108-67-8	1,3,5-Trimethylbenzene	ND	mg / Kg	1	0.005	03/30/01
X01105	XG.2001.376-16	764-41-0	1,4 Dichloro-2-butene	ND	mg / Kg	1	0.05	03/30/01
X01105	XG.2001.376-16	106-46-7	1,4 Dichlorobenzene	ND	mg / Kg	1	0.005	03/30/01
X01105	XG.2001.376-16	78-93-3	2-Butanone (MEK)	ND	mg / Kg	1	0.025	03/30/01
X01105	XG.2001.376-16	110-75-8	2-Chloroethylvinylether	ND	mg / Kg	1	0.025	03/30/01
X01105	XG.2001.376-16	591-78-6	2-Hexanone (MBK)	ND	mg / Kg	1	0.025	03/30/01
X01105	XG.2001.376-16	108-10-1	4-Methyl-2-pentanone (MIBK)	ND	mg / Kg	1	0.025	03/30/01
[illegible]105	XG.2001.376-16	67-64-1	Acetone	ND	mg / Kg	1	0.05	03/30/01
[illegible]05	XG.2001.376-16	107-02-8	Acrolein	ND	mg / Kg	1	0.1	03/30/01

Quality Control Summary

Client: **CH2MHILL**

Project: **0103365** **160660.02.FF.SA**

Explanation of codes

D *Not applicable due to sample dilutir*

L *Not applicable due to MDL proximi*

X01105	XG.2001.376-16	107-13-1	Acrylonitrile	ND	mg / Kg	1	0.1	03/30/01
X01105	XG.2001.376-16	71-43-2	Benzene	ND	mg / Kg	1	0.005	03/30/01
X01105	XG.2001.376-16	75-27-4	Bromodichloromethane	ND	mg / Kg	1	0.005	03/30/01
X01105	XG.2001.376-16	75-25-2	Bromoform	ND	mg / Kg	1	0.005	03/30/01
X01105	XG.2001.376-16	74-83-9	Bromomethane	ND	mg / Kg	1	0.025	03/30/01
X01105	XG.2001.376-16	75-15-0	Carbon disulfide	ND	mg / Kg	1	0.025	03/30/01
X01105	XG.2001.376-16	56-23-5	Carbon tetrachloride	ND	mg / Kg	1	0.005	03/30/01
X01105	XG.2001.376-16	108-90-7	Chlorobenzene	ND	mg / Kg	1	0.005	03/30/01
X01105	XG.2001.376-16	124-48-1	Chlorodibromomethane	ND	mg / Kg	1	0.005	03/30/01
X01105	XG.2001.376-16	75-00-3	Chloroethane	ND	mg / Kg	1	0.025	03/30/01
X01105	XG.2001.376-16	67-66-3	Chloroform	ND	mg / Kg	1	0.005	03/30/01
X01105	XG.2001.376-16	74-87-3	Chloromethane	ND	mg / Kg	1	0.025	03/30/01
X01105	XG.2001.376-16	156-59-2	cis-1,2 dichloroethene	ND	mg / Kg	1	0.005	03/30/01
X01105	XG.2001.376-16	10061-01-5	cis-1,3 dichloropropene	ND	mg / Kg	1	0.005	03/30/01
X01105	XG.2001.376-16	74-95-3	Dibromomethane	ND	mg / Kg	1	0.005	03/30/01
X01105	XG.2001.376-16	97-63-2	Ethyl methacrylate	ND	mg / Kg	1	0.025	03/30/01
X01105	XG.2001.376-16	100-41-4	Ethylbenzene	ND	mg / Kg	1	0.005	03/30/01
X01105	XG.2001.376-16		Freon 113	ND	mg / Kg	1	0.025	03/30/01
X01105	XG.2001.376-16	75-71-8	Freon 12	ND	mg / Kg	1	0.05	03/30/01
X01105	XG.2001.376-16	74-88-4	Iodomethane	ND	mg / Kg	1	0.025	03/30/01
X01105	XG.2001.376-16	1634-04-4	Methyl t-butyl ether (MTBE)	ND	mg / Kg	1	0.005	03/30/01
X01105	XG.2001.376-16	75-09-2	Methylene chloride	ND	mg / Kg	1	0.05	03/30/01
X01105	XG.2001.376-16	91-20-3	Naphthalene	ND	mg / Kg	1	0.025	03/30/01
X01105	XG.2001.376-16	95-47-6	o-Xylene	ND	mg / Kg	1	0.005	03/30/
X01105	XG.2001.376-16	108-38-3/106-42	p/m Xylenes	ND	mg / Kg	1	0.01	03/30
X01105	XG.2001.376-16	100-42-5	Styrene	ND	mg / Kg	1	0.005	03/30/01
X01105	XG.2001.376-16	156-60-5	t-1,2 Dichloroethene	ND	mg / Kg	1	0.005	03/30/01
X01105	XG.2001.376-16	10061-02-6	t-1,3 Dichloropropene	ND	mg / Kg	1	0.005	03/30/01
X01105	XG.2001.376-16	127-18-4	Tetrachloroethene	ND	mg / Kg	1	0.005	03/30/01
X01105	XG.2001.376-16	108-88-3	Toluene	ND	mg / Kg	1	0.005	03/30/01
X01105	XG.2001.376-16	79-01-6	Trichloroethene	ND	mg / Kg	1	0.005	03/30/01
X01105	XG.2001.376-16	75-69-4	Trichlorofluoromethane	ND	mg / Kg	1	0.025	03/30/01
X01105	XG.2001.376-16	108-05-4	Vinyl acetate	ND	mg / Kg	1	0.025	03/30/01
X01105	XG.2001.376-16	75-01-4	Vinyl chloride	ND	mg / Kg	1	0.025	03/30/01
X01105-022		**SW846 8260A Purgeable VOCs by GC/MS**						
X01105	XG.2001.384-1	75-34-3	1,1 Dichloroethane	ND	mg / Kg	1	0.005	04/03/01
X01105	XG.2001.384-1	75-34-3	1,1 Dichloroethene	ND	mg / Kg	1	0.005	04/03/01
X01105	XG.2001.384-1	71-55-6	1,1,1 Trichloroethane	ND	mg / Kg	1	0.005	04/03/01
X01105	XG.2001.384-1	630-20-6	1,1,1,2 Tetrachloroethane	ND	mg / Kg	1	0.005	04/03/01
X01105	XG.2001.384-1	79-00-5	1,1,2 Trichloroethane	ND	mg / Kg	1	0.005	04/03/01
X01105	XG.2001.384-1	79-34-5	1,1,2,2 Tetrachloroethane	ND	mg / Kg	1	0.005	04/03/01
X01105	XG.2001.384-1	106-93-4	1,2 Dibromoethane (EDB)	ND	mg / Kg	1	0.005	04/03/01
X01105	XG.2001.384-1	95-50-1	1,2 Dichlorobenzene	ND	mg / Kg	1	0.005	04/03/01
X01105	XG.2001.384-1	107-06-2	1,2 Dichloroethane	ND	mg / Kg	1	0.005	04/03/01
X01105	XG.2001.384-1	78-87-5	1,2 Dichloropropane	ND	mg / Kg	1	0.005	04/03/01
X01105	XG.2001.384-1	96-18-4	1,2,3 Trichloropropane	ND	mg / Kg	1	0.005	04/03/01
X01105	XG.2001.384-1	95-63-6	1,2,4-Trimethylbenzene	ND	mg / Kg	1	0.005	04/03/01
X01105	XG.2001.384-1	541-73-1	1,3 Dichlorobenzene	ND	mg / Kg	1	0.005	04/03/01
X01105	XG.2001.384-1	108-67-8	1,3,5-Trimethylbenzene	ND	mg / Kg	1	0.005	04/0

Quality Control Summary

Explanation of codes

D *Not applicable due to sample dilution*
L *Not applicable due to MDL proximity*

Client: **CH2MHILL**
Project: **0103365** **160660.02.FF.SA**

X01105	XG.2001.384-1	764-41-0	1,4 Dichloro-2-butene	ND	mg / Kg	1	0.05	04/03/01
X01105	XG.2001.384-1	106-46-7	1,4 Dichlorobenzene	ND	mg / Kg	1	0.005	04/03/01
X01105	XG.2001.384-1	78-93-3	2-Butanone (MEK)	ND	mg / Kg	1	0.025	04/03/01
X01105	XG.2001.384-1	110-75-8	2-Chloroethylvinylether	ND	mg / Kg	1	0.025	04/03/01
X01105	XG.2001.384-1	591-78-6	2-Hexanone (MBK)	ND	mg / Kg	1	0.025	04/03/01
X01105	XG.2001.384-1	108-10-1	4-Methyl-2-pentanone (MIBK)	ND	mg / Kg	1	0.025	04/03/01
X01105	XG.2001.384-1	67-64-1	Acetone	ND	mg / Kg	1	0.05	04/03/01
X01105	XG.2001.384-1	107-02-8	Acrolein	ND	mg / Kg	1	0.1	04/03/01
X01105	XG.2001.384-1	107-13-1	Acrylonitrile	ND	mg / Kg	1	0.1	04/03/01
X01105	XG.2001.384-1	71-43-2	Benzene	ND	mg / Kg	1	0.005	04/03/01
X01105	XG.2001.384-1	75-27-4	Bromodichloromethane	ND	mg / Kg	1	0.005	04/03/01
X01105	XG.2001.384-1	75-25-2	Bromoform	ND	mg / Kg	1	0.005	04/03/01
X01105	XG.2001.384-1	74-83-9	Bromomethane	ND	mg / Kg	1	0.025	04/03/01
X01105	XG.2001.384-1	75-15-0	Carbon disulfide	ND	mg / Kg	1	0.025	04/03/01
X01105	XG.2001.384-1	56-23-5	Carbon tetrachloride	ND	mg / Kg	1	0.005	04/03/01
X01105	XG.2001.384-1	108-90-7	Chlorobenzene	ND	mg / Kg	1	0.005	04/03/01
X01105	XG.2001.384-1	124-48-1	Chlorodibromomethane	ND	mg / Kg	1	0.005	04/03/01
X01105	XG.2001.384-1	75-00-3	Chloroethane	ND	mg / Kg	1	0.025	04/03/01
X01105	XG.2001.384-1	67-66-3	Chloroform	ND	mg / Kg	1	0.005	04/03/01
X01105	XG.2001.384-1	74-87-3	Chloromethane	ND	mg / Kg	1	0.025	04/03/01
X01105	XG.2001.384-1	156-59-2	cis-1,2 dichloroethene	ND	mg / Kg	1	0.005	04/03/01
X01105	XG.2001.384-1	10061-01-5	cis-1,3 dichloropropene	ND	mg / Kg	1	0.005	04/03/01
X01105	XG.2001.384-1	74-95-3	Dibromomethane	ND	mg / Kg	1	0.005	04/03/01
[illegible]	XG.2001.384-1	97-63-2	Ethyl methacrylate	ND	mg / Kg	1	0.025	04/03/01
X[illegible]05	XG.2001.384-1	100-41-4	Ethylbenzene	ND	mg / Kg	1	0.005	04/03/01
X01105	XG.2001.384-1		Freon 113	ND	mg / Kg	1	0.025	04/03/01
X01105	XG.2001.384-1	75-71-8	Freon 12	ND	mg / Kg	1	0.05	04/03/01
X01105	XG.2001.384-1	74-88-4	Iodomethane	ND	mg / Kg	1	0.025	04/03/01
X01105	XG.2001.384-1	1634-04-4	Methyl t-butyl ether (MTBE)	ND	mg / Kg	1	0.005	04/03/01
X01105	XG.2001.384-1	75-09-2	Methylene chloride	ND	mg / Kg	1	0.05	04/03/01
X01105	XG.2001.384-1	91-20-3	Naphthalene	ND	mg / Kg	1	0.025	04/03/01
X01105	XG.2001.384-1	95-47-6	o-Xylene	ND	mg / Kg	1	0.005	04/03/01
X01105	XG.2001.384-1	108-38-3/106-42	p/m Xylenes	ND	mg / Kg	1	0.01	04/03/01
X01105	XG.2001.384-1	100-42-5	Styrene	ND	mg / Kg	1	0.005	04/03/01
X01105	XG.2001.384-1	156-60-5	t-1,2 Dichloroethene	ND	mg / Kg	1	0.005	04/03/01
X01105	XG.2001.384-1	10061-02-6	t-1,3 Dichloropropene	ND	mg / Kg	1	0.005	04/03/01
X01105	XG.2001.384-1	127-18-4	Tetrachloroethene	ND	mg / Kg	1	0.005	04/03/01
X01105	XG.2001.384-1	108-88-3	Toluene	ND	mg / Kg	1	0.005	04/03/01
X01105	XG.2001.384-1	79-01-6	Trichloroethene	ND	mg / Kg	1	0.005	04/03/01
X01105	XG.2001.384-1	75-69-4	Trichlorofluoromethane	ND	mg / Kg	1	0.025	04/03/01
X01105	XG.2001.384-1	108-05-4	Vinyl acetate	ND	mg / Kg	1	0.025	04/03/01
X01105	XG.2001.384-1	75-01-4	Vinyl chloride	ND	mg / Kg	1	0.025	04/03/01
X01105-037		**SW846 8260A Purgeable VOCs by GC/MS**						
X01105	XG.2001.388-1	75-34-3	1,1 Dichloroethane	ND	mg / Kg	1	0.005	04/04/01
X01105	XG.2001.388-1	75-34-3	1,1 Dichloroethene	ND	mg / Kg	1	0.005	04/04/01
X01105	XG.2001.388-1	71-55-6	1,1,1 Trichloroethane	ND	mg / Kg	1	0.005	04/04/01
X01105	XG.2001.388-1	630-20-6	1,1,1,2 Tetrachloroethane	ND	mg / Kg	1	0.005	04/04/01
X[illegible]05	XG.2001.388-1	79-00-5	1,1,2 Trichloroethane	ND	mg / Kg	1	0.005	04/04/01
[illegible]5	XG.2001.388-1	79-34-5	1,1,2,2 Tetrachloroethane	ND	mg / Kg	1	0.005	04/04/01

Quality Control Summary

Client: **CH2MHILL**

Project: **0103365** **160660.02.FF.SA**

Explanation of codes

D *Not applicable due to sample dilut*

L *Not applicable due to MDL proximi*

X01105	XG.2001.388-1	106-93-4	1,2 Dibromoethane (EDB)	ND	mg / Kg	1	0.005	04/04/01
X01105	XG.2001.388-1	95-50-1	1,2 Dichlorobenzene	ND	mg / Kg	1	0.005	04/04/01
X01105	XG.2001.388-1	107-06-2	1,2 Dichloroethane	ND	mg / Kg	1	0.005	04/04/01
X01105	XG.2001.388-1	78-87-5	1,2 Dichloropropane	ND	mg / Kg	1	0.005	04/04/01
X01105	XG.2001.388-1	96-18-4	1,2,3 Trichloropropane	ND	mg / Kg	1	0.005	04/04/01
X01105	XG.2001.388-1	95-63-6	1,2,4-Trimethylbenzene	ND	mg / Kg	1	0.005	04/04/01
X01105	XG.2001.388-1	541-73-1	1,3 Dichlorobenzene	ND	mg / Kg	1	0.005	04/04/01
X01105	XG.2001.388-1	108-67-8	1,3,5-Trimethylbenzene	ND	mg / Kg	1	0.005	04/04/01
X01105	XG.2001.388-1	764-41-0	1,4 Dichloro-2-butene	ND	mg / Kg	1	0.05	04/04/01
X01105	XG.2001.388-1	106-46-7	1,4 Dichlorobenzene	ND	mg / Kg	1	0.005	04/04/01
X01105	XG.2001.388-1	78-93-3	2-Butanone (MEK)	ND	mg / Kg	1	0.025	04/04/01
X01105	XG.2001.388-1	110-75-8	2-Chloroethylvinylether	ND	mg / Kg	1	0.025	04/04/01
X01105	XG.2001.388-1	591-78-6	2-Hexanone (MBK)	ND	mg / Kg	1	0.025	04/04/01
X01105	XG.2001.388-1	108-10-1	4-Methyl-2-pentanone (MIBK)	ND	mg / Kg	1	0.025	04/04/01
X01105	XG.2001.388-1	67-64-1	Acetone	ND	mg / Kg	1	0.05	04/04/01
X01105	XG.2001.388-1	107-02-8	Acrolein	ND	mg / Kg	1	0.1	04/04/01
X01105	XG.2001.388-1	107-13-1	Acrylonitrile	ND	mg / Kg	1	0.1	04/04/01
X01105	XG.2001.388-1	71-43-2	Benzene	ND	mg / Kg	1	0.005	04/04/01
X01105	XG.2001.388-1	75-27-4	Bromodichloromethane	ND	mg / Kg	1	0.005	04/04/01
X01105	XG.2001.388-1	75-25-2	Bromoform	ND	mg / Kg	1	0.005	04/04/01
X01105	XG.2001.388-1	74-83-9	Bromomethane	ND	mg / Kg	1	0.025	04/04/01
X01105	XG.2001.388-1	75-15-0	Carbon disulfide	ND	mg / Kg	1	0.025	04/04/01
X01105	XG.2001.388-1	56-23-5	Carbon tetrachloride	ND	mg / Kg	1	0.005	04/04/01
X01105	XG.2001.388-1	108-90-7	Chlorobenzene	ND	mg / Kg	1	0.005	04/04
X01105	XG.2001.388-1	124-48-1	Chlorodibromomethane	ND	mg / Kg	1	0.005	04/04
X01105	XG.2001.388-1	75-00-3	Chloroethane	ND	mg / Kg	1	0.025	04/04/01
X01105	XG.2001.388-1	67-66-3	Chloroform	ND	mg / Kg	1	0.005	04/04/01
X01105	XG.2001.388-1	74-87-3	Chloromethane	ND	mg / Kg	1	0.025	04/04/01
X01105	XG.2001.388-1	156-59-2	cis-1,2 dichloroethene	ND	mg / Kg	1	0.005	04/04/01
X01105	XG.2001.388-1	10061-01-5	cis-1,3 dichloropropene	ND	mg / Kg	1	0.005	04/04/01
X01105	XG.2001.388-1	74-95-3	Dibromomethane	ND	mg / Kg	1	0.005	04/04/01
X01105	XG.2001.388-1	97-63-2	Ethyl methacrylate	ND	mg / Kg	1	0.025	04/04/01
X01105	XG.2001.388-1	100-41-4	Ethylbenzene	ND	mg / Kg	1	0.005	04/04/01
X01105	XG.2001.388-1		Freon 113	ND	mg / Kg	1	0.025	04/04/01
X01105	XG.2001.388-1	75-71-8	Freon 12	ND	mg / Kg	1	0.05	04/04/01
X01105	XG.2001.388-1	74-88-4	Iodomethane	ND	mg / Kg	1	0.025	04/04/01
X01105	XG.2001.388-1	1634-04-4	Methyl t-butyl ether (MTBE)	ND	mg / Kg	1	0.005	04/04/01
X01105	XG.2001.388-1	75-09-2	Methylene chloride	ND	mg / Kg	1	0.05	04/04/01
X01105	XG.2001.388-1	91-20-3	Naphthalene	ND	mg / Kg	1	0.025	04/04/01
X01105	XG.2001.388-1	95-47-6	o-Xylene	ND	mg / Kg	1	0.005	04/04/01
X01105	XG.2001.388-1	108-38-3/106-42	p/m Xylenes	ND	mg / Kg	1	0.01	04/04/01
X01105	XG.2001.388-1	100-42-5	Styrene	ND	mg / Kg	1	0.005	04/04/01
X01105	XG.2001.388-1	156-60-5	t-1,2 Dichloroethene	ND	mg / Kg	1	0.005	04/04/01
X01105	XG.2001.388-1	10061-02-6	t-1,3 Dichloropropene	ND	mg / Kg	1	0.005	04/04/01
X01105	XG.2001.388-1	127-18-4	Tetrachloroethene	ND	mg / Kg	1	0.005	04/04/01
X01105	XG.2001.388-1	108-88-3	Toluene	ND	mg / Kg	1	0.005	04/04/01
X01105	XG.2001.388-1	79-01-6	Trichloroethene	ND	mg / Kg	1	0.005	04/04/01
X01105	XG.2001.388-1	75-69-4	Trichlorofluoromethane	ND	mg / Kg	1	0.025	04/04/01
X01105	XG.2001.388-1	108-05-4	Vinyl acetate	ND	mg / Kg	1	0.025	04/04
X01105	XG.2001.388-1	75-01-4	Vinyl chloride	ND	mg / Kg	1	0.025	04/04

Quality Control Summary

Explanation of codes

D *Not applicable due to sample dilution*
L *Not applicable due to MDL proximity*

: **CH2MHILL**
Project: **0103365** **160660.02.FF.SA**

X0194-001		**SW846 5030A/8015A GRO by GC/FID**							
X0194	XG.2001.325-1		Gasoline Range Organics	ND	mg / Kg	1	0.25		03/16/01
X0194-007		**SW846 5030A/8015A GRO by GC/FID**							
X0194	XG.2001.328-1		Gasoline Range Organics	ND	mg / Kg	1	0.25		03/20/01
X0194-010		**SW846 5030A/8015A GRO by GC/FID**							
X0194	XG.2001.337-1		Gasoline Range Organics	ND	mg / Kg	1	0.25		03/21/01
X0194-014		**SW846 5030A/8015A GRO by GC/FID**							
X0194	XG.2001.364-1		Gasoline Range Organics	ND	mg / Kg	1	0.25		03/27/01
X0194-019		**SW846 5030A/8015A GRO by GC/FID**							
X0194	XG.2001.364-6		Gasoline Range Organics	ND	mg / Kg	1	0.25		03/28/01
X0194-025		**SW846 5030A/8015A GRO by GC/FID**							
X0194	XG.2001.394-1		Gasoline Range Organics	ND	mg / Kg	1	0.25		04/05/01
X0198-001		**SW846 ME/8015A Diesel Range Organics by GC/FID**							
X0198	XG.2001.334-1		Diesel Range Organics	ND	mg / Kg	1	25		03/20/01
X0198-008		**SW846 ME/8015A Diesel Range Organics by GC/FID**							
X0198	XG.2001.338-1		Diesel Range Organics	ND	mg / Kg	1	25		03/21/01
X0198-012		**SW846 ME/8015A Diesel Range Organics by GC/FID**							
X0198	XG.2001.361-1		Diesel Range Organics	ND	mg / Kg	1	25		03/27/01
-017		**SW846 ME/8015A Diesel Range Organics by GC/FID**							
X0198	XG.2001.393-1		Diesel Range Organics	ND	mg / Kg	1	25		04/05/01

QC Type **MS: Matrix Spike** QC Matrix **SOLID**

QC Group	Run Sequence	CAS #	Analyte	Result	Units	Dilution Factor	Detection Limit	Code	Run Date
X01105-016		**SW846 8260A Purgeable VOCs by GC/MS**							
X01105	XG.2001.376-15	75-34-3	1,1 Dichloroethene	111	% Recovery	1	NA		03/29/01
X01105	XG.2001.376-15	106-46-7	1,4 Dichlorobenzene	101	% Recovery	1	NA		03/29/01
X01105	XG.2001.376-15	71-43-2	Benzene	108	% Recovery	1	NA		03/29/01
X01105	XG.2001.376-15	108-90-7	Chlorobenzene	105	% Recovery	1	NA		03/29/01
X01105	XG.2001.376-15	108-88-3	Toluene	108	% Recovery	1	NA		03/29/01
X01105	XG.2001.376-15	79-01-6	Trichloroethene	107	% Recovery	1	NA		03/29/01
X0194-005		**SW846 5030A/8015A GRO by GC/FID**							
X0194	XG.2001.325-5		Gasoline Range Organics	111	% Recovery	1	NA		03/16/01
X0198-005		**SW846 ME/8015A Diesel Range Organics by GC/FID**							
X0198	XG.2001.334-5		Diesel Range Organics	89	% Recovery	1	NA		03/20/01

Quality Control Summary

Client: **CH2MHILL**

Project: **0103365** **160660.02.FF.SA**

Explanation of codes

D *Not applicable due to sample diluti*

L *Not applicable due to MDL proximi*

QC Type **MSD: Matrix Spike Duplicate Accuracy** QC Matrix **SOLID**

QC Group	Run Sequence	CAS #	Analyte	Result	Units	Dilution Factor	Detection Limit	Code	Run Date
X01105-020		**SW846 8260A Purgeable VOCs by GC/MS**							
X01105	XG.2001.376-18	75-34-3	1,1 Dichloroethene	111	% Recovery	1	NA		03/30/0
X01105	XG.2001.376-18	106-46-7	1,4 Dichlorobenzene	102	% Recovery	1	NA		03/30/0
X01105	XG.2001.376-18	71-43-2	Benzene	108	% Recovery	1	NA		03/30/0
X01105	XG.2001.376-18	108-90-7	Chlorobenzene	104	% Recovery	1	NA		03/30/0
X01105	XG.2001.376-18	108-88-3	Toluene	107	% Recovery	1	NA		03/30/0
X01105	XG.2001.376-18	79-01-6	Trichloroethene	106	% Recovery	1	NA		03/30/0
X0194-006		**SW846 5030A/8015A GRO by GC/FID**							
X0194	XG.2001.325-6		Gasoline Range Organics	113	% Recovery	1	NA		03/16/0
X0198-006		**SW846 ME/8015A Diesel Range Organics by GC/FID**							
X0198	XG.2001.334-6		Diesel Range Organics	90	% Recovery	1	NA		03/20/0

QC Type **MSD: Matrix Spike Duplicate Precision** QC Matrix **SOLID**

QC Group	Run Sequence	CAS #	Analyte	Result	Units	Dilution Factor	Detection Limit	Code	Run Date
X01105-020		**SW846 8260A Purgeable VOCs by GC/MS**							
X01105	XG.2001.376-18	75-34-3	1,1 Dichloroethene	< 1	RPD	1	NA		03/30/0
X01105	XG.2001.376-18	106-46-7	1,4 Dichlorobenzene	< 1	RPD	1	NA		03/30/0
X01105	XG.2001.376-18	71-43-2	Benzene	< 1	RPD	1	NA		03/30/0
X01105	XG.2001.376-18	108-90-7	Chlorobenzene	1	RPD	1	NA		03/30/0
X01105	XG.2001.376-18	108-88-3	Toluene	1	RPD	1	NA		03/30/0
X01105	XG.2001.376-18	79-01-6	Trichloroethene	< 1	RPD	1	NA		03/30/0
X0194-006		**SW846 5030A/8015A GRO by GC/FID**							
X0194	XG.2001.325-6		Gasoline Range Organics	2	RPD	1	NA		03/16/0
X0198-006		**SW846 ME/8015A Diesel Range Organics by GC/FID**							
X0198	XG.2001.334-6		Diesel Range Organics	1	RPD	1	NA		03/20/0

Quality Control Summary

t: CH2MHILL

Project: 0103365 160660.02.FF.SA

Explanation of codes

D *Not applicable due to sample dilution*

L *Not applicable due to MDL proximity*

QC Type **LCS: Lab Control Spike** QC Matrix **WATER**

QC Group	Run Sequence	CAS #	Analyte	Result	Units	Dilution Factor	Detection Limit	Code	Run Date
X01108-008		**SW846 8260A Purgeable VOCs by GC/MS**							
X01108	XG.2001.371-4	75-34-3	1,1 Dichloroethene	109	% Recovery	1	NA		03/30/01
X01108	XG.2001.371-4	106-46-7	1,4 Dichlorobenzene	103	% Recovery	1	NA		03/30/01
X01108	XG.2001.371-4	71-43-2	Benzene	116	% Recovery	1	NA		03/30/01
X01108	XG.2001.371-4	108-90-7	Chlorobenzene	109	% Recovery	1	NA		03/30/01
X01108	XG.2001.371-4	108-88-3	Toluene	111	% Recovery	1	NA		03/30/01
X01108	XG.2001.371-4	79-01-6	Trichloroethene	110	% Recovery	1	NA		03/30/01
X01117-008		**SW846 5030A/8015A GRO by GC/FID**							
X01117	XG.2001.400-2		Gasoline Range Organics	128	% Recovery	1	NA		04/06/01
X01119-002		**SW846 ME/8015A Diesel Range Organics by GC/FID**							
X01119	XG.2001.393-6		Diesel Range Organics	93	% Recovery	1	NA		04/05/01
X0199-002		**SW846 3510B/8270B SVOCs by GC/MS**							
X0199	XG.2001.343-2	120-82-1	1,2,4-Trichlorobenzene	67	% Recovery	1	NA		03/21/01
X0199	XG.2001.343-2	106-46-7	1,4-Dichlorobenzene	68	% Recovery	1	NA		03/21/01
X0199	XG.2001.343-2	121-14-2	2,4-Dinitrotoluene	88	% Recovery	1	NA		03/21/01
	XG.2001.343-2	95-57-8	2-Chlorophenol	67	% Recovery	1	NA		03/21/01
X0199	XG.2001.343-2	59-50-7	4-Chloro-3-methylphenol	70	% Recovery	1	NA		03/21/01
X0199	XG.2001.343-2	100-02-7	4-Nitrophenol	31	% Recovery	1	NA		03/21/01
X0199	XG.2001.343-2	83-32-9	Acenaphthene	86	% Recovery	1	NA		03/21/01
X0199	XG.2001.343-2	117-84-0	di-n-Octylpthalate	100	% Recovery	1	NA		03/21/01
X0199	XG.2001.343-2	621-64-7	n-Nitroso-di-n-propylamine	87	% Recovery	1	NA		03/21/01
X0199	XG.2001.343-2	87-86-5	Pentachlorophenol	78	% Recovery	1	NA		03/21/01
X0199	XG.2001.343-2	108-95-2	Phenol	34	% Recovery	1	NA		03/21/01
X0199	XG.2001.343-2	129-00-0	Pyrene	87	% Recovery	1	NA		03/21/01

QC Type **LCSD: Lab Control Spike Duplicate Accuracy** QC Matrix **WATER**

QC Group	Run Sequence	CAS #	Analyte	Result	Units	Dilution Factor	Detection Limit	Code	Run Date
X01108-009		**SW846 8260A Purgeable VOCs by GC/MS**							
X01108	XG.2001.371-5	75-34-3	1,1 Dichloroethene	106	% Recovery	1	NA		03/30/01
X01108	XG.2001.371-5	106-46-7	1,4 Dichlorobenzene	104	% Recovery	1	NA		03/30/01
X01108	XG.2001.371-5	71-43-2	Benzene	116	% Recovery	1	NA		03/30/01
X01108	XG.2001.371-5	108-90-7	Chlorobenzene	109	% Recovery	1	NA		03/30/01
X01108	XG.2001.371-5	108-88-3	Toluene	110	% Recovery	1	NA		03/30/01
X01108	XG.2001.371-5	79-01-6	Trichloroethene	108	% Recovery	1	NA		03/30/01
X01117-009		**SW846 5030A/8015A GRO by GC/FID**							
X01117	XG.2001.400-3		Gasoline Range Organics	128	% Recovery	1	NA		04/06/01
119-003		**SW846 ME/8015A Diesel Range Organics by GC/FID**							
X01119	XG.2001.393-7		Diesel Range Organics	93	% Recovery	1	NA		04/05/01

Quality Control Summary

Client: **CH2MHILL**

Project: **0103365** **160660.02.FF.SA**

Explanation of codes

D *Not applicable due to sample dilut*

L *Not applicable due to MDL proximi*

X0199-003		**SW846 3510B/8270B SVOCs by GC/MS**						
X0199	XG.2001.343-3	120-82-1	1,2,4-Trichlorobenzene	68	% Recovery	1	NA	03/21/01
X0199	XG.2001.343-3	106-46-7	1,4-Dichlorobenzene	70	% Recovery	1	NA	03/21/01
X0199	XG.2001.343-3	121-14-2	2,4-Dinitrotoluene	89	% Recovery	1	NA	03/21/01
X0199	XG.2001.343-3	95-57-8	2-Chlorophenol	75	% Recovery	1	NA	03/21/01
X0199	XG.2001.343-3	59-50-7	4-Chloro-3-methylphenol	78	% Recovery	1	NA	03/21/01
X0199	XG.2001.343-3	100-02-7	4-Nitrophenol	32	% Recovery	1	NA	03/21/01
X0199	XG.2001.343-3	83-32-9	Acenaphthene	87	% Recovery	1	NA	03/21/01
X0199	XG.2001.343-3	117-84-0	di-n-Octylpthalate	110	% Recovery	1	NA	03/21/01
X0199	XG.2001.343-3	621-64-7	n-Nitroso-di-n-propylamine	91	% Recovery	1	NA	03/21/01
X0199	XG.2001.343-3	87-86-5	Pentachlorophenol	80	% Recovery	1	NA	03/21/01
X0199	XG.2001.343-3	108-95-2	Phenol	38	% Recovery	1	NA	03/21/01
X0199	XG.2001.343-3	129-00-0	Pyrene	90	% Recovery	1	NA	03/21/01

QC Type **LCSD: Lab Control Spike Duplicate Precision** QC Matrix **WATER**

QC Group	Run Sequence	CAS #	Analyte	Result	Units	Dilution Factor	Detection Limit	Code	Run Date
X01108-009		**SW846 8260A Purgeable VOCs by GC/MS**							
X01108	XG.2001.371-5	75-34-3	1,1 Dichloroethene	3	RPD	1	NA		03/30/01
X01108	XG.2001.371-5	106-46-7	1,4 Dichlorobenzene	< 1	RPD	1	NA		03/30/01
X01108	XG.2001.371-5	71-43-2	Benzene	< 1	RPD	1	NA		03/30
X01108	XG.2001.371-5	108-90-7	Chlorobenzene	< 1	RPD	1	NA		03/30/01
X01108	XG.2001.371-5	108-88-3	Toluene	< 1	RPD	1	NA		03/30/01
X01108	XG.2001.371-5	79-01-6	Trichloroethene	2	RPD	1	NA		03/30/01
X01117-009		**SW846 5030A/8015A GRO by GC/FID**							
X01117	XG.2001.400-3		Gasoline Range Organics	< 1	RPD	1	NA		04/06/01
X01119-003		**SW846 ME/8015A Diesel Range Organics by GC/FID**							
X01119	XG.2001.393-7		Diesel Range Organics	< 1	RPD	1	NA		04/05/01
X0199-003		**SW846 3510B/8270B SVOCs by GC/MS**							
X0199	XG.2001.343-3	120-82-1	1,2,4-Trichlorobenzene	< 1	RPD	1	NA		03/21/01
X0199	XG.2001.343-3	106-46-7	1,4-Dichlorobenzene	3	RPD	1	NA		03/21/01
X0199	XG.2001.343-3	121-14-2	2,4-Dinitrotoluene	< 1	RPD	1	NA		03/21/01
X0199	XG.2001.343-3	95-57-8	2-Chlorophenol	12	RPD	1	NA		03/21/01
X0199	XG.2001.343-3	59-50-7	4-Chloro-3-methylphenol	11	RPD	1	NA		03/21/01
X0199	XG.2001.343-3	100-02-7	4-Nitrophenol	5	RPD	1	NA		03/21/01
X0199	XG.2001.343-3	83-32-9	Acenaphthene	2	RPD	1	NA		03/21/01
X0199	XG.2001.343-3	117-84-0	di-n-Octylpthalate	10	RPD	1	NA		03/21/01
X0199	XG.2001.343-3	621-64-7	n-Nitroso-di-n-propylamine	5	RPD	1	NA		03/21/01
X0199	XG.2001.343-3	87-86-5	Pentachlorophenol	3	RPD	1	NA		03/21/01
X0199	XG.2001.343-3	108-95-2	Phenol	8	RPD	1	NA		03/21/01
X0199	XG.2001.343-3	129-00-0	Pyrene	3	RPD	1	NA		03/21/01

Quality Control Summary

Explanation of codes

D *Not applicable due to sample dilution*
L *Not applicable due to MDL proximity*

Client: CH2MHILL
Project: 0103365 160660.02.FF.SA

QC Type **MB: Method Blank** QC Matrix **WATER**

QC Group	Run Sequence	CAS #	Analyte	Result	Units	Dilution Factor	Detection Limit	Code	Run Date
X01108-001		SW846 8260A Purgeable VOCs by GC/MS							
X01108	XG.2001.371-1	75-34-3	1,1 Dichloroethane	ND	ug / L	1	1		03/30/01
X01108	XG.2001.371-1	75-34-3	1,1 Dichloroethene	ND	ug / L	1	1		03/30/01
X01108	XG.2001.371-1	71-55-6	1,1,1 Trichloroethane	ND	ug / L	1	1		03/30/01
X01108	XG.2001.371-1	630-20-6	1,1,1,2 Tetrachloroethane	ND	ug / L	1	1		03/30/01
X01108	XG.2001.371-1	79-00-5	1,1,2 Trichloroethane	ND	ug / L	1	1		03/30/01
X01108	XG.2001.371-1	79-34-5	1,1,2,2 Tetrachloroethane	ND	ug / L	1	1		03/30/01
X01108	XG.2001.371-1	106-93-4	1,2 Dibromoethane (EDB)	ND	ug / L	1	1		03/30/01
X01108	XG.2001.371-1	95-50-1	1,2 Dichlorobenzene	ND	ug / L	1	1		03/30/01
X01108	XG.2001.371-1	107-06-2	1,2 Dichloroethane	ND	ug / L	1	1		03/30/01
X01108	XG.2001.371-1	78-87-5	1,2 Dichloropropane	ND	ug / L	1	1		03/30/01
X01108	XG.2001.371-1	96-18-4	1,2,3 Trichloropropane	ND	ug / L	1	1		03/30/01
X01108	XG.2001.371-1	95-63-6	1,2,4-Trimethylbenzene	ND	ug / L	1	1		03/30/01
X01108	XG.2001.371-1	541-73-1	1,3 Dichlorobenzene	ND	ug / L	1	1		03/30/01
X01108	XG.2001.371-1	108-67-8	1,3,5-Trimethylbenzene	ND	ug / L	1	1		03/30/01
X01108	XG.2001.371-1	764-41-0	1,4 Dichloro-2-butene	ND	ug / L	1	10		03/30/01
X01108	XG.2001.371-1	106-46-7	1,4 Dichlorobenzene	ND	ug / L	1	1		03/30/01
X01108	XG.2001.371-1	78-93-3	2-Butanone (MEK)	ND	ug / L	1	5		03/30/01
X01108	XG.2001.371-1	110-75-8	2-Chloroethylvinylether	ND	ug / L	1	5		03/30/01
X01108	XG.2001.371-1	591-78-6	2-Hexanone (MBK)	ND	ug / L	1	5		03/30/01
X01108	XG.2001.371-1	108-10-1	4-Methyl-2-pentanone (MIBK)	ND	ug / L	1	5		03/30/01
X01108	XG.2001.371-1	67-64-1	Acetone	ND	ug / L	1	10		03/30/01
X01108	XG.2001.371-1	107-02-8	Acrolein	ND	ug / L	1	20		03/30/01
X01108	XG.2001.371-1	107-13-1	Acrylonitrile	ND	ug / L	1	20		03/30/01
X01108	XG.2001.371-1	71-43-2	Benzene	ND	ug / L	1	1		03/30/01
X01108	XG.2001.371-1	75-27-4	Bromodichloromethane	ND	ug / L	1	1		03/30/01
X01108	XG.2001.371-1	75-25-2	Bromoform	ND	ug / L	1	1		03/30/01
X01108	XG.2001.371-1	74-83-9	Bromomethane	ND	ug / L	1	5		03/30/01
X01108	XG.2001.371-1	75-15-0	Carbon disulfide	ND	ug / L	1	5		03/30/01
X01108	XG.2001.371-1	56-23-5	Carbon tetrachloride	ND	ug / L	1	1		03/30/01
X01108	XG.2001.371-1	108-90-7	Chlorobenzene	ND	ug / L	1	1		03/30/01
X01108	XG.2001.371-1	124-48-1	Chlorodibromomethane	ND	ug / L	1	1		03/30/01
X01108	XG.2001.371-1	75-00-3	Chloroethane	ND	ug / L	1	5		03/30/01
X01108	XG.2001.371-1	67-66-3	Chloroform	ND	ug / L	1	1		03/30/01
X01108	XG.2001.371-1	74-87-3	Chloromethane	ND	ug / L	1	5		03/30/01
X01108	XG.2001.371-1	156-59-2	cis-1,2 dichloroethene	ND	ug / L	1	1		03/30/01
X01108	XG.2001.371-1	10061-01-5	cis-1,3 dichloropropene	ND	ug / L	1	1		03/30/01
X01108	XG.2001.371-1	74-95-3	Dibromomethane	ND	ug / L	1	1		03/30/01
X01108	XG.2001.371-1	97-63-2	Ethyl methacrylate	ND	ug / L	1	5		03/30/01
X01108	XG.2001.371-1	100-41-4	Ethylbenzene	ND	ug / L	1	1		03/30/01
X01108	XG.2001.371-1		Freon 113	ND	ug / L	1	5		03/30/01
X01108	XG.2001.371-1	75-71-8	Freon 12	ND	ug / L	1	10		03/30/01
X01108	XG.2001.371-1	74-88-4	Iodomethane	ND	ug / L	1	5		03/30/01
X01108	XG.2001.371-1	1634-04-4	Methyl t-butyl ether (MTBE)	ND	ug / L	1	1		03/30/01

Quality Control Summary

Client: **CH2MHILL**

Project: **0103365** **160660.02.FF.SA**

Explanation of codes

D *Not applicable due to sample dilut*

L *Not applicable due to MDL proximi*

X01108	XG.2001.371-1	75-09-2	Methylene chloride	ND	ug / L	1	10	03/30/01
X01108	XG.2001.371-1	91-20-3	Naphthalene	ND	ug / L	1	5	03/30/01
X01108	XG.2001.371-1	95-47-6	o-Xylene	ND	ug / L	1	1	03/30/01
X01108	XG.2001.371-1	108-38-3/106-42	p/m Xylenes	ND	ug / L	1	2	03/30/01
X01108	XG.2001.371-1	100-42-5	Styrene	1.3	ug / L	1	1	03/30/01
X01108	XG.2001.371-1	156-60-5	t-1,2 Dichloroethene	ND	ug / L	1	1	03/30/01
X01108	XG.2001.371-1	10061-02-6	t-1,3 Dichloropropene	ND	ug / L	1	1	03/30/01
X01108	XG.2001.371-1	127-18-4	Tetrachloroethene	ND	ug / L	1	1	03/30/01
X01108	XG.2001.371-1	108-88-3	Toluene	ND	ug / L	1	1	03/30/01
X01108	XG.2001.371-1	79-01-6	Trichloroethene	ND	ug / L	1	1	03/30/01
X01108	XG.2001.371-1	75-69-4	Trichlorofluoromethane	ND	ug / L	1	5	03/30/01
X01108	XG.2001.371-1	108-05-4	Vinyl acetate	ND	ug / L	1	5	03/30/01
X01108	XG.2001.371-1	75-01-4	Vinyl chloride	ND	ug / L	1	5	03/30/01
X01117-007		**SW846 5030A/8015A GRO by GC/FID**						
X01117	XG.2001.400-1		Gasoline Range Organics	ND	mg / L	1	0.05	04/06/01
X01119-001		**SW846 ME/8015A Diesel Range Organics by GC/FID**						
X01119	XG.2001.393-5		Diesel Range Organics	ND	mg / L	1	25	04/05/01
X0199-001		**SW846 3510B/8270B SVOCs by GC/MS**						
X0199	XG.2001.343-1	120-82-1	1,2,4-Trichlorobenzene	ND	ug / L	1	1	03/21/01
X0199	XG.2001.343-1	95-50-1	1,2-Dichlorobenzene	ND	ug / L	1	1	03/21/01
X0199	XG.2001.343-1	541-73-1	1,3-Dichlorobenzene	ND	ug / L	1	1	03/21/01
X0199	XG.2001.343-1	106-46-7	1,4-Dichlorobenzene	ND	ug / L	1	1	03/21
X0199	XG.2001.343-1	90-12-0	1-Methylnaphthalene	ND	ug / L	1	1	03/21/0
X0199	XG.2001.343-1	58-90-2	2,3,4,6-Tetrachlorophenol	ND	ug / L	1	5	03/21/01
X0199	XG.2001.343-1	95-95-4	2,4,5-Trichlorophenol	ND	ug / L	1	5	03/21/01
X0199	XG.2001.343-1	88-06-2	2,4,6-Trichlorophenol	ND	ug / L	1	5	03/21/01
X0199	XG.2001.343-1	120-83-2	2,4-Dichlorophenol	ND	ug / L	1	5	03/21/01
X0199	XG.2001.343-1	105-67-9	2,4-Dimethylphenol	ND	ug / L	1	1	03/21/01
X0199	XG.2001.343-1	51-28-5	2,4-Dinitrophenol	ND	ug / L	1	10	03/21/01
X0199	XG.2001.343-1	121-14-2	2,4-Dinitrotoluene	ND	ug / L	1	5	03/21/01
X0199	XG.2001.343-1	606-20-2	2,6-Dinitrotoluene	ND	ug / L	1	5	03/21/01
X0199	XG.2001.343-1	91-58-7	2-Chloronaphthalene	ND	ug / L	1	1	03/21/01
X0199	XG.2001.343-1	95-57-8	2-Chlorophenol	ND	ug / L	1	1	03/21/01
X0199	XG.2001.343-1	91-57-6	2-Methylnaphthalene	ND	ug / L	1	1	03/21/01
X0199	XG.2001.343-1	95-48-7	2-Methylphenol	ND	ug / L	1	1	03/21/01
X0199	XG.2001.343-1	88-74-4	2-Nitroaniline	ND	ug / L	1	5	03/21/01
X0199	XG.2001.343-1	88-75-5	2-Nitrophenol	ND	ug / L	1	5	03/21/01
X0199	XG.2001.343-1		3+4 Methylphenol	ND	ug / L	1	1	03/21/01
X0199	XG.2001.343-1	91-94-1	3,3-Dichlorobenzidine	ND	ug / L	1	10	03/21/01
X0199	XG.2001.343-1	99-09-2	3-Nitroaniline	ND	ug / L	1	5	03/21/01
X0199	XG.2001.343-1	534-52-1	4,6-Dinitro-2-methylphenol	ND	ug / L	1	10	03/21/01
X0199	XG.2001.343-1	101-55-3	4-Bromophenyl-phenylether	ND	ug / L	1	1	03/21/01
X0199	XG.2001.343-1	59-50-7	4-Chloro-3-methylphenol	ND	ug / L	1	5	03/21/01
X0199	XG.2001.343-1	106-47-8	4-Chloroaniline	ND	ug / L	1	5	03/21/01
X0199	XG.2001.343-1	7005-72-3	4-Chlorophenyl-phenylether	ND	ug / L	1	1	03/21/01
X0199	XG.2001.343-1	100-01-6	4-Nitroaniline	ND	ug / L	1	5	03/21/01
X0199	XG.2001.343-1	100-02-7	4-Nitrophenol	ND	ug / L	1	10	03/21/01
X0199	XG.2001.343-1	83-32-9	Acenaphthene	ND	ug / L	1	1	03/21

Quality Control Summary

Explanation of codes

D *Not applicable due to sample dilution*
L *Not applicable due to MDL proximity*

Client: **CH2MHILL**
Project: **0103365** **160660.02.FF.SA**

X0199	XG.2001.343-1	208-96-8	Acenaphthylene	ND	ug / L	1	1	03/21/01
X0199	XG.2001.343-1	62-53-3	Aniline	ND	ug / L	1	10	03/21/01
X0199	XG.2001.343-1	120-12-7	Anthracene	ND	ug / L	1	1	03/21/01
X0199	XG.2001.343-1		Azobenzene&1,2-Diphenylhydrazine	ND	ug / L	1	1	03/21/01
X0199	XG.2001.343-1	56-55-3	Benzo (a) anthracene	ND	ug / L	1	1	03/21/01
X0199	XG.2001.343-1	50-32-8	Benzo(a)pyrene	ND	ug / L	1	1	03/21/01
X0199	XG.2001.343-1		Benzo(b & k)fluoranthene	ND	ug / L	1	1	03/21/01
X0199	XG.2001.343-1	191-24-2	Benzo(g,h,i)perylene	ND	ug / L	1	1	03/21/01
X0199	XG.2001.343-1	64-85-0	Benzoic acid	ND	ug / L	1	25	03/21/01
X0199	XG.2001.343-1	100-51-6	Benzyl alcohol	ND	ug / L	1	5	03/21/01
X0199	XG.2001.343-1	111-44-4	bis (2-Chloroethyl) ether	ND	ug / L	1	1	03/21/01
X0199	XG.2001.343-1	111-91-1	bis(2-Chloroethoxy)methane	ND	ug / L	1	1	03/21/01
X0199	XG.2001.343-1	108-60-1	bis(2-Chloroisopropyl)ether	ND	ug / L	1	1	03/21/01
X0199	XG.2001.343-1	117-81-7	bis(2-Ethylhexyl)phthalate	ND	ug / L	1	5	03/21/01
X0199	XG.2001.343-1	85-68-7	Butylbenzylphthalate	ND	ug / L	1	1	03/21/01
X0199	XG.2001.343-1	218-01-9	Chrysene	ND	ug / L	1	1	03/21/01
X0199	XG.2001.343-1	84-74-2	di-n-Butylphthalate	ND	ug / L	1	1	03/21/01
X0199	XG.2001.343-1	117-84-0	di-n-Octylpthalate	ND	ug / L	1	1	03/21/01
X0199	XG.2001.343-1	53-70-3	Dibenz(a,h)anthracene	ND	ug / L	1	1	03/21/01
X0199	XG.2001.343-1	132-64-9	Dibenzofuran	ND	ug / L	1	1	03/21/01
X0199	XG.2001.343-1	84-66-2	Diethylphthalate	ND	ug / L	1	1	03/21/01
X0199	XG.2001.343-1	131-11-3	Dimethylphthalate	ND	ug / L	1	1	03/21/01
[illegible]	XG.2001.343-1	206-44-0	Fluoranthene	ND	ug / L	1	1	03/21/01
[illegible]	XG.2001.343-1	86737	Fluorene	ND	ug / L	1	1	03/21/01
X0199	XG.2001.343-1	118-74-1	Hexachlorobenzene	ND	ug / L	1	10	03/21/01
X0199	XG.2001.343-1	87-68-3	Hexachlorobutadiene	ND	ug / L	1	10	03/21/01
X0199	XG.2001.343-1	77-47-4	Hexachlorocyclopentadiene	ND	ug / L	1	10	03/21/01
X0199	XG.2001.343-1	67-72-1	Hexachloroethane	ND	ug / L.	1	5	03/21/01
X0199	XG.2001.343-1	193-39-5	Indeno(1,2,3-cd)pyrene	ND	ug / L	1	1	03/21/01
X0199	XG.2001.343-1	78-59-1	Isophorone	ND	ug / L	1	1	03/21/01
X0199	XG.2001.343-1	621-64-7	n-Nitroso-di-n-propylamine	ND	ug / L	1	1	03/21/01
X0199	XG.2001.343-1	62-75-9	n-Nitroso-dimethyl-amine	ND	ug / L	1	10	03/21/01
X0199	XG.2001.343-1	86-30-6	n-Nitrosodiphenylamine	ND	ug / L	1	1	03/21/01
X0199	XG.2001.343-1	91-20-3	Naphthalene	ND	ug / L	1	1	03/21/01
X0199	XG.2001.343-1	98-95-3	Nitrobenzene	ND	ug / L	1	1	03/21/01
X0199	XG.2001.343-1	87-86-5	Pentachlorophenol	ND	ug / L	1	10	03/21/01
X0199	XG.2001.343-1	85-01-8	Phenanthrene	ND	ug / L	1	1	03/21/01
X0199	XG.2001.343-1	108-95-2	Phenol	ND	ug / L	1	10	03/21/01
X0199	XG.2001.343-1	129-00-0	Pyrene	ND	ug / L	1	1	03/21/01
X0199	XG.2001.343-1	110-86-1	Pyridine	ND	ug / L	1	10	03/21/01
X0199-020		**SW846 3510B/8270B SVOCs by GC/MS**						
X0199	XG.2001.374-1	120-82-1	1,2,4-Trichlorobenzene	ND	ug / L	1	1	03/29/01
X0199	XG.2001.374-1	95-50-1	1,2-Dichlorobenzene	ND	ug / L	1	1	03/29/01
X0199	XG.2001.374-1	541-73-1	1,3-Dichlorobenzene	ND	ug / L	1	1	03/29/01
X0199	XG.2001.374-1	106-46-7	1,4-Dichlorobenzene	ND	ug / L	1	1	03/29/01
X0199	XG.2001.374-1	90-12-0	1-Methylnaphthalene	ND	ug / L	1	1	03/29/01
X0199	XG.2001.374-1	58-90-2	2,3,4,6-Tetrachlorophenol	ND	ug / L	1	5	03/29/01
[illegible]	XG.2001.374-1	95-95-4	2,4,5-Trichlorophenol	ND	ug / L	1	5	03/29/01
[illegible]	XG.2001.374-1	88-06-2	2,4,6-Trichlorophenol	ND	ug / L	1	5	03/29/01

Quality Control Summary

Client: **CH2MHILL**

Project: **0103365** **160660.02.FF.SA**

Explanation of codes

D *Not applicable due to sample dilut*

L *Not applicable due to MDL proxim*

X0199	XG.2001.374-1	120-83-2	2,4-Dichlorophenol	ND	ug / L	1	5	03/29/0
X0199	XG.2001.374-1	105-67-9	2,4-Dimethylphenol	ND	ug / L	1	1	03/29/0
X0199	XG.2001.374-1	51-28-5	2,4-Dinitrophenol	ND	ug / L	1	10	03/29/0
X0199	XG.2001.374-1	121-14-2	2,4-Dinitrotoluene	ND	ug / L	1	5	03/29/0
X0199	XG.2001.374-1	606-20-2	2,6-Dinitrotoluene	ND	ug / L	1	5	03/29/0
X0199	XG.2001.374-1	91-58-7	2-Chloronaphthalene	ND	ug / L	1	1	03/29/0
X0199	XG.2001.374-1	95-57-8	2-Chlorophenol	ND	ug / L	1	1	03/29/0
X0199	XG.2001.374-1	91-57-6	2-Methylnaphthalene	ND	ug / L	1	1	03/29/0
X0199	XG.2001.374-1	95-48-7	2-Methylphenol	ND	ug / L	1	1	03/29/0
X0199	XG.2001.374-1	88-74-4	2-Nitroaniline	ND	ug / L	1	5	03/29/0
X0199	XG.2001.374-1	88-75-5	2-Nitrophenol	ND	ug / L	1	5	03/29/0
X0199	XG.2001.374-1		3+4 Methylphenol	ND	ug / L	1	1	03/29/0
X0199	XG.2001.374-1	91-94-1	3,3-Dichlorobenzidine	ND	ug / L	1	10	03/29/0
X0199	XG.2001.374-1	99-09-2	3-Nitroaniline	ND	ug / L	1	5	03/29/0
X0199	XG.2001.374-1	534-52-1	4,6-Dinitro-2-methylphenol	ND	ug / L	1	10	03/29/0
X0199	XG.2001.374-1	101-55-3	4-Bromophenyl-phenylether	ND	ug / L	1	1	03/29/0
X0199	XG.2001.374-1	59-50-7	4-Chloro-3-methylphenol	ND	ug / L	1	5	03/29/0
X0199	XG.2001.374-1	106-47-8	4-Chloroaniline	ND	ug / L	1	5	03/29/0
X0199	XG.2001.374-1	7005-72-3	4-Chlorophenyl-phenylether	ND	ug / L	1	1	03/29/0
X0199	XG.2001.374-1	100-01-6	4-Nitroaniline	ND	ug / L	1	5	03/29/0
X0199	XG.2001.374-1	100-02-7	4-Nitrophenol	ND	ug / L	1	10	03/29/0
X0199	XG.2001.374-1	83-32-9	Acenaphthene	ND	ug / L	1	1	03/29/0
X0199	XG.2001.374-1	208-96-8	Acenaphthylene	ND	ug / L	1	1	03/29/0
X0199	XG.2001.374-1	62-53-3	Aniline	ND	ug / L	1	10	03/29/
X0199	XG.2001.374-1	120-12-7	Anthracene	ND	ug / L	1	1	03/29/
X0199	XG.2001.374-1		Azobenzene&1,2-Diphenylhydrazine	ND	ug / L	1	1	03/29/0
X0199	XG.2001.374-1	56-55-3	Benzo (a) anthracene	ND	ug / L	1	1	03/29/0
X0199	XG.2001.374-1	50-32-8	Benzo(a)pyrene	ND	ug / L	1	1	03/29/0
X0199	XG.2001.374-1		Benzo(b & k)fluoranthene	ND	ug / L	1	1	03/29/0
X0199	XG.2001.374-1	191-24-2	Benzo(g,h,i)perylene	ND	ug / L	1	1	03/29/0
X0199	XG.2001.374-1	64-85-0	Benzoic acid	ND	ug / L	1	25	03/29/0
X0199	XG.2001.374-1	100-51-6	Benzyl alcohol	ND	ug / L	1	5	03/29/0
X0199	XG.2001.374-1	111-44-4	bis (2-Chloroethyl) ether	ND	ug / L	1	1	03/29/0
X0199	XG.2001.374-1	111-91-1	bis(2-Chloroethoxy)methane	ND	ug / L	1	1	03/29/0
X0199	XG.2001.374-1	108-60-1	bis(2-Chloroisopropyl)ether	ND	ug / L	1	1	03/29/0
X0199	XG.2001.374-1	117-81-7	bis(2-Ethylhexyl)phthalate	ND	ug / L	1	5	03/29/0
X0199	XG.2001.374-1	85-68-7	Butylbenzylphthalate	ND	ug / L	1	1	03/29/0
X0199	XG.2001.374-1	218-01-9	Chrysene	ND	ug / L	1	1	03/29/0
X0199	XG.2001.374-1	84-74-2	di-n-Butylphthalate	ND	ug / L	1	1	03/29/0
X0199	XG.2001.374-1	117-84-0	di-n-Octylpthalate	ND	ug / L	1	1	03/29/0
X0199	XG.2001.374-1	53-70-3	Dibenz(a,h)anthracene	ND	ug / L	1	1	03/29/0
X0199	XG.2001.374-1	132-64-9	Dibenzofuran	ND	ug / L	1	1	03/29/0
X0199	XG.2001.374-1	84-66-2	Diethylphthalate	ND	ug / L	1	1	03/29/0
X0199	XG.2001.374-1	131-11-3	Dimethylphthalate	ND	ug / L	1	1	03/29/0
X0199	XG.2001.374-1	206-44-0	Fluoranthene	ND	ug / L	1	1	03/29/0
X0199	XG.2001.374-1	86737	Fluorene	ND	ug / L	1	1	03/29/0
X0199	XG.2001.374-1	118-74-1	Hexachlorobenzene	ND	ug / L	1	10	03/29/0
X0199	XG.2001.374-1	87-68-3	Hexachlorobutadiene	ND	ug / L	1	10	03/29/0
X0199	XG.2001.374-1	77-47-4	Hexachlorocyclopentadiene	ND	ug / L	1	10	03/29
X0199	XG.2001.374-1	67-72-1	Hexachloroethane	ND	ug / L	1	5	03/29

Quality Control Summary

Explanation of codes

D *Not applicable due to sample dilution*
L *Not applicable due to MDL proximity*

t: CH2MHILL
Project: 0103365 160660.02.FF.SA

X0199	XG.2001.374-1	193-39-5	Indeno(1,2,3-cd)pyrene	ND	ug / L	1	1	03/29/01
X0199	XG.2001.374-1	78-59-1	Isophorone	ND	ug / L	1	1	03/29/01
X0199	XG.2001.374-1	621-64-7	n-Nitroso-di-n-propylamine	ND	ug / L	1	1	03/29/01
X0199	XG.2001.374-1	62-75-9	n-Nitroso-dimethyl-amine	ND	ug / L	1	10	03/29/01
X0199	XG.2001.374-1	86-30-6	n-Nitrosodiphenylamine	ND	ug / L	1	1	03/29/01
X0199	XG.2001.374-1	91-20-3	Naphthalene	ND	ug / L	1	1	03/29/01
X0199	XG.2001.374-1	98-95-3	Nitrobenzene	ND	ug / L	1	1	03/29/01
X0199	XG.2001.374-1	87-86-5	Pentachlorophenol	ND	ug / L	1	10	03/29/01
X0199	XG.2001.374-1	85-01-8	Phenanthrene	ND	ug / L	1	1	03/29/01
X0199	XG.2001.374-1	108-95-2	Phenol	ND	ug / L	1	10	03/29/01
X0199	XG.2001.374-1	129-00-0	Pyrene	ND	ug / L	1	1	03/29/01
X0199	XG.2001.374-1	110-86-1	Pyridine	ND	ug / L	1	10	03/29/01

QC Type **MS: Matrix Spike** QC Matrix **WATER**

QC Group	Run Sequence	CAS #	Analyte	Result	Units	Dilution Factor	Detection Limit	Code	Run Date
X01108-010		**SW846 8260A Purgeable VOCs by GC/MS**							
X01108	XG.2001.371-6	75-34-3	1,1 Dichloroethene	110	% Recovery	1	NA		03/30/01
X01108	XG.2001.371-6	106-46-7	1,4 Dichlorobenzene	102	% Recovery	1	NA		03/30/01
X01108	XG.2001.371-6	71-43-2	Benzene	112	% Recovery	1	NA		03/30/01
[illegible]8	XG.2001.371-6	108-90-7	Chlorobenzene	106	% Recovery	1	NA		03/30/01
X01108	XG.2001.371-6	108-88-3	Toluene	111	% Recovery	1	NA		03/30/01
X01108	XG.2001.371-6	79-01-6	Trichloroethene	107	% Recovery	1	NA		03/30/01
X01117-011		**SW846 5030A/8015A GRO by GC/FID**							
X01117	XG.2001.400-5		Gasoline Range Organics	133	% Recovery	1	NA		04/06/01
X01119-005		**SW846 ME/8015A Diesel Range Organics by GC/FID**							
X01119	XG.2001.393-9		Diesel Range Organics	98	% Recovery	1	NA		04/05/01
X0199-005		**SW846 3510B/8270B SVOCs by GC/MS**							
X0199	XG.2001.343-6	120-82-1	1,2,4-Trichlorobenzene	72	% Recovery	1	NA		03/21/01
X0199	XG.2001.343-6	106-46-7	1,4-Dichlorobenzene	77	% Recovery	1	NA		03/21/01
X0199	XG.2001.343-6	121-14-2	2,4-Dinitrotoluene	88	% Recovery	1	NA		03/21/01
X0199	XG.2001.343-6	95-57-8	2-Chlorophenol	75	% Recovery	1	NA		03/21/01
X0199	XG.2001.343-6	59-50-7	4-Chloro-3-methylphenol	74	% Recovery	1	NA		03/21/01
X0199	XG.2001.343-6	100-02-7	4-Nitrophenol	< 1	% Recovery	1	NA		03/21/01
X0199	XG.2001.343-6	83-32-9	Acenaphthene	83	% Recovery	1	NA		03/21/01
X0199	XG.2001.343-6	117-84-0	di-n-Octylpthalate	78	% Recovery	1	NA		03/21/01
X0199	XG.2001.343-6	621-64-7	n-Nitroso-di-n-propylamine	96	% Recovery	1	NA		03/21/01
X0199	XG.2001.343-6	87-86-5	Pentachlorophenol	60	% Recovery	1	NA		03/21/01
X0199	XG.2001.343-6	108-95-2	Phenol	38	% Recovery	1	NA		03/21/01
X0199	XG.2001.343-6	129-00-0	Pyrene	62	% Recovery	1	NA		03/21/01
X0199-007		**SW846 3510B/8270B SVOCs by GC/MS**							
X0199	XG.2001.343-7	120-82-1	1,2,4-Trichlorobenzene	67	% Recovery	1	NA		03/21/01
X0199	XG.2001.343-7	106-46-7	1,4-Dichlorobenzene	69	% Recovery	1	NA		03/21/01
[illegible]199	XG.2001.343-7	121-14-2	2,4-Dinitrotoluene	85	% Recovery	1	NA		03/21/01
[illegible]9	XG.2001.343-7	95-57-8	2-Chlorophenol	72	% Recovery	1	NA		03/21/01
X0199	XG.2001.343-7	59-50-7	4-Chloro-3-methylphenol	76	% Recovery	1	NA		03/21/01

Quality Control Summary

Client: **CH2MHILL**

Project: **0103365** **160660.02.FF.SA**

Explanation of codes

D *Not applicable due to sample diluti*

L *Not applicable due to MDL proximi*

X0199	XG.2001.343-7	100-02-7	4-Nitrophenol	44	% Recovery	1	NA	03/21/0
X0199	XG.2001.343-7	83-32-9	Acenaphthene	77	% Recovery	1	NA	03/21/0
X0199	XG.2001.343-7	117-84-0	di-n-Octylpthalate	79	% Recovery	1	NA	03/21/0
X0199	XG.2001.343-7	621-64-7	n-Nitroso-di-n-propylamine	89	% Recovery	1	NA	03/21/0
X0199	XG.2001.343-7	87-86-5	Pentachlorophenol	56	% Recovery	1	NA	03/21/0
X0199	XG.2001.343-7	108-95-2	Phenol	37	% Recovery	1	NA	03/21/0
X0199	XG.2001.343-7	129-00-0	Pyrene	55	% Recovery	1	NA	03/21/0

QC Type **MSD: Matrix Spike Duplicate Accuracy** QC Matrix **WATER**

QC Group	Run Sequence	CAS #	Analyte	Result	Units	Dilution Factor	Detection Limit	Code	Run Date
X01108-011		**SW846 8260A Purgeable VOCs by GC/MS**							
X01108	XG.2001.371-7	75-34-3	1,1 Dichloroethene	112	% Recovery	1	NA		03/30/0
X01108	XG.2001.371-7	106-46-7	1,4 Dichlorobenzene	106	% Recovery	1	NA		03/30/0
X01108	XG.2001.371-7	71-43-2	Benzene	116	% Recovery	1	NA		03/30/0
X01108	XG.2001.371-7	108-90-7	Chlorobenzene	111	% Recovery	1	NA		03/30/0
X01108	XG.2001.371-7	108-88-3	Toluene	113	% Recovery	1	NA		03/30/0
X01108	XG.2001.371-7	79-01-6	Trichloroethene	111	% Recovery	1	NA		03/30/0
X01117-012		**SW846 5030A/8015A GRO by GC/FID**							
X01117	XG.2001.400-6		Gasoline Range Organics	135	% Recovery	1	NA		04/06/0
X01119-006		**SW846 ME/8015A Diesel Range Organics by GC/FID**							
X01119	XG.2001.393-10		Diesel Range Organics	95	% Recovery	1	NA		04/05/0

QC Type **MSD: Matrix Spike Duplicate Precision** QC Matrix **WATER**

QC Group	Run Sequence	CAS #	Analyte	Result	Units	Dilution Factor	Detection Limit	Code	Run Date
X01108-011		**SW846 8260A Purgeable VOCs by GC/MS**							
X01108	XG.2001.371-7	75-34-3	1,1 Dichloroethene	2	RPD	1	NA		03/30/01
X01108	XG.2001.371-7	106-46-7	1,4 Dichlorobenzene	4	RPD	1	NA		03/30/01
X01108	XG.2001.371-7	71-43-2	Benzene	3	RPD	1	NA		03/30/0
X01108	XG.2001.371-7	108-90-7	Chlorobenzene	4	RPD	1	NA		03/30/0
X01108	XG.2001.371-7	108-88-3	Toluene	2	RPD	1	NA		03/30/0
X01108	XG.2001.371-7	79-01-6	Trichloroethene	4	RPD	1	NA		03/30/0
X01117-012		**SW846 5030A/8015A GRO by GC/FID**							
X01117	XG.2001.400-6		Gasoline Range Organics	1	RPD	1	NA		04/06/01
X01119-006		**SW846 ME/8015A Diesel Range Organics by GC/FID**							
X01119	XG.2001.393-10		Diesel Range Organics	3	RPD	1	NA		04/05/01

Surrogate Summary: QC

Client: CH2MHILL
Project: 0103365 160660.02.FF.SA

QC Type: **LCS** QC Matrix: **SOLID**

QC Group	Run Sequence	CAS #	Analyte	Result	Units	Dilution Factor	Detection Limit	Code	Run Date
X01105-007		**8260**							
X01105	XG.2001.376-7	NA	1,2 Dichloroethane-D4 (SS)	83	% Recovery	1	NA		03/29/01
X01105	XG.2001.376-7	NA	4-Bromofluorobenzene (SS)	95	% Recovery	1	NA		03/29/01
X01105	XG.2001.376-7	NA	Dibromofluoromethane (SS)	98	% Recovery	1	NA		03/29/01
X01105	XG.2001.376-7	NA	Toluene-D8 (SS)	101	% Recovery	1	NA		03/29/01
X0194-002		**GRO**							
X0194	XG.2001.325-2	NA	4-Bromofluorobenzene-FID	103	% Recovery	1	NA		03/16/01
X0194	XG.2001.325-2	NA	4-Bromofluorobenzene-PID	ND	% Recovery	1	NA		03/16/01
X0194	XG.2001.325-2	NA	aaa-Trifluorotoluene-FID	103	% Recovery	1	NA		03/16/01
X0194	XG.2001.325-2	NA	aaa-Trifluorotoluene-PID	4180	% Recovery	1	NA		03/16/01
X0198-002		**DRO**							
X0198	XG.2001.334-2	NA	O-terphenyl	105	% Recovery	1	NA		03/20/01

QC Type: **LCSD** QC Matrix: **SOLID**

QC Group	Run Sequence	CAS #	Analyte	Result	Units	Dilution Factor	Detection Limit	Code	Run Date
X01105-008		**8260**							
X01105	XG.2001.376-8	NA	1,2 Dichloroethane-D4 (SS)	92	% Recovery	1	NA		03/29/01
X01105	XG.2001.376-8	NA	4-Bromofluorobenzene (SS)	96	% Recovery	1	NA		03/29/01
X01105	XG.2001.376-8	NA	Dibromofluoromethane (SS)	102	% Recovery	1	NA		03/29/01
X01105	XG.2001.376-8	NA	Toluene-D8 (SS)	103	% Recovery	1	NA		03/29/01
X0194-003		**GRO**							
X0194	XG.2001.325-3	NA	4-Bromofluorobenzene-FID	103	% Recovery	1	NA		03/16/01
X0194	XG.2001.325-3	NA	4-Bromofluorobenzene-PID	ND	% Recovery	1	NA		03/16/01
X0194	XG.2001.325-3	NA	aaa-Trifluorotoluene-FID	104	% Recovery	1	NA		03/16/01
X0194	XG.2001.325-3	NA	aaa-Trifluorotoluene-PID	521	% Recovery	1	NA		03/16/01
X0198-003		**DRO**							
X0198	XG.2001.334-3	NA	O-terphenyl	110	% Recovery	1	NA		03/20/01

QC Type: **MB** QC Matrix: **SOLID**

QC Group	Run Sequence	CAS #	Analyte	Result	Units	Dilution Factor	Detection Limit	Code	Run Date
X01105-001		**8260**							
X01105	XG.2001.376-1	NA	1,2 Dichloroethane-D4 (SS)	91	% Recovery	1	NA		03/29/01
[illegible]5	XG.2001.376-1	NA	4-Bromofluorobenzene (SS)	97	% Recovery	1	NA		03/29/01
[illegible]5	XG.2001.376-1	NA	Dibromofluoromethane (SS)	99	% Recovery	1	NA		03/29/01

Surrogate Summary: QC

Client: **CH2MHILL**

Project: **0103365** **160660.02.FF.SA**

X01105	XG.2001.376-1	NA	Toluene-D8 (SS)	101	% Recovery	1	NA	03/28/0
X01105-009		**8260**						
X01105	XG.2001.376-9	NA	1,2 Dichloroethane-D4 (SS)	100	% Recovery	1	NA	03/29/0
X01105	XG.2001.376-9	NA	4-Bromofluorobenzene (SS)	99	% Recovery	1	NA	03/29/0
X01105	XG.2001.376-9	NA	Dibromofluoromethane (SS)	102	% Recovery	1	NA	03/29/0
X01105	XG.2001.376-9	NA	Toluene-D8 (SS)	103	% Recovery	1	NA	03/29/0
X01105-018		**8260**						
X01105	XG.2001.376-16	NA	1,2 Dichloroethane-D4 (SS)	103	% Recovery	1	NA	03/30/0
X01105	XG.2001.376-16	NA	4-Bromofluorobenzene (SS)	100	% Recovery	1	NA	03/30/0
X01105	XG.2001.376-16	NA	Dibromofluoromethane (SS)	102	% Recovery	1	NA	03/30/0
X01105	XG.2001.376-16	NA	Toluene-D8 (SS)	102	% Recovery	1	NA	03/30/0
X01105-022		**8260**						
X01105	XG.2001.384-1	NA	1,2 Dichloroethane-D4 (SS)	102	% Recovery	1	NA	04/03/0
X01105	XG.2001.384-1	NA	4-Bromofluorobenzene (SS)	98	% Recovery	1	NA	04/03/0
X01105	XG.2001.384-1	NA	Dibromofluoromethane (SS)	102	% Recovery	1	NA	04/03/0
X01105	XG.2001.384-1	NA	Toluene-D8 (SS)	102	% Recovery	1	NA	04/03/0
X01105-037		**8260**						
X01105	XG.2001.388-1	NA	1,2 Dichloroethane-D4 (SS)	105	% Recovery	1	NA	04/04/0
X01105	XG.2001.388-1	NA	4-Bromofluorobenzene (SS)	98	% Recovery	1	NA	04/04/0
X01105	XG.2001.388-1	NA	Dibromofluoromethane (SS)	103	% Recovery	1	NA	04/04/0
X01105	XG.2001.388-1	NA	Toluene-D8 (SS)	103	% Recovery	1	NA	04/04/0
X0194-001		**GRO**						
X0194	XG.2001.325-1	NA	4-Bromofluorobenzene-FID	89	% Recovery	1	NA	03/16/0
X0194	XG.2001.325-1	NA	4-Bromofluorobenzene-PID	ND	% Recovery	1	NA	03/16/0
X0194	XG.2001.325-1	NA	aaa-Trifluorotoluene-FID	100	% Recovery	1	NA	03/16/0
X0194	XG.2001.325-1	NA	aaa-Trifluorotoluene-PID	ND	% Recovery	1	NA	03/16/0
X0194-007		**GRO**						
X0194	XG.2001.328-1	NA	4-Bromofluorobenzene-FID	86	% Recovery	1	NA	03/20/01
X0194	XG.2001.328-1	NA	4-Bromofluorobenzene-PID	176	% Recovery	1	NA	03/20/01
X0194	XG.2001.328-1	NA	aaa-Trifluorotoluene-FID	99	% Recovery	1	NA	03/20/01
X0194	XG.2001.328-1	NA	aaa-Trifluorotoluene-PID	35	% Recovery	1	NA	03/20/01
X0194-010		**GRO**						
X0194	XG.2001.337-1	NA	4-Bromofluorobenzene-FID	89	% Recovery	1	NA	03/21/01
X0194	XG.2001.337-1	NA	4-Bromofluorobenzene-PID	ND	% Recovery	1	NA	03/21/01
X0194	XG.2001.337-1	NA	aaa-Trifluorotoluene-FID	99	% Recovery	1	NA	03/21/01
X0194	XG.2001.337-1	NA	aaa-Trifluorotoluene-PID	63	% Recovery	1	NA	03/21/01
X0194-014		**GRO**						
X0194	XG.2001.364-1	NA	4-Bromofluorobenzene-FID	87	% Recovery	1	NA	03/27/01
X0194	XG.2001.364-1	NA	4-Bromofluorobenzene-PID	152	% Recovery	1	NA	03/27/01
X0194	XG.2001.364-1	NA	aaa-Trifluorotoluene-FID	98	% Recovery	1	NA	03/27/01
X0194	XG.2001.364-1	NA	aaa-Trifluorotoluene-PID	181	% Recovery	1	NA	03/27/01
X0194-019		**GRO**						
X0194	XG.2001.364-6	NA	4-Bromofluorobenzene-FID	88	% Recovery	1	NA	03/28/01
X0194	XG.2001.364-6	NA	4-Bromofluorobenzene-PID	360	% Recovery	1	NA	03/28/01
X0194	XG.2001.364-6	NA	aaa-Trifluorotoluene-FID	99	% Recovery	1	NA	03/28/
X0194	XG.2001.364-6	NA	aaa-Trifluorotoluene-PID	94	% Recovery	1	NA	03/28

Surrogate Summary: QC

Client: **CH2MHILL**

Project: **0103365** **160660.02.FF.SA**

X0194-025		GRO							
X0194	XG.2001.394-1	NA	4-Bromofluorobenzene-FID	106	% Recovery	1	NA		04/05 01
X0194	XG.2001.394-1	NA	4-Bromofluorobenzene-PID	ND	% Recovery	1	NA		04/05 01
X0194	XG.2001.394-1	NA	aaa-Trifluorotoluene-FID	113	% Recovery	1	NA		04/05 01
X0194	XG.2001.394-1	NA	aaa-Trifluorotoluene-PID	42	% Recovery	1	NA		04/05 01
X0198-001		DRO							
X0198	XG.2001.334-1	NA	O-terphenyl	91	% Recovery	1	NA		03/20 01
X0198-008		DRO							
X0198	XG.2001.338-1	NA	O-terphenyl	85	% Recovery	1	NA		03/21 01
X0198-012		DRO							
X0198	XG.2001.361-1	NA	O-terphenyl	91	% Recovery	1	NA		03/27 01
X0198-017		DRO							
X0198	XG.2001.393-1	NA	O-terphenyl	95	% Recovery	1	NA		04/05 01

QC Type **MS** QC Matrix **SOLID**

QC Group	Run Sequence	CAS #	Analyte	Result	Units	Dilution Factor	Detection Limit	Code	Run Date
X01105-016		8260							
[illegible]	XG.2001.376-15	NA	1,2 Dichloroethane-D4 (SS)	86	% Recovery	1	NA		03/29 01
X01105	XG.2001.376-15	NA	4-Bromofluorobenzene (SS)	97	% Recovery	1	NA		03/29 01
X01105	XG.2001.376-15	NA	Dibromofluoromethane (SS)	94	% Recovery	1	NA		03/29 01
X01105	XG.2001.376-15	NA	Toluene-D8 (SS)	102	% Recovery	1	NA		03/29 01
X0194-005		GRO							
X0194	XG.2001.325-5	NA	4-Bromofluorobenzene-FID	102	% Recovery	1	NA		03/16 01
X0194	XG.2001.325-5	NA	4-Bromofluorobenzene-PID	82	% Recovery	1	NA		03/16 01
X0194	XG.2001.325-5	NA	aaa-Trifluorotoluene-FID	105	% Recovery	1	NA		03/16 01
X0194	XG.2001.325-5	NA	aaa-Trifluorotoluene-PID	590	% Recovery	1	NA		03/16 01
X0198-005		DRO							
X0198	XG.2001.334-5	NA	O-terphenyl	104	% Recovery	1	NA		03/20 01

QC Type **MSD** QC Matrix **SOLID**

QC Group	Run Sequence	CAS #	Analyte	Result	Units	Dilution Factor	Detection Limit	Code	Run Date
X01105-020		8260							
X01105	XG.2001.376-18	NA	1,2 Dichloroethane-D4 (SS)	88	% Recovery	1	NA		03/30 01
X01105	XG.2001.376-18	NA	4-Bromofluorobenzene (SS)	98	% Recovery	1	NA		03/30 01
X01105	XG.2001.376-18	NA	Dibromofluoromethane (SS)	96	% Recovery	1	NA		03/30 01
X01105	XG.2001.376-18	NA	Toluene-D8 (SS)	102	% Recovery	1	NA		03/30 01
X0194-006		GRO							
[illegible]	XG.2001.325-6	NA	4-Bromofluorobenzene-FID	103	% Recovery	1	NA		03/16 01
X0194	XG.2001.325-6	NA	4-Bromofluorobenzene-PID	99	% Recovery	1	NA		03/16 01

Surrogate Summary: QC

Client: CH2MHILL

Project: 0103365 160660.02.FF.SA

X0194	XG.2001.325-6	NA	aaa-Trifluorotoluene-FID	105	% Recovery	1	NA		03/16/01
X0194	XG.2001.325-6	NA	aaa-Trifluorotoluene-PID	219	% Recovery	1	NA		03/16/01
X0198-006		DRO							
X0198	XG.2001.334-6	NA	O-terphenyl	103	% Recovery	1	NA		03/20/01

QC Type **LCS** QC Matrix **WATER**

QC Group	Run Sequence	CAS #	Analyte	Result	Units	Dilution Factor	Detection Limit	Code	Run Date
X01108-008		8260							
X01108	XG.2001.371-4	NA	1,2 Dichloroethane-D4 (SS)	104	% Recovery	1	NA		03/30/01
X01108	XG.2001.371-4	NA	4-Bromofluorobenzene (SS)	101	% Recovery	1	NA		03/30/01
X01108	XG.2001.371-4	NA	Dibromofluoromethane (SS)	105	% Recovery	1	NA		03/30/01
X01108	XG.2001.371-4	NA	Toluene-D8 (SS)	104	% Recovery	1	NA		03/30/01
X01117-008		GRO							
X01117	XG.2001.400-2	NA	4-Bromofluorobenzene-FID	120	% Recovery	1	NA		04/06/01
X01117	XG.2001.400-2	NA	4-Bromofluorobenzene-PID	ND	% Recovery	1	NA		04/06/01
X01117	XG.2001.400-2	NA	aaa-Trifluorotoluene-FID	122	% Recovery	1	NA		04/06/01
X01117	XG.2001.400-2	NA	aaa-Trifluorotoluene-PID	ND	% Recovery	1	NA		04/06/01
X01119-002		DRO							
X01119	XG.2001.393-6	NA	O-terphenyl	109	% Recovery	1	NA		04/05/
X0199-002		8270							
X0199	XG.2001.343-2	NA	*2,4,6-TRIBROMOPHENOL	85	% Recovery	1	NA		03/21/01
X0199	XG.2001.343-2	NA	*2-FLUOROBIPHENYL	89	% Recovery	1	NA		03/21/01
X0199	XG.2001.343-2	NA	*2-FLUOROPHENOL	43	% Recovery	1	NA		03/21/01
X0199	XG.2001.343-2	NA	*NITROBENZENE-D5	84	% Recovery	1	NA		03/21/01
X0199	XG.2001.343-2	NA	*PHENOL-D6	32	% Recovery	1	NA		03/21/01
X0199	XG.2001.343-2	NA	*TERPHENYL-D14	86	% Recovery	1	NA		03/21/01

QC Type **LCSD** QC Matrix **WATER**

QC Group	Run Sequence	CAS #	Analyte	Result	Units	Dilution Factor	Detection Limit	Code	Run Date
X01108-009		8260							
X01108	XG.2001.371-5	NA	1,2 Dichloroethane-D4 (SS)	110	% Recovery	1	NA		03/30/0
X01108	XG.2001.371-5	NA	4-Bromofluorobenzene (SS)	102	% Recovery	1	NA		03/30/0
X01108	XG.2001.371-5	NA	Dibromofluoromethane (SS)	107	% Recovery	1	NA		03/30/0
X01108	XG.2001.371-5	NA	Toluene-D8 (SS)	105	% Recovery	1	NA		03/30/0
X01117-009		GRO							
X01117	XG.2001.400-3	NA	4-Bromofluorobenzene-FID	119	% Recovery	1	NA		04/06/0
X01117	XG.2001.400-3	NA	4-Bromofluorobenzene-PID	ND	% Recovery	1	NA		04/06/0
X01117	XG.2001.400-3	NA	aaa-Trifluorotoluene-FID	121	% Recovery	1	NA		04/06/0
X01117	XG.2001.400-3	NA	aaa-Trifluorotoluene-PID	ND	% Recovery	1	NA		04/06/0

Surrogate Summary: QC

Client: CH2MHILL

Project: 0103365 160660.02.FF.SA

X01119-003		**DRO**							
X01119	XG.2001.393-7	NA	O-terphenyl	113	% Recovery	1	NA		04/05/01
X0199-003		**8270**							
X0199	XG.2001.343-3	NA	*2,4,6-TRIBROMOPHENOL	88	% Recovery	1	NA		03/21/01
X0199	XG.2001.343-3	NA	*2-FLUOROBIPHENYL	91	% Recovery	1	NA		03/21/01
X0199	XG.2001.343-3	NA	*2-FLUOROPHENOL	50	% Recovery	1	NA		03/21/01
X0199	XG.2001.343-3	NA	*NITROBENZENE-D5	88	% Recovery	1	NA		03/21/01
X0199	XG.2001.343-3	NA	*PHENOL-D6	36	% Recovery	1	NA		03/21/01
X0199	XG.2001.343-3	NA	*TERPHENYL-D14	93	% Recovery	1	NA		03/21/01

QC Type **MB** QC Matrix **WATER**

QC Group	Run Sequence	CAS #	Analyte	Result	Units	Dilution Factor	Detection Limit	Code	Run Date
X01108-001		**8260**							
X01108	XG.2001.371-1	NA	1,2 Dichloroethane-D4 (SS)	93	% Recovery	1	NA		03/30/01
X01108	XG.2001.371-1	NA	4-Bromofluorobenzene (SS)	99	% Recovery	1	NA		03/30/01
X01108	XG.2001.371-1	NA	Dibromofluoromethane (SS)	100	% Recovery	1	NA		03/30/01
X01108	XG.2001.371-1	NA	Toluene-D8 (SS)	101	% Recovery	1	NA		03/30/01
X01117-007		**GRO**							
[illegible]7	XG.2001.400-1	NA	4-Bromofluorobenzene-FID	106	% Recovery	1	NA		04/06/01
X01117	XG.2001.400-1	NA	4-Bromofluorobenzene-PID	ND	% Recovery	1	NA		04/06/01
X01117	XG.2001.400-1	NA	aaa-Trifluorotoluene-FID	116	% Recovery	1	NA		04/06/01
X01117	XG.2001.400-1	NA	aaa-Trifluorotoluene-PID	ND	% Recovery	1	NA		04/06/01
X01119-001		**DRO**							
X01119	XG.2001.393-5	NA	O-terphenyl	97	% Recovery	1	NA		04/05/01
X0199-001		**8270**							
X0199	XG.2001.343-1	NA	*2,4,6-TRIBROMOPHENOL	83	% Recovery	1	NA		03/21/01
X0199	XG.2001.343-1	NA	*2-FLUOROBIPHENYL	88	% Recovery	1	NA		03/21/01
X0199	XG.2001.343-1	NA	*2-FLUOROPHENOL	47	% Recovery	1	NA		03/21/01
X0199	XG.2001.343-1	NA	*NITROBENZENE-D5	86	% Recovery	1	NA		03/21/01
X0199	XG.2001.343-1	NA	*PHENOL-D6	34	% Recovery	1	NA		03/21/01
X0199	XG.2001.343-1	NA	*TERPHENYL-D14	89	% Recovery	1	NA		03/21/01
X0199-020		**8270**							
X0199	XG.2001.374-1	NA	*2,4,6-TRIBROMOPHENOL	83	% Recovery	1	NA		03/29/01
X0199	XG.2001.374-1	NA	*2-FLUOROBIPHENYL	94	% Recovery	1	NA		03/29/01
X0199	XG.2001.374-1	NA	*2-FLUOROPHENOL	51	% Recovery	1	NA		03/29/01
X0199	XG.2001.374-1	NA	*NITROBENZENE-D5	89	% Recovery	1	NA		03/29/01
X0199	XG.2001.374-1	NA	*PHENOL-D6	37	% Recovery	1	NA		03/29/01
X0199	XG.2001.374-1	NA	*TERPHENYL-D14	97	% Recovery	1	NA		03/29/01

Surrogate Summary: QC

Client: **CH2MHILL**

Project: **0103365** **160660.02.FF.SA**

QC Type **MS** QC Matrix **WATER**

QC Group	Run Sequence	CAS #	Analyte	Result	Units	Dilution Factor	Detection Limit	Code	Run Date
X01108-010		8260							
X01108	XG.2001.371-6	NA	1,2 Dichloroethane-D4 (SS)	104	% Recovery	1	NA		03/30/01
X01108	XG.2001.371-6	NA	4-Bromofluorobenzene (SS)	99	% Recovery	1	NA		03/30/01
X01108	XG.2001.371-6	NA	Dibromofluoromethane (SS)	105	% Recovery	1	NA		03/30/01
X01108	XG.2001.371-6	NA	Toluene-D8 (SS)	104	% Recovery	1	NA		03/30/01
X01117-011		GRO							
X01117	XG.2001.400-5	NA	4-Bromofluorobenzene-FID	120	% Recovery	1	NA		04/06/01
X01117	XG.2001.400-5	NA	4-Bromofluorobenzene-PID	1540	% Recovery	1	NA		04/06/01
X01117	XG.2001.400-5	NA	aaa-Trifluorotoluene-FID	117	% Recovery	1	NA		04/06/01
X01117	XG.2001.400-5	NA	aaa-Trifluorotoluene-PID	1390	% Recovery	1	NA		04/06/01
X01119-005		DRO							
X01119	XG.2001.393-9	NA	O-terphenyl	118	% Recovery	1	NA		04/05/01
X0199-005		8270							
X0199	XG.2001.343-6	NA	*2,4,6-TRIBROMOPHENOL	70	% Recovery	1	NA		03/21/01
X0199	XG.2001.343-6	NA	*2-FLUOROBIPHENYL	90	% Recovery	1	NA		03/21/01
X0199	XG.2001.343-6	NA	*2-FLUOROPHENOL	49	% Recovery	1	NA		03/21/[illegible]
X0199	XG.2001.343-6	NA	*NITROBENZENE-D5	92	% Recovery	1	NA		03/21/[illegible]
X0199	XG.2001.343-6	NA	*PHENOL-D6	36	% Recovery	1	NA		03/21/01
X0199	XG.2001.343-6	NA	*TERPHENYL-D14	47	% Recovery	1	NA		03/21/01
X0199-007		8270							
X0199	XG.2001.343-7	NA	*2,4,6-TRIBROMOPHENOL	68	% Recovery	1	NA		03/21/01
X0199	XG.2001.343-7	NA	*2-FLUOROBIPHENYL	81	% Recovery	1	NA		03/21/01
X0199	XG.2001.343-7	NA	*2-FLUOROPHENOL	46	% Recovery	1	NA		03/21/01
X0199	XG.2001.343-7	NA	*NITROBENZENE-D5	86	% Recovery	1	NA		03/21/01
X0199	XG.2001.343-7	NA	*PHENOL-D6	35	% Recovery	1	NA		03/21/01
X0199	XG.2001.343-7	NA	*TERPHENYL-D14	34	% Recovery	1	NA		03/21/01

QC Type **MSD** QC Matrix **WATER**

QC Group	Run Sequence	CAS #	Analyte	Result	Units	Dilution Factor	Detection Limit	Code	Run Date
X01108-011		8260							
X01108	XG.2001.371-7	NA	1,2 Dichloroethane-D4 (SS)	104	% Recovery	1	NA		03/30/01
X01108	XG.2001.371-7	NA	4-Bromofluorobenzene (SS)	101	% Recovery	1	NA		03/30/01
X01108	XG.2001.371-7	NA	Dibromofluoromethane (SS)	105	% Recovery	1	NA		03/30/01
X01108	XG.2001.371-7	NA	Toluene-D8 (SS)	104	% Recovery	1	NA		03/30/01
X01117-012		GRO							
X01117	XG.2001.400-6	NA	4-Bromofluorobenzene-FID	121	% Recovery	1	NA		04/06/01
X01117	XG.2001.400-6	NA	4-Bromofluorobenzene-PID	1420	% Recovery	1	NA		04/06/[illegible]
X01117	XG.2001.400-6	NA	aaa-Trifluorotoluene-FID	121	% Recovery	1	NA		04/06/[illegible]

Surrogate Summary: QC

Client: **CH2MHILL**

Project: **0103365** **160660.02.FF.SA**

X01117	XG.2001.400-6	NA	aaa-Trifluorotoluene-PID	869	% Recovery	1	NA	04/06/01
X01119-006		**DRO**						
X01119	XG.2001.393-10	NA	O-terphenyl	112	% Recovery	1	NA	04/05/01

Surrogate Summary: Fraction

Client: **CH2MHILL**

Project: **0103365** **160660.02.FF.SA**

Client Sample ID **ST106 SB34 110'** Sample Matrix **SOIL**

QC Group	Run Sequence	CAS #	Analyte	Result	Units	Dilution Factor	Detection Limit	Code	Run Date
0103365-01A		GRO							X0194-015
X0194	XG.2001.364-2	NA	4-Bromofluorobenzene-FID	96	% Recovery	1	NA		03/27/01
X0194	XG.2001.364-2	NA	4-Bromofluorobenzene-PID	72	% Recovery	1	NA		03/27/01
X0194	XG.2001.364-2	NA	aaa-Trifluorotoluene-FID	101	% Recovery	1	NA		03/27/01
X0194	XG.2001.364-2	NA	aaa-Trifluorotoluene-PID	12	% Recovery	1	NA		03/27/01
0103365-01B		DRO							X0198-013
X0198	XG.2001.361-2	NA	O-terphenyl	91	% Recovery	1	NA		03/27/01

Client Sample ID **ST106 SB34 130'** Sample Matrix **SOIL**

QC Group	Run Sequence	CAS #	Analyte	Result	Units	Dilution Factor	Detection Limit	Code	Run Date
0103365-02A		GRO							X0194-016
X0194	XG.2001.364-3	NA	4-Bromofluorobenzene-FID	93	% Recovery	1	NA		03/27/0
X0194	XG.2001.364-3	NA	4-Bromofluorobenzene-PID	ND	% Recovery	1	NA		03/27
X0194	XG.2001.364-3	NA	aaa-Trifluorotoluene-FID	97	% Recovery	1	NA		03/27
X0194	XG.2001.364-3	NA	aaa-Trifluorotoluene-PID	ND	% Recovery	1	NA		03/27/0
0103365-02B		DRO							X0198-014
X0198	XG.2001.361-3	NA	O-terphenyl	92	% Recovery	1	NA		03/27/0
0103365-02C		8260							X01105-004
X01105	XG.2001.376-4	NA	1,2 Dichloroethane-D4 (SS)	102	% Recovery	1	NA		03/29/0
X01105	XG.2001.376-4	NA	4-Bromofluorobenzene (SS)	99	% Recovery	1	NA		03/29/0
X01105	XG.2001.376-4	NA	Dibromofluoromethane (SS)	94	% Recovery	1	NA		03/29/0
X01105	XG.2001.376-4	NA	Toluene-D8 (SS)	103	% Recovery	1	NA		03/29/0

Client Sample ID **ST106 SB34 140'** Sample Matrix **SOIL**

QC Group	Run Sequence	CAS #	Analyte	Result	Units	Dilution Factor	Detection Limit	Code	Run Date
0103365-03A		GRO							X0194-017
X0194	XG.2001.364-4	NA	4-Bromofluorobenzene-FID	97	% Recovery	1	NA		03/27/0
X0194	XG.2001.364-4	NA	4-Bromofluorobenzene-PID	230	% Recovery	1	NA		03/27/0
X0194	XG.2001.364-4	NA	aaa-Trifluorotoluene-FID	101	% Recovery	1	NA		03/27/0
X0194	XG.2001.364-4	NA	aaa-Trifluorotoluene-PID	ND	% Recovery	1	NA		03/27/0
0103365-03B		DRO							X0198-015
X0198	XG.2001.361-4	NA	O-terphenyl	93	% Recovery	1	NA		03/27/0

Surrogate Summary: Fraction

Client: CH2MHILL
Project: 0103365 160660.02.FF.SA

Client Sample ID: **ST106 SB34 150'** Sample Matrix: **SOIL**

QC Group	Run Sequence	CAS #	Analyte	Result	Units	Dilution Factor	Detection Limit	Code	Run Date
0103365-04A		GRO							X0194-020
X0194	XG.2001.364-7	NA	4-Bromofluorobenzene-FID	109	% Recovery	1	NA		03/28/01
X0194	XG.2001.364-7	NA	4-Bromofluorobenzene-PID	606	% Recovery	1	NA		03/28/01
X0194	XG.2001.364-7	NA	aaa-Trifluorotoluene-FID	119	% Recovery	1	NA		03/28/01
X0194	XG.2001.364-7	NA	aaa-Trifluorotoluene-PID	109	% Recovery	1	NA		03/28/01
0103365-04B		DRO							X0198-016
X0198	XG.2001.361-5	NA	O-terphenyl	94	% Recovery	1	NA		03/27/01

Client Sample ID: **EQUIP BLANK** Sample Matrix: **H2O**

QC Group	Run Sequence	CAS #	Analyte	Result	Units	Dilution Factor	Detection Limit	Code	Run Date
0103365-05A		GRO							X01117-010
X01117	XG.2001.400-4	NA	4-Bromofluorobenzene-FID	111	% Recovery	1	NA		04/06/01
[illegible]	XG.2001.400-4	NA	4-Bromofluorobenzene-PID	ND	% Recovery	1	NA		04/06/01
X01117	XG.2001.400-4	NA	aaa-Trifluorotoluene-FID	119	% Recovery	1	NA		04/06/01
X01117	XG.2001.400-4	NA	aaa-Trifluorotoluene-PID	ND	% Recovery	1	NA		04/06/01
0103365-05B		DRO							X01119-004
X01119	XG.2001.393-8	NA	O-terphenyl	95	% Recovery	1	NA		04/05/01
0103365-05C		8260							X01108-002
X01108	XG.2001.371-2	NA	1,2 Dichloroethane-D4 (SS)	96	% Recovery	1	NA		03/30/01
X01108	XG.2001.371-2	NA	4-Bromofluorobenzene (SS)	98	% Recovery	1	NA		03/30/01
X01108	XG.2001.371-2	NA	Dibromofluoromethane (SS)	102	% Recovery	1	NA		03/30/01
X01108	XG.2001.371-2	NA	Toluene-D8 (SS)	102	% Recovery	1	NA		03/30/01
0103365-05D		8270							X0199-021
X0199	XG.2001.374-2	NA	*2,4,6-TRIBROMOPHENOL	82	% Recovery	1	NA		03/30/01
X0199	XG.2001.374-2	NA	*2-FLUOROBIPHENYL	88	% Recovery	1	NA		03/30/01
X0199	XG.2001.374-2	NA	*2-FLUOROPHENOL	47	% Recovery	1	NA		03/30/01
X0199	XG.2001.374-2	NA	*NITROBENZENE-D5	84	% Recovery	1	NA		03/30/01
X0199	XG.2001.374-2	NA	*PHENOL-D6	35	% Recovery	1	NA		03/30/01
X0199	XG.2001.374-2	NA	*TERPHENYL-D14	86	% Recovery	1	NA		03/30/01

Client Sample ID: **TRIP BLANK** Sample Matrix: **H2O**

QC Group	Run Sequence	CAS #	Analyte	Result	Units	Dilution Factor	Detection Limit	Code	Run Date
[illegible]65-06A		8260							X01108-003
X[illegible]08	XG.2001.371-3	NA	1,2 Dichloroethane-D4 (SS)	99	% Recovery	1	NA		03/30/01

Surrogate Summary: Fraction

Client: **CH2MHILL**

Project: **0103365** **160660.02.FF.SA**

X01108	XG.2001.371-3	NA	4-Bromofluorobenzene (SS)	100	% Recovery	1	NA	03/30/01
X01108	XG.2001.371-3	NA	Dibromofluoromethane (SS)	103	% Recovery	1	NA	03/30/01
X01108	XG.2001.371-3	NA	Toluene-D8 (SS)	102	% Recovery	1	NA	03/30/01

A[illegible]IGAI ANALYTICAL LABORATORIES, INC.

Chain of Cust[illegible]dy Record

7300 JEFFERSON N.E.
ALBUQUERQUE, NEW MEXICO 87[illegible]
(505) 345-8964

3332 WEDGEWOOD
EL PASO, TEXAS 79925
(915) 593-6000

127 EASTGATE DRIVE, 212-C
LOS ALAMOS, NEW MEXICO 87544
(505) 662-2558

Lab job No.: 0103365 Date 3-25-01

Page 1 of 1

Client CH2M HILL

Address 6301 INDIAN SCHOOL RD #350

City / State / Zip ABQ NM 87110

Project Name / Number KAFB TO-10

Contract / Purchase Order / Quote

Project Manager / Contact HALLORAN / LEFEVRE

Telephone No. 884-5600

Fax No. 883-7507

Samplers: (signature) WM LEFEVRE

Analysis Required

AAL Fraction Number	Field Sample Number / Location	Date	Time	Sample Type	Type / Size of Container	Preservation Temp.	Preservation Chemical	No. of Containers	GRO	DRO	VOC	SVOC						Remarks
[illegible]	ST106 SB34 110'	3-24	1448	Soil	4oz glass	ICE	—	2	X	X								
[illegible]	ST106 SB34 130'	3-25	0800	Soil	4oz glass	ICE	—	3	X	X	X							
[illegible]	ST106 SB34 140'	3-25	0840	Soil	4oz glass	ICE	—	2	X	X								
[illegible]	ST106 SB34 150'	3-25	0945	Soil	4oz glass	ICE	—	2	X	X								
[illegible]	EQUIP BLANK	3-25	1010	H_2O	40ml VOA / 1L AMBER	ICE	HCL / NON	8	X	X	X	X						
[illegible]	TRIP BLANK	3-25	1030	H_2O	40ml VOA	ICE	HCL	2			X							

Relinquished by:	Date	Received by:	Relinquished by:	Date	Received by:
Signature [illegible]	3-27-01	Signature [illegible]	Signature		Signature
Printed [illegible] LeFevre	3-25-01	Printed A. BRAZIL	Printed		Printed
Company CH2M HILL	Time 11:22	Company AAL	Company	Time	Company
Reason [illegible] Lab		Reason [illegible]	Reason		Reason

Method of Shipment:

Shipment No.

Special Instructions:

Comments: ~~24 hr TAT~~

24 hr TAT on Soil-TPH

After analysis, samples are to be:

- ❑ Disposed of (additional fee)
- ❑ Stored (30 days max)
- ❑ Stored over 30 days (additional fee)
- ❑ Returned to customer

COURIER

Appendix D

Appendix D

Validation Report

The validation report will be provided at a later date.

Appendix E

Appendix E

JP4 and JP8 Chemical Compositions

Individual Sample Fuel Mixture Composition Data

fuel mixture : **JP-4 Fuel Oil**

sample # : **44/JP-4**

from : **Wright Patterson Air Force Base, ,**

compound class	carbon #	compound	weight percent	number of data points	flag(s)
Alkyl-Monoaromatics	6	Benzene	4.7E-01%	106	20
	7	Toluene	1.6E+00%	106	20
	8	Ethylbenzene	6.9E-01%	10	20
	9	1-Ethyl-3-methylbenzene	5.7E-01%	105	20
Branched Alkanes	5	2-Methylbutane	5.9E-01%	106	20
	6	2,2-Dimethylbutane	1.3E-01%	95	20
	6	2-Methylpentane	1.5E+00%	106	20
	6	3-Methylpentane	1.1E+00%	106	20
	7	2,3-Dimethylpentane	6.2E-01%	106	20
	7	2-Methylhexane	1.3E+00%	106	20
	7	3,3-Dimethylpentane	9.4E-02%	106	20
	7	3-Ethylpentane	1.4E-01%	106	20
	7	3-Methylhexane	1.5E+00%	106	20
	8	2,2,3,3-Tetramethylbutane	5.8E-01%	106	20
	9	3-Ethylheptane	1.1E-01%	94	20
Cycloalkanes	6	Cyclohexane	1.2E+00%	106	20
	6	Methylcyclopentane	1.4E+00%	106	20
	7	cis-1,3-Dimethylcyclopentane	4.2E-01%	106	20
	7	Ethylcyclopentane	2.6E-01%	106	20
	7	Methylcyclohexane	2.8E+00%	106	20
	7	trans-1,2-Dimethylcyclopentane	7.4E-01%	106	20
	7	trans-1,3-Dimethylcyclopentane	4.5E-01%	106	20
n-Alkanes	4	n-Butane	1.7E-01%	92	20
	5	n-Pentane	9.2E-01%	106	20
	6	n-Hexane	2.4E+00%	106	20
	7	n-Heptane	2.8E+00%	106	20
	8	n-Octane	2.2E+00%	106	20
	9	n-Nonane	1.9E+00%	106	20
	10	n-Decane	1.6E+00%	106	20
	11	n-Undecane	1.5E+00%	106	20
	12	n-Dodecane	1.0E+00%	104	20
	13	n-Tridecane	8.2E-01%	102	20
	15	n-Pentadecane	1.9E-01%	95	20
	16	n-Hexadecane	7.3E-02%	76	20
Naphthalenes	10	Naphthalene	2.5E-01%	90	20
	11	1-Methylnaphthalene	3.3E-02%	92	20
	11	2-Methylnaphthalene	1.4E-01%	100	20

flag(s)

20 Data was converted using formula WT%=mg/mL*0.10*(1/0.8762).

Individual Sample Fuel Mixture Composition Data

fuel mixture : **JP-8 Fuel Oil**

sample # : **43/JP-8 Fuel**

from : **Smith, J.H., et.al., Department of the Air Force, Final report #ESL-TR-81-54; pp.1-50; National Technical Information Services, Springfield, VA, NTIS #AD A115949/LP, 1981**

compound class	carbon #	compound	weight percent	number of data points	flag
Alkenes	13	Tridecene	7.3E-01 %	1	21
Alkyl-Monoaromatics	8	m-Xylene	6.0E-02 %	1	21
	8	o-Xylene	6.0E-02 %	1	21
	9	1,2,3-Trimethylbenzene	2.7E-01 %	1	21
	10	1,2,3,4-Tetramethylbenzene	1.1E+00 %	1	21
	10	1,3-Dimethyl-5-ethylbenzene	6.2E-01 %	1	21
	10	1-Methyl-2-isopropylbenzene	5.6E-01 %	1	21
	12	1,2,4-Triethylbenzene	9.9E-01 %	1	21
	12	1,3,5-Triethylbenzene	6.0E-01 %	1	21
	13	n-Heptylbenzene	2.5E-01 %	1	21
	14	n-Octylbenzene	6.1E-01 %	1	21
	15	1-Ethylpropylbenzene	9.9E-01 %	1	21
Branched Alkanes	9	3-Methyloctane	4.0E-02 %	1	21
	10	2,4,6-Trimethylheptane	7.0E-02 %	1	21
	11	2-Methyldecane	4.1E-01 %	1	21
	12	2,6-Dimethyldecane	6.6E-01 %	1	21
	12	2-Methylundecane	1.2E+00 %	1	21
	13	2,6-Dimethylundecane	2.1E+00 %	1	21
Cycloalkanes	9	1,1,3-Trimethylcyclohexane	6.0E-02 %	1	21
	9	1,3,5-Trimethylcyclohexane	6.0E-02 %	1	21
	9	1-Methyl-4-ethylcyclohexane	1.0E-01 %	1	21
	9	Propylcyclohexane	1.4E-01 %	1	21
	10	n-Butylcyclohexane	7.4E-01 %	1	21
	12	Hexylcyclohexane	9.3E-01 %	1	21
	12	Phenylcyclohexane	8.7E-01 %	1	21
	13	Heptylcyclohexane	1.0E+00 %	1	21
Diaromatics (Except Naphthalenes)	12	Biphenyl	6.3E-01 %	1	21
n-Alkanes	7	n-Heptane	3.0E-02 %	1	21
	8	n-Octane	9.0E-02 %	1	21
	9	n-Nonane	3.1E-01 %	1	21
	10	n-Decane	1.3E+00 %	1	21
	11	n-Undecane	4.1E+00 %	1	21
	12	n-Dodecane	4.7E+00 %	1	21
	13	n-Tridecane	4.4E+00 %	1	21
	14	n-Tetradecane	3.0E+00 %	1	21

	15	n-Pentadecane	1.6E+00 %	1	21
	16	n-Hexadecane	4.5E-01 %	1	21
	17	n-Heptadecane	8.0E-02 %	1	21
	18	n-Octadecane	2.0E-02 %	1	21
Naphthalenes	10	Naphthalene	1.1E+00 %	1	21
	11	1-Methylnaphthalene	1.8E+00 %	1	21
Naphthalenes	11	2-Methylnaphthalene	1.5E+00 %	1	21
	12	1-Ethylnaphthalene	3.3E-01 %	1	21
	12	2,3-Dimethylnaphthalene	3.6E-01 %	1	21
	12	2,6-Dimethylnaphthalene	1.3E+00 %	1	21

flag(s)

21 no flag

DEPARTMENT OF THE AIR FORCE
377th Civil Engineer Squadron (AFMC)
CERTIFIED MAIL 7099 3220 0005 8924 4013
RETURN RECEIPT REQUESTED

ENTERED

25 May 01

MEMORANDUM FOR MS. MARCY LEAVITT, CHIEF
GROUNDWATER QUALITY BUREAU
NEW MEXICO ENVIRONMENT DEPARTMENT
PO BOX 26
SANTA FE, NM 87502

FROM: 377 ABW/EM
2050 Wyoming Blvd SE, Suite 126
Kirtland AFB NM 87117-5270

SUBJECT: Stage I Abatement Plan for the Bulk Fuels Facility, Kirtland AFB

1. We have completed the report for the subject plan and have submitted one copy with appendices to Mr. Baird Swanson of your staff. Project management was transferred from Ms. Jennifer Parker to Mr. Swanson.

2. Please contact Mr. Mark Holmes at 505-846-9005 or me at 505-846-9122, if you have any questions on this matter.

CHRISTOPHER B. DEWITT, GS-13
Chief, Restoration Program Section
377th Civil Engineer Squadron

cc:
NMED-HWB (Mr. Kieling) w/ report w/o appendices
EPA Region 6 (Ms. Tellez) w/ report w/ appendices
HQ AFMC/CEVC (Mr. Fort) w/o report
AFCEE (Mr. Arnold) w/o report
CH2MHILL (Ms. Minchak) w/o report
377 ABW/EMC (Mr. Montano) w/o report

KAFB2272